INDEX OF SHEETS
(SEE SHEET 2)

TRAFFIC DATA		
CONSTRUCTION YEAR = 2011		
DESIGN YEAR = 2031		
DESIGN SPEED = 50 KPH		
	US 2 SECTION #1	US 2 SECTION #2
AADT 2011	6300	6900
AADT 2031	7800	8600
DHV 2001	710	770
DHV 2031	870	960
ADTT 2001	720	590
ADTT 2031	1300	1100
%T 2001	9	7
%T 2031	13	10
%D 2011	52	58
%D 2031	52	58
ESALs 2011~2031	4,816,000	4,732,000
ESALs 2011~2051	11,411,000	11,269,000

TRAFFIC SECTION #1: US 2 FROM BEGIN PROJECT TO THE INTERSECTION OF US2/TH2/TH3

TRAFFIC SECTION #2: US 2 FROM THE INTERSECTION OF US2/TH2/TH3 TO END OF PROJECT

BITUMINOUS CONCRETE PAVEMENT SUPERPAVE MIXTURE DESIGN CRITERIA	
DESIGN LANE/DESIGN LIFE ESALS	2,408,000
DESIGN NUMBER OF GYRATIONS	65

STATE OF VERMONT
AGENCY OF TRANSPORTATION

PROPOSED IMPROVEMENT
TOWN OF DANVILLE
COUNTY OF CALEDONIA
U.S. ROUTE 2
PRINCIPAL ARTERIAL

BEGINNING AT A POINT, ON U.S. ROUTE 2, IN THE TOWN OF DANVILLE, APPROXIMATELY 6.518 KILOMETERS EAST OF THE CABOT-DANVILLE TOWN LINE AND EXTENDING EASTERLY APPROXIMATELY 1.155 KILOMETERS.

LENGTH OF ROADWAY	1154.778m
LENGTH OF PROJECT	1154.778m

WORK TO BE PERFORMED UNDER THIS PROJECT INCLUDES GRADING, DRAINAGE, SUBBASE, PAVEMENT, TRAFFIC SIGNAL, STREET LIGHTING, LANDSCAPING, WATERLINE CONSTRUCTION, UTILITY RELOCATION AND OTHER ENHANCEMENTS FOR A STATE HIGHWAY GENERALLY ALONG EXISTING ALIGNMENT.

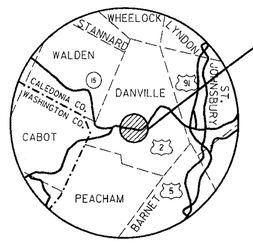

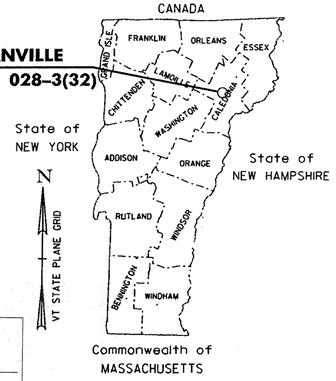

RECORD PLANS

CONTRACTOR: PIKE INDUSTRIES, INC. – BERLIN, VT

RESIDENT ENGINEER: ERIC FOSTER

CONSTRUCTION BEGAN: MAY 16, 2011

CONSTRUCTION COMPLETE: NOVEMBER 18, 2014

RECORD PLANS BY: ERIC FOSTER & CRAIG PIERCE

I HEREBY CERTIFY THAT ALL THE CONSTRUCTION REQUIRED BY THIS SET OF DRAWINGS HAS BEEN ACCOMPLISHED AS INDICATED HEREIN.

BY Eric Foster RESIDENT ENGINEER

DATE 6.17.15

NOTE: Any further information concerning final quantities, amounts or other details relative to this project may be found by contacting Vtrans Records Management.

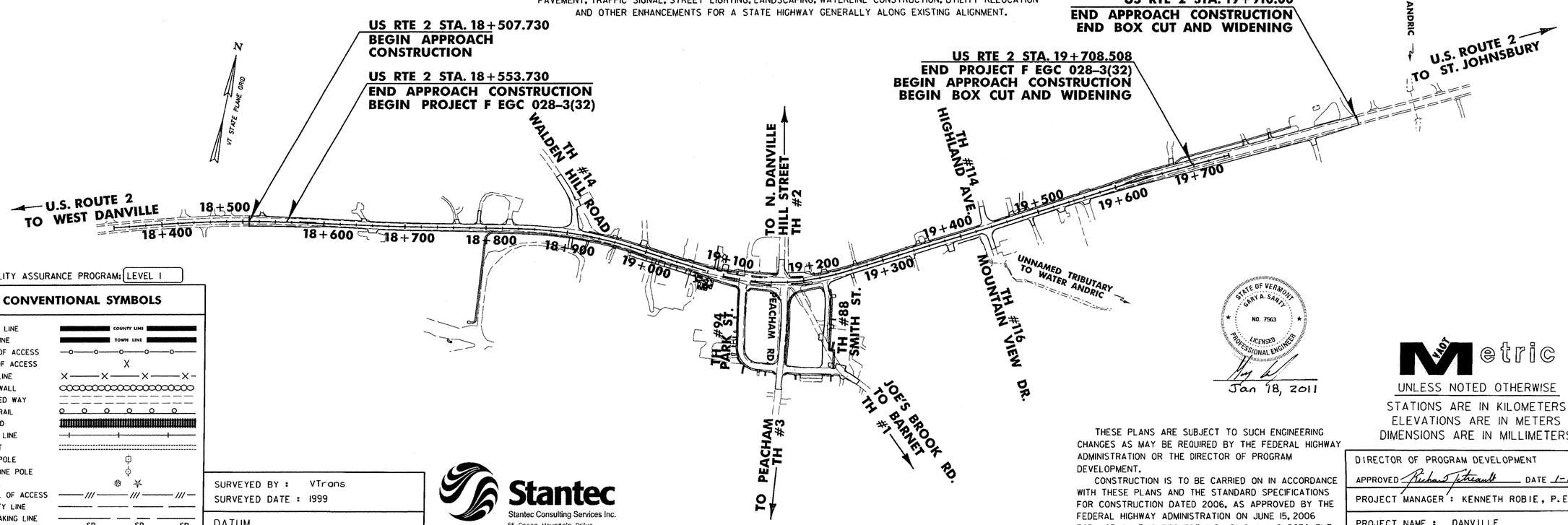

QUALITY ASSURANCE PROGRAM: LEVEL I

CONVENTIONAL SYMBOLS

COUNTY LINE
TOWN LINE
LIMITS OF ACCESS
POINT OF ACCESS
FENCE LINE
STONE WALL
TRAVELED WAY
GUARD RAIL
RAILROAD
SURVEY LINE
CULVERT
POWER POLE
TELEPHONE POLE
TREES
CONTROL OF ACCESS
PROPERTY LINE
R.O.W. TAKING LINE
SLOPE RIGHTS SR SR SR
TOP OF CUT
TOE OF SLOPE

SURVEYED BY : VTrans
SURVEYED DATE : 1999

DATUM
VERTICAL NAVD88
HORIZONTAL NAD83(92)

Stantec
Stantec Consulting Services Inc.
55 Green Mountain Drive
South Burlington VT U.S.A. 05403
Tel. 802.864.0223
Fax. 802.864.0165
www.stantec.com

STATE OF VERMONT
GARY A. SANTY
NO. 7563
LICENSED PROFESSIONAL ENGINEER
Jan 18, 2011

THESE PLANS ARE SUBJECT TO SUCH ENGINEERING CHANGES AS MAY BE REQUIRED BY THE FEDERAL HIGHWAY ADMINISTRATION OR THE DIRECTOR OF PROGRAM DEVELOPMENT.

CONSTRUCTION IS TO BE CARRIED ON IN ACCORDANCE WITH THESE PLANS AND THE STANDARD SPECIFICATIONS FOR CONSTRUCTION DATED 2006, AS APPROVED BY THE FEDERAL HIGHWAY ADMINISTRATION ON JUNE 15, 2006 FOR USE ON THIS PROJECT, INCLUDING ALL SUBSEQUENT REVISIONS AND SUCH REVISED SPECIFICATIONS AND SPECIAL PROVISIONS AS ARE INCORPORATED IN THESE PLANS.

VAOT Metric

UNLESS NOTED OTHERWISE
STATIONS ARE IN KILOMETERS
ELEVATIONS ARE IN METERS
DIMENSIONS ARE IN MILLIMETERS

DIRECTOR OF PROGRAM DEVELOPMENT
APPROVED Richard Tetreault DATE 1-19-11

PROJECT MANAGER : KENNETH ROBIE, P.E.

PROJECT NAME : DANVILLE
PROJECT NUMBER : F EGC 028-3(32)

SHEET 1 OF 306 SHEETS

1/18/2011 11:58:59 PM v:\1953\active\19530033_0192\Highway\PlotFiles\001 1Hw.prf

VDOT Metric

INDEX OF SHEETS

SHEET NUMBER	TITLE	SHEET NUMBER
1	TITLE SHEET	-
2	INDEX OF SHEETS	IND-1
3 - 7	TYPICAL SECTION	TS-1 TO TS-5
8 - 15	QUANTITY SHEETS	QS-1 TO QS-8
16	ITEM DETAIL SHEET	IDS-1
17 - 19	DRAINAGE DETAIL SHEETS	DDS-1 TO DDS-3
20	EARTHWORK SUMMARY SHEET	EWS-1
21 - 32	RIGHT OF WAY DETAIL SHEETS	RDS-1 TO RDS-12
33 - 43	RIGHT OF WAY PLAN SHEETS	RPS-1 TO RPS-11
44 - 48	TIE SHEETS	TIE-1 TO TIE 5
49 - 59	ALIGNMENT/CURBLINE PLAN SHEETS	ALC-1 TO ALC-11
60 - 61	ISLAND DETAIL SHEETS	ISDS-1 TO ISDS-2
62 - 73	CONSTRUCTION PLAN SHEETS	CP-1 TO CP-11
74 - 88	ROADWAY PROFILE SHEETS	PRO-1 TO PRO-15
89 - 90	GRADING PLAN SHEETS	GP-1 TO GP-2
91	DRIVE DETAIL SHEET	DRD-1
92 - 99	DRAINAGE PROFILE SHEETS	DPRO-1 TO DPRO-8
100	DRAINAGE DETAIL SHEET	DD-1
101 - 103	STORMWATER MANAGEMENT DETAIL SHEETS	SWM-1 TO SWM-3
104	EPSC PHASING PLAN SHEET	EPH-1
105 - 106	EPSC NARRATIVE SHEETS	ENR-1 TO ENR-2
107 - 117	EPSC PRE-CONSTRUCTION PLAN SHEETS	EPR-1 TO EPR-11
118 - 128	EPSC CONSTRUCTION PLAN SHEETS	ECN-1 TO ECN-11
129 - 139	EPSC STABILIZATION PLAN SHEETS	EST-1 TO EST-11
140 - 144	EPSC DETAIL SHEETS	EDS-1 TO EDS-5
145 - 155	SIGNING AND PAVEMENT MARKING PLAN SHEETS	SP-1 TO SP-10
156 - 164	TRAFFIC SIGN SUMMARY SHEETS	TSS-1 TO TSS-9
165 - 166	SIGNING DETAIL SHEETS	SGD-1 TO SGD-2
167 - 170	TRAFFIC SIGNAL DETAIL SHEETS	TSD-1 TO TSD-4
171 - 173	MAST ARM DETAIL SHEETS	MAD-1 TO MAD-3
174 - 175	LANDSCAPING GENERAL NOTES SHEET	LNS-1 TO LNS-2
176	TREE PROTECTION & REMOVAL PLAN	TPR-1
177 - 187	LANDSCAPE & LIGHTING PLAN SHEETS	LLP-1 TO LLP-11
188 - 194	LIGHTING DETAIL SHEETS	LTD-1 TO LTD-7
195 - 199	LANDSCAPE DETAIL SHEETS	LND-1 TO LND-5
200 - 204	ARTISTIC ENHANCEMENT PLAN SHEETS	AEP-1 TO AEP-5
205 - 207	BAND STAND PLAN SHEETS	BSP-1 TO BSP-3
208 - 212	UTILITY PLAN SHEETS	UP-1 TO UP-5
213 - 213A	UTILITY TYPICAL DUCT SECTIONS	DB-01 TO DB-02
214	UTILITY POLE RISER DETAIL SHEETS	RD-01
215 - 215F	DUCT BANK PROFILE SHEETS	DTP-01 TO DTP-07
215G - 215H	UTILITY DETAIL SHEETS	UD-1 TO UD-2
216	STRUCTURAL DETAILS SHEET	SD-1
217	CONSTRUCTION APPROACH SIGNING SHEET	CAS-1
218 - 224	TRAFFIC CONTROL PLAN SHEETS	TC-1 TO TC-7
225 - 263	US ROUTE 2 CROSS SECTIONS	MLX-1 TO MLX-39
264 - 266	WALDEN HILL ROAD CROSS SECTIONS	WHX-1 TO WHX-3
267 - 273	PARK STREET CROSS SECTIONS	PSX-1 TO PSX-7
274	HILL STREET CROSS SECTIONS	HSX-1
275 - 280	PEACHAM ROAD CROSS SECTIONS	PRX-1 TO PRX-6
281 - 287	SMITH STREET CROSS SECTIONS	SSX-1 TO SSX-7
288	HIGHLAND AVENUE CROSS SECTIONS	HAX-1
289	MOUNTAIN VIEW DRIVE CROSS SECTIONS	MVX-1
290 - 301	FIRE DISTRICT WATER PLAN SHEETS	FD-1 TO FD-12
302 - 305	FIRE DISTRICT WATER DETAIL SHEETS	FD-13 TO FD-16
306	FIRE DISTRICT SOIL BORINGS	FD-17

INDEX OF STANDARDS

SHEET NUMBER	SHEET NAME	REVISION DATE
B-5	SLOPE GRADING, EMBANKMENTS, MUCK	06-01-94
B-12	SIDE ROAD INTERSECTION, DEPRESSED RAMP	06-01-94
B-71	STANDARD FOR RESIDENTIAL AND COMMERCIAL DRIVES	07-08-05
C-2A	PORTLAND CEMENT CONCRETE SIDEWALK DRIVE ENTRANCES WITH SIDEWALK ADJACENT TO CURB	10-14-05
C-2B	PORTLAND CEMENT CONCRETE SIDEWALK DRIVE ENTRANCES WITH SIDEWALK AND GREEN STRIP	10-14-05
C-3A	SIDEWALK RAMPS	03-10-08
C-3B	SIDEWALK RAMPS AND MEDIAN ISLANDS	03-10-08
C-10	CURBING	02-11-08
D-3	TREATED GUTTERS	06-01-94
D-4	VARIOUS DRAINAGE DETAILS	08-13-07
D-11	STEEL OR IRON GRATES& COVERS (TYPE A)	06-01-94
D-15	PRECAST REINF CONC. MH-GRATES, CAST IRON GRATE WITH FRAME, TYPE D & E	06-01-94
D-16	DRAINAGE DETAILS INCLUDING DROP INLETS, IRON GRATE TYPE B&C, CONC END SECTIONS. ETC.	06-01-94
D-20	HIGHWAY CROSSING FOR UNDERGROUND UTILITIES	03-03-03
D-30	UNDERDRAIN CONSTRUCTION DETAILS	08-13-07
D-33	REINFORCED CONCRETE STRAIGHT HEADWALL	03-12-07
E-100	CONSTRUCTION APPROACH SIGNS	01-02-04
E-100A	SIDE ROAD CONSTRUCTION - APPROACH SIGNS	01-02-04
E-101	CONSTRUCTION SIGN DETAILS	05-30-03
E-102	CONSTRUCTION SIGN DETAILS	06-30-03
E-102A	CONSTRUCTION SIGN DETAILS	05-01-04
E-103	MAINLINE TRAFFIC CONTROL DIVIDED HIGHWAY ONE LANE CLOSED	03-01-04
E-106	TRAFFIC CONTROL- MISCELLANEOUS DETAILS	03-01-04
E-107	DELINEATION, BARRICADES AND DETOURS FOR CONSTRUCTION AREAS	06-30-03
E-107A	BREAKAWAY BARRICADE DETAILS	06-08-09
E-108	CONSTRUCTION ZONE LONGITUDINAL DROP OFFS	06-08-09
E-110	MAJOR MAINTENANCE OPERATION LANE CLOSURE	08-08-95
E-111	MINOR MAINTENANCE OPERATIONS	03-11-97
E-121	STANDARD SIGN PLACEMENT - CONVENTIONAL ROAD	08-08-95
E-123	GUIDE SIGN PLACEMENT - MISCELLANEOUS DETAILS	03-16-04
E-125	TRAVEL INFORMATION SIGNS	08-08-95
E-138	MILE MARKER DETAILS - STATE & TOWN HIGHWAYS	05-30-03
E-140	REGULATORY SIGN DETAILS	08-30-96
E-141	REGULATORY SIGN DETAILS	09-20-95
E-142	REGULATORY SIGN DETAILS	09-20-95
E-143	REGULATORY SIGN DETAILS	06-15-04
E-144	REGULATORY SIGN DETAILS	03-29-99
E-145A	REGULATORY SIGN DETAILS - LANE USE CONTROL SIGNS	12-23-94
E-146	REGULATORY SIGN DETAILS	09-20-95
E-151	WARNING SIGN DETAILS	05-01-04
E-152	WARNING SIGN DETAILS	05-01-04
E-153	WARNING SIGN DETAILS	05-01-04
E-154	WARNING SIGN DETAILS	05-01-04
E-155	WARNING SIGN DETAILS	05-01-04
E-160	FLANGED CHANNEL STEEL SIGN POST	05-20-99
E-161	W-SHAPED STEEL SIGN POST	08-18-95
E-164	SQUARE STEEL SIGN POST	06-08-09
E-170	TRAFFIC CONTROL SIGNALS PEDESTAL POST MOUNTED	11-04-99
E-171A	TRAFFIC CONTROL SIGNALS GENERAL NOTES & DETAILS	08-09-95
E-171B	TRAFFIC CONTROL SIGNALS MISC. DETAILS	08-09-95
E-171C	TRAFFIC CONTROL SIGNALS CANTILEVER MOUNTING DETAILS	08-09-95
E-172	VEHICLE DETECTOR LOOP DETAILS	08-09-95
E-173	PULL BOXES AND JUNCTION BOXES	08-09-95
E-175	POWER DROP STANCHIONS	06-08-09
E-180A	STREET LIGHTING DETAILS	08-09-95
E-180B	STREET LIGHTING DETAILS	08-09-95
E-181	TYPICAL BRIDGE MOUNTING DETAILS FOR STREET LIGHT POLE	08-09-95
E-191	PAVEMENT MARKING DETAILS	02-01-99
E-192	PAVEMENT MARKING DETAILS	10-12-00
E-193	PAVEMENT MARKING DETAILS	08-18-95
E-198	DELINEATORS AND MILE POSTS	04-01-05
F-2	CHAIN LINK FENCE, TYPE I DETAILS	06-01-94
F-6	CHAIN LINK SCREENING FENCE TYPE I & II DETAILS	06-01-94
J-1	PROJECT AND BOUNDARY MARKERS	06-01-94
J-2	CONCRETE STEPS-HAND RAILING	06-01-94
J-3	MAIL BOX SUPPORT DETAILS	08-07-95

REPLACEMENT SHEETS ISSUED 02/24/2012

Stantec

PROJECT NAME: DANVILLE
PROJECT NUMBER: F EGC 028-3(32)

FILE NAME: ...\Plotfiles\002 Index.ptf
DESIGN SUPERVISOR: GARY SANTY
DESIGNED BY: STANTEC
INDEX OF SHEETS IND-1

PLOT DATE: 2/24/2012
DRAWN BY: STANTEC
CHECKED BY: STANTEC
SHEET 2 OF 306

2/24/2012 4:36:34 PM V:\1953\active\95330033.0092\Highway\Plotfiles\002 Index.ptf

TYPICAL SECTIONS

100 mm SUPERPAVE BITUMINOUS CONCRETE PAVEMENT, TYPE IIIS, (2 LIFTS - 50 MM PER LIFT)-WEARING COURSE
150 mm SUPERPAVE BITUMINOUS CONCRETE PAVEMENT, TYPE IIS, (2 LIFTS - 75 MM PER LIFT)-BASE COURSE
600 mm SUBBASE OF DENSE GRADED CRUSHED STONE

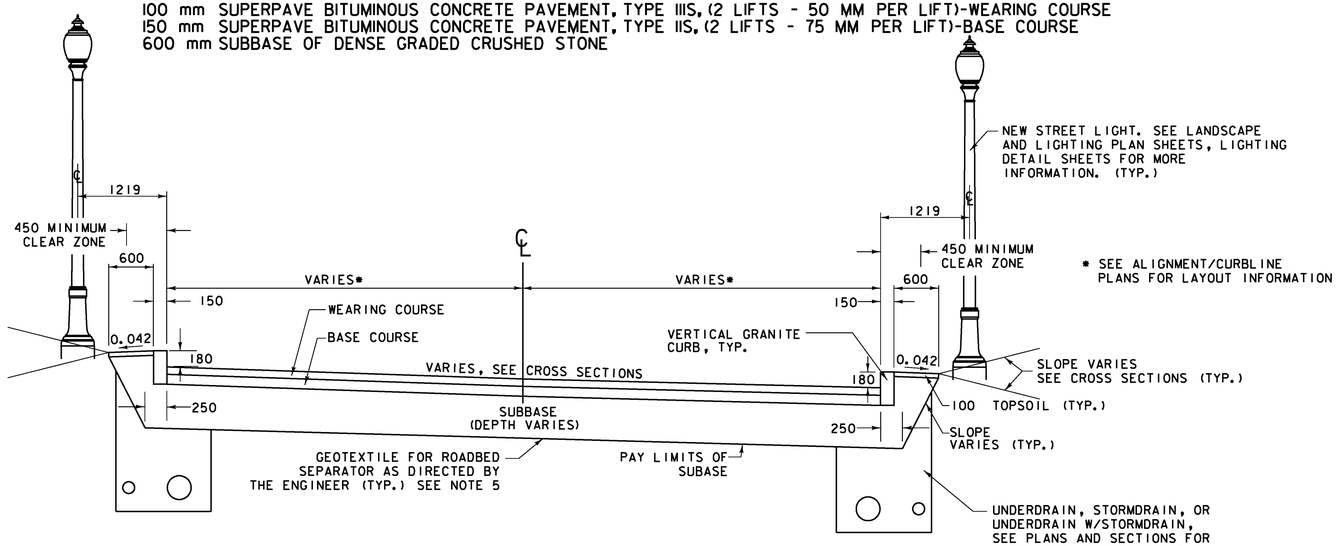

U.S. ROUTE 2
APPROACH SECTION - CURBED

NOT TO SCALE
SEE US ROUTE 2 APPROACH CONSTRUCTION DETAIL ON SHEET TS-3 FOR COLD PLANING LENGTHS AND SUBBASE TRANSITION DETAILS

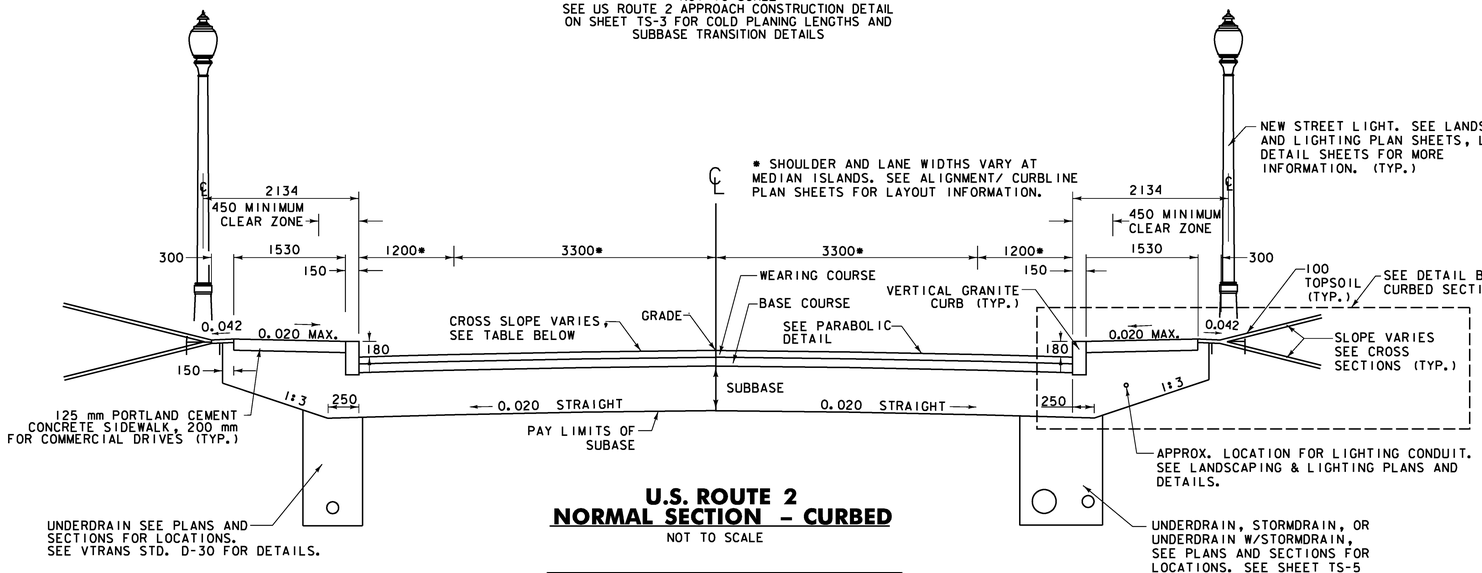

U.S. ROUTE 2
NORMAL SECTION - CURBED

NOT TO SCALE

LEFT LANE CROSS SLOPE		
STA. TO STA.		NOTES
18+553.73	18+600	e=+0.020
18+600	18+640	e VARIES, SEE BANKING DIAGRAM ON PROFILES
18+640	19+650	PARABOLIC (MODIFIED) DETAIL B

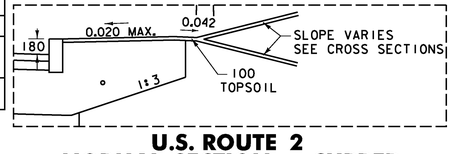

U.S. ROUTE 2
NORMAL SECTION - CURBED W/O SIDEWALK

NOT TO SCALE

MATERIAL TOLERANCES

MATERIAL	THICKNESS TOLERANCE
PAVEMENT	± 5 mm
SUBBASE	± 30 mm
SAND BORROW	± 30 mm

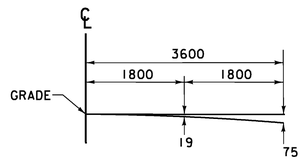

PARABOLIC DETAIL

NOT TO SCALE

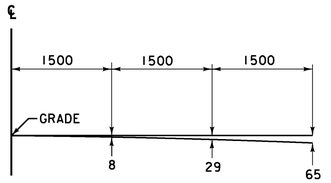

PARABOLIC (MODIFIED) DETAIL B

NOT TO SCALE

NOTES:

1. EMULSIFIED ASPHALT TO BE APPLIED ON EXISTING PAVEMENT BETWEEN ALL COURSES OF SUPERPAVE BITUMINOUS CONCRETE PAVEMENT AND ON COLD PLANED SURFACES, AT THE RATE OF 0.068 L/m² OR AS DIRECTED BY THE ENGINEER.
2. SEE ABOVE FOR MATERIAL TOLERANCES.
3. IT IS ANTICIPATED THAT LEDGE MAY BE ENCOUNTERED DURING EXCAVATION FOR ROADWAY (SEE CROSS-SECTIONS FOR ESTIMATED LEDGE LOCATIONS AS DETERMINED BY BORINGS). DRILLING AND BLASTING OF LEDGE SHALL BE PAID AS ITEM 205.20 DRILLING AND BLASTING OF SOLID ROCK SUBGRADE.
4. AN ESTIMATED QUANTITY OF GEOTEXTILE FOR ROADBED SEPARATOR (ITEM 649.11) IS INCLUDED IN THE CONTRACT. LOCATIONS OF USE TO BE DETERMINED BY THE ENGINEER.
5. EXCAVATION INCLUDING LEDGE AND BACKFILL FOR UNDERDRAIN, CARRIER PIPE, AND DRAINAGE PIPES WILL BE INCLUDED IN THE UNIT PRICE BID FOR THE APPROPRIATE PIPE OR UNDERDRAIN ITEM.

PROJECT NAME:	DANVILLE
PROJECT NUMBER:	F EGC 028-3(32)
FILE NAME: ...\PlotFiles\003-006 typ.ptf	PLOT DATE: 1/18/2011
DESIGN SUPERVISOR: GARY SANTY	DRAWN BY: STANTEC
DESIGNED BY: STANTEC	CHECKED BY: STANTEC
TYPICAL SECTION TS-1	SHEET 3 OF 306

1/18/2011 11:48:52 PM v:\1953\active\19530033.0192\Highway\PlotFiles\003-006 typ.ptf

TYPICAL SECTIONS

100 mm SUPERPAVE BITUMINOUS CONCRETE PAVEMENT, TYPE IIIS, (2 LIFTS - 50 MM PER LIFT)-WEARING COURSE
150 mm SUPERPAVE BITUMINOUS CONCRETE PAVEMENT, TYPE IIS, (2 LIFTS - 75 MM PER LIFT)-BASE COURSE
600 mm SUBBASE OF DENSE GRADED CRUSHED STONE

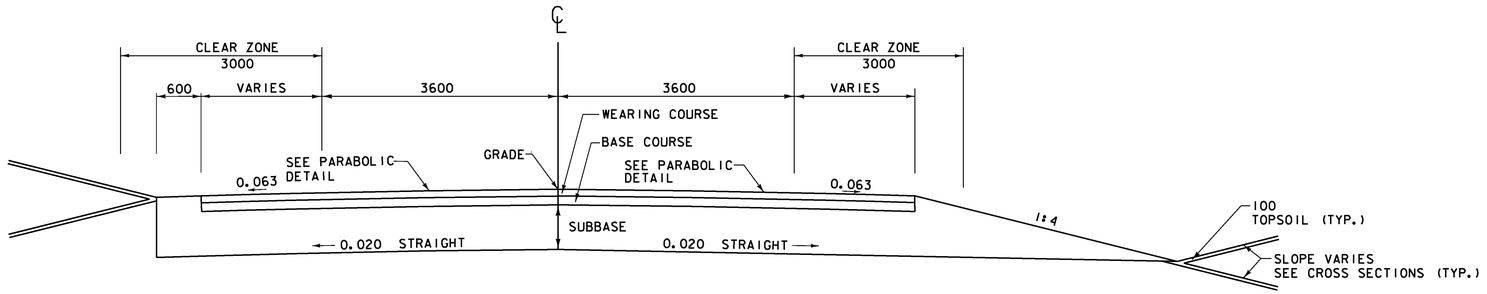

U.S. ROUTE 2
NORMAL SECTION – UNCURBED
NOT TO SCALE

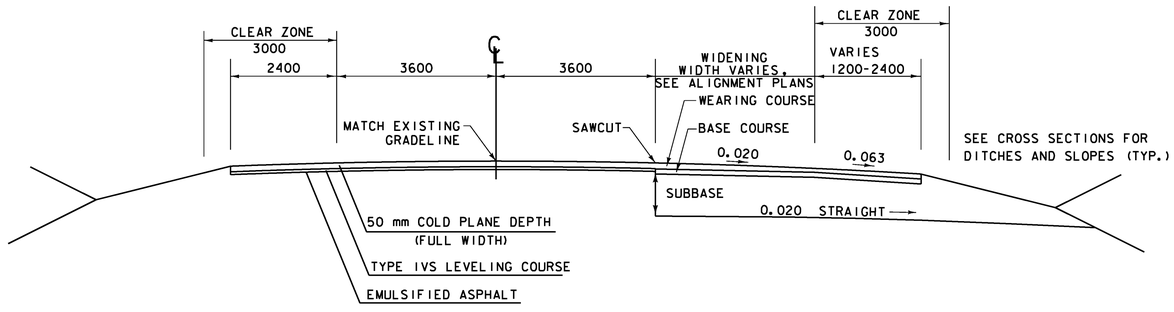

U.S. ROUTE 2
COLD PLANE – TURN LANE WIDENING TYPICAL

PAVEMENT, BASE COURSE AND SUBBASE
SAME AS U.S. ROUTE 2 FULL DEPTH CONSTRUCTION

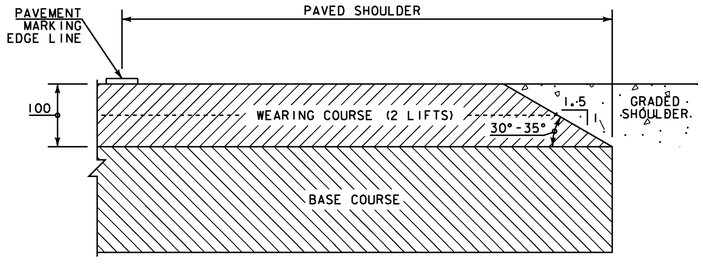

SAFETY EDGE DETAIL
NOT TO SCALE

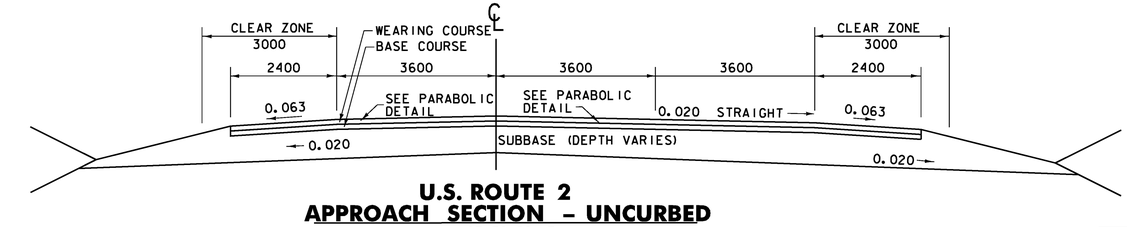

U.S. ROUTE 2
APPROACH SECTION – UNCURBED
NOT TO SCALE
SEE APPROACH CONSTRUCTION DETAIL ON TS-3

NOTES:
1. SEE TS-1 FOR MATERIAL TOLERANCES AND GENERAL NOTES.
2. SHOULDER AND ROADWAY WIDTHS VARY IN MEDIAN ISLAND LOCATION. SEE ALIGNMENT/ CURBLINE FOR LAYOUT INFORMATION

PROJECT NAME: DANVILLE	
PROJECT NUMBER: F EGC 028-3(32)	
FILE NAME: ...\PlotFiles\003-006 typ.ptf	PLOT DATE: 1/18/2011
DESIGN SUPERVISOR: GARY SANTY	DRAWN BY: STANTEC
DESIGNED BY: STANTEC	CHECKED BY: STANTEC
TYPICAL SECTION TS-2	SHEET 4 OF 306

Stantec

1/8/2011 1:48:53 PM v:\1853\active\195300033.092\highway\PlotFiles\003-006 typ.ptf

TYPICAL SECTIONS

VDOT Metric

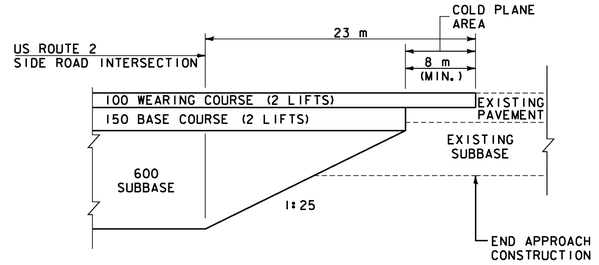

SIDE ROAD TO U.S. ROUTE 2 APPROACH CONSTRUCTION

NOT TO SCALE

(HILL STREET, HIGHLAND AVE., MOUNTAIN VIEW DRIVE)

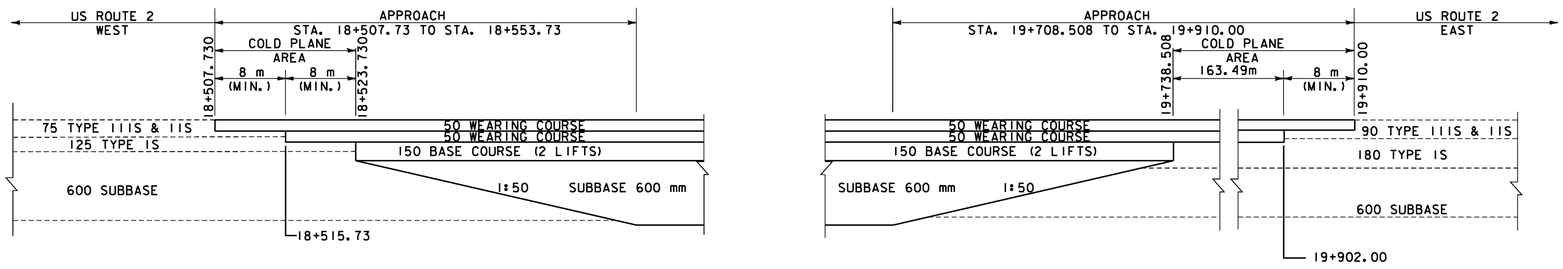

US ROUTE 2 APPROACH CONSTRUCTION

NOT TO SCALE

NOTES:

1. SEE TS-1 FOR MATERIAL TOLERANCES AND GENERAL NOTES.

PROJECT NAME:	DANVILLE
PROJECT NUMBER:	F EGC 028-3(32)

FILE NAME: ...\PlotFiles\003-006 typ.ptf	PLOT DATE: 1/18/2011
DESIGN SUPERVISOR: GARY SANTY	DRAWN BY: STANTEC
DESIGNED BY: STANTEC	CHECKED BY: STANTEC
TYPICAL SECTION TS-3	SHEET 5 OF 306

Stantec

1/18/2011 1:48:54 PM v:\9531active\95310033.0192\highway\PlotFiles\003-006 typ.ptf

TYPICAL SECTIONS

100 mm SUPERPAVE BITUMINOUS CONCRETE PAVEMENT, TYPE IIIS, (2 LIFTS - 50 MM PER LIFT) - WEARING COURSE
70 mm SUPERPAVE BITUMINOUS CONCRETE PAVEMENT, TYPE IIS, SINGLE LIFT - BASE COURSE
380 mm SUBBASE OF DENSE GRADED CRUSHED STONE

Metric

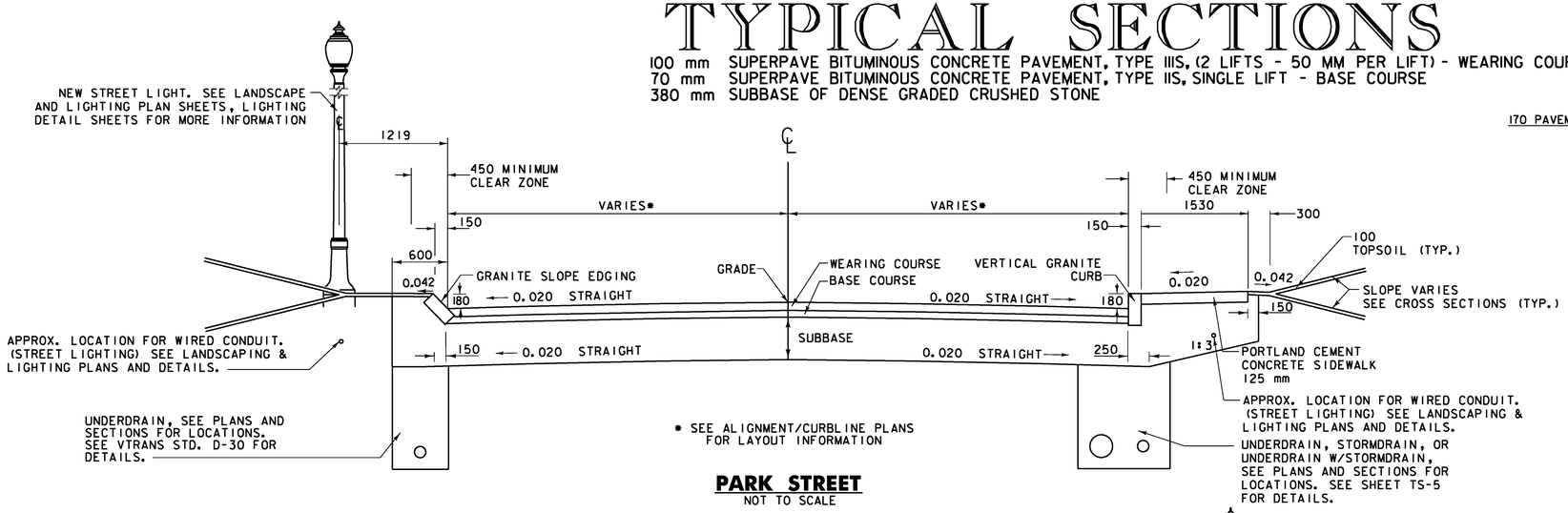

PARK STREET
NOT TO SCALE

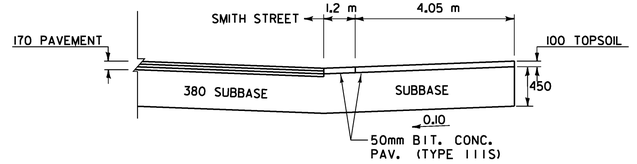

SMITH STREET - GREEN ACCESS
STA. 5+070.6 - 5+078.3 RT.
NOT TO SCALE

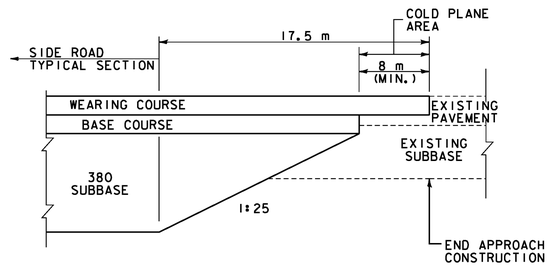

SIDE ROAD APPROACH CONSTRUCTION
NOT TO SCALE
(WALDEN HILL RD, PEACHAM RD, PARK ST)

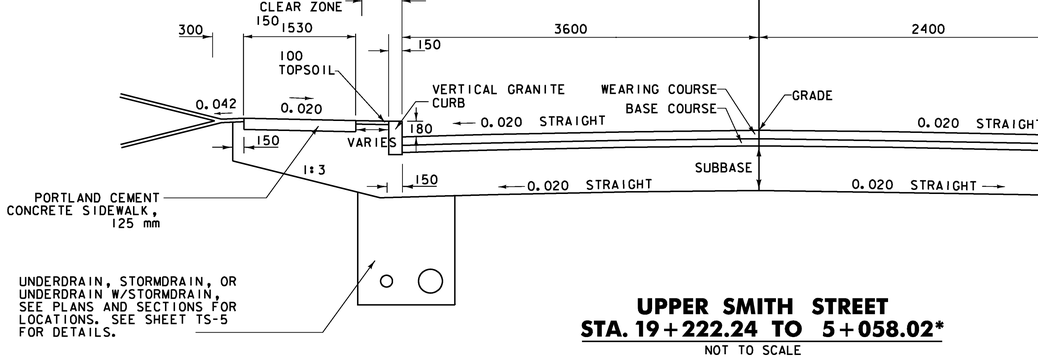

UPPER SMITH STREET
STA. 19+222.24 TO 5+058.02*
NOT TO SCALE

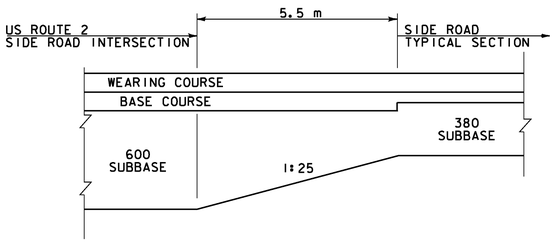

SIDE ROAD SUBBASE TRANSITION
NOT TO SCALE
(WALDEN HILL RD, PARK ST, PEACHAM RD, SMITH ST)

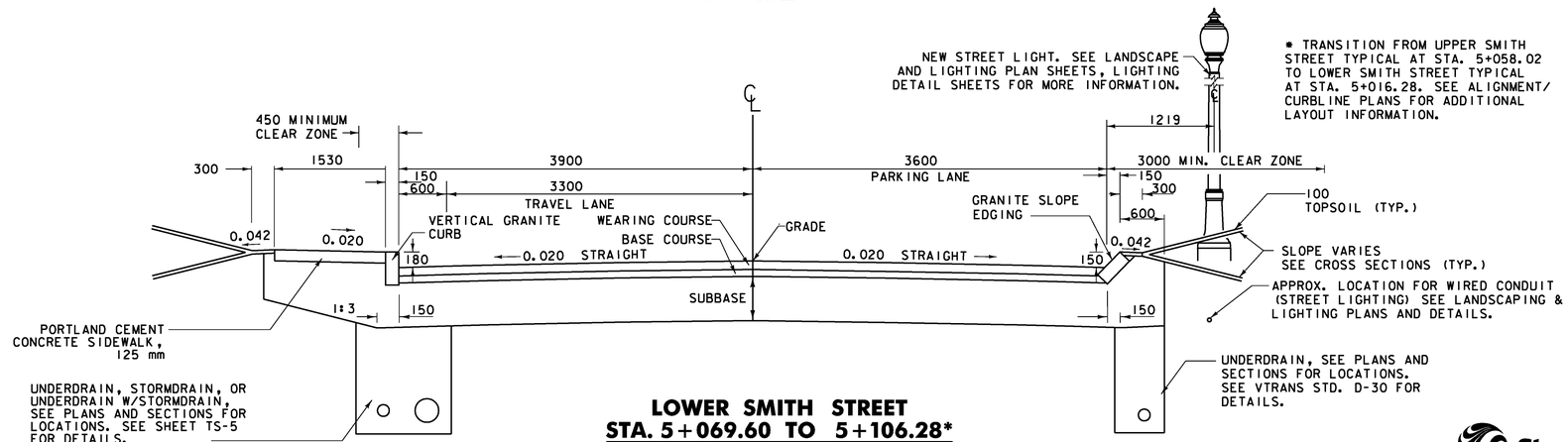

LOWER SMITH STREET
STA. 5+069.60 TO 5+106.28*
NOT TO SCALE

NOTES:
1. SEE TS-1 FOR MATERIAL TOLERANCES AND GENERAL NOTES.

PROJECT NAME:	DANVILLE
PROJECT NUMBER:	F EGC 028-3(32)

FILE NAME: ...\PlotFiles\003-006 typ.ptf	PLOT DATE: 1/18/2011
DESIGN SUPERVISOR: GARY SANTY	DRAWN BY: STANTEC
DESIGNED BY: STANTEC	CHECKED BY: STANTEC
TYPICAL SECTION TS-4	SHEET 6 OF 306

Stantec

1/8/2011 14:55 PM v:\1953\active\19530033.092\highway\PlotFiles\003-006 typ.ptf

TYPICAL SECTIONS

100 mm SUPERPAVE BITUMINOUS CONCRETE PAVEMENT, TYPE IIIS, (2 LIFTS - 50MM PER LIFT) - WEARING COURSE
70 mm SUPERPAVE BITUMINOUS CONCRETE PAVEMENT, TYPE IIS, (SINGLE LIFT) - BASE COURSE
380 mm SUBBASE OF DENSE GRADED CRUSHED STONE

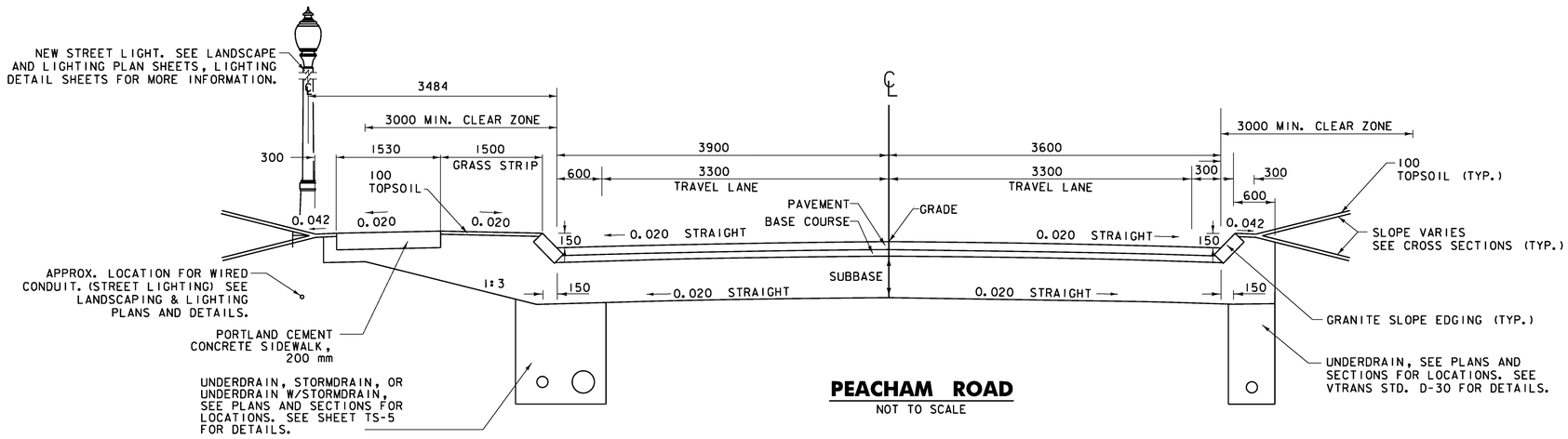

PEACHAM ROAD
NOT TO SCALE

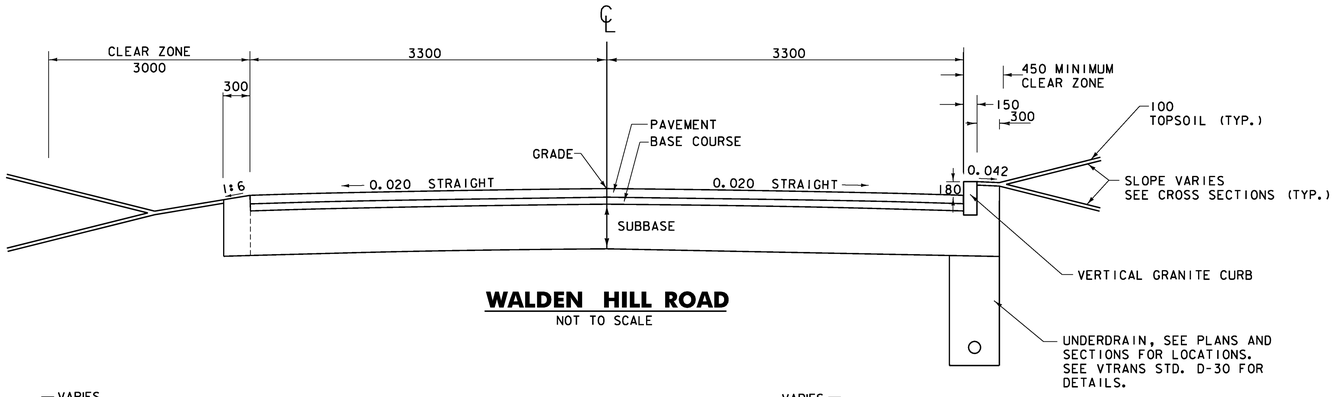

WALDEN HILL ROAD
NOT TO SCALE

UNDERDRAIN W/STORM DRAIN
NOT TO SCALE

RESIDENTIAL DRIVEWAY
NOT TO SCALE

COMMERCIAL DRIVEWAY
NOT TO SCALE

REPLACEMENT SHEETS ISSUED 02/24/2012

NOTES:

1. UNDERDRAIN OUT 15° & 90° ELBOWS TO BE PAID INCIDENTAL TO 605.95 UNDERDRAIN FLUSHING BASIN
2. SEE VTRANS STANDARD D-30 FOR DETAILS OF UNDERDRAIN FLUSHING BASINS.
3. SEE TS-1 FOR MATERIAL TOLERANCES AND GENERAL NOTES.
4. IN ALL LOCATIONS WHERE THE UNDERDRAIN AND DRAINAGE PIPE SHARE THE SAME TRENCH, THE CROWN ELEVATION OF THE UNDERDRAIN AND THE CROWN ELEVATION OF THE DRAINAGE PIPE SHALL BE EQUAL. ON THE SIDE OF THE ROAD WHERE THERE IS ONLY UNDERDRAIN, THE UNDERDRAIN INVERT ELEVATION SHALL BE SET TO 0.45 M BELOW THE BOTTOM OF SUBBASE.

PROJECT NAME:	DANVILLE
PROJECT NUMBER:	F EGC 028-3(32)
FILE NAME: ...\PlotFiles\003-006 typ.ptf	PLOT DATE: 2/24/2012
DESIGN SUPERVISOR: GARY SANTY	DRAWN BY: STANTEC
DESIGNED BY: STANTEC	CHECKED BY: STANTEC
TYPICAL SECTION TS-5	SHEET 7 OF 306

Stantec

2/24/2012 2:25:27 PM I:\1853\active\185300033.0092\Highway\PlotFiles\003-006 typ.ptf

STATE OF VERMONT
AGENCY OF TRANSPORTATION

QUANTITY SHEET 1

Metric

SUMMARY OF ESTIMATED QUANTITIES

ROADWAY	NON-PART.	TRAINING	LANDSCAPING	EPSC	ARTISTIC ENHANCE.	UTILITIES	FIRE DISTRICT	FULL C.E. ITEMS	GRAND TOTAL	FINAL
1									1	
22000									22000	
400									400	
80									80	
3800									3800	
300									300	
1						1			2	
30									30	
420									420	
3600									3600	
13600									13600	
50									50	
3750									3750	
1									1	
12300									12300	
1									1	
1									1	
505									505	
8									8	
3									3	
3									3	
3									3	
1									1	
1									1	
1									1	
1									1	
1									1	
2									2	
2									2	
79									79	
2									2	
80									80	

TOTALS

DESCRIPTIONS

UNIT	ITEMS	ITEM NUMBER	ROUND
LS	CLEARING AND GRUBBING, INCLUDING INDIVIDUAL TREES AND STUMPS	201.10	-
CM	COMMON EXCAVATION	203.15	99
CM	SOLID ROCK EXCAVATION	203.16	31
CM	EXCAVATION OF SURFACES AND PAVEMENTS	203.28	1
CM	TRENCH EXCAVATION OF EARTH	204.20	15
CM	TRENCH EXCAVATION OF ROCK	204.21	8
CM	TRENCH EXCAVATION OF EARTH, EXPLORATORY (N.A.B.I.)	204.22	EST.
CM	STRUCTURE EXCAVATION	204.25	2
SM	DRILLING AND BLASTING OF SOLID ROCK SUBGRADE	205.20	8
SM	COLD PLANING, BITUMINOUS PAVEMENT	210.10	14
CM	SUBBASE OF DENSE GRADED CRUSHED STONE	301.35	30
CM	AGGREGATE SURFACE COURSE	401.10	5
KG	EMULSIFIED ASPHALT	404.65	2
LU	PRICE ADJUSTMENT, ASPHALT CEMENT (N.A.B.I.)	406.50	-
T	SUPERPAVE BITUMINOUS CONCRETE PAVEMENT	490.30	39
LU	AIR VOIDS PAY ADJUSTMENT (N.A.B.I.)	490.31	-
LU	MAT DENSITY PAY ADJUSTMENT (N.A.B.I.)	490.32	-
KG	REINFORCING STEEL	507.15	2
CM	CONCRETE, CLASS B	541.25	-
	BEGIN OPTION AA		
EACH	450 CSPES 1.63 (68 X 12)	601.6015	-
EACH	450 CAAPES 1.52 (68 X 12)	601.6215	-
EACH	450 CPEPES	601.7015	-
	END OPTION AA		
	BEGIN OPTION BB		
EACH	1200 CSPES 2.77 (68 X 12)	601.6057	-
EACH	1200 CAAPES 2.67 (68 X 12)	601.6257	-
EACH	1200 RCPES CLASS III	601.6855	-
	END OPTION BB		
	BEGIN OPTION CC		
EACH	750 RCPES CLASS III	601.6835	-
EACH	750 CPEPES	601.7025	-
	END OPTION CC		
	BEGIN OPTION DD		
EACH	900 RCPES CLASS III	601.6845	-
EACH	900 CPEPES	601.7030	-
	END OPTION DD		
EACH	PRECAST REINFORCED CONCRETE CATCH BASIN WITH CAST IRON GRATE	604.20	-
EACH	PRECAST REINFORCED CONCRETE MANHOLE WITH CAST IRON COVER	604.21	-
EACH	CHANGING ELEVATION OF DROP INLETS, CATCH BASINS, OR MANHOLES	604.40	-

DETAILED SUMMARY OF QUANTITIES

QUANTITIES	UNIT	ITEMS
		ITEM 204.20 - TRENCH EXCAVATION OF EARTH
866	CM	PROPOSED DRAINAGE STRUCTURES
791	CM	EXISTING DRAINAGE REMOVAL
793	CM	TREATMENT SWALES
1047	CM	STONE LINED SWALES
288	CM	STONE OUTLET PROTECTION
3785	CM	SUBTOTAL
15	CM	ROUNDING
3800	CM	TOTAL
		ITEM 204.21 - TRENCH EXCAVATION OF ROCK
272	CM	PROPOSED DRAINAGE STRUCTURES
20	CM	EXISTING DRAINAGE REMOVAL
292	CM	SUBTOTAL
8	CM	ROUNDING
300	CM	TOTAL
		ITEM 301.35 - SUBBASE OF DENSE GRADED CRUSHED STONE
10432	CM	U.S. ROUTE 2
2684	CM	SIDE ROADS
428	CM	DRIVEWAYS
26	CM	WALKWAYS
13570	CM	SUBTOTAL
30	CM	ROUNDING
13600	CM	TOTAL
		ITEM 404.65 - EMULSFIED ASPHALT
2995	KG	U.S. ROUTE 2
753	KG	SIDE ROADS
3748	KG	SUBTOTAL
2	KG	ROUNDING
3750	KG	TOTAL
		ITEM 490.30 - SUPERPAVE BITUMINOUS CONCRETE PAVEMENT
5219	T	U.S. ROUTE 2 - TYPE IIS
3479	T	U.S. ROUTE 2 - TYPE IIIS
1177	T	U.S. ROUTE 2 - TYPE IVS
917	T	SIDE ROADS - TYPE IIS
1310	T	SIDE ROADS - TYPE IIIS
159	T	DRIVEWAYS - TYPE IIIS
12261	T	SUBTOTAL
39	T	ROUNDING
12300	T	TOTAL

REPLACEMENT SHEETS ISSUED 10/5/11

Stantec

PROJECT NAME: DANVILLE
PROJECT NUMBER: F EGC 028-3(32)

FILE NAME: ...\008-014 quantities 1-5.ptf
DESIGN SUPERVISOR: GARY SANTY
DESIGNED BY: STANTEC
QUANTITY SHEET QS-1

PLOT DATE: 10/4/2011
DRAWN BY: STANTEC
CHECKED BY: STANTEC
SHEET 8 OF 306

10/4/2011 2:41:42 PM V:\1853\active\185300033_092\Revised Plans\Plotfiles\008-014 quantities 1-5.ptf

STATE OF VERMONT
AGENCY OF TRANSPORTATION

QUANTITY SHEET 2

Metric

SUMMARY OF ESTIMATED QUANTITIES									TOTALS		DESCRIPTIONS				DETAILED SUMMARY OF QUANTITIES		
ROADWAY	NON-PART.	TRAINING	LANDSCAPING	EPSC	ARTISTIC ENHANCE.	UTILITIES	FIRE DISTRICT	FULL C.E. ITEMS	GRAND TOTAL	FINAL	UNIT	ITEMS	ITEM NUMBER	ROUND	QUANTITIES	UNIT	ITEMS
70									70		EACH	UNDERDRAIN FLUSHING BASIN	605.95	-			ITEM 619.17 - YIELDING MARKER POSTS
30									30		HR	POWER GRADER RENTAL	608.15	EST.	21	EA	DRAINAGE
30									30		HR	ALL PURPOSE EXCAVATOR RENTAL, TYPE I	608.25	EST.	15	EA	UNDERDRAIN
200									200		HR	POWER BROOM RENTAL, TYPE I	608.30	EST.	36	EA	SUBTOTAL
4									4		HR	POWER BROOM RENTAL, TYPE II	608.31	EST.	0	EA	ROUNDING
30									30		HR	TRUCK RENTAL	608.37	EST.	36	EA	TOTAL
30									30		HR	LOADER RENTAL, TYPE I	608.40	EST.			
10350									10350		CM	DUST CONTROL WITH WATER	609.10	EST.			
9									9		T	DUST AND ICE CONTROL WITH CALCIUM CHLORIDE	609.15	EST.			
190									190		CM	STONE FILL, TYPE I	613.10	7			
570									570		CM	STONE FILL, TYPE II	613.11	7			
520									520		M	GRANITE SLOPE EDGING	616.20	4			
2560									2560		M	VERTICAL GRANITE CURB	616.21	2			
32									32		M	REMOVAL OF EXISTING CURB	616.41	-			
0.6									0.6		T	BITUMINOUS CONCRETE GUTTERS AND TRAFFIC ISLANDS	616.47	-			
13									13		EACH	RELOCATE MAILBOX, SINGLE SUPPORT	617.10	-			
2620									2620		SM	PORTLAND CEMENT CONCRETE SIDEWALK, 125 MM	618.10	3			
390									390		SM	PORTLAND CEMENT CONCRETE SIDEWALK, 200 MM	618.11	7			
23									23		SM	DETECTABLE WARNING SURFACE	618.30	-			
36									36		EACH	YIELDING MARKER POSTS	619.17	-			
290									290		M	CHAIN-LINK FENCE, 1.8 M	620.12	5			
4									4		M	GATE FOR CHAIN-LINK FENCE, 1.8 M	620.16	-			
10									10		EACH	BRACING ASSEMBLY FOR CHAIN-LINK FENCE, 1.8 M	620.21	-			
45									45		M	REMOVING AND RESETTING FENCE	620.50	4			
140									140		M	REMOVAL OF EXISTING FENCE	620.55	2			
200									200		M	TEMPORARY TRAFFIC BARRIER	621.90	EST.			
800									800		M	REMOVE AND RESET TEMPORARY TRAFFIC BARRIER	621.95	EST.			
							24		24		CM	INSULATION BOARD	622.10	EST.			
22									22		M	SLEEVES FOR UTILITIES (1 SLEEVE X 600 MM)	625.10	-			
9									9		M	DUCTILE IRON PIPE, CEMENT-LINED (300 MM)	628.28	-			
10									10		M	PVC SEWER PIPE (200 MM)	628.35	1			
							30		30		EACH	ADJUST ELEVATION OF VALVE BOX	629.20	-			
	7						43		50		EACH	EXTENSION SERVICE BOX AND CURB STOP (20 MM)	629.25	-			
							2		2		EACH	GATE VALVE WITH VALVE BOX (100 MM)	629.27	-			
							6		6		EACH	GATE VALVE WITH VALVE BOX (150 MM)	629.27	-			
	1						14		15		EACH	GATE VALVE WITH VALVE BOX (200 MM)	629.27	-			
							5		5		EACH	HYDRANT	629.28	-			
							2		2		EACH	RELOCATE HYDRANT	629.29	-			
							4		4		EACH	REMOVE HYDRANT	629.30	-			
	1						2		3		EACH	TAPPING SLEEVE AND VALVE WITH VALVE BOX	629.35	-			

1/18/2011 2:20:27 PM V:\1953\c

Stantec

PROJECT NAME: DANVILLE
PROJECT NUMBER: F EGC 028-3(32)

FILE NAME: ...\008-014 quantities 1-5.ptf
DESIGN SUPERVISOR: GARY SANTY
DESIGNED BY: STANTEC
QUANTITY SHEET QS-2

PLOT DATE: 1/18/2011
DRAWN BY: STANTEC
CHECKED BY: STANTEC
SHEET 9 OF 306

STATE OF VERMONT
AGENCY OF TRANSPORTATION

QUANTITY SHEET 3

Metric

SUMMARY OF ESTIMATED QUANTITIES										TOTALS		DESCRIPTIONS				DETAILED SUMMARY OF QUANTITIES		
	ROADWAY	NON-PART.	TRAINING	LANDSCAPING	EPSC	ARTISTIC ENHANCE.	UTILITIES	FIRE DISTRICT	FULL C.E. ITEMS	GRAND TOTAL	FINAL	UNIT	ITEMS	ITEM NUMBER	ROUND	QUANTITIES	UNIT	ITEMS
		7						43		50		EACH	CORPORATION STOP (20 MM)	629.39	-			
								3		3		LS	TRANSFER TO NEW SYSTEM, WATER SYSTEM	629.42	-			
	2000									2000		HR	UNIFORMED TRAFFIC OFFICERS	630.10	EST.			
	7650									7650		HR	FLAGGERS	630.15	EST.			
									1	1		LS	FIELD OFFICE, ENGINEERS	631.10	-			
									1	1		LS	TESTING EQUIPMENT, CONCRETE	631.16	-			
									1	1		LS	TESTING EQUIPMENT, BITUMINOUS	631.17	-			
									3000	3000		DL	FIELD OFFICE TELEPHONE (N.A.B.I.)	631.26	-			
			1040							1040		HR	EMPLOYEE TRAINEESHIP	634.10	-			
	1									1		LS	MOBILIZATION/DEMOBILIZATION	635.11	-			
	1									1		LS	TRAFFIC CONTROL	641.10	-			
	1									1		LS	PUBLIC RELATIONS OFFICER	641.12	-			
	3									3		EACH	PORTABLE CHANGEABLE MESSAGE SIGN	641.15	-			
	3050									3050		M	DURABLE 100 MM WHITE LINE, RECESSED POLYUREA	646.406	20			
	4050									4050		M	DURABLE 100 MM YELLOW LINE, RECESSED POLYUREA	646.416	9			
	290									290		M	DURABLE 200 MM YELLOW LINE, RECESSED POLYUREA	646.456	10			
	50									50		M	DURABLE 600 MM STOP BAR, RECESSED POLYUREA	646.486	3			
	51									51		EACH	DURABLE LETTER OR SYMBOL, POLYUREA	646.494	-			
	110									110		M	DURABLE CROSSWALK MARKING, RECESSED TYPE I TAPE	646.507	8			
	6100									6100		M	TEMPORARY 100 MM WHITE LINE	646.600	EST.			
	8090									8090		M	TEMPORARY 100 MM YELLOW LINE	646.610	EST.			
	570									570		M	TEMPORARY 200 MM YELLOW LINE	646.650	EST.			
	100									100		M	TEMPORARY 600 MM STOP BAR	646.680	EST.			
	102									102		EACH	TEMPORARY LETTER OR SYMBOL	646.690	EST.			
	210									210		M	TEMPORARY CROSSWALK MARKING	646.700	EST.			
	1250									1250		EACH	LINE STRIPING TARGETS	646.76	EST.			
	295									295		M	PAINTED CURB	646.81	5			
	200									200		SM	REMOVAL OF EXISTING PAVEMENT MARKINGS	646.85	EST.			
	5060									5060		SM	GEOTEXTILE FOR ROADBED SEPARATOR	649.11	8			
	1560									1560		SM	GEOTEXTILE UNDER STONE FILL	649.31	12			
						670				670		SM	GEOTEXTILE FOR SILT FENCE	649.51	11			
	265									265		KG	SEED	651.15	5			
						150				150		KG	SEED, WINTER RYE	651.17	4			
	1620					1170				2790		KG	FERTILIZER	651.18	7			
	13					9				22		T	AGRICULTURAL LIMESTONE	651.20	-			
	13					9				22		T	HAY MULCH	651.25	-			
	2890									2890		CM	TOPSOIL	651.35	4			
				1150						1150		SM	GRUBBING MATERIAL	651.40	20			
						1				1		LS	EPSC PLAN	652.10	-			
						1500				1500		HR	MONITORING EPSC PLAN	652.20	EST.			

1/18/2011 2:20:28 PM V:\1953\c

Stantec

PROJECT NAME: DANVILLE
PROJECT NUMBER: F EGC 028-3(32)

FILE NAME: ...\008-014 quantities 1-5.ptf
DESIGN SUPERVISOR: GARY SANTY
DESIGNED BY: STANTEC
QUANTITY SHEET QS-3

PLOT DATE: 1/18/2011
DRAWN BY: STANTEC
CHECKED BY: STANTEC
SHEET 10 OF 306

STATE OF VERMONT
AGENCY OF TRANSPORTATION

QUANTITY SHEET 4

Metric

SUMMARY OF ESTIMATED QUANTITIES

ROADWAY	NON-PART.	TRAINING	LANDSCAPING	EPSC	ARTISTIC ENHANCE.	UTILITIES	FIRE DISTRICT	FULL C.E. ITEMS	GRAND TOTAL	FINAL	UNIT	ITEMS	ITEM NUMBER	ROUND
				1					1		LU	MAINTENANCE OF EPSC PLAN (N.A.B.I.)	652.30	-
				17300					17300		SM	TEMPORARY EROSION MATTING	653.20	31
				130					130		CM	TEMPORARY STONE CHECK DAM, TYPE I	653.25	3
				100					100		CM	VEHICLE TRACKING PAD	653.35	5
				29					29		EACH	INLET PROTECTION DEVICE, TYPE I	653.40	-
				77					77		EACH	INLET PROTECTION DEVICE, TYPE II	653.41	-
5									5		EACH	FILTER BAG	653.45	EST.
				55					55		M	BARRIER FENCE	653.50	2
				3400					3400		M	PROJECT DEMARCATION FENCE	653.55	43
			10						10		EACH	EVERGREEN TREES (LARIX DECIDUA)(LARCH)(1.8-2.4 M HT.)	656.20	-
			10						10		EACH	EVERGREEN TREES (PICEA GLAUCA)(WHITE SPRUCE)(1.8-2.4 M HT.)	656.20	-
			17						17		EACH	EVERGREEN TREES (THUJA OCCIDENTALIS)(ARBORVITAE)(900-1200 MM HT.)	656.20	-
			13						13		EACH	DECIDUOUS TREES (ACER SACCHARUM 'GREEN MOUNTAIN')(GREEN MOUNTAIN SUGAR MAPLE)(80-90 MM CAL.)	656.30	-
			2						2		EACH	DECIDUOUS TREES (ACER X. FREEMANII ' JEFFERSRED')(AUTUMN BLAZE MAPLE)(50-80 MM CAL.)	656.30	-
			4						4		EACH	DECIDUOUS TREES (ACER X. FREEMANII 'ARMSTRONG')(ARMSTRONG FREEMAN MAPLE)(50-65 MM CAL.)	656.30	-
			1						1		EACH	DECIDUOUS TREES (BETLUA NIGRA ' LITTLE KING')(RIVER BIRCH)(#7 CONT.)	656.30	-
			6						6		EACH	DECIDUOUS TREES (BETULA LENTA)(SWEET BIRCH)(2.4-3 M CLUMP)	656.30	-
			3						3		EACH	DECIDUOUS TREES (CARPINUS CAROLINIANA)(AMERICAN HORNBEAM)(50-65 MM CAL.)	656.30	-
			4						4		EACH	DECIDUOUS TREES (CELTIS OCCIDENTALIS)(COMMON HACKBERRY)(50-65 MM CAL.)	656.30	-
			4						4		EACH	DECIDUOUS TREES (CERCIDIPHYLLUM JAPONICUM)(KATSURA TREE)(50-65 MM CAL.)	656.30	-
			3						3		EACH	DECIDUOUS TREES (CRATAEGUS CRUS-GALLI VAR. INERMIS)(THORNLESS COCKSPUR HAWTHORNE)(40-45 MM CAL.)	656.30	-
			2						2		EACH	DECIDUOUS TREES (GINKGO BILOBA ' PRINCETON SENTRY')(PRINCETON SENTRY GINKGO)(50-65 MM CAL.)	656.30	-
			20						20		EACH	DECIDUOUS TREES (MALUS 'ADIRONDACK')(ADIRONDACK CRABAPPLE)(1.2-1.5 M HT.)	656.30	-
			3						3		EACH	DECIDUOUS TREES (OSTRYA VIRGINIANA)(AMERICAN HOPHORNBEAM)(50-65 MM CAL.)	656.30	-
			15						15		EACH	DECIDUOUS TREES (QUERCUS MACROCARPA)(BUR OAK)(50-65 MM CAL.)	656.30	-
			26						26		EACH	DECIDUOUS TREES (QUERCUS RUBRA)(RED OAK)(50-65 MM CAL.)	656.30	-
			28						28		EACH	DECIDUOUS TREES (SYRINGA RETICULATA 'IVORY SILK')(JAPANESE TREE LILAC)(40-45 MM CAL.)	656.30	-
			4						4		EACH	DECIDUOUS TREES (TILIA AMERICANA ' REDMOND')(REDMOND AMERICAN BASSWOOD)(50-65 MM CAL.)	656.30	-
			14						14		EACH	DECIDUOUS TREES (ULMUS AMERICANA 'PRINCETON')(PRINCETON AMERICAN ELM)(80-90 MM CAL.)	656.30	-
			4						4		EACH	DECIDUOUS SHRUBS (CALAMAGROSTIS ACUTIFLORA)('OVERDAM' FEATHER REED GRASS)(1 GAL.)	656.35	-
			32						32		EACH	DECIDUOUS SHRUBS (CAMPANULE CARPATICA)(WHITE CLIPS)(2 QT. POT)	656.35	-
			26						26		EACH	DECIDUOUS SHRUBS (CLETHRA ALNIFOLIA)(HUMMINGBIRD SUMMERSWEET)(2 GAL.)	656.35	-
			5						5		EACH	DECIDUOUS SHRUBS (CORNUS SERICEA 'BALYEI')(RED STEM DOGWOOD)(#3 CONT.)	656.35	-
			2						2		EACH	DECIDUOUS SHRUBS (HAMMAMELIS VIRGINIANA)(WITCH HAZEL)(#7 CONT.)	656.35	-

DETAILED SUMMARY OF QUANTITIES

QUANTITIES	UNIT	ITEMS
FOR ITEM 656.30 & ITEM 656.35:		
SEE LANDSCAPE NOTES FOR THE LIST OF APPROVED TREE AND SHRUB ALTERNATE SELECTIONS		

1/18/2011 2:20:29 PM V:\9553\c

Stantec

PROJECT NAME: DANVILLE
PROJECT NUMBER: F EGC 028-3(32)

FILE NAME: ...\008-014 quantities 1-5.ptf
DESIGN SUPERVISOR: GARY SANTY
DESIGNED BY: STANTEC
QUANTITY SHEET QS-4

PLOT DATE: 1/18/2011
DRAWN BY: STANTEC
CHECKED BY: STANTEC
SHEET 11 OF 306

STATE OF VERMONT
AGENCY OF TRANSPORTATION

QUANTITY SHEET 5

Metric

SUMMARY OF ESTIMATED QUANTITIES

ROADWAY	NON-PART.	TRAINING	LANDSCAPING	EPSC	ARTISTIC ENHANCE.	UTILITIES	FIRE DISTRICT	FULL C.E. ITEMS
			163					
			13					
			2					
			4					
			8					
			10					
			19					
			16					
			3800					
			750					
			1					
58	3							
7								
46								
468	27							
113	13							
10	4							
	3							
1								
3								
8								
2886								
159								
10								
25								
253								
59								
6								
1								
59								
62								
1								
1510								
100								
						19		
						2		
						4		

TOTALS

GRAND TOTAL	FINAL
163	
13	
2	
4	
8	
10	
19	
16	
3800	
750	
1	
61	
7	
46	
495	
126	
14	
3	
1	
3	
8	
2886	
159	
10	
25	
253	
59	
6	
1	
59	
62	
1	
1510	
100	
19	
2	
4	

DESCRIPTIONS

UNIT	ITEMS	ITEM NUMBER	ROUND
EACH	DECIDUOUS SHRUBS (HEMEROCALIS X. HYBRIDA)(DAYLILY)(2 QT. POT)	656.35	-
EACH	DECIDUOUS SHRUBS (ILEX VERTICILLATA ' RED SPRITE')(DWARF WINTERBERRY (FEMALE)(#3 CONT.)	656.35	-
EACH	DECIDUOUS SHRUBS (ILEX VERTICILLATA 'JIM DANDY')(DWARF WINTERBERRY (MALE))(#3 CONT.)	656.35	-
EACH	DECIDUOUS SHRUBS (KALMIA LATIFOLIA 'TINKERBELL')(SHEEP LAUREL)(2 GAL.)	656.35	-
EACH	DECIDUOUS SHRUBS (PENSTEMON BARBATUS)('PRAIRIE DUSK' SCARLET BUGLER)(2 QT. POTS)	656.35	-
EACH	DECIDUOUS SHRUBS (POTENTILLA FRUTICOSA)('ABBOTSWOOD' BUSH CINQUEFOIL)(2 GAL.)	656.35	-
EACH	DECIDUOUS SHRUBS (RHUS AROMATICA 'GRO-LOW')(GRO-LOW FRAGRANT SUMAC)(1 GAL.)	656.35	-
EACH	DECIDUOUS SHRUBS (WEIGELA FLORIDA)('MIDNIGHT WAVE')(2 GAL.)	656.35	-
CM	LANDSCAPE WATERING	656.65	EST.
CM	LANDSCAPE BACKFILL, TRUCK MEASUREMENT	656.80	11
LS	TREE PROTECTION	656.85	-
SM	TRAFFIC SIGNS, TYPE A	675.20	2
SM	TRAFFIC SIGNS, TYPE B	675.21	-
KG	TUBULAR ALUMINUM SIGN POST	675.32	1
M	SQUARE TUBE SIGN POST AND ANCHOR	675.341	2
EACH	REMOVING SIGNS	675.50	-
EACH	ERECTING SALVAGED SIGNS	675.60	-
EACH	SETTING SALVAGED POSTS	675.61	-
EACH	TRAFFIC CONTROL SIGNAL SYSTEM, INTERSECTION	678.15	-
EACH	FLASHING BEACON, GROUND MOUNTED	678.16	-
M	WIRED CONDUIT (100 MM)(PVC)	678.23	-
M	WIRED CONDUIT (50 MM)(PVC)	678.23	-
M	WIRED CONDUIT (75 MM)(PVC)	678.23	-
EACH	PULL BOX, STANDARD	678.25	-
EACH	JUNCTION BOX	678.26	-
M	ELECTRICAL CONDUIT SLEEVE (200 MM)(PVC)	678.30	-
EACH	LIGHT POLE BASE	679.21	-
EACH	BREAKAWAY FEATURE FOR LIGHT POLE	679.23	-
EACH	REMOVING AND RESETTING LIGHT POLE	679.25	-
EACH	LIGHT POLE	679.45	-
EACH	LUMINAIRE	679.50	-
LU	PRICE ADJUSTMENT, FUEL (N.A.B.I.)	690.50	-
CM	SPECIAL PROVISION (CLAY BORROW)	900.608	9
CM	SPECIAL PROVISION (CONTROLLED DENSITY (FLOWABLE) FILL)	900.608	8
EACH	SPECIAL PROVISION (BURIED CABLE PEDESTAL)	900.620	-
EACH	SPECIAL PROVISION (CVPS 1 PHASE TRANSFORMER)	900.620	-
EACH	SPECIAL PROVISION (CVPS 3 PHASE VAULT)	900.620	-

DETAILED SUMMARY OF QUANTITIES

QUANTITIES	UNIT	ITEMS

REPLACEMENT SHEETS ISSUED 10/5/11

Stantec

PROJECT NAME: DANVILLE
PROJECT NUMBER: F EGC 028-3(32)

FILE NAME: ...\008-014 quantities 1-5.ptf
DESIGN SUPERVISOR: GARY SANTY
DESIGNED BY: STANTEC
QUANTITY SHEET QS-5

PLOT DATE: 10/4/2011
DRAWN BY: STANTEC
CHECKED BY: STANTEC
SHEET 12 OF 306

10/4/2011 2:44:02 PM V:\1953\active\19530033.092\Revised Plans\Plotfiles\008-014 quantities 1-5.ptf

STATE OF VERMONT
AGENCY OF TRANSPORTATION

QUANTITY SHEET 6

Metric

SUMMARY OF ESTIMATED QUANTITIES										TOTALS		DESCRIPTIONS				DETAILED SUMMARY OF QUANTITIES		
	ROADWAY	NON-PART.	TRAINING	LANDSCAPING	EPSC	ARTISTIC ENHANCE.	UTILITIES	FIRE DISTRICT	FULL C.E. ITEMS	GRAND TOTAL	FINAL	UNIT	ITEMS	ITEM NUMBER	ROUND	QUANTITIES	UNIT	ITEMS
								3		3		EACH	SPECIAL PROVISION (FROST-FREE MANHOLE)	900.620	-			
						22				22		EACH	SPECIAL PROVISION (GRANITE POST)	900.620	-			
							8			8		EACH	SPECIAL PROVISION (J VAULT)(3.7 M x 1.8 M x 2.1 M)	900.620	-			
	2						1			3		EACH	SPECIAL PROVISION (METER PEDESTAL)	900.620	-			
	5									5		EACH	SPECIAL PROVISION (PORCH SUPPORT)	900.620	-			
	1									1		EACH	SPECIAL PROVISION (REMOVAL OF EXISTING TRAFFIC CONTROL SIGNAL SYSTEM)	900.620	-			
							17			17		EACH	SPECIAL PROVISION (REPLACEMENT OF EXISTING METER SOCKET)	900.620	-			
					1					1		EACH	SPECIAL PROVISION (TEMPORARY SEDIMENT BASIN)	900.620	-			
													BEGIN OPTION EE					
	22									22		M	SPECIAL PROVISION (1200 CAAP 2.67 (68 X 12), ALL-INCLUSIVE)	900.640	-			
	22									22		M	SPECIAL PROVISION (1200 PCCSP 2.77 (68 X 12), ALL-INCLUSIVE)	900.640	-			
	22									22		M	SPECIAL PROVISION (1200 RCP CLASS III, ALL-INCLUSIVE)	900.640	-			
													END OPTION EE					
	85									85		M	SPECIAL PROVISION (150 MM UNDERDRAIN CARRIER PIPE, ALL-INCLUSIVE)	900.640	2			
	3050									3050		M	SPECIAL PROVISION (150 MM UNDERDRAIN PIPE, ALL-INCLUSIVE)	900.640	47			
													BEGIN OPTION FF					
	24									24		M	SPECIAL PROVISION (300 CAAP 1.52 (68 X 12), ALL-INCLUSIVE)	900.640	-			
	24									24		M	SPECIAL PROVISION (300 PCCSP 1.63 (68 X 12), ALL-INCLUSIVE)	900.640	-			
	24									24		M	SPECIAL PROVISION (300 RCP CLASS III, ALL-INCLUSIVE)	900.640	-			
	24									24		M	SPECIAL PROVISION (300 CPEP, ALL-INCLUSIVE)	900.640	-			
	24									24		M	SPECIAL PROVISION (300 CPEP(SL), ALL-INCLUSIVE)	900.640	-			
													END OPTION FF					
	5									5		M	SPECIAL PROVISION (300 PCCSP 1.63 (68 X 12) , ALL-INCLUSIVE)	900.640	-			
													BEGIN OPTION GG					
	231									231		M	SPECIAL PROVISION (450 CAAP 1.52 (68 X 12), ALL-INCLUSIVE)	900.640	-			
	231									231		M	SPECIAL PROVISION (450 PCCSP 1.63 (68 X 12), ALL-INCLUSIVE)	900.640	-			
	231									231		M	SPECIAL PROVISION (450 CPEP, ALL-INCLUSIVE)	900.640	-			
													END OPTION GG					
													BEGIN OPTION HH					
	443									443		M	SPECIAL PROVISION (450 CAAP 1.52 (68 X 12), ALL-INCLUSIVE)	900.640	-			
	443									443		M	SPECIAL PROVISION (450 PCCSP 1.63 (68 X 12), ALL-INCLUSIVE)	900.640	-			
	443									443		M	SPECIAL PROVISION (450 RCP CLASS III, ALL-INCLUSIVE)	900.640	-			
	443									443		M	SPECIAL PROVISION (450 CPEP, ALL-INCLUSIVE)	900.640	-			
	443									443		M	SPECIAL PROVISION (450 CPEP(SL), ALL-INCLUSIVE)	900.640	-			
													END OPTION HH					
													BEGIN OPTION II					
	344									344		M	SPECIAL PROVISION (450 RCP CLASS III, ALL-INCLUSIVE)	900.640	-			
	344									344		M	SPECIAL PROVISION (450 CPEP(SL), ALL-INCLUSIVE)	900.640	-			
													END OPTION II					

REPLACEMENT SHEETS ISSUED 10/5/11

Stantec

PROJECT NAME: DANVILLE
PROJECT NUMBER: F EGC 028-3(32)

FILE NAME: ...\008-014 quantities 1-5.ptf
DESIGN SUPERVISOR: GARY SANTY
DESIGNED BY: STANTEC
QUANTITY SHEET QS-6

PLOT DATE: 10/4/2011
DRAWN BY: STANTEC
CHECKED BY: STANTEC
SHEET 13 OF 306

10/4/2011 2:44:37 PM V:\1853\active\185300033_0921\Revised Plans\Plotfiles\008-014 quantities 1-5.ptf

STATE OF VERMONT
AGENCY OF TRANSPORTATION

QUANTITY SHEET 7

Metric

SUMMARY OF ESTIMATED QUANTITIES									TOTALS		DESCRIPTIONS				DETAILED SUMMARY OF QUANTITIES		
ROADWAY	NON-PART.	TRAINING	LANDSCAPING	EPSC	ARTISTIC ENHANCE.	UTILITIES	FIRE DISTRICT	FULL C.E. ITEMS	GRAND TOTAL	FINAL	UNIT	ITEMS	ITEM NUMBER	ROUND	QUANTITIES	UNIT	ITEMS
												BEGIN OPTION JJ					ITEM 900.640 - SPECIAL PROVISION (CONCRETE ENCASED DUCT BANK, 1-4 DUCTS)(100 MM)
101									101		M	SPECIAL PROVISION (600 CAAP 1.52 (68 X 12), ALL-INCLUSIVE)	900.640	-			
															404	M	FAIRPOINT
101									101		M	SPECIAL PROVISION (600 PCCSP 1.63 (68 X 12), ALL-INCLUSIVE)	900.640	-	594	M	CHARTER
															998	M	SUBTOTAL
101									101		M	SPECIAL PROVISION (600 CPEP, ALL-INCLUSIVE)	900.640	-	2	M	ROUNDING
															1000	M	TOTAL
												END OPTION JJ					
												BEGIN OPTION KK					ITEM 900.640 - SPECIAL PROVISION (CONCRETE ENCASED DUCT BANK, 1-4 DUCTS)(125 MM)
8									8		M	SPECIAL PROVISION (600 CAAP 1.52 (68 X 12), ALL-INCLUSIVE)	900.640	-			
															174	M	CVPS
8									8		M	SPECIAL PROVISION (600 PCCSP 1.63 (68 X 12), ALL-INCLUSIVE)	900.640	-	174	M	SUBTOTAL
															6	M	ROUNDING
8									8		M	SPECIAL PROVISION (600 RCP CLASS III, ALL-INCLUSIVE)	900.640	-	180	M	TOTAL
8									8		M	SPECIAL PROVISION (600 CPEP, ALL-INCLUSIVE)	900.640	-			
8									8		M	SPECIAL PROVISION (600 CPEP(SL), ALL-INCLUSIVE)	900.640	-			ITEM 900.640 - SPECIAL PROVISION (CONCRETE ENCASED DUCT BANK, 1-4 DUCTS)(50 MM)
												END OPTION KK			13	M	CHARTER
															13	M	SUBTOTAL
												BEGIN OPTION LL			1	M	ROUNDING
															14	M	TOTAL
7									7		M	SPECIAL PROVISION (600 RCP CLASS III, ALL-INCLUSIVE)	900.640	-			
7									7		M	SPECIAL PROVISION (600 CPEP(SL), ALL-INCLUSIVE)	900.640	-			ITEM 900.640 - SPECIAL PROVISION (CONCRETE ENCASED DUCT BANK, 1-4 DUCTS)(75 MM)
												END OPTION LL					
												BEGIN OPTION MM			95	M	CVPS
															95	M	SUBTOTAL
															1	M	ROUNDING
498									498		M	SPECIAL PROVISION (750 CAAP 1.91 (68 X 12), ALL-INCLUSIVE)	900.640	-	96	M	TOTAL
498									498		M	SPECIAL PROVISION (750 PCCSP 2.01 (68 X 12), ALL-INCLUSIVE)	900.640	-			
498									498		M	SPECIAL PROVISION (750 CAAP 1.91 (68 X 12), ALL-INCLUSIVE)	900.640	-			
498									498		M	SPECIAL PROVISION (750 PCCSP 2.01 (68 X 12), ALL-INCLUSIVE)	900.640	-			
498									498		M	SPECIAL PROVISION (750 CPEP, ALL-INCLUSIVE)	900.640	-			
												END OPTION MM					
												BEGIN OPTION NN					
44									44		M	SPECIAL PROVISION (750 CAAP 1.91 (68 X 12), ALL-INCLUSIVE)	900.640	-			
44									44		M	SPECIAL PROVISION (750 PCCSP 2.01 (68 X 12), ALL-INCLUSIVE)	900.640	-			
44									44		M	SPECIAL PROVISION (750 RCP CLASS III, ALL-INCLUSIVE)	900.640	-			
44									44		M	SPECIAL PROVISION (750 CPEP, ALL-INCLUSIVE)	900.640	-			
44									44		M	SPECIAL PROVISION (750 CPEP(SL), ALL-INCLUSIVE)	900.640	-			
												END OPTION NN					
												BEGIN OPTION OO					
51									51		M	SPECIAL PROVISION (750 RCP CLASS III, ALL-INCLUSIVE)	900.640	-			
51									51		M	SPECIAL PROVISION (750 CPEP(SL), ALL-INCLUSIVE)	900.640	-			
												END OPTION OO					
												BEGIN OPTION PP					
105									105		M	SPECIAL PROVISION (900 RCP CLASS III, ALL-INCLUSIVE)	900.640	-			
105									105		M	SPECIAL PROVISION (900 CPEP(SL), ALL-INCLUSIVE)	900.640	-			
												END OPTION PP					
						1000			1000		M	SPECIAL PROVISION (CONCRETE ENCASED DUCT BANK, 1-4 DUCTS)(100 MM)	900.640	2			
						180			180		M	SPECIAL PROVISION (CONCRETE ENCASED DUCT BANK, 1-4 DUCTS)(125 MM)	900.640	6			
						14			14		M	SPECIAL PROVISION (CONCRETE ENCASED DUCT BANK, 1-4 DUCTS)(50 MM)	900.640	1			
						96			96		M	SPECIAL PROVISION (CONCRETE ENCASED DUCT BANK, 1-4 DUCTS)(75 MM)	900.640	1			

10/4/2011 2:45:11 PM V:\1853\active\185300033_092\Rev\Seq Plans\Plotfiles\008-014 quantities 1-5.ptf

REPLACEMENT SHEETS ISSUED 10/5/11

Stantec

PROJECT NAME: DANVILLE
PROJECT NUMBER: F EGC 028-3(32)

FILE NAME: ...\008-014 quantities 1-5.ptf
DESIGN SUPERVISOR: GARY SANTY
DESIGNED BY: STANTEC
QUANTITY SHEET QS-7

PLOT DATE: 10/4/2011
DRAWN BY: STANTEC
CHECKED BY: STANTEC
SHEET 14 OF 306

STATE OF VERMONT
AGENCY OF TRANSPORTATION

QUANTITY SHEET 8

Metric

SUMMARY OF ESTIMATED QUANTITIES

ROADWAY	NON-PART.	TRAINING	LANDSCAPING	EPSC	ARTISTIC ENHANCE.	UTILITIES	FIRE DISTRICT	FULL C.E. ITEMS	GRAND TOTAL	FINAL	UNIT	ITEMS	ITEM NUMBER	ROUND
						405			405		M	SPECIAL PROVISION (CONCRETE ENCASED DUCT BANK, 5-8 DUCTS)(100 MM)	900.640	7
											M	SPECIAL PROVISION (CONCRETE ENCASED DUCT BANK, 9-12 DUCTS)(100 MM)	900.640	-
						192			192		M	SPECIAL PROVISION (DIRECT BURIAL DUCT BANK, 1-4 DUCTS)(100 MM)	900.640	2
						380			380		M	SPECIAL PROVISION (DIRECT BURIAL DUCT BANK, 1-4 DUCTS)(125 MM)	900.640	3
						105			105		M	SPECIAL PROVISION (DIRECT BURIAL DUCT BANK, 1-4 DUCTS)(50 MM)	900.640	2
						390			390		M	SPECIAL PROVISION (DIRECT BURIAL DUCT BANK, 1-4 DUCTS)(75 MM)	900.640	7
							25		25		M	SPECIAL PROVISION (DUCTILE IRON PIPE, CEMENT-LINED, ALL-INCLUSIVE)(100 MM)	900.640	-
							70		70		M	SPECIAL PROVISION (DUCTILE IRON PIPE, CEMENT-LINED, ALL-INCLUSIVE)(150 MM)	900.640	-
	220						1230		1450		M	SPECIAL PROVISION (DUCTILE IRON PIPE, CEMENT-LINED, ALL-INCLUSIVE)(200 MM)	900.640	-
							5		5		M	SPECIAL PROVISION (DUCTILE IRON PIPE, CEMENT-LINED, ALL-INCLUSIVE)(300 MM)	900.640	-
					65				65		M	SPECIAL PROVISION (GRANITE POST AND WOOD DIAMOND RAIL FENCE)	900.640	3
	50						425		475		M	SPECIAL PROVISION (SEAMLESS COPPER WATER TUBE, ALL-INCLUSIVE)(20 MM)	900.640	-
					1				1		LS	SPECIAL PROVISION (DANVILLE CIRCLE)	900.645	-
					1				1		LS	SPECIAL PROVISION (FIELDSTONE WALL)	900.645	-
	1						1		2		LS	SPECIAL PROVISION (INSERTION VALVE WITH VALVE BOX)(200 MM)	900.645	-
					1				1		LS	SPECIAL PROVISION (MAPMAKER)	900.645	-
							1		1		LS	SPECIAL PROVISION (PRESSURE REDUCING VAULT)	900.645	-
					1				1		LS	SPECIAL PROVISION (RECONSTRUCT BANDSTAND)	900.645	-
	1								1		LS	SPECIAL PROVISION (REMOVE AND RELOCATE EXISTING STONE WALL)	900.645	-
	1								1		LS	SPECIAL PROVISION (REMOVE AND SALVAGE CONCRETE WHEEL STOPS)	900.645	-
	1								1		LS	SPECIAL PROVISION (REMOVE AND SALVAGE WOODEN RETAINING WALL)	900.645	-
	1								1		LS	SPECIAL PROVISION (TEMPORARY ROADWAY WIDENING)(STAGE 2)	900.645	-
	0.165						0.835		1		LS	SPECIAL PROVISION (TEMPORARY WATER LINE)	900.645	-
					1				1		LS	SPECIAL PROVISION (WATER TROUGH AND STAIRS)	900.645	-
	190								190		SM	SPECIAL PROVISION (HAND-PLACED BITUMINOUS CONCRETE MATERIAL, DRIVES)	900.675	2
	75								75		SM	SPECIAL PROVISION (PRECAST CONCRETE GRAVITY RETAINING WALL)	900.675	4
	160								160		SM	SPECIAL PROVISION (STAMPED CONCRETE ISLAND, 125 MM)	900.675	4
	1440								1440		T	SPECIAL PROVISION (BITUMINOUS CONCRETE PAVEMENT, SMALL QUANTITY)	900.680	5

DETAILED SUMMARY OF QUANTITIES

QUANTITIES	UNIT	ITEMS
		ITEM 900.640 - SPECIAL PROVISION (CONCRETE ENCASED DUCT BANK, 5-8 DUCTS)(100 MM)
398	M	FAIRPOINT
118	M	CHARTER
398	M	SUBTOTAL
7	M	ROUNDING
405	M	TOTAL
		~~ITEM 900.640 - SPECIAL PROVISION (CONCRETE ENCASED DUCT BANK, 9-12 DUCTS)(100 MM)~~
5	M	FAIRPOINT
5	M	SUBTOTAL
0	M	ROUNDING
5	M	TOTAL
		ITEM 900.640 - SPECIAL PROVISION (DIRECT BURIAL DUCT BANK, 1-4 DUCTS)(100 MM)
122	M	FAIRPOINT
68	M	CHARTER
190	M	SUBTOTAL
2	M	ROUNDING
192	M	TOTAL
		ITEM 900.640 - SPECIAL PROVISION (DIRECT BURIAL DUCT BANK, 1-4 DUCTS)(125 MM)
377	M	CVPS
377	M	SUBTOTAL
3	M	ROUNDING
380	M	TOTAL
		ITEM 900.640 - SPECIAL PROVISION (DIRECT BURIAL DUCT BANK, 1-4 DUCTS)(50 MM)
103	M	CHARTER
103	M	SUBTOTAL
2	M	ROUNDING
105	M	TOTAL
		ITEM 900.640 - SPECIAL PROVISION (DIRECT BURIAL DUCT BANK, 1-4 DUCTS)(75 MM)
383	M	CVPS
383	M	SUBTOTAL
7	M	ROUNDING
390	M	TOTAL
		ITEM 900.680 - SPECIAL PROVISION (BITUMINOUS CONCRETE PAVEMENT, SMALL QUANTITY)
539	T	DRAINAGE
5	T	UTILITIES
172	T	FIRE DISTRICT
702	T	ELECTRICAL / TRAFFIC
17	T	TEMPORARY SIDEWALK RAMPS
1435	T	SUBTOTAL
5	T	ROUNDING
1440	T	TOTAL

REPLACEMENT SHEETS ISSUED 10/5/11

Stantec

PROJECT NAME: DANVILLE
PROJECT NUMBER: F EGC 028-3(32)

FILE NAME: ...\008-014 quantities 1-5.ptf
DESIGN SUPERVISOR: GARY SANTY
DESIGNED BY: STANTEC
QUANTITY SHEET QS-8

PLOT DATE: 10/4/2011
DRAWN BY: STANTEC
CHECKED BY: STANTEC
SHEET 15 OF 306

10/4/2011 2:45:47 PM V:\953\cpt\ive\953x0033_092\Rev'sed Plans\PlotFiles\008-014 quantities 1-5.ptf

STATE OF VERMONT
AGENCY OF TRANSPORTATION

ITEM DETAIL SHEET

Metric

CURB

BEGIN STATION km + m	END STATION km + m	POSITION LEFT m	POSITION RIGHT m	REMARKS
ITEM 616.20 - GRANITE SLOPE EDGING				
2+012.1	2+045.4	33.3		
2+046.9	2+139.1	86.3		
2+152.7	5+078.5	75.1		Lt - Rt
4+020.5	4+055.3		34.8	
4+020.8	4+055.3	35.0		
4+056.8	4+099.5		42.8	
4+056.8	4+100.3	44.0		
5+017.1	5+070.4		52.8	
18+569.8	18+590.2		41.6	Cntr Island
19+612.6	19+647.4	35.3	35.3	Cntr Island
POSITION TOTAL =		309	207	
SUBTOTAL =		516		
ROUNDING =		4		
TOTAL =		520		
ITEM 616.21 - VERTICAL GRANITE CURB				
1+018.4	1+040.0	20.3		
1+020.0	18+926.2		26.9	Rt - Lt
1+020.7	1+030.0		10.6	
2+011.8	2+045.4		34.0	
2+046.9	2+074.5		27.6	
2+078.9	2+092.8		15.5	
2+103.2	2+118.2		17.4	
2+120.9	2+139.4		18.8	
2+152.3	2+171.3		19.3	
2+197.6	2+210.0		12.4	
2+211.8	2+225.6	26.2		
4+014.0	4+019.4	7.1		
5+017.1	5+022.4	5.3		
5+025.9	5+058.7	32.8		
5+063.1	5+091.0	30.4		
5+091.0	5+112.5	31.4		
18+507.73	18+519.9	12.6		
18+507.73	18+653.4		145.4	
18+527.9	18+646.2	118.6		
18+653.3	18+758.1	104.6		
18+667.8	18+903.9		235.7	
18+768.5	18+786.5	18.1		
18+794.5	18+822.3	27.7		
18+835.2	1+017.6	75.5		
18+908.0	18+926.2		17.3	
18+919.5	18+925.8	6.8	6.8	Cntr Island
18+927.8	18+956.0	28.5		
18+927.8	18+960.5		32.6	
18+928.2	18+934.5	6.8	6.8	Cntr Island
18+960.8	18+990.9	30.6		
18+963.3	18+979.0		15.5	
18+982.5	19+003.4		21.0	
18+998.5	19+052.3	57.3		
19+010.6	19+015.5		5.0	
19+019.1	19+026.9		7.8	
19+034.1	19+042.5		8.5	
19+054.5	19+060.4		5.9	
19+059.5	19+087.0	29.2		
19+067.2	19+068.9		9.2	P. Lot
19+067.6	19+075.4		7.8	
19+069.3	19+075.4		6.2	P. Lot
19+069.3	19+078.7		22.0	P. Lot
19+081.0	19+083.5		6.9	P. Lot
19+082.4	19+083.5		7.5	P. Lot
19+082.5	19+114.7		33.0	
19+090.7	19+096.5	5.7		
19+101.3	19+114.8		30.3	Rt Island
19+103.8	19+115.5	11.5		
19+116.2	19+120.9		5.3	
19+117.0	19+125.4	8.2		
19+117.0	19+120.0		10.1	Rt Island
19+132.6	19+169.9		42.6	
19+133.5	19+160.0		55.5	Rt Island
19+135.0	19+166.1	30.6		
19+135.0	19+144.8	11.8		
19+135.0	19+148.7	27.7		Lt Island
19+184.8	19+186.2		4.7	Rt Island
19+185.2	19+186.1	33.0		Lt Island
19+188.0	19+222.2		38.8	
19+188.5	19+209.8		46.1	Rt Island
19+188.6	19+199.5	23.4		Lt Island
19+211.5	19+220.9	9.2		
19+227.9	19+256.9		35.2	
19+232.4	19+262.1	29.4		
19+260.2	19+332.0		71.8	

CURB

BEGIN STATION km + m	END STATION km + m	POSITION LEFT m	POSITION RIGHT m	REMARKS
ITEM 616.21 - VERTICAL GRANITE CURB (CONT.)				
19+270.1	19+343.2	73.1		
19+341.0	19+379.0		38.0	
19+363.7	19+424.5	60.3		
19+390.6	19+428.6		38.4	
19+440.1	19+485.2		45.5	
19+447.5	19+462.9	14.8		
19+492.0	19+554.2	62.2		
19+493.6	19+522.7		29.1	
19+534.3	19+554.9		20.6	
19+566.8	19+650.0		83.1	
19+570.2	19+669.9	100.2		
19+677.8	19+685.5	8.5		
POSITION TOTAL		1179	1378	
SUBTOTAL =		2558		
ROUNDING =		2		
TOTAL =		2560		

SIDEWALK

BEGIN STATION km + m	END STATION km + m	POSITION LEFT sm	POSITION RIGHT sm	REMARKS
ITEM 618.10 - PORT. CEM. CONCRETE SIDEWALK, 125mm				
2+013.7	2+092.8		125.5	
2+045.4	2+046.9		6.2	Indiv. Walk
2+063.4	2+065.0		5.3	Indiv. Walk
2+070.8	2+071.6		4.4	Indiv. Walk
2+081.6	2+082.7		6.1	Indiv. Walk
2+088.2	2+091.2		15.8	Indiv. Walk
2+102.6	2+106.4		13.5	Indiv. Walk
2+103.2	2+140.8		64.5	
2+127.6	2+128.8		4.3	Indiv. Walk
2+150.8	2+171.3		31.8	
2+163.6	2+166.3		8.0	Indiv. Walk
2+197.6	2+211.7		21.7	
2+208.2	2+209.1		6.0	Indiv. Walk
5+015.5	5+058.7	69.2		
5+051.2	5+052.3	5.2		Indiv. Walk
5+063.1	5+112.5	84.5		
5+082.6	5+089.3	16.1		Indiv. Walk
18+763.6	19+015.3		571.7	
18+920.0	18+928.0		37.3	Indiv. Walk
18+926.2	18+990.9	100.9		
18+964.8	18+965.7	1.9		Indiv. Walk
18+998.5	19+052.3	82.2		
19+019.1	19+026.9		11.9	
19+034.1	19+042.4		12.7	
19+054.4	19+060.4		9.1	
19+059.5	19+096.5	56.1		
19+067.3	19+075.5		12.6	
19+073.4	19+089.7		55.4	Indiv. Walk
19+082.5	19+122.5		66.2	
19+103.8	19+125.6	33.5		
19+114.6	19+117.2		6.5	Island
19+115.1	19+117.4	1.1		Indiv. Walk
19+115.5	19+117.2	7.7		Indiv. walk
19+131.4	19+170.6		68.7	
19+134.9	19+167.5	50.8		
19+181.9	19+222.2		76.0	
19+186.1	19+188.6	3.8		Island
19+186.2	19+188.5		3.9	Island
19+209.9	19+343.2	205.8		
19+331.5	19+332.3	1.0		Indiv. Walk
19+352.2	19+354.9	6.6		
19+363.7	19+427.7	97.1		
19+443.3	19+475.6	49.5		
19+492.0	19+554.2	97.4		
19+570.2	19+828.1	398.6		
19+211.7	19+213.6	2.6		Indiv. Walk
POSITION TOTAL		1372	1245	
SUBTOTAL =		2617		
ROUNDING =		3		
TOTAL =		2620		

SIDEWALK

BEGIN STATION km + m	END STATION km + m	POSITION LEFT sm	POSITION RIGHT sm	REMARKS
ITEM 618.11 - PORT. CEM. CONCRETE SIDEWALK, 200mm				
2+092.8	2+103.2		19.7	
2+171.3	2+197.6		44.5	
4+021.2	4+101.7	122.7		
5+058.7	5+063.1	6.8		
18+990.9	18+998.5	12.8		
19+015.3	19+019.1		5.5	
19+026.9	19+034.1		11.0	
19+042.4	19+054.4		18.4	
19+052.3	19+059.5	12.2		
19+060.4	19+067.3		17.1	
19+075.5	19+082.5		12.0	
19+096.5	19+103.8	11.0		
19+125.6	19+134.9	13.8		
19+343.2	19+352.2	12.7		
19+354.9	19+363.7	12.4		
19+475.6	19+492.0	25.3		
19+554.2	19+570.2	24.7		
POSITION TOTAL =		254	128	
SUBTOTAL =		383		
ROUNDING =		7		
TOTAL =		390		

FENCE

ITEM 620.12 - CHAIN-LINK FENCE, 1.8 M				
19+778.6	19+848.0		69.4	
19+778.6	19+791.9		83	
19+791.9	19+846.9		55	
19+846.9	19+847.0		4.5	
19+847.0	19+848.0		73.3	
SUBTOTAL =			285	
ROUNDING =			5	
TOTAL =			290	
ITEM 620.16 - GATE FOR CHAIN-LINK FENCE, 1.8 M				
19+847.0	19+847.0		4.0	
SUBTOTAL =			4	
ROUNDING =			0	
TOTAL =			4	

UNDERDRAIN

ITEM 900.640 - SPECIAL PROVISION (150 MM UNDERDRAIN CARRIER PIPE, ALL-INCLUSIVE)		
68 FLUSHING BASINS @ 1.2 M/BASIN		82
SUBTOTAL =		82
ROUNDING =		2
TOTAL =		84
ITEM 605.95 - UNDERDRAIN FLUSHING BASINS		
SUBTOTAL =		68
ROUNDING =		-
TOTAL =		68

UNDERDRAIN

BEGIN STATION km + m	END STATION km + m	PIPE NO.	POSITION	DIA. mm	LENGTH m	TRENCH* EARTH m^3	TRENCH* ROCK m^3	RURAL FB ea	URBAN FB ea	MKR PST ea
ITEM 900.640 - SPECIAL PROVISION (150 MM UNDERDRAIN PIPE, ALL-INCLUSIVE)										
1+011.0	18+935.0	U248	RT-LT	150	24.0	25.8	1.9		1	
1+018.0	1+060.0	U249	LT	150	40.0	37.7	0.7	1		1
1+021.0	1+060.0	U257A	RT	150	43.0	62.2	4.6	1		1
2+015.0	2+048.0	U236A	LT	150	33.0	32.7	1.4	1		1
2+015.0	2+048.0	U237	RT	150	35.0	36.3	0.0	1		1
2+049.2	2+105.0	U223A	RT	150	62.0	32.7	1.4	1		1
2+049.2	2+105.0	U222A	LT	150	61.0	36.3	0.0	1		1
2+105.0	2+135.0	U223	RT	150	33.0	32.0	0.0		1	
2+105.0	2+135.0	U222	LT	150	30.0	32.0	0.0		1	
2+135.0	2+208.0	U221	RT	150	74.0	21.3	0.0		1	
2+157.0	2+190.0	U218	LT	150	33.0	31.3	0.0		1	
2+190.0	5+070.0	U217	LT-RT	150	46.0	52.6	0.0		1	
2+224.8	5+110.8	U215	LT-RT	150	21.0	41.9	0.0		1	
4+015.0	4+040.0	U231	LT	150	27.0	41.9	0.0		1	
4+023.0	4+040.0	U230	RT	150	18.0	39.1	0.0		1	
4+040.0	4+088.0	U230A	RT	150	47.0	39.1	0.8	1		1
4+040.0	4+088.0	U231A	LT	150	48.0	39.1	0.8	1		1
4+088.0	2+135.0	U220	RT - LT	150	18.0	13.5	0.0	1		1
4+088.0	2+157.0	U218A	LT	150	19.0	14.9	0.7	1		1
5+015.0	5+070.0	U212	RT	150	56.0	10.9	4.0		1	
5+015.0	5+070.0	U211	LT	150	56.0	31.2	1.5		1	
5+070.0	5+089.0	U213	LT	150	19.0	16.3	7.1		1	
5+089.0	5+110.8	U214	LT	150	22.0	7.6	5.9		1	
18+531.0	18+571.0	U102	RT	150	39.0	7.2	5.6		1	
18+531.0	18+625.0	U105	LT	150	94.0	52.6	0.0	1	1	1
18+571.0	18+625.0	U104	RT	150	54.0	16.4	5.0		1	
18+625.0	18+672.0	U106	RT	150	48.0	8.7	34.7		1	
18+625.0	18+672.0	U107	LT	150	48.0	7.0	16.4		1	
18+672.0	18+722.3	U106A	RT	150	51.0	8.8	35.3	1		1
18+672.0	18+722.5	U107A	LT	150	51.0	37.7	0.0	1		1
18+723.7	18+786.0	U255A	RT	150	63.0	14.9	0.0	1		1
18+723.7	18+786.0	U256A	LT	150	63.0	7.1	0.0	1		1
18+786.0	18+835.0	U255	RT	150	49.0	13.5	0.0		1	
18+786.0	18+835.0	U256	LT	150	49.0	10.5	2.3		1	
18+835.0	18+885.0	U253	RT	150	50.0	6.7	26.7		1	
18+835.0	18+885.0	U254	LT	150	51.0	3.8	15.4		1	
18+885.0	18+936.0	U252	RT	150	50.0	15.2	36.0		1	
18+885.0	1+018.0	U251	LT	150	24.0	11.9	1.6		1	
18+935.0	18+989.0	U245	RT	150	54.0	8.6	2.0		1	
18+935.0	18+989.0	U246	LT	150	55.0	2.7	3.7		1	
18+989.0	19+035.0	U244	LT	150	46.0	0.0	23.5		1	
18+989.0	19+037.0	U243	RT	150	48.0	0.0	24.9		1	
19+085.0	19+113.0	U240A	RT	150	29.0	0.0	10.0		1	
19+113.0	19+147.5	U239	LT	150	34.0	6.2	17.9		1	
19+113.0	2+015.0	U238	RT-RT	150	14.0	0.0	20.6		1	
19+136.0	2+015.0	U236	LT	150	9.0	10.2	23.9		1	
19+136.0	19+159.0	U232A	RT	150	24.0	31.0	1.7		1	
19+147.5	19+163.0	U235	LT	150	15.0	23.0	15.4		1	
19+159.0	4+023.0	U232	RT-RT	150	19.0	27.7	11.4		1	
19+197.0	19+215.0	U228A	RT	150	19.0	10.2	6.1		1	
19+210.0	19+231.0	U225	LT	150	21.0	14.5	2.6		1	
19+215.0	5+015.0	U227	RT-RT	150	10.0	28.4	0.0		1	
19+230.5	19+285.0	U208	RT	150	55.0	13.8	3.3		1	
19+231.0	19+285.0	U224	LT	150	53.0	16.4	2.8		1	
19+285.0	19+344.0	U206	RT	150	59.0	10.9	24.6		1	
19+285.0	19+344.0	U207	LT	150	59.0	18.1	18.1		1	
19+344.0	19+374.0	U204	RT	150	30.0	3.0	31.9		1	
19+374.0	19+418.0	U204A	RT	150	44.0	35.8	9.0		1	
19+344.0	19+418.0	U205	LT	150	74.0	7.0	27.9		1	
19+418.0	19+463.0	U203	RT	150	45.0	35.8	9.0		1	
19+418.0	19+463.0	U202	LT	150	45.0	30.6	0.0		1	
19+463.0	19+535.0	U307	RT	150	72.0	29.9	0.0		1	
19+463.0	19+535.0	U308	LT	150	72.0	29.9	0.0		1	
19+535.0	19+605.0	U305	RT	150	70.0	49.8	0.0		1	
19+535.0	19+605.0	U306	LT	150	70.0	49.8	0.0		1	
19+605.0	19+646.0	U303	RT	150	42.0	51.2	0.0		1	
19+605.0	19+646.0	U304	LT	150	42.0	51.2	0.0		1	
SUBTOTAL =					2878	1546.1	500.2	15	53	15
ROUNDING =					47			-	-	
TOTAL =					2925			15	53	15

NOTES:
1. ALL UNDERDRAIN PIPE LENGTHS SOWN HAVE BEEN ROUNDED UP TO THE NEAREST WHOLE METER, FOR QUANTITY PURPOSES, PER SUBSECTION 605.05. ACTUAL PIPE LENGTHS, TO THE NEAREST TENTH METER, ARE SHOWN ON THE CONSTRUCTION PLANS.
2. TRENCH EXCAVATION QUANTITIES ARE PROVIDED FOR REFERENCE ONLY. ALL TRENCH EXCAVATION REQUIRED TO INSTALL THE UNDERDRAIN PIPE OR THE UNDERDRAIN CARRIER PIPE SHALL BE INCLUDED IN THE UNIT PRICE FOR ITEM 900.640 - SPECIAL PROVISION (150 MM UNDERDRAIN PIPE, ALL-INCLUSIVE) OR ITEM 900.640 - SPECIAL PROVISION (150 MM UNDERDRAIN CARRIER PIPE, ALL-INCLUSIVE), RESPECTIVELY.

REPLACEMENT SHEETS ISSUED 10/5/11

Stantec

PROJECT NAME: DANVILLE
PROJECT NUMBER: F EGC 028-3(32)

FILE NAME: ...\012-014 Item details 1-3.ptf
DESIGN SUPERVISOR: GARY SANTY
DESIGNED BY: STANTEC
ITEM DETAIL SHEET IDS-1
PLOT DATE: 10/4/2011
DRAWN BY: STANTEC
CHECKED BY: STANTEC
SHEET 16 OF 306

10/4/2011 1:59:37 PM V:\953\active\953100033.0192\Revised Plans\Plot Files\012-014 Item details 1-3.ptf

STATE OF VERMONT
AGENCY OF TRANSPORTATION

DRAINAGE DETAIL SHEET 1

Metric

STATION km + m	STATION km + m	POS.	PIPE NO.	INLET/OUTLET TYPE		DITCH		PIPE ARCH			PIPE		ALLOWABLE OPTIONS						PIPE OPTION	ES	PRC CB	PRC MH	DEPTH DI	CONC CLASS B	REINF STEEL	CB GRATE	CHAN ELEV	CRM	TRENCH EXCAVATION		COMM EXC	UNC CHAN EXC	STRUCT EXCAV	GRAN BKFILL STRUCT	GRAN BORR	PERM EROS MATT	STONE FILL		MARKER POSTS		GEOTEXT UNDER STONE FILL		REMARKS
				INLET	OUTLET	IN	OUT	SPAN mm	RISE mm	L m	D mm	L m	PCCSP mm	CAAP mm	RCP CL	CSP mm	CPEP SL mm	CPEP mm		ea	ea	ea	mm	m^3	kg	type	ea	m^3	EARTH m^3	ROCK m^3	m^3	m^3	m^3	m^3	m^3	m^2	m^3	type	LT ea	RT ea	m^2		
18+390.0	18+520.0	RT	101A																										-												CONST. SWALE 1. SEE SWM DETAIL 3
18+531.0	18+531.0	LT/RT	100	CB100	CB101						450	15			III		X		2		1					E			24	-									1				
18+523.0	18+531.0	RT	101	CB101	STONE		X				450	10	1.63	1.52	III		X	X	3	1	1					E			22	3							44	I		1	147		CONST. STONE FILL, TYPE I AT OUTLET
18+531.0	18+571.0	RT	102	CB102	CB101						450	39	1.63	1.52	III		X	X	3		1					E			67	5													
18+531.0	18+625.0	LT	-																										28	-							28	I			94		CONST. STONE LINED SWALE. SEE SHEET DD-1.
18+533.0	18+520.0	LT/RT	EX401																										65	2													REMOVE EXIST. 460mm CGMP & STRUCTURE
18+571.0	18+571.0	LT/RT	103	CB103	CB102						450	6			III		X		2		1					E			11	7													
18+571.0	18+571.0	LT/RT	103A	CB103A	CB103						450	6			III		X		2		1					E			12	4													
18+571.0	18+625.0	RT	104	CB105	CB103A						450	53	1.63	1.52	III		X	X	3		1					E			107	2													
18+625.0	18+625.0	LT/RT	105	CB105	CB104						450	8			III		X		2		1					E			12	5													
18+625.0	18+672.0	RT	106	CB107	CB105						450	46	1.63	1.52	III		X	X	3		1					D			70	3													
18+672.0	18+672.0	LT/RT	107	CB106	CB107						450	8			III		X		2		1					D			17	-													
18+672.0	18+672.0	LT	108	CB108	CB107						450	3	1.63	1.52	III		X	X	3		1					E			11	-									1				
18+786.0	18+786.0	LT/RT	256	CB256	CB255						450	8			III		X		2		1					E			16	6													
18+786.0	18+835.0	RT	255	CB255	CB253						450	48	1.63	1.52	III		X	X	3		1					E			12	118													
18+835.0	18+835.0	LT/RT	254	CB254	CB253						450	8			III		X		2		1					E			7	16													
18+835.0	18+885.0	RT	253	CB253	CB252						450	49	1.63	1.52	III		X	X	3		1					E			44	99													
18+885.0	18+912.5	RT	252	CB252	CB247						450	27	1.63	1.52				X	1		1					E			59	10													
18+885.0	18+885.0	LT/RT	251	CB251	CB252						450	8			III		X		2		1					E			18	5													
18+910.0	18+912.5	RT	250	-	CB247						300	3	1.63						-										4	-													CONNECT TO EXISTING CGMP
18+912.5	18+913.7	RT	247	CB247	MH247A						450	7			III		X		2		1					E			20	4													
18+913.7	18+935.0	LT	247A	MH247A	CB246						450	21	1.63	1.52				X	1			1				COVER			42	14													
18+915.0	18+912.5	LT	248	CB248	MH247A						450	11			III		X		2		1					D			20	5									1				REMOVE EXISTING PIPE & STRUCTURE
18+914.3	18+929.0	RT/LT	EX403																										51	2													REMOVE EXISTING 460 mm CGMP & STRUCTURE
18+914.4	18+937.9	LT	EX404																										54	2													
18+935.0	18+935.0	LT/RT	246	CB245	CB246						450	8			III		X		2		1					E			15	7													REMOVE EXISTING 460 mm CGMP & STRUCTURE
18+937.9	19+029.0	LT	EX405																										192	2													
18+935.0	18+989.0	LT	245	CB246	CB244						450	54	1.63	1.52				X	1		1					E			68	28													
18+989.0	18+989.0	LT/RT	244	CB243	CB244						450	8			III		X		2		1					E			13	5													
18+989.0	19+037.0	LT	243	CB244	CB241						600	45	1.63	1.52				X	1		1					E			90	5													
19+027.0	19+030.0	LT	242	CB242	CB241						450	9	1.63	1.52	III		X	X	3		1					D			15	4													REMOVE EXISTING 310 mm CGMP & STRUCTURE
19+029.0	19+038.0	LT/RT	EX406																										16	2													
19+031.0	19+037.0	LT/RT	241	CB240	CB241						450	8			III		X		2		1					E			17	3									1				
19+037.0	19+085.0	LT	240	CB241	CB240B						600	49	1.63	1.52				X	1		1					E			68	25													
19+085.0	19+085.0	RT/LT	240A	CB240A	CB240B						450	9			III		X		2		1					D			9	11													
19+085.0	19+113.0	LT	239	CB240B	CB239						600	27	1.63	1.52				X	1		1					E			9	61													
19+113.0	19+147.3	LT	239A	CB239	CB235						600	33	1.63	1.52				X	1		1					E			29	72													
19+113.0	2+013.0	LT/RT	238	CB238	CB239						450	11			III		X		2		1					E			1	25													REMOVE EXISTING 460 mm CGMP & STRUCTURE
19+123.5	19+170.5	LT/RT	EX407																										110	2													
19+136.0	19+159.0	RT	232A	CB232A	CB232						450	23	1.63	1.52				X	1		1					E			29	30													
19+147.5	19+163.0	LT	235	CB235	CB234						600	15	1.63	1.52				X	1		1					E			39	9													

ALLOWABLE PIPE OPTIONS

- #1: CAAP, PCCSP, CPEP
- #2: RCP, CPEP(SL)
- #3: CAAP, PCCSP, RCP, CPEP, CPEP(SL)
- #4: CAAP, PCCSP, RCP

CAAP	=	CORRUGATED ALUMINUM ALLOY PIPE
CPEP	=	CORRUGATED POLYETHYLENE PIPE
CPEP(SL)	=	CORRUGATED POLYETHYLENE PIPE- SMOOTH LINED
PCCSP	=	POLYMERIC COATED CORRUGATED STEEL PIPE
RCP	=	REINFORCED CONCRETE PIPE

NOTES:
1. ALL PRCCB'S AND PRCMH'S ARE 1.2 M DIAMETER UNLESS OTHERWISE NOTED.
2. ALL PIPE LENGTH SHOWN HAVE BEEN ROUNDED UP TO THE NEAREST WHOLE METER, FOR QUANTITY PURPOSES, PER SUBSECTION 601.10. ACTUAL PIPE LENGTHS, TO THE NEAREST TENTH METER, ARE SHOWN ON THE CONSTRUCTION PLANS AND DRAINAGE PROFILE SHEETS.
3. ALL TRENCH EXCAVATION EARTH OR ROCK REQUIRED FOR THE INSTALLATION OF ANY DRAINAGE PIPES SHALL BE INCLUDED IN THE UNIT PRICE BID FOR THE APPROPRIATE CONTRACT PIPE ITEM.

REPLACEMENT SHEETS ISSUED 10/05/11

Stantec

PROJECT NAME: DANVILLE
PROJECT NUMBER: F EGC 028-3(32)

FILE NAME: ...\PlotFiles\015-017 drainage.ptf
DESIGN SUPERVISOR: GARY SANTY
DESIGNED BY: STANTEC
DRAINAGE DETAIL SHEET DDS-1

PLOT DATE: 10/4/2011
DRAWN BY: STANTEC
CHECKED BY: STANTEC
SHEET 17 OF 306

10/4/2011 1:40:36 PM H:\1953\active\195300033_0192\Revised Plans\PlotFiles\015-017 drainage.ptf

STATE OF VERMONT
AGENCY OF TRANSPORTATION

DRAINAGE DETAIL SHEET 2

Metric

STATION km + m	STATION km + m	POS.	PIPE NO.	INLET/OUTLET TYPE		DITCH		PIPE ARCH			PIPE		ALLOWABLE OPTIONS						PIPE OPTION	ES	PRC CB	PRC MH	DEPTH DI	CONC CLASS B	REINF STEEL	CB GRATE	CHAN ELEV	CRM	TRENCH EXCAVATION		COMM EXC	UNC CHAN EXC	STRUCT EXCAV	GRAN BKFILL STRUCT	GRAN BORR	PERM EROS MATT	STONE FILL		MARKER POSTS		GEOTEXT UNDER STONE FILL		REMARKS
				INLET	OUTLET	IN	OUT	SPAN	RISE	L	D	L	PCCSP	CAAP	RCP CL	CSP	CPEP SL	CPEP											EARTH	ROCK									LT	RT			
								mm	mm	m	mm	m	mm	mm		mm	mm	mm		ea	ea	ea	mm	m^3	kg	type	ea	m^3	m^3	m^3	m^3	m^3	m^3	m^2	m^2	m^3	type	ea	ea	m^2		
19+186.7	19+210.0	LT	233	CB234A	CB225						600	23	1.63	1.52				X	1		1					E			62	-												
19+163.0	19+185.7	LT	234	CB234	CB234A						600	22	1.63	1.52				X	1		1					E			62	-												
19+159.0	4+023.0	RT/RT	232	CB232	CB229						450	18	1.63	1.52				X	1		1					E			44	6												REMOVE EXISTING 460 mm CGMP & STRUCTURE
19+170.5	19+221.9	RT	EX408																										143	2												
19+197.0	19+215.0	RT	228A	CB228A	CB227						450	18	1.63	1.52				X	1		1					E			53	-												
19+210.0	19+231.0	LT	225	CB225	CB224						600	20	1.63	1.52				X	1		1					E			42	-												
19+215.0	5+015.0	RT	227	CB227	CB210						450	8			III		X		2		1					E			26	-												REMOVE INLET STRUCTURE
19+221.0	19+221.0	RT	EX409																										9	2												REMOVE EXISTING 460 mm CGMP & STRUCTURE
19+222.7	19+221.0	RT	EX410																										17	2												CONSTRUCT 1.5M ID CB
5+015.0	19+231.0	LT/RT	209	CB209	CB224						450	19			III		X		2		1					E			60	-												CONSTRUCT 1.5M ID CB
19+231.0	19+285.0	LT	224	CB224	CB207						750	53			III		X		2		1					E			179	-												REMOVE EXISTING 310 mm CGMP & STRUCTURE
19+230.0	19+230.0	RT	EX411																										154	2												CONSTRUCT 1.5M ID CB
19+285.0	19+285.0	LT/RT	207	CB207	CB206						750	8			III		X		2		1					E			25	-												CONSTRUCT 1.5M ID CB
19+285.0	19+344.0	RT	206	CB206	CB204						750	58			III		X		2		1					E			168	-												REMOVE EXIST 310 mm CGMP & INLET; TRENCH EXCAVATION INCIDENTIAL TO P206
19+301.3	19+392.5	RT	EX412																										-	-												
19+344.0	19+344.0	LT/RT	205	CB205	CB204						450	8			III		X		2		1					E			24	-												CONSTRUCT 1.5M ID CB
19+374.0	19+418.0	RT	204	CB204A	CB203						750	43			III		X		2		1					E			271	-												CONSTRUCT 1.5M ID CB
19+344	19+374.0	RT	204A	CB204	CB204A						750	29			III		X		2		1					E			114	-												
19+418.0	19+418.0	LT/RT	202	CB202	CB203						450	8			III		X		2		1					E			23	-												CONSTRUCT 1.5M ID CB
19+418.0	19+463.0	RT	203	CB203	CB307						750	44	2.01	1.91	III		X	X	3		1					E			427	-												REMOVE EXIST 310 CGMP & INLET TO 22m LT; TRENCH EXCAVATION INCIDENTIAL TO P201
19+421.4	19+421.4	LT	EX413																										-	-												REMOVE EXIST 600 RCP; TRENCH EXCAVATION INCIDENTIAL TO P201
19+421.4	19+421.4	LT	EX414																										-	-												CONSTRUCT STONE FILL TYPE II OUTLET
19+421.5	19+421.5	LT/RT	201	CB201	STONE						1200	24	2.77	2.67	III				4	1	1					E			81	-							3	II	1	1	4		CONSTRUCT 1.8M ID CB
19+421.5	19+421.5	LT	201A	HDWL	CB201						1200	32	2.77	2.67	III				4					7.4	535				203	-												REPLACE EXISTING PIPE AND HEADWALL
19+463.0	19+463.0	LT/RT	308	CB308	CB307						450	8			III		X		2		1					D			22	-												CONSTRUCT 1.5M ID CB
19+463.0	19+535.0	RT	307	CB307	CB305						750	71			III		X		2		1					D			421	-												CONST. STONE LINED SWALE. SEE SHEET DD-1
19+490.0	19+667.0	LT	-																										620	-							319	II			531		
19+535.0	19+535.0	LT/RT	306	CB306	CB305						450	8			III		X		2		1					E			23	-												CONSTRUCT 1.5M ID CB
19+535.0	19+605.0	RT	305	CB305	CB303						750	69			III		X		2		1					E			199	-												
19+605.0	19+605.0	LT/RT	304	CB304	CB303						450	9			III		X		2		1					E			26	-												CONSTRUCT 1.5M ID CB
19+605.0	19+646.0	RT	303	CB303	CB301						750	40			III		X		2		1					E			120	-												
19+646.0	19+646.0	LT/RT	302	CB302	CB301						450	11			III		X		2		1					E			31	-												CONSTRUCT 1.5M ID CB
19+646.0	19+658.8	RT	301	CB301	CB301A						750	13			III		X		2		1					E			79	-												CONSTRUCT 1.5M ID CB
19+658.8	19+717.7	RT	301A	CB301A	CB301B						750	58			III		X		2		1					B			344	-										1		CONSTRUCT REINFORCED CONCRETE STRAIGHT HEADWALL
19+667.8	19+690.7	LT	300	HDWL	CB300	X					600	24	1.63	1.52	III		X	X	3		1			1.3	139	B			46	-										2		CONST. STONE LINED SWALE. SEE SHEET DD-1
19+670.0	19+803.0	RT	-																										399	-							111	I			370		CONNECT TO EXISTING CGMP
19+690.7	19+691.7	LT	300A	CB300	EXIST						600	2	1.63						-										9	-												CONSTRUCT 1.5M ID CB
19+717.7	19+781.0	RT	301B	CB301B	CB314						750	63			III		X		2		1					B			369	-										1		CONSTRUCT 1.5M ID CB
19+781.0	19+794.0	RT	314	CB314	MH315						900	69			III		X		2		1					B			490	-										1		CONST. SWALE 2A. SEE SWM DETAILS 1 & 3.

ALLOWABLE PIPE OPTIONS

- #1: CAAP, PCCSP, CPEP
- #2: RCP, CPEP(SL)
- #3: CAAP, PCCSP, RCP, CPEP, CPEP(SL)
- #4: CAAP, PCCSP, RCP

CAAP	=	CORRUGATED ALUMINUM ALLOY PIPE
CPEP	=	CORRUGATED POLYETHYLENE PIPE
CPEP(SL)	=	CORRUGATED POLYETHYLENE PIPE- SMOOTH LINED
PCCSP	=	POLYMERIC COATED CORRUGATED STEEL PIPE
RCP	=	REINFORCED CONCRETE PIPE

NOTES:
1. ALL PRCCB'S AND PRCMH'S ARE 1.2 M DIAMETER UNLESS OTHERWISE NOTED.
2. ALL PIPE LENGTH SHOWN HAVE BEEN ROUNDED UP TO THE NEAREST WHOLE METER, FOR QUANTITY PURPOSES, PER SUBSECTION 601.10. ACTUAL PIPE LENGTHS, TO THE NEAREST TENTH METER, ARE SHOWN ON THE CONSTRUCTION PLANS AND DRAINAGE PROFILE SHEETS.
3. ALL TRENCH EXCAVATION EARTH OR ROCK REQUIRED FOR THE INSTALLATION OF ANY DRAINAGE PIPES SHALL BE INCLUDED IN THE UNIT PRICE BID FOR THE APPROPRIATE CONTRACT PIPE ITEM.

REPLACEMENT SHEETS ISSUED 10/05/11

Stantec

PROJECT NAME: DANVILLE
PROJECT NUMBER: F EGC 028-3(32)

FILE NAME: ...\PlotFiles\015-017 drainage.ptf
DESIGN SUPERVISOR: GARY SANTY
DESIGNED BY: STANTEC
DRAINAGE DETAIL SHEET DDS-2
PLOT DATE: 10/4/2011
DRAWN BY: STANTEC
CHECKED BY: STANTEC
SHEET 18 OF 306

10/4/2011 1:40:09 PM W:\1953\active\195300033.0092\Revised Plans\PlotFiles\015-017 drainage.ptf

STATE OF VERMONT
AGENCY OF TRANSPORTATION

DRAINAGE DETAIL SHEET 3

Metric

STATION km + m	STATION km + m	POS.	PIPE NO.	INLET/OUTLET TYPE		DITCH		PIPE ARCH			PIPE		ALLOWABLE OPTIONS						PIPE OPTION	ES	PRC CB	PRC MH	DEPTH DI	CONC CLASS B	REINF STEEL	CB GRATE	CHAN ELEV	CRM	TRENCH EXCAVATION		COMM EXC	UNC CHAN EXC	STRUCT EXCAV	GRAN BKFILL STRUCT	GRAN BORR	PERM EROS MATT	STONE FILL		MARKER POSTS		GEOTEXT UNDER STONE FILL		REMARKS
				INLET	OUTLET	IN	OUT	SPAN	RISE	L	D	L	PCCSP	CAAP	RCP CL	CSP	CPEP SL	CPEP										EARTH	ROCK									LT	RT			
								mm	mm	m	mm	m	mm	mm		mm	mm	mm		ea	ea	ea	mm	m^3	kg	type	ea	m^3	m^3	m^3	m^3	m^3	m^3	m^3	m^2	m^3	type	ea	ea	m^2		
19+787.0	19+803.0	RT	312																									168	-												
19+794.0	19+808.1	RT	315	MH315	POND						900	14			III		X		2	1		1				COVER		74	-							99	II		2	165	
																																									CONSTRUCT DETENTION POND OUTLET
																																									STRUCTURE. SEE SWM-2 FOR DETAILS.
19+835.0	19+865.9	RT	311	MH311	STONE		X				750	32			III		X		2	1		1		2		COVER		168	-										1		CONSTRUCT (2) ANTI-SEEP COLLARS ON P312
19+844.1	19+858.0	RT	316	-	-	X	X				450	14	1.63	1.52	III		X	X	3	2								22	-										2		CONSTRUCT REINFORCED CONCRETE STRAIGHT
19+846.0	19+866.0	RT	313	HDWL	STONE		X				900	22			III		X		2	1				4.3	364			67	-							142	II		2	237	HEADWALL. CONSTRUCT STONE FILL TYPE II AT INLET & OUTLET
																																									CONSTRUCT SWALE 2B. SEE SWM DETAILS 1 & 3
19+858.0	19+979.0	RT	317																									399	-												
1+021.0	18+915.0	RT/LT	257	CB257	CB248						450	10	1.63	1.52	III		X	X	3		1					D		31	-										1		
1+018.0	1+021.0	LT/RT	249	CB249	CB257						450	11			III		X		2		1					E		25	6									1			
2+015.0	2+015.0	RT/LT	237	CB237	CB236						450	7			III		X		2		1					D		9	16												
2+015.0	19+136.0	LT/RT	236	CB236	CB232A						450	8	1.63	1.52	III		X	X	3		1					D		14	19												
2+105.0	2+105.0	RT/LT	223	CB223	CB222						450	7			III		X		2		1					D		10	5												
2+105.0	2+135.0	LT	222	CB222	CB220						450	27	1.63	1.52	III		X	X	3		1					D		33	10												
2+135.0	2+135.0	RT/LT	221	CB221	CB220						450	7			III		X		2		1					D		15	-												
2+135.0	2+157.0	LT	220	CB220	CB218						450	21			III		X		2		1					D		39	-												
2+157.0	2+190.0	LT	218	CB218	CB217						450	32	1.63	1.52	III		X	X	3		1					D		39	17												
2+190.0	5+110.6	LT/LT	217	CB217	CB214						450	15			III		X		2		1					D		39	9												
2+208.0	5+110.6	RT/LT	216	CB216	CB214						450	8			III		X		2		1					D		14	13												
2+224.8	5+110.6	LT/LT	215	CB215	CB214						450	20	1.63	1.52	III		X	X	3		1					D		27	10												
4+015.0	19+197.0	LT/RT	228	CB228	CB228A						450	12	1.63	1.52				X	1		1					D		38	-												
4+023.0	4+015.0	RT/LT	229	CB229	CB228						450	15	1.63	1.52				X	1		1					D		57	-												
4+023.0	4+040.0	RT	230	CB230	CB229						450	16	1.63	1.52	III		X	X	3		1					E		47	10												
4+040.0	4+040.0	LT/RT	231	CB231	CB230						450	6			III		X		2		1					E		14	11												
5+015.0	5+015.0	RT/LT	210	CB210	CB209						450	5			III		X		2		1					D		15	-												
5+015.0	5+070.0	LT	211	CB211	CB209						450	55			III		X		2		1					E		102	2												
5+070.0	5+070.0	RT/LT	212	CB212	CB211						450	6			III		X		2		1					E		13	1												
5+070.0	5+089.0	LT	213	CB213	CB211						450	18	1.63	1.52	III		X	X	3		1					E		45	-												
5+089.0	5+110.6	LT	214	CB214	CB213						450	21	1.63	1.52	III		X	X	3		1					D		61	3												
PROJECT TOTALS								NO OPTION			300	3	1.63								80	2		15	1038	4-B		8483	749						0	183	I	8	13	1548	
																										22-D									563	II				
								NO OPTION			600	2	1.63													54-E														
																										3-COVER														
								PIPE OPTION 1			450	109	1.63	1.52				X		3																						
											600	94	1.63	1.52				X		-																						
																				-																					
								PIPE OPTION 2			450	435			III		X			-																						
											600	120			III		X			-																						
											750	537			III		X			1																						
											900	105			III		X			2																						
								PIPE OPTION 3			450	423	1.63	1.52	III		X	X		-																						
											600	44	1.63	1.52	III		X	X		-																						
											750	44	2.01	1.91	III		X	X		-																						
								PIPE OPTION 4			1200	56	2.77	2.67	III					1																						

ALLOWABLE PIPE OPTIONS

- #1: CAAP, PCCSP, CPEP
- #2: RCP, CPEP(SL)
- #3: CAAP, PCCSP, RCP, CPEP, CPEP(SL)
- #4: CAAP, PCCSP, RCP

CAAP	=	CORRUGATED ALUMINUM ALLOY PIPE
CPEP	=	CORRUGATED POLYETHYLENE PIPE
CPEP(SL)	=	CORRUGATED POLYETHYLENE PIPE- SMOOTH LINED
PCCSP	=	POLYMERIC COATED CORRUGATED STEEL PIPE
RCP	=	REINFORCED CONCRETE PIPE

NOTES:
1. ALL PRCCB'S AND PRCMH'S ARE 1.2 M DIAMETER UNLESS OTHERWISE NOTED.
2. ALL PIPE LENGTH SHOWN HAVE BEEN ROUNDED UP TO THE NEAREST WHOLE METER, FOR QUANTITY PURPOSES, PER SUBSECTION 601.10. ACTUAL PIPE LENGTHS, TO THE NEAREST TENTH METER, ARE SHOWN ON THE CONSTRUCTION PLANS AND DRAINAGE PROFILE SHEETS.
3. ALL TRENCH EXCAVATION EARTH OR ROCK REQUIRED FOR THE INSTALLATION OF ANY DRAINAGE PIPES SHALL BE INCLUDED IN THE UNIT PRICE BID FOR THE APPROPRIATE CONTRACT PIPE ITEM.

REPLACEMENT SHEETS ISSUED 10/05/11

Stantec

PROJECT NAME: DANVILLE
PROJECT NUMBER: F EGC 028-3(32)

FILE NAME: ...\PlotFiles\015-017 drainage.ptf
DESIGN SUPERVISOR: GARY SANTY
DESIGNED BY: STANTEC
DRAINAGE DETAIL SHEET DDS-3

PLOT DATE: 10/4/2011
DRAWN BY: STANTEC
CHECKED BY: STANTEC
SHEET 19 OF 306

10/4/2011 11:40:43 PM W:\1953\active\195300033_0192\Revised Plans\PlotFiles\015-017 drainage.ptf

1/18/2011 1:49:11 PM v:\1953\active\195310033_10192\Highway\PlotFiles\018 earthworks.ptf

STATE OF VERMONT
AGENCY OF TRANSPORTATION

EARTHWORKS

Metric

STATION km + m	DIST m	TOTAL EXCAVATION EARTH AND ROCK AREA m²	TOTAL EXCAVATION EARTH AND ROCK VOLUME m³	ROCK EXCAVATION AREA m²	ROCK EXCAVATION VOLUME m³	EMBANKMENT AREA m²	EMBANKMENT VOLUME m³	AREA m²	VOLUME m³
U.S. ROUTE 2									
18+508		3				1			
	12		49				12		
18+520		5				1			
	20		120				40		
18+540		7				3		CUT	509
	20		140				60	ROCK	0
18+560		7				3		R.FAC	0.495
	20		120				100	FILL	392
18+580		5				7		F.FAC	1.15
	20		80				180	EX. C	58
18+600		3				11			
	20		90				240		
18+620		6				13			
	20		170				130		
18+640		11				0			
	20		230						
18+660		12				0			
	20		190				30		
18+680		7				3			
	20		130				80	CUT	1860
18+700		6				5		ROCK	60
	20		130				90	R.FAC	0.495
18+720		7				4		FILL	1050
	20		160				140	F.FAC	1.15
18+740		9				10		EX. C	682
	20		200				200		
18+760		11		0		10			
	20		250		10		120		
18+780		14		1		2			
	20		310		50		20		
18+800		17		4		0			
	20		340		110				
18+820		17		7		0			
	20		250		70		5		
18+840		8		0		1			
	20		130				25		
18+860		5				2			
	20		100				50		
18+880		5				3			
	20		140				40	CUT	1970
18+900		9				1		ROCK	180
	20		180				10	R.FAC	0.495
18+920		9				0		FILL	140
	20		190					F.FAC	1.15
18+940		10				0		EX. C	1898
	20		220						
18+960		12				0			
	20		230						
18+980		11				0			
	20		190				10		
19+000		8				1			
	20		160				20		
19+020		8				1			
	20		190				10		
19+040		11				0			
	20		240						
19+060		13				0			
	20		420						
19+080		29				0			
	20		510					CUT	3540
19+100		22		0		0		ROCK	120
	20		450		60			R.FAC	0.495
19+120		23		6		0		FILL	30
	20		410		60			F.FAC	1.15
19+140		18		0		0		EX. C	3565
	20		330						
19+160		15				0			
	20		360						
19+180		21				0			
	20		470						
19+200		26				0			
	20		470						
19+220		21				0			
	20		360						
19+240		15				0			
	20		280						
19+260		13				0			
	20		230						
19+280		10				0			
	20		190					CUT	2390
19+300		9				0		ROCK	0
	20		190					R.FAC	0.495
19+320		10				0		FILL	80
	20		190					F.FAC	1.15
19+340		9				0		EX. C	2298
	20		180				10		
19+360		9				1			
	20		160				20		
19+380		7				1			
	20		140				50		
19+400		7				4			
	20		150				150		

STATION km + m	DIST m	TOTAL EXCAVATION EARTH AND ROCK AREA m²	TOTAL EXCAVATION EARTH AND ROCK VOLUME m³	ROCK EXCAVATION AREA m²	ROCK EXCAVATION VOLUME m³	EMBANKMENT AREA m²	EMBANKMENT VOLUME m³	AREA m²	VOLUME m³
19+420		8				11			
	20		230				120		
19+440		15				1			
	20		250				10		
19+460		10				0			
	20		220						
19+480		12				0			
	20		220					CUT	2050
19+500		10				0		ROCK	0
	20		200					R.FAC	0.495
19+520		10				0		FILL	330
	20		200				10	F.FAC	1.15
19+540		10				1		EX. C	1671
	20		200				20		
19+560		10				1			
	20		190				10		
19+580		9				0			
	20		190				10		
19+600		10				1			
	20		200				20		
19+620		10				1			
	20		200				30		
19+640		10				2			
	20		220				40		
19+660		12				2			
	20		240				20		
19+680		12				0			
	20		220				10	CUT	1570
19+700		10				1		ROCK	0
	20		190				20	R.FAC	0.495
19+720		9				1		FILL	210
	20		120				20	F.FAC	1.15
19+740		3				1		EX. C	1329
	20		60				20		
19+760		3				1			
	20		60				20		
19+780		3				1			
	20		60				10		
19+800		3				0			
	20		70						
19+820		4				0			
	20		80						
19+840		4				0			
	20		80					CUT	425
19+860		4				0		ROCK	0
	20		80					R.FAC	0.495
19+880		4				0		FILL	0
	20		90					F.FAC	1.15
19+900		5				0		EX. C	425
	10		25						
19+910		0				0			
PARK STREET									
2+008		0				0			
	12		96						
2+020		16				0			
	20		270						
2+040		11				0		CUT	846
	20		190					ROCK	0
2+060		8				0		R.FAC	0.495
	20		150					FILL	0
2+080		7				0		F.FAC	1.15
	20		140					EX. C	846
2+100		7				0			
	20		130						
2+120		6				0			
	20		160						
2+140		10				0			
	20		170						
2+160		7				0			
	20		160					CUT	935
2+180		9				0		ROCK	0
	20		150					R.FAC	0.495
2+200		6				0		FILL	0
	20		100					F.FAC	1.15
2+220		4				0		EX. C	935
	20		60						
2+240		2				0			
	5		5						
2+245		0				0			
PEACHAM ROAD									
4+008		35				0			
	12		306				18		
4+020		16				3			
	20		260				180		
4+040		10				15			
	20		190				170		
4+060		9				2			
	20		230				20		
4+080		14				0		CUT	1471
	20		230					ROCK	0

STATION km + m	DIST m	TOTAL EXCAVATION EARTH AND ROCK AREA m²	TOTAL EXCAVATION EARTH AND ROCK VOLUME m³	ROCK EXCAVATION AREA m²	ROCK EXCAVATION VOLUME m³	EMBANKMENT AREA m²	EMBANKMENT VOLUME m³	AREA m²	VOLUME m³
4+100		9				0		R.FAC	0.495
	2		24					FILL	388
4+102		15				0		F.FAC	1.15
	8		120					EX. C	1025
4+110		15				0			
	10		95						
4+120		4				0			
	4		16						
4+124		4				0			
SMITH STREET									
5+010		16				0			
	10		140						
5+020		12				0			
	20		180				40		
5+040		6				4			
	20		100				180		
5+060		4				14		CUT	608
	20		70				180	ROCK	0
5+080		3				4		R.FAC	0.495
	20		60				80	FILL	561
5+100		3				4		F.FAC	1.15
	10		45				70	EX. F	-37
5+110		6				10			
	2		13				11		
5+112		7				1			
WALDEN HILL ROAD									
1+010		6				1			
	10		40				10		
1+020		2				1			
	20		70				10	CUT	215
1+040		5				0		ROCK	0
	20		90					R.FAC	0.495
1+060		4				0		FILL	20
	8		15					F.FAC	1.15
1+068		0				0		EX. C	192
HILL STREET									
3+000								CUT	59
			59					ROCK	0
3+028								R.FAC	0.495
								FILL	0
								F.FAC	1.15
								EX. C	59
HIGHLAND AVENUE									
6+010		7				1		CUT	40
	10		40				5	ROCK	0.00
6+020		1				0		R.FAC	0.495
								FILL	5
								F.FAC	1.15
								EX. C	34
MOUNTAIN VIEW DRIVE									
7+000								CUT	86
			86					ROCK	0.00
7+028								R.FAC	0.495
								FILL	0
								F.FAC	1.15
								EX. C	86
DRIVES			1010				76	CUT	1010
								ROCK	0.00
								R.FAC	0.495
								FILL	76
								F.FAC	1.15
								EX. C	923
INDIVIDUAL WALKWAYS									
			26		9			CUT	26
								ROCK	9.00
								R.FAC	0.495
								FILL	0
								F.FAC	1.15
								EX. C	30
STORMWATER MANAGEMENT POND									
19+910			2660				662	CUT	2660
								ROCK	0.00
								R.FAC	0.495
								FILL	662
								F.FAC	1.15
								EX. C	1899

SUMMARY AND BALANCES

STATION TO STATION km + m	km + m	TOT EXC. EARTH & ROCK m³	ROCK EXCAV m³	EMBANK m³	EXCESSES CUT	EXCESSES FILL	ACUMULATIVE EXCESSES CUT	ACUMULATIVE EXCESSES FILL
U.S. ROUTE 2								
18+508	18+600	509	0	392	58		58	
18+600	18+800	1860	60	1050	682		740	
18+800	19+000	1970	180	140	1898		2638	
19+000	19+200	3540	120	30	3565		6203	
19+200	19+400	2390	0	80	2298		8501	
19+400	19+600	2050	0	330	1671		10172	
19+600	19+800	1570	0	210	1329		11501	
19+800	19+910	425	0	0	425		11926	
PARK STREET								
2+008	2+100	846	0	0	846		12772	
2+100	2+245	935	0	0	935		13707	
PEACHAM ROAD								
4+008	4+124	1471	0	388	1025		14732	
SMITH STREET								
5+010	5+112	608	0	561		-37	14695	
WALDEN HILL ROAD								
1+000	1+068	215	0	20	192		14887	
HILL STREET								
3+000	3+028	59	0	0	59		14946	
HIGHLAND AVENUE								
6+010	6+020	40	0	5	34		14980	
MOUNTAIN VIEW DRIVE								
7+000	7+028	86	0	0	86		15066	
DRIVEWAYS & INDIVIDUAL WALKWAYS								
		1036	9	76	953		16019	
STORMWATER MANAGEMENT POND								
19+910		2660	0	662	1899		17918	
TOTALS=		**22270**	**369**	**3944**				

REMARKS

EARTH AND ROCK EXCAVATION	22270
SOLID ROCK EXCAVATION	369
EARTH EXCAVATION	21901
PLANIMETERED FILL	3944
LESS FACTORED SOLID ROCK (1.30)	480
LESS DISPLACEMENT OF ANY LARGE STRUCTURES	0
NET PLANIMETERED FILL	3465
FACTOR	1.15
PLANIMETERED FILL INCLUDING FACTOR	3984
MATERIALS AVAILABLE FOR FILLS	
EARTH EXCAVATION	21901
TRENCH EXCAVATION (DRAIN. SUMMARY)(EARTH)	8451
UNDERDRAIN EXCAVATION (EARTH)	1692
STRUCTURE EXCAVATION	28
TOTAL MATERIAL AVAILABLE FOR FILL	32072
TOTAL FILL INCLUDING FACTOR	3984
TOTAL MATERIAL FOR FILL	32072
BORROW	0
EXCESS EXCAVATION	28087

C + 0.495R - 1.15 F

C = QUANTITY OF EARTH & ROCK EXCAVATION

R = QUANTITY OF ROCK EXCAVATION

F = QUANTITY OF FILL EXCAVATION

Stantec

PROJECT NAME: DANVILLE
PROJECT NUMBER: F EGC 028-3(32)

FILE NAME: ...\PlotFiles\018 earthworks.ptf
DESIGN SUPERVISOR: GARY SANTY
DESIGNED BY: STANTEC
EARTHWORK SUMMARY SHEET EWS-1

PLOT DATE: 1/18/2011
DRAWN BY: STANTEC
CHECKED BY: STANTEC
SHEET 20 OF 306

STATE OF VERMONT
AGENCY OF TRANSPORTATION

RIGHT - OF - WAY DETAIL SHEET

TABLE OF PROPERTY ACQUISITION

PARCEL NO.	PROPERTY OWNER	SHEET NO.	BEGINNING STATION	ENDING STATION	TAKE	REMAINDER	RIGHT			RECORDING DATA					REMARKS
					AREA±	AREA±	TYPE	(T)/(P)	AREA ±	TITLE	DATE	TOWN / CITY	BOOK	PAGE	
1	ZANGLA, JEFFREY S.	97	18+506.52, LT.	18+521.25, LT.			CONST.	(T)	6 SM	WD	1/19/2010	DANVILLE	138	182-183	65 SF - INC ERO CNTRL & PDF
	TYRA-ZANGLA, SUSAN		18+523.70, LT.				DRIVE	(T)							4.9m (16') GRAVEL, MM0407
			18+526.22, LT.	18+547.06, LT.			CONST.	(T)	39 SM						420 SF - INC ERO CNTRL & PDF
			18+531.00, LT.				DI & CUL.	(P)	10 SM						108 SF
			18+531.00, LT.				CUL	(P)							
			18+531.00, LT.	18+547.06, LT.			DIT. & DR.	(P)	18 SM						194 SF
2	LAMOTHE, DOUGLAS R.	97	18+513.18, RT.	18+527.28, RT.			CONST.	(T)	10 SM	GTR	2/12/2010	DANVILLE	138	414-416	108 SF - INC ERO CNTRL & PDF
			18+532.98, RT.	18+587.84, RT.			CONST.	(T)	120 SM						1292 SF INC ERO CNTRL & PDF
			18+544.68, RT.	18+587.84, RT.			SLOPE	(T)	200 SM						2153 SF
			18+567.80, RT.	18+584.70, RT.			LANDSCAPE	(T)							TREES
3A	DRISCOLL, MARGARET A.	97, 98	18+557.83, LT.	18+622.02, LT.	10 SM					WD	3/23/2010	DANVILLE	139	53-54	108 SF
			18+547.06, LT.	18+557.83, LT.			DIT. & DR.	(P)	4 SM						43 SF
			18+547.06, LT.	18+645.44, LT.			CONST.	(T)	120 SM						1292 SF - INC ERO CNTRL & PDF
			18+567.80, LT.	18+584.70, LT.			LANDSCAPE	(T)							TREES
			18+574.38, LT.	18+619.06, LT.			DIT. & DR.	(P)	28 SM						301 SF
			18+598.51, LT.	18+660.89, LT.			LANDSCAPE	(T)							TREES
			18+626.84, LT.	18+645.44, LT.			SLOPE	(T)	36 SM						388 SF
3B		98	18+641.59, LT.	18+681.75, LT.	5 SM										54 SF
			18+648.40, LT.				DRIVE	(T)							4.0m (13') BITUMINOUS MM0415
			18+648.90, LT.	18+681.96, LT.			CONST.	(T)	72 SM						775 SF - INC ERO CNTRL & PDF
			18+671.36, LT.				DI	(P)							
			18+664.34, LT.	18+680.44, LT.			SLOPE	(T)	1 SM						11 SF
3C		97, 98	18+546.83, LT.	18+681.75, LT.	0.10 HA		ALL R, T & I								US RT. 2 HWY. EASE. (0.25 AC)
4	STILLSON, MATTHEW C. &	97, 98	18+587.75, RT.	18+682.20, RT.	0.07 HA		ALL R, T & I			WD	6/1/2010	DANVILLE	139	562-564	US RT. 2 HWY. EASE. (0.17 AC)
	SMITH, CATHERINE ANN		18+587.83, RT	18+635.58, RT.			SLOPE	(T)	347 SM						3735 SF
			18+587.83, RT	18+639.72, RT.			CONST.	(T)	0.07 HA						0.17 AC - INC ERO CNTRL & PDF
			18+599.04, RT.				LANDSCAPE	(T)							TREE
			18+621.30, RT.	18+634.10, RT.			LANDSCAPE	(T)							TREES
			18+636.44, RT	18+642.18, RT.											EXCEPT & RESERVE - SHED
			18+660.50, RT.				DRIVE	(T)							10.0m (32.8') GRAVEL, MM0416
			18+665.57, RT.	18+682.21, RT.			SLOPE	(T)	40 SM						431 SF
			18+665.77, RT.	18+682.21, RT.			CONST.	(T)	50 SM						538 SF - INC ERO CNTRL & PDF
			18+676.35, RT.				REMOVE	(T)							SIGN - PERSONAL
			18+677.70, RT.				LANDSCAPE	(T)							TREE

REPLACEMENT SHEETS ISSUED 02/24/2012

TABLE OF REVISIONS

REVISION NO.	SHEET NO.	DESCRIPTION	DATE
1	91	PARCEL NO. 30B: CHANGE BEGINNING STATION FROM	9/23/2009
		19+124.53 LT. TO 19+131.20 LT., AT "ALL R, T, & I"	
		PER C.O. 9567	
		MADE BY: STANTEC APPROVED BY: HP	
2	93	PARCEL NO. 38B: CHANGE ENDING STATION FROM	9/23/2009
		19+440.11 LT. TO 19+440.12 LT., AT "ALL R, T, & I"	
		PER C.O. 9568	
		MADE BY: STANTEC APPROVED BY: HP	
3	93	PARCEL NO. 39: CHANGE BEGINNING STATION FROM	9/23/2009
		19+440.12 LT. TO 19+424.94 LT.; AREA FROM 241 SM TO	
		353 SM AND 2594 SF TO 3821 SF; ADD "& TH 114" TO THE	
		REMARKS COLUMN PER C.O. 9569	
		MADE BY: STANTEC APPROVED BY: HP	
4	94	PARCEL 44A: CHANGE TAKE FROM 127 SM TO 347 SM AND	9/23/2009
		AND 1367 SF TO 3735 SF PER C.O. 9570	
		MADE BY: STANTEC APPROVED BY: HP	
5	84, 86	PARCEL NO. 8: NAME CHANGE, ADD SECOND TRUST INFO	12/7/2009
	99, 101	TO PLANS AND DETAIL SHEETS PER C.O. 9576	
		MADE BY: STANTEC APPROVED BY: HP	
6	25, 99	PARCEL NO. 8: EXTEND CURB FROM STA. 18+95 LT. TO EDGE	12/7/2009
		OF DRIVE AT STA. 1+030 +/- RT. NO NEW RIGHTS REQ'D.	
		PER C.O. 9577	
		MADE BY: STANTEC APPROVED BY: HP	
7	52, 93	PARCEL 38A: REMOVE THREE TREES FROM FRONTAGE	12/7/2009
	104	PER C.O. 9578	
		MADE BY: STANTEC APPROVED BY: HP	
8	105	PARCEL 39: LOCATE EXISTING TREE NEAR DRIVEWAY AND	12/7/2009
		ADD NOTE ABOUT REMOVING TWO EXISTING TREES	
		NO NEW RIGHTS NEEDED NO C.O. ISSUED	
		MADE BY: STANTEC APPROVED BY: HP	
9	84,85	PARCEL 3: CHANGE NAME TO NEW OWNER,	12/20/2009
	97,98	DRISCOLL, MARGARET A.	
		PER C.O. 9588	
		MADE BY: STANTEC APPROVED BY: HP	
10	95, 106	PARCEL 46: CHANGE NAME TO NEW OWNER,	1/22/2010
	107	DREW, EVERETT W. & NORMA S. TRUSTEES OF THE	
		EVERETT W. DREW AND NORMA S. DREW REVOCABLE TRUST	
		PER C.O. 9594	
		MADE BY: STANTEC APPROVED BY: HP	
11		C.O. #9595 VOIDED	1/22/2010
		MADE BY: STANTEC APPROVED BY: HP	
12	91,107	PARCEL NO. 32A: DELETED THE SIGN LOCATED	1/19/2010
		AT STA. 19+215 LT., DELETE INSTALL (P) AT STA 19+215	
		LT. ON DETAIL SHEET 107, DELETE INSTALL (P) ON	
		LAYOUT SHEET 102	
		PER C.O. 9596	
		MADE BY: STANTEC APPROVED BY: HP	
13	94, 105	PARCEL 42: CHANGE NAME TO NEW OWNER, WAS	1/22/2010
		DREW, BLAINE EVERETT & PAMELA JEAN, NOW	
		DREW, BLAINE EVERETT	
		PER C.O. 9597	
		MADE BY: STANTEC APPROVED BY: HP	
14	102	PARCEL 32A: CONSTRUCT A CONCRETE WALK FROM OWNERS	3/4/2010
		PORCH STEPS TO THE PROPOSED SIDEWALK BETWEEN STA	
		19+211.5 AND 19+213.5	
		PER C.O. 9606	
		MADE BY: STANTEC APPROVED BY: HP	

PLAN LEGEND

EXISTING RIGHT-OF-WAY
TAKING WITH ACCESS
TAKING WITHOUT ACCESS
CZ — CLEAR ZONE
P / L — PROPERTY LINE
TOE OF SLOPE
TOP OF CUT
SR (P) — SLOPE RIGHT
CONST.(T) — CONSTRUCTION RIGHT

(P) -PERMANENT
(T) -TEMPORARY
DR. -DRAINAGE RIGHT
DIT. -DITCHING RIGHT
CH. -CHANNEL RIGHT
DRIVE -DRIVE RIGHT
CUL. -CULVERT RIGHT
C&T -CLEARING & TRIMMING RIGHT
SR -SLOPE RIGHT
UE -UTILITY EASEMENT

SCF -SOIL CONTROL FILTER
HH -HAND HOLE
SL -STREET LIGHT

APPROVED: HARRY PETROVS DATE: JULY 9, 2009
CHIEF, PLANS & TITLES

Stantec

PROJECT NAME: DANVILLE
PROJECT NUMBER: F EGC 028-3(32)

FILE NAME: ...\PlotFiles\ROW\ROW details.ptf
PLOT DATE: 2/24/2012
DESIGN SUPERVISOR: GARY SANTY
DRAWN BY: STANTEC
DESIGNED BY: STANTEC
CHECKED BY: STANTEC
RIGHT-OF-WAY DETAIL RDS-1
SHEET 21 OF 306

2/24/2012 3:52:43 PM V:\953\active\95300033.0092\Highway\PlotFiles\ROW\ROW details.ptf

STATE OF VERMONT
AGENCY OF TRANSPORTATION

RIGHT - OF - WAY DETAIL SHEET

TABLE OF PROPERTY ACQUISITION

PARCEL NO.	PROPERTY OWNER	SHEET NO.	BEGINNING STATION	ENDING STATION	TAKE	REMAINDER	RIGHT			RECORDING DATA					REMARKS
					AREA±	AREA±	TYPE	(T)/(P)	AREA ±	TITLE	DATE	TOWN / CITY	BOOK	PAGE	
5	LEVINE, STEVE B. &	98, 99	18+681.75, LT.	18+782.16, LT.	0.08 HA		ALL R, T & I			WD	2/8/2010	DANVILLE	138	368-369	US RT. 2 HWY. EASE. (0.20 AC)
	MALM, ELAINE		18+682.21, LT.	18+712.99, LT.			CONST.	(T)	42 SM						452 SF INC ERO CNTRL & PDF
			18+737.76, LT.	18+745.41, LT.			CONST.	(T)	12 SM						129 SF INC ERO CNTRL & PDF
			18+738.64, LT.	18+744.05, LT.			SLOPE	(T)	12 SM						129 SF
			18+753.74, LT.				INSTALL	(T)							WATER SHUTOFF & RELATED PIPE
			18+762.40, LT.				DRIVE	(T)							5.1m (17') CONC/GRAV, MM0422
			18+765.63, LT.	18+782.16, LT.			CONST.	(T)	18 SM						194 SF INC ERO CNTRL & PDF
			18+768.86, LT.				REMOVE	(T)							SIGN - PERSONAL
			18+770.67, LT.	18+782.16, LT.			SLOPE	(T)	29 SM						312 SF
6A	MARTHA JANE BEATTIE KITCHEL TRUST	99	18+878.24, LT.	WHR 1+057.92	360 SM					WD	2/9/2010	DANVILLE	138	400-401	3875 SF - WALDEN HILL ROAD (WHR)
	MARTHA JANE BEATTIE KITCHEL &		18+782.23, LT.	18+785.49, LT.			SLOPE	(T)	4 SM						43 SF
	ROBERT G. KITCHEL, TRUSTEES		18+782.29, LT.	18+789.00, LT.			CONST.	(T)	18 SM						194 SF INC ERO CNTRL & PDF
			18+791.50, LT.				DRIVE	(T)							3.5m (11') GRAVEL, MM 0424
			18+792.33, LT.	18+816.27, LT.			CONST.	(T)	22 SM						237 SF INC ERO CNTRL & PDF
			18+794.53, LT.	18+803.13, LT.			SLOPE	(T)	10 SM						108 SF
			18+828.70, LT.				DRIVE	(T)							9.0m (30') GRAVEL, MM 0426
			18+856.00, LT.	18+886.78, LT.			CONST.	(T)	16 SM						172 SF INC ERO CNTRL & PDF
			18+866.10, LT.	18+883.10, LT.			LANDSCAPE	(T)							TREES
6B		99	18+782.16, LT	18+915.38, LT.	0.11 HA		ALL R, T & I								US RT. 2 HWY. & TH 14 EASE. (0.27 AC)
7A	TOWN OF DANVILLE SCHOOL DISTRICT	98-101	18+716.82, RT.	18+941.38, RT.	198 SM					WD	5/6/2010	DANVILLE	139	409-412	2131 SF
			18+682.21, RT.	18+781.33, RT.			SLOPE	(T)	0.05 HA						0.12 AC
			18+682.24, RT.	18+797.91, RT.			CONST.	(T)	0.08 HA						0.20 AC INC ERO CNTRL & PDF
			18+692.40, RT.	18+778.10, RT.			LANDSCAPE	(T)							TREES
			18+737.39, RT.	18+878.08, RT.			INSTALL	(T)							WATERLINE
			18+750.00, RT.	18+875.00, RT.			INSTALL	(T)							WATER SHUTOFF & PIPING, FOUNTAIN
			18+762.55, RT.	18+803.22, RT.			REMOVE	(T)	0.06 HA						GRAVEL DRIVE (0.15 AC)
			18+762.55, RT.	18+941.20, RT.			CONST.	(T)	0.18 HA						0.44 AC INC ERO CNTRL & PDF
			18+763.53, RT.	18+804.21, RT.			WALK	(T)							CUL-DE-SAC 1.5M (5') CONCRETE
			18+768.53, RT.				INSTALL	(T)							GRANITE POST #1
			18+782.42, RT.				INSTALL	(T)							GRANITE POST #2
			18+787.11, RT.	18+920.51, RT.			REMOVE	(T)							FENCE
			18+787.11, RT.	18+805.00, RT.			INSTALL	(T)							FENCE
			18+786.66, RT.				INSTALL	(T)							GRANITE POST #3
			18+791.48, RT.				INSTALL	(T)							GRANITE POST #4
			18+792.29, RT.				REMOVE	(T)							TREE
			18+792.80, RT.	18+809.80, RT.			LANDSCAPE	(T)							TREES
			18+793.26, RT.				REMOVE	(T)							TREE
			18+801.75, RT	18+908.50, RT.			INSTALL	(T)							FENCE & GATE
			18+825.70, RT	18+898.50, RT.			LANDSCAPE	(T)							TREES
			18+832.74, RT.	18+915.15, RT.			SLOPE	(T)	158 SM						1701 SF
			18+905.94, RT.				INSTALL	(T)							5.2m (17') DOUBLE GATE
			18+906.00, RT.				DRIVE	(T)							4.0m (13') GRAVEL, MM 0431
			18+908.50, RT.	18+920.51, RT.			INSTALL	(T)							FENCE
			18+915.32, RT.												SIGN - DO NOT DISTURB
			18+919.87, RT.	18+921.85, RT.			REMOVE & RESET	(T)							EXISTING LIGHT & POLE
			18+920.07, RT.	18+928.02, RT.			WALK	(T)							SIDEWALK 1.5M (5') CONCRETE
			18+921.85, RT.				REMOVE & RESET	(T)							EXISTING LIGHT & POLE
			18+922.11, RT.				REMOVE	(T)							SIDEWALK 2.1M (7') CONCRETE
			18+922.97, RT.	18+936.30, RT.			REMOVE	(T)							FENCE
			18+923.43, RT.				REMOVE	(T)							LIGHT & POLE
			18+924.50, RT.	18+930.00, RT.			INSTALL	(P)							HH-8 AND RELATED CONDUIT
			18+924.50, RT.				LANDSCAPE	(T)							TREE
			18+937.20, RT.				LANDSCAPE	(T)							TREE
			18+932.23, RT.	18+943.57, RT.			INSTALL	(T)							DRAINAGE PIPE CONNECTION
			18+936.25, RT.				INSTALL	(T)							SANITARY SEWER MANHOLE
7B		98, 99, 101	18+682.20, RT.	18+941.57, RT.	0.20 HA		ALL R, T & I								US RT. 2 HWY. EASE. (0.49 AC)
8	MARTHA JANE BEATTIE KITCHEL TRUST	99,101	18+915.16, LT.	18+950.11, LT.	265 SM		ALL R, T & I			WD	2/9/2010	DANVILLE	138	402-403	US RT. 2 & T.H. 14 HWY. EASE. (2852 SF)
	MARTHA JANE BEATTIE KITCHEL &		18+927.25, LT.	18+950.11, LT.			CONST.	(T)	37 SM						398 SF INC ERO CNTRL & PDF
	ROBERT G. KITCHEL, TRUSTEES														
	AND														
	ROBERT G. KITCHEL TRUST														
	ROBERT G. KITCHEL & MARTHA														
	JANE BEATTIE KITCHEL, TRUSTEES														

TABLE OF REVISIONS

REVISION NO.	SHEET NO.	DESCRIPTION	DATE
15	101	PARCEL 15A: CHANGED DRIVE WIDTHS @ STA 19+031 FROM	3/10/2010
		7.2M TO 12M AND DRIVE @ 19+048 FROM 12M TO 7.2M	
		ELIMINATE "REMOVE AND RESET" OF SIGN @ STA 19+040 RT	
		RELOCATE PROPOSED TREE TO STA 19+040	
		PER C.O. 9623	
		MADE BY: STANTEC APPROVED BY: HP	
16	94,105	PARCEL 41: ADDED GRAVEL DRIVE (12.2M) @ STA 19+483.00	
	106	(MM 0467) LT.	
		ADDED SLEEVE FOR FUTURE SEWER CONNECTION @ STA 19+652	
		ADDED FUTURE WATER LINE CONNECTION @ STA 19+655.00 LT.	
		PER C.O. 9626	
		MADE BY: STANTEC APPROVED BY: HP	
17	92,102	PARCEL 33: ADDED "EXCEPT & RESERVE" FOR PORCH WITHIN ROW.	
		PER C.O. 9641	
		MADE BY: STANTEC APPROVED BY: HP	
18	1	PARCELS 44A, 44B: CORRECTED THE ROW LINE FOR THE	7/11/2011
	86,94	SOUTHERLY EDGE OF ROUTE 2 TO MATCH EXISTING	
	106, 107	MONUMENTS. RESULTED IN CHANGE FOR CONST(T) AT	
		STA 19+643.15 RT; DIT&DR(P) AT STA 19+649.60 RT.	
		PARCEL 44B, CHANGED AREA FROM 0.56HA TO 0.52HA.	
		CHANGED ROW PROJECT END STATION	
		PER C.O. 9751	
		MADE BY: STANTEC APPROVED BY: HP	
19	93, 104	PARCEL 38A: ADDED INSTALL & MAINTAIN (P) FOR	7/21/2011
		HEADWALL AND CULVERT; ADDED REMOVE(T) FOR AN EXISTING 24" CULVERT	
		PER C.O. 9750	
		MADE BY: STANTEC APPROVED BY: HP	
20	86	PARCEL 7A: ADDED INSTALL(T) FOR A DRAINAGE PIPE AND	11/4/2011
	98-101	AN INSTALL(T) FOR A SANITARY SEWER MANHOLE	
		PER C.O. 9745	
		MADE BY: STANTEC APPROVED BY: HP	
21	88	PARCEL 17A: ADDED UTILITY(P) UNDERGROUND UTILITIES	11/4/2011
	101,102	& APPURTENANCES	
		PER C.O. 9746	
		MADE BY: STANTEC APPROVED BY: HP	
22	89	PARCEL 19A: REVISED STATIONING FOR SPRINKLER	11/4/2011
	102	CONNECTION(T)	
		PER C.O. 9747	
		MADE BY: STANTEC APPROVED BY: HP	
23	90	PARCEL 19K: CORRECTED ROW LINE FOR THE SOUTHERLY	7/11/2011
	107	EDGE OF ROUTE 2 TO MATCH EXISTING MONUMENTS. MAP	
		CORRECTION AND REVISE END STATIONINGS.	
		PER C.O. 9748	
		MADE BY: STANTEC APPROVED BY: HP	
24	90	PARCEL 20A: ADDED UTILITY(P) UNDERGROUND UTILITIES	11/4/2011
	102,103	& APPURTENANCES	
		PER C.O. 9749	
		MADE BY: STANTEC APPROVED BY: HP	
25	95	PARCEL 46: ADDED (2) DROP INLETS AT (2) SEPARATE	10/26/2011
	106,107	LOCATIONS & RELOCATED PIPE(P)	
		PER C.O. 9752	
		MADE BY: STANTEC APPROVED BY: HP	
26	90	PARCEL 20A: ADDED NOTE FOR PLANTING OF A NEW APPLE	2/8/2012
	102	TREE IN A LOCATION TO BE SPECIFIED BY THE PROPERTY	
		OWNER AND THE RESIDENT ENGINEER	
		PER C.O. 9762	
		MADE BY: STANTEC APPROVED BY: HP	

REPLACEMENT SHEETS ISSUED 02/24/2012

PLAN LEGEND

EXISTING RIGHT-OF-WAY
TAKING WITH ACCESS
TAKING WITHOUT ACCESS
CLEAR ZONE (CZ)
PROPERTY LINE (P / L)

TOE OF SLOPE
TOP OF CUT
SLOPE RIGHT (SR (P))
CONSTRUCTION RIGHT (CONST. (T))

(P) -PERMANENT
(T) -TEMPORARY
DR. -DRAINAGE RIGHT
DIT. -DITCHING RIGHT
CH. -CHANNEL RIGHT
DRIVE -DRIVE RIGHT
CUL. -CULVERT RIGHT
C&T -CLEARING & TRIMMING RIGHT
SR -SLOPE RIGHT
UE -UTILITY EASEMENT

SCF -SOIL CONTROL FILTER
HH -HAND HOLE
SL -STREET LIGHT

APPROVED: HARRY PETROVS DATE: JULY 9, 2009
CHIEF, PLANS & TITLES

Stantec

PROJECT NAME: DANVILLE
PROJECT NUMBER: F EGC 028-3(32)

FILE NAME: ...\PlotFiles\ROW\ROW details.ptf
PLOT DATE: 2/24/2012
DESIGN SUPERVISOR: GARY SANTY
DRAWN BY: STANTEC
DESIGNED BY: STANTEC
CHECKED BY: STANTEC
RIGHT-OF-WAY DETAIL RDS-2
SHEET 22 OF 306

2/24/2012 3:53:45 PM V:\9530\active\95300033.0092\Highway\PlotFiles\ROW\ROW details.ptf

STATE OF VERMONT
AGENCY OF TRANSPORTATION

RIGHT - OF - WAY DETAIL SHEET

TABLE OF PROPERTY ACQUISITION

PARCEL NO.	PROPERTY OWNER	SHEET NO.	BEGINNING STATION	ENDING STATION	TAKE	REMAINDER	RIGHT			RECORDING DATA					REMARKS
					AREA±	AREA±	TYPE	(T)/(P)	AREA ±	TITLE	DATE	TOWN / CITY	BOOK	PAGE	
9A	WILLIS, STEVEN N.	101	18+941.20, RT.	18+964.11, RT.	23 SM					WD	1/26/2010	DANVILLE	138	306-307	248 SF
			18+941.01, RT.	18+958.21, RT.			CONST.	(T)	7 SM						75 SF INC ERO CNTRL & PDF
			18+943.59, RT.	18+959.30, RT.			SLOPE	(T)	5 SM						54 SF
			18+943.59, RT	18+956.54, RT.			REMOVE & RESET	(T)							FENCE
			18+945.03, RT.				INSTALL	(T)							WATER SHUTOFF & RELATED PIPING
			18+958.46, RT.	18+958.63, RT.			REMOVE	(T)							WOOD RETAINING WALL
			18+961.80, RT.				DRIVE	(T)							2.7m (9') BITUMINOUS , MM0434
			18+963.02, .RT	18+964.02, RT.			CONST.	(T)	1 SM						11 SF INC ERO CNTRL & PDF
9B		101	18+941.38, RT	18+964.23, LT.	170 SM		ALL R, T & I								US RT. 2 HWY. EASE. 1830 SF ±
10A	CHILDS, GAIL M.	101	18+964.02,RT	18+994.62, RT.	15 SM					WD	4/23/2010	DANVILLE	139	244	161 SF
			18+968.30, RT	18+978.83, RT.			SLOPE	(T)	13 SM						140 SF
			18+963.93, RT.	18+980.38, RT.			CONST.	(T)	18 SM						194 SF INC ERO CNTRL & PDF
			18+966.47, RT.				INSTALL	(T)							WATER SHUTOFF & RELATED PIPING
			18+971.00, RT.				LANDSCAPE	(T)							TREE
			18+980.80, RT.				DRIVE	(T)							3.6m (12') BITUMINOUS, MM0436
			18+982.77, RT.	18+994.62, RT.			CONST.	(T)	5 SM						54 SF INC ERO CNTRL & PDF
			18+987.00, RT.				REMOVE	(T)							FIRE HYDRANT
10B		101	18+964.11, RT.	18+994.62, RT.	230 SM		ALL R, T & I								US RT. 2 HWY. EASE. 2476 SF ±
11	BENOIT, RICHARD M., JR. & JANICE E.	101	18+950.11, LT.	18+989.71, LT.	301 SM		ALL R, T & I			WD	7/12/2010	DANVILLE	140	179-180	US RT. 2 HWY. EASE. (3240 SF)
			18+950.11, LT.	18+985.70, LT.			INSTALL	(T)							WATER SHUTOFF & RELATED PIPING
			18+958.40, LT.				DRIVE	(T)							4.9m (16') GRAVEL, MM0434
			18+985.37, LT.				LANDSCAPE	(T)							TREE
			18+985.66, LT	18+989.41, LT.			CONST	(T)	2 SM						22 SF INC ERO CONTRL & PDF
12	GRIGGS, HOLLIS WILBUR & PASTOR-GRIGGS JACQUELINE	101	18+993.59, RT.	19+016.39, RT.								DANVILLE			ROW IN COMMON WITH PARCEL 13 FOR DRIVE
13	THOMAS, WILSON S. & LOCKE, ABBEY L.	101	18+994.62, RT.	19+015.56, RT.	157 SM		ALL R, T & I			WD	4/6/2010	DANVILLE	139	165-166	US RT. 2 HWY. EASE. 1690 SF ±
			18+994.62, RT.	19+015.56, RT.			INSTALL	(T)							WATER SHUTOFF & RELATED PIPING
			18+994.66, RT.	19+003.37, RT.			SLOPE	(T)	3 SM						32 SF
			19+007.00, RT.				DRIVE	(T)							7.2m (24') GRAVEL, MM0437
															ROW IN COMMON WITH PARCEL 12
			19+010.19, RT.	19+015.54, RT.			SLOPE	(T)	3 SM						32 SF
			19+015.01, RT.				INSTALL	(T)							WATER SHUTOFF & RELATED PIPING
14A	CALKINS, GARREN R. & KAREN G.	101	18+996.85, LT.	19+024.74, LT.	6 SM					WD	2/9/2010	DANVILLE	138	405-407	65 SF
			18+989.66, LT.	18+990.05, LT.			CONST.	(T)	1 SM						11 SF INC ERO CNTRL & PDF
			18+989.67, LT.	19+024.74, LT.			INSTALL	(T)							WATER SHUTOFF & RELATED PIPING
			18+994.70, LT.				DRIVE	(T)							7.6m (25') GRAVEL, MM0437
			18+998.52,LT.	19+024.59, LT.			SLOPE	(T)	27 SM						291 SF
			18+998.52, LT.	19+024.59, LT.			CONST.	(T)	63 SM						678 SF INC ERO CNTRL & PDF
			19+007.95, LT.				LANDSCAPE	(T)							TREE
			19+014.64, LT.				INSTALL	(P)							SIGN
			19+017.00, LT.				INSTALL	(T)							HYDRANT
14B		101	18+989.67, LT.	19+024.74, LT.	265 SM		ALL R, T & I					DANVILLE			US RT. 2 HWY. EASE. 2852 SF ±

TABLE OF REVISIONS

REVISION NO.	SHEET NO.	DESCRIPTION	DATE

REPLACEMENT SHEETS ISSUED 02/24/2012

PLAN LEGEND

EXISTING RIGHT-OF-WAY
TAKING WITH ACCESS
TAKING WITHOUT ACCESS
CLEAR ZONE (CZ)
PROPERTY LINE (P/L)
TOE OF SLOPE
TOP OF CUT
SLOPE RIGHT (SR (P))
CONSTRUCTION RIGHT (CONST. (T))

(P) -PERMANENT
(T) -TEMPORARY
DR. -DRAINAGE RIGHT
DIT. -DITCHING RIGHT
CH. -CHANNEL RIGHT
DRIVE -DRIVE RIGHT
CUL. -CULVERT RIGHT
C&T -CLEARING & TRIMMING RIGHT
SR -SLOPE RIGHT
UE -UTILITY EASEMENT
SCF -SOIL CONTROL FILTER
HH -HAND HOLE
SL -STREET LIGHT

APPROVED: HARRY PETROVS DATE: JULY 9, 2009
CHIEF, PLANS & TITLES

Stantec

PROJECT NAME: DANVILLE
PROJECT NUMBER: F EGC 028-3(32)

FILE NAME: ...\PlotFiles\ROW\ROW details.ptf
DESIGN SUPERVISOR: GARY SANTY
DESIGNED BY: STANTEC
RIGHT-OF-WAY DETAIL RDS-3
PLOT DATE: 2/24/2012
DRAWN BY: STANTEC
CHECKED BY: STANTEC
SHEET 23 OF 306

2/24/2012 3:54:49 PM V:\9530\active\95300033.0092\Highway\PlotFiles\ROW\ROW details.ptf

STATE OF VERMONT
AGENCY OF TRANSPORTATION

RIGHT - OF - WAY DETAIL SHEET

TABLE OF PROPERTY ACQUISITION

PARCEL NO.	PROPERTY OWNER	SHEET NO.	BEGINNING STATION	ENDING STATION	TAKE	REMAINDER	RIGHT			RECORDING DATA					REMARKS
					AREA±	AREA±	TYPE	(T)/(P)	AREA ±	TITLE	DATE	TOWN / CITY	BOOK	PAGE	
15A	AUGERI & SONS, LLC	101	19+045.64, RT.	19+058.28, RT.	2 SM					WD	5/24/2010	DANVILLE	139	499-500	22 SF
	d/b/a DANVILLE SERVICE CENTER		19+020.17, RT.	19+058.28, RT.			INSTALL	(T)							WATER SHUTOFF & RELATED PIPING
			19+028.10, RT.				DRIVE	(T)							DRIVE 12.0m (39') BITUMINOUS , MM0439
			19+025.00,RT.				LANDSCAPE	(T)							TREE
			19+050.90, RT.				DRIVE	(T)							7.2m(24') GRAVEL, MM0440
			19+058.28, RT.				REMOVE & RESET	(T)							IRON PIN
15B		101	19+020.18, RT.	19+058.26, RT.	286 SM		ALL R, T & I								US RT. 2 HWY. EASE. 3078 SF ±
16A	COBB, STEVEN A.	101	19+024.69, LT.	19+045.22, LT.	3 SM					WD	1/26/2010	DANVILLE	138	308-309	32 SF
	d/b/a DANVILLE INN		19+024.14, LT.	19+045.59, LT.			CONST.	(T)	39 SM						420 SF INC. EROSION CONTROL & PDF
			19+024.69, LT.	19+034.66, LT.			SLOPE	(T)	3 SM						32 SF
			19+024.74, LT.	19+060.46, LT.			INSTALL	(T)							WATER SHUTOFF & RELATED PIPING
			19+025.20, LT.	19+043.00, LT.			LANDSCAPE	(T)							TREES
			19+027.03, LT.				DI. & CUL.	(P)							
			19+032.00, LT.				INSTALL	(P)							SIGN
			19+055.80, LT.				DRIVE	(T)							7.2m(24') GRAVEL, MM0440
16B		101	19+024.74, LT.	19+060.46, LT.	270 SM		ALL R, T & I								US RT. 2 HWY. EASE. 2906 SF ±
17A	PASSUMPSIC SAVINGS BANK	101, 102	19+058.26, RT.	19+094.86, RT.	68 SM					WD	2/3/2010	DANVILLE	138	344-346	732 SF
			19+017.30, RT.				DRIVE	(T)							3.6m(12') BITUMINOUS, MM0438
			19+058.28, RT.	19+094.83, RT.			INSTALL	(P)							SL-44 AND RELATED CONDUIT
			19+058.28, RT.	19+094.85, RT.			INSTALL	(T)							UNDERGROUND UTILITIES
			19+058.80, RT.				INSTALL	(T)							STUB POLE AND ANCHOR
			19+063.80, RT.				DRIVE	(T)							6.9m(23') BITUMINOUS & CURB, MM0441
			19+069.35, RT.	19+090.00, RT.			INSTALL	(T)							CURB, PARKING, CONCRETE WALK
			19+079.40, RT				DRIVE	(T)							7.8m(25') BITUMINOUS , MM0442
			19+083.93, RT.				INSTALL	(P)							SIGN
			19+084.97, RT.				LANDSCAPE	(T)							SHRUB
			19+085.16, RT.				REMOVE	(T)							TREE
			19+093.04, RT.				INSTALL	(P)							SIGN
			19+058.28, RT.	19+094.85, RT.			UTILITY	(P)	134 SM						UNDERGROUND UTILITIES AND APPURTENANCES, 1442 SF
17B		101	19+015.54, RT.	19+020.18, RT.	36 SM		ALL R, T & I								US RT. 2 HWY. EASE. 388 SF ±
17C		101, 102	19+057.92, LT.	19+094.86, RT.	278 SM		ALL R, T & I								US RT. 2 HWY. EASE. 2992 SF ±
18	60 ROUTE 2 WEST, LLC	101, 102	19+060.46, LT.	19+095.65, LT.	258 SM		ALL R, T & I			WD	1/26/2010	DANVILLE	138	310-312	US RT. 2 HWY. EASE. 2777 SF ±
			19+060.46, LT.	19+095.65, LT.			INSTALL	(T)							WATER SHUTOFF & RELATED PIPING
			19+067.80, LT.	19+078.90, LT.			LANDSCAPE	(T)							TREES
			19+086.45, LT				REMOVE	(T)							SIGN - NO PARKING
			19+084.80, LT.	19+086.60, LT.			REMOVE	(T)							EXISTING CONCRETE SIDEWALK
			19+085.70, LT.	19+090.50, LT.			REMOVE	(T)							EXISTING STONE WALL
			19+088.20, LT.				DRIVE	(T)							3.6 M (12') GRAVEL, MM0442
			19+091.50, LT	19+091.90, LT			CONST.	(T)							RELOCATED STONE WALL
			19+091.90, LT.	19+092.30, LT.			REMOVE	(T)							EXIST. ACCESS DRIVE ACROSS PARCEL 19A

TABLE OF REVISIONS

REVISION NO.	SHEET NO.	DESCRIPTION	DATE

REPLACEMENT SHEETS ISSUED 02/24/2012

PLAN LEGEND

EXISTING RIGHT-OF-WAY
TAKING WITH ACCESS
TAKING WITHOUT ACCESS
CLEAR ZONE (CZ)
PROPERTY LINE (P / L)
TOE OF SLOPE
TOP OF CUT
SLOPE RIGHT (SR (P))
CONSTRUCTION RIGHT (CONST. (T))

(P) -PERMANENT
(T) -TEMPORARY
DR. -DRAINAGE RIGHT
DIT. -DITCHING RIGHT
CH. -CHANNEL RIGHT
DRIVE -DRIVE RIGHT
CUL. -CULVERT RIGHT
C&T -CLEARING & TRIMMING RIGHT
SR -SLOPE RIGHT
UE -UTILITY EASEMENT

SCF -SOIL CONTROL FILTER
HH -HAND HOLE
SL -STREET LIGHT

APPROVED: HARRY PETROVS DATE: JULY 9, 2009
CHIEF, PLANS & TITLES

Stantec

PROJECT NAME: DANVILLE
PROJECT NUMBER: F EGC 028-3(32)

FILE NAME: ...\PlotFiles\ROW\ROW details.ptf
DESIGN SUPERVISOR: GARY SANTY
DESIGNED BY: STANTEC
RIGHT-OF-WAY DETAIL RDS-4

PLOT DATE: 2/24/2012
DRAWN BY: STANTEC
CHECKED BY: STANTEC
SHEET 24 OF 306

2/24/2012 3:55:48 PM V:\9530\active\95300033.0092\Highway\PlotFiles\ROW\ROW details.ptf

STATE OF VERMONT
AGENCY OF TRANSPORTATION

RIGHT - OF - WAY DETAIL SHEET

TABLE OF PROPERTY ACQUISITION

PARCEL NO.	PROPERTY OWNER	SHEET NO.	BEGINNING STATION	ENDING STATION	TAKE	REMAINDER	RIGHT			RECORDING DATA					REMARKS
					AREA±	AREA±	TYPE	(T)/(P)	AREA ±	TITLE	DATE	TOWN / CITY	BOOK	PAGE	
19A	TOWN OF DANVILLE (TOWN HALL)	102	19+110.00, LT.	19+131.20, LT.	25 SM					QCD	10/7/2009	DANVILLE	137	128-132	269 SF
			19+092.30, LT.	19+095.30, LT.			REMOVE	(T)							EX. ACCESS DRIVE TO PARCEL 18
			19+094.79, LT.	19+131.20, LT.			INSTALL	(T)							UTILITY CONNECTION(S)
			19+097.30, LT.	19+106.10, LT.			INSTALL	(T)							SPRINKLER CONNECTION & PIPING
			19+094.79, LT.	19+131.20, LT.			INSTALL	(T)							WATER SHUTOFF & RELATED PIPING
			19+100.10, LT.				DRIVE	(T)							7.2m (24') BITUMINOUS, MM0443
			19+118.00, LT.				INSTALL	(P)							SL-43 & RELATED CONDUIT
			19+122.85, LT.				REMOVE	(T)							SIGN
			19+130.24, LT.												DRIVE, 4.5m(14.8') GRAVEL MM0444 (SHARED W/30A)
19B	TOWN OF DANVILLE (DANVILLE GREEN)	102, 103	19+115.85, RT.	19+240.68, RT.	0.06 HA										0.15 AC
			19+116.56, RT.	19+240.68, RT.			INSTALL	(T)							UNDERGROUND UTILITIES
			19+116.56, RT.	19+240.68, RT.			SLOPE	(T)	0.80 HA						1.98 AC (ALL SLOPE AREAS ON GREEN)
			19+116.56, RT.	19+240.68, RT.			INSTALL	(T)							GRANITE POSTS
			19+116.56, RT.	19+240.68, RT.			INSTALL	(T)							LIGHT POLES
			19+116.56, RT.	19+240.68, RT.			INSTALL	(T)							WATER SYSTEM IMPROVEMENTS
			19+116.56, RT.	19+240.68, RT.			INSTALL	(T)							PARK BENCHES
			19+116.56, RT.	19+240.68, RT.			LANDSCAPE	(T)							SHRUBS
			19+116.56, RT.	19+240.68, RT.			INSTALL	(P)							STREET LIGHTS/HANDHOLES/CONDUIT
			19+116.56, RT.	19+119.41, RT.			CUL.	(P)							PARK ST.
			19+116.74, RT.	19+240.68, RT.			CONST	(T)	0.92 HA						2.27 AC ± INC ERO CNTRL & PDF
			19+126.50, RT.	19+235.50, RT.			LANDSCAPE	(T)							TREES
			19+159.17, RT.	19+188.97, RT.			INSTALL	(P)							SIGNALIZATION EQUIPMENT - INCLUDES STRIPING
			19+160.53, RT.	19+190.92, RT.			CUL.	(P)							PEACHAM RD.
			19+189.92, RT.	SS 5+082.60,RT.			REMOVE	(T)							SMITH ST. (SS) - BRAINERD ST. PAVEMENT
			19+194.29, RT.	19+200.03, RT.			INSTALL	(T)							FIELD STONE WALLS
			19+221.73, RT.	19+229.84, RT.			CUL.	(P)							SMITH ST.
			PR 4+072.23, LT.	PS 2+182.76, RT.			INSTALL	(T)							PARK ST. (PS) - FIELD STONE WALLS
			PR 4+077.28, RT.				INSTALL	(T)							PEACHAM RD. (PR) - BANDSTAND
			PR 4+011.11, RT.	PR 4+021.19, RT.			WALK	(T)							SIDEWALK 1.5M (5') CONCRETE
			PR 4+012.52, LT.	PR 4+101.84, LT.			WALK	(T)							SIDEWALK 1.5M (5') CONCRETE
			PR 4+012.44, CL	PR 4+132.02, CL			APPROACH	(T)							PEACHAM RD.
			PS 2+010.00, LT.	PS 2+160.00, LT.			INSTALL	(T)							UTILITY CONNECTION
			PS 2+010.26, RT.	PS 2+140.80, RT.			WALK	(T)							SIDEWALK 1.5M (5') CONCRETE
			PS 2+010.81, CL	PS 2+245.00, CL			APPROACH	(T)							PARK ST. (INC. PARKING AREA)
			PS 2+076.80, RT.				DRIVE	(T)							4.4m (14.4') GRAVEL
			PS 2+096.70, RT.				DRIVE	(T)							9.3m (30.5') GRAVEL
			PS 2+119.50, RT.				DRIVE	(T)							2.6m (8.5') GRAVEL
			PS 2+150.82, RT.	PS 2+171.04, RT.			WALK	(T)							SIDEWALK 1.5M (5') CONCRETE
			PS 2+184.20, RT.				DRIVE	(T)							26.6m (87.2') GRAVEL
			PS 2+197.80, RT.	PS 2+211.83, RT.			WALK	(T)							SIDEWALK 1.5M (5') CONCRETE
			PS 2+224.70, RT.				DRIVE	(T)							4.7m (15.4') PAVED
			SS 5+011.59, RT.	SS 5+017.06, RT.			WALK	(T)							SIDEWALK 1.5M (5') CONCRETE
			SS 5+015.28, LT.	19+204.68, RT.			INSTALL	(T)							PORCH SUPPORTS
			SS 5+015.53, LT.	SS 5+112.45, LT.			WALK	(T)							SIDEWALK 1.5M (5') CONCRETE
			SS 5+060.70, LT.				DRIVE	(T)							4.9m (16.0') GRAVEL
			SS 5+080.17, LT.	SS 5+089.32, LT.			WALK	(T)							SIDEWALK 1.5M (5') CONC. & ACCESS PAD
			SS 5+010.76, CL	SS 5+115.96, CL			APPROACH	(T)							SMITH ST. (INC. PARKING AREA)
19C	TOWN OF DANVILLE (RT 2 / TOWN HALL) TOWN OF DANVILLE (RT 2)	102	19+094.79, LT.	19+131.20, LT.	267 SM		ALL R, T & I								US RT. 2 HWY. EASE. 2874 SF ±
19D		102	19+115.85, RT.	19+240.68, RT.	0.11 HA		ALL R, T & I								US RT. 2 HWY. EASE. (0.27 AC)
19E	TOWN OF DANVILLE (RT 2 / TH 14)	99	18+915.16, LT.	18+930.10, LT.	112 SM		ALL R, T & I								US RT. 2 HWY. EASE. 1206 SF ±
			18+908.18, LT.	18+915.46, LT.			CUL.	(P)							
			18+920.50, LT.				LANDSCAPE	(T)							TREE
			WHR 1+008.69, CL	WHR 1+075.50, CL			APPROACH	(T)							TH14 - WALDEN HILL RD.
19F	TOWN OF DANVILLE (RT 2 / TH 2)	102	19+164.29, LT.	19+180.32, LT.	115 SM		ALL R, T & I								US RT. 2 HWY. EASE. 1238 SF ±
			19+164.80, LT.	19+180.32, LT			INSTALL	(P)							SIGNALIZATION EQUIPMENT, UNDERGROUND POWER & STRIPING
			HS 3+008.72, CL	HS 3+028.00, CL			APPROACH	(T)							TH 2 - HILL ST. (HS)
19G	TOWN OF DANVILLE (RT 2 / TH 131)	104	19+424.94, LT.	19+440.12, LT.	115 SM		ALL R, T & I								US RT. 2 HWY. EASE. 1238 SF ±
			HA 6+007.63, CL	HA 6+027.50, CL			APPROACH	(T)							TH 131 - HIGHLAND AVE. (HA)
PARCEL 19 CONTINUED ON NEXT SHEET															

TABLE OF REVISIONS

REVISION NO.	SHEET NO.	DESCRIPTION	DATE

REPLACEMENT SHEETS ISSUED 02/24/2012

PLAN LEGEND

- EXISTING RIGHT-OF-WAY
- TAKING WITH ACCESS
- TAKING WITHOUT ACCESS
- CLEAR ZONE (CZ)
- PROPERTY LINE (P L)
- TOE OF SLOPE
- TOP OF CUT
- SLOPE RIGHT (SR (P))
- CONSTRUCTION RIGHT (CONST.(T))

(P) -PERMANENT
(T) -TEMPORARY
DR. -DRAINAGE RIGHT
DIT. -DITCHING RIGHT
CH. -CHANNEL RIGHT
DRIVE -DRIVE RIGHT
CUL. -CULVERT RIGHT
C&T -CLEARING & TRIMMING RIGHT
SR -SLOPE RIGHT
UE -UTILITY EASEMENT

SCF -SOIL CONTROL FILTER
HH -HAND HOLE
SL -STREET LIGHT

APPROVED: HARRY PETROVS DATE: JULY 9, 2009
CHIEF, PLANS & TITLES

Stantec

PROJECT NAME: DANVILLE
PROJECT NUMBER: F EGC 028-3(32)

FILE NAME: ...\PlotFiles\ROW\ROW details.ptf
DESIGN SUPERVISOR: GARY SANTY
DESIGNED BY: STANTEC
RIGHT-OF-WAY DETAIL RDS-5

PLOT DATE: 2/24/2012
DRAWN BY: STANTEC
CHECKED BY: STANTEC
SHEET 25 OF 306

2/24/2012 3:56:47 PM V:\9530033\active\9530033.0092\Highway\PlotFiles\ROW\ROW details.ptf

STATE OF VERMONT
AGENCY OF TRANSPORTATION

RIGHT - OF - WAY DETAIL SHEET

TABLE OF PROPERTY ACQUISITION

PARCEL NO.	PROPERTY OWNER	SHEET NO.	BEGINNING STATION	ENDING STATION	TAKE	REMAINDER	RIGHT			RECORDING DATA					REMARKS
					AREA±	AREA±	TYPE	(T)/(P)	AREA ±	TITLE	DATE	TOWN / CITY	BOOK	PAGE	
PARCEL 19 CONTINUED FROM PREVIOUS SHEET															
19H	TOWN OF DANVILLE (RT 2 / TH 116)	104	19+426.81, RT.	19+441.90, RT.	114 SM		ALL R, T & I					DANVILLE			US RT. 2 HWY. EASE. 1227 SF ±
			MVA 7+007.48, CL	MVA 7+027.50, CL			APPROACH	(T)							TH 116 - MOUNTAIN VIEW AVE.
19I	TOWN OF DANVILLE (GRAVEL DRIVE)	105	19+551.43, RT.	19+566.57, LT.	3 SM										32 SF
			19+560.70, RT.				DRIVE	(T)							7.2m (24') GRAVEL, MM 0472
19J	TOWN OF DANVILLE (RT 2 / GRAVEL DRIVE)	105	19+551.43, RT.	19+566.57, LT.	111 SM		ALL R, T & I					DANVILLE			US RT. 2 HWY. EASE. 1195 SF ±
19K	TOWN OF DANVILLE (49.5' ROW)	107	19+843.94, RT.	19+859.25, RT.			CUL.	(P)							
			19+846.76, RT.	19+859.19, RT.			CUL.	(P)							
			19+843.37, RT.	19+859.40, RT.			SLOPE	(T)	449 SM						4833 SF
			19+851.10, RT.												DRIVE, 5.8m (19') GRAVEL, MM 0490
20A	LADIES LIBRARY ASSOCIATION, INC. AND	102, 103	19+094.83 RT.	19+116.56 RT.	109 SM					WD	12/17/2009	DANVILLE	137	681-683	1173 SF
	LADIES LIBRARY ASSOCIATION OF		19+094.78 RT.	PS 2+030.22, RT.			CONST .	(T)	39 SM						420 SF INC ERO. CTRL & PDF
	DANVILLE n/k/a POPE MEMORIAL LIBRARY		19+094.80 RT.	19+116.99 RT.			SLOPE	(T)	45 SM						484 SF
	ASSOCIATION, INC.		19+094.83, RT.	19+116.56, RT.			LANDSCAPE	(T)							APPLE TREE
			19+094.85, RT.	19+116.83, RT.			INSTALL	(T)							UNDERGROUND UTILITIES
			19+094.85, RT.	PS 2+020.00, RT.			INSTALL	(P)							STREET LIGHTS, HAND HOLES, AND RELATED CONDUIT
			19+096.03, RT.				INSTALL	(T)							WATER SHUTOFF & RELATED PIPING
			19+097.03, RT.				INSTALL	(T)							WATER SHUTOFF & RELATED PIPING
			19+113.39, RT.				REMOVE & RESET	(T)							FLAG POLE
			PS 2+010.00, RT.	PS 2+056.38, RT.			INSTALL	(T)							UTILITY CONNECTION(S)
			19+094.80, RT.	19+117.77, RT.			UTILITY	(P)	176 SM						UNDERGROUND UTILITIES AND APPURTENANCES 1894 SF
20B		102	19+094.50, LT.	19+115.91, LT.	156 SM		ALL R, T & I								US RT. 2 HWY. EASE. 1679 SF ±
21	HAMILTON HOUSE BED & BREAKFAST, LLC	103	PS 2+056.38, RT.	PS 2+079.51, RT.			INSTALL	(T)		GTR	12/31/2009	DANVILLE	138	60-61	UTILITY CONNECTION(S)
22	METHODIST SOCIETY IN DANVILLE	103	PS 2+079.51, RT.	PS 2+094.86, RT.			INSTALL	(T)		GTR	2/11/2010	DANVILLE	138	411-412	UTILITY CONNECTION(S)
	a/k/a DANVILLE UNITED METHODIST CHURCH, INC.														
23	BALIVET, ERNEST T.	103	PS 2+094.86, RT.	PS 2+100.08, RT.			INSTALL	(T)		GTR	11/23/2009	DANVILLE	137	512-513	UTILITY CONNECTION(S)
24	ALICE M. HAFNER 1996 REVOCABLE TRUST	103	PS 2+100.08, RT.	PS 2+135.53, RT.			INSTALL	(T)		GTR	12/10/2009	DANVILLE	137	608-609	UTILITY CONNECTION(S)
25	NOT USED														N/F CATHERINE J. BEATTIE TRUST OF MARTIN J. BEATTIE, TRUSTEES-LESSOR UNITED STATES POST OFFICE - LESSEE
26	THE DORSEY VERMONT REALTY TRUST	103	PS 2+185.33, RT.	PS 2+211.12, RT.			INSTALL	(T)		GTR	12/10/2009	DANVILLE	137	610-611	WATER SHUTOFF & RELATED PIPING
	JEANNE COLBATH - TRUSTEE		PS 2+210.96, RT.	PS 2+230.26, RT.			CONST.	(T)	21 SM						226 SF ERO. CTRL & PDF
			PS 2+224.70, RT				DRIVE	(T)							4.7m (15') BITUMINOUS

TABLE OF REVISIONS

REVISION NO.	SHEET NO.	DESCRIPTION	DATE

REPLACEMENT SHEETS ISSUED 02/24/2012

PLAN LEGEND

- EXISTING RIGHT-OF-WAY
- TAKING WITH ACCESS
- TAKING WITHOUT ACCESS
- CLEAR ZONE (CZ)
- PROPERTY LINE (P / L)
- TOE OF SLOPE
- TOP OF CUT
- SLOPE RIGHT (SR (P))
- CONSTRUCTION RIGHT (CONST.(T))

(P) -PERMANENT
(T) -TEMPORARY
DR. -DRAINAGE RIGHT
DIT. -DITCHING RIGHT
CH. -CHANNEL RIGHT
DRIVE -DRIVE RIGHT
CUL. -CULVERT RIGHT
C&T -CLEARING & TRIMMING RIGHT
SR -SLOPE RIGHT
UE -UTILITY EASEMENT

SCF -SOIL CONTROL FILTER
HH -HAND HOLE
SL -STREET LIGHT

APPROVED: HARRY PETROVS DATE: JULY 9, 2009
CHIEF, PLANS & TITLES

Stantec

PROJECT NAME: DANVILLE
PROJECT NUMBER: F EGC 028-3(32)

FILE NAME: ...\PlotFiles\ROW\ROW details.ptf
DESIGN SUPERVISOR: GARY SANTY
DESIGNED BY: STANTEC
RIGHT-OF-WAY DETAIL RDS-6

PLOT DATE: 2/24/2012
DRAWN BY: STANTEC
CHECKED BY: STANTEC
SHEET 26 OF 306

2/24/2012 3:57:47 PM V:\9530\active\95300033.0092\highway\PlotFiles\ROW\ROW details.ptf

STATE OF VERMONT
AGENCY OF TRANSPORTATION

RIGHT - OF - WAY DETAIL SHEET

TABLE OF PROPERTY ACQUISITION

PARCEL NO.	PROPERTY OWNER	SHEET NO.	BEGINNING STATION	ENDING STATION	TAKE	REMAINDER	RIGHT			RECORDING DATA					REMARKS
					AREA±	AREA±	TYPE	(T)/(P)	AREA ±	TITLE	DATE	TOWN / CITY	BOOK	PAGE	
27	MOORE, HEIDI	103	PS 2+220.35, LT.	PS 2+226.95, LT.			SLOPE	(T)	24 SM	GTR	11/23/2009	DANVILLE	137	514-515	258 SF
			SS 5+091.18, LT.	PS 2+242.22, LT.			INSTALL	(T)							UTILITY CONNECTION(S)
			SS 5+091.22, LT.	SS 5+093.46, LT.			CONST.	(T)	2 SM						22 SF ERO. CTRL & PDF
			SS 5+100.01, LT.	PS 2+232.28, LT.			CONST.	(T)	34 SM						366 SF ERO. CTRL & PDF
28	WASHBURN LODGE #92	103	SS 5+087.45, LT.	SS 5+091.02, LT			SLOPE	(T)	3 SM	GTR	12/10/2009	DANVILLE	137	612-614	32 SF
	FREE AND ACCEPTED MASONS		SS 5+060.83, LT.	SS 5+091.18, LT.			INSTALL	(T)							UTILITY CONNECTION(S)
			SS 5+060.83, LT.	SS 5+091.21, LT.			INSTALL	(T)							WATER SHUTOFF & RELATED PIPING
			SS 5+080.17, LT.	SS 5+092.00, LT.			WALK	(T)							1.5m (5') WIDE INCLUDES HANDICAP RAMP
			SS 5+085.79, LT.	SS 5+091.21, LT			CONST.	(T)	13 SM						140 SF ERO. CTRL & PDF
29	CRUESS, WILLIAM J. &	103	SS 5+029.10, LT.	SS 5+060.83, LT.			INSTALL	(T)		GTR	11/23/2009	DANVILLE	137	510-511	UTILITY CONNECTION(S)
	CRUESS, ALICE L.		SS 5+029.10, LT.	SS 5+060.83, LT.			INSTALL	(T)							WATER SHUTOFF & RELATED PIPING
30A	BEATTIE, MARTIN &	102	19+131.20, LT.	19+164.81, LT.	54 SM					WD	1/11/2010	DANVILLE	138	157-158	581 SF
	BEATTIE, PLYNN		19+130.24, LT.												DRIVE, 4.5m(14.8') GRAVEL MM0444 (SHARED W/19A)
			19+131.20, LT.	19+165.94, LT.			INSTALL	(T)							WATER SHUTOFF & RELATED PIPING
			19+141.50, LT.	19+143.50, LT.			INSTALL	(P)							SL-45 & RELATED CONDUIT
			19+144.81, LT.				INSTALL	(T)							CURB
			HS 3+009.16, LT.	HS 3+035.10, LT.			INSTALL	(T)							UTILITY CONNECTION(S) ALSO USE EXISTING UNDERGROUND CONDUIT
30B		102	19+131.20, LT.	19+180.32, LT.	362 SM		ALL R, T & I								US RT. 2 HWY. & TH 2 EASE. (3897 SF)
31A	DAUTEUIL, JOHN E. &	102	19+187.90, LT.	19+210.61, LT.	7 SM					COND	9/8/2010	DANVILLE	140	622-627	75 SF
	BEATTIE, THOMAS C. - LESSORS		19+179.63, LT.	19+200.00, LT.			SLOPE	(T)	61 SM						657 SF
	DIAMOND HILL STORE, LLC - LESSEE		19+204.10, LT.				DRIVE	(T)							9.1m(30') BITUMINOUS , MM 0450
			19+180.32, LT.	19+188.00, LT.			INSTALL	(P)							CONDUIT, SIGNALIZATION EQUIPMENT & LIGHT
			19+180.32, LT.	19+210.46, LT.			INSTALL	(T)							WATER SHUTOFF & RELATED PIPING
31B		102	19+164.29, LT.	19+210.58, RT.	339 SM		ALL R, T & I								US RT. 2 HWY. & TH 2 EASE. 3652 SF ±
32A	GARLAND, JUDY R.	102, 104	19+210.56, LT.	19+260.42, LT.	14 SM					WD	4/14/2010	DANVILLE	139	214-215	151 SF
	a/k/a JUDY RANDALL		19+210.56, LT.	19+260.42, LT.			INSTALL	(T)							UTILITY CONNECTION(S)
			19+210.61, LT.	19+217.14, LT.			SLOPE	(T)	6 SM						65 SF
			19+210.56, LT.	19+260.42, LT.			INSTALL	(T)							WATER STOP & RELATED PIPING
			19+211.70, LT.	19+213.60, LT.			WALK	(T)							1.8m(5.9') INDIVIDUAL WALK
			19+226.60, LT.				DRIVE	(T)							6.0m(20') GRAVEL, MM 0451
			19+240.66, LT.	19+260.42, LT.			CONST.	(T)	15 SM						161 SF INC. ERO CNTRL & PDF
			19+248.00, LT.				INSTALL	(P)							UTILITY VAULT
32 B		102, 104	19+210.56, LT.	19+260.42, LT.	372 SM		ALL R, T & I								US RT. 2 HWY. EASE. 4004 SF ±

TABLE OF REVISIONS

REVISION NO.	SHEET NO.	DESCRIPTION	DATE

REPLACEMENT SHEETS ISSUED 02/24/2012

PLAN LEGEND

- EXISTING RIGHT-OF-WAY
- TAKING WITH ACCESS
- TAKING WITHOUT ACCESS
- CZ — CLEAR ZONE
- P L — PROPERTY LINE
- TOE OF SLOPE
- TOP OF CUT
- SR (P) — SLOPE RIGHT
- CONST.(T) — CONSTRUCTION RIGHT

(P)	-PERMANENT
(T)	-TEMPORARY
DR.	-DRAINAGE RIGHT
DIT.	-DITCHING RIGHT
CH.	-CHANNEL RIGHT
DRIVE	-DRIVE RIGHT
CUL.	-CULVERT RIGHT
C&T	-CLEARING & TRIMMING RIGHT
SR	-SLOPE RIGHT
UE	-UTILITY EASEMENT

SCF	-SOIL CONTROL FILTER
HH	-HAND HOLE
SL	-STREET LIGHT

APPROVED: HARRY PETROVS DATE: JULY 9, 2009
CHIEF, PLANS & TITLES

Stantec

PROJECT NAME: DANVILLE
PROJECT NUMBER: F EGC 028-3(32)

FILE NAME: ...\PlotFiles\ROW\ROW details.ptf — PLOT DATE: 2/24/2012
DESIGN SUPERVISOR: GARY SANTY — DRAWN BY: STANTEC
DESIGNED BY: STANTEC — CHECKED BY: STANTEC
RIGHT-OF-WAY DETAIL RDS-7 — SHEET 27 OF 306

2/24/2012 3:58:50 PM V:\953\active\953003.0092\Highway\PlotFiles\ROW\ROW details.ptf

STATE OF VERMONT
AGENCY OF TRANSPORTATION

RIGHT - OF - WAY DETAIL SHEET

TABLE OF PROPERTY ACQUISITION

PARCEL NO.	PROPERTY OWNER	SHEET NO.	BEGINNING STATION	ENDING STATION	TAKE	REMAINDER	RIGHT			RECORDING DATA					REMARKS
					AREA±	AREA±	TYPE	(T)/(P)	AREA ±	TITLE	DATE	TOWN / CITY	BOOK	PAGE	
33	BRINKERHOFF, ERIC &	102, 103,	19+240.66, RT.	19+302.52, RT.	0.05 HA		ALL R, T & I			WD	11/13/2009	DANVILLE	137	477-478	US RT. 2 HWY. EASE. (0.12 AC)
	HURST-BRINKERHOFF, PAMELA	104	19+240.66, RT.	19+256.38, RT.			INSTALL	(T)							WATER SHUTOFF & RELATED PIPING
	d/b/a MELODY HILL FARM		19+246.76, RT.	19+256.38, RT.			CONST.	(T)	9 SM						97 SF INC ERO CNTRL & PDF
			19+250.00, RT.	19+254.94, RT.			SLOPE	(T)	4 SM						43 SF
			19+258.70, RT.				DRIVE	(T)							3.1m(10') GRAVEL, MM 0453
			19+260.45, RT.	19+270.25, RT.			SLOPE	(T)	8 SM						86 SF
			19+260.49, RT.	19+273.12, RT.			CONST.	(T)	11 SM						118 SF INC ERO CNTRL & PDF
			19+295.31, RT.	19+302.52, RT.			CONST.	(T)	1 SM						11 SF INC ERO CNTRL & PDF
			19+240.29, RT.	19+246.77, RT.			INSTALL	(T)							PORCH SUPPORTS
			19+240.53, RT.	SS 5+029.10, LT.			INSTALL	(T)							UTILITY CONNECTION(S)
			19+237.00, RT.	19+247.00, RT.											EXCEPT & RESERVE (PORCH IN ROW)
34A	ROGERS, JAY A. & MAUREEN P.	104	19+260.42, LT.	19+319.40, LT.	25 SM					WD	1/19/2010	DANVILLE	138	179-181	269 SF
			19+260.42, LT.	19+264.43, LT.			CONST.	(T)	2 SM						22 SF INC ERO CNTRL & PDF
			19+260.42, LT.	19+319.40, LT.			INSTALL	(T)							WATER SHUTOFF & RELATED PIPING
			19+260.42, LT.	19+319.40, LT.			INSTALL	(T)							UTILITY CONNECTION(S)
			19+266.10, LT				DRIVE	(T)							3.0m(10') BITUMINOUS , MM 0453
			19+267.52, LT.	19+319.30, LT.			CONST.	(T)	136 SM						1464 SF INC ERO CNTRL & PDF
			19+279.00, LT.				REMOVE	(T)							TREE
			19+279.33, LT.				LANDSCAPE	(T)							TREE
			19+282.54, LT.	19+288.00, LT.			SLOPE	(T)	3 SM						32 SF
34B		104	19+260.29, RT.	19+319.44, RT.	0.04 HA		ALL R, T & I								US RT. 2 HWY. EASE. (0.10 AC)
35	TOWLE, DAVID A. & SHELLEY R.	104	19+302.48, RT.	19+352.84, RT.	380 SM		ALL R, T & I			WD	4/14/2010	DANVILLE	139	212-213	US RT. 2 HWY. EASE. 4090 SF±
			19+302.52, RT.	19+352.84, RT.			INSTALL	(T)							WATER SHUTOFF & RELATED PIPING
			19+302.52, RT.	19+321.66, RT.			CONST.	(T)	12 SM						129 SF INC. ERO CNTRL & PDF
			19+303.70, RT.	19+320.20, RT.			SLOPE	(T)	10 SM						108 SF
			19+336.60, RT.				DRIVE	(T)							4.2m(14') BITUMINOUS , MM0458
			19+344.74, RT.	19+352.84, RT.			CONST.	(T)	17 SM						183 SF INC. ERO CNTRL & PDF
			19+346.30, RT.				LANDSCAPE	(T)							TREE
36A	SWEENEY, PHYLLIS KEHLEY	104	19+319.40, LT.	19+365.27, LT.	10 SM					WD	2/11/2010	DANVILLE	138	409-410	108 SF
			19+319.40, LT.	19+331.52, LT.			CONST.	(T)	31 SM						334 SF INC. ERO CNTRL & PDF
			19+319.40, LT.	19+365.27, LT.			INSTALL	(T)							WATER SHUTOFF & RELATED PIPING
			19+331.94, LT.				WALK	(T)							SIDEWALK 1.0M (3') CONCRETE
			19+337.09, LT.	19+345.80, LT.			SLOPE	(T)	9 SM						97 SF
			19+340.50, LT.				LANDSCAPE	(T)							TREE
			19+347.40, LT.				DRIVE	(T)							4.3m(14') GRAVEL, MM 0458
			19+349.98, LT.	19+357.25, LT.			SLOPE	(T)	9 SM						97 SF
			19+359.30, LT.				DRIVE	(T)							4.1m(13') GRAVEL, MM 0459
			19+361.39, LT.	19+365.27, LT.			SLOPE	(T)	5 SM						54 SF
			19+362.58, LT.				REMOVE	(T)							STONE WALL
36B		104	19+319.40, LT.	19+365.28, RT.	346 SM		ALL R, T & I								US RT. 2 HWY. EASE. 3724 SF±

TABLE OF REVISIONS

REVISION NO.	SHEET NO.	DESCRIPTION	DATE

REPLACEMENT SHEETS
ISSUED 02/24/2012

PLAN LEGEND

- EXISTING RIGHT-OF-WAY
- TAKING WITH ACCESS
- TAKING WITHOUT ACCESS
- CLEAR ZONE (CZ)
- PROPERTY LINE (P / L)
- TOE OF SLOPE
- TOP OF CUT
- SLOPE RIGHT (SR (P))
- CONSTRUCTION RIGHT (CONST.(T))

(P)	-PERMANENT
(T)	-TEMPORARY
DR.	-DRAINAGE RIGHT
DIT.	-DITCHING RIGHT
CH.	-CHANNEL RIGHT
DRIVE	-DRIVE RIGHT
CUL.	-CULVERT RIGHT
C&T	-CLEARING & TRIMMING RIGHT
SR	-SLOPE RIGHT
UE	-UTILITY EASEMENT

SCF	-SOIL CONTROL FILTER
HH	-HAND HOLE
SL	-STREET LIGHT

APPROVED: HARRY PETROVS DATE: JULY 9, 2009
CHIEF, PLANS & TITLES

Stantec

PROJECT NAME: DANVILLE
PROJECT NUMBER: F EGC 028-3(32)

FILE NAME: ...\PlotFiles\ROW\ROW details.ptf
DESIGN SUPERVISOR: GARY SANTY
DESIGNED BY: STANTEC
RIGHT-OF-WAY DETAIL RDS-8

PLOT DATE: 2/24/2012
DRAWN BY: STANTEC
CHECKED BY: STANTEC
SHEET 28 OF 306

2/24/2012 3:59:49 PM V:\1953\active\95300033.0092\highway\PlotFiles\ROW\ROW details.ptf

STATE OF VERMONT
AGENCY OF TRANSPORTATION

RIGHT - OF - WAY DETAIL SHEET

TABLE OF PROPERTY ACQUISITION

PARCEL NO.	PROPERTY OWNER	SHEET NO.	BEGINNING STATION	ENDING STATION	TAKE	REMAINDER	RIGHT			RECORDING DATA					REMARKS
					AREA±	AREA±	TYPE	(T)/(P)	AREA ±	TITLE	DATE	TOWN / CITY	BOOK	PAGE	
37	KEEFE, THOMAS J.	104	19+352.83, RT.	19+422.11, RT.	0.05 HA		ALL R, T & I			WD	2/2/2010	DANVILLE	138	341-343	US RT. 2 HWY. EASE. (0.12 AC)
	a.k.a. KEEFE, THOMAS J., JR.		19+352.83, RT.	19+381.23, RT.			SLOPE	(T)	18 SM						194 SF
			19+352.83, RT.	19+380.47, RT.			CONST.	(T)	17 SM						183 SF INC. ERO CNTRL & PDF
			19+352.83, RT.	19+422.11, RT.			INSTALL	(T)							WATER SHUTOFF & RELATED PIPING
			19+358.80, RT.	19+371.10, RT.			LANDSCAPE	(T)							TREES
			19+384.80, RT.				DRIVE	(T)							7.2m(24') GRAVEL, MM0461
			19+388.38, RT.	19+422.17, RT.			SLOPE	(T)	130 SM						1399 SF
			19+388.26, RT.	19+422.21, RT.			CONST.	(T)	150 SM						1615 SF INC. ERO CNTRL & PDF
			19+416.90, RT.	19+420.74, RT.			LANDSCAPE	(T)							SHRUBS
			19+419.83, RT.	19+422.28, RT.			DIT. & DR.	(P)	11 SM						118 SF
			19+421.52, RT.				CUL.	(P)							
38A	FRAIN, JEROME P.	104	19+365.27, LT.	19+400.97, LT.	3 SM					WD	1/19/2010	DANVILLE	138	182-183	32 SF
			19+365.27, LT.	19+425.02, LT.			SLOPE	(T)	48 SM						517 SF
			19+365.12, LT.	19+426.87, LT.			CONST.	(T)	0.04 HA						0.10 AC INC. ERO CNTRL. & PDF
			19+366.40, LT.	19+414.40, LT.			LANDSCAPE	(T)							2 TREES
			19+421.10, LT.				DI & CUL.	(P)							
			19+418.50, LT.	19+425.14, LT.			INSTALL	(P)							48" CULVERT AND HEADWALL
			19+421.10 LT.				REMOVE	(T)							EXISTING 24" CULVERT
38B		104	19+365.27, LT.	19+440.12, LT.	0.06 HA		ALL R, T & I								US RT. 2 HWY. & TH 114 EASE. (0.14 AC)
39	WOODWARD, LEONARD F. & RUTH N.	104, 105	19+424.94, LT.	19+472.02, LT.	353 SM		ALL R, T & I			WD	1/20/2010	DANVILLE	138	200-201	US RT. 2 HWY. & TH 114 EASE. 3821 SF±
			19+440.12, LT.	19+446.00, LT.			INSTALL	(P)							HH-13 & RELATED CONDUIT
			19+440.12, LT.	19+472.02, LT.			INSTALL	(T)							WATER SHUTOFF & RELATED PIPING
			19+440.12, LT.	19+451.44, LT.			SLOPE	(T)	20 SM						215 SF
			19+440.96, LT.	19+463.90, LT.			CONST.	(T)	17 SM						183 SF INC. ERO CNTRL & PDF
			19+445.45, LT.				INSTALL	(T)							TEMPORARY ERO CNTRL MEASURE, SCF
			19+449.15, LT.				INSTALL	(T)							HYDRANT
			19+468.10, LT.				DRIVE	(T)							5.8m(19') GRAVEL, MM0466
			19+471.00, LT.	19+472.61, LT.			SLOPE	(T)	4 SM						43 SF
40A	CORSO, STUART V. & JUDITH A.	104, 105	19+441.90, RT.	19+483.03, RT.	5 SM					WD	1/29/2010	DANVILLE	138	338-339	54 SF
	SALAMANDRA		19+441.90, RT.	19+447.71, RT.			SLOPE	(T)	7 SM						75 SF
			19+441.90, RT.	19+483.03, RT.			INSTALL	(T)							WATER SHUTOFF & RELATED PIPING
			19+441.92, RT.	19+483.04, RT.			CONST.	(T)	73 SM						786 SF INC. ERO CNTRL & PDF
			19+451.72, RT.												SIGN - DO NOT DISTURB
			19+460.50, RT.				LANDSCAPE	(T)							TREE
40B		104, 105	19+426.81, RT.	19+483.03, RT.	0.04 HA		ALL R, T & I								US RT. 2 HWY. & TH 116 EASE. (0.10 AC±)
40C		104	19+422.11, RT.	19+426.81, RT.	35 SM		ALL R, T & I								US RT. 2 HWY. EASE. 377 SF±
			19+422.11, RT.	19+425.82, RT.			DIT. & DR.	(P)	24 SM						258 SF
			19+422.11, RT.				CUL.	(P)							
			19+422.16, RT.	19+426.88, RT.			INSTALL	(T)							WATERLINE
			19+423.30, RT.	19+426.80, RT.			LANDSCAPE	(T)							SHRUBS

TABLE OF REVISIONS

REVISION NO.	SHEET NO.	DESCRIPTION	DATE

REPLACEMENT SHEETS ISSUED 02/24/2012

PLAN LEGEND

- EXISTING RIGHT-OF-WAY
- TAKING WITH ACCESS
- TAKING WITHOUT ACCESS
- CLEAR ZONE (CZ)
- PROPERTY LINE (P / L)
- TOE OF SLOPE
- TOP OF CUT
- SLOPE RIGHT (SR (P))
- CONSTRUCTION RIGHT (CONST.(T))

(P) -PERMANENT
(T) -TEMPORARY
DR. -DRAINAGE RIGHT
DIT. -DITCHING RIGHT
CH. -CHANNEL RIGHT
DRIVE -DRIVE RIGHT
CUL. -CULVERT RIGHT
C&T -CLEARING & TRIMMING RIGHT
SR -SLOPE RIGHT
UE -UTILITY EASEMENT

SCF -SOIL CONTROL FILTER
HH -HAND HOLE
SL -STREET LIGHT

APPROVED: HARRY PETROVS DATE: JULY 9, 2009
CHIEF, PLANS & TITLES

Stantec

PROJECT NAME: DANVILLE
PROJECT NUMBER: F EGC 028-3(32)

FILE NAME: ...\PlotFiles\ROW\ROW details.ptf
DESIGN SUPERVISOR: GARY SANTY
DESIGNED BY: STANTEC
RIGHT-OF-WAY DETAIL RDS-9

PLOT DATE: 2/24/2012
DRAWN BY: STANTEC
CHECKED BY: STANTEC
SHEET 29 OF 306

2/24/2012 4:00:47 PM V:\9530\active\95300033.0092\Highway\PlotFiles\ROW\ROW details.ptf

STATE OF VERMONT
AGENCY OF TRANSPORTATION

RIGHT - OF - WAY DETAIL SHEET

TABLE OF PROPERTY ACQUISITION

PARCEL NO.	PROPERTY OWNER	SHEET NO.	BEGINNING STATION	ENDING STATION	TAKE	REMAINDER	RIGHT			RECORDING DATA					REMARKS
					AREA±	AREA±	TYPE	(T)/(P)	AREA ±	TITLE	DATE	TOWN / CITY	BOOK	PAGE	
41	HUDSON, ERIC R. &	105, 106	19+472.00, LT.	19+566.60, LT.	0.07 HA		ALL R, T & I			WD	9/20/2010	DANVILLE	141	44-46	US RT. 2 HWY. EASE. (0.17 AC)
	HUDSON, SPENCER K.		19+472.02, LT.	19+477.82, LT.			SLOPE	(T)	12 SM						129 SF
			19+472.61, LT.	19+479.29, LT.			CONST.	(T)	17 SM						183 SF INC. ERO CNTRL & PDF
			19+474.88, LT.				INSTALL	(T)							WATERLINE FUTURE CONNECTION
			19+483.00, LT.				DRIVE	(T)							12.2m (40') GRAVEL, MM0467
			19+490.00, LT.	19+656.78, LT.			DIT. & DR.	(P)	0.08 HA						0.20 AC
			19+490.00, LT.	19+656.78, LT.			CONST.	(T)	0.05 HA						0.12 AC INC. ERO CNTRL & PDF
			19+501.60, LT.	19+575.00, LT.			LANDSCAPE	(T)							TREES
			19+544.00, LT.				INSTALL	(T)							PRESSURE REDUCING VALVE VAULT
			19+562.00, LT.												12.2m (40') GRAVEL, MM0472 - FUTURE
															DRIVE ACCESS
			19+617.00, LT.	19+646.00, LT.			INSTALL	(P)							SL-89, SL-91, HH-17, RELATED CONDUIT
			19+618.90, LT.	19+636.80, LT.			LANDSCAPE	(T)							TREES
			19+649.00, LT.				INSTALL	(T)							HYDRANT
			19+652.00,CL												SLEEVE FOR FUTURE SEWER CONNECTION
			19+655.00, LT.				INSTALL	(T)							WATERLINE FUTURE CONNECTION
42A	DREW, BLAINE EVERETT	105	19+483.03, RT.	19+521.48, RT.	8 SM					WD	4/5/2010	DANVILLE	139	138-139	86 SF
			19+483.03, RT.	19+486.97, RT.			CONST.	(T)	2 SM						22 SF INC. ERO CNTRL & PDF
			19+483.03, RT.	19+521.48, RT.			INSTALL	(T)							WATER SHUTOFF & RELATED PIPING
			19+484.40, RT.				LANDSCAPE	(T)							TREE
			19+489.80, RT.				DRIVE	(T)							3.8m (12') BITUMINOUS, MM0467
			19+491.82, RT.	19+521.48, RT.			CONST.	(T)	3 SM						32 SF INC. ERO CNTRL & PDF
42B		105	19+483.02, LT.	19+521.48, RT.	290 SM		ALL R, T & I								US RT. 2 HWY. EASE. 3122SF ±
43A	TELEPHONE OPERATING COMPANY OF	105	19+521.48, RT.	19+551.44, RT.	8 SM					WD	11/29/2010	DANVILLE	141	722-723	86 SF
	VERMONT LLC		19+528.50, RT.				DRIVE	(T)							7.2m (24') BITUMINOUS, MM0470
			19+548.12, RT.				REMOVE	(T)							HYDRANT
			19+521.48, RT.	19+551.44, RT.			INSTALL	(T)							WATER SHUTOFF & RELATED PIPING
			19+538.40, RT.				LANDSCAPE	(T)							TREE
43B		105	19+521.48, RT.	19+551.48, LT.	225 SM		ALL R, T & I								US RT. 2 HWY. EASE. 2422 SF ±
44A	OUR LADY QUEEN OF PEACE PARISH	105 - 107	19+566.54, RT.	19+673.29, RT.	347 SM					WD	8/26/2010	DANVILLE	140	529-530	3735 SF
	CHARITABLE TRUST		19+566.55, RT.	19+616.08, RT.			CONST.	(T)	240 SM						2583 SF INC. ERO CNTRL & PDF
	MATANO, SALVATORE R. - TRUSTEE		19+571.28, RT.	19+597.16, RT.			SLOPE	(T)	9 SM						97 SF
			19+574.09, RT.				LANDSCAPE	(T)							TREE
			19+618.90, RT.	19+636.80, RT.			LANDSCAPE	(T)							TREES
			19+643.15, RT.	19+776.33, RT.			CONST.	(T)	181 SM						1948 SF INC. ERO CNTRL & PDF
			19+649.60, RT.	19+755.23, RT.			DIT. & DR.	(P)	119 SM						1281 SF
			19+776.36, RT.	19+783.82, RT.			LANDSCAPE	(T)							TREES
44B		107	19+776.23, RT.	19+844.16, RT.	0.52 HA										1.28 AC ±

TABLE OF REVISIONS

REVISION NO.	SHEET NO.	DESCRIPTION	DATE

REPLACEMENT SHEETS ISSUED 02/24/2012

PLAN LEGEND

EXISTING RIGHT-OF-WAY
TAKING WITH ACCESS
TAKING WITHOUT ACCESS
CLEAR ZONE (CZ)
PROPERTY LINE (P / L)
TOE OF SLOPE
TOP OF CUT
SLOPE RIGHT (SR (P))
CONSTRUCTION RIGHT (CONST.(T))

(P) -PERMANENT
(T) -TEMPORARY
DR. -DRAINAGE RIGHT
DIT. -DITCHING RIGHT
CH. -CHANNEL RIGHT
DRIVE -DRIVE RIGHT
CUL. -CULVERT RIGHT
C&T -CLEARING & TRIMMING RIGHT
SR -SLOPE RIGHT
UE -UTILITY EASEMENT

SCF -SOIL CONTROL FILTER
HH -HAND HOLE
SL -STREET LIGHT

APPROVED: HARRY PETROVS DATE: JULY 9, 2009
CHIEF, PLANS & TITLES

Stantec

PROJECT NAME: DANVILLE
PROJECT NUMBER: F EGC 028-3(32)

FILE NAME: ...\PlotFiles\ROW\ROW details.ptf
DESIGN SUPERVISOR: GARY SANTY
DESIGNED BY: STANTEC
RIGHT-OF-WAY DETAIL RDS-10

PLOT DATE: 2/24/2012
DRAWN BY: STANTEC
CHECKED BY: STANTEC
SHEET 30 OF 306

2/24/2012 4:04:46 PM V:\9530\active\95300033.0092\Highway\PlotFiles\ROW\ROW details.ptf

STATE OF VERMONT
AGENCY OF TRANSPORTATION

RIGHT - OF - WAY DETAIL SHEET

TABLE OF PROPERTY ACQUISITION

PARCEL NO.	PROPERTY OWNER	SHEET NO.	BEGINNING STATION	ENDING STATION	TAKE	REMAINDER	RIGHT			RECORDING DATA					REMARKS
					AREA±	AREA±	TYPE	(T)/(P)	AREA ±	TITLE	DATE	TOWN / CITY	BOOK	PAGE	
45	RIOPEL, DENISE M.	106	19+656.78, LT.	19+672.53, LT.			DIT. & DR.	(P)	51 SM	WD	1/20/2010	DANVILLE	138	201-202	549 SF
			19+656.78, LT.	19+666.00, LT.			CONST.	(T)	20 SM						215 SF - INC ERO CNTRL & PDF
			19+667.70, LT.	19+699.33, LT.			INSTALL	(T)							WATER SHUTOFF & RELATED PIPING
			19+667.80, LT.				INSTALL	(P)							HEADWALL
			19+675.00, LT.				DRIVE	(T)							5.6m (18') GRAVEL, MM0479
			19+680.09, LT.	19+699.33, LT.			CONST.	(T)	39 SM						420 SF - INC ERO CNTRL & PDF
46	DREW, EVERETT W. & NORMA S. TRUSTEES	106, 107	19+699.31, LT.	19+825.76, LT.			CONST.	(T)	339 SM	GTR	2/4/2010		138	347-348	3649 SF - INC ERO CNTRL & PDF
	OF THE EVERETT W. DREW AND NORMA S.		19+769.10, LT.				DRIVE	(T)							4.0m (13') GRAVEL, MM0485
	DREW REVOCABLE TRUST		19+800.90, LT.				DRIVE	(T)							3.2m (10') GRAVEL, MM0487
			19+764.38, LT.	19+764.68, LT.			INSTALL & MAINTAIN	(P)							DROP INLET AND RELATED PIPING
			19+795.80, LT.	19+796.18, LT			INSTALL & MAINTAIN	(P)							DROP INLET AND RELATED PIPING
47	NOT USED														N/F TWENTY HILL STREET, LLC.
48	DAUTEUIL, JOHN E.&	102	HS 3+035.10, LT.	HS 3+045.18, LT.			INSTALL	(T)		GTR	12/23/2009		138	26-28	UTILITY CONNECTION(S)
	BEATTIE, THOMAS C.														USE EXISTING UNDERGROUND CONDUIT
49	NOT USED														N/F MARTIN J. BEATTIE TRUST DATED
															3/25/03, MARTIN J. BEATTIE, TRUSTEE &
															CATHERINE J. BEATTIE TRUST DATED
															3/25/03, CATHERINE J. BEATTIE, TRUSTEE
50	NOT USED														N/F DANVILLE ECUMENICAL COMMUNITY
															CENTER
	RELINQUISHMENT NO. I	99	18+878.24, LT.	WHR 1+057.92, LT.											TH 14 - WALDEN HILL RD.
	MAINTENANCE AGREEMENT ZONE 1	99	WHR 1+003.30, CL	WHR 1+008.69, CL											TH 14 - WALDEN HILL RD.
															LENGTH 5.39 M (17.7')
	MAINTENANCE AGREEMENT ZONE 2	102	PS 2+008.08, CL	PS 2+010.81, CL											TH 94 - PARK ST. LENGTH 2.73 M (9.0')
	MAINTENANCE AGREEMENT ZONE 3	102	HS 3+003.80, CL	HS 3+008.72, CL											TH 2 - HILL ST. LENGTH 4.92 M (16.1')
	MAINTENANCE AGREEMENT ZONE 4	102	PR 4+009.98, CL	PR 4+012.44, CL											TH 3 - PEACHAM RD.
															LENGTH 2.46 M (8.1')
	MAINTENANCE AGREEMENT ZONE 5	102	SS 5+008.43, CL	SS 5+010.76, CL											TH 88 - SMITH ST. LENGTH 2.33 M (7.6')
	MAINTENANCE AGREEMENT ZONE 6	104	HA 6+003.31, CL	HA 6+007.63, CL											TH 131 - HIGHLAND AVE.
															LENGTH 4.32 M (14.2')
	MAINTENANCE AGREEMENT ZONE 7	104	MVD 7+003.22, CL	MVD 7+007.48, CL											TH 116 - MOUNTAIN VIEW DRIVE
															LENGTH 4.26 M (14.0')

TABLE OF REVISIONS

REVISION NO.	SHEET NO.	DESCRIPTION	DATE

REPLACEMENT SHEETS ISSUED 02/24/2012

PLAN LEGEND

- EXISTING RIGHT-OF-WAY
- TAKING WITH ACCESS
- TAKING WITHOUT ACCESS
- CLEAR ZONE (CZ)
- PROPERTY LINE (P L)
- TOE OF SLOPE
- TOP OF CUT
- SLOPE RIGHT (SR (P))
- CONSTRUCTION RIGHT (CONST.(T))

(P)	-PERMANENT
(T)	-TEMPORARY
DR.	-DRAINAGE RIGHT
DIT.	-DITCHING RIGHT
CH.	-CHANNEL RIGHT
DRIVE	-DRIVE RIGHT
CUL.	-CULVERT RIGHT
C&T	-CLEARING & TRIMMING RIGHT
SR	-SLOPE RIGHT
UE	-UTILITY EASEMENT
SCF	-SOIL CONTROL FILTER
HH	-HAND HOLE
SL	-STREET LIGHT

APPROVED: HARRY PETROVS DATE: JULY 9, 2009
CHIEF, PLANS & TITLES

Stantec

PROJECT NAME: DANVILLE
PROJECT NUMBER: F EGC 028-3(32)

FILE NAME: ...\PlotFiles\ROW\ROW details.ptf
DESIGN SUPERVISOR: GARY SANTY
DESIGNED BY: STANTEC
RIGHT-OF-WAY DETAIL RDS-11

PLOT DATE: 2/24/2012
DRAWN BY: STANTEC
CHECKED BY: STANTEC
SHEET 31 OF 306

2/24/2012 4:02:43 PM V:\1953\active\195300033.0092\Highway\PlotFiles\ROW\ROW details.ptf

STATE OF VERMONT
AGENCY OF TRANSPORTATION

RIGHT - OF - WAY DETAIL SHEET

TABLE OF PROPERTY ACQUISITION

PARCEL NO.	PROPERTY OWNER	SHEET NO.	BEGINNING STATION	ENDING STATION	TAKE	REMAINDER	RIGHT			RECORDING DATA					REMARKS
					AREA±	AREA±	TYPE	(T)/(P)	AREA ±	TITLE	DATE	TOWN / CITY	BOOK	PAGE	
51	TELEPHONE OPERATING COMPANY OF VERMONT LLC		18+506.52, LT.	19+865.33, RT.						COND	9/8/2010	DANVILLE	140	622-627	UTILITY EASEMENTS
52	CENTRAL VERMONT PUBLIC SERVICE CORP.		18+506.52, LT.	19+865.33, RT.						COND	9/8/2010	DANVILLE	140	622-627	UTILITY EASEMENTS
53	NEXTGEN TELECOM SERVICES GROUP, INC.		18+506.52, LT.	19+865.33, RT.						COND	9/8/2010	DANVILLE	140	622-627	UTILITY EASEMENTS
54	CHARTER COMMUNICATIONS, LLC		18+506.52, LT.	19+865.33, RT.						COND	9/8/2010	DANVILLE	140	622-627	UTILITY EASEMENTS
55	DANVILLE FIRE DISTRICT #1		18+506.52, LT.	19+865.33, RT.						COND	9/8/2010	DANVILLE	140	622-627	UTILITY EASEMENTS

TABLE OF REVISIONS

REVISION NO.	SHEET NO.	DESCRIPTION	DATE

REPLACEMENT SHEETS ISSUED 02/24/2012

PLAN LEGEND

- EXISTING RIGHT-OF-WAY
- TAKING WITH ACCESS
- TAKING WITHOUT ACCESS
- CLEAR ZONE (CZ)
- PROPERTY LINE (P / L)
- TOE OF SLOPE
- TOP OF CUT
- SLOPE RIGHT (SR (P))
- CONSTRUCTION RIGHT (CONST.(T))

(P)	-PERMANENT
(T)	-TEMPORARY
DR.	-DRAINAGE RIGHT
DIT.	-DITCHING RIGHT
CH.	-CHANNEL RIGHT
DRIVE	-DRIVE RIGHT
CUL.	-CULVERT RIGHT
C&T	-CLEARING & TRIMMING RIGHT
SR	-SLOPE RIGHT
UE	-UTILITY EASEMENT
SCF	-SOIL CONTROL FILTER
HH	-HAND HOLE
SL	-STREET LIGHT

APPROVED: HARRY PETROVS DATE: JULY 9, 2009
CHIEF, PLANS & TITLES

Stantec

PROJECT NAME: DANVILLE
PROJECT NUMBER: F EGC 028-3(32)

FILE NAME: ...\PlotFiles\ROW\ROW details.ptf
DESIGN SUPERVISOR: GARY SANTY
DESIGNED BY: STANTEC
RIGHT-OF-WAY DETAIL RDS-12

PLOT DATE: 2/24/2012
DRAWN BY: STANTEC
CHECKED BY: STANTEC
SHEET 32 OF 306

2/24/2012 4:03:40 PM V:\953\active\95300033.0092\Highway\PlotFiles\ROW\ROW details.ptf

CONSTRUCT DRIVE

STATION	LOCATION	TYPE	WIDTH
18+523.7	LT	GRAV. RES.	4.9

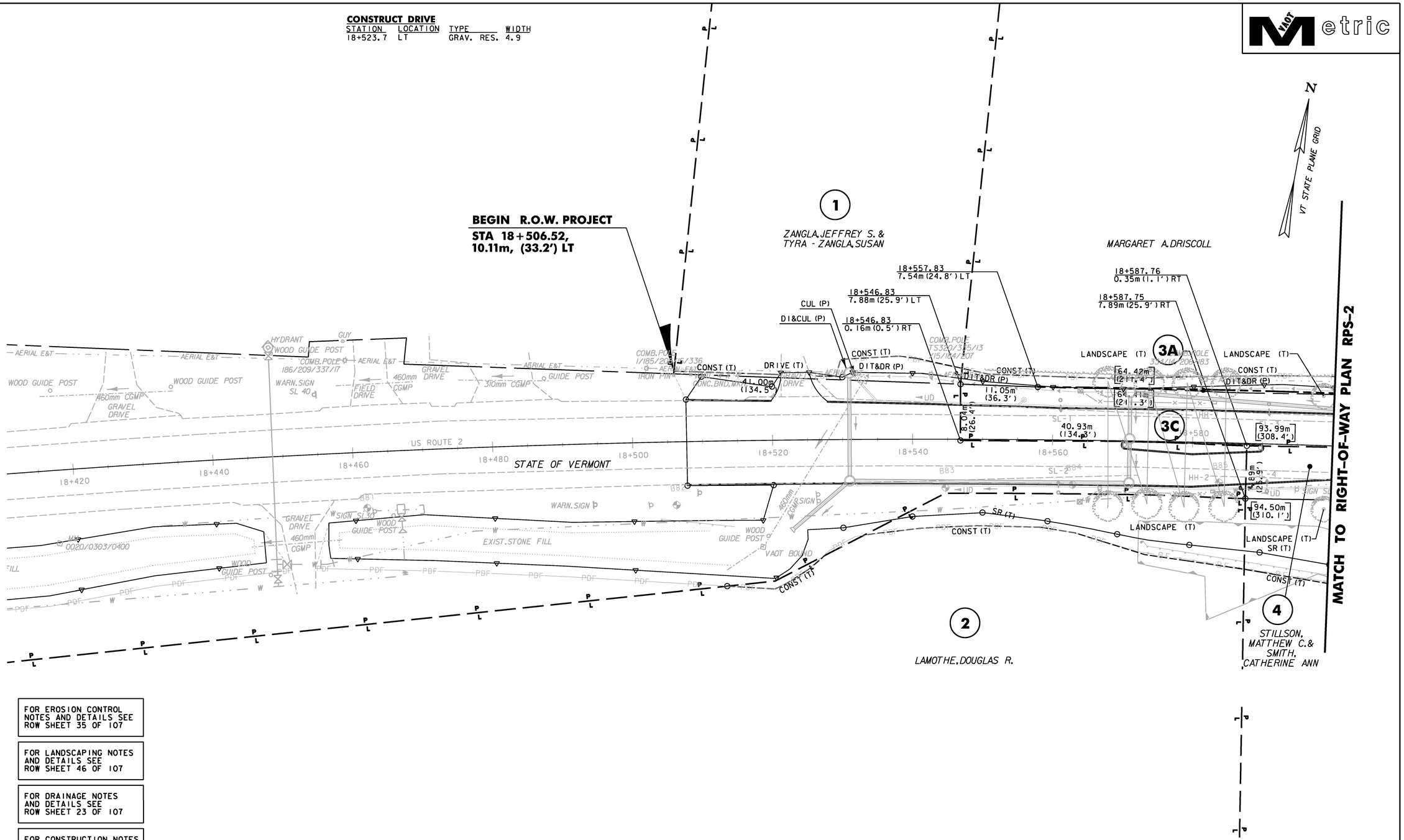

FOR EROSION CONTROL NOTES AND DETAILS SEE ROW SHEET 35 OF 107

FOR LANDSCAPING NOTES AND DETAILS SEE ROW SHEET 46 OF 107

FOR DRAINAGE NOTES AND DETAILS SEE ROW SHEET 23 OF 107

FOR CONSTRUCTION NOTES AND DETAILS SEE ROW SHEET 23 OF 107

DATUM

VERTICAL	NAVD88
HORIZONTAL	NAD83(92)

LINES SHOWN ON THIS PLAN AS EXISTING PROPERTY LINES (P/L) ARE BELIEVED TO BE ACCURATE BUT SHOULD NOT BE RELIED UPON FOR PURPOSES UNRELATED TO THE STATE OF VERMONT'S ACQUISITION OF LAND AND RIGHTS FOR THIS PROJECT.

REPLACEMENT SHEETS ISSUED 02/24/2012

0 10 20
SCALE 1:250

Stantec

THIS SHEET FOR R.O.W. USE ONLY

STA 18+507.730 TO 18+600

PROJECT NAME: DANVILLE
PROJECT NUMBER: F EGC 028-3(32)

FILE NAME: ...\ROW\row_plan_plot_sheets.ptf
DESIGN SUPERVISOR: GARY SANTY
DESIGNED BY: STANTEC
RIGHT-OF-WAY PLAN RPS-1

PLOT DATE: 2/24/2012
DRAWN BY: STANTEC
CHECKED BY: STANTEC
SHEET 33 OF 306

2/24/2012 4:04:35 PM V:\1953\active\195310033_10192\Highway\PlotFiles\ROW\row_plan_plot_sheets.ptf

CONSTRUCT DRIVE

STATION	LOCATION	TYPE	WIDTH
18+648.4	LT	BIT. RES.	4.0
18+762.4	LT	CONC. & GRAV. COM.	5.1
18+660.5	RT	GRAV. COM.	10.0

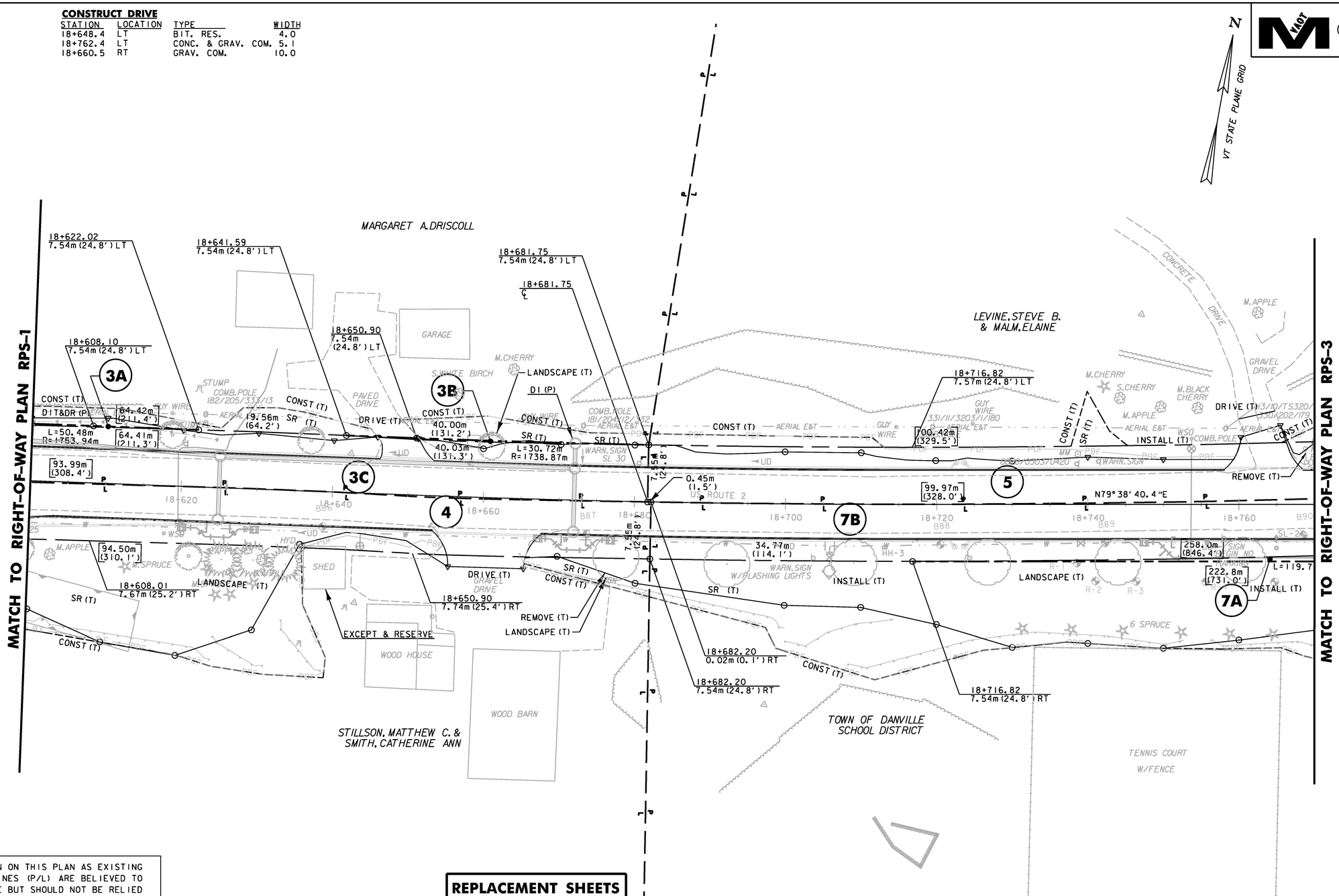

LINES SHOWN ON THIS PLAN AS EXISTING PROPERTY LINES (P/L) ARE BELIEVED TO BE ACCURATE BUT SHOULD NOT BE RELIED UPON FOR PURPOSES UNRELATED TO THE STATE OF VERMONT'S ACQUISITION OF LAND AND RIGHTS FOR THIS PROJECT.

REPLACEMENT SHEETS ISSUED 02/24/2012

DATUM

VERTICAL NAVD88

HORIZONTAL NAD83(92)

FOR EROSION CONTROL NOTES AND DETAILS SEE ROW SHEET 36 OF 107

FOR LANDSCAPING NOTES AND DETAILS SEE ROW SHEET 47 OF 107

FOR DRAINAGE NOTES AND DETAILS SEE ROW SHEET 24 OF 107

FOR CONSTRUCTION NOTES AND DETAILS SEE ROW SHEET 24 OF 107

0 10 20

SCALE 1:250

Stantec

THIS SHEET FOR R.O.W. USE ONLY

STA 18+600 TO 18+770

PROJECT NAME: DANVILLE

PROJECT NUMBER: F EGC 028-3(32)

FILE NAME: ...\ROW\row_plan_plot_sheets.ptf

DESIGN SUPERVISOR: GARY SANTY

DESIGNED BY: STANTEC

RIGHT-OF-WAY PLAN RPS-2

PLOT DATE: 2/24/2012

DRAWN BY: STANTEC

CHECKED BY: STANTEC

SHEET 34 OF 306

2/24/2012 4:04:36 PM V:\1953\active\195310033_10192\Highway\PlotFiles\ROW\row_plan_plot_sheets.ptf

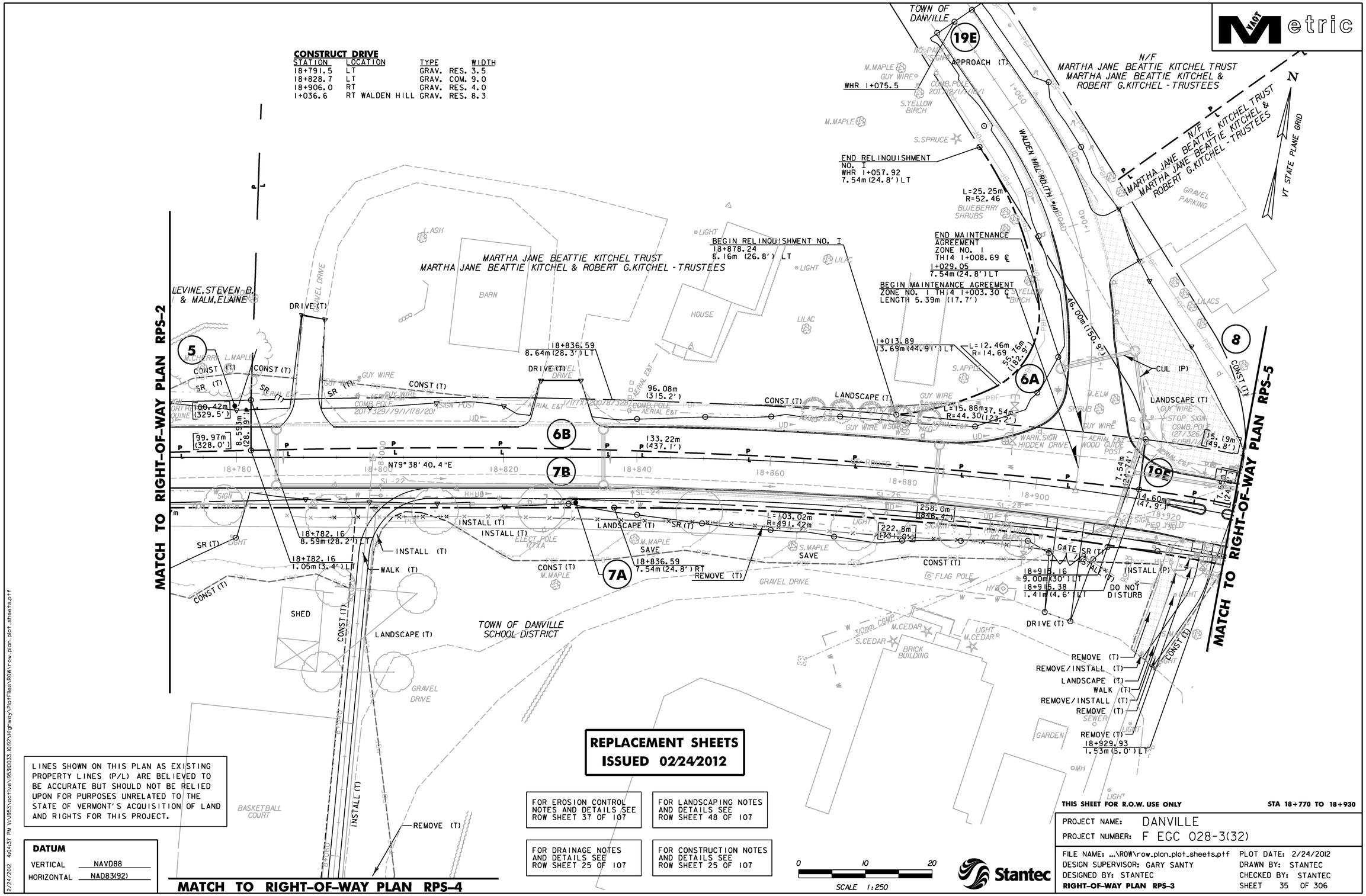

REPLACEMENT SHEETS
ISSUED 02/24/2012

LINES SHOWN ON THIS PLAN AS EXISTING PROPERTY LINES (P/L) ARE BELIEVED TO BE ACCURATE BUT SHOULD NOT BE RELIED UPON FOR PURPOSES UNRELATED TO THE STATE OF VERMONT'S ACQUISITION OF LAND AND RIGHTS FOR THIS PROJECT.

DATUM

VERTICAL NAVD88
HORIZONTAL NAD83(92)

FOR EROSION CONTROL NOTES AND DETAILS SEE ROW SHEET 37 OF 107

FOR LANDSCAPING NOTES AND DETAILS SEE ROW SHEET 48 OF 107

FOR DRAINAGE NOTES AND DETAILS SEE ROW SHEET 25 OF 107

FOR CONSTRUCTION NOTES AND DETAILS SEE ROW SHEET 25 OF 107

MATCH TO RIGHT-OF-WAY PLAN RPS-4

THIS SHEET FOR R.O.W. USE ONLY **STA 18+770 TO 18+930**

PROJECT NAME: DANVILLE
PROJECT NUMBER: F EGC 028-3(32)

FILE NAME: ...\ROW\row_plan_plot_sheets.ptf
DESIGN SUPERVISOR: GARY SANTY
DESIGNED BY: STANTEC
RIGHT-OF-WAY PLAN RPS-3
PLOT DATE: 2/24/2012
DRAWN BY: STANTEC
CHECKED BY: STANTEC
SHEET 35 OF 306

Stantec

2/24/2012 4:04:37 PM V:\1953\active\195310033_10192\Highway\PlotFiles\ROW\row_plan_plot_sheets.ptf

N

VT STATE PLANE GRID

VAOT Metric

MATCH TO RIGHT-OF-WAY PLAN RPS-3

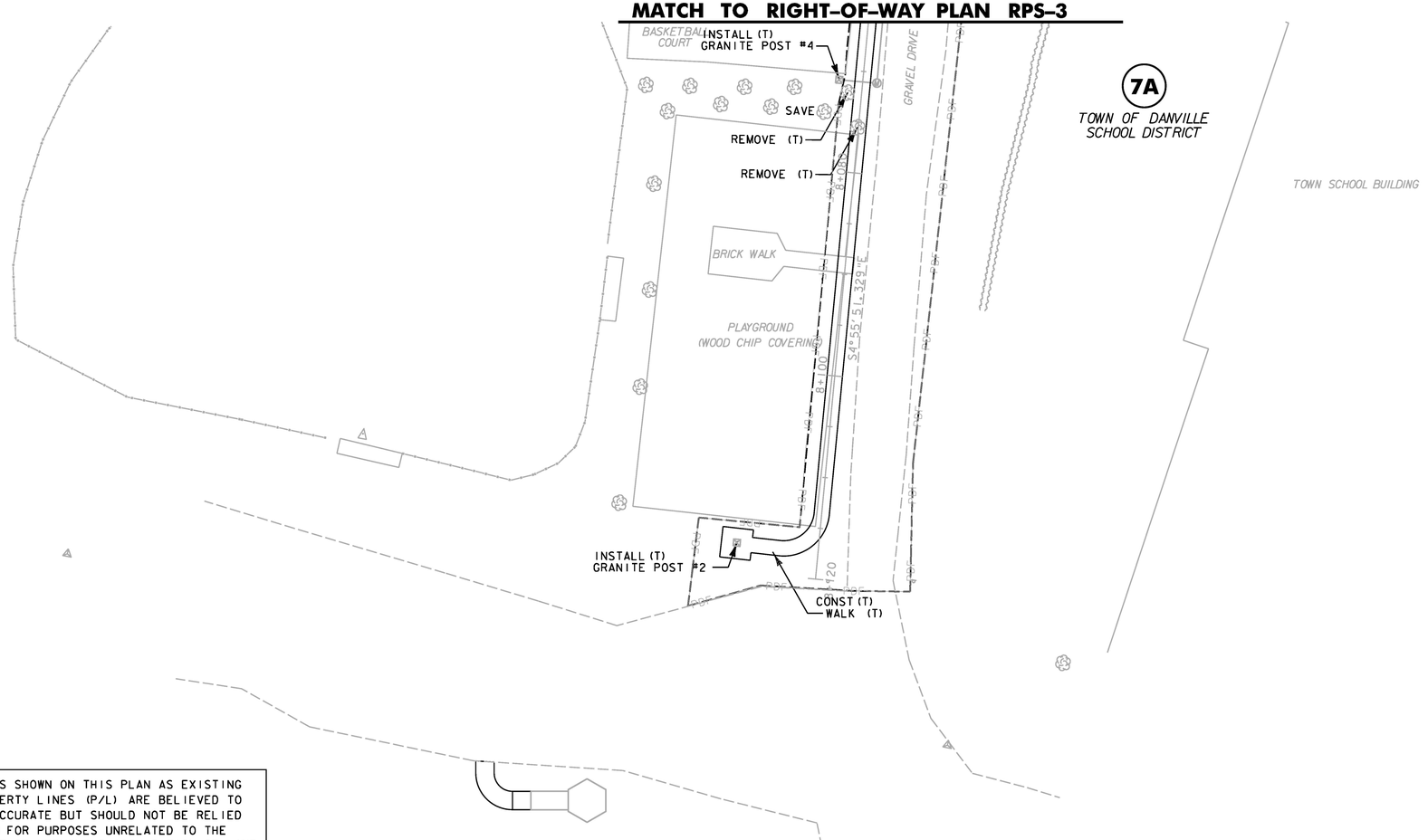

LINES SHOWN ON THIS PLAN AS EXISTING PROPERTY LINES (P/L) ARE BELIEVED TO BE ACCURATE BUT SHOULD NOT BE RELIED UPON FOR PURPOSES UNRELATED TO THE STATE OF VERMONT'S ACQUISITION OF LAND AND RIGHTS FOR THIS PROJECT.

DATUM

VERTICAL NAVD88

HORIZONTAL NAD83(92)

FOR EROSION CONTROL NOTES AND DETAILS SEE ROW SHEET 45 OF 107

FOR LANDSCAPING NOTES AND DETAILS SEE ROW SHEET 56 OF 107

REPLACEMENT SHEETS ISSUED 02/24/2012

0 10 20

SCALE 1:250

Stantec

THIS SHEET FOR R.O.W. USE ONLY

PROJECT NAME: DANVILLE

PROJECT NUMBER: F EGC 028-3(32)

FILE NAME: ...\ROW\row_plan_plot_sheets.ptf | PLOT DATE: 2/24/2012

DESIGN SUPERVISOR: GARY SANTY | DRAWN BY: STANTEC

DESIGNED BY: STANTEC | CHECKED BY: STANTEC

RIGHT-OF-WAY PLAN RPS-4 | SHEET 36 OF 306

2/24/2012 4:04:38 PM V:\0953\active\95300033.0192\Highway\Plotfiles\ROW\row_plan_plot_sheets.ptf

CONSTRUCT DRIVE

STATION	LOCATION	TYPE	WIDTH
18+958.4	LT	GRAV. RES.	4.9
18+961.8	RT	BIT. RES.	2.7
18+980.8	RT	BIT. RES.	3.6
18+994.7	LT	GRAV. COM.	7.6
19+007.0	RT	GRAV. RES.	7.2
19+017.3	RT	BIT. COM.	3.6
19+028.1	RT	BIT. COM.	12.0
19+050.9	RT	GRAV. COM.	7.2
19+055.8	LT	GRAV. COM.	7.2
19+063.8	RT	BIT. COM.	6.9

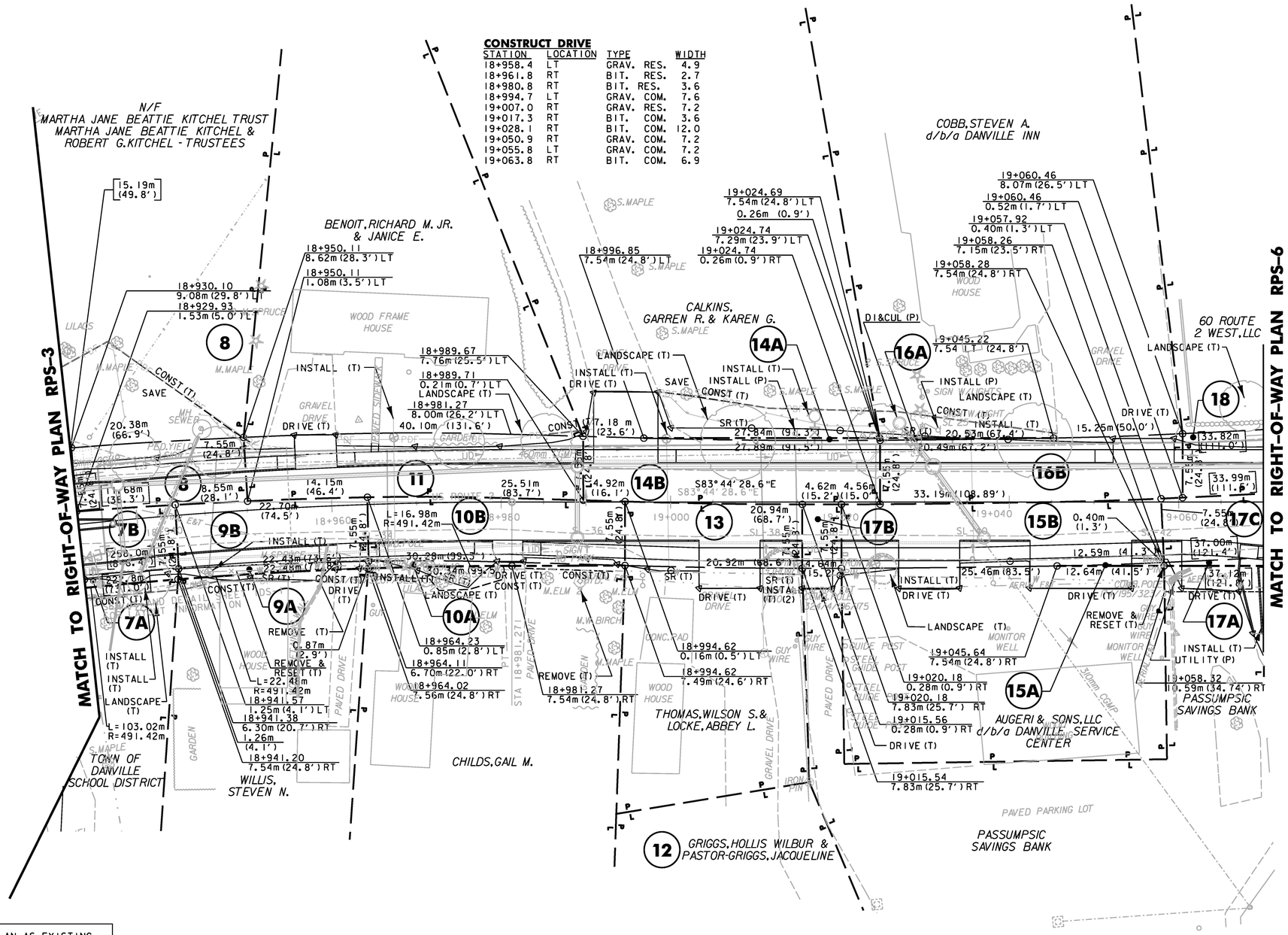

LINES SHOWN ON THIS PLAN AS EXISTING PROPERTY LINES (P/L) ARE BELIEVED TO BE ACCURATE BUT SHOULD NOT BE RELIED UPON FOR PURPOSES UNRELATED TO THE STATE OF VERMONT'S ACQUISITION OF LAND AND RIGHTS FOR THIS PROJECT.

REPLACEMENT SHEETS ISSUED 02/24/2012

DATUM

VERTICAL NAVD88

HORIZONTAL NAD83(92)

FOR EROSION CONTROL NOTES AND DETAILS SEE ROW SHEET 38 OF 107

FOR LANDSCAPING NOTES AND DETAILS SEE ROW SHEET 49 OF 107

FOR DRAINAGE NOTES AND DETAILS SEE ROW SHEET 26 OF 107

FOR CONSTRUCTION NOTES AND DETAILS SEE ROW SHEET 26 OF 107

0 10 20

SCALE 1:250

Stantec

THIS SHEET FOR R.O.W. USE ONLY

PROJECT NAME: DANVILLE

PROJECT NUMBER: F EGC 028-3(32)

FILE NAME: ...\ROW\row_plan_plot_sheets.ptf

DESIGN SUPERVISOR: GARY SANTY

DESIGNED BY: STANTEC

RIGHT-OF-WAY PLAN RPS-5

PLOT DATE: 2/24/2012

DRAWN BY: STANTEC

CHECKED BY: STANTEC

SHEET 37 OF 306

2/24/2012 4:04:38 PM V:\1953\active\195310033_10192\Highway\PlotFiles\ROW\row_plan_plot_sheets.ptf

CONSTRUCT DRIVE

STATION	LOCATION	TYPE	WIDTH
19+088.2	LT	GRAV. RES	3.6
19+100.1	LT	BIT. COMM	7.2
19+130.3	LT	GRAV. COMM	9.0
19.156.2	LT	BIT. COMM	15.0
19+204.1	LT	BIT. COMM	9.1
19+226.6	LT	GRAV. RES	6.0
19+079.4	RT	BIT. COMM	7.8
19+258.7	RT	GRAV. RES	3.1

VAOT Metric

N

VT STATE PLANE GRID

MATCH TO RIGHT-OF-WAY PLAN RPS-5

MATCH TO RIGHT-OF-WAY PLAN RPS-6

MATCH TO RIGHT-OF-WAY PLAN RPS-7

BEGIN MAINTENANCE AGREEMENT ZONE NO.2 TH 94 2+008.08 ℄

END MAINTENANCE AGREEMENT ZONE NO.2 TH 94 2+010.8 ℄ LENGTH=2.73m (9.0')

19+115.91 2.77m (9.1') LT

19+094.79 10.04m (32.9') LT

19+110.00 11.53m (37.8') LT

1.16m (3.8')

19+110.00 10.37m (34.0') LT

19+095.65 2.51m (8.2') LT

19+115.85 4.785m (15.7') RT CONST (T)

19+094.50 2.477 (8.1') LT

REMOVE (T)

REMOVE (T)

19+094.86 5.062m (16.6') RT

19+077.33 9.00m (29.52') RT

REMOVE (T)

33.82m (111.0')

INSTALL (T)

DRIVE (T)

14.68m (48.2')

INSTALL (T)

INSTALL (T)

TOWN OF DANVILLE (TOWN HALL)

60 ROUTE 2 WEST, LLC

REMOVE (T)

INSTALL (P) INSTALL (T) 20.36m (66.8')

19A

L=20.35m R=279.53m

18

17C

19C

20B

30B

20.56m (67.5')

20.45m (67.1')

14.98m (49.1')

21.34m (70.0')

L=22.50m R=297.69m

25.40m (83.3')

37.00m (121.4')

INSTALL (T) 37.12m UTILITY (P) (121.8')

INSTALL (P)

LANDSCAPE (T)

17A

19+094.83 9.038m (29.7') RT

19+094.80 14.40m (47.24') RT

19+074.46 10.59m (34.74') RT

REMOVE (T)

PASSUMPSIC SAVINGS BANK

BRICK BUILDING

INSTALL (T)

INSTALL (P)

REMOVE & RESET (T)

19+116.56 13.47m (34.4') RT

UTILITY (P)

LADIES LIBRARY ASSOCIATION, INC. (POPE MEMORIAL LIBRARY) et al

PARCEL 20A, LANDSCAPE (T): NEW APPLE TREE TO BE PLANTED BETWEEN APPROX. STATIONS 19+094.83 RT AND 19+116.56 RT. FINAL LOCATION TO BE DETERMINED BY PROPERTY OWNER AND RESIDENT ENGINEER

N/F DANVILLE ECUMENICAL COMMUNITY CENTER

WOOD BUILDING

48

19+131.20 11.53m (37.8') LT

1.26m (4.1')

19+131.20 10.27m (33.7') LT

19+131.04 2.73m (9.0') LT

DAUTEUIL, JOHN E.& BEATTIE, THOMAS C.

INSTALL (T)

END MAINTENANCE AGREEMENT ZONE NO.3 TH 2 3+008.72 ℄ LENGTH=4.92m (16.1')

BEGIN MAINTENANCE AGREEMENT ZONE NO.3 TH 2 3+003.80 ℄

BEATTIE, MARTIN & BEATTIE, PLYNN

30A

19+164.81 11.53m (37.8') LT

2.24m (7.3')

L=32.28m R=279.53m

19+164.80 9.29m (30.5') LT

19+164.29 1.76m (5.8') LT

32.28m (105.9')

32.48m (106.6')

30B

P33.01m (108.3')

19+153.16 11.13m (36.51') RT

121.912m (400.0')

19B

19+177.51 12.63m (41.4') RT

123.57m (405.4')

L=8.04m R=79.95m

19+145.41 10.92m (35.82') RT

INSTALL (T)

WALK (T)

CUL (P)

TOWN OF DANVILLE (DANVILLE GREEN)

INSTALL (T)

APPROACH (T)

N/F MARTIN J. BEATTIE TRUST DATED 3/25/03, MARTIN J. BEATTIE, TRUSTEE & CATHERINE J. BEATTIE TRUST DATED 3/25/03, CATHERINE J. BEATTIE, TRUSTEE

HILL STREET (TH #2)

3+060

3+040

3+020

N/F TWENTY HILL STREET, LLC

APPROACH (T)

TOWN OF DANVILLE

19+210.61 7.54m (24.8') LT

0.34m (1.1')

19+210.56 7.21m (23.7') LT

19+210.58 0.33m (1.1') RT

DAUTEUIL, JOHN E.& BEATTIE, THOMAS C.- LESSOR DIAMOND HILL STORE, LLC - LESSEE

L=22.01m R=283.51m

INSTALL (P)

19+187.90 7.54m (24.8') LT

31A

DRIVE (T)

SR (T)

INSTALL (P)

7.50m (24.6')

15.11m (49.6')

22.12m (72.6')

22.11m (72.5')

31B

19F

31.00m (101.7')

19+153.16

19+220.96 11.45m (37.5') RT

19+210.65 12.64m (41.4') RT

L=10.67m R=57.18m

19+201.72 13.10m (42.9') RT

19+180.32 8.10m (26.6') LT

INSTALL (P) INSTALL (T)

19+179.63 REMOVE (T)

0.58m (1.9') LT

INSTALL (P)

BEGIN MAINTENANCE AGREEMENT ZONE NO. 4 TH 3 4+009.98 ℄

END MAINTENANCE AGREEMENT ZONE NO. TH 3 4+012.44 ℄ LENGTH=2.46m (8.1')

APPROACH (T)

GARLAND, JUDY R. A/K/A JUDY RANDELL

IRON PIPE

19+240.66 0.25m (0.8') RT

19+240.68 7.79m (25.6') RT

19+254.15 7.54m (24.8') LT

INSTALL (T)

BEGIN MAINTENANCE AGREEMENT ZONE NO.5 TH 88 5+008.43 ℄

INSTALL (P) INSTALL (T) 48.68m (159.7')

CONST (T)

32A

L=42.52m R=283.51m

WALK (T)

DRIVE (T)

48.77m (160.0')

32E

32B

33

L=9.64m (64.4')

L=62.26m (204.3')

SR (T)

CONST DRIVE (T)

INSTALL (T) 0.53m (1.7')

19+254.15 7.82m (25.6') LT

EXCEPT & RESERVE

BRINKERHOFF, ERIC & HURST-BRINKERHOFF, PAMEL, d/b/a MELODY HILL FARM

19+240.53 8.309m (27.3') RT

INSTALL (T)

CUL (P)

WALK (T)

TOWN OF DANVILLE

END MAINTENANCE AGREEMENT ZONE NO.5 TH 88 5+010.76 ℄ LENGTH=2.33m (7.6')

MATCH TO RIGHT-OF-WAY PLAN RPS-7

LINES SHOWN ON THIS PLAN AS EXISTING PROPERTY LINES (P/L) ARE BELIEVED TO BE ACCURATE BUT SHOULD NOT BE RELIED UPON FOR PURPOSES UNRELATED TO THE STATE OF VERMONT'S ACQUISITION OF LAND AND RIGHTS FOR THIS PROJECT.

REPLACEMENT SHEETS ISSUED 02/24/2012

DATUM

VERTICAL NAVD88

HORIZONTAL NAD83(92)

FOR EROSION CONTROL NOTES AND DETAILS SEE ROW SHEET 39 OF 107

FOR LANDSCAPING NOTES AND DETAILS SEE ROW SHEET 50 OF 107

FOR DRAINAGE NOTES AND DETAILS SEE ROW SHEET 27 OF 107

FOR CONSTRUCTION NOTES AND DETAILS SEE ROW SHEET 27 OF 107

0 10 20

SCALE 1:250

Stantec

THIS SHEET FOR R.O.W. USE ONLY

STA 19+070 TO 19+260

PROJECT NAME: DANVILLE

PROJECT NUMBER: F EGC 028-3(32)

FILE NAME: ...\ROW\row_plan_plot_sheets.ptf

PLOT DATE: 2/24/2012

DESIGN SUPERVISOR: GARY SANTY

DRAWN BY: STANTEC

DESIGNED BY: STANTEC

CHECKED BY: STANTEC

RIGHT-OF-WAY PLAN RPS-6

SHEET 38 OF 306

2/24/2012 4:04:39 PM V:\9531\active\95310033.0192\Highways\Plotfiles\ROW\row_plan_plot_sheets.ptf

MATCH TO RIGHT-OF-WAY PLAN RPS-6

FOR EROSION CONTROL NOTES AND DETAILS SEE ROW SHEET 40 OF 107

FOR DRAINAGE NOTES AND DETAILS SEE ROW SHEET 29 OF 107

FOR LANDSCAPING NOTES AND DETAILS SEE ROW SHEET 51 OF 107

FOR CONSTRUCTION NOTES AND DETAILS SEE ROW SHEET 28 OF 107

MATCH TO RIGHT-OF-WAY PLAN RPS-6

MATCH TO RIGHT-OF-WAY PLAN RPS-6

VAOT Metric

N

VT STATE PLANE GRID

19+117.77
20.68m
(67.85') RT

LADIES LIBRARY ASSOCIATION, INC. AND LADIES LIBRARY ASSOC. OF DANVILLE n/k/a POPE MEMORIAL LIBRARY ASSOC., INC.

4.83 RT
RT. TO BY PARK AND EER

20A

21

HAMILTON HOUSE BED & BREAKFAST, LLC

22

METHODIST SOCIETY IN DANVILLE, a.k.a. DANVILLE METHODIST CHURCH, INC.

23

BALIVET, ERNEST T.

24

ALICE M. HAFNER 1996 REVOCABLE TRUST

19B

TOWN OF DANVILLE (DANVILLE GREEN)

N/F CATHERINE J. BEATTIE TRUST OF MARCH 25, 2003
CATHERINE J. & MARTIN J. BEATTIE TRUSTEES - LESSOR
UNITED STATES POST OFFICE - LESSEE

26

DORSEY VERMONT REALTY TRUST
JEANNE COLBATH - TRUSTEE

27

MOORE, HEIDI

28

WASHBURN LODGE #92 FREE AND ACCEPTED MASONS

29

CRUESS, WILLIAM J. & CRUESS, ALICE L.

33

BRINKERHOFF, ERIC & HURST-BRINKERHOFF, PAMELA d/b/a MELODY HILL FARM

PARK STREET (TH #94)

PEACHAM RD. (TH #31)

SMITH ST. (TH #88)

BRAINERD ST. (TH #1)

TH • 94 PARK ST.

MATCHLINE A-A

MATCHLINE A-A

CONSTRUCT DRIVE

STATION	LOCATION	TYPE	WIDTH
2+076.8	RT	GRAV. RES.	4.4
2+096.7	RT	GRAV. COM	9.3
2+119.5	RT	GRAV. RES	2.6
2+184.2	RT	GRAV. COM	26.6
2+224.7	RT	BIT. RES	4.7
5+074.2	RT	GRAV. RES	14.9
5+060.7	LT	GRAV. COM	4.9

REPLACEMENT SHEETS ISSUED 02/24/2012

DATUM

VERTICAL NAVD88
HORIZONTAL NAD83(92)

LINES SHOWN ON THIS PLAN AS EXISTING PROPERTY LINES (P/L) ARE BELIEVED TO BE ACCURATE BUT SHOULD NOT BE RELIED UPON FOR PURPOSES UNRELATED TO THE STATE OF VERMONT'S ACQUISITION OF LAND AND RIGHTS FOR THIS PROJECT.

0 10 20
SCALE 1:250

Stantec

THIS SHEET FOR R.O.W. USE ONLY

PROJECT NAME: DANVILLE
PROJECT NUMBER: F EGC 028-3(32)

FILE NAME: ...\ROW\row_plan_plot_sheets.ptf
PLOT DATE: 2/24/2012
DESIGN SUPERVISOR: GARY SANTY
DRAWN BY: STANTEC
DESIGNED BY: STANTEC
CHECKED BY: STANTEC
RIGHT-OF-WAY PLAN RPS-7
SHEET 39 OF 306

2/24/2012 4:04:41 PM V:\1953\active\195300033.0192\Highway\PlotFiles\ROW\row_plan_plot_sheets.ptf

CONSTRUCT DRIVE

STATION	LOCATION	TYPE	WIDTH
19+266.1	LT	BIT. RES.	3.0
19+347.4	LT	GRAV. COM.	4.3
19+359.3	LT	GRAV. COM.	4.1
19+336.6	RT	BIT. RES.	4.2
19+384.8	RT	GRAV. RES.	7.2

VT STATE PLANE GRID

MATCH TO RIGHT-OF-WAY PLAN RPS-6

MATCH TO RIGHT-OF-WAY PLAN RPS-9

GARLAND, JUDY R. A/K/A JUDY RANDELL

ROGERS, JAY A. & MAUREEN P.

SWEENEY, PHYLLIS KEHLEY

FRAIN, JEROME P.

BRINKERHOFF, ERIC & HURST-BRINKERHOFF, PAMELA d/b/a MELODY HILL FARM

TOWLE, DAVID A.& SHELLEY R.

KEEFE, THOMAS J. a.k.a. KEEFE, THOMAS J., JR.

TOWN OF DANVILLE

WOODWARD, LEONARD F. & RUTH N.

STUART V. & JUDITH A. SALAMANDRA

CORSO, JUDITH A. SALAMANDRA

LINES SHOWN ON THIS PLAN AS EXISTING PROPERTY LINES (P/L) ARE BELIEVED TO BE ACCURATE BUT SHOULD NOT BE RELIED UPON FOR PURPOSES UNRELATED TO THE STATE OF VERMONT'S ACQUISITION OF LAND AND RIGHTS FOR THIS PROJECT.

DATUM

VERTICAL NAVD88

HORIZONTAL NAD83(92)

FOR EROSION CONTROL NOTES AND DETAILS SEE ROW SHEET 41 OF 107

FOR LANDSCAPING NOTES AND DETAILS SEE ROW SHEET 52 OF 107

FOR DRAINAGE NOTES AND DETAILS SEE ROW SHEET 30 OF 107

FOR CONSTRUCTION NOTES AND DETAILS SEE ROW SHEET 30 OF 107

REPLACEMENT SHEETS ISSUED 02/24/2012

0 10 20

SCALE 1:250

Stantec

THIS SHEET FOR R.O.W. USE ONLY STA 19+260 TO 19+450

PROJECT NAME: DANVILLE

PROJECT NUMBER: F EGC 028-3(32)

FILE NAME: ...\ROW\row_plan_plot_sheets.ptf PLOT DATE: 2/24/2012

DESIGN SUPERVISOR: GARY SANTY DRAWN BY: STANTEC

DESIGNED BY: STANTEC CHECKED BY: STANTEC

RIGHT-OF-WAY PLAN RPS-8 SHEET 40 OF 306

2/24/2012 4:04:42 PM V:\1953\active\195300033.0192\Highway\PlotFiles\ROW\row_plan_plot_sheets.ptf

CONSTRUCT DRIVE

STATION	LOCATION	TYPE	WIDTH
19+468.1	LT	GRAV. RES.	5.8
19+483.8	LT	GRAV. RES.	12.2
19+489.8	RT	BIT. COM.	3.8
19+528.5	RT	BIT. COM.	7.2
19+560.7	RT	GRAV. RES.	7.2
19+562.1	LT	GRAV. RES.	12.2

N

VT STATE PLANE GRID

MATCH TO RIGHT-OF-WAY PLAN RPS-8

MATCH TO RIGHT-OF-WAY PLAN RPS-10

WOODWARD, LEONARD F. & RUTH N.

HUDSON, ERIC R. & HUDSON, SPENCER K.

STATE OF VERMONT

TELEPHONE OPERATING SYSTEMS OF VERMONT LLC

TOWN OF DANVILLE

DREW, BLAINE EVERETT

CORSO, STUART V. & JUDITH A. SALAMANDRA

OUR LADY QUEEN OF PEACE PARISH CHARITABLE TRUST
MATANO, SALVATORE R. - TRUSTEE

19+472.02 7.63m (25.0') LT
19+472.00 0.08m (0.3') LT
19+566.60 7.71m (25.3') LT
19+566.57 0.17m (0.6') LT
19+566.54 7.37m (24.2') RT
19+551.48 0.25m (0.8') LT
19+560.56 7.73m (25.3') LT
19+551.43 7.30m (24.0') RT

NOTE: TWO (2) TREES TO BE REMOVED

INSTALL (T)
CONST (T)
DRIVE (T)
SR (T)
DIT&DR (P)
LANDSCAPE (T)
DO NOT DISTURB
REMOVE (T)
DO NOT DISTURB ITEMS
GRANITE SIGN
CHURCH
LIGHT

[31.90m (104.7')]
[30.12m (98.8')]
[41.13m (134.9')]
[94.58m (310.3')]
[90.40m (296.6')]
[106.56m (349.6')]
[53.22m (109.0')]
L=33.38m
L=5.96m

N60°59'53.0"E
38.46m (126.2')
29.99m (98.39')
29.95m (98.3')
29.96m (98.3')
38.45m (126.2')
11.01m (36.1')
15.10m (49.5')
11.11m (49.6')
0.06m (0.2')
0.25m (.8')
0.17m (0.6')

19+483.02 0.07m (0.23') LT
19+483.03 7.48m (24.5') RT
19+483.03 7.54m (24.8') RT
19+521.48 0.30m (1.0') LT
19+521.48 7.25m (23.8') RT
19+521.48 0.29m (1.0')
19+521.48 7.54m (24.8') RT
19+551.44 7.54m (24.8') RT
19+566.55 7.54m (24.8') RT
19+560.56 7.54m (24.8') RT

39 40B 40A 41 42B 42A 43B 43A 19J 19I 44A

HEDGE
WOOD HOUSE
FIELD DRIVE
GRAVEL DRIVE
PAVED DRIVE
WOOD BUILDING
M.APPLE
M.MAPLE
M.W.BIRCH
M.B.SPRUCE
3 M.W.BIRCH
MONITOR WELL
BANK SIGN
SUSPRUCE
COMB.POLE 320T/265/182/168 W/SUBT
COMB.POLE 320T/265/182/168 W/SUBT
COMB.POLE 320T/IBS-1/IB2-1
GUY WIRE
AERIAL E&T
UD
W
WSO
HH-15
BOT WIRES
BOX BND.MKR.
AOT BND

LINES SHOWN ON THIS PLAN AS EXISTING PROPERTY LINES (P/L) ARE BELIEVED TO BE ACCURATE BUT SHOULD NOT BE RELIED UPON FOR PURPOSES UNRELATED TO THE STATE OF VERMONT'S ACQUISITION OF LAND AND RIGHTS FOR THIS PROJECT.

DATUM

VERTICAL NAVD88
HORIZONTAL NAD83(92)

FOR EROSION CONTROL NOTES AND DETAILS SEE ROW SHEET 42 OF 107

FOR LANDSCAPING NOTES AND DETAILS SEE ROW SHEET 53 OF 107

FOR DRAINAGE NOTES AND DETAILS SEE ROW SHEET 31 OF 107

FOR CONSTRUCTION NOTES AND DETAILS SEE ROW SHEET 31 OF 107

REPLACEMENT SHEETS ISSUED 02/24/2012

0 10 20
SCALE 1:250

Stantec

THIS SHEET FOR R.O.W. USE ONLY **STA 19+450 TO 19+590**

PROJECT NAME: DANVILLE
PROJECT NUMBER: F EGC 028-3(32)

FILE NAME: ...\ROW\row_plan_plot_sheets.ptf PLOT DATE: 2/24/2012
DESIGN SUPERVISOR: GARY SANTY DRAWN BY: STANTEC
DESIGNED BY: STANTEC CHECKED BY: STANTEC
RIGHT-OF-WAY PLAN RPS-9 SHEET 41 OF 306

2/24/2012 4:04:43 PM V:\0953\active\95300033.0192\Highway\Plotfiles\ROW\row_plan_plot_sheets.ptf

CONSTRUCT DRIVE

STATION	LOCATION	TYPE	WIDTH
19+675.0	LT	GRAV. RES.	5.6

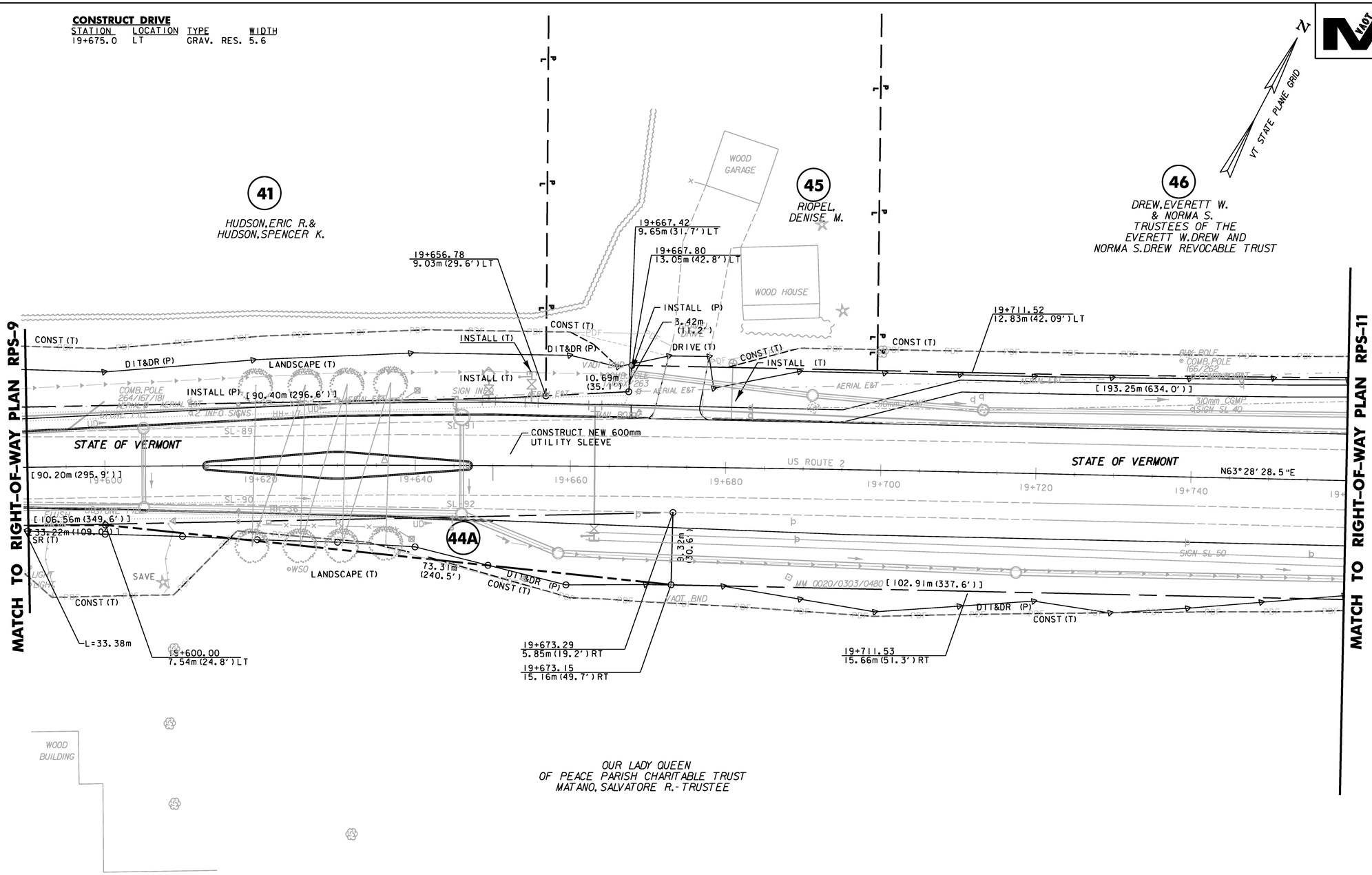

LINES SHOWN ON THIS PLAN AS EXISTING PROPERTY LINES (P/L) ARE BELIEVED TO BE ACCURATE BUT SHOULD NOT BE RELIED UPON FOR PURPOSES UNRELATED TO THE STATE OF VERMONT'S ACQUISITION OF LAND AND RIGHTS FOR THIS PROJECT.

DATUM

VERTICAL NAVD88

HORIZONTAL NAD83(92)

FOR EROSION CONTROL NOTES AND DETAILS SEE ROW SHEET 43 OF 107

FOR LANDSCAPING NOTES AND DETAILS SEE ROW SHEET 54 OF 107

FOR DRAINAGE NOTES AND DETAILS SEE ROW SHEET 32 OF 107

FOR CONSTRUCTION NOTES AND DETAILS SEE ROW SHEET 32 OF 107

REPLACEMENT SHEETS ISSUED 02/24/2012

0 10 20

SCALE 1:250

Stantec

THIS SHEET FOR R.O.W. USE ONLY

STA 19+590 TO 19+760

PROJECT NAME: DANVILLE

PROJECT NUMBER: F EGC 028-3(32)

FILE NAME: ...\ROW\row_plan_plot_sheets.ptf

DESIGN SUPERVISOR: GARY SANTY

DESIGNED BY: STANTEC

RIGHT-OF-WAY PLAN RPS-10

PLOT DATE: 2/24/2012

DRAWN BY: STANTEC

CHECKED BY: STANTEC

SHEET 42 OF 306

2/24/2012 4:04:44 PM V:\1953\active\195310033_10192\Highway\PlotFiles\ROW\row_plan_plot_sheets.ptf

MATCH TO RIGHT-OF-WAY PLAN RPS-10

DREW.EVERETT W. & NORMA S. TRUSTEES OF THE EVERETT W.DREW AND NORMA S.DREW REVOCABLE TRUST

46

19+825.76
15.06m (49.4') LT

INSTALL & MAINTAIN (P)

DRIVE (T)

INSTALL & MAINTAIN (P)

DRIVE (T)

CONST (T)

[193.25m (634.0')]

310mm CGMP

N/F
CATHERINE J. BEATTIE TRUST

19+859.92
16.10m
(52.8') LT

AERIAL E&T

WOOD BUILDING

VT STATE PLANE GRID

N

P L

19+776.23
15.30m (50.2') RT

19+844.16
15.26m (50.1') RT

N63°28'28.5"E

31.35m (102.8')

STATE OF VERMONT

US ROUTE 2

19+720 19+800 19+820 19+840 19+860 19+880 19+900 19+920 19+940

[102.91m (337.6')]

CONST (T)

67.93m (222.9')

15.24m (50.0')

VAOT BND

CUL (P)

CUL (P)

44B

OUR LADY QUEEN OF PEACE PARISH CHARITABLE TRUST
MATANO, SALVATORE R.- TRUSTEE

END R.O.W. PROJECT
F EGC 028-3(32)
STA 19+859.40,
15.25m, (50.0') RT

LANDSCAPE (T)

86.08m (282.4')

SR (T)

19K

TOWN OF DANVILLE

85.43m (280.3')

19+842.23
100.67m (330.3') RT

19+790.00
100.28m (329.0') RT

52.73m (173.0')

CONSTRUCT DRIVE

STATION	LOCATION	TYPE	WIDTH
19+769.1	LT	GRAV. RES.	4.0
19+800.9	LT	GRAV. RES.	3.2
19+851.1	RT	GRAV. COMM.	5.8

STATE OF VERMONT

RR ROW

LINES SHOWN ON THIS PLAN AS EXISTING PROPERTY LINES (P/L) ARE BELIEVED TO BE ACCURATE BUT SHOULD NOT BE RELIED UPON FOR PURPOSES UNRELATED TO THE STATE OF VERMONT'S ACQUISITION OF LAND AND RIGHTS FOR THIS PROJECT.

FOR CONSTRUCTION NOTES AND DETAILS SEE ROW SHEET 33 OF 107

FOR DRAINAGE NOTES AND DETAILS SEE ROW SHEET 33 OF 107

FOR LANDSCAPING NOTES AND DETAILS SEE ROW SHEET 55 OF 107

FOR EROSION CONTROL NOTES AND DETAILS SEE ROW SHEET 44 OF 107

DATUM

VERTICAL NAVD88

HORIZONTAL NAD83(92)

REPLACEMENT SHEETS ISSUED 02/24/2012

0 10 20

SCALE 1:250

Stantec

THIS SHEET FOR R.O.W. USE ONLY

STA 19+760 TO 19+910

PROJECT NAME: DANVILLE

PROJECT NUMBER: F EGC 028-3(32)

FILE NAME: ...\ROW\row_plan_plot_sheets.ptf
DESIGN SUPERVISOR: GARY SANTY
DESIGNED BY: STANTEC
RIGHT-OF-WAY PLAN RPS-11

PLOT DATE: 2/24/2012
DRAWN BY: STANTEC
CHECKED BY: STANTEC
SHEET 43 OF 306

2/24/2012 4:04:44 PM V:\0953\active\95330033.0192\Highway\Plotfiles\ROW\row_plan_plot_sheets.ptf

GPS CONTROL POINTS

HVCTRL # 1

STANDARD DISK STAMPED

MS2 RESET
NORTH = 212285.615
EAST = 526618.436
ELEV. = 443.758

TO REACH FROM THE POST OFFICE IN THE CENTER OF DANVILLE, GO NORTH ALONG RAILROAD STREET FOR 0.1 MI (0.2 KM) TO THE INTERSECTION OF U.S. RTE. 2. TURN LEFT, WEST ALONG U.S. RTE 2 FOR 1.25 MI (2.01KM) YO THE INTERSECTION OF THE LAMOILLE VALLEY RAILROAD CROSSING, A GRAVEL DRIVE SOUTH TO DANA CAULKINS RESIDENCE, AND SUTE OF THE MARK ON THE SOUTH SIDE OF U.S. RTE. 2. IT IS ALSO 1.45 MI (2.33KM) EAST ALONG U.S. RTE 2 FROM THE POST OFFICE IN WEST DANVILLE. STATION IS SET IN THE TOP OF A 3.7 M (12.1 FT) X 4.0 M (13.1 FT) ROCK OUTCROP WHICH PROJECTS 0.5 M (1.6 FT). IT IS THE MOST NORTHEASTERLY ONE OF 3 ROCK OUTCROPS IN THE IMMEDIATE AREA. LOCATED 73.91 M (242.49 FT) SOUTH OF THE CENTERLINE OF U.S. RTE. 2, 41.91 M (137.50 FT) SOUTHEAST OF THE SOUTHEAST RAIL OF THE LAMOILLE VALLEY RAILROAD, 46.48 M (152.49 FT) EAST-SOUTHEAST OF THE CENTERLINE OF DANA CAULKINS DRIVEWAY, 59.59 M (195.50 FT) SOUTHEAST OF A POLE NUMBER 1/208 WITH TRANSFORMER AND 1.46 M (4.79 FT) EAST OF FIBERGLASS

HVCTRL # 8

STANDARD DISK STAMPED

PRAIRIE
NORTH = 214269.301
EAST = 528830.177
ELEV. = 502.113

DANVILLE, DANVILLE GREEN, FROM THE INTERSECTION OF U.S. RTE 2 AND PRAIRIE ROAD TO NORTH DANVILLE. GO NORTH 0.65 MI ALONG ROAD TO NORTH DANVILLE TO A FORK IN ROAD. THENCE NORTHEASTERLY FOR APPROXIMATELY 0.7 MI TO WINDSWEPT FARM OWNED BY R.A MUSGROVE; APPROX. 900 FT NORTHWEST OF FARMHOUSE; 120 FT EAST OF NORTH-SOUTH FENCE LINE, NEAR HIGH POINT OF HILL AND SET IN FLUSH LEDGE OUTCROP; A STANDARD VHD DISK STAMPED "PRAIRIE 1962". REVISED AND ADDITIONAL TIES FOLLOW; 98 FT EAST OF N-S FENCELINE AND STONE WALL; 330 FT +/- WEST OF A STONE PILE; 215 FT +/- NORTHEAST OF AN OLD TRUCK BODY; 133 FT EAST NORTHEAST OF A LONE 10 IN. SPRUCE; 122 FT NORTHEAST OF A 1 IN IRON PIPE WHICH PROJECTS ONE FOOT ABOVE GROUND (PIPE IS 1 FT SOUTHWEST OF A LONE FENCE POST).

• DESCRIPTION PROVIDED BY VERMONT AGENCY OF TRANSPORTATION GEODETIC SURVEY UNIT

TRAVERSE TIES

HVCTRL # 9

STANDARD DISK STAMPED

GARY
NORTH = 211252.354
EAST = 529578.285
ELEV. = 408.885

DANVILLE, DANVILLE GREEN, FROM THE INTERSECTION OF U.S. RTE 2 AND MORSES MILL ROAD (9CL 2-1) (ROAD TO SOUTH DANVILLE) GO SOUTHEAST ALONG MORSES MILL ROAD FOR 0.85 MI (1.37 KM) TO THE INTERSECTION OF GREENBANKS HOLLOW ROAD (CL 3-54). THENCE SOUTH ALONG GREENBANKS HOLLOW FOR 0.1 MI (0.2 KM), 24 FT (7.3 M) WEST OF THE CENTERLINE OF GREENBANKS HOLLOW ROAD, 15 FT (4.6 M) SOUTH OF POLE 39/C, 68 FT (20.7 M) NORTH OF POLE 32, 8 FT (2.4 M) WEST OF A N-S FENCE.

HVCTRL # 203

STANDARD DISK STAMPED

C22 1935
NORTH = 211897.837
EAST = 528535.054
ELEV. = 419.876

TO REACH THE STATION FROM THE DANVILLE POST OFFICE, WHICH IS 0.05 MI (0.1 KM) SOUTH OF U.S. HIGHWAY 2. GO SOUTH ON THE PAVED ROAD FOR 0.25 MI (0.4 KM) TO TH MARK ON THE RIGHT ACROSS THE ROAD FROM THE OLD RAILROAD STATION. SET INTO THE TOP OF A ROUND CONCRETE MONUMENT 30 CM (0.1 FT) IN DIAMETER PROJECTING 10 CM (0.33 FT) ABOVE THE GROUND. LOCATED 29.3 M (96.0 FT) WEST FROM THE NORTHWEST CORNER OF OLD RAILROAD STATION, 20.1 M (66.0 FT) WEST-SOUTHWEST FROM A FIRE HYDRANT, 16.2 M (53.0 FT) WEST-NORTHWEST FROM THE CENTER OF ROAD AND TRACKS CROSSING, 13.7 M (45.0FT) WET-SOUTHWEST FROM A POWER POLE 19-13, 9.4 M (31.0 FT) WEST-NORTHWEST FROM A RAILROAD CROSSING SIGN,7.0 M (23.0 FT) NORTHEAST FROM THE NORTHEAST RAIL OF TRACKS, 0.8 M (2.6 FT) NORTH OF A WITNESS POST AND ABOUT 0.9 M (3.0 FT) ABOVE THE TRACKS.

TRAVERSE TIES

HCTRL # 2 WAS DESTROYED

HCTRL # 3 WAS NOT TIED

HCTRL #4

NORTH = 212412.969
EAST = 528287.746
ELEV. = 450.59

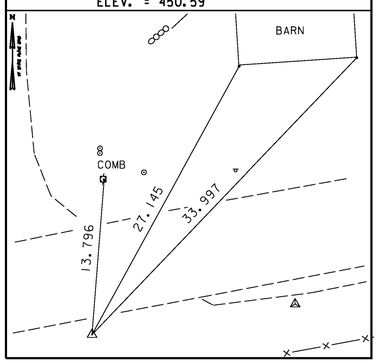

HCTRL # 5

NORTH = 212432.953
EAST = 528514.304
ELEV. = 436.229

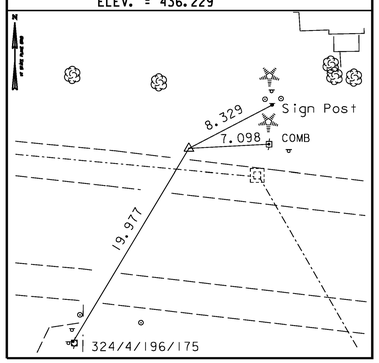

HCTRL # 6

NORTH = 212413.446
EAST = 528673.794
ELEV. = 431.757

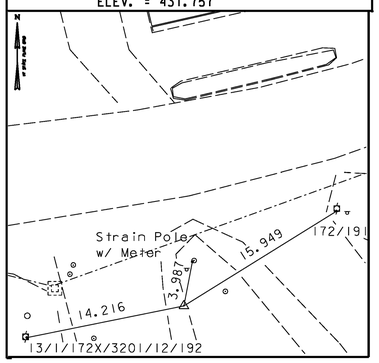

HCTRL # 7

NORTH = 212561.478
EAST = 528926.622
ELEV. = 411.553

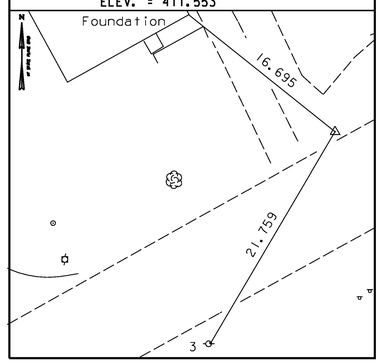

* MAIN TRAVERSE COMPLETED 09/25/95 BY R. MOREAU P.C. & A. MYERS

DATUM	
VERTICAL	NAVD 88
HORIZONTAL	NAD 83 (92)
ADJUSTMENT	Least Squares

PROJECT NAME: DANVILLE
PROJECT NUMBER: F EGC 028-3(32)

FILE NAME: ...\highway\PlotFiles\007 ties.ptf
PLOT DATE: 1/18/2011
DESIGN SUPERVISOR: VTRANS
DRAWN BY: VTRANS
DESIGNED BY: VTRANS
CHECKED BY: VTRANS
TIE SHEET TIE-1
SHEET 44 OF 306

1/18/2011 14:56 PM v:\1953\active\19530033.092\highway\PlotFiles\007 ties.ptf

ALIGNMENT TIES

PC 18+319.680
N = 212321.8931
E = 527822.1463

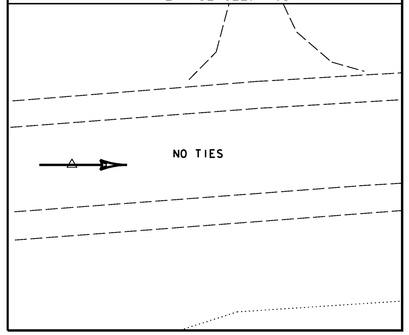

PT 18+608.096
N = 212386.3252
E = 528102.9370

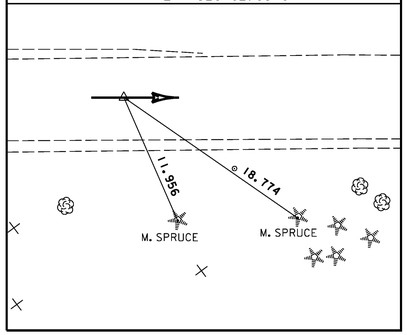

PC 18+650.890
N = 212392.4233
E = 528145.2943

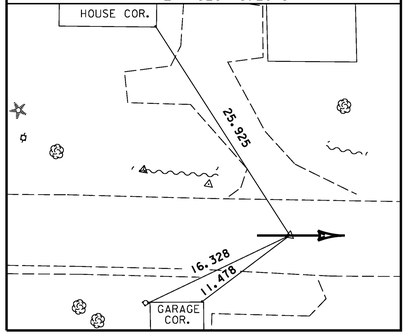

PT 18+716.815
N = 212403.0469
E = 528210.3537

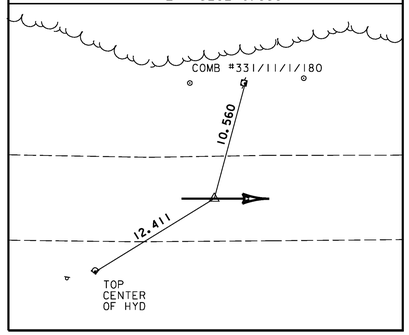

NOTE: ALIGNMENT WAS RUN ON DEC. 1, 2003 BY R.GILMAN PC, P.WINTERS, & D.BREER

ALIGNMENT TIES

PC 18+836.586
N = 212424.5762
E = 528328.1738

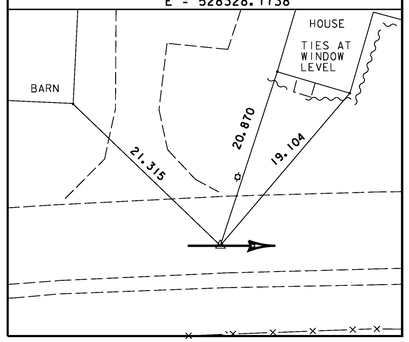

PT 18+981.271
N = 212429.7296
E = 528472.2603

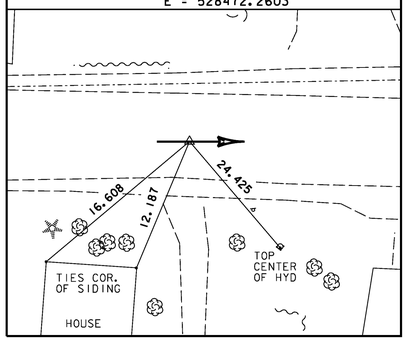

PC 19+077.333
N = 212419.2572
E = 528567.7498

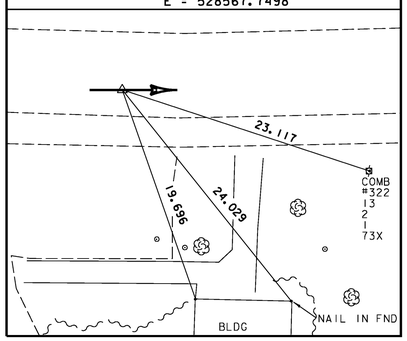

PT 19+254.154
N = 212452.9121
E = 528738.5807

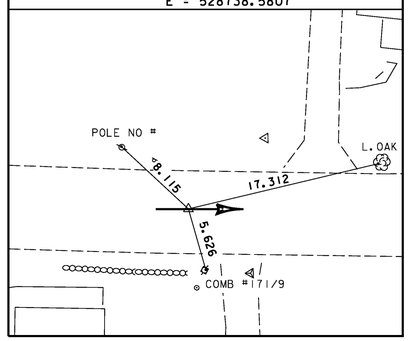

PC 19+399.465
N = 212522.3567
E = 528866.2237

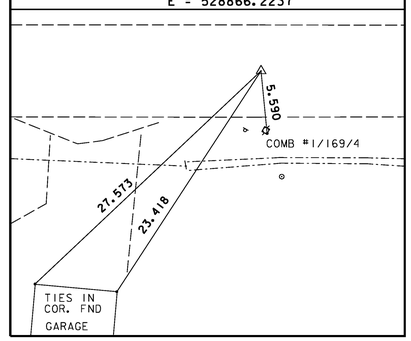

NOTE: ALIGNMENT WAS RUN ON DEC. 1, 2003 BY R.GILMAN PC, P.WINTERS, & D.BREER

ALIGNMENT TIES

PT 19+427.110
N = 212535.6643
E = 528890.4548

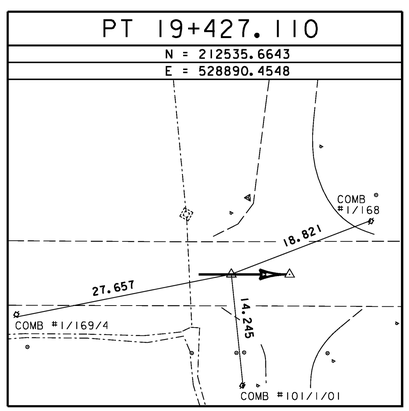

PC 19+560.561
N = 212600.3668
E = 529007.1714

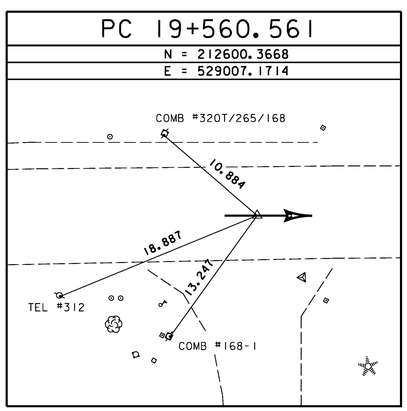

PT 19+711.533
N = 212670.6882
E = 529140.7525

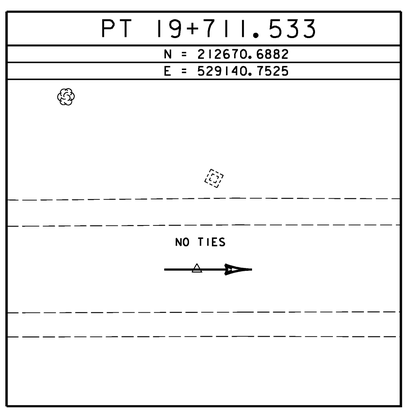

POT 19+920.000
N = 212763.7924
E = 529327.2781

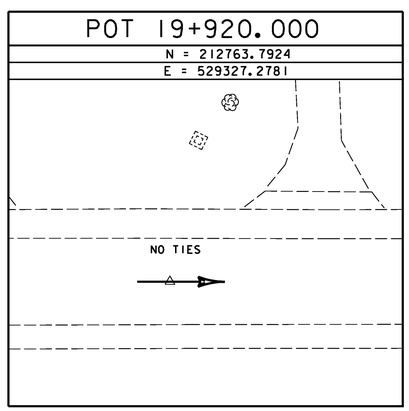

POT 20+000.000
N = 212799.5290
E = 529327.2781

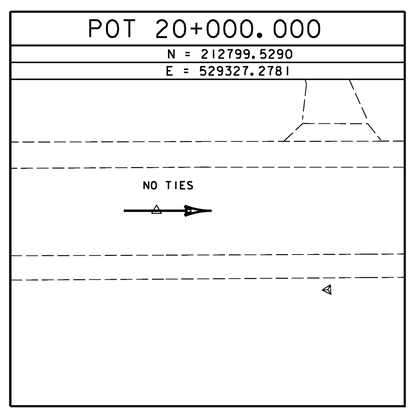

NOTE: ALIGNMENT WAS RUN ON DEC. 1, 2003 BY R.GILMAN PC, P.WINTERS, & D.BREER

PROJECT NAME:	DANVILLE
PROJECT NUMBER:	F EGC 028-3(32)
FILE NAME: ...\highway\PlotFiles\007 ties.ptf	PLOT DATE: 1/18/2011
DESIGN SUPERVISOR: VTRANS	DRAWN BY: VTRANS
DESIGNED BY: VTRANS	CHECKED BY: VTRANS
TIE SHEET TIE-2	SHEET 45 OF 306

1/18/2011 4:49:59 PM v:\1953\active\19530033_0092\highway\PlotFiles\007 ties.ptf

ALIGNMENT TIES

WH POT 1+000.000= US2 POT 18+905.941

N = 212432.2690
E = 528397.0447

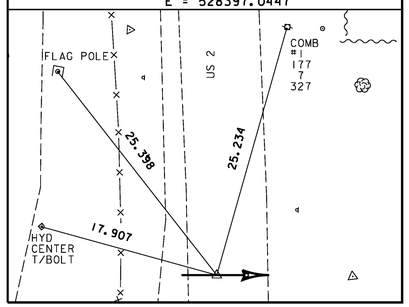

WH PC 1+013.403

N = 212445.6603
E = 528396.4854

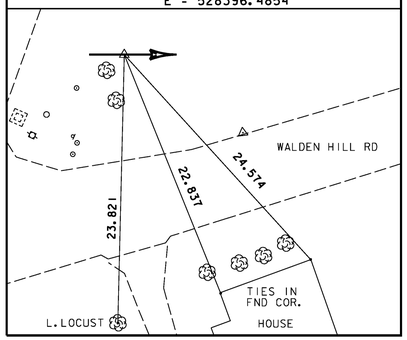

WH PT 1+057.924

N = 212485.5134
E = 528379.0337

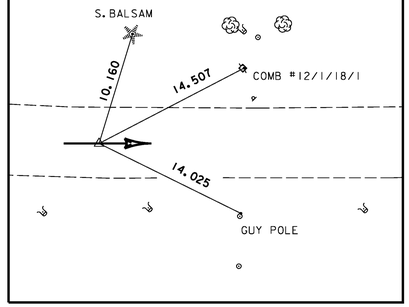

WH POT 1+100.000

N = 212515.3144
E = 528349.3304

NOTE: ALIGNMENT WAS RUN ON DEC. 1, 2003 BY R.GILMAN PC, P.WINTERS, & D.BREER

ALIGNMENT TIES

PARK POT 2+000.000 US2 POC 19+126.333

N = 212418.0308
E = 528616.6766

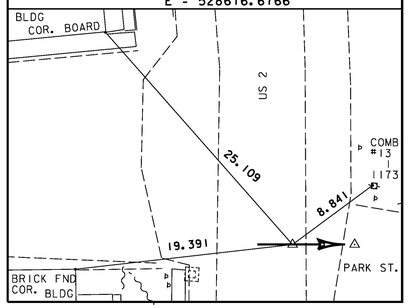

PARK PC 2+005.509

N = 212412.5344
E = 528617.0486

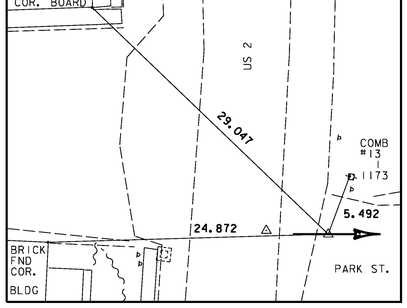

PARK PT 2+034.422

N = 212383.8645
E = 528620.6631

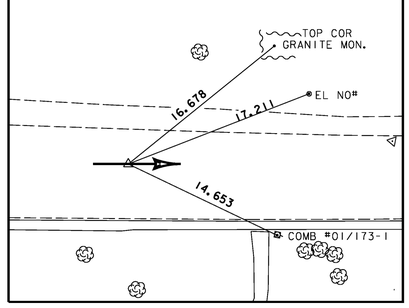

PARK PC 2+083.844

N = 212335.2698
E = 528629.6685

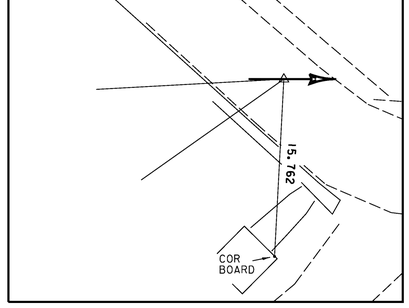

PARK PT 2+116.538

N = 212317.3854
E = 528653.4654

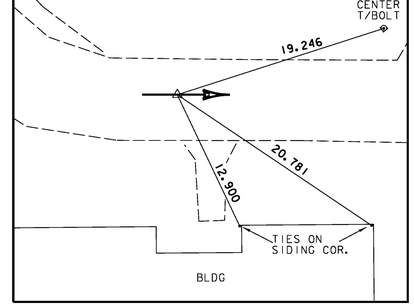

NOTE: ALIGNMENT WAS RUN ON DEC. 1, 2003 BY R.GILMAN PC, P.WINTERS, & D.BREER

ALIGNMENT TIES

PARK PC 2+169.591

N = 212322.6066
E = 528706.2598

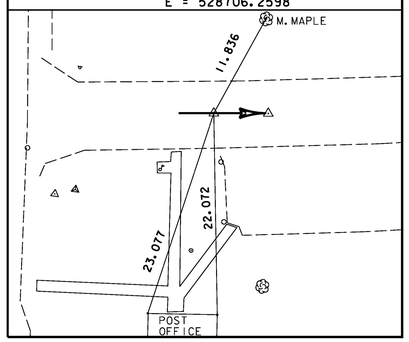

PARK PT 2+175.555

N = 212323.3702
E = 528712.1739

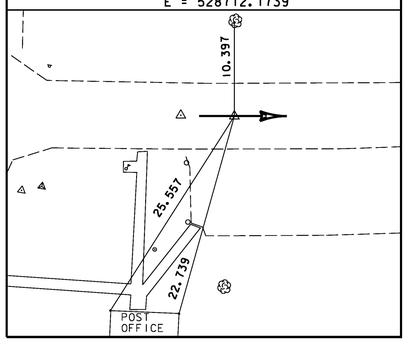

PARK PC 2+209.660

N = 212328.7437
E = 528745.8529

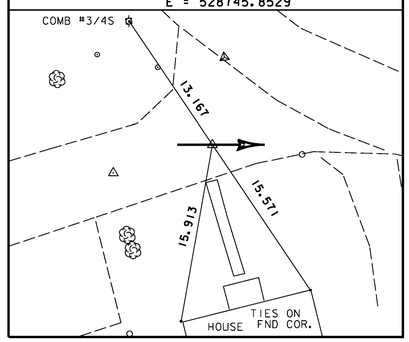

PARK PT 2+235.475

N = 212325.4779
E = 528771.1051

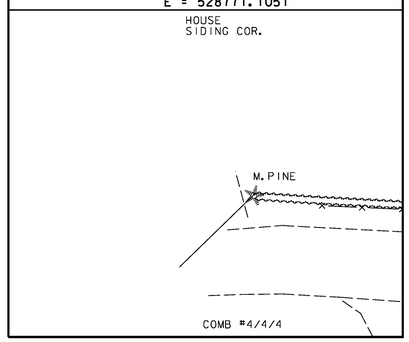

PARK POE 2+255.678

N = 212317.3239
E = 528789.5895

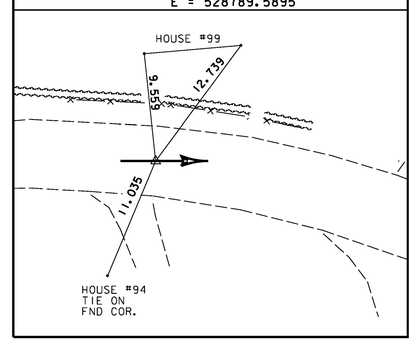

NOTE: ALIGNMENT WAS RUN ON DEC. 1, 2003 BY R.GILMAN PC, P.WINTERS, & D.BREER

PROJECT NAME: DANVILLE
PROJECT NUMBER: F EGC 028-3(32)

FILE NAME: ...\highway\PlotFiles\007 ties.ptf | PLOT DATE: 1/18/2011
DESIGN SUPERVISOR: VTRANS | DRAWN BY: VTRANS
DESIGNED BY: VTRANS | CHECKED BY: VTRANS
TIE SHEET TIE-3 | SHEET 46 OF 306

1/18/2011 1:50:00 PM v:\1953\active\95310033_1092\highway\PlotFiles\007 ties.ptf

VDOT Metric

ALIGNMENT TIES

HILL POT 3+000.000= US2 POC 19+172.499

N = 212424.3943
E = 528662.3541

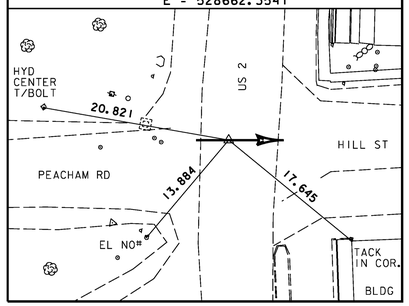

HILL POT 3+040.000

N = 212463.6927
E = 528654.8891

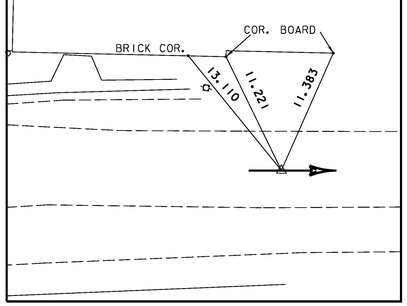

PEACHAM POT 4+000.000= US2 POC 19+175.919

N = 212425.1524
E = 528665.6879

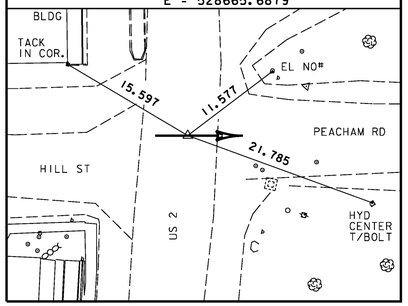

PEACHAM PC 4+033.716

N = 212392.1602
E = 528672.6367

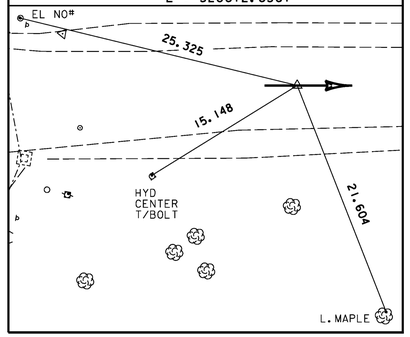

NOTE: ALIGNMENT WAS RUN ON DEC. 1, 2003 BY R.GILMAN PC, P.WINTERS, & D.BREER

ALIGNMENT TIES

PEACHAM PT 4+077.110

N = 212349.3154
E = 528679.3988

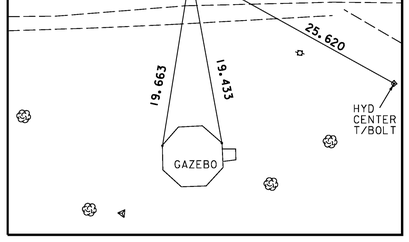

PEACHAM 4+106.334= PARK 2+145.691

N = 212320.2543
E = 528682.4757

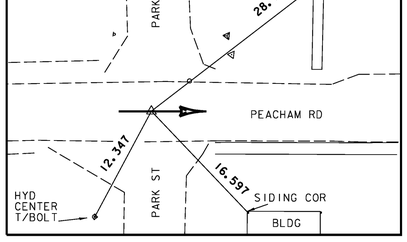

PEACHAM POT 4+140.000

N = 212286.7689
E = 528686.0187

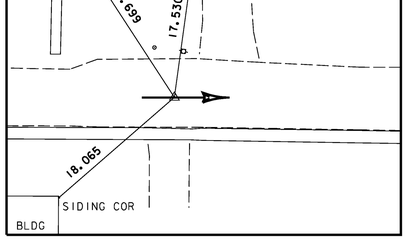

PEACHAM POT 4+161.896

N = 212264.9997
E = 528688.3258

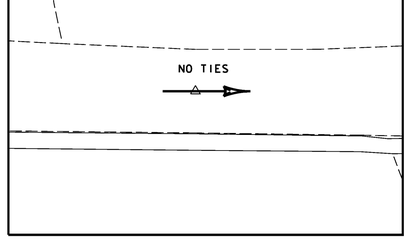

SMITH POT 5+000.000 US2 POC 19+224.651

N = 212440.1489
E = 528711.9953

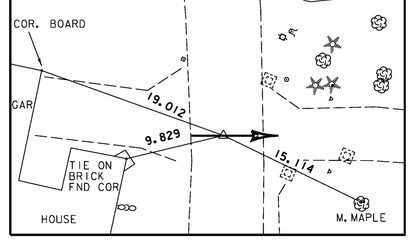

NOTE: ALIGNMENT WAS RUN ON DEC. 1, 2003 BY R.GILMAN PC, P.WINTERS, & D.BREER

ALIGNMENT TIES

SMITH PC 5+017.057

N = 212424.3630
E = 528718.4562

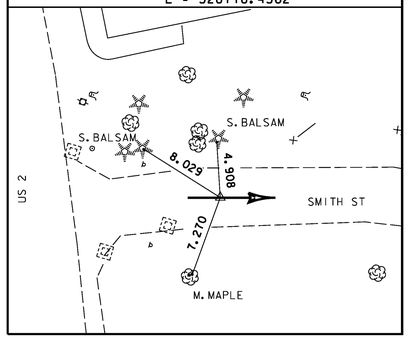

SMITH PT 5+034.837

N = 212407.2976
E = 528723.3147

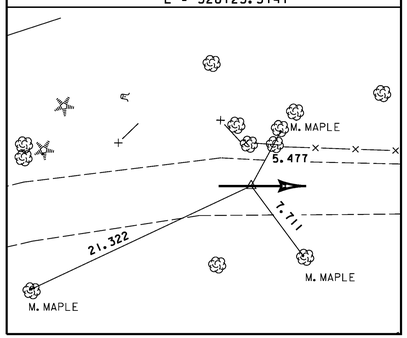

SMITH POT 5+115.963= PARK POT 2+200.430

N = 212327.2890
E = 528736.7387

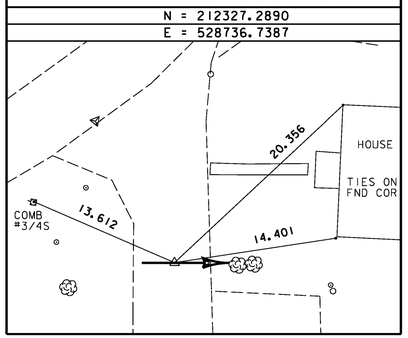

HIGHLAND 6+000.000= US2 POT 19+434.495

N = 212539.2448
E = 528896.9138

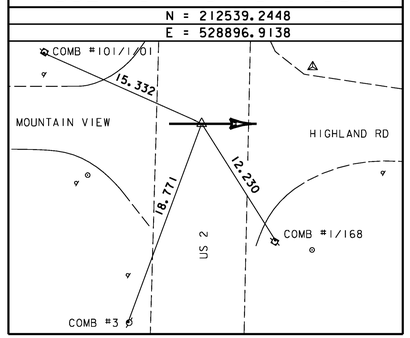

HIGHLAND PC 6+011.823

N = 212549.4396
E = 528890.9263

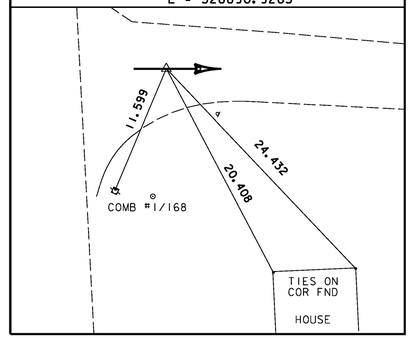

NOTE: ALIGNMENT WAS RUN ON DEC. 1, 2003 BY R.GILMAN PC, P.WINTERS, & D.BREER

PROJECT NAME: DANVILLE
PROJECT NUMBER: F EGC 028-3(32)

FILE NAME: ...\highway\PlotFiles\007 ties.ptf
PLOT DATE: 1/18/2011
DESIGN SUPERVISOR: VTRANS
DRAWN BY: VTRANS
DESIGNED BY: VTRANS
CHECKED BY: VTRANS
TIE SHEET TIE-4
SHEET 47 OF 306

1/18/2011 11:50:01 PM v:\953\active\95300033.0192\highway\PlotFiles\007 ties.ptf

ALIGNMENT TIES

HIGHLAND PT 6+022.387

N = 212558.8948
E = 528886.2345

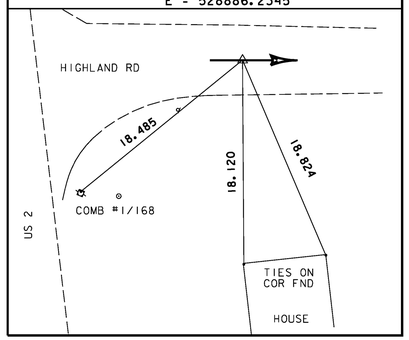

HIGHLAND POT 6+034.519

N = 212570.1149
E = 528881.6200

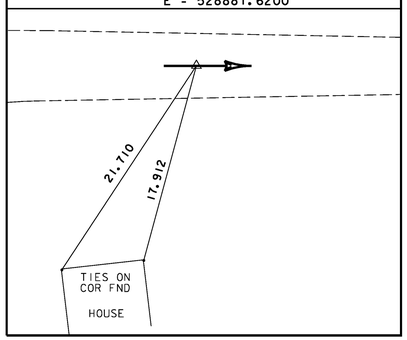

M. VIEW 6+999.932
US2 POT 19+434.495

N = 212539.2448
E = 528896.9138

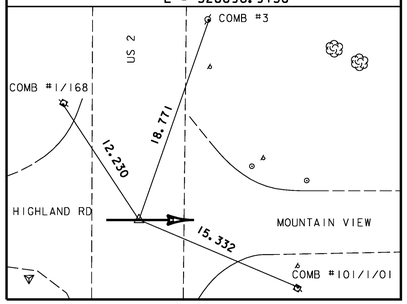

M. VIEW POT 7+035.965

N = 212507.8469
E = 528914.5928

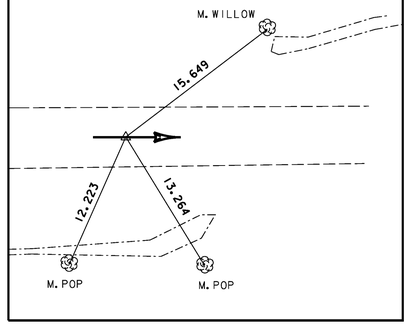

NOTE: ALIGNMENT WAS RUN ON DEC. 1, 2003 BY R.GILMAN PC, P.WINTERS, & D.BREER

ALIGNMENT TIES

ALIGNMENT TIES

1/18/2011 11:50:02 PM v:\1953\active\95300033.1092\highway\PlotFiles\007 ties.ptf

PROJECT NAME:	DANVILLE
PROJECT NUMBER:	F EGC 028-3(32)
FILE NAME: ...\highway\PlotFiles\007 ties.ptf	PLOT DATE: 1/18/2011
DESIGN SUPERVISOR: VTRANS	DRAWN BY: VTRANS
DESIGNED BY: VTRANS	CHECKED BY: VTRANS
TIE SHEET TIE-5	SHEET 48 OF 306

VAOT Metric

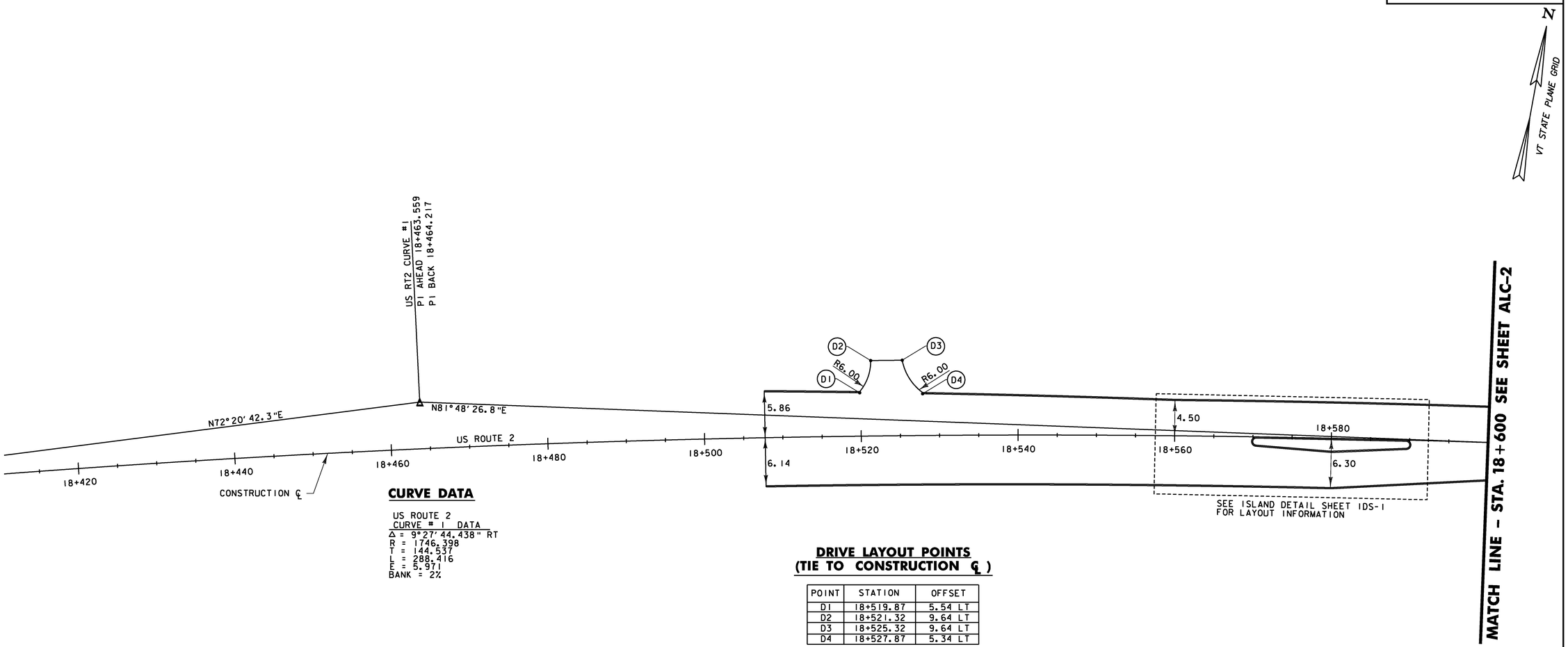

CURVE DATA

US ROUTE 2
CURVE # 1 DATA
Δ = 9°27'44.438" RT
R = 1746.398
T = 144.537
L = 288.416
E = 5.971
BANK = 2%

DRIVE LAYOUT POINTS (TIE TO CONSTRUCTION ℄)

POINT	STATION	OFFSET
D1	18+519.87	5.54 LT
D2	18+521.32	9.64 LT
D3	18+525.32	9.64 LT
D4	18+527.87	5.34 LT

STA 18+507.730 TO 18+600

DATUM
VERTICAL NAVD88
HORIZONTAL NAD83(92)

0 10 20
SCALE 1:250

Stantec

PROJECT NAME: DANVILLE
PROJECT NUMBER: F EGC 028-3(32)

FILE NAME: ...\highway\plotfiles\alc-01.ptf
DESIGN SUPERVISOR: GARY SANTY
DESIGNED BY: STANTEC
ALIGNMENT/CURBLINE PLAN ALC-1
PLOT DATE: 1/18/2011
DRAWN BY: STANTEC
CHECKED BY: STANTEC
SHEET 49 OF 306

1/8/2011 11:50:04 PM v:\1853\active\51530033.0192\highway\plotfiles\alc-01.ptf

Metric

N

VT STATE PLANE GRID

MATCH LINE – STA. 18+600 SEE SHEET ALC-1

MATCH LINE – STA. 18+770 SEE SHEET ALC-3

+603.20

4.50

4.50

N81°48' 26.8"E

18+620

18+640

18+660

18+680

US ROUTE 2

18+700

18+720

N79° 38' 40.4"E

18+740

18+760

CONSTRUCTION ℄

PC
STA 18+650.890

PT
STA 18+608.096

PT
STA 18+716.815

US RT2 CURVE #2
PI AHEAD 18+683.848
PI BACK 18+683.857

D5 D6 D7 D8 D9 D10 D11 D12 D13 D14 D15 D16

R1.50

R6.00

CURVE DATA

US ROUTE 2
CURVE # 2 DATA
Δ = 2°09' 46.348" LT
R = 1746.398
T = 32.967
L = 65.925
E = 0.311
BANK = NC

DRIVE LAYOUT POINTS (TIE TO CONSTRUCTION ℄)

POINT	STATION	OFFSET
D5	18+646.15	4.50 LT
D6	18+645.73	7.50 LT
D7	18+651.93	6.23 LT
D8	18+653.30	4.50 LT
D9	18+653.42	4.50 RT
D10	18+655.61	9.29 RT
D11	18+665.56	9.26 RT
D12	18+667.75	4.50 RT
D13	18+758.07	4.50 LT
D14	18+760.27	8.91 LT
D15	18+765.52	7.57 LT
D16	18+768.48	4.50 LT

STA 18+600 TO 18+770

DATUM
VERTICAL NAVD88
HORIZONTAL NAD83(92)

0 10 20
SCALE 1:250

Stantec

PROJECT NAME: DANVILLE
PROJECT NUMBER: F EGC 028-3(32)

FILE NAME: ...\highway\plotfiles\alc-02.ptf | PLOT DATE: 1/18/2011
DESIGN SUPERVISOR: GARY SANTY | DRAWN BY: STANTEC
DESIGNED BY: STANTEC | CHECKED BY: STANTEC
ALIGNMENT/CURBLINE PLAN ALC-2 | SHEET 50 OF 306

1/18/2011 11:50:05 PM v:\9531\active\95310033.0192\highway\plotfiles\alc-02.ptf

VAOT Metric

SIDEWALK LAYOUT POINTS (TIE TO CONSTRUCTION ℄)

POINT	STATION	OFFSET
S1	18+809.04	6.18 RT
S2	18+799.85	14.54 RT
S3	18+925.98	8.26 RT
S4	18+924.64	14.14 RT

DRIVE LAYOUT POINTS (TIE TO CONSTRUCTION ℄)

POINT	STATION	OFFSET
D17	18+786.54	4.50 LT
D18	18+788.73	8.78 LT
D19	18+792.34	9.82 LT
D20	18+794.52	4.50 LT
D21	18+822.25	4.50 LT
D22	18+524.17	6.08 LT
D23	18+833.27	6.01 LT
D24	18+835.27	4.50 LT
D25	1+041.89	3.30 RT
D26	1+040.04	5.52 RT
D27	1+031.67	4.38 RT
D28	1+030.04	3.30 RT

CURVE DATA

US ROUTE 2 CURVE # 3 DATA
Δ = 16°36'50.9'' RT
R = 498.964
T = 72.854
L = 144.685
E = 5.291
BANK = NC

WALDEN HILL CURVE DATA
Δ = 42°30'51.6'' RT
R = 60.000
T = 23.341
L = 44.521
E = 4.380
BANK = NC

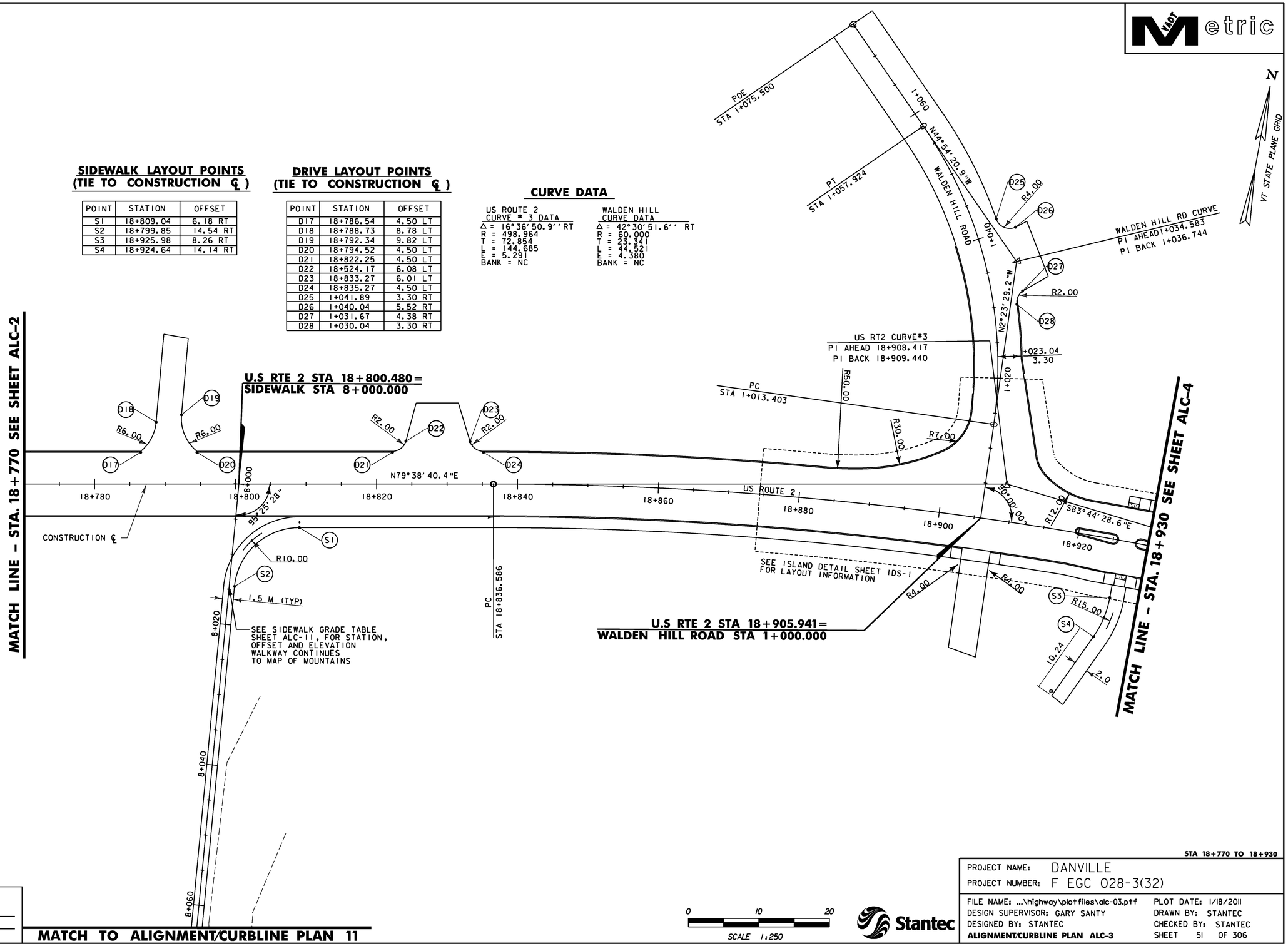

DATUM

VERTICAL	NAVD88
HORIZONTAL	NAD83(92)

MATCH TO ALIGNMENT/CURBLINE PLAN 11

0 10 20
SCALE 1:250

Stantec

STA 18+770 TO 18+930

PROJECT NAME:	DANVILLE
PROJECT NUMBER:	F EGC 028-3(32)
FILE NAME: ...\highway\plotfiles\alc-03.ptf	PLOT DATE: 1/18/2011
DESIGN SUPERVISOR: GARY SANTY	DRAWN BY: STANTEC
DESIGNED BY: STANTEC	CHECKED BY: STANTEC
ALIGNMENT/CURBLINE PLAN ALC-3	SHEET 51 OF 306

1/18/2011 15:06:06 PM v:\1953\active\19530033.1092\highway\plotfiles\alc-03.ptf

VAOT Metric

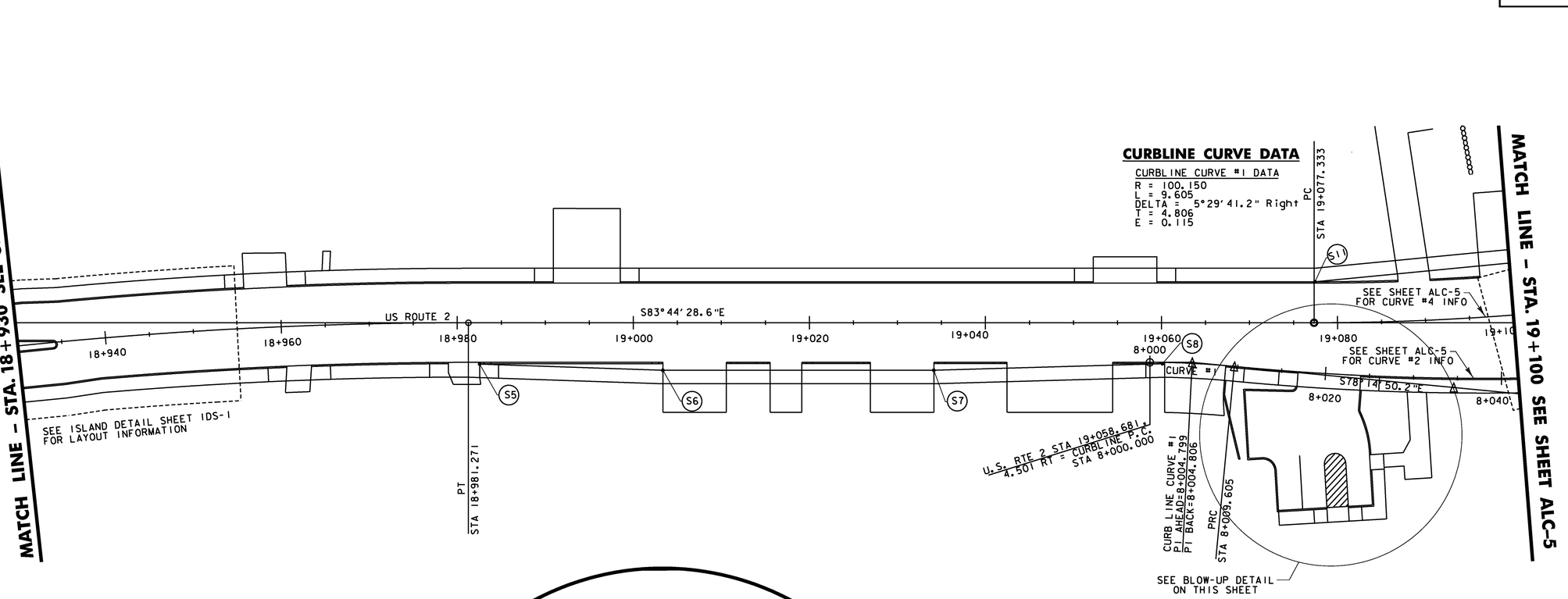

CURBLINE CURVE DATA

CURBLINE CURVE #1 DATA
R = 100.150
L = 9.605
DELTA = 5°29'41.2" Right
T = 4.806
E = 0.115

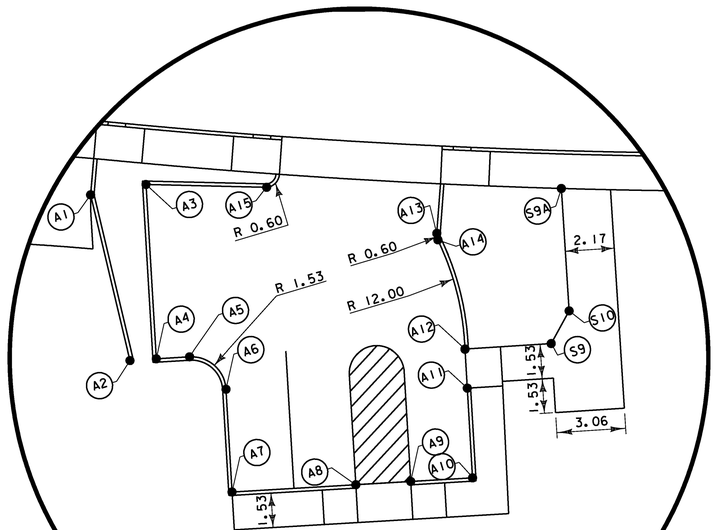

BLOW-UP DETAIL

0 5 10
SCALE 1:125

0 10 20
SCALE 1:250

CURBLINE LAYOUT POINTS TIE TO CONSTRUCTION ℄

POINT	STATION	OFFSET
A1	19+067.02	8.16 RT
A2	19+068.77	15.50 RT
A3	19+069.48	7.70 RT
A4	19+069.94	15.42 RT
A5	19+071.41	15.33 RT
A6	19+073.03	16.77 RT
A7	19+073.30	21.33 RT
A8	19+078.69	21.01 RT
A9	19+080.96	20.89 RT
A10	19+083.53	20.77 RT
A11	19+083.39	16.79 RT
A12	19+083.33	15.06 RT
A13	19+082.22	9.91 RT
A14	19+082.26	10.20 RT
A15	19+074.83	7.82 RT

SIDEWALK LAYOUT POINTS (TIE TO CONSTRUCTION ℄)

POINT	STATION	OFFSET	COMMENTS
S5	18+982.55	4.70 RT	BEGIN SIDEWALK TAPER
S6	19+003.37	5.40 RT	END SIDEWALK TAPER
S7	19+034.14	5.40 RT	BEGIN SIDEWALK TAPER
S8	19+060.11	4.66 RT	END SIDEWALK TAPER
S9	19+086.97	14.92 RT	
S9A	19+087.63	8.06 RT	
S10	19+087.77	13.50 RT	
S11	19+077.44	4.66 LT	

DATUM
VERTICAL NAVD88
HORIZONTAL NAD83(92)

STA 18+930 TO 19+100

PROJECT NAME: DANVILLE
PROJECT NUMBER: F EGC 028-3(32)

FILE NAME: ...\highway\plotfiles\alc-04.ptf
DESIGN SUPERVISOR: GARY SANTY
DESIGNED BY: STANTEC
ALIGNMENT/CURBLINE PLAN ALC-4
PLOT DATE: 1/18/2011
DRAWN BY: STANTEC
CHECKED BY: STANTEC
SHEET 52 OF 306

Stantec

1/18/2011 15:06:08 PM v:\0953\active\95300033_0192\highway\plotfiles\alc-04.ptf

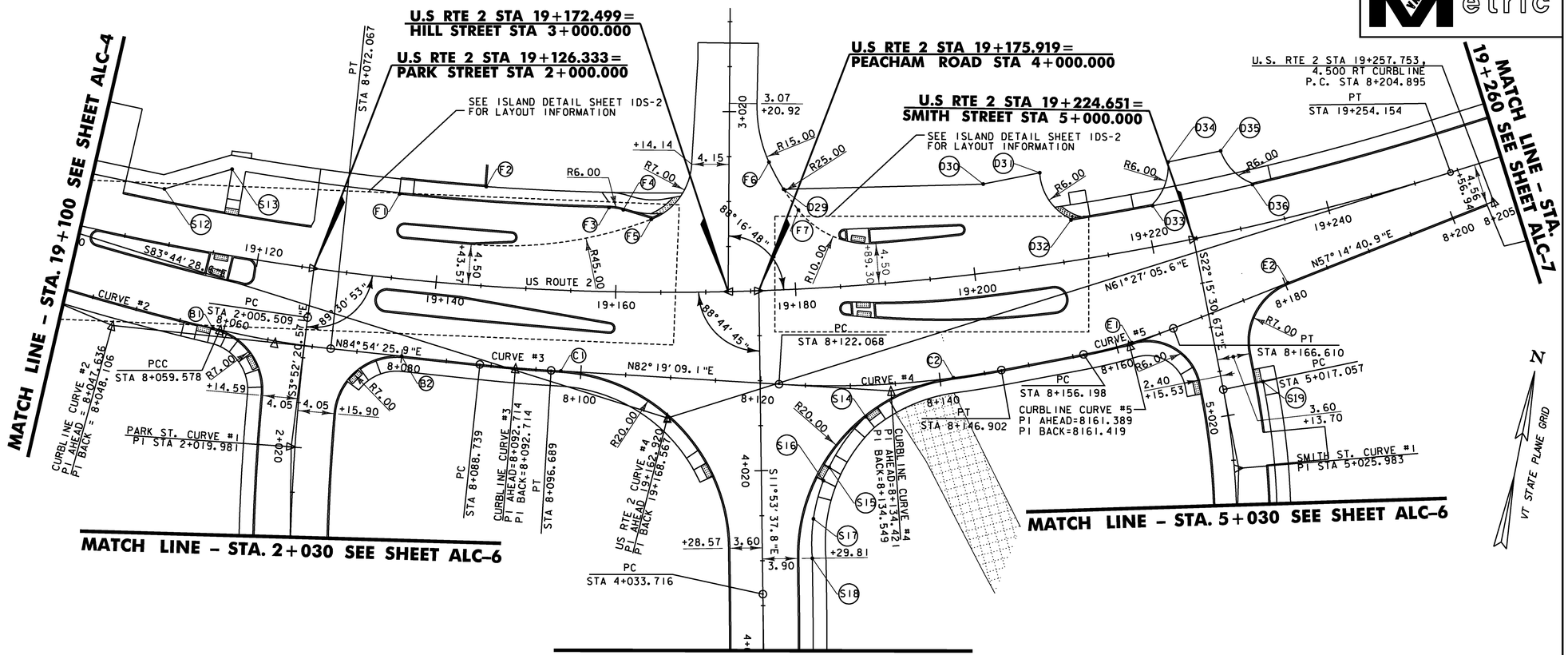

CURVE DATA

US ROUTE 2
CURVE # 4 DATA
Δ = 34°48′25.8" LT
R = 291.063
T = 91.234
L = 176.821
E = 13.964
BANK = NC

SMITH ST.
CURVE #1 DATA
Δ = 12°44′02.5" RT
R = 80.000
T = 8.927
L = 17.780
E = 0.497

PARK ST.
CURVE # 1 DATA
Δ = 06°37′35.1" LT
R = 250.000
T = 14.473
L = 28.913
E = 0.419

CURBLINE CURVE DATA

CURBLINE CURVE #2 DATA
R = 295.500 (1) R = 100.000 (2)
L = 49.973 (1) L = 12.490 (2)
DELTA = 16°50′43.9" Left
T = 38.501 (1) T = 24.431 (2)
E = 2.498

CURBLINE CURVE #3 DATA
R = 175.965
L = 7.950
DELTA = 2°35′18.4" Left
T = 3.975
E = 0.045

CURBLINE CURVE #4 DATA
R = 100.000
L = 24.834
DELTA = 14°13′44.0" Left
T = 12.481
E = 0.776

CURBLINE CURVE #5 DATA
R = 55.000
L = 10.412
DELTA = 10°50′46.4" Left
T = 5.221
E = 0.247

SIDEWALK LAYOUT POINTS (TIE TO CONSTRUCTION ℄)

POINT	STATION	OFFSET
S12	19+108.29	5.96 LT
S13	19+115.47	9.50 LT
S14	4+014.14	11.71 LT
S15	4+019.72	7.55 LT
S16	4+021.19	6.89 LT
S17	4+025.43	5.73 LT
S18	4+029.81	5.55 LT
S19	5+017.06	4.50 LT

CURBLINE LAYOUT POINTS (TIE TO CONSTRUCTION ℄)

POINT	STATION	OFFSET
B1	19+116.38	8.27 RT
B2	19+137.01	8.55 RT
C1	19+154.25	8.97 RT
C2	19+196.42	11.17 RT
E1	19+215.89	10.04 RT
E2	19+233.70	7.04 RT
F1	19+134.90	9.35 LT
F2	19+144.81	11.03 LT
F3	19+159.04	9.35 LT
F4	19+160.67	9.13 LT
F5	19+163.90	8.11 LT
F6	19+177.62	14.23 LT
F7	19+180.76	8.77 LT

DRIVE LAYOUT POINTS (TIE TO CONSTRUCTION ℄)

POINT	STATION	OFFSET
D29	19+179.18	11.16 LT
D30	19+202.17	9.83 LT
D31	19+208.80	10.22 LT
D32	19+211.50	4.50 LT
D33	19+220.86	4.50 LT
D34	19+223.54	8.93 LT
D35	19+229.70	8.94 LT
D36	19+232.39	4.50 LT

DATUM
VERTICAL NAVD88
HORIZONTAL NAD83(92)

0 10 20
SCALE 1:250

STA 19+100 TO 19+260

PROJECT NAME: DANVILLE
PROJECT NUMBER: F EGC 028-3(32)
FILE NAME: ...\highway\plotfiles\alc-05.ptf
DESIGN SUPERVISOR: GARY SANTY
DESIGNED BY: STANTEC
ALIGNMENT/CURBLINE PLAN ALC-5
PLOT DATE: 1/18/2011
DRAWN BY: STANTEC
CHECKED BY: STANTEC
SHEET 53 OF 306

1/18/2011 11:50:09 PM v:\1953\active\19530033.0192\highway\plotfiles\alc-05.ptf

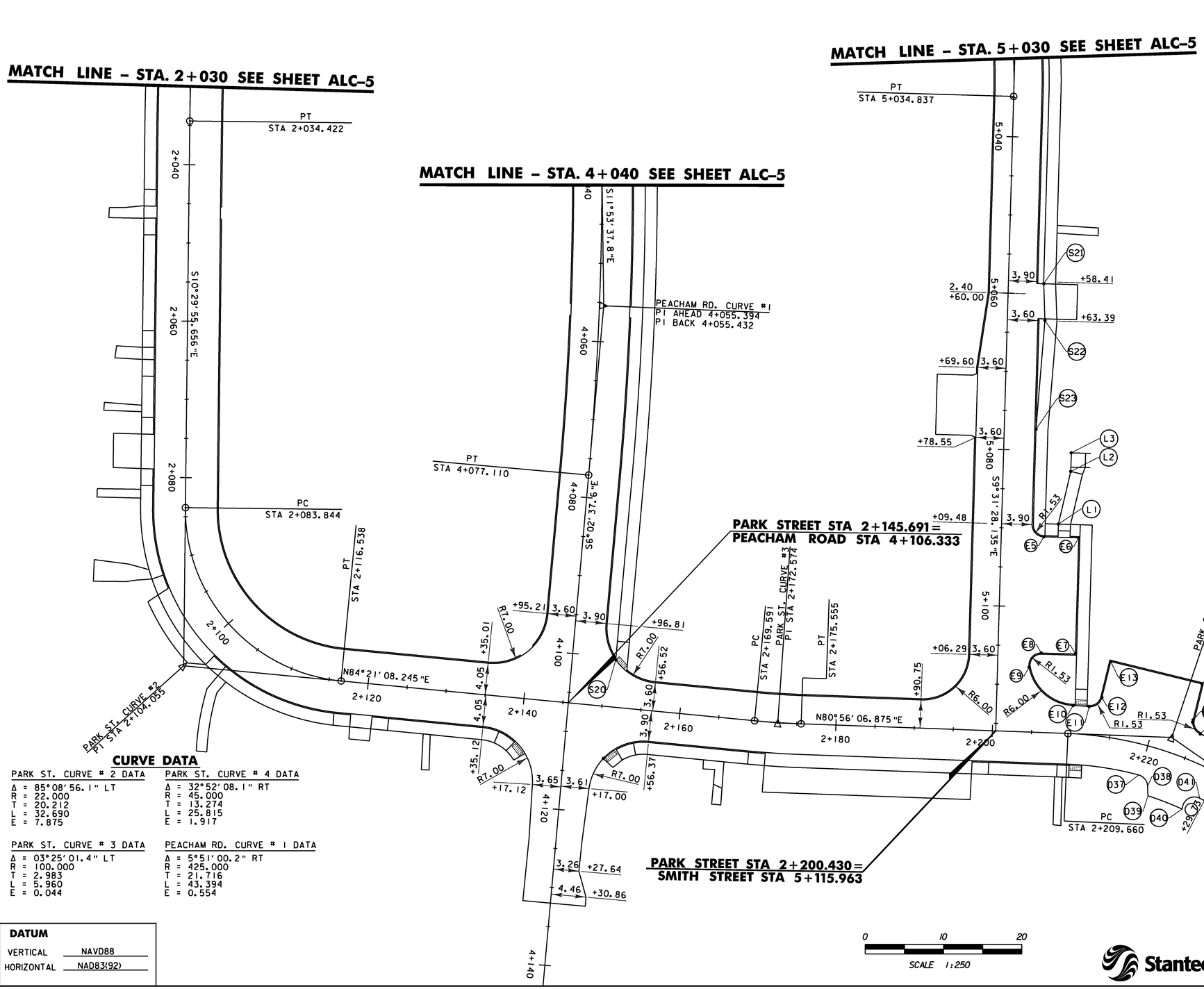

CURBLINE LAYOUT POINTS (TIE TO CONSTRUCTION ℄)

POINT	STATION	OFFSET
E5	5+091.00	5.43 LT
E6	5+091.00	9.90 LT
E7	5+105.85	9.90 LT
E8	5+102.85	5.43 LT
E9	5+107.70	4.03 LT
E10	2+210.14	3.60 LT
E11	2+212.05	3.60 LT
E12	2+213.42	4.92 LT
E13	2+213.89	9.63 LT
E14	2+223.79	9.63 LT
E15	2+224.29	4.62 LT
E16	2+225.62	3.60 LT

DRIVE LAYOUT POINTS (TIE TO CONSTRUCTION ℄)

POINT	STATION	OFFSET
D37	2+219.85	3.90 RT
D38	2+221.50	4.96 RT
D39	2+221.97	6.13 RT
D40	2+227.41	6.13 RT
D41	2+229.00	3.90 RT

SIDEWALK LAYOUT POINTS (TIE TO CONSTRUCTION ℄)

POINT	STATION	OFFSET
S20	4+100.32	5.55 LT
S21	5+058.66	4.52 LT
S22	5+063.34	4.80 LT
S23	5+077.28	4.05 LT
L1	5+089.30	7.26 LT
L2	5+082.60	8.65 LT
L3	5+080.20	8.65 LT

CURVE DATA

PARK ST. CURVE # 2 DATA
Δ = 85°08'56.1" LT
R = 22.000
T = 20.212
L = 32.690
E = 7.875

PARK ST. CURVE # 4 DATA
Δ = 32°52'08.1" RT
R = 45.000
T = 13.274
L = 25.815
E = 1.917

PARK ST. CURVE # 3 DATA
Δ = 03°25'01.4" LT
R = 100.000
T = 2.983
L = 5.960
E = 0.044

PEACHAM RD. CURVE # 1 DATA
Δ = 5°51'00.2" RT
R = 425.000
T = 21.716
L = 43.394
E = 0.554

DATUM
VERTICAL NAVD88
HORIZONTAL NAD83(92)

0 10 20
SCALE 1:250

Stantec

PROJECT NAME: DANVILLE
PROJECT NUMBER: F EGC 028-3(32)

FILE NAME: ...\highway\plotfiles\alc-06.ptf
DESIGN SUPERVISOR: GARY SANTY
DESIGNED BY: STANTEC
ALIGNMENT/CURBLINE PLAN ALC-6

PLOT DATE: 1/18/2011
DRAWN BY: STANTEC
CHECKED BY: STANTEC
SHEET 54 OF 306

1/18/2011 1:50:12 PM v:\1953\active\195310033_1092\highway\plotfiles\alc-06.ptf

VTrans Metric

DRIVE LAYOUT POINTS
(TIE TO CONSTRUCTION ℄)

POINT	STATION	OFFSET
D42	19+262.14	4.50 LT
D43	19+264.56	8.59 LT
D44	19+267.56	9.86 LT
D45	19+270.12	4.50 LT
D46	19+332.02	4.50 RT
D47	19+334.98	8.78 RT
D48	19+338.61	9.71 RT
D49	19+340.96	4.50 RT
D50	19+343.21	4.50 LT
D51	19+345.58	9.09 LT
D52	19+349.89	10.0 LT
D53	19+352.18	4.50 LT
D54	19+354.92	4.50 LT
D55	19+357.26	9.40 LT
D56	19+361.38	9.37 LT
D57	19+363.68	4.50 LT
D58	19+378.95	4.50 RT
D59	19+381.22	9.35 RT
D60	19+388.41	9.29 RT
D61	19+390.63	4.50 RT

CURVE DATA

US ROUTE 2
CURVE #5 DATA
Δ = 0°27' 12.588" LT
R = 3492.752
T = 13.823
L = 27.645
E = 0.027
BANK = NC

HIGHLAND AVE
CURVE #1 DATA
R = 75.000
L = 10.564
Δ = 8°04' 13.1" RT
T = 5.291
E = 0.186

HIGHLAND AVE CURVE #1
PI AHEAD STA 6+017.096
PI BACK STA 6+017.114

US. RTE 2 STA 19+434.495 =
HIGHLAND AVE STA 6+000.000

US. RTE 2 STA 19+434.495 =
MOUNTAIN VIEW DRIVE STA 6+999.932

US RT2 CURVE #5
PI AHEAD 19+413.287
PI BACK 19+413.288

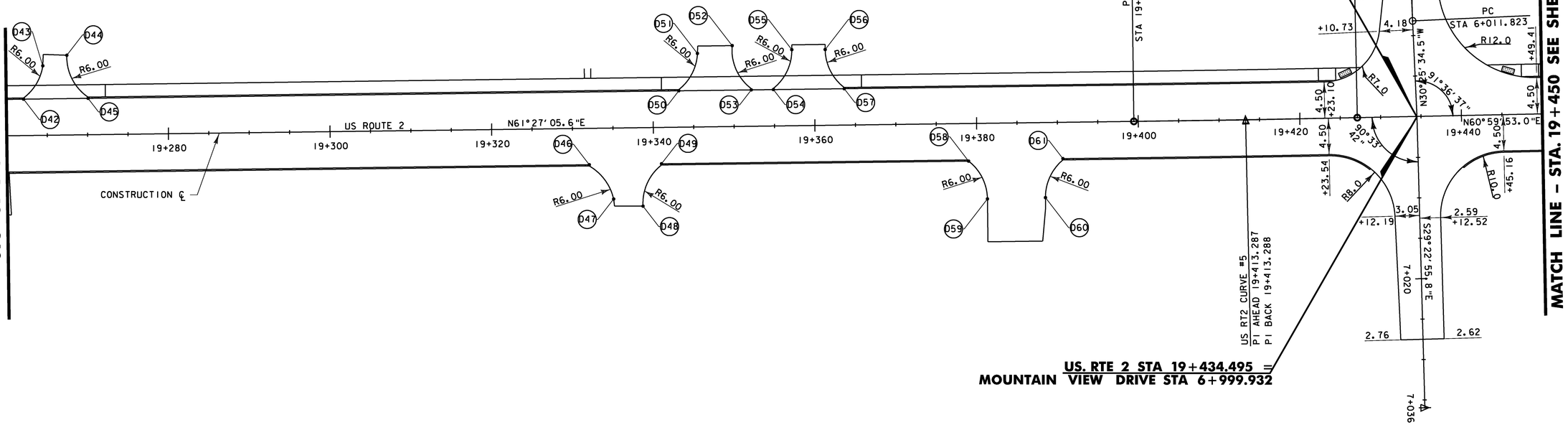

STA 19+260 TO 19+450

DATUM
VERTICAL NAVD88
HORIZONTAL NAD83(92)

0 10 20
SCALE 1:250

Stantec

PROJECT NAME: DANVILLE	
PROJECT NUMBER: F EGC 028-3(32)	
FILE NAME: ...\highway\plotfiles\alc-07.ptf	PLOT DATE: 1/18/2011
DESIGN SUPERVISOR: GARY SANTY	DRAWN BY: STANTEC
DESIGNED BY: STANTEC	CHECKED BY: STANTEC
ALIGNMENT/CURBLINE PLAN ALC-7	SHEET 55 OF 306

1/18/2011 1:50:03 PM v:\953\active\95300033.0192\highway\plotfiles\alc-07.ptf

Metric

DRIVE LAYOUT POINTS
(TIE TO CONSTRUCTION ℄)

POINT	STATION	OFFSET
D62	19+462.93	4.50 LT
D63	19+465.14	9.30 LT
D64	19+470.99	9.30 LT
D65	19+473.20	4.50 LT
D66	19+475.61	4.50 LT
D67	19+477.82	9.18 LT
D68	19+490.01	9.18 LT
D69	19+491.95	4.50 LT
D70	19+485.22	4.50 RT
D71	19+487.39	8.60 RT
D72	19+491.36	9.53 RT
D73	19+493.56	4.50 RT
D74	19+522.67	4.50 RT
D75	19+524.88	9.35 RT
D76	19+532.08	9.25 RT
D77	19+534.29	4.50 RT
D78	19+554.18	4.50 LT
D79	19+556.19	7.76 LT
D80	19+568.36	7.70 LT
D81	19+570.15	4.50 LT
D82	19+554.88	4.50 RT
D83	19+557.09	9.30 RT
D84	19+564.31	9.03 RT
D85	19+566.80	4.50 RT

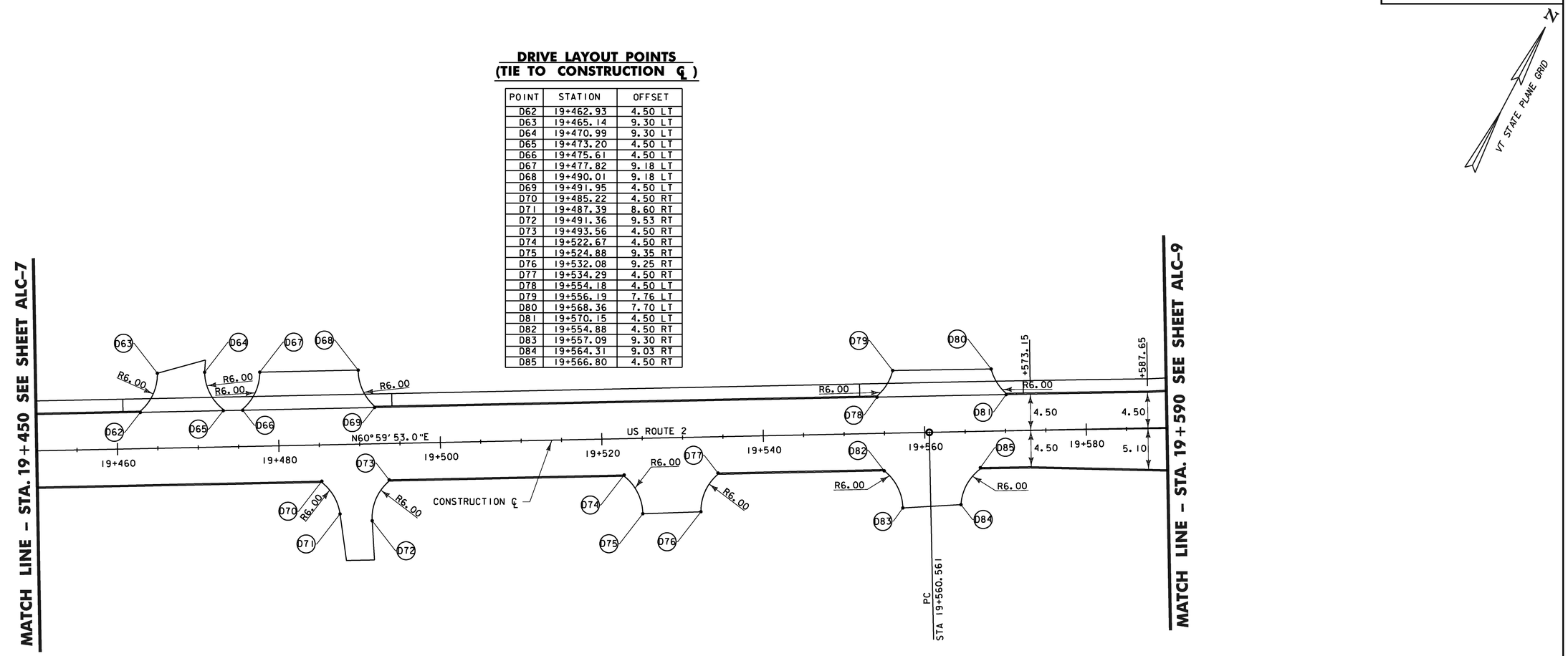

STA 19+450 TO 19+590

DATUM

VERTICAL	NAVD88
HORIZONTAL	NAD83(92)

0 10 20
SCALE 1:250

Stantec

PROJECT NAME: DANVILLE
PROJECT NUMBER: F EGC 028-3(32)

FILE NAME: ...\highway\plotfiles\alc-08.ptf
DESIGN SUPERVISOR: GARY SANTY
DESIGNED BY: STANTEC
ALIGNMENT/CURBLINE PLAN ALC-8

PLOT DATE: 1/18/2011
DRAWN BY: STANTEC
CHECKED BY: STANTEC
SHEET 56 OF 306

1/18/2011 1:50:14 PM v:\1953\active\195310033_10192\highway\plotfiles\alc-08.ptf

VAOT Metric

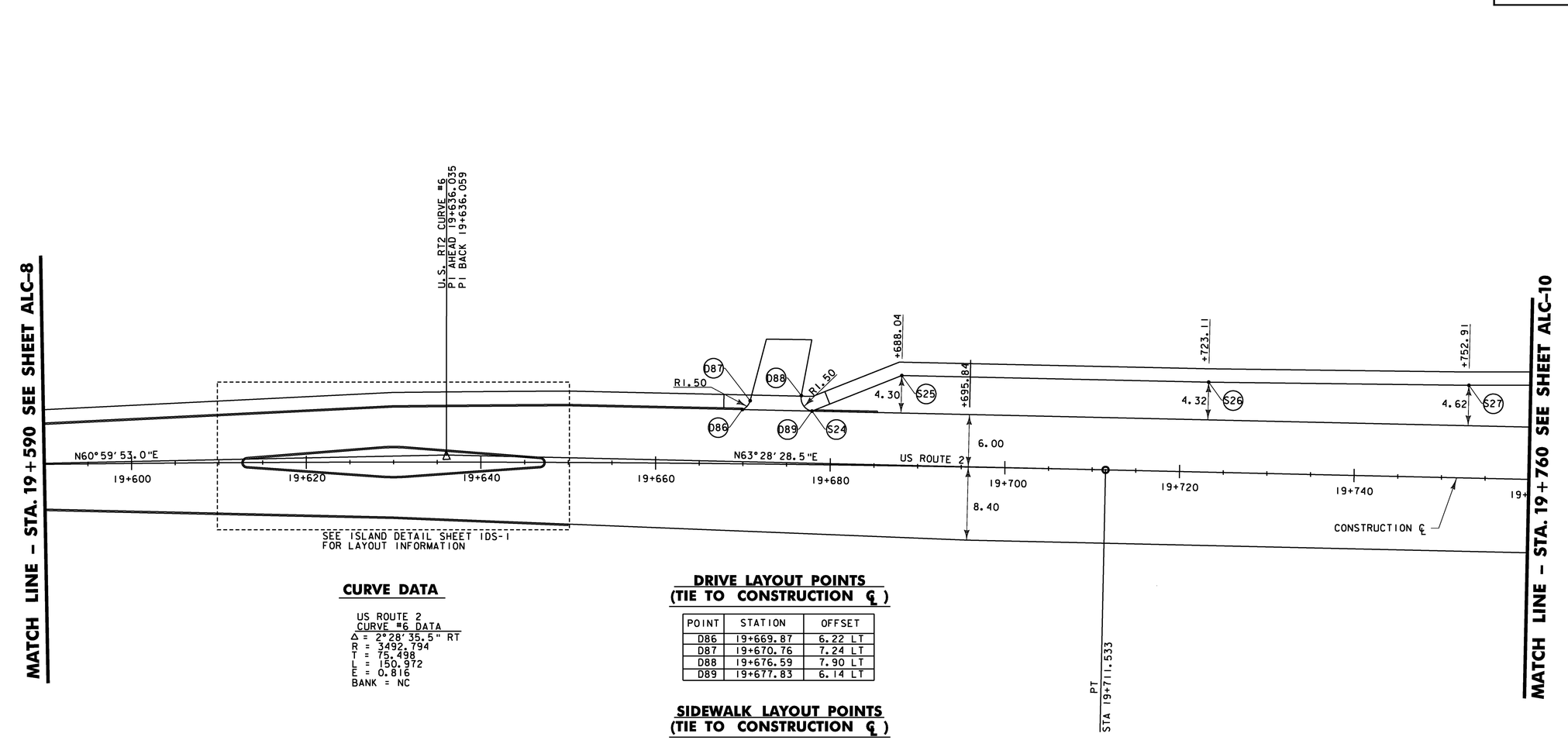

CURVE DATA

US ROUTE 2
CURVE #6 DATA
Δ = 2°28' 35.5" RT
R = 3492.794
T = 75.498
L = 150.972
E = 0.816
BANK = NC

DRIVE LAYOUT POINTS (TIE TO CONSTRUCTION ℄)

POINT	STATION	OFFSET
D86	19+669.87	6.22 LT
D87	19+670.76	7.24 LT
D88	19+676.59	7.90 LT
D89	19+677.83	6.14 LT

SIDEWALK LAYOUT POINTS (TIE TO CONSTRUCTION ℄)

POINT	STATION	OFFSET
S24	19+677.83	6.14 LT
S25	19+688.03	10.36 LT
S26	19+723.11	10.31 LT
S27	19+752.91	10.62 LT

DATUM
VERTICAL NAVD88
HORIZONTAL NAD83(92)

0 10 20
SCALE 1:250

Stantec

STA 19+590 TO 19+760

PROJECT NAME: DANVILLE
PROJECT NUMBER: F EGC 028-3(32)

FILE NAME: ...\highway\plotfiles\alc-09.ptf
DESIGN SUPERVISOR: GARY SANTY
DESIGNED BY: STANTEC
ALIGNMENT/CURBLINE PLAN ALC-9
PLOT DATE: 1/18/2011
DRAWN BY: STANTEC
CHECKED BY: STANTEC
SHEET 57 OF 306

1/18/2011 1:50:46 PM v:\1953\active\953100033_0092\highway\plotfiles\alc-09.ptf

Metric

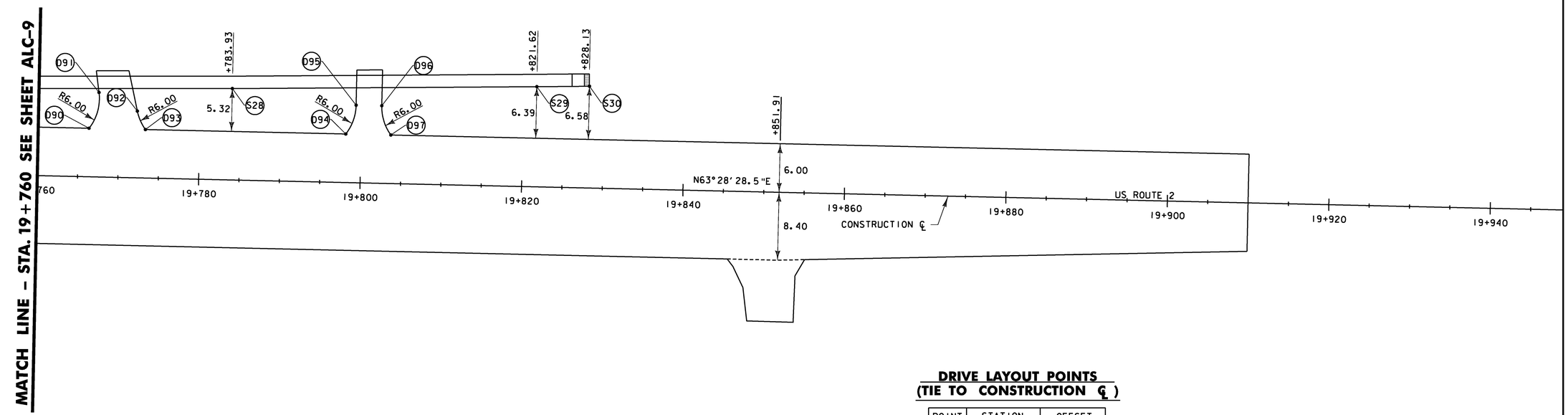

DRIVE LAYOUT POINTS (TIE TO CONSTRUCTION ℄)

POINT	STATION	OFFSET
D90	19+766.29	6.00 LT
D91	19+767.43	10.46 LT
D92	19+772.23	8.26 LT
D93	19+773.28	6.00 LT
D94	19+798.10	6.01 LT
D95	19+799.30	9.61 LT
D96	19+802.47	9.61 LT
D97	19+803.67	6.01 LT

SIDEWALK LAYOUT POINTS (TIE TO CONSTRUCTION ℄)

POINT	STATION	OFFSET
S28	19+783.93	11.32
S29	19+821.62	12.41
S30	19+828.13	12.60

DATUM

VERTICAL NAVD88

HORIZONTAL NAD83(92)

0 10 20

SCALE 1:250

Stantec

STA 19+760 TO 19+910

PROJECT NAME: DANVILLE

PROJECT NUMBER: F EGC 028-3(32)

FILE NAME: ...\highway\plotfiles\alc-10.ptf | PLOT DATE: 1/18/2011

DESIGN SUPERVISOR: GARY SANTY | DRAWN BY: STANTEC

DESIGNED BY: STANTEC | CHECKED BY: STANTEC

ALIGNMENT/CURBLINE PLAN ALC-10 | SHEET 58 OF 306

1/18/2011 11:50:17 PM v:\1953\active\19530033.0192\highway\plotfiles\alc-10.ptf

MATCH TO ALIGNMENT/CURBLINE PLAN 3

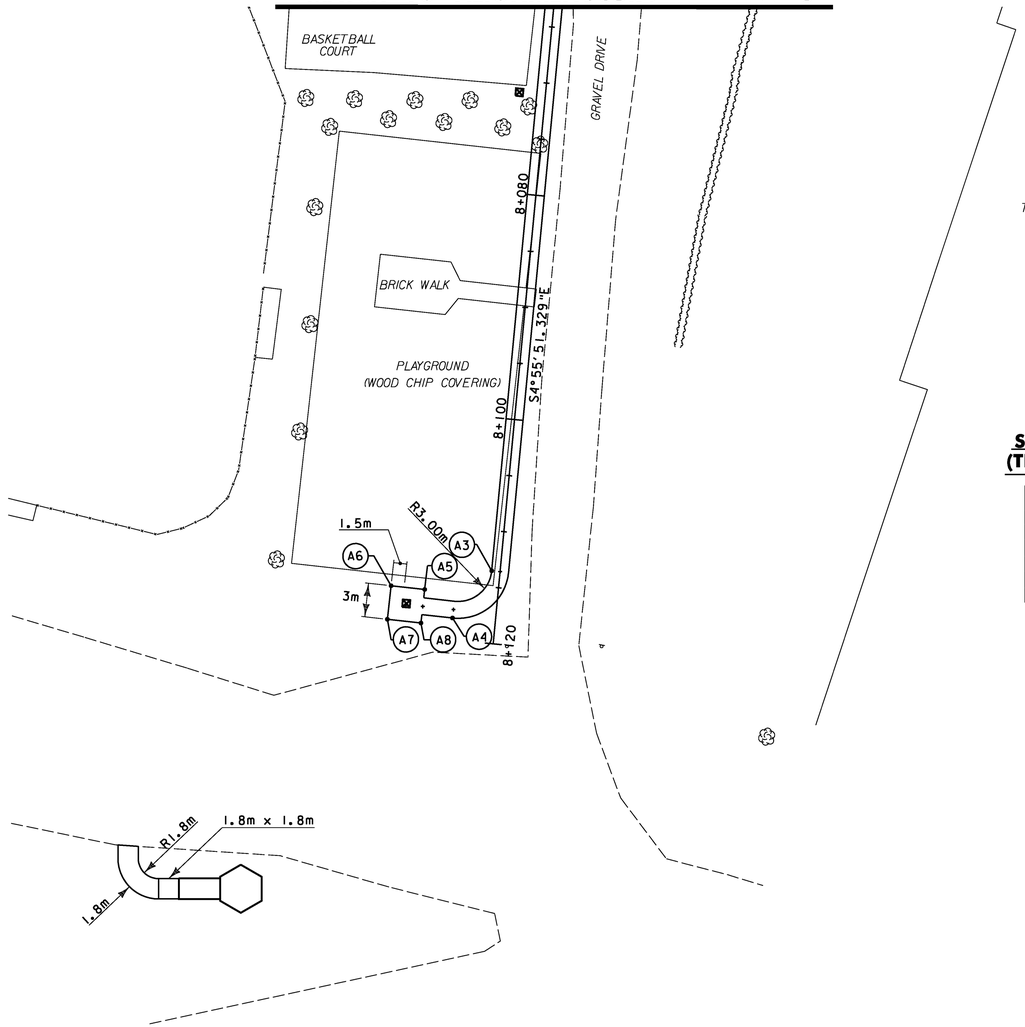

SIDEWALK GRADE

STATION	OFFSET	ELEV.
18+809.0	5.4 RT	449.30
18+802.3	8.0 RT	449.23
8+015.0	℄	448.62
8+035.0	℄	447.76
8+055.0	℄	447.54
8+075.0	℄	447.51
8+095.0	℄	447.14
8+113.5	℄	446.85
8+117.5	℄	446.97
8+117.5	℄	447.05
8+177.5	℄	447.13

SIDEWALK LAYOUT POINTS (TIE TO CONSTRUCTION ℄)

POINT	STATION	OFFSET
A3	8+113.56	0.75 RT
A4	8+118.06	3.82 RT
A5	8+115.77	6.52 RT
A6	8+115.72	9.52 RT
A7	8+118.72	9.56 RT
A8	8+118.77	6.56 RT

PROJECT NAME: DANVILLE
PROJECT NUMBER: F EGC 028-3(32)

FILE NAME: ...\highway\PlotFiles\alc-11.ptf
DESIGN SUPERVISOR: GARY SANTY
DESIGNED BY: STANTEC
ALIGNMENT/CURBLINE PLAN ALC-11

PLOT DATE: 1/18/2011
DRAWN BY: STANTEC
CHECKED BY: STANTEC
SHEET 59 OF 306

1/18/2011 11:50:08 PM v:\1953\active\195300033_1092\highway\PlotFiles\alc-11.ptf

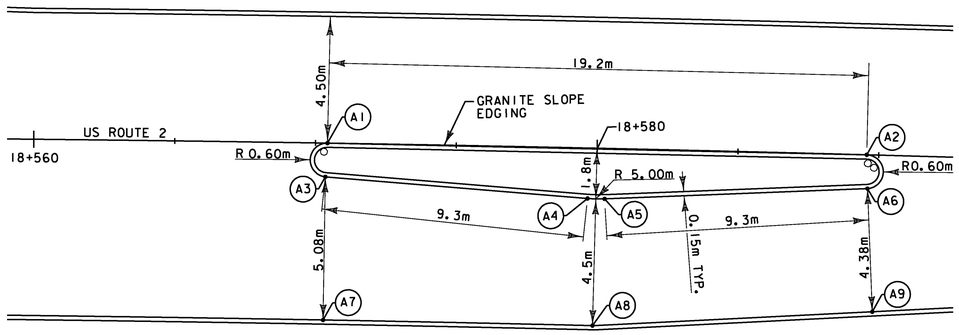

DESC.	STA	OFFSET
A1	18+570.43	0
A2	18+589.58	0
A3	18+570.37	1.20 RT
A4	18+579.70	1.79 RT
A5	18+580.30	1.79 RT
A6	18+589.63	1.20 RT
A7	18+570.37	6.30 RT
A8	18+579.97	6.30 RT
A9	18+589.92	5.57 RT

GRANITE SLOPE EDGING ISLAND DETAIL AT WEST GATEWAY

SCALE 1:100

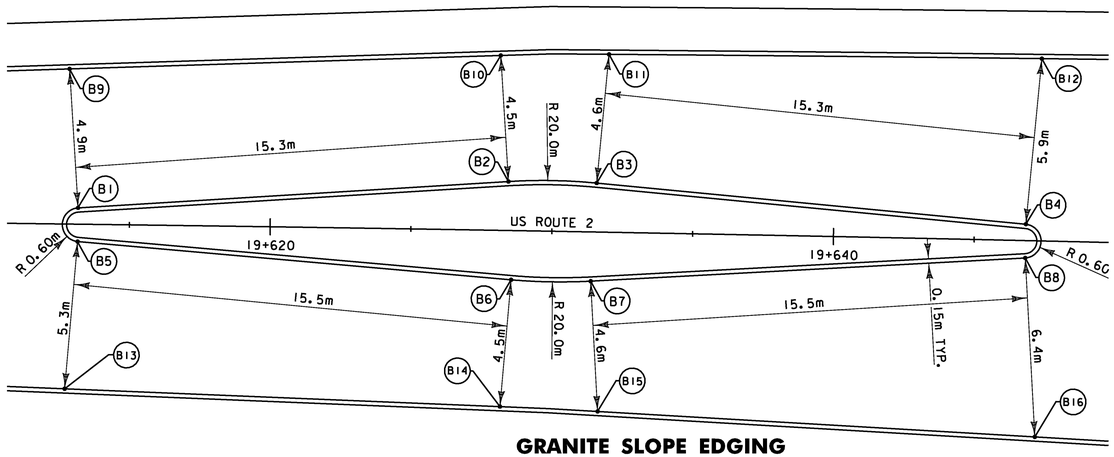

DESC.	STA	OFFSET
B1	19+613.18	0.58 LT
B2	19+628.44	1.74 LT
B3	19+631.57	1.74 LT
B4	19+646.82	0.58 LT
B5	19+613.17	0.62 RT
B6	19+628.59	1.75 RT
B7	19+631.41	1.75 RT
B8	19+646.83	0.62 RT
B9	19+612.81	5.51 LT
B10	19+628.09	6.21 LT
B11	19+631.92	6.32 LT
B12	19+647.26	6.47 LT
B13	19+612.78	5.85 RT
B14	19+628.27	6.26 RT
B15	19+631.74	6.37 RT
B16	19+647.31	6.96 RT

GRANITE SLOPE EDGING ISLAND DETAIL AT EAST GATEWAY

SCALE 1:100

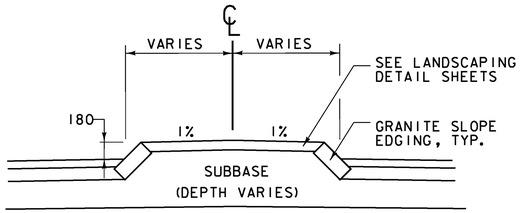

TYPICAL GRANITE SLOPE EDGING ISLAND SECTION

NOT TO SCALE

DESC.	STA	OFFSET
C1	18+882.93	4.50 LT
C2	18+888.55	4.85 LT
C3	18+899.40	8.63 LT
C4	18+902.72	14.73 LT
C5	18+912.01	10.90 LT
C6	18+912.35	9.79 LT
C7	18+912.69	8.95 LT
C8	18+913.94	7.38 LT
C9	18+921.26	4.75 LT
C10	18+919.99	0.75 LT
C11	18+925.00	0.75 LT
C12	18+929.02	0.75 LT
C13	18+934.03	0.25 LT
C14	18+919.94	0.24 RT
C15	18+924.94	0.74 RT
C16	18+928.94	0.75 RT
C17	18+933.99	0.75 RT
C18	18+918.94	4.50 RT
C19	18+923.00	4.75 RT
C20	18+935.00	4.75 RT
C21	18+939.11	4.50 RT
C22	18+930.96	4.75 LT
C23	18+934.93	4.50 LT

VERTICAL GRANITE CURB ISLAND DETAIL AT SCHOOL CROSSWALK

SCALE 1:100

0 2 4 6 8 10

SCALE 1:100

DATUM

VERTICAL	NAVD88
HORIZONTAL	NAD83(92)

NOTE:

1. STATIONS ARE PERPENDICULAR TO THE ALIGNMENT.

Stantec

PROJECT NAME:	DANVILLE
PROJECT NUMBER:	F EGC 028-3(32)
FILE NAME: ...\PlotFiles\019 Islands01.ptf	PLOT DATE: 1/18/2011
DESIGN SUPERVISOR: GARY SANTY	DRAWN BY: STANTEC
DESIGNED BY: STANTEC	CHECKED BY: STANTEC
ISLAND DETAIL SHEET ISDS-1	SHEET 60 OF 306

1/18/2011 1:50:09 PM v:\1953\active\195310033_1092\Highway\PlotFiles\019 Islands01.ptf

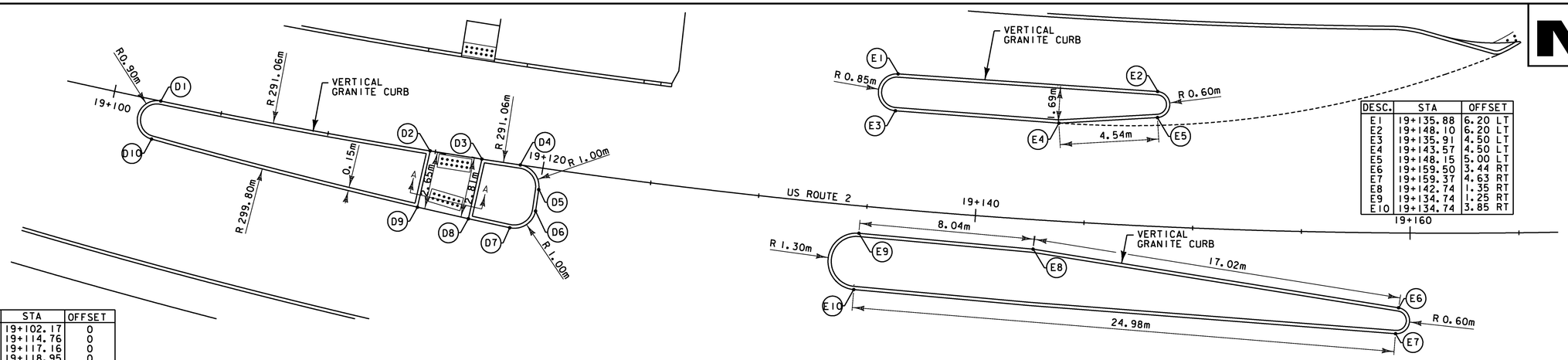

DESC.	STA	OFFSET
D1	19+102.17	0
D2	19+114.76	0
D3	19+117.16	0
D4	19+118.95	0
D5	19+119.95	1.00 RT
D6	19+119.95	1.93 RT
D7	19+118.89	2.93 RT
D8	19+116.97	2.80 RT
D9	19+114.60	2.64 RT
D10	19+102.11	1.80 RT

VERTICAL GRANITE CURB ISLAND DETAILS STA 19+100 THROUGH 19+120

SCALE 1:100

DESC.	STA	OFFSET
E1	19+135.88	6.20 LT
E2	19+148.10	6.20 LT
E3	19+135.91	4.50 LT
E4	19+143.57	4.50 LT
E5	19+148.15	5.00 LT
E6	19+159.50	3.44 RT
E7	19+159.37	4.63 RT
E8	19+142.74	1.35 RT
E9	19+134.74	1.25 RT
E10	19+134.74	3.85 RT

VERTICAL GRANITE CURB ISLAND DETAILS STA 19+135 THROUGH 19+165

SCALE 1:100

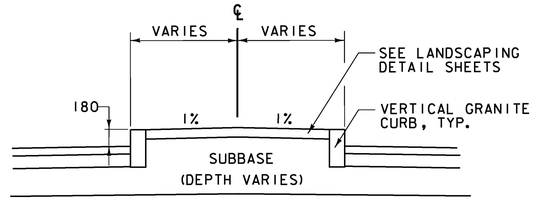

TYPICAL VERTICAL GRANITE CURB ISLAND SECTION

NOT TO SCALE

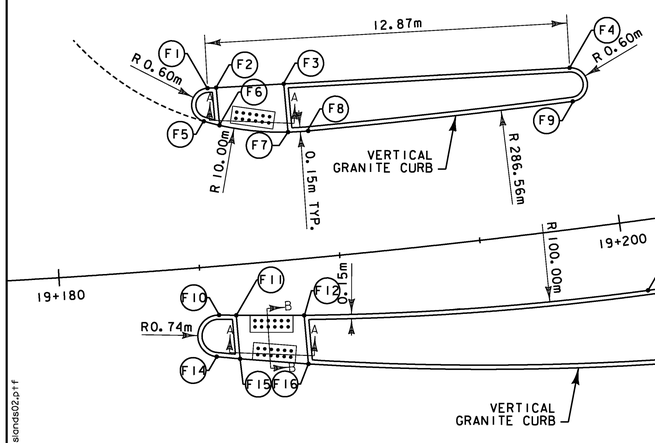

DESC.	STA	OFFSET
F1	19+185.81	6.33 LT
F2	19+186.13	6.32 LT
F3	19+188.58	6.24 LT
F4	19+198.94	5.70 LT
F5	19+185.58	5.17 LT
F6	19+186.13	4.98 LT
F7	19+188.57	4.52 LT
F8	19+189.30	4.50 LT
F9	19+198.90	4.50 LT
F10	19+185.56	1.73 RT
F11	19+186.16	1.79 RT
F12	19+188.55	2.01 RT
F13	19+208.37	2.50 RT

DESC.	STA	OFFSET
F14	19+185.35	3.20 RT
F15	19+186.16	3.34 RT
F16	19+188.54	3.73 RT
F17	19+208.31	5.49 RT
F18	19+200.68	2.50 RT

VERTICAL GRANITE CURB ISLAND DETAIL STA 19+180 THROUGH 19+220

SCALE 1:100

NOTES:
1. SEE LANDSCAPING DETAIL SHEETS FOR STAMPED CONCRETE AND LANDSCAPE ISLAND TREATMENTS.

2. STAMPED CONCRETE IN TRAFFIC ISLANDS SHALL BE PAID AS ITEM 900.675 SPECIAL PROVISION (STAMPED CONCRETE ISLAND, 125 MM)

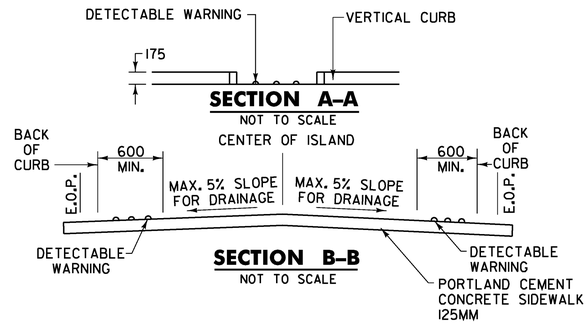

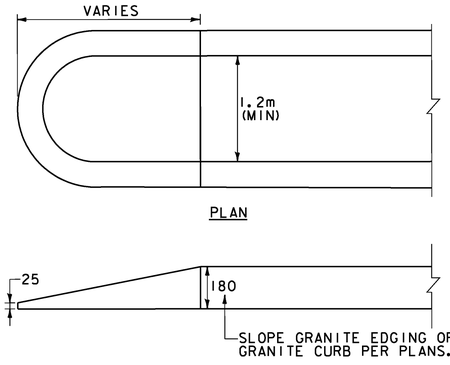

ISLAND NOSE DETAIL

NOT TO SCALE

0 2 4 6 8 10

SCALE 1:100

DATUM

VERTICAL	NAVD88
HORIZONTAL	NAD83(92)

PROJECT NAME:	DANVILLE
PROJECT NUMBER:	F EGC 028-3(32)
FILE NAME: ...\PlotFiles\020 Islands02.ptf	PLOT DATE: 1/18/2011
DESIGN SUPERVISOR: GARY SANTY	DRAWN BY: STANTEC
DESIGNED BY: STANTEC	CHECKED BY: STANTEC
ISLAND DETAIL SHEET ISDS-2	SHEET 61 OF 306

v:\1953\active\195310033_0092\highway\PlotFiles\020 Islands02.ptf
1:50 2:1 PM
1/18/2011

VAOT Metric

LEGEND	
	PROPOSED DRAINAGE PIPE
	PROPOSED PRECAST REINFORCED CONCRETE CATCH BASIN WITH CAST IRON GRATE (PRCCB W/E)
	RURAL FLUSH BASIN
UD	PROPOSED UNDERDRAIN
	STONE FILL
100	DRAINAGE NOTE
U 102	UNDERDRAIN NOTE
	CONSTRUCTION APPROACH
	EXCAVATION OF SURFACES AND PAVEMENTS

210.10 – COLD PLANING, BIT. PAVEMENT
STA. 18+507.73 TO 18+553.73

616.20 – GRANITE SLOPE EDGING
STA. 18+569.8 TO 18+590.2 RT (EAST GATEWAY ISLAND)

616.21 – VERTICAL GRANITE CURB
STA. 18+507.73 TO 18+520.0, LT
STA. 18+507.73 TO 18+600.0, RT
STA. 18+527.9 TO 18+600.0, LT

CONSTRUCT DRIVE

STATION	LOCATION	TYPE	WIDTH
18+523.7	LT	GRAV. RES.	3.6 m

613.10 – STONE FILL, TYPE I
STA. 18+531.0 TO 18+600.0, LT
STA. 18+502.8 TO 18+524.6, RT

SWALE 1 CENTERLINE LAYOUT TABLE

STATION	OFFSET	ELEVATION
18+400	14.3 RT	438.1
18+420	13.7 RT	438.4
18+440	12.8 RT	438.9
18+460	12.4 RT	439.5
18+480	13.5 RT	440.0
18+500	14.8 RT	440.5
18+520	13.8 RT	441.2

617.10 RELOCATE MAIL BOX, SINGLE SUPPORT
STA. 18+520.0, LT

STORMWATER MANAGEMENT

STRUCTURE #	LOCATION	COMMENTS
101A	18+390-18+520	REMOVE EXIST. STONE FILL AND CONST. VEGETATED TREATMENT SWALE 1 WITH PRETREATMENT. MATCH EXIST. GRADE SEE STORMWATER MANAGEMENT DETAILS SWM 3 FOR CONSTRUCTION DETAILS.

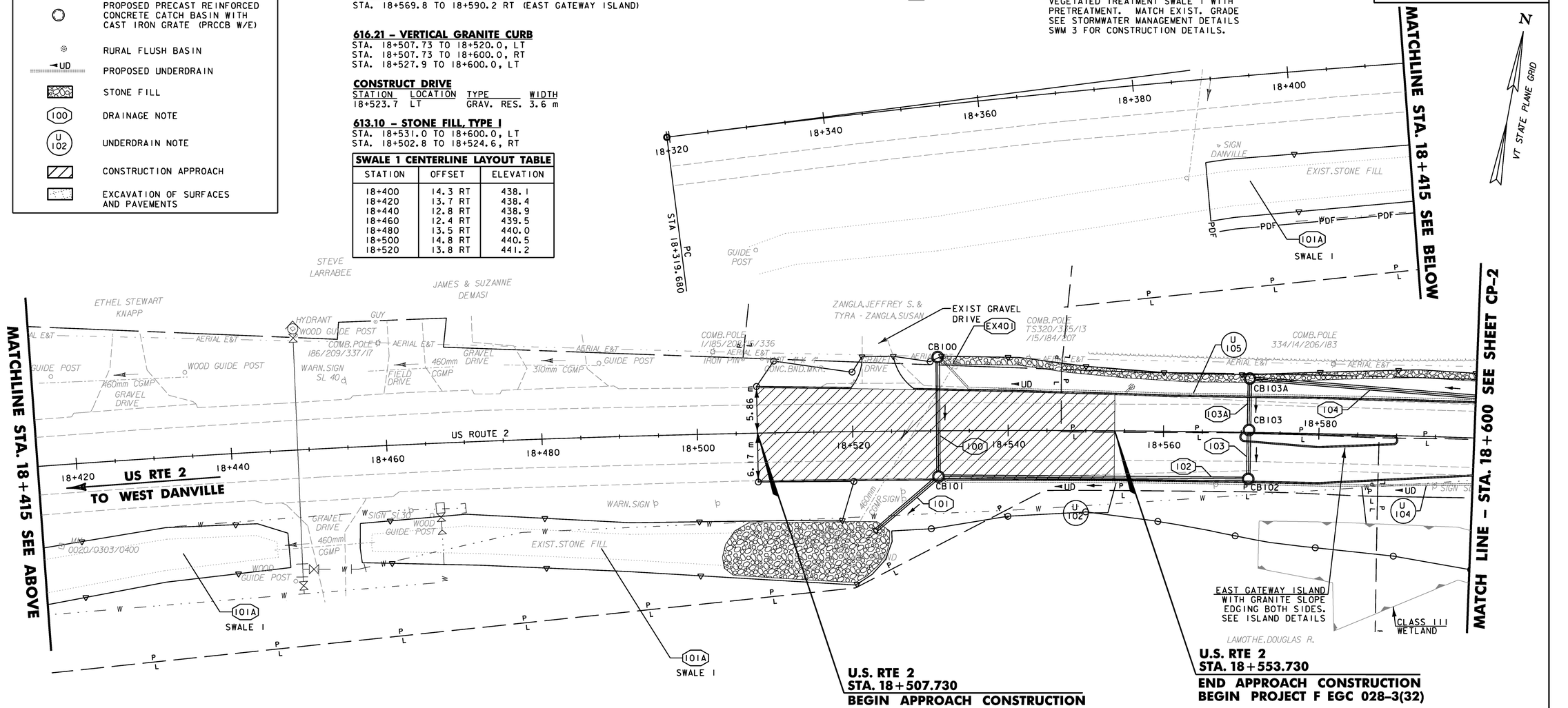

DRAINAGE STRUCTURES – SEE NOTE 6

STRUCTURE NO.	CONSTRUCTION ℄ STATION	COMMENTS
CB100	18+531.0, LT	PRCCB W/E GRATE*
CB101	18+531.0, RT	PRCCB W/E GRATE
CB102	18+571.0, RT	PRCCB W/E GRATE
CB103	18+571.0, LT	PRCCB W/E GRATE
CB103A	18+571.0, LT	PRCCB W/E GRATE

* ALL STRUCTURES ARE 1.2M PRECAST REINFORCED CONCRETE CATCH BASINS EXCEPT WHERE NOTED OTHERWISE (TYP. ALL SHEETS).

DRAINAGE NOTES

100 CONST. ℄ 18+531.0 LT. TO RT.
NEW 450 mm x 14.2m PIPE OPTION 2

101 CONST. ℄ 18+523.0 TO 18+531.0 RT.
NEW 450 mm x 9.9 m PIPE OPTION 3
CONST. STONE FILL, TYPE I @ OUTLET, SEE NOTE 4
INSTALL END SECTION

102 CONST. ℄ 18+531.0 TO 18+571.0 RT
NEW 450 mm x 38.7m PIPE OPTION 3

103 CONST. ℄ 18+571.0 LT. TO RT.
NEW 450 mm x 5.1m PIPE OPTION 2

103A CONST. ℄ 18+571.0 LT. TO RT.
NEW 450 mm x 5.4m PIPE OPTION 2

104 CONST. ℄ 18+571.0 TO 18+625.0 LT.
NEW 450 mm x 53.0m PIPE OPTION 3

EX401 CONST. ℄ 18+520.0 RT. TO 18+533.0 LT.
REMOVE EXISTING 460mm CGMP & INLET STRUCTURE

UNDERDRAIN NOTES

U 102 CONST. ℄ 18+531.0 TO 18+571.0 RT.
NEW 150 mm x 39.0m UND. W/URBAN FLUSHING BASIN IN STRUCTURE #102

U 104 CONST. ℄ 18+571.0 TO 18+625.0 RT.
NEW 150 mm x 54.0m UND. W/URBAN FLUSHING BASIN IN STRUCTURE #104

U 105 CONST. ℄ 18+531.0 TO 18+625.0 LT.
NEW 150 mm x 94.0m UND. W/URBAN FLUSHING BASIN IN STRUCTURE #105
W/RURAL FLUSHING BASIN @18+556.0 LT.

REPLACEMENT SHEETS ISSUED 10/05/11

NOTES

1. ALL EXISTING STORM DRAINAGE PIPES AND STRUCTURES LOCATED COMPLETELY WITHIN THE PROPOSED ROADWAY ARE TO BE REMOVED OR ABANDONED AS DIRECTED BY THE ENGINEER. COST FOR REMOVAL OF EXISTING PIPES SHALL BE PAID AS 204.20 (TRENCH EXCAVATION OF EARTH). ABANDONED PIPES SHALL BE PAID AS SPECIAL PROVISION 900.608 (CONTROLLED DENSITY (FLOWABLE) FILL).
2. CONST. LIMITS REFLECT CUT SLOPE ROUNDING IN ACCORDANCE WITH STATE STANDARDS.
3. ALL DRIVES SHALL BE PAVED TO 3M BEHIND THE SIDEWALK, OR AS SHOWN ON THE PLANS SEE SHEET DRD-1 FOR CONST. DRIVE DETAILS.
4. SEE DRAINAGE DETAIL SHEET DD-1 FOR STORMDRAIN OUTLET PROTECTION DETAIL AND DIMENSIONS.
5. CLEAR ZONE FOR CURBED ROADWAY IS 450MM. CLEAR ZONE LINE IS NOT SHOWN IN CURBED AREAS FOR CLARITY.
6. AN ESTIMATED QUANTITY FOR ADJUSTING ELEVATION OF DRAINAGE CATCH BASINS AND MANHOLES HAS BEEN INCLUDED. THIS PAY ITEM SHALL ONLY BE USED FOR CB'S & MH'S INSTALLED IN AREAS THAT ARE TEMPORARILY PAVED TO MAINTAIN VEHICULAR TRAFFIC. ADJUSTMENT OF CB'S & MH'S IN LAWN AREAS OR OTHER AREAS THAT ARE OUTSIDE OF VEHICULAR TRAFFIC WILL BE PAID INCIDENTAL TO CATCH BASIN AND MANHOLE ITEMS.

DATUM
VERTICAL NAVD88
HORIZONTAL NAD83(92)

0 10 20
SCALE 1:250

Stantec

STA 18+507.730 TO 18+600

PROJECT NAME: DANVILLE
PROJECT NUMBER: F EGC 028-3(32)

FILE NAME: ...\PlotFiles\025 all01.plt
DESIGN SUPERVISOR: GARY SANTY
DESIGNED BY: STANTEC
CONSTRUCTION PLAN CP-1
PLOT DATE: 10/4/2011
DRAWN BY: STANTEC
CHECKED BY: STANTEC
SHEET 62 OF 306

10/4/2011 11:42:18 PM V:\1953\active\195300033.0092\Revised Plans\PlotFiles\025 all01.plt

616.21 – VERTICAL GRANITE CURB
STA. 18+600.0 TO 18+646.2, LT
STA. 18+600.0 TO 18+653.4, RT
STA. 18+653.3 TO 18+758.1, LT
STA. 18+667.8 TO 18+770.0, RT
STA. 18+768.5 TO 18+770.0, LT

613.10 – STONE FILL, TYPE I
STA. 18+600.0 TO 18+625.0, LT

617.10 RELOCATE MAIL BOX, SINGLE SUPPORT
STA. 18+653.0, RT (RETAIN EXIST LOCATION)
STA. 18+758.0, LT.

629.20 ADJUST ELEVATION OF VALVE BOX
STA. 18+617.9, RT.

629.29 RELOCATE HYDRANT
STA. 18+705.8, RT. (ADJUST ELEVATION ONLY)

CONSTRUCT DRIVE

STATION	LOCATION	TYPE	WIDTH
18+648.4	LT	BIT. RES.	6.2 m
18+660.5	RT	GRAV. COM.	10.0 m
18+762.4	LT	CONC. & GRAV. COM.	5.0 m

VAOT Metric

N
VT STATE PLANE GRID

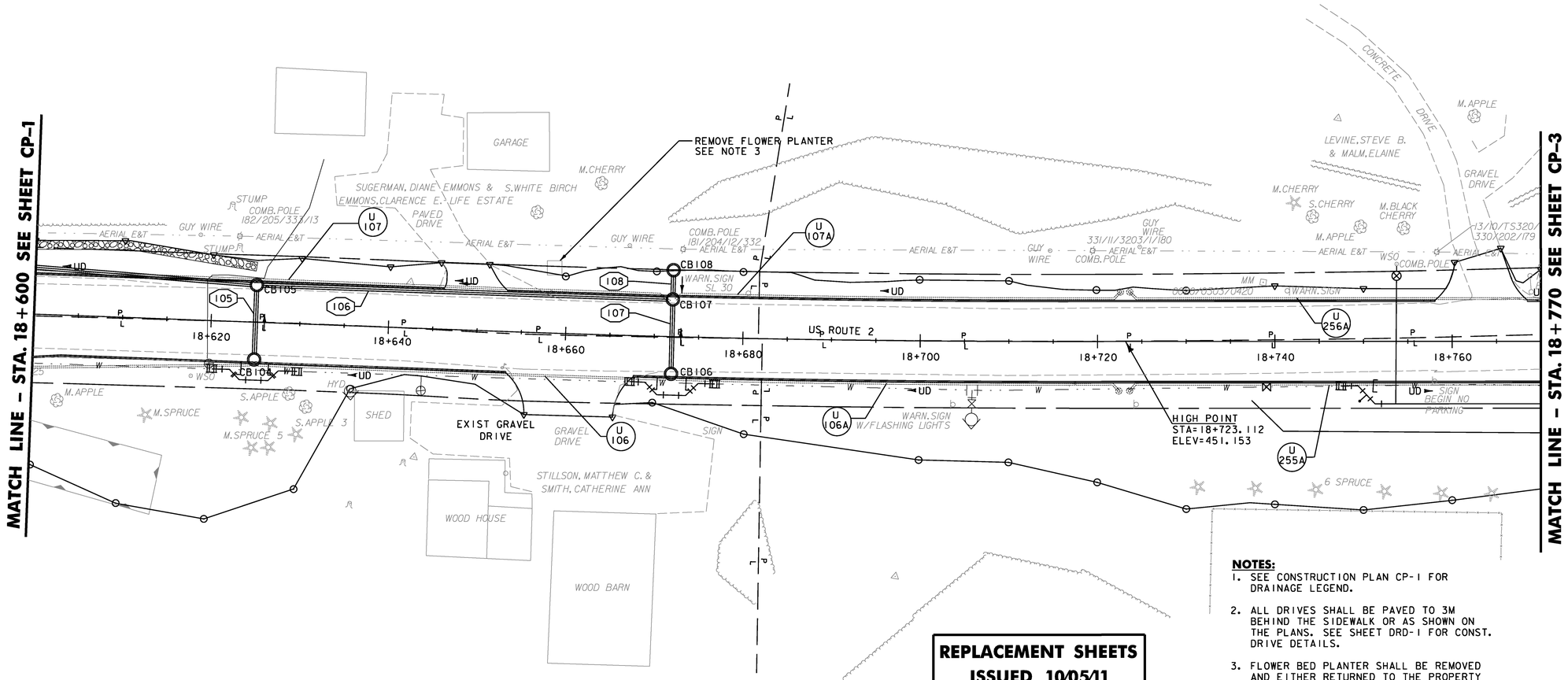

REPLACEMENT SHEETS ISSUED 10/05/11

NOTES:
1. SEE CONSTRUCTION PLAN CP-1 FOR DRAINAGE LEGEND.
2. ALL DRIVES SHALL BE PAVED TO 3M BEHIND THE SIDEWALK OR AS SHOWN ON THE PLANS. SEE SHEET DRD-1 FOR CONST. DRIVE DETAILS.
3. FLOWER BED PLANTER SHALL BE REMOVED AND EITHER RETURNED TO THE PROPERTY OWNER, DISPOSED OF OR AS DIRECTED BY THE RESIDENT ENGINEER. COST FOR THIS WORK SHALL BE INCIDENTAL TO ALL OTHER CONTRACT ITEMS.
4. AN ESTIMATED QUANTITY FOR ADJUSTING ELEVATION OF DRAINAGE CATCH BASINS AND MANHOLES HAS BEEN INCLUDED. THIS PAY ITEM SHALL ONLY BE USED FOR CB'S & MH'S INSTALLED IN AREAS THAT ARE TEMPORARILY PAVED TO MAINTAIN VEHICULAR TRAFFIC. ADJUSTMENT OF CB'S & MH'S IN LAWN AREAS OR OTHER AREAS THAT ARE OUTSIDE OF VEHICULAR TRAFFIC WILL BE PAID INCIDENTAL TO CATCH BASIN AND MANHOLE ITEMS.

STA 18+600 TO 18+770

DRAINAGE STRUCTURES – SEE NOTE 4

STRUCTURE NO.	CONSTRUCTION ℄ STATION	COMMENTS
CB104	18+625.0, RT	PRCCB W/E GRATE*
CB105	18+625.0, LT	PRCCB W/E GRATE
CB106	18+672.0, RT	PRCCB W/D GRATE*
CB107	18+672.0, LT	PRCCB W/D GRATE
CB108	18+672.0, LT	PRCCB W/E GRATE

* NO SUMP, USE OFFSET RISER IF NECESSARY TO AVOID WATERLINE

DRAINAGE NOTES
(105) CONST. ℄ 18+625 RT. TO LT. NEW 450 mm x 7.2m PIPE OPTION 2
(106) CONST. ℄ 18+625.0 TO 18+672.0 LT. NEW 450 mm x 45.9m PIPE OPTION 3
(107) CONST. ℄ 18+672.0 RT. TO LT. NEW 450 mm x 7.2m PIPE OPTION 2
(108) CONST. ℄ 18+672.0 LT. NEW 450 mm x 2.1m PIPE OPTION 3

UNDERDRAIN NOTES
(U 106) CONST. ℄ 18+625.0 TO 18+672.0 RT. NEW 150 mm x 47.1m UND. W/ URBAN FLUSHING BASIN IN STRUCTURE #106
(U 107) CONST. ℄ 18+625.0 TO 18+672.0 LT. NEW 150 mm x 47.1m UND. W/URBAN FLUSHING BASIN IN STRUCTURE #107
(U 106A) CONST. ℄ 18+672.0 TO 18+722.3 RT. NEW 150 mm x 50.6m UND. W/RURAL FLUSHING BASIN @ 18+722.3 RT
(U 107A) CONST. ℄ 18+672.0 TO 18+722.5 LT. NEW 150 mm x 50.6m UND. W/RURAL FLUSHING BASIN @ 18+722.5 LT

UNDERDRAIN NOTES
(U 255A) CONST. ℄ 18+723.7 TO 18+786.0 RT. NEW 150 mm x 62.6m UND. W/RURAL FLUSHING BASIN @ 18+723.0 RT
(U 256A) CONST. ℄ 18+723.7 TO 18+786.0 LT. NEW 150 mm x 62.6m UND. W/RURAL FLUSHING BASIN @ 18+723.0 LT.

DATUM
VERTICAL NAVD88
HORIZONTAL NAD83(92)

0 10 20
SCALE 1:250

Stantec

PROJECT NAME:	DANVILLE
PROJECT NUMBER:	F EGC 028-3(32)
FILE NAME: ...\PlotFiles\026 all02.ptf	PLOT DATE: 10/4/2011
DESIGN SUPERVISOR: GARY SANTY	DRAWN BY: STANTEC
DESIGNED BY: STANTEC	CHECKED BY: STANTEC
CONSTRUCTION PLAN CP-2	SHEET 63 OF 306

10/4/2011 11:42:18 PM V:\1953\active\195310033.0092\Revised Plans\PlotFiles\026 all02.ptf

203.28 – EXCAVATION OF SURFACES AND PAVEMENTS

STA. 1+005.0 TO 1+048.0, RT (WALDEN HILL RD)
STA. 18+922.0 RT. (EXIST SCHOOL WALK)

616.21 – VERTICAL GRANITE CURB

STA. 1+018.4 TO 1+040.0, LT*
STA. 1+020.0, RT TO 18+926.2, LT*
STA. 1+020.7 TO 1+030.0, RT*
STA. 18+770.0 TO 18+786.5, LT
STA. 18+770.0 TO 18+903.9, RT
STA. 18+794.5 TO 18+822.3, LT
STA. 18+835.2 TO 1+017.6, LT*
STA. 18+908.0 TO 18+926.2, RT
STA. 18+919.5 TO 18+925.8, LT & RT., ISLAND
STA. 18+927.8 TO 18+930.0, LT
STA. 18+927.8 TO 18+930.0, RT
STA. 18+928.2 TO 18+930.0, LT & RT., ISLAND

*PROVIDE CURB BREAK FOR DRAINAGE

620.55 – REMOVAL OF EXISTING FENCE

STA. 18+926.0 TO 18+928.0, RT
STA. 18+787.1 TO 18+913.7, RT
STA. 18+917.2 TO 18+920.5, RT

616.47 – BITUMINOUS CONCRETE GUTTERS AND TRAFFIC ISLANDS

STA. 1+017.5 TO 1+018.5, LT. 1m x 2m x 50mm
STA. 1+020.0 TO 1+021.0, RT. 1m x 2.5m x 50mm

618.10 – PORTLAND CEMENT CONCRETE SIDEWALK, 125MM

STA. 18+797.1 TO 18+930.0, RT
STA. 18+920.0 TO 18+928.0, RT, INDIV. WALK
STA. 18+926.2 TO 18+930.0, LT

CONSTRUCT DRIVE

STATION	LOCATION	TYPE	WIDTH	RAMP
1+036.6	RT WALDEN HILL	GRAV. RES.	8.3m	-
18+791.5	LT	GRAV. RES.	3.5 m	-
18+828.7	LT	GRAV. COM.	7.2 m	-
18+906.0	RT	GRAV. RES.	4.0 m	TYPE 2

629.20 – ADJUST ELEVATION OF VALVE BOX

STA. 18+926.8, RT

DRAINAGE STRUCTURES – SEE NOTE 5

STRUCTURE NO.	CONSTRUCTION ℄ STATION	COMMENTS
CB247	18+912.5, RT.	1.8M PRCCB W/E GRATE
MH247A	18+913.7, LT.	MANHOLE W/COVER
CB248	18+915.0, LT.	PRCCB W/D GRATE
CB249	1+018.0, LT.	PRCCB W/E GRATE
CB251	18+885.0, LT.	PRCCB W/E GRATE
CB252	18+885.0, RT.	PRCCB W/E GRATE
CB253	18+835.0, RT.	PRCCB W/E GRATE
CB254	18+835.0, LT.	PRCCB W/E GRATE
CB255	18+786.0, RT.	PRCCB W/E GRATE
CB256	18+786.0, LT.	PRCCB W/E GRATE
CB257	1+021.0, RT.	PRCCB W/D GRATE

617.10 RELOCATE MAIL BOX, SINGLE SUPPORT

STA. 1+020.0, LT.

618.30 – DETECTABLE WARNING SURFACES

STATION	RAMP
STA. 18+927.0, LT	TYPE 6
STA. 18+927.0, RT	TYPE 6

900.675 – SPECIAL PROVISION (STAMPED CONCRETE ISLAND, 125MM)

STA. 18+919.5 TO 18+925.8, LT & RT
STA. 18+928.2 TO 18+930.0, LT & RT

NOTES:

1. SEE CONSTRUCTION PLAN CP-1 FOR DRAINAGE LEGEND.
2. ALL DRIVES SHALL BE PAVED TO 3M BEHIND THE SIDEWALK OR AS SHOWN ON THE PLANS. SEE SHEET DRD-1 FOR CONST. DRIVE DETAILS.
3. SEE VTRANS STD DRAWINGS C-2A AND C-2B FOR DRIVEWAY CROSSING DETAILS.
4. SEE VTRANS STD DRAWINGS C-3A AND C-3B FOR SIDEWALK RAMP DETAILS.
5. AN ESTIMATED QUANTITY FOR ADJUSTING ELEVATION OF DRAINAGE CATCH BASINS AND MANHOLES HAS BEEN INCLUDED. THIS PAY ITEM SHALL ONLY BE USED FOR CB'S & MH'S INSTALLED IN AREAS THAT ARE TEMPORARILY PAVED TO MAINTAIN VEHICULAR TRAFFIC. ADJUSTMENT OF CB'S & MH'S IN LAWN AREAS OR OTHER AREAS THAT ARE OUTSIDE OF VEHICULAR TRAFFIC WILL BE PAID INCIDENTAL TO CATCH BASIN AND MANHOLE ITEMS.

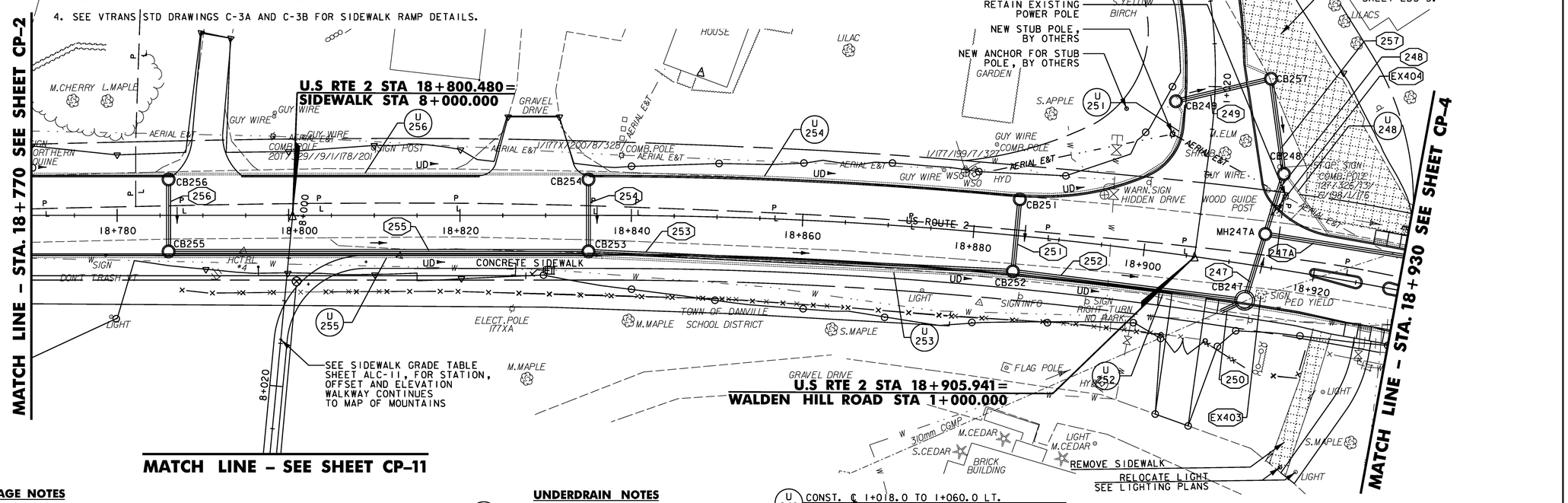

DRAINAGE NOTES

(250) CONST. ℄ 18+910.0 TO 18+912.5 RT. NEW 300 mm x 2.4m PCCSP CONNECT TO EXISTING CGMP

(247) CONST. ℄ 18+912.5 RT. TO 18+913.7 LT. NEW 450 mm x 6.9m PIPE OPTION 2

(247A) CONST. ℄ 18+913.7 TO 18+935.0 LT. NEW 450 mm x 20.3m PIPE OPTION 1

(248) CONST. ℄ 18+915.0 LT. TO 18+913.7 LT. NEW 450 mm x 10.8m PIPE OPTION 2

(249) CONST. ℄ 1+018.0 LT. TO 1+021.0 RT. NEW 450 mm x 10.2m PIPE OPTION 2

(251) CONST. ℄ 18+885.0 LT. TO RT. NEW 450 mm x 7.3m PIPE OPTION 2

(252) CONST. ℄ 18+885.0 TO 18+912.5 RT. NEW 450 mm x 26.1m PIPE OPTION 1

(253) CONST. ℄ 18+835.0 TO 18+885.0 RT. NEW 450 mm x 48.4m PIPE OPTION 3

(254) CONST. ℄ 18+835.0 LT. TO RT. NEW 450 mm x 7.2m PIPE OPTION 2

(255) CONST. ℄ 18+786.0 TO 18+835.0 RT. NEW 450 mm x 47.8m PIPE OPTION 3

(256) CONST. ℄ 18+786.0 LT. TO RT. NEW 450 mm x 7.2m PIPE OPTION 2

(257) CONST. ℄ 1+021.0 RT. TO 18+915.0 LT. NEW 450 mm x 10.0m PIPE OPTION 3

(EX403) CONST. ℄ 18+914.3 RT. TO 18+929.0 LT REMOVE EXISTING PIPE & INLET STRUCTURE

(EX404) CONST. ℄ 18+914.4 TO 18+937.9 LT. REMOVE EXISTING 310 CGMP & INLET STRUCTURE

UNDERDRAIN NOTES

(U 255) CONST. ℄ 18+786.0 TO 18+835.0 RT. NEW 150 mm x 49.0m UND. W/URBAN FLUSHING BASIN IN STRUCTURE #255

(U 256) CONST. ℄ 18+786.0 TO 18+835.0 LT. NEW 150 mm x 49.0m UND. W/URBAN FLUSHING BASIN IN STRUCTURE #256

(U 253) CONST. ℄ 18+835.0 TO 18+885.0 RT. NEW 150 mm x 49.7m UND. W/URBAN FLUSHING BASIN IN STRUCTURE #253

(U 254) CONST. ℄ 18+835.0 TO 18+885.0 LT. NEW 150 mm x 50.2m UND. W/URBAN FLUSHING BASIN IN STRUCTURE #254

(U 252) CONST. ℄ 18+885.0 TO 18+936 RT. NEW 150 mm x 49.7m UND. W/URBAN FLUSHING BASIN IN STRUCTURE #252

(U 251) CONST. ℄ 18+885.0 TO 1+018.0 LT. NEW 150 mm x 24.0m UND. W/URBAN FLUSHING BASIN IN STRUCTURE #251

(U 249) CONST. ℄ 1+018.0 TO 1+060.0 LT. NEW 150 mm x 39.3m UND. W/RURAL FLUSHING BASIN @ 1+060.0 LT, CONST. @ +0.50% GRADE @ STA. 1+018.0 - STA. 1+037.9 LT.

(U 248) CONST. ℄ 1+011.0 RT. TO 18+936.1 LT. NEW 150 mm x 23.7m UND. W/URBAN FLUSHING BASIN IN STRUCTURE #248

(U 257A) CONST. ℄ 1+021.0 TO 1+060.0 RT. NEW 150 mm x 42.7m UND. W/RURAL FLUSHING BASIN @ 1+060.0 RT, CONST. @ +0.50% GRADE @ STA. 1+021.0 - STA. 1+028.2 RT.

DATUM
VERTICAL NAVD88
HORIZONTAL NAD83(92)

REPLACEMENT SHEETS ISSUED 10/05/11

0 10 20
SCALE 1:250

Stantec

STA 18+770 TO 18+930

PROJECT NAME: DANVILLE
PROJECT NUMBER: F EGC 028-3(32)

FILE NAME: ...\PlotFiles\027 all03.ptf
DESIGN SUPERVISOR: GARY SANTY
DESIGNED BY: STANTEC
CONSTRUCTION PLAN CP-3
PLOT DATE: 10/4/2011
DRAWN BY: STANTEC
CHECKED BY: STANTEC
SHEET 64 OF 306

10/4/2011 1:42:19 PM V:\1953\active\195300033.0092\Revised Plans\PlotFiles\027 all03.ptf

616.21 – VERTICAL GRANITE CURB
STA. 18+930.0 TO 18+956.0, LT
STA. 18+930.0 TO 18+960.5, RT
STA. 18+930.0 TO 18+934.5, LT & RT., ISLAND
STA. 18+960.8 TO 18+990.9, LT
STA. 18+963.3 TO 18+979.0, RT
STA. 18+982.5 TO 19+003.4, RT
STA. 18+998.5 TO 19+052.3, LT
STA. 19+010.6 TO 19+015.5, RT
STA. 19+019.1 TO 19+026.9, RT
STA. 19+034.1 TO 19+042.5, RT
STA. 19+054.5 TO 19+060.4, RT
STA. 19+059.5 TO 19+070.0, LT
STA. 19+067.2 TO 19+068.9, RT P. LOT
STA. 19+067.6 TO 19+070.0, RT
STA. 19+069.3 TO 19+070.0, RT P. LOT

618.10 – PORTLAND CEMENT CONCRETE SIDEWALK, 125MM
STA. 18+930.0 TO 18+990.9, LT
STA. 18+930.0 TO 19+015.3, RT
STA. 18+964.8 TO 18+965.7, LT, INDIV. WALK
STA. 18+998.5 TO 19+052.3, LT
STA. 19+019.1 TO 19+026.9, RT
STA. 19+034.1 TO 19+042.4, RT
STA. 19+054.4 TO 19+060.4, RT
STA. 19+059.5 TO 19+070.0, LT
STA. 19+067.3 TO 19+070.0, RT

618.11 – PORTLAND CEMENT CONCRETE SIDEWALK, 200MM
STA. 18+990.9 TO 18+998.5, LT
STA. 19+015.3 TO 19+019.1, RT
STA. 19+026.9 TO 19+034.1, RT
STA. 19+042.7 TO 19+054.4, RT
STA. 19+052.3 TO 19+059.5, LT
STA. 19+060.4 TO 19+067.3, RT

617.10 RELOCATE MAIL BOX, SINGLE SUPPORT
STA. 19+014.0, RT.

620.50 REMOVING AND RESETTING FENCE
STA. 18+943.6 TO 18+956.5 RT (RESET TO ORIGINAL LOCATION)

900.645 – SPECIAL PROVISION (REMOVE AND SALVAGE WOODEN RETAINING WALL)
STA. 18+958.78 TO 18+959.20, RT 2.0m WIDE

900.645 – SPECIAL PROVISION (REMOVE AND SALVAGE CONCRETE WHEEL STOPS)
STA. 19+030.0 TO 19+050.0 LT

900.675 – SPECIAL PROVISION (STAMPED CONCRETE ISLAND, 125mm)
STA. 18+930.0 TO 18+934.5, LT & RT

CONSTRUCT DRIVE – SEE NOTES 2&3

STATION	LOCATION	TYPE	WIDTH	RAMP
18+958.4	LT	GRAV. RES.	4.9 m	TYPE 2
18+961.8	RT	BIT. RES.	2.7 m	TYPE 2
18+980.8	RT	BIT. RES.	3.6 m	TYPE 2
18+994.7	LT	GRAV. COM.	7.6 m	TYPE 2
19+007.0	RT	GRAV. RES.	7.2 m	TYPE 7
19+017.3	RT	BIT. COM.	3.6 m	TYPE 7
19+030.5	RT	BIT. COM.	12.0 m	TYPE 7
19+048.4	RT	BIT. COM.	7.2 m	TYPE 7
19+055.8	LT	GRAV. COM.	7.2 m	TYPE 2
19+063.8	RT	BIT. COM.	6.9 m	TYPE 2

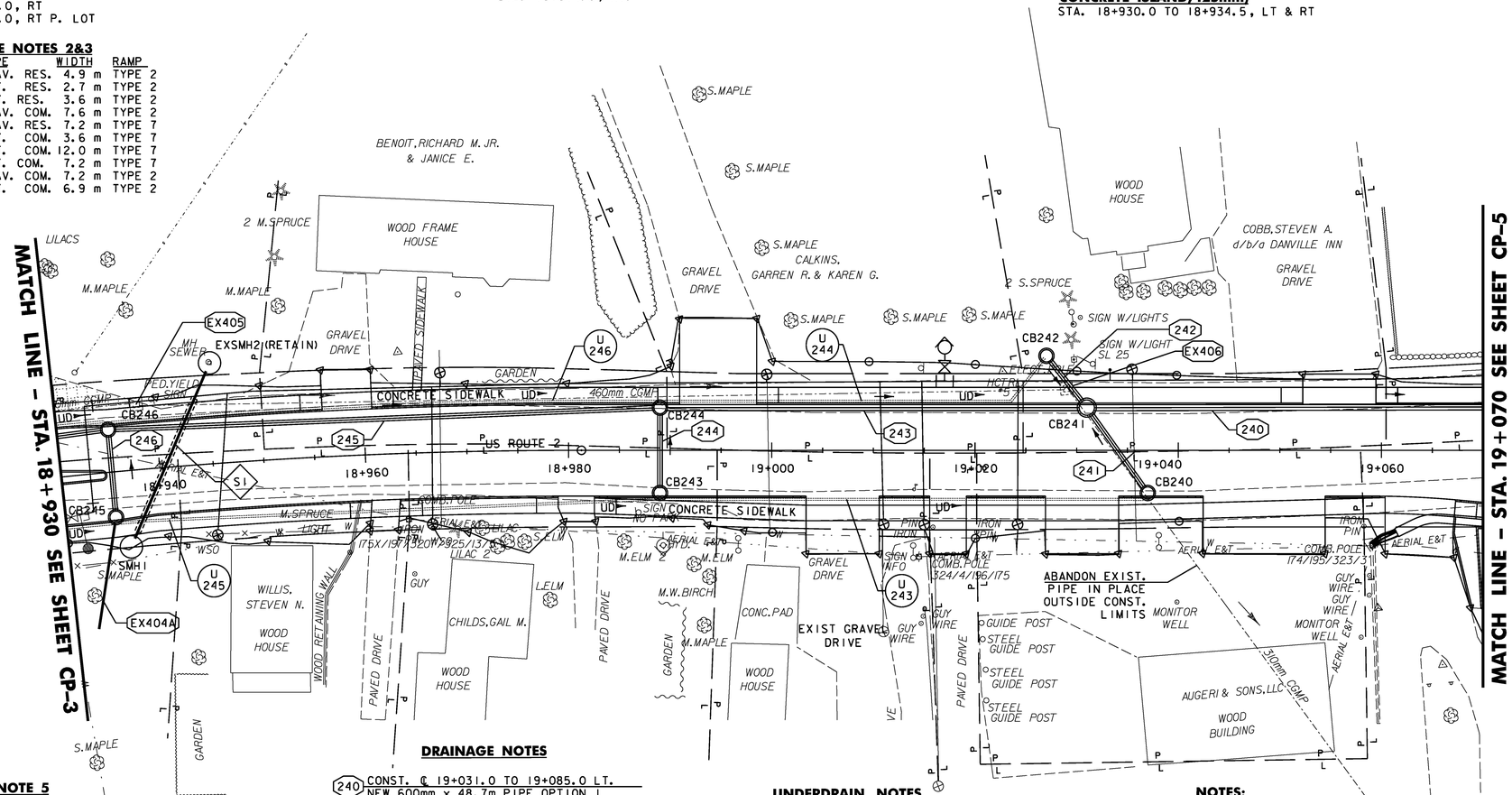

DRAINAGE STRUCTURES – SEE NOTE 5

STRUCTURE NO.	CONSTRUCTION ℄ STATION	COMMENTS
CB240	19+037.0, RT.	PRCCB W/E GRATE, NO SUMP
CB241	19+031.0, LT.	1.8M PRCCB W/E GRATE, 6" SUMP
CB242	19+027.0, LT.	PRCCB W/D GRATE, NO SUMP
CB243	18+989.0, RT.	PRCCB W/E GRATE, NO SUMP
CB244	18+989.0, LT.	PRCCB W/E GRATE, 6" SUMP
CB245	18+935.0, RT.	PRCCB W/E GRATE, NO SUMP
CB246	18+935.0, LT.	PRCCB W/E GRATE, 6" SUMP
SMH1	18+936.3, RT.	NEW SEWER MANHOLE PER D-22 W/ OUTSIDE DROP, RIM = 441.200 INVERT ⊗ DROP = 437.753 INVERT ⊗ CLEANOUT = 440.097

SEWER NOTES

(S1) CONST. ℄ 18+936.3 RT. TO 18+945.4 LT.
NEW 200mm x 17.9m PVC SEWER @0.40% W/ 450mm SLEEVE
INVERT IN = 437.677
INVERT OUT = 437.605
(MATCH EXISTING INVERT ELEVATION AT EXSMH2)

DRAINAGE NOTES

(240) CONST. ℄ 19+031.0 TO 19+085.0 LT.
NEW 600mm x 48.7m PIPE OPTION 1

(241) CONST. ℄ 19+031.0 LT. TO 19+037.0 RT.
NEW 450mm x 7.4m PIPE OPTION 2

(242) CONST. ℄ 19+027.0 TO 19+031.0 LT.
NEW 450mm x 8.3m PIPE OPTION 3

(243) CONST. ℄ 18+989.0 TO 19+031.0 LT.
NEW 600mm x 44.8m PIPE OPTION 1

(244) CONST. ℄ 18+989.0 RT. TO LT.
NEW 450mm x 7.2m PIPE OPTION 2

(245) CONST. ℄ 18+935.0 TO 18+989.0 LT.
NEW 450mm x 53.2m PIPE OPTION 1

(246) CONST. ℄ 18+935.0 RT. TO LT.
NEW 450mm x 7.5m PIPE OPTION 2

(EX404A) CONST. ℄ 18+935, RT.
TIE EXISTING 150mm PVC ROOF DRAIN INTO CB245 (CONTRACTOR TO VERIFY DRAIN LOCATION AND INVERT ELEVATION)

(EX405) CONST. ℄ 18+937.9 TO 19+029.0 LT.
REMOVE EXISTING 460 mm CGMP & INLET STRUCTURE

(EX406) CONST. ℄ 19+029.0 LT. TO 19+039.0 RT.
REMOVE EXISTING 310 mm CGMP & INLET STRUCTURE

UNDERDRAIN NOTES

(U 245) CONST. ℄ 18+935.0 TO 18+989.0 RT.
NEW 150mm x 53.6m UND. W/URBAN FLUSHING BASIN IN STRUCTURE #245

(U 246) CONST. ℄ 18+935.0 TO 18+989.0 LT.
NEW 150mm x 54.3m UND. W/URBAN FLUSHING BASIN IN STRUCTURE #246, CONST. PIPE @ -0.50% GRADE @ 18+984.5 - 18+989.0 LT

(U 244) CONST. ℄ 18+989.0 TO 19+035.0 LT.
NEW 150mm x 45.6m UND. W/URBAN FLUSHING BASIN IN STRUCTURE #244

(U 243) CONST. ℄ 18+989.0 TO 19+037.0 RT.
NEW 150mm x 48.0m UND. W/URBAN FLUSHING BASIN IN STRUCTURE #243 CONST. PIPE @ -0.50% GRADE @ 19+031.5 - 19+037.0 RT

NO UNDERDRAIN CONSTRUCTED BETWEEN CB241 AND 240B AND CB240 AND CB240A DUE TO CONTAMINATED SOILS.

NOTES:

1. SEE CONSTRUCTION PLAN CP-1 FOR DRAINAGE LEGEND.
2. ALL DRIVES SHALL BE PAVED TO 3M BEHIND THE SIDEWALK, OR AS SHOWN ON THE PLANS. SEE SHEET DRD-1 FOR CONST. DRIVE DETAILS.
3. SEE VTRANS STD DRAWINGS C-2A AND C-2B FOR DRIVEWAY CROSSING DETAILS.
4. SEE VTRANS STD DRAWINGS C-3A AND C-3B FOR SIDEWALK RAMP DETAILS.
5. AN ESTIMATED QUANTITY FOR ADJUSTING ELEVATION OF DRAINAGE CATCH BASINS AND MANHOLES HAS BEEN INCLUDED. THIS PAY ITEM SHALL ONLY BE USED FOR CB'S & MH'S INSTALLED IN AREAS THAT ARE TEMPORARILY PAVED TO MAINTAIN VEHICULAR TRAFFIC. ADJUSTMENT OF CB'S & MH'S IN LAWN AREAS OR OTHER AREAS THAT ARE OUTSIDE OF VEHICULAR TRAFFIC WILL BE PAID INCIDENTAL TO CATCH BASIN AND MANHOLE ITEMS.

DATUM
VERTICAL NAVD88
HORIZONTAL NAD83(92)

REPLACEMENT SHEETS ISSUED 02/24/2012

0 10 20
SCALE 1:250

STA 18+930 TO 19+070

PROJECT NAME: DANVILLE
PROJECT NUMBER: F EGC 028-3(32)

FILE NAME: ...\PlotFiles\028 all04.ptf
DESIGN SUPERVISOR: GARY SANTY
DESIGNED BY: STANTEC
CONSTRUCTION PLAN CP-4
PLOT DATE: 2/24/2012
DRAWN BY: STANTEC
CHECKED BY: STANTEC
SHEET 65 OF 306

2/24/2012 4:30:08 PM V:\1953\active\195300033.0092\Revised Plans\PlotFiles\028 all04.ptf

CONSTRUCT DRIVE – SEE NOTES 5 & 7

STATION	LOCATION	TYPE	WIDTH	RAMP
19+079.4	RT	BIT. COMM	7.8 m	TYPE 2
19+088.2	LT	GRAV. RES	3.6 m	TYPE 7
19+100.1	LT	BIT. COMM	7.2 m	TYPE 7
19+130.3	LT	GRAV. COMM	9.0 m	TYPE 7 & 2
19.156.2	LT	BIT. COMM	15.0 m	-
19+204.1	LT	BIT. COMM	11.0 m	TYPE 2
19+226.6	LT	GRAV. RES	6.0 m	TYPE 2
19+258.7	RT	GRAV. RES	3.1 m	-

618.30 – DETECTABLE WARNING SURFACES – SEE NOTE 8

STATION	RAMP
STA. 19+115.4, RT	TYPE 6
STA. 19+115.8, RT	-
STA. 19+116.0, RT	-
STA. 19+116.3, LT	TYPE 4
STA. 19+121.1, RT	TYPE 6
STA. 19+132.3, RT	TYPE 6
STA. 19+165.9, LT	TYPE 1
STA. 19+169.9, RT	TYPE 6
STA. 19+181.9, RT	TYPE 6
STA. 19+187.4, LT	-
STA. 19+187.4, RT	-
STA. 19+187.4, RT	-
STA. 19+187.6, RT	TYPE 6
STA. 19+210.6, LT	TYPE 1
STA. 19+222.0, RT	TYPE 6
STA. 19+228.2, RT	TYPE 6

617.10 RELOCATE MAIL BOX, SINGLE SUPPORT
STA. 19+093.0, LT.

616.41 – REMOVAL OF EXISTING CURB
STA. 19+184.5 TO 19+199.8, LT.

VTrans Metric

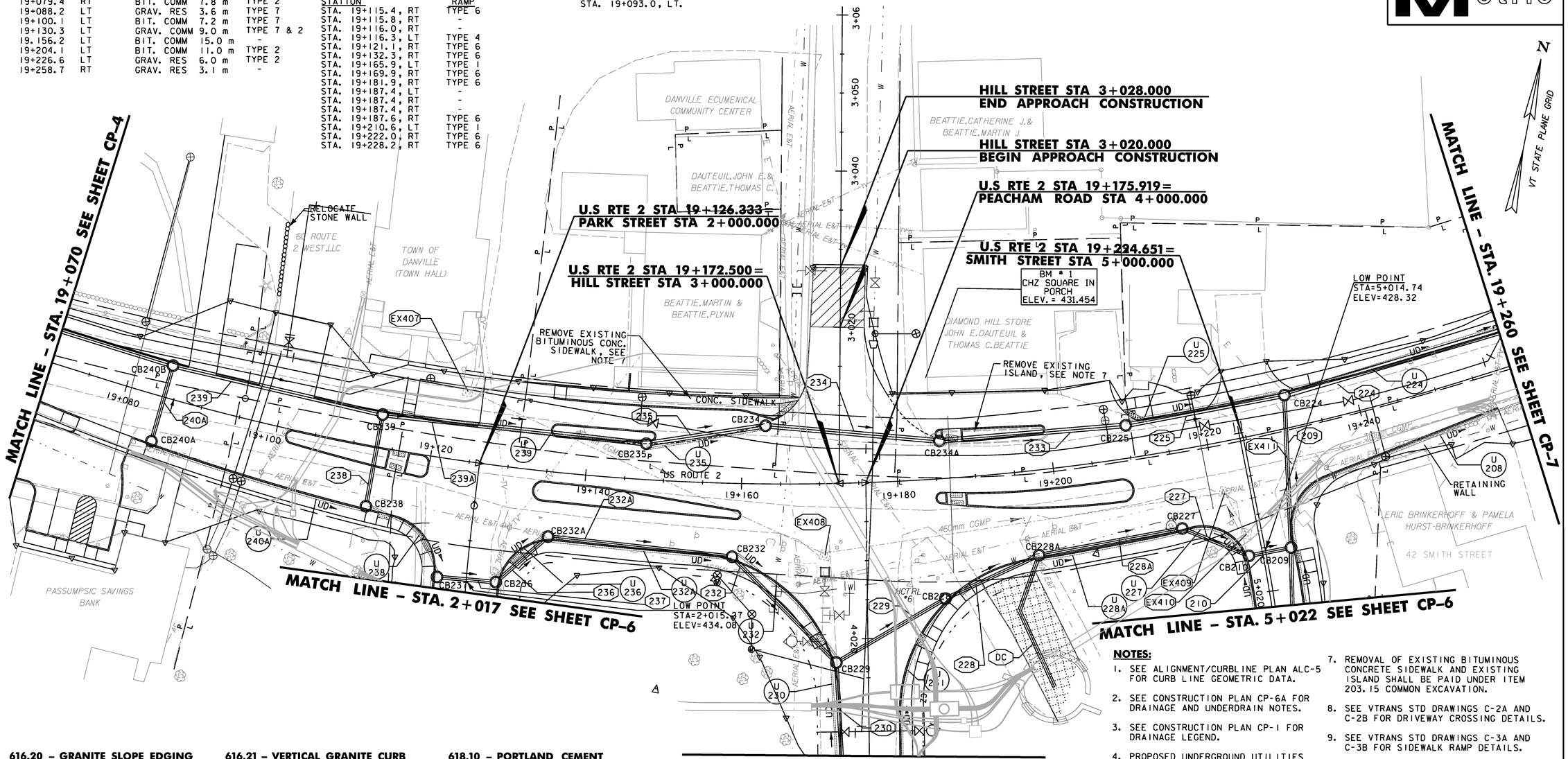

NOTES:

1. SEE ALIGNMENT/CURBLINE PLAN ALC-5 FOR CURB LINE GEOMETRIC DATA.
2. SEE CONSTRUCTION PLAN CP-6A FOR DRAINAGE AND UNDERDRAIN NOTES.
3. SEE CONSTRUCTION PLAN CP-1 FOR DRAINAGE LEGEND.
4. PROPOSED UNDERGROUND UTILITIES SHOWN IN GREY. SEE UTILITY PLANS FOR UNDERGROUND UTILITY DATA.
5. ALL DRIVES SHALL BE PAVED TO 3M BEHIND THE SIDEWALK, OR AS SHOWN ON THE PLANS. SEE SHEET DRD-1 FOR CONST. DRIVE DETAILS.
6. SEE STRUCTURAL DETAILS SD-1 FOR PORCH SUPPORT DETAILS.
7. REMOVAL OF EXISTING BITUMINOUS CONCRETE SIDEWALK AND EXISTING ISLAND SHALL BE PAID UNDER ITEM 203.15 COMMON EXCAVATION.
8. SEE VTRANS STD DRAWINGS C-2A AND C-2B FOR DRIVEWAY CROSSING DETAILS.
9. SEE VTRANS STD DRAWINGS C-3A AND C-3B FOR SIDEWALK RAMP DETAILS.
10. AN ESTIMATED QUANTITY FOR ADJUSTING ELEVATION OF DRAINAGE CATCH BASINS AND MANHOLES HAS BEEN INCLUDED. THIS PAY ITEM SHALL ONLY BE USED FOR CB'S & MH'S INSTALLED IN AREAS THAT ARE TEMPORARILY PAVED TO MAINTAIN VEHICULAR TRAFFIC. ADJUSTMENT OF CB'S & MH'S IN LAWN AREAS OR OTHER AREAS THAT ARE OUTSIDE OF VEHICULAR TRAFFIC WILL BE PAID INCIDENTAL TO CATCH BASIN AND MANHOLE ITEMS.

616.20 – GRANITE SLOPE EDGING
STA. 2+012.1 TO 2+017.0, LT
STA. 4+020.5 TO 4+035.0, RT
STA. 4+020.8 TO 4+035.0, LT
STA. 5+017.1 TO 5+022.0, RT

616.21 – VERTICAL GRANITE CURB
STA. 2+011.8 TO 2+017.0, RT PARK
STA. 4+014.0 TO 4+019.4, LT PEACHAM
STA. 5+017.1 TO 5+022.0, LT SMITH
STA. 19+070.0 TO 19+075.4, RT
STA. 19+070.0 TO 19+075.4, RT P. LOT
STA. 19+070.0 TO 19+078.7, RT P. LOT
STA. 19+070.0 TO 19+087.0, LT
STA. 19+081.0 TO 19+083.5, RT P. LOT
STA. 19+082.4 TO 19+083.5, RT P. LOT
STA. 19+082.5 TO 19+114.7, RT
STA. 19+101.3 TO 19+114.8, RT ISLAND

616.21 – VERTICAL GRANITE CURB
STA. 19+090.7 TO 19+096.5, LT
STA. 19+103.8 TO 19+115.5, LT
STA. 19+116.2 TO 19+120.9, RT
STA. 19+117.0 TO 19+125.4, LT
STA. 19+117.0 TO 19+120.0, RT ISLAND
STA. 19+132.6 TO 19+169.9, RT
STA. 19+133.5 TO 19+160.0, RT ISLAND
STA. 19+135.0 TO 19+165.3, LT
STA. 19+135.0 TO 19+144.8, LT
STA. 19+135.0 TO 19+148.7, LT ISLAND
STA. 19+184.8 TO 19+186.2, RT ISLAND
STA. 19+185.2 TO 19+186.1, LT ISLAND
STA. 19+188.0 TO 19+222.2, RT
STA. 19+188.5 TO 19+209.8, RT ISLAND
STA. 19+188.6 TO 19+199.5, LT ISLAND
STA. 19+211.5 TO 19+220.9, LT
STA. 19+227.9 TO 19+256.9, RT
STA. 19+232.4 TO 19+260.0, LT

618.10 – PORTLAND CEMENT CONCRETE SIDEWALK, 125MM
STA. 19+070.0 TO 19+096.5, LT
STA. 19+103.8 TO 19+125.6, LT
STA. 19+114.6 TO 19+117.2, RT, ISLAND
STA. 19+115.5 TO 19+117.2, LT, INDIV. WALK
STA. 19+115.1 TO 19+117.4, LT, INDIV. WALK
STA. 19+134.9 TO 19+167.5, LT
STA. 19+070.0 TO 19+075.5, RT
STA. 19+082.5 TO 19+122.5, RT
STA. 19+073.4 TO 19+089.7, RT, INDIV. WALK
STA. 19+131.4 TO 19+170.6, RT
STA. 19+181.9 TO 19+222.2, RT
STA. 19+186.1 TO 19+188.6, LT, ISLAND
STA. 19+186.2 TO 19+188.5, RT, ISLAND
STA. 19+209.9 TO 19+260.0, LT
STA. 19+211.7 TO 19+213.6, LT, INDIV. WALK
STA. 5+015.5 TO 5+022.0, LT
STA. 2+013.7 TO 2+017.0, RT

618.11 – PORTLAND CEMENT CONCRETE SIDEWALK, 200MM
STA. 19+096.5 TO 19+103.8, LT
STA. 19+125.6 TO 19+134.9, LT
STA. 19+075.5 TO 19+082.5, RT
STA. 4+021.2 TO 4+035.0, LT

900.620 – SPECIAL PROVISION (PORCH SUPPORT) – SEE NOTE 6
STA. 19+235.0 TO 19+250.0, 7.2m RT. 0.3m WIDE

900.645 – SPECIAL PROVISION (REMOVE AND RELOCATE STONE WALL)
STA. 19+086.0 TO 19+090.5, LT (REMOVE)
STA. 19+093.0, LT (RELOCATE)

900.675 – SPECIAL PROVISION (STAMPED CONCRETE ISLAND, 125mm)
STA. 19+135.0 TO 19+148.7, LT
STA. 19+185.2 TO 19+199.5, LT

210.10 – COLD PLANING, BITUMINOUS PAVEMENT
STA. 3+020.00 TO 3+028.00

DATUM
VERTICAL NAVD88
HORIZONTAL NAD83(92)

REPLACEMENT SHEETS ISSUED 02/24/2012

0 10 20
SCALE 1:250

Stantec

STA 19+070 TO 19+260

PROJECT NAME: DANVILLE
PROJECT NUMBER: F EGC 028-3(32)

FILE NAME: ...\PlotFiles\029 all05.ptf
DESIGN SUPERVISOR: GARY SANTY
DESIGNED BY: STANTEC
CONSTRUCTION PLAN CP-5
PLOT DATE: 2/24/2012
DRAWN BY: STANTEC
CHECKED BY: STANTEC
SHEET 66 OF 306

2/24/2012 4:30:09 PM V:\1953\active\195310033.0092\Revised Plans\PlotFiles\029 all05.ptf

MATCH LINE – STA. 2+017 SEE SHEET CP-5

MATCH LINE – STA. 4+035 SEE SHEET CP-5

MATCH LINE – STA. 5+022 SEE SHEET CP-5

620.55 REMOVING AND RESETTING FENCE
STA. 5+023.3 TO 5+025.5, LT
STA. 5+032.6 TO 5+054.8, LT

620.50 REMOVAL OF EXISTING FENCE
STA. 5+054.8 TO 5+057.4, LT

203.28 EXCAVATION OF SURFACES AND PAVEMENTS
STA. 5+011.5 TO 5+082.5, RT.
(REMOVE EXISTING BRAINARD ST.)

616.20 – GRANITE SLOPE EDGING
STA. 2+017.0 TO 2+045.4, LT PARK
STA. 2+046.9 TO 2+139.1, LT PARK
STA. 2+152.7 TO 5+078.5, LT-RT PARK/SMITH
STA. 4+035.0 TO 4+055.3, LT PEACHAM
STA. 4+035.0 TO 4+055.3, RT PEACHAM
STA. 4+056.8 TO 4+100.3, LT PEACHAM
STA. 4+056.8 TO 4+099.5, RT PEACHAM
STA. 5+022.0 TO 5+070.4, RT SMITH

HIGH POINT
STA=2+048.64
ELEV=434.53

ABANDON PORTIONS OF EXIST. SMITH ST. AND BRAINARD ST. REMOVE EXIST. BITUMINOUS CONC. REPLACE WITH 100 mm TOPSOIL, SEED, MULCH, AND FERTILIZE PER EPSC DETAIL SHEET EDS-3.

SEE DETAIL ON TYPICAL SECTION TS-4 SMITH STREET - GREEN ACCESS

HIGH POINT
STA=4+087.67
ELEV=433.85

PARK STREET STA 2+145.691 = PEACHAM ROAD STA 4+106.333

PEACHAM ROAD STA 4+123.840
BEGIN APPROACH CONSTRUCTION

PEACHAM ROAD STA 4+131.840
END APPROACH CONSTRUCTION

PARK STREET STA 2+200.430 = SMITH STREET STA 5+115.963

PARK STREET STA 2+236.600
BEGIN APPROACH CONSTRUCTION
PARK STREET STA 2+244.600
END APPROACH CONSTRUCTION

210.10 – COLD PLANING, BITUMINOUS PAVEMENT
STA. 2+236.60 TO 2+244.60
STA. 4+123.84 TO 4+131.84

617.10 – RELOCATE MAILBOX, SINGLE SUPPORT
STA. 2+163.9, RT.
STA. 5+035.0, LT.

CONSTRUCT DRIVE – SEE NOTES 5 & 6

STATION	LOCATION	TYPE	WIDTH	RAMP
2+076.8	RT	GRAV. RES	4.4 m	TYPE 2
2+096.7	RT	GRAV. COM	9.3 m	TYPE 2
2+119.5	RT	GRAV. RES	2.6 m	TYPE 2
2+184.2	RT	GRAV. COM	26.6 m	TYPE 2
2+224.7	RT	BIT. RES	4.7 m	-
5+024.1	LT	GRAV. RES	3.7 m	TYPE 7
5+074.2	RT	BIT. COM	14.9 m	-
5+060.7	LT	GRAV. COM	4.9 m	TYPE 7

618.30 – DETECTABLE WARNING SURFACES SEE NOTE 7

STATION	RAMP
STA. 2+139.8, RT	TYPE 6
STA. 2+151.8, RT	TYPE 6
STA. 2+210.9, RT	TYPE 6
STA. 2+211.1, LT	-
STA. 4+101.7, RT	TYPE 1

DATUM
VERTICAL NAVD88
HORIZONTAL NAD83(92)

REPLACEMENT SHEETS ISSUED 02/24/2012

SCALE 1:250

616.21 – VERTICAL GRANITE CURB
STA. 2+017.0 TO 2+045.4, RT PARK
STA. 2+046.9 TO 2+074.5, RT PARK
STA. 2+078.9 TO 2+092.8, RT PARK
STA. 2+103.2 TO 2+118.2, RT PARK
STA. 2+120.9 TO 2+139.4, RT PARK
STA. 2+152.3 TO 2+171.3, RT PARK
STA. 2+197.6 TO 2+210.0, RT PARK
STA. 2+211.8 TO 2+225.6, LT PARK
STA. 5+022.0 TO 5+022.4, LT SMITH
STA. 5+025.9 TO 5+058.7, LT SMITH
STA. 5+063.1 TO 5+091.0, LT SMITH
STA. 5+091.0 TO 5+112.5, LT SMITH

ITEM 618.10 – PORTLAND CEMENT CONCRETE SIDEWALK, 125MM
STA. 2+017.0 TO 2+092.8, RT
STA. 2+045.4 TO 2+046.9, RT, INDIV. WALK
STA. 2+063.4 TO 2+065.0, RT, INDIV. WALK
STA. 2+070.8 TO 2+071.6, RT, INDIV. WALK
STA. 2+081.6 TO 2+082.7, RT, INDIV. WALK
STA. 2+088.2 TO 2+091.2, RT, INDIV. WALK
STA. 2+102.6 TO 2+106.4, RT, INDIV. WALK
STA. 2+103.2 TO 2+140.8, RT
STA. 2+127.6 TO 2+128.8, RT, INDIV. WALK
STA. 2+150.8 TO 2+171.3, RT
STA. 2+163.6 TO 2+166.3, RT, INDIV. WALK
STA. 2+197.6 TO 2+211.7, RT
STA. 2+208.2 TO 2+209.1, RT, INDIV. WALK
STA. 5+022.0 TO 5+058.7, LT
STA. 5+051.2 TO 5+052.3, LT, INDIV. WALK
STA. 5+063.1 TO 5+112.5, LT
STA. 5+082.6 TO 5+089.3, LT, INDIV. WALK

ITEM 618.11 – PORTLAND CEMENT CONCRETE SIDEWALK, 200MM
STA. 2+092.8 TO 2+103.2, RT PARK
STA. 2+171.3 TO 2+197.6, RT PARK
STA. 4+035.0 TO 4+101.7, LT PEACHAM
STA. 5+058.7 TO 5+063.1, LT SMITH

NOTES:

1. SEE ALIGNMENT/CURBLINE PLAN ALC-6 FOR SIDE ROAD GEOMETRIC DATA.
2. SEE CONSTRUCTION PLAN CP-6A FOR DRAINAGE NOTES.
3. SEE CONSTRUCTION PLAN CP-1 FOR DRAINAGE LEGEND.
4. PROPOSED UNDERGROUND UTILITIES SHOWN IN GREY. SEE UTILITY PLANS FOR UNDERGROUND UTILITY DATA.
5. ALL DRIVES SHALL BE PAVED TO 3M BEHIND THE SIDEWALK OR AS SHOWN ON THE PLANS. SEE SHEET DRD-1 FOR CONST. DRIVE DETAILS.
6. SEE VTRANS STD DRAWINGS C-2A AND C-2B FOR DRIVEWAY CROSSING DETAILS.
7. SEE VTRANS STD DRAWINGS C-3A AND C-3B FOR SIDEWALK RAMP DETAILS.
8. AN ESTIMATED QUANTITY FOR ADJUSTING ELEVATION OF DRAINAGE CATCH BASINS AND MANHOLES HAS BEEN INCLUDED. THIS PAY ITEM SHALL ONLY BE USED FOR CB'S & MH'S INSTALLED IN AREAS THAT ARE TEMPORARILY PAVED TO MAINTAIN VEHICULAR TRAFFIC. ADJUSTMENT OF CB'S & MH'S IN LAWN AREAS OR OTHER AREAS THAT ARE OUTSIDE OF VEHICULAR TRAFFIC WILL BE PAID INCIDENTAL TO CATCH BASIN AND MANHOLE ITEMS.

N
VT STATE PLANE GRID

VTrans Metric

Stantec

PROJECT NAME:	DANVILLE
PROJECT NUMBER:	F EGC 028-3(32)
FILE NAME: ...\PlotFiles\030 dl106.ptf	PLOT DATE: 2/24/2012
DESIGN SUPERVISOR: GARY SANTY	DRAWN BY: STANTEC
DESIGNED BY: STANTEC	CHECKED BY: STANTEC
CONSTRUCTION PLAN CP-6	SHEET 67 OF 306

2/24/2012 4:30:10 PM V:\1953\active\195300033_I092\Revised Plans\PlotFiles\030 dl106.ptf

DRAINAGE STRUCTURES
CONST. PLAN 5

STRUCTURE NO.	CONSTRUCTION ℄ STATION	COMMENTS
CB209	5+015.0, LT SMITH ST	PRCCB W/D GRATE, 6" SUMP
CB210	5+015.0, RT SMITH ST	PRCCB W/D GRATE, 6" SUMP
CB224	19+231.0, LT	1.5 ID PRCCB W/E GRATE, 6" SUMP
CB225	19+210.0, LT	PRCCB W/E GRATE, 6" SUMP
CB227	19+215.0, RT	PRCCB W/E GRATE, 6" SUMP
CB228	4+015.0, LT PEACHAM	PRCCB W/D GRATE, 6" SUMP
CB228A	19+197.0, RT	PRCCB W/E GRATE, 6" SUMP
CB229	4+023.0, RT PEACHAM	PRCCB W/D GRATE, 6" SUMP
CB232	19+159.0, RT	PRCCB W/E GRATE, 6" SUMP
CB232A	19+136.0, RT	PRCCB W/E GRATE, 6" SUMP
CB234	19+163.0, LT	PRCCB W/E GRATE, 6" SUMP
CB234A	19+185.7, LT	PRCCB W/E GRATE, 6" SUMP
CB235	19+147.5, LT	PRCCB W/E GRATE, 6" SUMP
CB236	2+015.0, LT	PRCCB W/D GRATE, 6" SUMP
CB237	2+015.0, RT	PRCCB W/D GRATE, 6" SUMP
CB238	19+113.0, RT	PRCCB W/E GRATE, 6" SUMP
CB239	19+113.0, LT	PRCCB W/E GRATE, 6" SUMP
CB240A	19+085.0, RT	PRCCB W/D GRATE, NO SUMP
CB240B	19+085.0, RT.	PRCCB W/E GRATE, 6" SUMP

DRAINAGE NOTES
CONST. PLAN 5

(209) CONST. ℄ 5+015.0 LT. TO 19+231.0 LT.
NEW 450 mm x 18.3m PIPE OPTION 2

(210) CONST. ℄ 5+015.0 RT. TO LT.
NEW 450mm x 4.3m PIPE OPTION 2

(224) CONST. ℄ 19+231.0 TO 19+285.0 LT.
NEW 750mm x 52.5m PIPE OPTION 2

(225) CONST. ℄ 19+210.0 TO 19+231.0 LT.
NEW 600mm x 19.5m PIPE OPTION 1

(227) CONST. ℄ 19+215.0 TO 5+015.0 RT.
NEW 450mm x 8.0m PIPE OPTION 2

(228) CONST. ℄ 4+015.0 LT. TO 19+197.0 RT.
NEW 450mm x 12.0m PIPE OPTION 2

(228A) CONST. ℄ 19+197.0 TO 19+215.0 RT.
NEW 450mm x 17.5m PIPE OPTION 1

(229) CONST. ℄ 4+023.0 RT. TO 4+015.0 LT.
NEW 450mm x 15.0m PIPE OPTION 2

(230) CONST. ℄ 4+023.0 RT TO 4+040.0 RT
NEW 450mm x 15.8m PIPE OPTION 3

(232) CONST. ℄ 19+159.0 RT. TO 4+023.0 RT.
NEW 450mm x 17.8m PIPE OPTION 1

(232A) CONST. ℄ 19+136.0 TO 19+159.0 RT.
NEW 450mm x 22.5m PIPE OPTION 1

(233) CONST. ℄ 19+185.7 LT. TO 19+210.0 LT.
NEW 600mm x 22.8m PIPE OPTION 1

(234) CONST. ℄ 19+163.0 LT. TO 19+185.7 LT.
NEW 600mm x 21.1m PIPE OPTION 1

(235) CONST. ℄ 19+147.5 TO 19+163.0 LT.
NEW 600mm x 14.2m PIPE OPTION 1

(236) CONST. ℄ 2+015.0 LT. TO 19+136.0 RT.
NEW 450mm x 7.7m PIPE OPTION 3

(237) CONST. ℄ 2+015.0 RT. TO LT.
NEW 450mm x 6.4m PIPE OPTION 2

(238) CONST. ℄ 19+113.0 RT. TO 19+113.0 RT.
NEW 450mm x 10.8m PIPE OPTION 3

(239) CONST. ℄ 19+085.0 LT. TO 19+113.0, LT
NEW 600mm x 26.4m PIPE OPTION 1

(239A) CONST. ℄ 19+113.0 LT. TO 19+147.5, LT.
NEW 600mm x 32.8m PIPE OPTION 1

(240A) CONST. ℄ 19+085.0 RT. TO LT.
NEW 450mm x 8.9m PIPE OPTION 2

(EX407) CONST. ℄ 19+123.5 LT. TO 19+170.5 RT.
REMOVE EXISTING 460 mm CGMP & INLET STRUCTURE

(EX408) CONST. ℄ 19+170.5 RT. TO 19+221.9 RT
REMOVE EXISTING 460 mm CGMP & INLET STRUCTURE

(EX409) CONST. ℄ 19+221.0 RT.
REMOVE INLET STRUCTURE

(EX410) CONST. ℄ 19+222.7 RT. TO 19+221.0 RT
REMOVE EXISTING 460 mm CGMP & INLET STRUCTURE

(EX411) CONST. ℄ 19+230.0 TO 19+301.3 RT.
REMOVE EXISTING 310 mm CGMP & INLET STRUCTURE

(DC) CONST. ℄ 19+197.2 TO 19+197.0 RT.
NEW 100mm x 7.0m PVC
DANVILLE CIRCLE TO CB 228A
SEE DETAIL 6 ON SHEET LND-1 FOR MORE INFO.

UNDERDRAIN NOTES
CONST. PLAN 5

(U 235) CONST. ℄ 19+147.5 TO 19+163.0 LT.
NEW 150mm x 15.0m UND. W/URBAN FLUSHING
BASIN IN STRUCTURE #235

(U 232) CONST. ℄ 19+159.0 RT. TO 4+023.0 RT.
NEW 150mm x 18.7m UND. W/URBAN FLUSHING
BASIN IN STRUCTURE #232

(U 240A) CONST. ℄ 19+085.0 TO 19+113.0 RT.
NEW 150mm x 28.8m UND. W/URBAN FLUSHING
BASIN IN STRUCTURE #240A

(U 239) CONST. ℄ 19+113.0 TO 19+147.5 LT.
NEW 150mm x 33.7m UND. W/URBAN FLUSHING
BASIN IN STRUCTURE #239

(U 238) CONST. ℄ 19+113.0 RT. TO 2+015.0 RT.
NEW 150mm x 13.1m UND. W/URBAN FLUSHING
BASIN IN STRUCTURE #238

(U 236) CONST. ℄ 19+136.0 RT. TO 2+015.0 LT.
NEW 150mm x 8.6m UND. W/URBAN FLUSHING
BASIN IN STRUCTURE #236

(U 232A) CONST. ℄ 19+136.0 TO 19+159.0 RT.
NEW 150mm x 23.9m UND. W/URBAN FLUSHING
BASIN IN STRUCTURE #232A

(U 228A) CONST. ℄ 19+197.0 TO 19+215.0 RT.
NEW 150mm x 18.5m UND. W/URBAN FLUSHING
BASIN IN STRUCTURE#228A

(U 225) CONST. ℄ 19+210.0 TO 19+231.0 LT.
NEW 150mm x 20.3m UND. W/URBAN FLUSHING
BASIN IN STRUCTURE #225

(U 227) CONST. ℄ 19+215.0 RT. TO SMITH ST. 5+015.0 RT.
NEW 150mm x 9.4m UND. W/URBAN FLUSHING
BASIN IN STRUCTURE #227
CONST. PIPE @ -0.50% GRADE @ 5+013.2 - 5+015.0 RT

(U 224) CONST. ℄ 19+231.0 TO 19+285.0 LT.
NEW 150mm x 53.0m UND. W/URBAN FLUSHING
BASIN IN STRUCTURE #224

(U 208) CONST. ℄ 19+230.5 TO 19+285.0 RT.
NEW 150mm x 54.2m UND. W/URBAN FLUSHING
BASIN IN STRUCTURE #208

(U 231) CONST. ℄ 4+015.0 TO 4+040.0 LT.
NEW 150mm x 26.3m UND. W/URBAN FLUSHING
BASIN IN STRUCTURE #231

(U 230) CONST. ℄ 4+023.0 TO 4+040.0 RT.
NEW 150mm x 17.2m UND. W/URBAN FLUSHING
BASIN IN STRUCTURE #230

DRAINAGE STRUCTURES
CONST. PLAN 6

STRUCTURE NO.	CONSTRUCTION ℄ STATION	COMMENTS
CB211	5+070.0, LT	PRCCB W/E GRATE
CB212	5+070.0, RT	PRCCB W/E GRATE
CB213	5+089.0, LT	PRCCB W/E GRATE
CB214	5+110.6, LT	PRCCB W/D GRATE
CB215	2+224.8, LT	PRCCB W/D GRATE
CB216	2+208.0, RT	PRCCB W/D GRATE, NO SUMP
CB217	2+190.0, LT	PRCCB W/D GRATE
CB218	2+157.0, LT	PRCCB W/D GRATE
CB220	2+135.0, LT	PRCCB W/D GRATE
CB221	2+135.0, RT	PRCCB W/D GRATE, NO SUMP
CB222	2+105.0, LT	PRCCB W/D GRATE, NO SUMP
CB223	2+105.0, RT	PRCCB W/D GRATE, NO SUMP
CB230	4+040.0, RT	PRCCB W/E GRATE
CB231	4+040.0, LT	PRCCB W/E GRATE

DRAINAGE NOTES
CONST. PLAN 6

(211) CONST. ℄ 5+015.0 TO 5+070.0 LT.
NEW 450mm x 54.4m PIPE OPTION 2

(212) CONST. ℄ 5+070.0 RT. TO LT.
NEW 450mm x 5.7m PIPE OPTION 2

(213) CONST. ℄ 5+070.0 TO 5+089.0 LT.
NEW 450mm x 17.8m PIPE OPTION 3

(214) CONST. ℄ 5+089.0 TO 5+110.6 LT.
NEW 450mm x 20.6m PIPE OPTION 3

(215) CONST. ℄ 2+224.8 LT. TO 5+110.6 LT.
NEW 450mm x 19.6m PIPE OPTION 3

(216) CONST. ℄ 2+208.0 RT. TO 5+110.6 LT.
NEW 450mm x 7.9m PIPE OPTION 2

(217) CONST. ℄ 2+190.0 LT. TO 5+110.6 LT.
NEW 450mm x 14.3m PIPE OPTION 2

(218) CONST. ℄ 2+157.0 TO 2+190.0 LT.
NEW 450mm x 31.6m PIPE OPTION 3

(220) CONST. ℄ 2+135.0 TO 2+157.0 LT.
NEW 450mm x 20.8m PIPE OPTION 2

(221) CONST. ℄ 2+135.0 RT. TO LT.
NEW 450mm x 6.3m PIPE OPTION 2

(222) CONST. ℄ 2+105.0 TO 2+135.0 LT.
NEW 450mm x 26.5m PIPE OPTION 3

(223) CONST. ℄ 2+105.0 RT. TO LT.
NEW 450mm x 6.3m PIPE OPTION 2

(231) CONST. ℄ 4+040.0 LT. TO RT.
NEW 450mm x 5.7m PIPE OPTION 2

UNDERDRAIN NOTES
CONST. PLAN 6

(U 236A) CONST. ℄ 2+015.0 TO 2+048.0 LT.
NEW 150mm x 32.7m UND. W/RURAL FLUSHING
BASIN @ 2+048.0 LT

(U 223A) CONST. ℄ 2+049.2 TO 2+105.0 RT.
NEW 150mm x 61.2m UND. W/RURAL FLUSHING
BASIN @ 2+049.0 RT

(U 222A) CONST. ℄ 2+049.2 TO 2+105.0 LT.
NEW 150mm x 60.2m UND. W/RURAL FLUSHING
BASIN @ 2+049.0 LT

(U 223) CONST. ℄ 2+105.0 TO 2+135.0 RT.
NEW 150mm x 32.3m UND. W/URBAN FLUSHING
BASIN IN STRUCTURE #223

(U 222) CONST. ℄ 2+105.0 TO 2+135.0 LT.
NEW 150mm x 30.0m UND. W/URBAN FLUSHING
BASIN IN STRUCTURE #222

(U 221) CONST. ℄ 2+135.0 TO 2+208.0 RT.
NEW 150mm x 73.1m UND. W/URBAN FLUSHING
BASIN IN STRUCTURE #221

(U 218) CONST. ℄ 2+157.0 TO 2+190.0 LT.
NEW 150mm x 32.9m UND. W/URBAN FLUSHING
BASIN IN STRUCTURE #218

(U 215) CONST. ℄ 2+224.8 LT. TO 5+110.8 LT.
NEW 150mm x 20.6m UND. W/URBAN FLUSHING
BASIN IN STRUCTURE #215

(U 230A) CONST. ℄ 4+040.0 TO 4+088.0 RT.
NEW 150mm x 47.0m UND. W/RURAL
FLUSHING BASIN @ 4+088.0 RT

(U 231A) CONST. ℄ 4+040.0 TO 4+088.0 LT.
NEW 150mm x 47.7m UND. W/RURAL
FLUSHING BASIN @ 4+088.0 LT

(U 220) CONST. ℄ 4+088.0 RT. TO 2+135.0 LT.
NEW 150mm x 17.7m UND. W/RURAL
FLUSHING BASIN @ 4+089.0 RT

(U 218A) CONST. ℄ 4+088.0 LT. TO 2+157.0 LT.
NEW 150mm x 18.7m UND. W/RURAL
FLUSHING BASIN @ 4+089.0 LT

(U 212) CONST. ℄ 5+015.0 TO 5+070.0 RT.
NEW 150mm x 55.8m UND. W/URBAN FLUSHING
BASIN IN STRUCTURE #212
CONST. PIPE @ +0.50% GRADE @ 5+015.0 - 5+027.4 RT

(U 211) CONST. ℄ 5+015.0 TO 5+070.0 LT.
NEW 150mm x 55.8m UND. W/URBAN FLUSHING
BASIN IN STRUCTURE #211
CONST. PIPE @ +0.50% GRADE @ 5+015.0 - 5+024.4 LT

(U 213) CONST. ℄ 5+070.0 TO 5+089.0 LT.
NEW 150mm x 19.0m UND. W/URBAN FLUSHING
BASIN IN STRUCTURE #213

(U 214) CONST. ℄ 5+089.0 TO 5+110.8 LT.
NEW 150mm x 21.3m UND. W/URBAN FLUSHING
BASIN IN STRUCTURE #214

(U 237) CONST. ℄ 2+015.0 TO 2+048.0 RT
NEW 150mm x 34.5m UND. W/RURAL FLUSHING
BASIN @ 2+048.0 RT.

(U 217) CONST. ℄ 2+190.0 LT. TO 5+070.0 RT.
NEW 150mm x 46.0m UND. W/URBAN FLUSHING
BASIN IN STRUCTURE #217

REPLACEMENT SHEETS ISSUED 10/05/11

Stantec

PROJECT NAME: DANVILLE	
PROJECT NUMBER: F EGC 028-3(32)	
FILE NAME: ...\PlotFiles\03la06a.ptf	PLOT DATE: 10/4/2011
DESIGN SUPERVISOR: GARY SANTY	DRAWN BY: STANTEC
DESIGNED BY: STANTEC	CHECKED BY: STANTEC
CONSTRUCTION PLAN CP-6A	SHEET 68 OF 306

10/4/2011 11:42:24 PM V:\19531\active\85310033_0192\Revised Plans\PlotFiles\03la06a.ptf

616.21 – VERTICAL GRANITE CURB
STA. 19+260.0 TO 19+262.1, LT
STA. 19+260.2 TO 19+332.0, RT
STA. 19+270.1 TO 19+343.2, LT
STA. 19+341.0 TO 19+379.0, RT
STA. 19+363.7 TO 19+424.5, LT
STA. 19+390.6 TO 19+428.6, RT
STA. 19+440.1 TO 19+450.0, RT
STA. 19+447.5 TO 19+450.0, LT

618.10 – PORTLAND CEMENT CONCRETE SIDEWALK, 125MM
STA. 19+260.0 TO 19+343.2, LT
STA. 19+331.5 TO 19+332.3, LT, INDIV. WALK
STA. 19+352.2 TO 19+354.9, LT
STA. 19+363.7 TO 19+427.7, LT
STA. 19+443.3 TO 19+450.0, LT

618.11 – PORTLAND CEMENT CONCRETE SIDEWALK, 200MM
STA. 19+343.2 TO 19+352.2, LT
STA. 19+354.9 TO 19+363.7, LT

618.30 – DETECTABLE WARNING SURFACES – SEE NOTE 6

STATION	RAMP
STA. 19+425.7, LT	TYPE I
STA. 19+445.9, LT	TYPE I

900.675 SPECIAL PROVISION (PRECAST CONCRETE GRAVITY RETAINING WALL) SEE NOTE 4
STA. 19+290.8 TO 19+320.2, 6.2m LT

617.10 RELOCATE MAIL BOX SINGLE SUPPORT
STA. 19+342.0, RT.

613.11 – STONE FILL, TYPE II –SEE NOTE 3
STA. 19+421.5, RT

CONSTRUCT DRIVE–SEE NOTES 2 & 5

STATION	LOCATION	TYPE	WIDTH	RAMP
19+266.1	LT	BIT. RES.	3.0 m	-
19+336.6	RT	BIT. RES.	4.2 m	TYPE 2
19+347.4	LT	GRAV.COM.	4.3 m	TYPE 2, -
19+359.3	LT	GRAV.COM.	4.1 m	-, TYPE 2
19+384.8	RT	GRAV.RES.	7.2 m	-

NOTE:
1. SEE CONSTRUCTION PLAN CP-1 FOR DRAINAGE LEGEND.
2. ALL DRIVES SHALL BE PAVED TO 3M BEHIND THE SIDEWALK OR AS SHOWN ON THE PLANS. SEE SHEET DRD-1 FOR CONST. DRIVE DETAILS.
3. SEE DRAINAGE DETAIL SHEET DD-1 FOR STORM DRAIN OUTLET PROTECTION DETAIL AND DIMENSIONS.
4. SEE STRUCTURAL DETAILS SD-1 SHEET FOR PRECAST CONCRETE GRAVITY RETAINING WALL DETAILS.
5. SEE VTRANS STD DRAWINGS C-2A AND C-2B FOR DRIVEWAY CROSSING DETAILS.
6. SEE VTRANS STD DRAWINGS C-3A AND C-3B FOR SIDEWALK RAMP DETAILS.
7. AN ESTIMATED QUANTITY FOR ADJUSTING ELEVATION OF DRAINAGE CATCH BASINS AND MANHOLES HAS BEEN INCLUDED. THIS PAY ITEM SHALL ONLY BE USED FOR CB'S & MH'S INSTALLED IN AREAS THAT ARE TEMPORARILY PAVED TO MAINTAIN VEHICULAR TRAFFIC. ADJUSTMENT OF CB'S & MH'S IN LAWN AREAS OR OTHER AREAS THAT ARE OUTSIDE OF VEHICULAR TRAFFIC WILL BE PAID INCIDENTAL TO CATCH BASIN AND MANHOLE ITEMS.

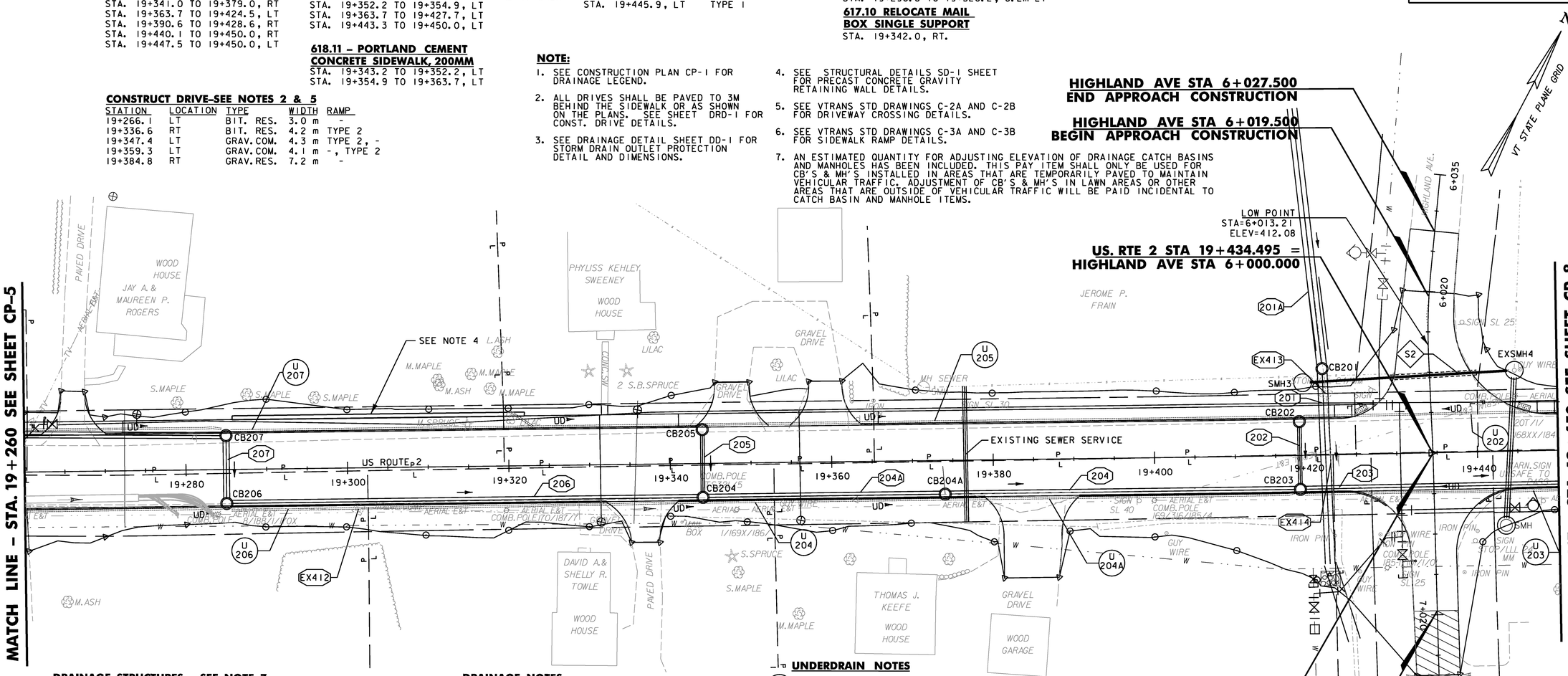

DRAINAGE STRUCTURES – SEE NOTE 7

STRUCTURE NO.	CONSTRUCTION ℄ STATION	COMMENTS
CB201	19+421.5, LT	1.8 ID PRCCB W/E GRATE
CB202	19+418.0, LT	PRCCB W/E GRATE
CB203	19+418.0, RT	1.5 ID PRCCB W/E GRATE
CB204	19+344.0, RT	1.5 ID PRCCB W/E GRATE
CB204A	19+374.0, RT.	1.5 ID PRCCB W/E GRATE
CB205	19+344.0, LT	PRCCB W/E GRATE
CB206	19+285.0, RT	1.5 ID PRCCB W/E GRATE
CB207	19+285.0, LT	1.5 ID PRCCB W/E GRATE
SMH3	19+418.5, LT	NEW SEWER MH INVERT IN = 410.78 (MATCH EXISTING INVERT ELEVATION) INVERT OUT = 409.44
EXSMH4	19+444.8, LT	REMOVE OUTSIDE DROP INVERT IN = 409.31

SEWER NOTES
S2 ◇ ℄ 19+418.5 LT. TO 19+444.8 LT.
NEW 200mm x 26.0m PVC SEWER @ 0.50% W/ 600mm SLEEVE
INVERT IN = 409.44
INVERT OUT = 409.31

DRAINAGE NOTES
201 ℄ 19+421.5 LT. TO RT.
NEW 1200mm x 23.6m PIPE OPTION 4
CONST. 1.5m WIDE x 10m OUTLET DITCH
CONST. STONE FILL, TYPE II AT OUTLET, SEE NOTE 3
INSTALL END SECTION
201A ℄ 19+421.5 LT.
NEW 1200mm x 31.8m PIPE OPTION 4
REPLACE EXISTING 600mm PIPE AND HEADWALL
202 ℄ 19+418.0 LT. TO RT.
NEW 450mm x 7.2m PIPE OPTION 2
203 ℄ 19+418.0 RT. TO 19+463.0 RT.
NEW 750mm x 43.8m PIPE OPTION 3
204 ℄ 19+374.0 RT. TO 19+418.0 RT.
NEW 750mm x 42.8m PIPE OPTION 2
204A ℄ 19+344.0 RT. TO 19+374 RT.
NEW 750mm x 28.8m PIPE OPTION 2
205 ℄ 19+344.0 LT. TO RT.
NEW 450mm x 7.2m PIPE OPTION 2
206 ℄ 19+285.0 TO 19+344.0 RT.
NEW 750mm x 57.8m PIPE OPTION 2
207 ℄ 19+285.0 LT. TO RT.
NEW 750mm x 7.2m PIPE OPTION 2
EX412 ℄ 19+301.3 RT. TO 19+392.4 RT.
REMOVE EXISTING 310 CGMP & INLET STRUCTURE
EX413 ℄ 19+421.4 LT.
REMOVE INLET STRUCTURE & EXISTING 310 CGMP TO 22m LEFT
EX414 ℄ 19+421.4 LT.
REMOVE EXISTING 600 RCP

UNDERDRAIN NOTES
U 206 ℄ 19+285.0 TO 19+344.0 RT.
NEW 150mm x 59.0m UND. W/URBAN FLUSHING BASIN IN STRUCTURE #206
U 207 ℄ 19+285.0 TO 19+344.0 LT.
NEW 150mm x 59.0m UND. W/ URBAN FLUSHING BASIN IN STRUCTURE #207
TIE IN 102mm RETAINING WALL DRAINAGE PIPE TO UNDERDRAIN
U 204 ℄ 19+344.0 TO 19+374.0 RT.
NEW 150mm x 30.0m UND. W/URBAN FLUSHING BASIN IN STRUCTURE #204
U 205 ℄ 19+344.0 TO 19+418.0 LT.
NEW 150mm x 74.0m UND. W/URBAN FLUSHING BASIN IN STRUCTURE #205
U 203 ℄ 19+418.0 TO 19+463.0 RT.
NEW 150mm x 45.0m UND. W/ URBAN FLUSHING BASIN IN STRUCTURE #203
U 202 ℄ 19+418.0 TO 19+463.0 LT.
NEW 150mm x 45.0m UND. W/URBAN FLUSHING BASIN IN STRUCTURE #202
U 204A ℄ 19+374.0 TO 19+418.0 RT.
NEW 150mm x 44.0m UND. W/URBAN FLUSHING BASIN IN STRUCTURE #204A

210.10 – COLD PLANING, BITUMINOUS PAVEMENT
STA. 7+019.50 TO 7+027.50

DATUM
VERTICAL NAVD88
HORIZONTAL NAD83(92)

0 10 20
SCALE 1:250

REPLACEMENT SHEETS ISSUED 02/24/2012

STA 19+260 TO 19+450

PROJECT NAME: DANVILLE
PROJECT NUMBER: F EGC 028-3(32)
FILE NAME: ...\PlotFiles\032 all07.ptf
DESIGN SUPERVISOR: GARY SANTY
DESIGNED BY: STANTEC
CONSTRUCTION PLAN CP-7
PLOT DATE: 2/24/2012
DRAWN BY: STANTEC
CHECKED BY: STANTEC
SHEET 69 OF 306

2/24/2012 4:49:42 PM V:\1953\active\195300033.0092\Revised Plans\PlotFiles\032 all07.ptf

616.21 – VERTICAL GRANITE CURB
STA. 19+450.0 TO 19+462.9, LT
STA. 19+450.0 TO 19+485.2, RT
STA. 19+492.0 TO 19+554.2, LT
STA. 19+493.6 TO 19+522.7, RT
STA. 19+534.3 TO 19+554.9, RT
STA. 19+566.8 TO 19+590.0, RT
STA. 19+570.2 TO 19+590.0, LT

617.10 – RELOCATE MAILBOX, SINGLE SUPPORT
STA. 19+481.5, RT
STA. 19+552.0, RT

618.10 – PORTLAND CEMENT CONCRETE SIDEWALK, 125MM
STA. 19+450.0 TO 19+475.6, LT
STA. 19+492.0 TO 19+554.2, LT
STA. 19+570.2 TO 19+590.0, LT

618.11 – PORTLAND CEMENT CONCRETE SIDEWALK, 200mm
STA. 19+475.6 TO 19+492.0, LT
STA. 19+554.2 TO 19+570.2, LT

613.11 STONE FILL TYPE II–SEE NOTE 5
STA. 19+490.0 TO 19+590, LT (STONE LINED SWALE)

CONSTRUCT DRIVE–SEE NOTES 2&3

STATION	LOCATION	TYPE	WIDTH	RAMP
19+468.1	LT	GRAV. RES.	5.8 m	TYPE 2, -
19+483.8	LT	GRAV. RES.	12.2 m	-, TYPE 2
19+489.8	RT	BIT. COM.	3.8 m	-
19+528.5	RT	BIT. COM.	7.2 m	-
19+560.7	RT	GRAV. RES.	7.2 m	-
19+562.1	LT	GRAV. RES.	12.2 m	TYPE 2

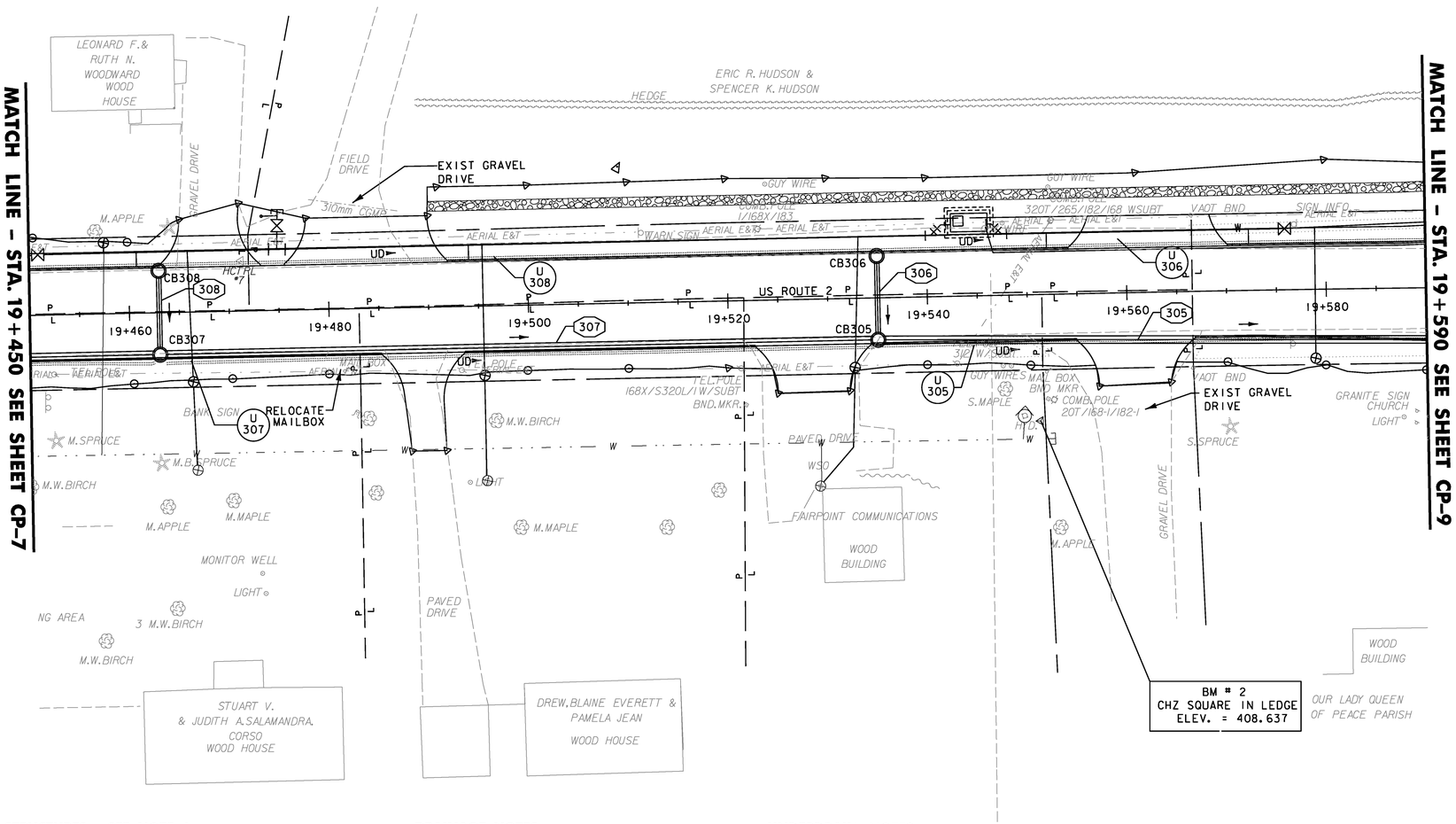

DRAINAGE STRUCTURES – SEE NOTE 6

STRUCTURE NO.	CONSTRUCTION ℄ STATION	COMMENTS
CB305	19+535.0, RT	1.5 ID PRCCB W/E GRATE
CB306	19+535.0, LT	PRCCB W/E GRATE
CB307	19+463.0, RT	1.5 ID PRCCB W/D GRATE
CB308	19+463.0, LT	PRCCB W/D GRATE

DRAINAGE NOTES
(305) CONST. ℄ 19+535.0 TO 19+605.0 RT.
NEW 750mm x 68.7m PIPE OPTION 1

(306) CONST. ℄ 19+535.0 LT. TO RT.
NEW 450mm x 7.2m PIPE OPTION 2

(307) CONST. ℄ 19+463.0 TO 19+535.0 RT.
NEW 750mm x 70.8m PIPE OPTION 1

(308) CONST. ℄ 19+463.0 LT. TO RT.
NEW 450mm x 7.2m PIPE OPTION 2

UNDERDRAIN NOTES
(U 307) CONST. ℄ 19+463.0 TO 19+535.0 RT.
NEW 150mm x 72.0m UND. W/URBAN FLUSHING BASIN IN STRUCTURE #307

(U 308) CONST. ℄ 19+463.0 TO 19+535.0 LT.
NEW 150mm x 72.0m UND. W/URBAN FLUSHING BASIN IN STRUCTURE #308

(U 305) CONST. ℄ 19+535.0 TO 19+605.0 RT.
NEW 150mm x 70.0m UND. W/URBAN FLUSHING BASIN IN STRUCTURE #305

(U 306) CONST. ℄ 19+535.0 TO 19+605.0 LT.
NEW 150mm x 70.0m UND. W/URBAN FLUSHING BASIN IN STRUCTURE #306

DATUM
VERTICAL NAVD88
HORIZONTAL NAD83(92)

REPLACEMENT SHEETS ISSUED 10/05/11

0 10 20
SCALE 1:250

NOTE:
1. SEE CONSTRUCTION PLAN CP-1 FOR DRAINAGE LEGEND.
2. ALL DRIVES SHALL BE PAVED TO 3M BEHIND THE SIDEWALK OR AS SHOWN ON THE PLANS. SEE SHEET DRD-1 FOR CONST. DRIVE DETAILS.
3. SEE VTRANS STD DRAWINGS C-2A AND C-2B FOR DRIVEWAY CROSSING DETAILS.
4. SEE VTRANS STD DRAWINGS C-3A AND C-3B FOR SIDEWALK RAMP DETAILS.
5. SEE DRAINAGE DETAIL SHEET DD-1 FOR STONE LINED SWALE DETAIL.
6. AN ESTIMATED QUANTITY FOR ADJUSTING ELEVATION OF DRAINAGE CATCH BASINS AND MANHOLES HAS BEEN INCLUDED. THIS PAY ITEM SHALL ONLY BE USED FOR CB'S & MH'S INSTALLED IN AREAS THAT ARE TEMPORARILY PAVED TO MAINTAIN VEHICULAR TRAFFIC. ADJUSTMENT OF CB'S & MH'S IN LAWN AREAS OR OTHER AREAS THAT ARE OUTSIDE OF VEHICULAR TRAFFIC WILL BE PAID INCIDENTAL TO CATCH BASIN AND MANHOLE ITEMS.

STA 19+450 TO 19+590

PROJECT NAME: DANVILLE
PROJECT NUMBER: F EGC 028-3(32)

FILE NAME: ...\PlotFiles\033 dl108.ptf
DESIGN SUPERVISOR: GARY SANTY
DESIGNED BY: STANTEC
CONSTRUCTION PLAN CP–8
PLOT DATE: 10/4/2011
DRAWN BY: STANTEC
CHECKED BY: STANTEC
SHEET 70 OF 306

10/4/2011 1:42:25 PM V:\1953\active\195300033_0092\Revised Plans\PlotFiles\033 dl108.ptf

210.10 – COLD PLANING, BIT. PAVEMENT
STA. 19+708.508 TO 19+760.000

618.10 – PORTLAND CEMENT CONCRETE SIDEWALK, 125MM
STA. 19+590.0 TO 19+760.0, LT.

CONSTRUCT DRIVE–SEE NOTES 2&3

STATION	LOCATION	TYPE	WIDTH	RAMP
19+675.0	LT	GRAV. RES.	5.6 m	TYPE 2

616.20 – GRANITE SLOPE EDGING
STA. 19+612.6 TO 19+647.4, LT. & RT., EAST GATEWAY ISLAND

616.21 – VERTICAL GRANITE CURB
STA. 19+590.0 TO 19+650.0, RT
STA. 19+590.0 TO 19+669.9, LT
STA. 19+677.8 TO 19+700.0, LT

617.10 – RELOCATE MAILBOX, SINGLE SUPPORT
STA. 19+668.6, LT.

613.10 – STONE FILL TYPE I – SEE NOTE 5
STA. 19+670.0 TO 19+760.0, RT. (STONE LINED SWALE)

613.11 – STONE FILL TYPE II–SEE NOTE 5
STA. 19+590 TO 19+667.7, LT (STONE LINED SWALE)

625.10 – SLEEVES FOR UTILITIES (1 SLEEVE X 600MM)
STA. 19+652 LT.-RT.

VAOT Metric

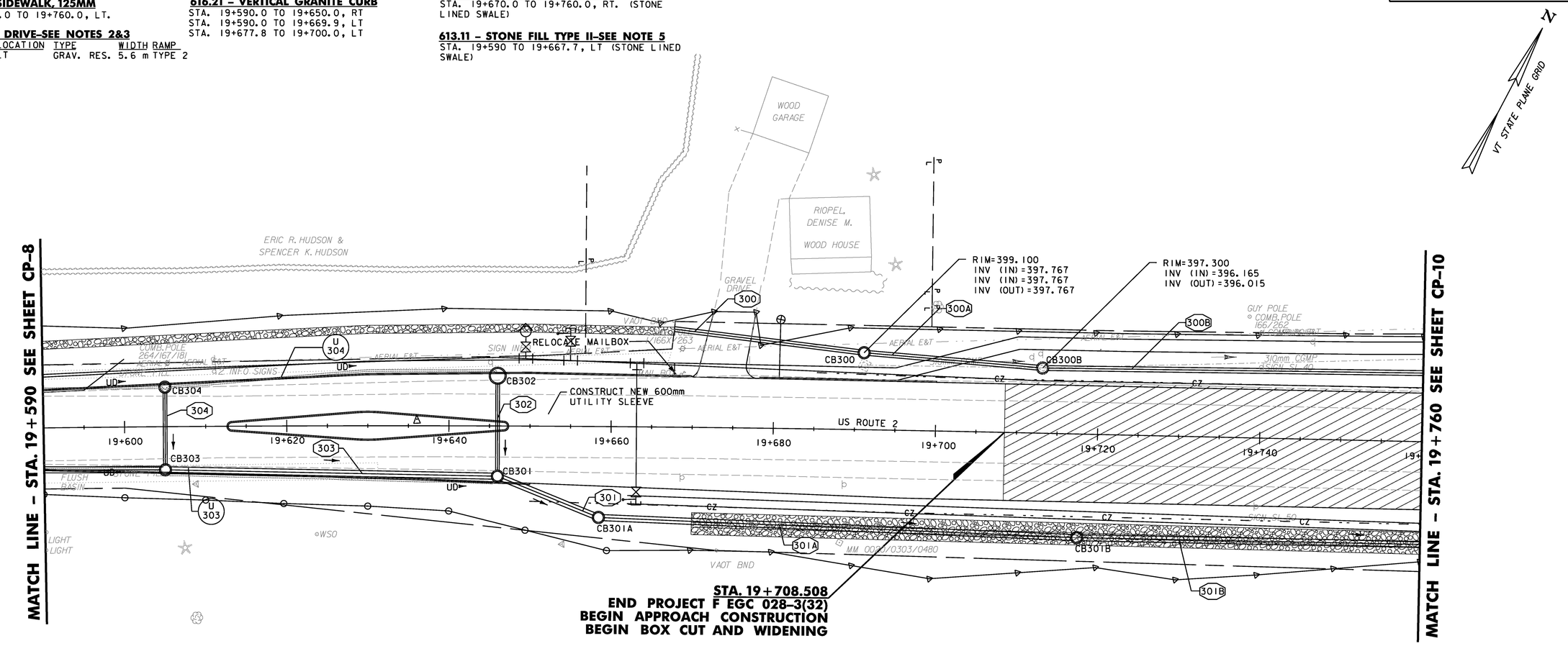

WOOD BUILDING

OUR LADY QUEEN OF PEACE PARISH

DRAINAGE STRUCTURES – SEE NOTE 5

STRUCTURE NO.	CONSTRUCTION ℄ STATION	COMMENTS
CB300	19+691.1, LT	PRCCB W/A GRATE
CB300B	19+713.0, LT	PRCCB W/B GRATE
CB301	19+646.0, RT	1.5 ID PRCCB W/E GRATE
CB301A	19+658.5, RT	1.5 ID PRCCB W/B GRATE
CB301B	19+717.7, RT	1.5 ID PRCCB W/B GRATE
CB302	19+646.0, LT	PRCCB W/E GRATE
CB303	19+605.0, RT	1.5 ID PRCCB W/E GRATE
CB304	19+605.0, LT	PRCCB W/E GRATE

DRAINAGE NOTES

(300) CONST. ℄ 19+667.8 TO 19+691.1,
NEW 600mm x 22.9 PIPE OPTION 3
CONST. STRAIGHT CONCRETE HEADWALL (REF STD D-33)

(300A) CONST. ℄ 19+691.1 TO 19+713.0 LT.
NEW 600mm x 20.9m PIPE OPTION 3

(300B) CONST. ℄ 19+713.0 TO 19+763.0 LT.
NEW 600mm x 48.8m PIPE OPTION 3

(301) CONST. ℄ 19+646.0 TO 19+658.8 RT.
NEW 750mm x 12.3m PIPE OPTION 1

(301A) CONST. ℄ 19+658.8 TO 19+717.7 RT.
NEW 750mm x 57.8m PIPE OPTION 1

(301B) CONST. ℄ 19+717.7 TO 19+781.0 RT.
NEW 750mm x 62.1m PIPE OPTION 1

(302) CONST. ℄ 19+646.0 LT. TO RT.
NEW 450mm x 10.9m PIPE OPTION 2

(303) CONST. ℄ 19+605.0 RT. TO 19+646.0 RT.
NEW 750mm x 39.8m PIPE OPTION 1

(304) CONST. ℄ 19+605.0 LT. TO RT.
NEW 450mm x 9.0m PIPE OPTION 2

UNDERDRAIN NOTES

(U 303) CONST. ℄ 19+605.0 TO 19+646.0 RT.
NEW 150 x 41.2m UND. W/URBAN FLUSHING BASIN IN STRUCTURE #303

(U 304) CONST. ℄ 19+605.0 TO 19+646.0 LT.
NEW 150 x 41.2m UND. W/URBAN FLUSHING BASIN IN STRUCTURE #304

NOTE:

1. SEE CONSTRUCTION PLAN CP-1 FOR DRAINAGE LEGEND.
2. ALL DRIVES SHALL BE PAVED TO 3M BEHIND THE SIDEWALK OR AS SHOWN ON THE PLANS SEE SHEET DRD-1 FOR CONST. DRIVE DETAILS.
3. SEE VTRANS STD DRAWINGS C-2A AND C-2B FOR DRIVEWAY CROSSING DETAILS.
4. SEE VTRANS STD DRAWINGS C-3A AND C-3B FOR SIDEWALK RAMP DETAILS.
5. AN ESTIMATED QUANTITY FOR ADJUSTING ELEVATION OF DRAINAGE CATCH BASINS AND MANHOLES HAS BEEN INCLUDED. THIS PAY ITEM SHALL ONLY BE USED FOR CB'S & MH'S INSTALLED IN AREAS THAT ARE TEMPORARILY PAVED TO MAINTAIN VEHICULAR TRAFFIC. ADJUSTMENT OF CB'S & MH'S IN LAWN AREAS OR OTHER AREAS THAT ARE OUTSIDE OF VEHICULAR TRAFFIC WILL BE PAID INCIDENTAL TO CATCH BASIN AND MANHOLE ITEMS.

DATUM
VERTICAL NAVD88
HORIZONTAL NAD83(92)

REPLACEMENT SHEETS ISSUED 10/05/11

0 10 20
SCALE 1:250

STA 19+590 TO 19+760

PROJECT NAME: DANVILLE
PROJECT NUMBER: F EGC 028-3(32)

FILE NAME: ...\PlotFiles\034 all09.ptf
DESIGN SUPERVISOR: GARY SANTY
DESIGNED BY: STANTEC
CONSTRUCTION PLAN CP-9
PLOT DATE: 10/4/2011
DRAWN BY: STANTEC
CHECKED BY: STANTEC
SHEET 71 OF 306

10/4/2011 1:42:26 PM V:\0953\active\09530033.002\Revised Plans\PlotFiles\034 all09.ptf

DRAINAGE STRUCTURES

STRUCTURE NO.	CONSTRUCTION ℄ STATION	COMMENTS
CB314	19+781.0, RT	1.5m⌀ PRCCB W/B GRATE
MH315	19+794.1, RT	1.5m⌀ PRCDMH W/COVER
DMH311	19+835.0, RT.	POND OUTLET CONTROL STRUCTURE, SEE NOTE 1
CB300C	19+763.0, LT.	PRCCB W/A GRATE
CB300D	19+794.6, LT.	PRCCB W/A GRATE
CB300E	19+764.7, LT.	PRCCB W/A GRATE
CB300F	19+796.2, LT.	PRCCB W/A GRATE

STORMWATER MANAGEMENT

STRUCTURE #	LOCATION	COMMENTS
312	19+787-19+844, RT.	CONSTRUCT STORMWATER MANAGEMENT POND AND VEGETATED TREATMENT SWALE 2-A. SEE SWM PLANS.
317	19+858-19+979, RT.	CONSTRUCT VEGETATED TREATMENT SWALE 2-B. SEE SWM PLANS.

DRAINAGE NOTES

311 CONST. ℄ 19+835.0 TO 19+865.9 RT.
EXTENDED DETENTION POND OUTLET STRUCTURE (ITEM 604.21)
NEW 300mm x 9m DUCTILE IRON POND DRAIN
WITH 300 mm GATE VALVE AND ELBOW
NEW 200mm x 9m DUCTILE IRON WITH 2-200mm ELBOWS
NEW 750mm x 32.0m PIPE OPTION 2
SEE SWM-2 FOR DETAILS.
INSTALL END SECTION AT OUTLET

313 CONST. ℄ 19+846.0 TO 19+866.0 RT.
NEW 900mm x 22.0m PIPE OPTION 2
CONST. STONE FILL TYPE II ⊠ INLET AND OUTLET
CONST. STRAIGHT CONC. HEADWALL ⊠ INLET (REF D-33)
INSTALL END SECTION AT OUTLET

314 CONST. ℄ 19+781.0 TO 19+794.0 RT.
NEW 900mm x 68.9m PIPE OPTION 2

315 CONST. ℄ 19+794.0 TO 19+808.1 RT.
NEW 900mm x 13.5m PIPE OPTION 2
INSTALL END SECTION AT OUTLET

316 CONST. ℄ 19+844.1 TO 19+858.0 RT.
NEW 450mm x 13.2m PIPE OPTION 3
INSTALL END SECTIONS AT INLET AND OUTLET

300C CONST. ℄ 19+763.0 TO 19+794.6 LT.
NEW 600mm x 30.4m PIPE OPTION 3

300E CONST. ℄ 19+764.7 TO 19+763.0 LT.
NEW 300mm x 5.0m PIPE OPTION 3

300F CONST. ℄ 19+796.2 TO 19+794.6 LT.
NEW 300mm x 5.0m PIPE OPTION 3

VTRANS Metric

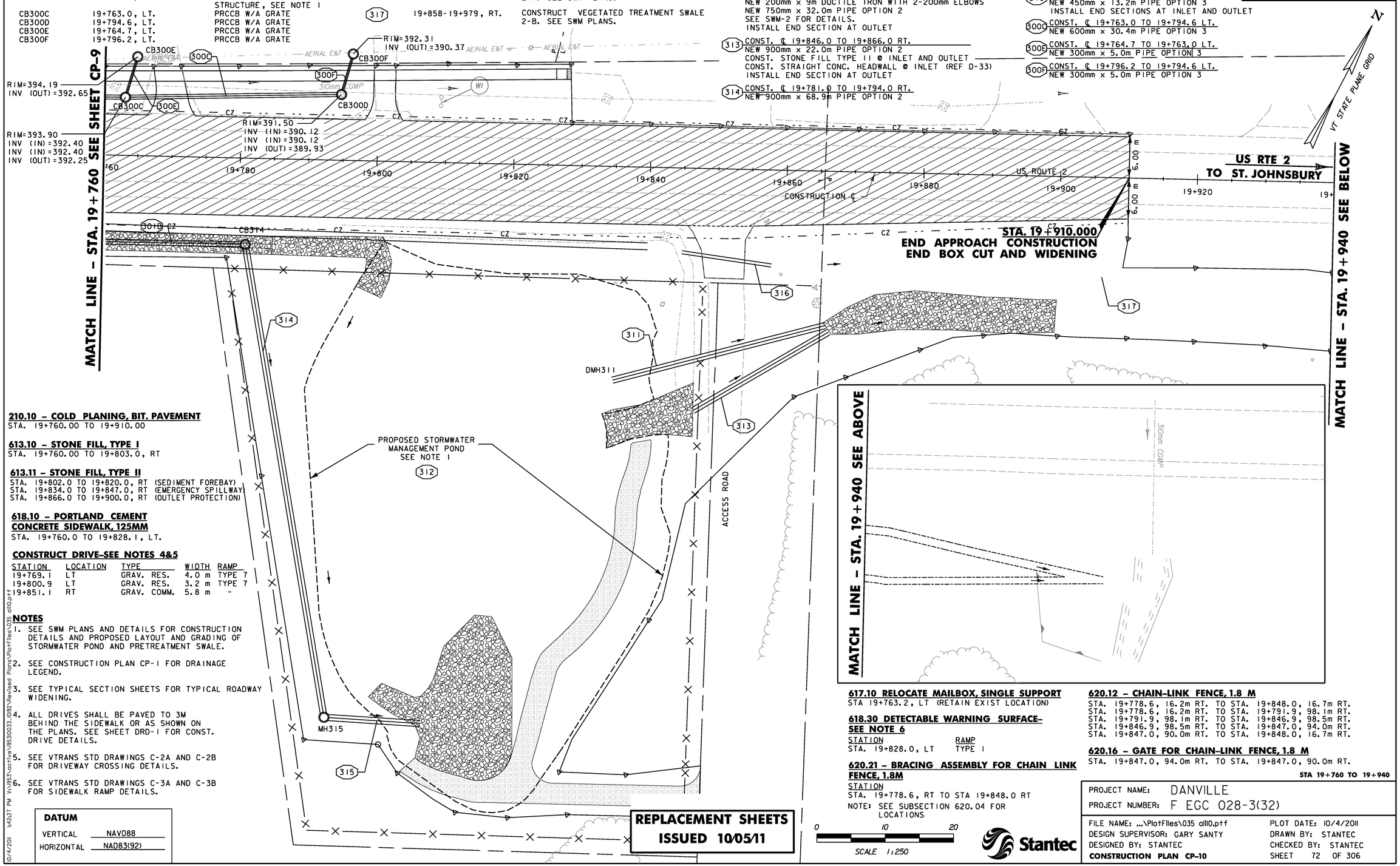

210.10 – COLD PLANING, BIT. PAVEMENT
STA. 19+760.00 TO 19+910.00

613.10 – STONE FILL, TYPE I
STA. 19+760.00 TO 19+803.0, RT

613.11 – STONE FILL, TYPE II
STA. 19+802.0 TO 19+820.0, RT (SEDIMENT FOREBAY)
STA. 19+834.0 TO 19+847.0, RT (EMERGENCY SPILLWAY)
STA. 19+866.0 TO 19+900.0, RT (OUTLET PROTECTION)

618.10 – PORTLAND CEMENT CONCRETE SIDEWALK, 125MM
STA. 19+760.0 TO 19+828.1, LT.

CONSTRUCT DRIVE-SEE NOTES 4&5

STATION	LOCATION	TYPE	WIDTH	RAMP
19+769.1	LT	GRAV. RES.	4.0 m	TYPE 7
19+800.9	LT	GRAV. RES.	3.2 m	TYPE 7
19+851.1	RT	GRAV. COMM.	5.8 m	-

NOTES
1. SEE SWM PLANS AND DETAILS FOR CONSTRUCTION DETAILS AND PROPOSED LAYOUT AND GRADING OF STORMWATER POND AND PRETREATMENT SWALE.
2. SEE CONSTRUCTION PLAN CP-1 FOR DRAINAGE LEGEND.
3. SEE TYPICAL SECTION SHEETS FOR TYPICAL ROADWAY WIDENING.
4. ALL DRIVES SHALL BE PAVED TO 3M BEHIND THE SIDEWALK OR AS SHOWN ON THE PLANS. SEE SHEET DRD-1 FOR CONST. DRIVE DETAILS.
5. SEE VTRANS STD DRAWINGS C-2A AND C-2B FOR DRIVEWAY CROSSING DETAILS.
6. SEE VTRANS STD DRAWINGS C-3A AND C-3B FOR SIDEWALK RAMP DETAILS.

DATUM
VERTICAL NAVD88
HORIZONTAL NAD83(92)

617.10 RELOCATE MAILBOX, SINGLE SUPPORT
STA 19+763.2, LT (RETAIN EXIST LOCATION)

618.30 DETECTABLE WARNING SURFACE-SEE NOTE 6

STATION	RAMP
STA. 19+828.0, LT	TYPE 1

620.21 – BRACING ASSEMBLY FOR CHAIN LINK FENCE, 1.8M
STATION
STA. 19+778.6, RT TO STA 19+848.0 RT
NOTE: SEE SUBSECTION 620.04 FOR LOCATIONS

620.12 – CHAIN-LINK FENCE, 1.8 M
STA. 19+778.6, 16.2m RT. TO STA. 19+848.0, 16.7m RT.
STA. 19+778.6, 16.2m RT. TO STA. 19+791.9, 98.1m RT.
STA. 19+791.9, 98.1m RT. TO STA. 19+846.9, 98.5m RT.
STA. 19+846.9, 98.5m RT. TO STA. 19+847.0, 94.0m RT.
STA. 19+847.0, 90.0m RT. TO STA. 19+848.0, 16.7m RT.

620.16 – GATE FOR CHAIN-LINK FENCE, 1.8 M
STA. 19+847.0, 94.0m RT. TO STA. 19+847.0, 90.0m RT.

STA 19+760 TO 19+940

REPLACEMENT SHEETS ISSUED 10/05/11

0 10 20
SCALE 1:250

Stantec

PROJECT NAME:	DANVILLE
PROJECT NUMBER:	F EGC 028-3(32)
FILE NAME: ...\Plotfiles\035 all10.ptf	PLOT DATE: 10/4/2011
DESIGN SUPERVISOR: GARY SANTY	DRAWN BY: STANTEC
DESIGNED BY: STANTEC	CHECKED BY: STANTEC
CONSTRUCTION PLAN CP-10	SHEET 72 OF 306

10/4/2011 1:42:27 PM V:\1953\active\95300033\092\Revised Plans\Plotfiles\035 all10.ptf

MATCH LINE – SEE SHEET CP–3

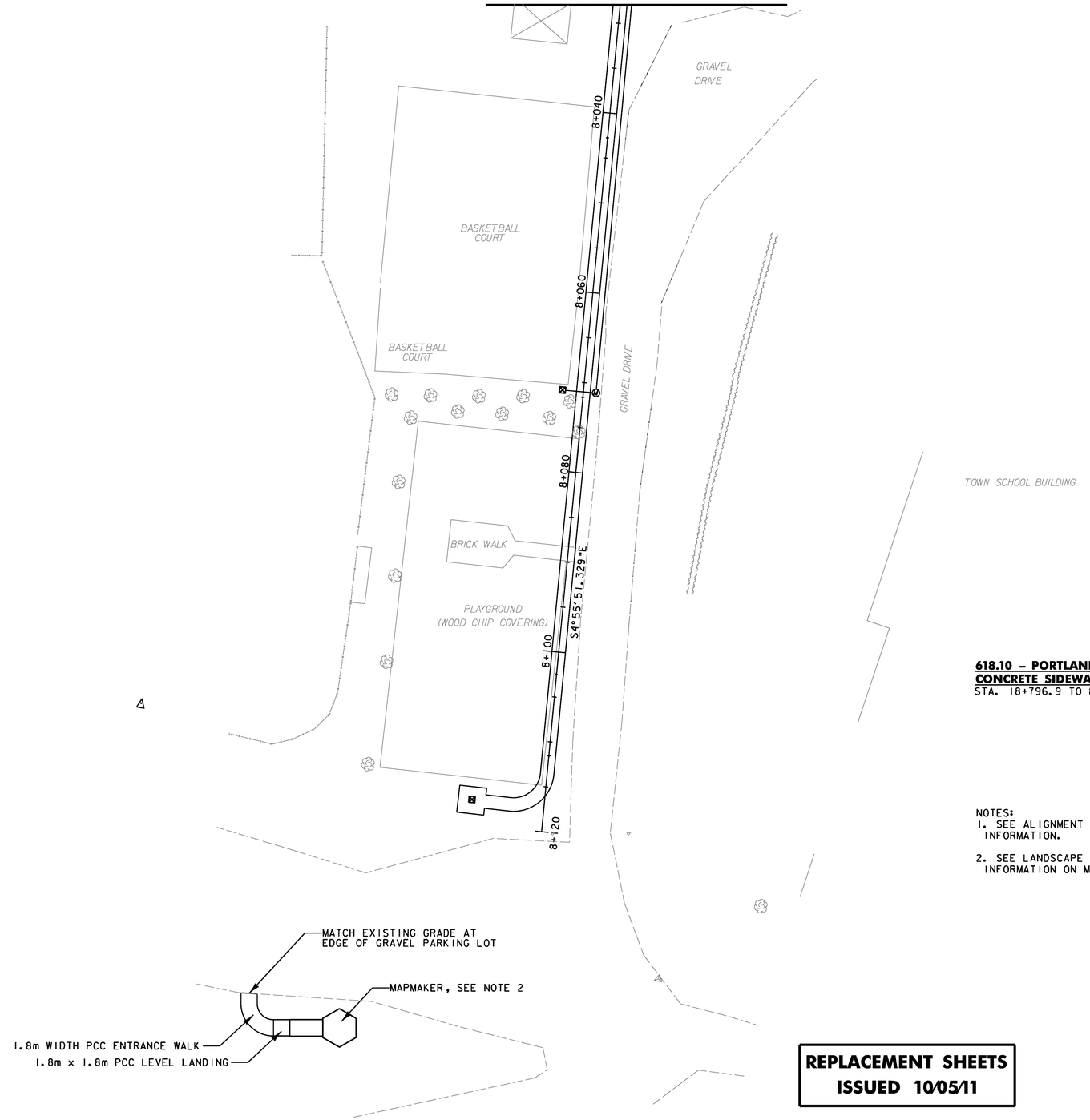

618.10 – PORTLAND CEMENT CONCRETE SIDEWALK, 125MM
STA. 18+796.9 TO 8+117.2

NOTES:
1. SEE ALIGNMENT PLANS FOR SIDEWALK LAYOUT INFORMATION.
2. SEE LANDSCAPE AND LIGHTING PLANS FOR MORE INFORMATION ON MAPMAKER.

REPLACEMENT SHEETS ISSUED 10/05/11

0 10 20
SCALE 1:250

Stantec

PROJECT NAME: DANVILLE	
PROJECT NUMBER: F EGC 028-3(32)	
FILE NAME: ...\PlotFiles\027 alll.PTF	PLOT DATE: 10/4/2011
DESIGN SUPERVISOR: GARY SANTY	DRAWN BY: STANTEC
DESIGNED BY: STANTEC	CHECKED BY: STANTEC
CONSTRUCTION PLAN CP–11	SHEET 73 OF 306

10/4/2011 1:42:28 PM V:\1953\active\195300033.0092\Revised Plans\PlotFiles\027 alll.PTF

Metric

L = 180.000 m
K = 33

STA. 18+507.730
BEGIN APPROACH CONSTRUCTION
MATCH EXISTING

STA. 18+553.730
END APPROACH CONSTRUCTION
BEGIN PROJECT F EGC 028-3(32)

SPLINE GRADE

PROPOSED GRADE

EXISTING GRADE

0.8651%

6.3830%

PVC 18+410.000
ELEV 440.220

PVI 18+500.000
ELEV 441.000

442.565

EXISTING ELEV.
PROPOSED ELEV.

PVT 18+590.000
ELEV 446.745

PVC 18+595.000
ELEV 447.084

L = 280.000 m
K = 20
SSD = 90 m

18+410	18+420	18+430	18+440	18+450	18+460	18+470	18+480	18+490	18+500	18+510	18+520	18+530	18+540	18+550	18+560	18+570	18+580	18+590	18+600
440.22	440.38	440.53	440.73	440.93	441.18	441.43	441.72	442.02	442.32	442.67	443.04	443.43	443.83	444.29	444.75	445.22	445.77	446.31	446.91
										442.670	443.040	443.467	443.936	444.437	444.968	445.529	446.122	446.745	447.377

US ROUTE 2 – 18+410 TO 18+600

LEFT e = +0.020

CONST. ℄ (PGL)

RIGHT e = -0.020

STA 18+600.000
LEFT e = 0.020
RIGHT e = -0.020

HORIZONTAL SCALE = 1 : 250
VERTICAL SCALE = 1 : 100

18+410 – 18+600

DATUM
VERTICAL NAVD88
HORIZONTAL NAD83(92)

Stantec

PROJECT NAME: DANVILLE
PROJECT NUMBER: F EGC 028-3(32)

FILE NAME: ...\PlotFiles\us2pro_pri.ptf
DESIGN SUPERVISOR: GARY SANTY
DESIGNED BY: STANTEC
PROFILE – US ROUTE 2 PRO-1

PLOT DATE: 1/18/2011
DRAWN BY: STANTEC
CHECKED BY: STANTEC
SHEET 74 OF 306

1/8/2011 15:00 PM v:\1953\active\195300033.1092\Highway\PlotFiles\us2pro_pri.ptf

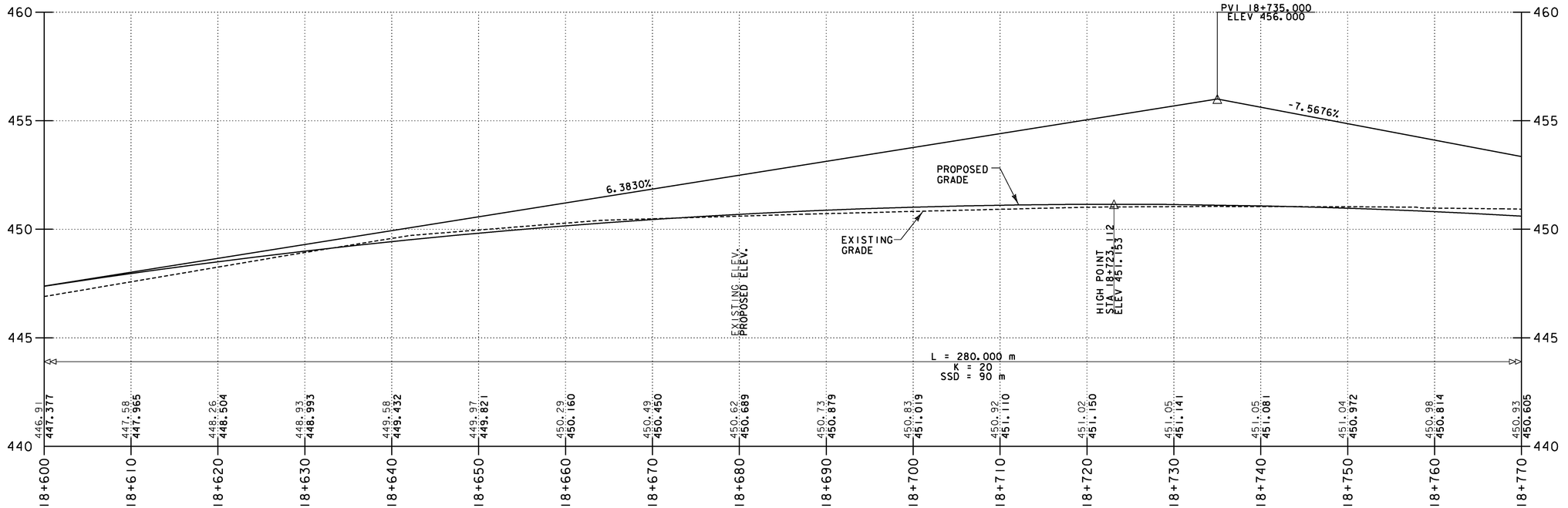

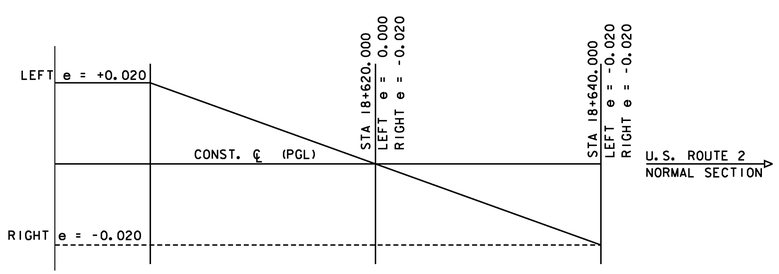

US ROUTE 2 – 18+600 TO 18+770

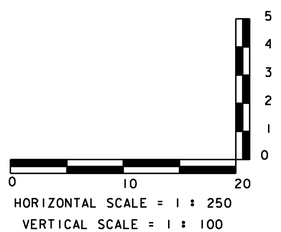

HORIZONTAL SCALE = 1 : 250
VERTICAL SCALE = 1 : 100

DATUM

VERTICAL	NAVD88
HORIZONTAL	NAD83(92)

18+600 – 18+770

PROJECT NAME:	DANVILLE
PROJECT NUMBER:	F EGC 028-3(32)
FILE NAME: ...\PlotFiles\us2pro_pr2.ptf	PLOT DATE: 1/18/2011
DESIGN SUPERVISOR: GARY SANTY	DRAWN BY: STANTEC
DESIGNED BY: STANTEC	CHECKED BY: STANTEC
PROFILE – US ROUTE 2 PRO-2	SHEET 75 OF 306

Stantec

1/18/2011 1:51:01 PM v:\1953\active\195300033.0092\Highway\PlotFiles\us2pro_pr2.ptf

Metric

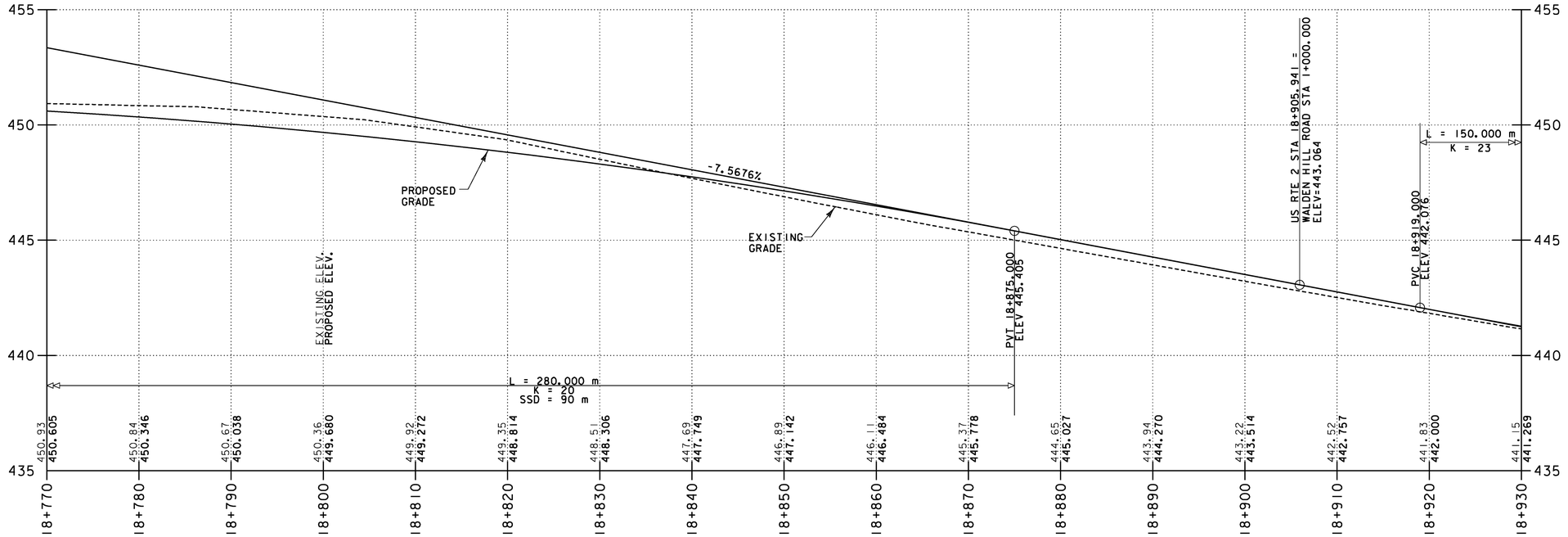

US ROUTE 2 – 18+770 TO 18+930

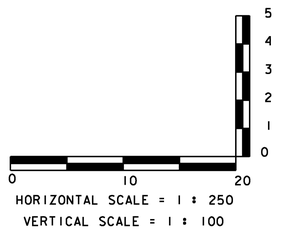

DATUM

VERTICAL	NAVD88
HORIZONTAL	NAD83(92)

Stantec

18+770 – 18+930

PROJECT NAME:	DANVILLE
PROJECT NUMBER:	F EGC 028-3(32)
FILE NAME: ...\PlotFiles\us2pro_pr3.ptf	PLOT DATE: 1/18/2011
DESIGN SUPERVISOR: GARY SANTY	DRAWN BY: STANTEC
DESIGNED BY: STANTEC	CHECKED BY: STANTEC
PROFILE – US ROUTE 2 PRO-3	SHEET 76 OF 306

1/18/2011 1:51:01 PM v:\1953\active\195310033.092\highway\PlotFiles\us2pro_pr3.ptf

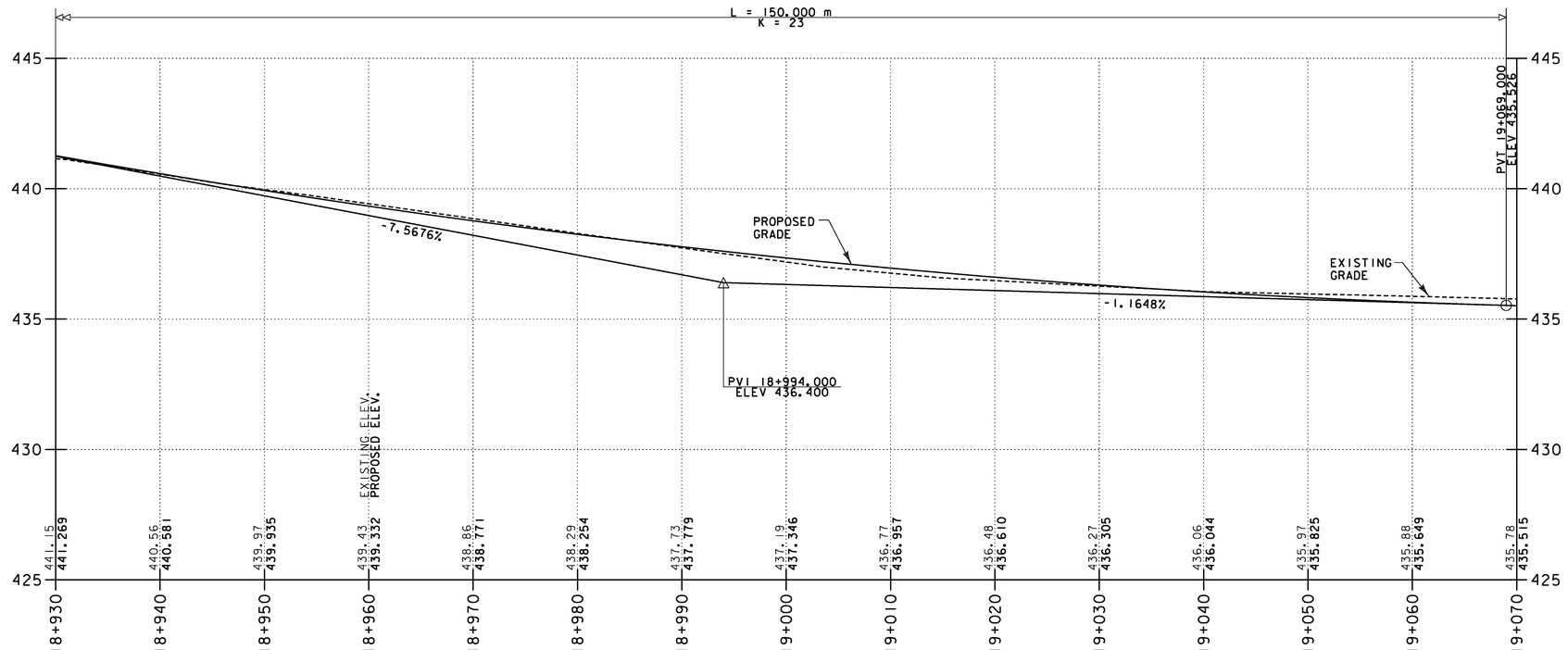

US ROUTE 2 – 18+930 TO 19+070

HORIZONTAL SCALE = 1 : 250
VERTICAL SCALE = 1 : 100

DATUM
VERTICAL NAVD88
HORIZONTAL NAD83(92)

18+930 – 19+070

PROJECT NAME: DANVILLE
PROJECT NUMBER: F EGC 028-3(32)

FILE NAME: ...\PlotFiles\us2pro_pr4.ptf
DESIGN SUPERVISOR: GARY SANTY
DESIGNED BY: STANTEC
PROFILE – US ROUTE 2 PRO-4

PLOT DATE: 1/18/2011
DRAWN BY: STANTEC
CHECKED BY: STANTEC
SHEET 77 OF 306

1/18/2011 1:51:02 PM v:\1953\active\95300033.0092\Highway\PlotFiles\us2pro_pr4.ptf

Metric

L = 180.000 m
K = 20
SSD = 91 m

PVC 19+080.000
ELEV 435.398

US RTE 2 STA 19+126.333 =
PARK STREET STA 2+000.000
ELEV=434.332

PVI 19+170.000
ELEV 434.350

US RTE 2 STA 19+172.500 =
HILL STREET STA 3+000.000
ELEV=432.219

US RTE 2 STA 19+175.919 =
PEACHAM ROAD STA 4+000.000
ELEV=432.023

US RTE 2 STA 19+224.651 =
SMITH STREET STA 5+000.000
ELEV=428.577

PVT 19+260.000
ELEV 425.350

-1.1648%

-10.0000%

PROPOSED GRADE

EXISTING GRADE

440
435
430
425
420

	19+070	19+080	19+090	19+100	19+110	19+120	19+130	19+140	19+150	19+160	19+170	19+180	19+190	19+200	19+210	19+220	19+230	19+240	19+250	19+260
EXISTING ELEV.	435.78	435.68	435.48	435.26	435.03	434.75	434.29	433.84	433.28	432.69	432.14	431.68	431.29	430.84	430.08	429.28	428.35	427.35	426.34	425.34
PROPOSED ELEV.	435.515	435.398	435.257	435.067	434.828	434.640	434.202	433.816	433.380	432.896	432.362	431.779	431.147	430.466	429.736	428.957	428.129	427.252	426.325	425.350

US ROUTE 2 – 19+070 TO 19+260

HORIZONTAL SCALE = 1 : 250
VERTICAL SCALE = 1 : 100

DATUM
VERTICAL NAVD88
HORIZONTAL NAD83(92)

Stantec

19+070 – 19+260

PROJECT NAME: DANVILLE
PROJECT NUMBER: F EGC 028-3(32)

FILE NAME: ...\PlotFiles\us2pro_pr5.ptf
DESIGN SUPERVISOR: GARY SANTY
DESIGNED BY: STANTEC
PROFILE – US ROUTE 2 PRO-5

PLOT DATE: 1/18/2011
DRAWN BY: STANTEC
CHECKED BY: STANTEC
SHEET 78 OF 306

1/18/2011 15:03 PM v:\1953\active\195310033_1092\highway\PlotFiles\us2pro_pr5.ptf

Metric

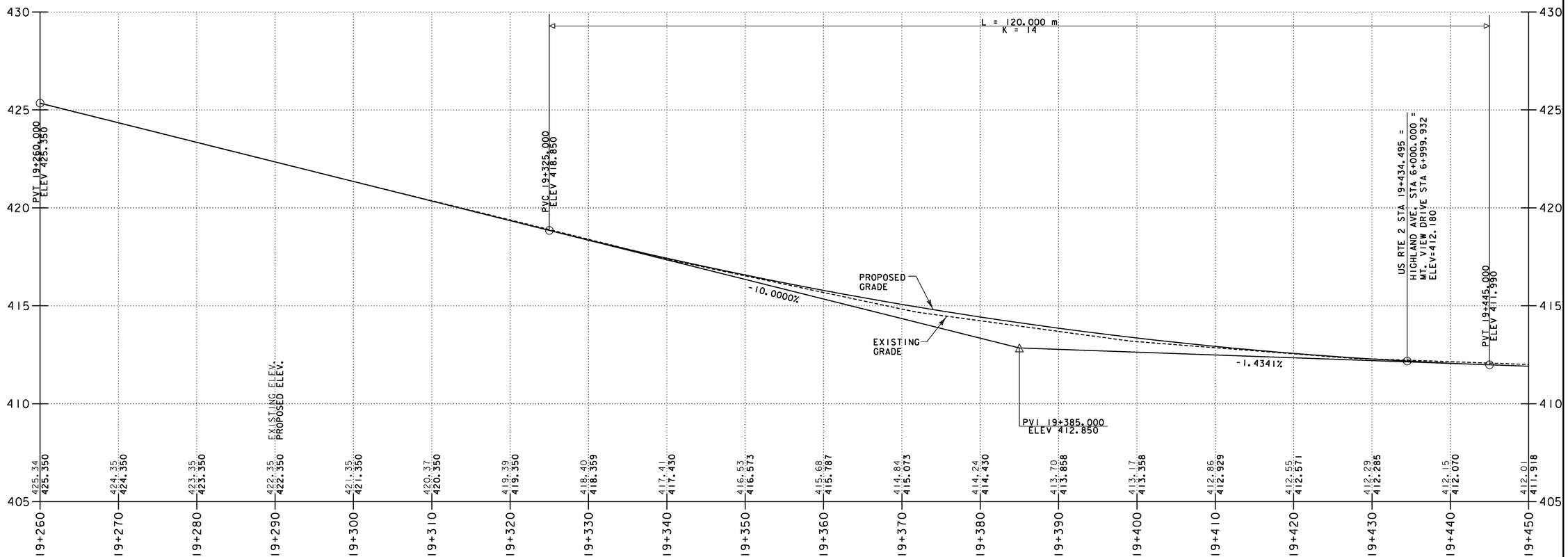

US ROUTE 2 – 19+260 TO 19+450

DATUM	
VERTICAL	NAVD88
HORIZONTAL	NAD83(92)

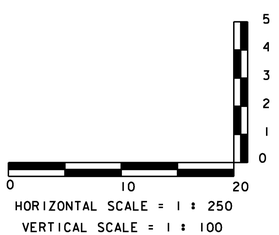

HORIZONTAL SCALE = 1 : 250
VERTICAL SCALE = 1 : 100

Stantec

19+260 – 19+450

PROJECT NAME:	DANVILLE
PROJECT NUMBER:	F EGC 028-3(32)
FILE NAME: ...\PlotFiles\us2pro_pr6.ptf	PLOT DATE: 1/18/2011
DESIGN SUPERVISOR: GARY SANTY	DRAWN BY: STANTEC
DESIGNED BY: STANTEC	CHECKED BY: STANTEC
PROFILE – US ROUTE 2 PRO-6	SHEET 79 OF 306

1/18/2011 1:51:04 PM v:\1953\active\195300033.1092\Highway\PlotFiles\us2pro_pr6.ptf

Metric

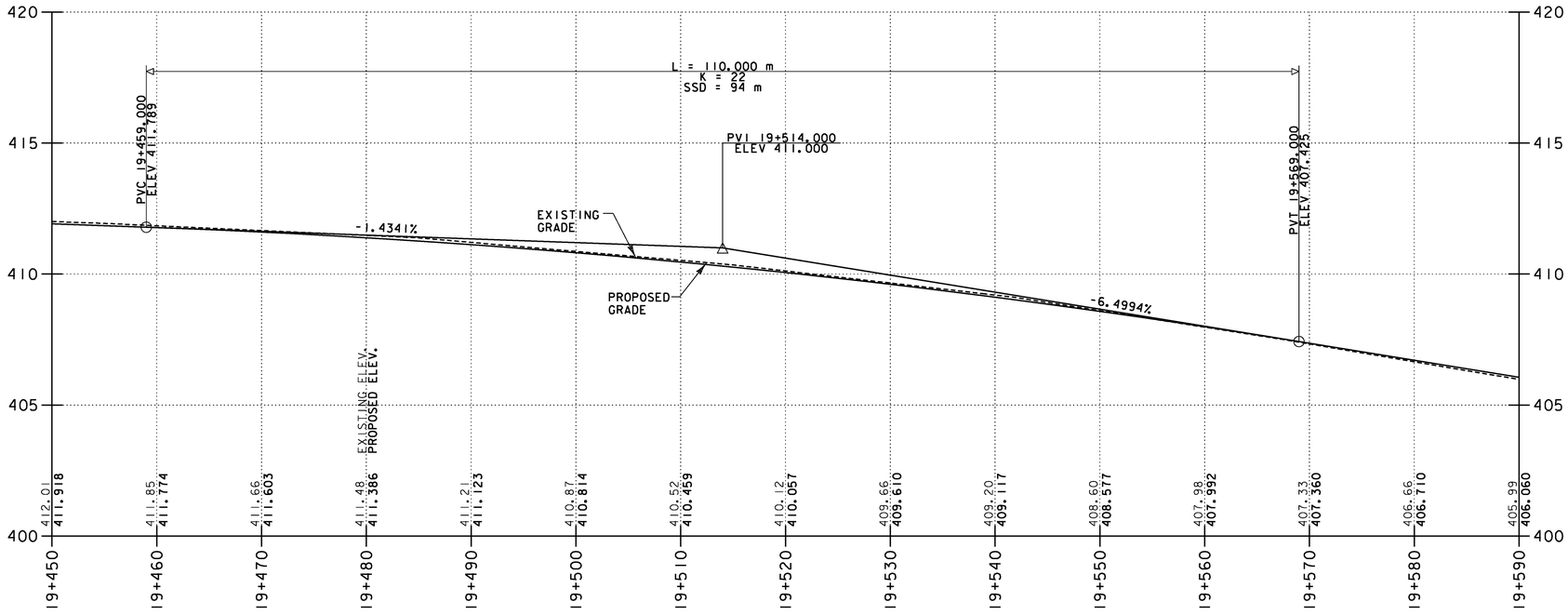

US ROUTE 2 – 19+450 TO 19+590

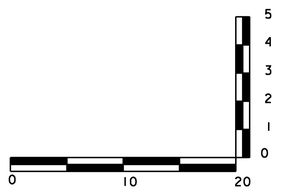

DATUM

VERTICAL NAVD88

HORIZONTAL NAD83(92)

Stantec

19+450 – 19+590

PROJECT NAME: DANVILLE

PROJECT NUMBER: F EGC 028-3(32)

FILE NAME: ...\PlotFiles\us2pro_pr7.ptf
DESIGN SUPERVISOR: GARY SANTY
DESIGNED BY: STANTEC
PROFILE – US ROUTE 2 PRO-7

PLOT DATE: 1/18/2011
DRAWN BY: STANTEC
CHECKED BY: STANTEC
SHEET 80 OF 306

1/8/2011 15:05 PM v:\1953\active\195300033.0192\Highway\PlotFiles\us2pro_pr7.ptf

Metric

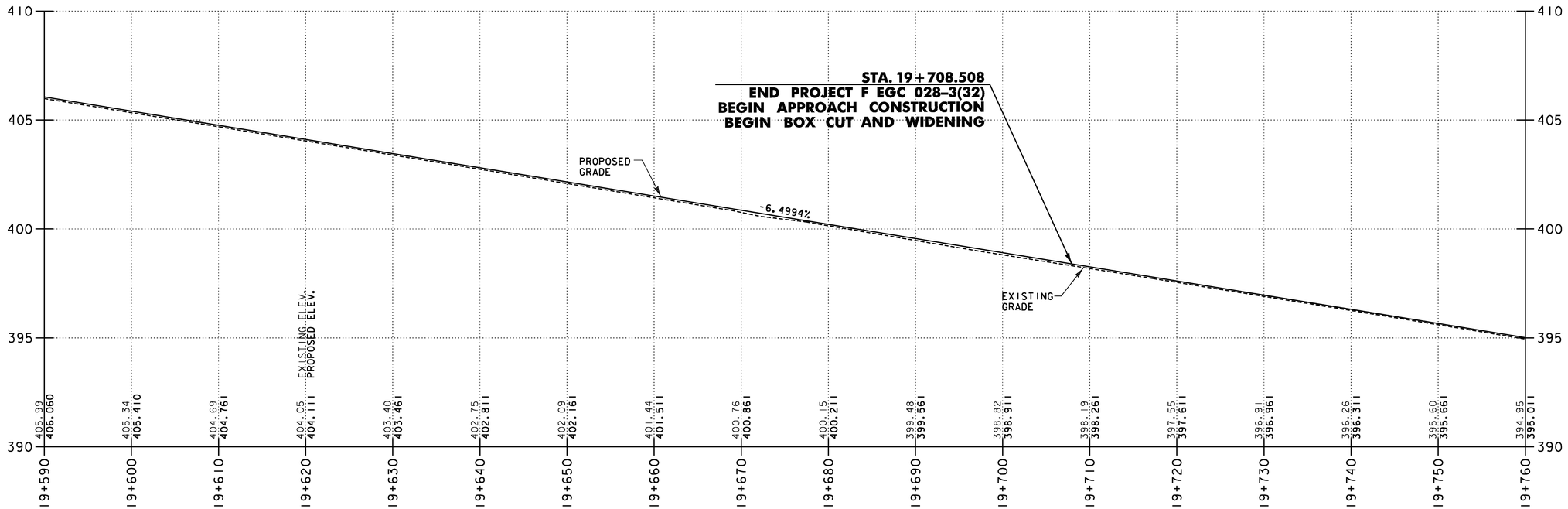

US ROUTE 2 – 19+590 TO 19+760

DATUM

VERTICAL	NAVD88
HORIZONTAL	NAD83(92)

HORIZONTAL SCALE = 1 : 250
VERTICAL SCALE = 1 : 100

19+590 – 19+760

PROJECT NAME:	DANVILLE
PROJECT NUMBER:	F EGC 028-3(32)
FILE NAME: ...\PlotFiles\us2pro_pr8.ptf	PLOT DATE: 1/18/2011
DESIGN SUPERVISOR: GARY SANTY	DRAWN BY: STANTEC
DESIGNED BY: STANTEC	CHECKED BY: STANTEC
PROFILE – US ROUTE 2 PRO-8	SHEET 81 OF 306

Stantec

1/18/2011 15:06 PM v:\1953\active\195300033.1092\Highway\PlotFiles\us2pro_pr8.ptf

Metric

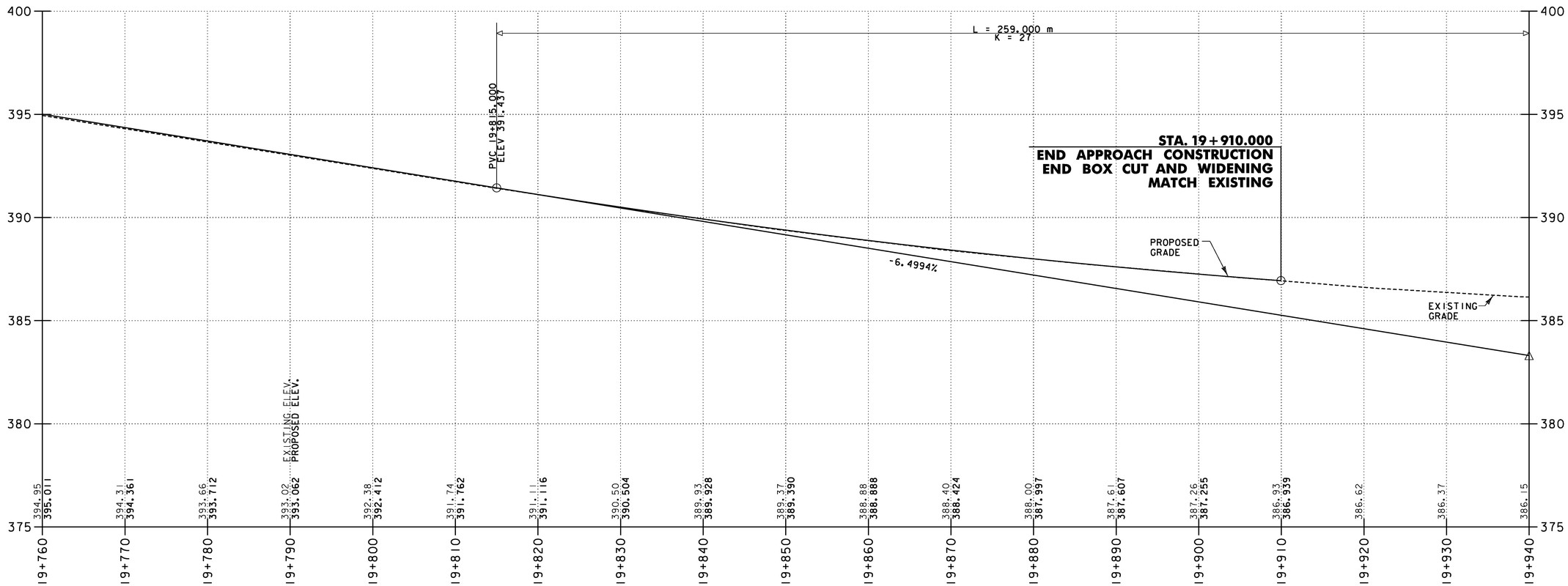

US ROUTE 2 – 19+760 TO 19+940

HORIZONTAL SCALE = 1 : 250
VERTICAL SCALE = 1 : 100

DATUM	
VERTICAL	NAVD88
HORIZONTAL	NAD83(92)

19+760 – 19+940

PROJECT NAME:	DANVILLE
PROJECT NUMBER:	F EGC 028-3(32)
FILE NAME: ...\PlotFiles\us2pro_pr9.ptf	PLOT DATE: 1/18/2011
DESIGN SUPERVISOR: GARY SANTY	DRAWN BY: STANTEC
DESIGNED BY: STANTEC	CHECKED BY: STANTEC
PROFILE – US ROUTE 2 PRO-9	SHEET 82 OF 306

Stantec

1/18/2011 1:51:07 PM v:\1953\active\195310033_1092\Highway\PlotFiles\us2pro_pr9.ptf

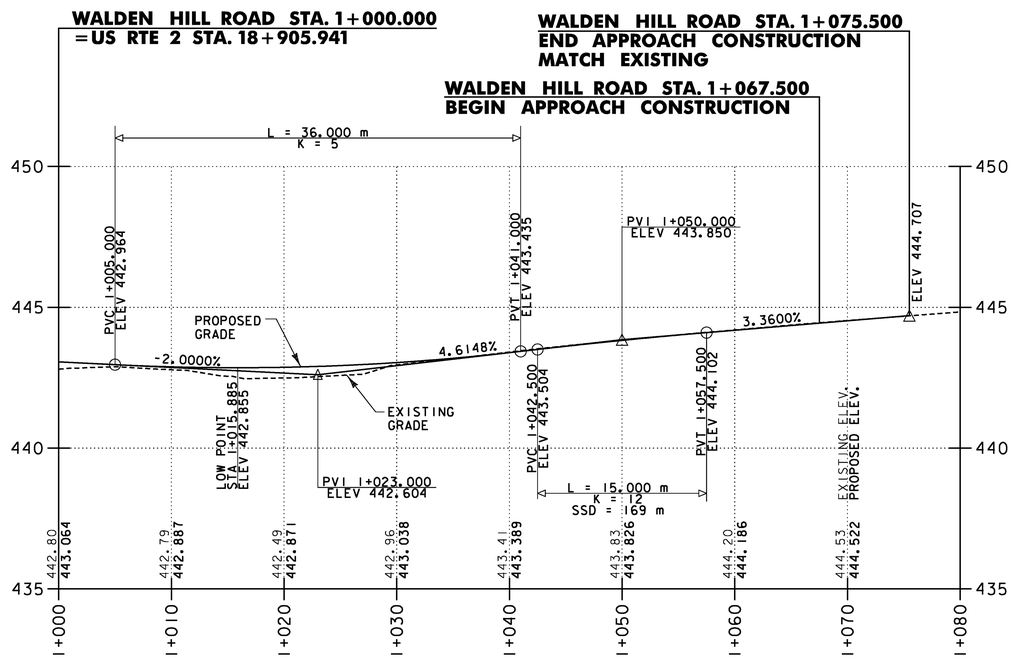

WALDEN HILL ROAD – 1+000 TO 1+080

HORIZONTAL SCALE = 1 : 250
VERTICAL SCALE = 1 : 100

DATUM
VERTICAL NAVD88
HORIZONTAL NAD83(92)

1+000 – 1+080

PROJECT NAME: DANVILLE
PROJECT NUMBER: F EGC 028-3(32)

FILE NAME: ...\PlotFiles\whrdpro_pr10.ptf
DESIGN SUPERVISOR: GARY SANTY
DESIGNED BY: STANTEC
PROFILE – WALDEN HILL ROAD PRO-10
PLOT DATE: 1/18/2011
DRAWN BY: STANTEC
CHECKED BY: STANTEC
SHEET 83 OF 306

1/18/2011 15:08 PM v:\1953\active\195310033_i092\Highway\PlotFiles\whrdpro_pr10.ptf

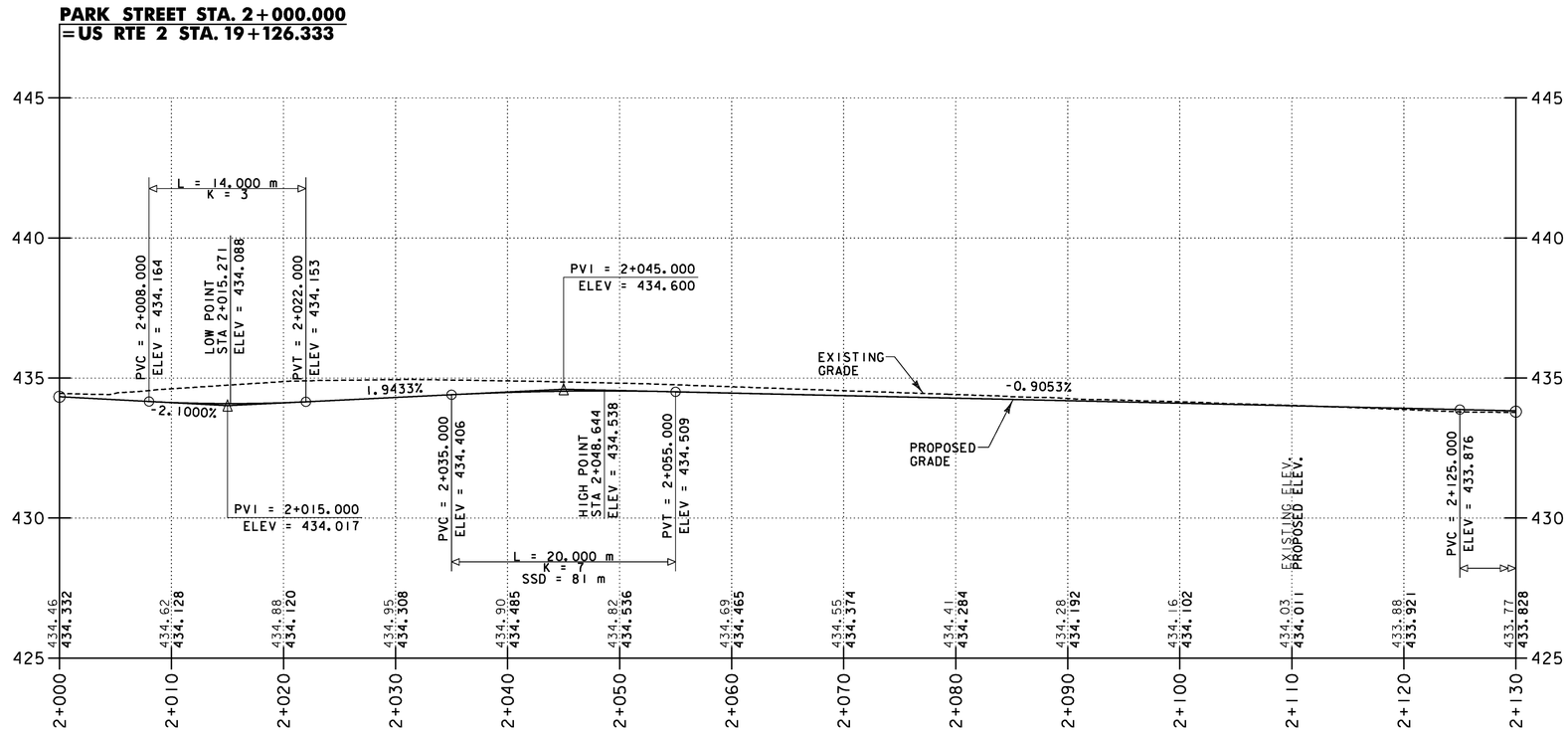

PARK STREET – 2+000 TO 2+130

HORIZONTAL SCALE = 1 : 250
VERTICAL SCALE = 1 : 100

DATUM
VERTICAL NAVD88
HORIZONTAL NAD83(92)

2+000 – 2+130

PROJECT NAME: DANVILLE
PROJECT NUMBER: F EGC 028-3(32)

FILE NAME: ...\PlotFiles\pkstpro_prll.ptf
DESIGN SUPERVISOR: GARY SANTY
DESIGNED BY: STANTEC
PROFILE – PARK STREET PRO-11

PLOT DATE: 1/18/2011
DRAWN BY: STANTEC
CHECKED BY: STANTEC
SHEET 84 OF 306

1/8/2011 1:51:09 PM v:\1953\active\195300033.1092\Highway\PlotFiles\pkstpro_prll.ptf

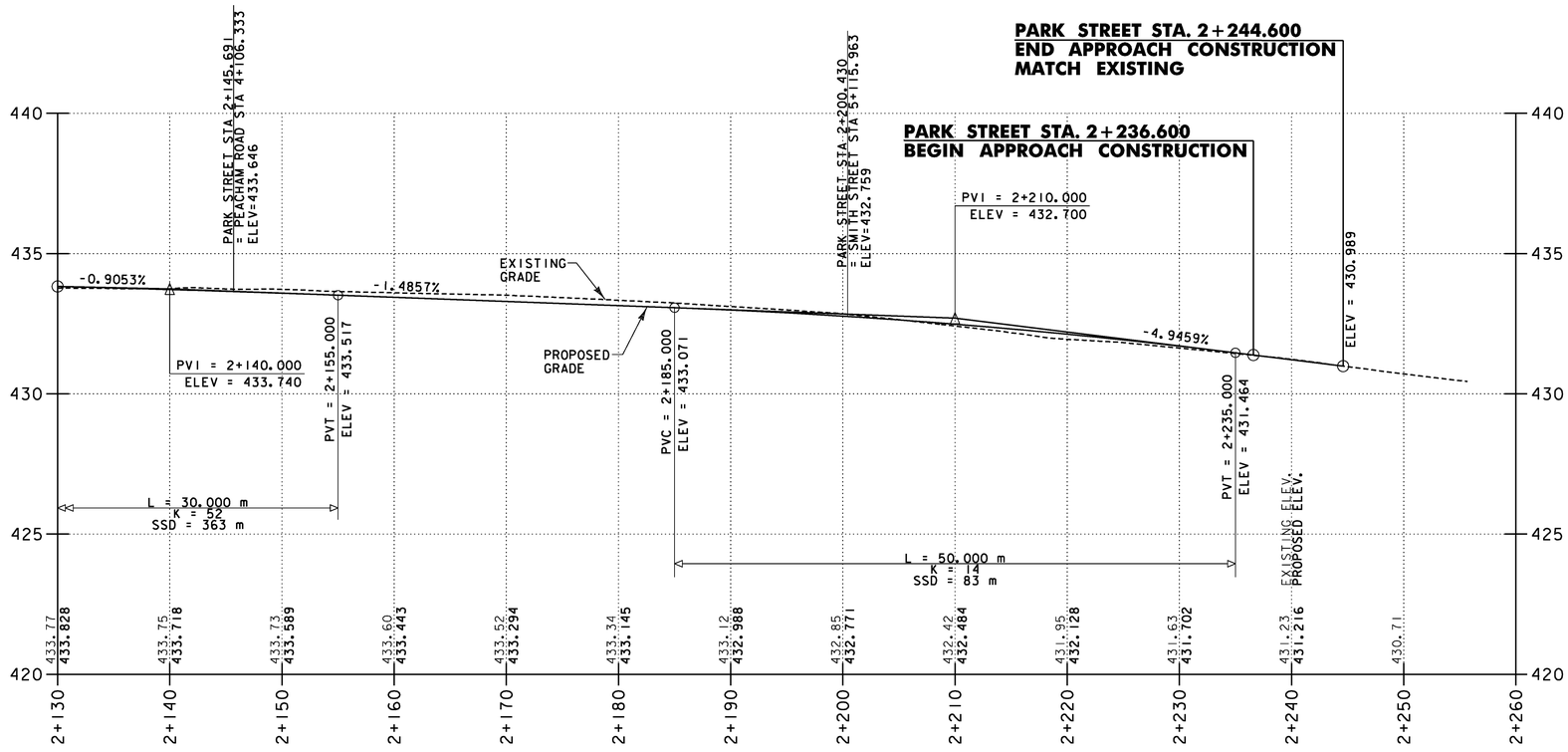

PARK STREET – 2+130 TO 2+260

HORIZONTAL SCALE = 1 : 250
VERTICAL SCALE = 1 : 100

DATUM
VERTICAL NAVD88
HORIZONTAL NAD83(92)

2+130 – 2+260

PROJECT NAME: DANVILLE
PROJECT NUMBER: F EGC 028-3(32)

FILE NAME: ...\PlotFiles\pkstpro_pr12.ptf
DESIGN SUPERVISOR: GARY SANTY
DESIGNED BY: STANTEC
PROFILE – PARK STREET PRO-12
PLOT DATE: 1/18/2011
DRAWN BY: STANTEC
CHECKED BY: STANTEC
SHEET 85 OF 306

1/18/2011 1:5:10 PM v:\1953\active\195310033_1092\Highway\PlotFiles\pkstpro_pr12.ptf

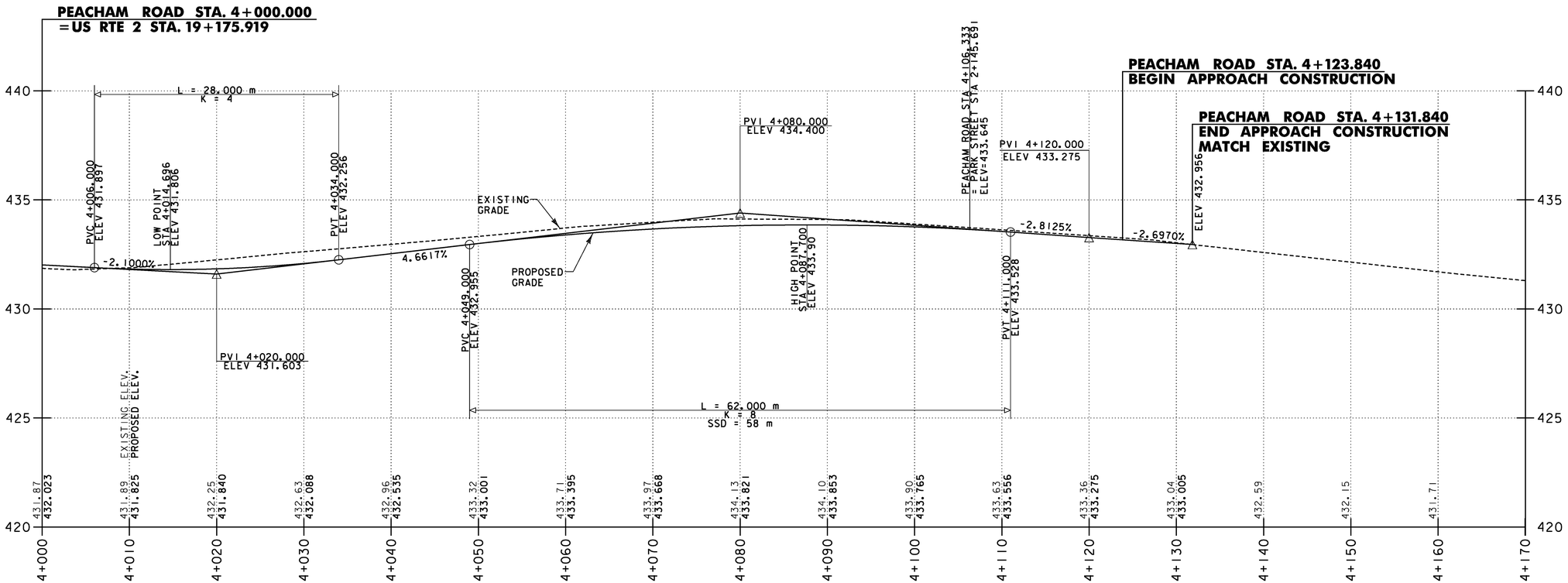

PEACHAM RD – 4+000 TO 4+170

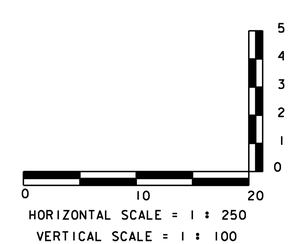

HORIZONTAL SCALE = 1 : 250
VERTICAL SCALE = 1 : 100

4+000 – 4+170

PROJECT NAME: DANVILLE	
PROJECT NUMBER: F EGC 028-3(32)	
FILE NAME: ...\PlotFiles\pchrd_pr13.ptf	PLOT DATE: 1/18/2011
DESIGN SUPERVISOR: GARY SANTY	DRAWN BY: STANTEC
DESIGNED BY: STANTEC	CHECKED BY: STANTEC
PROFILE – PEACHAM ROAD PRO-13	SHEET 86 OF 306

DATUM

VERTICAL	NAVD88
HORIZONTAL	NAD83(92)

1/18/2011 1:51:11 PM v:\1953\active\195310033_10192\Highway\PlotFiles\pchrd_pr13.ptf

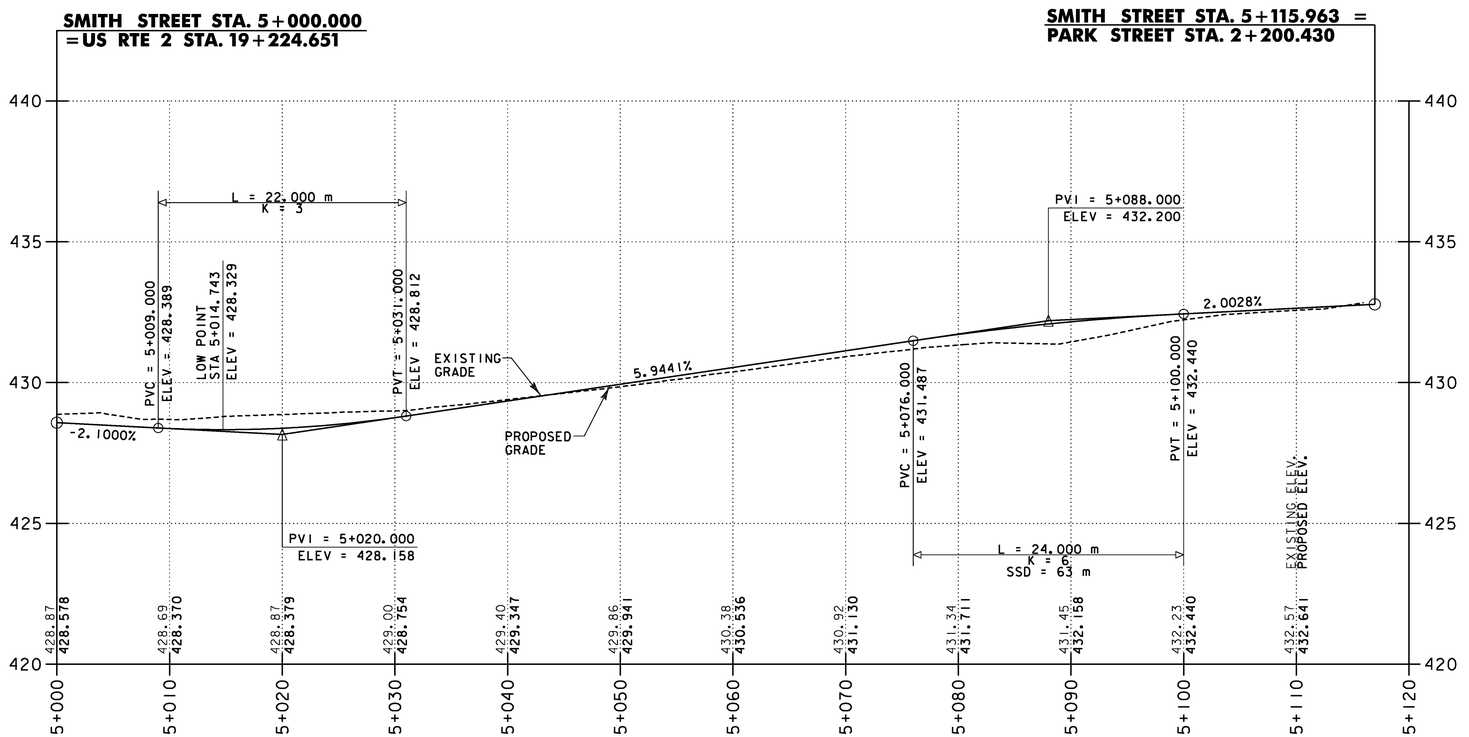

SMITH STREET – 5+000 TO 5+120

HORIZONTAL SCALE = 1 : 250
VERTICAL SCALE = 1 : 100

DATUM

VERTICAL	NAVD88
HORIZONTAL	NAD83(92)

5+000 – 5+120

PROJECT NAME:	DANVILLE
PROJECT NUMBER:	F EGC 028-3(32)
FILE NAME: ...\plotfiles\smst_pr14.ptf	PLOT DATE: 1/18/2011
DESIGN SUPERVISOR: GARY SANTY	DRAWN BY: STANTEC
DESIGNED BY: STANTEC	CHECKED BY: STANTEC
PROFILE – SMITH STREET PRO-14	SHEET 87 OF 306

1/18/2011 11:11:2 PM v:\1853\active\195300033.0192\highway\plotfiles\smst_pr14.ptf

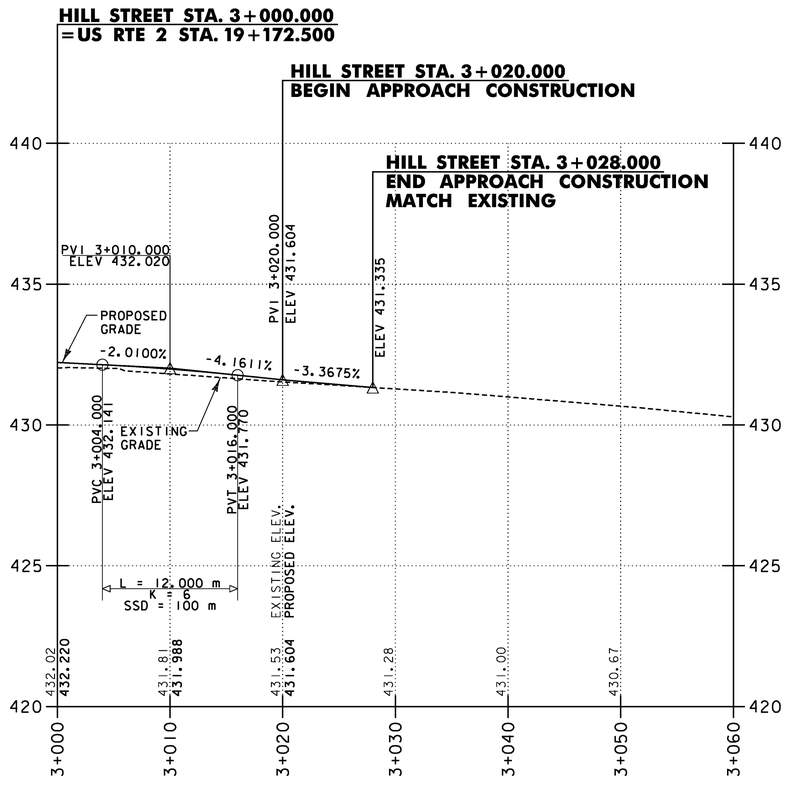

HILL STREET
3+000 TO 3+060

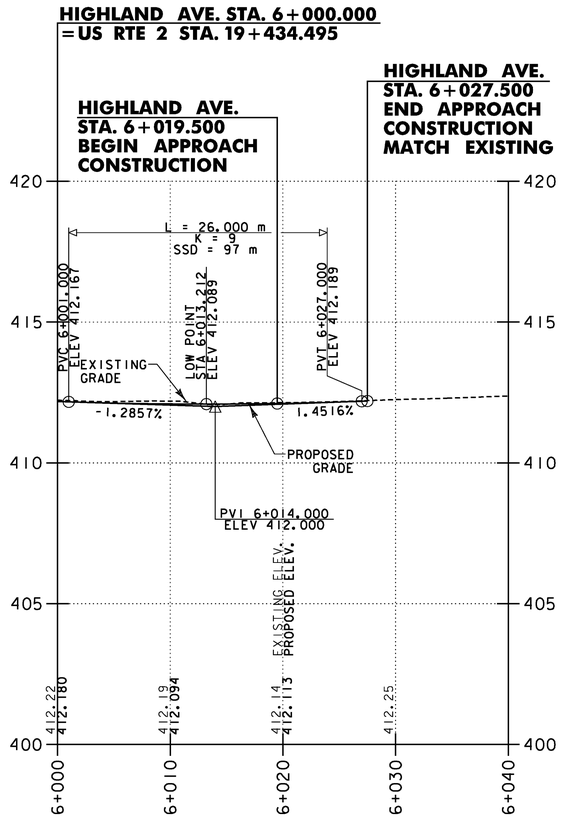

HIGHLAND AVE
6+000 TO 6+040

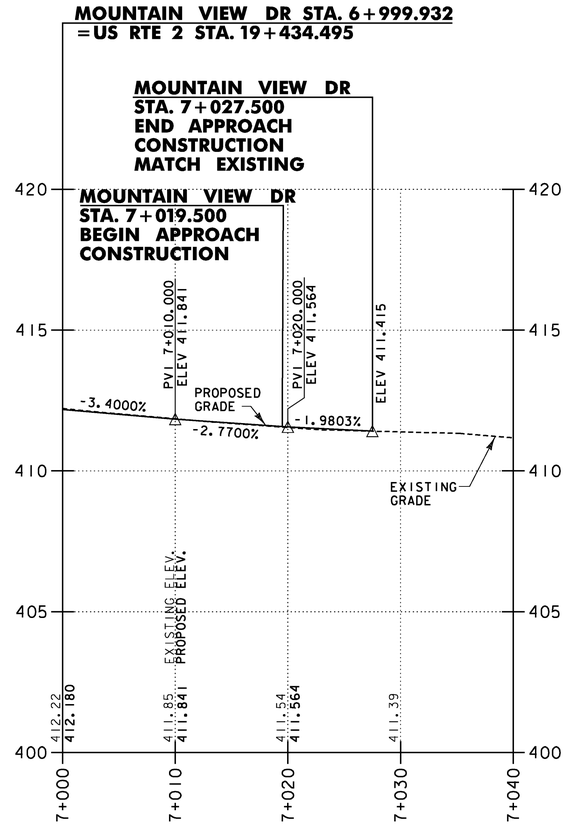

MOUNTAIN VIEW DRIVE
7+000 TO 7+040

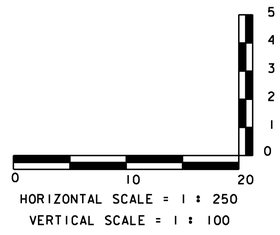

DATUM

VERTICAL	NAVD88
HORIZONTAL	NAD83(92)

3+000 - 3+060, 6+000 - 6+040, 7+000 - 7+040

PROJECT NAME:	DANVILLE
PROJECT NUMBER:	F EGC 028-3(32)

FILE NAME: ...\plotfiles\hghmvh_pr15.ptf	PLOT DATE: 1/18/2011
DESIGN SUPERVISOR: GARY SANTY	DRAWN BY: STANTEC
DESIGNED BY: STANTEC	CHECKED BY: STANTEC
HIGHLAND, MOUNTAINVIEW, HILL PRO-15	SHEET 88 OF 306

Stantec

1/18/2011 1:51:13 PM v:\1953\active\195300033.0192\highway\plotfiles\hghmvh_pr15.ptf

VTrans Metric

N

VT STATE PLANE GRID

MATCH LINE 19+070

19+080 19+100 19+120 19+140 19+160 19+180 19+200 19+220 19+240

US ROUTE 2

HILL ST.

PARK ST.

PEACHAM RD.

BRAINARD ST.

3+050 3+040 3+020 4+020 5+020

435.80 435.50 436.10 436.30 436.30 432.40 432.41 432.43 433.04 432.43 432.23 432.21 430.90

MATCH LINE – STA. 2+017 SEE SHEET GP-2

MATCH LINE – STA. 4+035 SEE SHEET GP-2

MATCH LINE – STA. 5+022 SEE SHEET GP-2

MATCH LINE 19+070

19+040 19+060 435.80

NOTES:
1. GRADING PLAN PROVIDED TO SHOW SPOT ELEVATIONS IN AREAS NOT ADEQUATELY COVERED BY ROADWAY CROSS SECTIONS. SEE ROADWAY CROSS-SECTION SHEETS FOR MORE INFORMATION.

LEGEND

----430---- EXISTING CONTOUR

——430—— PROPOSED CONTOUR

+436.30 SPOT ELEVATION

DATUM

VERTICAL	NAVD88
HORIZONTAL	NAD83(92)

0 10 20

SCALE 1:250

Stantec

PROJECT NAME:	DANVILLE
PROJECT NUMBER:	F EGC 028-3(32)
FILE NAME: ...\PlotFiles\023 grade01.ptf	PLOT DATE: 1/18/2011
DESIGN SUPERVISOR: GARY SANTY	DRAWN BY: STANTEC
DESIGNED BY: STANTEC	CHECKED BY: STANTEC
GRADING PLAN GP-1	SHEET 89 OF 306

1/18/2011 11:11:15 PM v:\1953\active\195300033.0192\Highway\PlotFiles\023 grade01.ptf

MATCH LINE – STA. 2+017 SEE SHEET GP–1

MATCH LINE – STA. 4+035 SEE SHEET GP–1

MATCH LINE – STA. 5+022 SEE SHEET GP–1

PARK ST.

PEACHAM RD.

BRAINARD ST.

430.90

434.5

432.5

433.5

NOTES:
1. GRADING PLAN PROVIDED TO SHOW SPOT ELEVATIONS IN AREAS NOT ADEQUATELY COVERED BY ROADWAY CROSS SECTIONS. SEE ROADWAY CROSS-SECTION SHEETS FOR MORE INFORMATION.

LEGEND

----430---- EXISTING CONTOUR

——430—— PROPOSED CONTOUR

+436.30 SPOT ELEVATION

N

VT STATE PLANE GRID

DATUM

VERTICAL NAVD88

HORIZONTAL NAD83(92)

0 10 20

SCALE 1:250

Stantec

PROJECT NAME: DANVILLE	
PROJECT NUMBER: F EGC 028-3(32)	
FILE NAME: ...\PlotFiles\024 grade02.ptf	PLOT DATE: 1/18/2011
DESIGN SUPERVISOR: GARY SANTY	DRAWN BY: STANTEC
DESIGNED BY: STANTEC	CHECKED BY: STANTEC
GRADING PLAN GP-2	SHEET 90 OF 306

1/8/2011 1:51:16 PM v:\1953\active\19530033.1092\Highway\PlotFiles\024 grade02.ptf

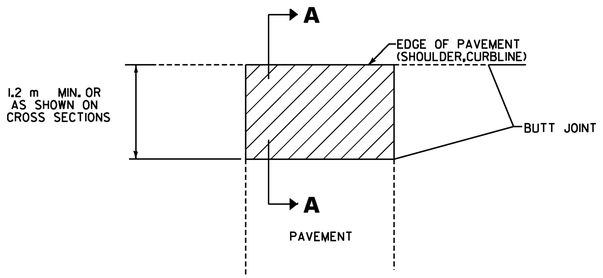

PLAN

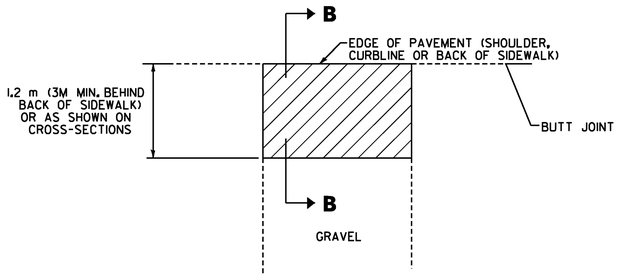

PLAN

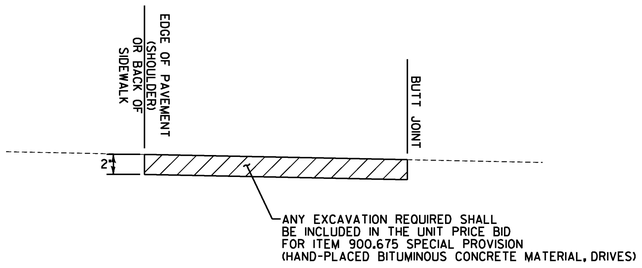

SECTION A–A

HANDWORK DETAILS FOR PAVED DRIVES

NOT TO SCALE

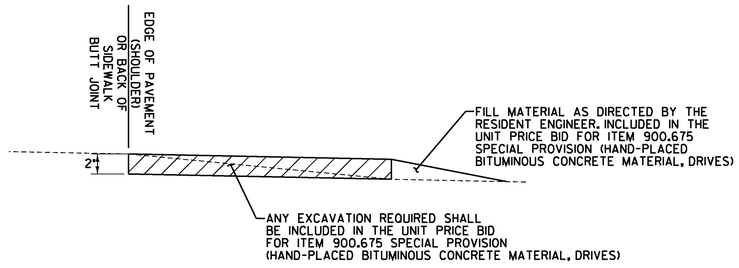

SECTION B–B

HANDWORK DETAILS FOR GRAVEL DRIVES

NOT TO SCALE

STATION	POSITION	900.675 (SM)	TYPE
MAINLINE			
18+523.7	LT	8.6	GRAV. RES.
18+648.4	LT	17.6	BIT. RES.
18+660.5	RT	16.1	GRAV. COM.
18+828.7	LT	12.8	GRAV. COM
18+906.0	RT	6.7	GRAV. RES.
18+961.8	RT	3.7	BIT. RES.
18+980.8	RT	2.7	BIT. RES.
19+017.3	RT	15.3	BIT. COM.
19+030.5	RT	6.5	BIT. COM.
19+048.4	RT	5.9	BIT. COM.
19+088.2	LT	3.8	GRAV. RES.
19+100.1	LT	10.4	BIT. COM.
19+258.7	RT	8.9	GRAV. RES.
19+384.8	RT	12.9	GRAV. RES.
19+560.7	RT	13.1	GRAV. RES.
19+851.1	RT	10.5	GRAV.COM
	WALDEN HILL ROAD		
1+036.6	RT	12.0	GRAV. RES.
	PARK STREET		
2+224.7	RT	7.1	BIT. RES.
	SMITH STREET		
5+074.2	RT	9.3	PARK ACCESS
5+060.7	LT	4.3	GRAV. COM
SUBTOTAL		188	
ROUNDING		2	
TOTAL		190	

DRIVE LOCATION SUMMARY ITEM 900.675 SPECIAL PROVISION (HAND-PLACED BITUMINOUS CONCRETE MATERIAL, DRIVES)

HANDWORK NOTES:

1. PAVING LIFT SHALL BE A MINIMUM OF 38mm AND A MAXIMUM OF 50mm.
2. THE COST OF PROVIDING AND PLACING SUBBASE MATERIAL, CLEANING EXISTING PAVED SURFACES, INCLUDING POWER EQUIPMENT, AND FOR FILLING JOINTS, CRACKS AND HOLES WILL NOT BE PAID DIRECTLY BUT WILL BE INCLUDED IN THE UNIT PRICE BID FOR ITEM 900.675 SPECIAL PROVISION (HAND-PLACED BITUMINOUS CONCRETE MATERIAL, DRIVES).
3. EXCAVATION NEEDED TO ACHIEVE PROPER DRIVE SLOPES WILL NOT BE PAID DIRECTLY BUT WILL BE INCLUDED IN THE UNIT PRICE BID FOR ITEM 900.675 SPECIAL PROVISION (HAND-PLACED BITUMINOUS CONCRETE MATERIAL, DRIVES).

LEGEND

ITEM 900.675 SPECIAL PROVISION (HAND-PLACED BITUMINOUS CONCRETE MATERIAL, DRIVES)

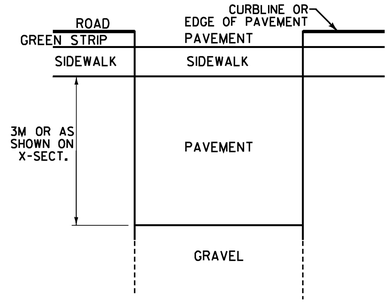

RECONSTRUCTION OF GRAVEL DRIVEWAY WITH SIDEWALK DETAIL

NOT TO SCALE

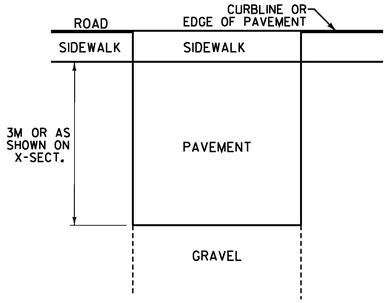

RECONSTRUCTION OF GRAVEL DRIVEWAY WITHOUT SIDEWALK DETAIL

NOT TO SCALE

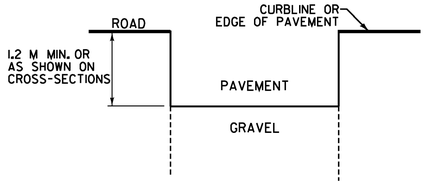

RECONSTRUCTION NOTES:

1. WORK TO RECONSTRUCT DRIVES (ALL DRIVES NOT LISTED IN TABLE ABOVE) SHALL BE PAID FOR UNDER ITEMS 203.15 COMMON EXCAVATION 301.35-SUBBASE OF DENSE GRADED CRUSHED STONE, 401.10 AGGREGATE SURFACE COURSE (FOR GRAVEL DRIVES) AND 490.30 SUPERPAVE BIT. CONC. PAVEMENT (FOR PAVED DRIVES).
2. DRIVES SHALL BE PAVED A MINIMUM OF 3M BEHIND SIDEWALK UNLESS SHOWN OTHERWISE ON PLANS TO PREVENT GRAVEL FROM ACCUMULATING ON SIDEWALK.

PROJECT NAME:	DANVILLE
PROJECT NUMBER:	F EGC 028-3(32)
FILE NAME: ...\plotfiles\drive-details.ptf	PLOT DATE: 1/18/2011
DESIGN SUPERVISOR: GARY SANTY	DRAWN BY: STANTEC
DESIGNED BY: STANTEC	CHECKED BY: STANTEC
DRIVE DETAIL SHEET DRD-1	SHEET 91 OF 306

1/18/2011 15:18 PM v:\1953\active\195310033_1092\highway\plotfiles\drive-details.ptf

Metric

CB100–CB101

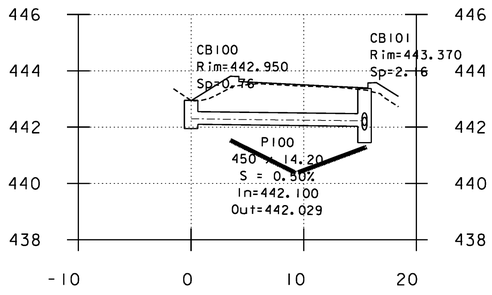

CB105 – CB104

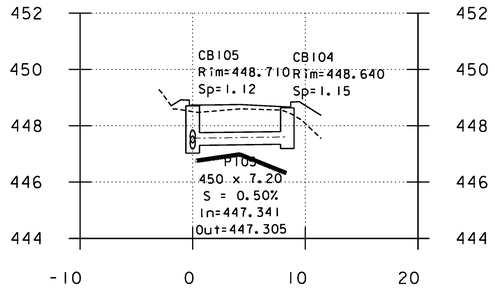

CB108 – CB107

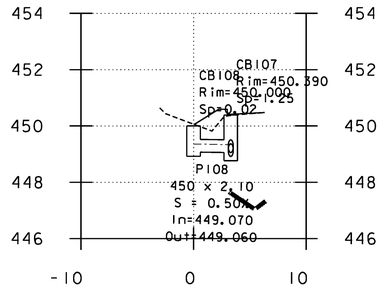

CB107 – CB106

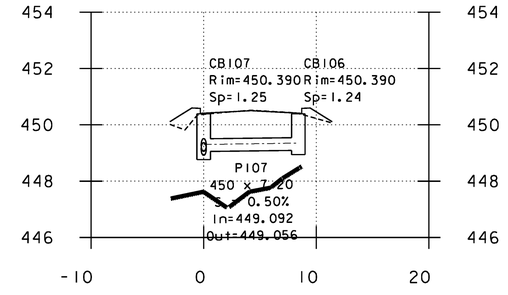

P101–CB107

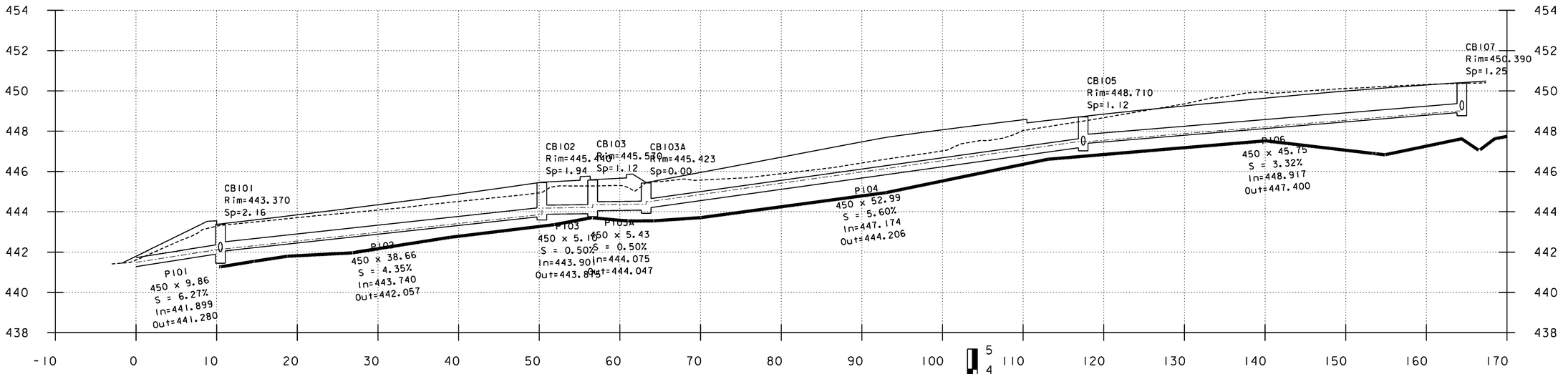

REPLACEMENT SHEETS ISSUED 10/5/11

NOTES:

1. FOR PLAN VIEW LOCATION OF DRAINAGE PIPE AND STRUCTURES, SEE CONSTRUCTION PLANS.

HORIZONTAL SCALE = 1 : 250
VERTICAL SCALE = 1 : 100

Stantec

PROJECT NAME: DANVILLE	
PROJECT NUMBER: F EGC 028-3(32)	
FILE NAME: ...\Plotfiles\drn-pro-1-8.ptf	PLOT DATE: 10/4/2011
DESIGN SUPERVISOR: GARY SANTY	DRAWN BY: STANTEC
DESIGNED BY: STANTEC	CHECKED BY: STANTEC
DRAINAGE PROFILE SHEET DPRO-1	SHEET 92 OF 306

10/4/2011 8:42:29 PM V:\1953\active\195300033.0092\Revised Plans\Plotfiles\drn-pro-1-8.ptf

CB249 – MH247A

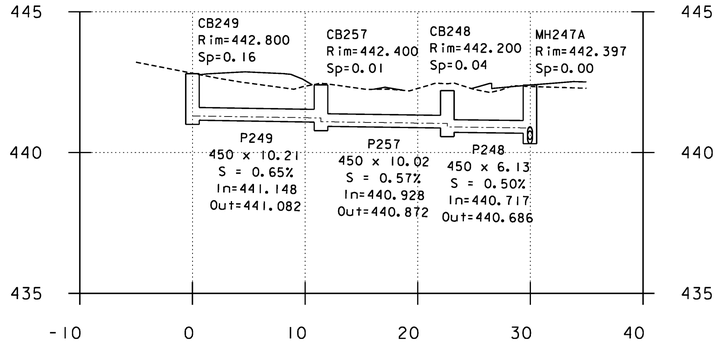

CONST PLAN 3
CB256–CB255
US RT 2 18+786 LT – 18+786 RT

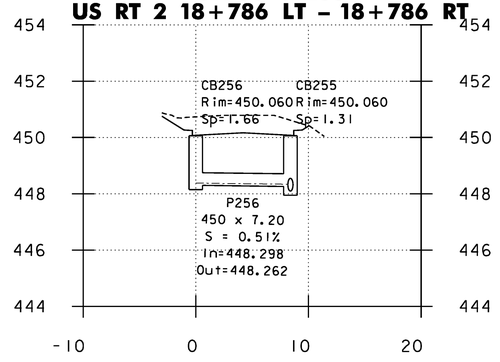

CONST PLAN 3
CB254–CB253
US RT 2 18+835 LT – 18+835 RT

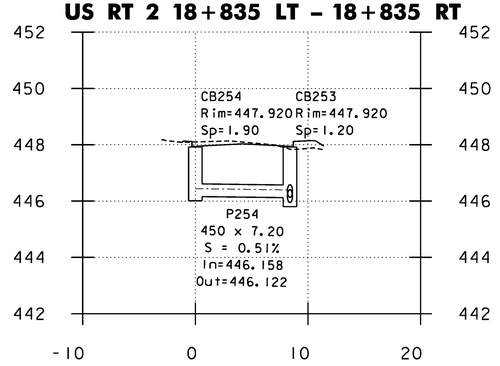

CB255–CB246

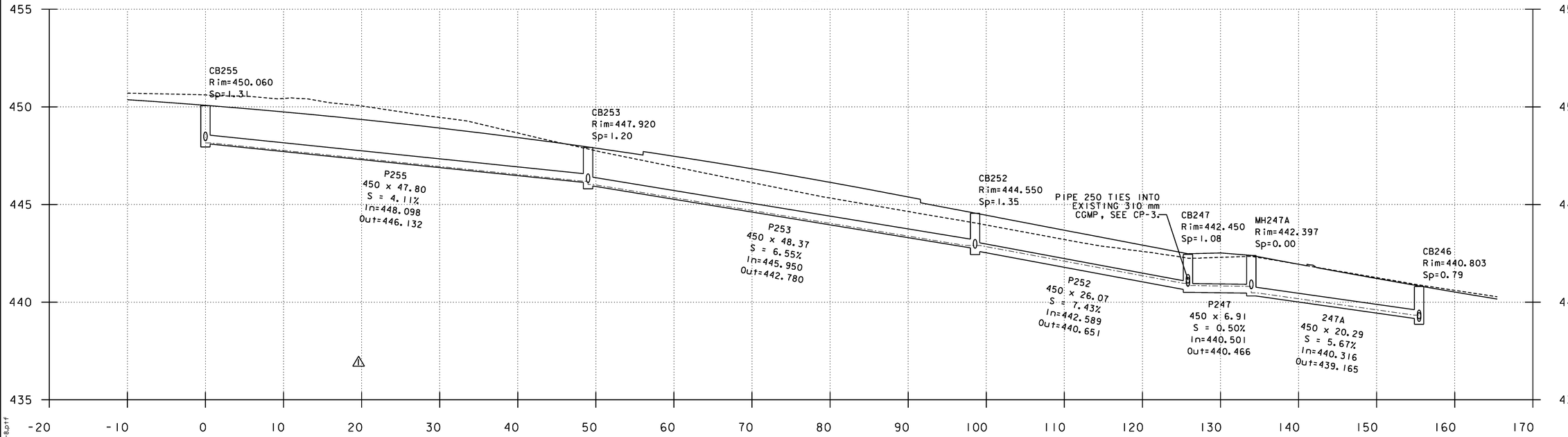

CONST PLAN 3
CB251–CB252
US RT 2 18+885 LT – 18+885 RT

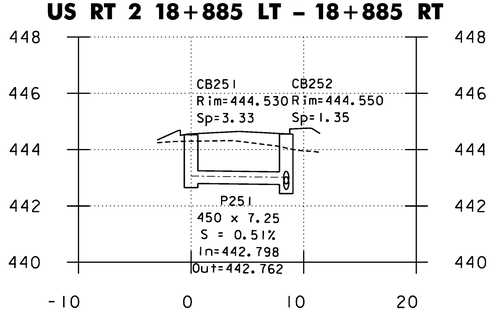

REPLACEMENT SHEETS ISSUED 10/5/11

NOTES:

1. FOR PLAN VIEW LOCATION OF DRAINAGE PIPE AND STRUCTURES, SEE CONSTRUCTION PLANS.

0 10 20
HORIZONTAL SCALE = 1 : 250
VERTICAL SCALE = 1 : 100

5 4 3 2 1 0

Stantec

PROJECT NAME: DANVILLE	
PROJECT NUMBER: F EGC 028-3(32)	
FILE NAME: ...\PlotFiles\drn-pro-1-8.ptf	PLOT DATE: 10/4/2011
DESIGN SUPERVISOR: GARY SANTY	DRAWN BY: STANTEC
DESIGNED BY: STANTEC	CHECKED BY: STANTEC
DRAINAGE PROFILE SHEET DPRO-2	SHEET 93 OF 306

10/4/2011 1:42:29 PM V:\1953\active\195300033.0092\Revised Plans\PlotFiles\drn-pro-1-8.ptf

CONST PLAN 4
CB244–CB243
US RT 2 18+989 LT – 18+989 RT

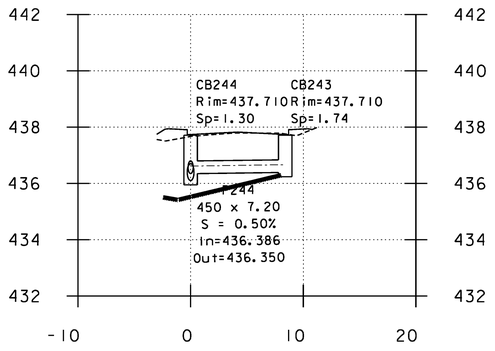

CONST PLAN 4
CB242–CB240
US RT 2 19+027 LT – 19+037 RT

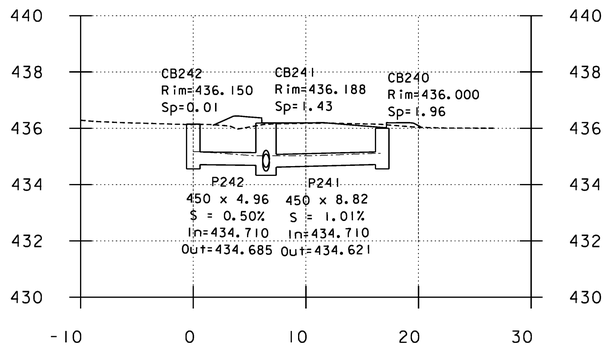

CB240A – CB240B

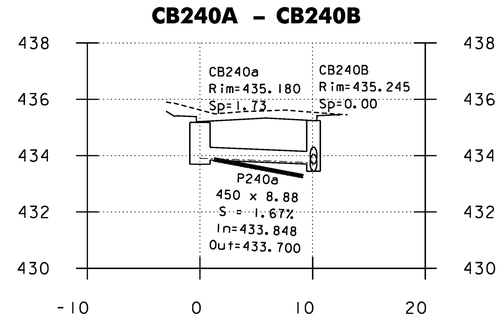

CB245 – CB240B

CONST PLAN 4 & 5

REPLACEMENT SHEETS ISSUED 10/5/11

HORIZONTAL SCALE = 1 : 250
VERTICAL SCALE = 1 : 100

NOTES:

1. FOR PLAN VIEW LOCATION OF DRAINAGE PIPE AND STRUCTURES, SEE CONSTRUCTION PLANS.

PROJECT NAME:	DANVILLE
PROJECT NUMBER:	F EGC 028-3(32)
FILE NAME: ...\PlotFiles\drn-pro-1-8.ptf	PLOT DATE: 10/4/2011
DESIGN SUPERVISOR: GARY SANTY	DRAWN BY: STANTEC
DESIGNED BY: STANTEC	CHECKED BY: STANTEC
DRAINAGE PROFILE SHEET DPRO-3	SHEET 94 OF 306

10/4/2011 1:42:30 PM V:\1953\active\195300033.0192\Revised Plans\PlotFiles\drn-pro-1-8.ptf

Metric

CB240B – CB224

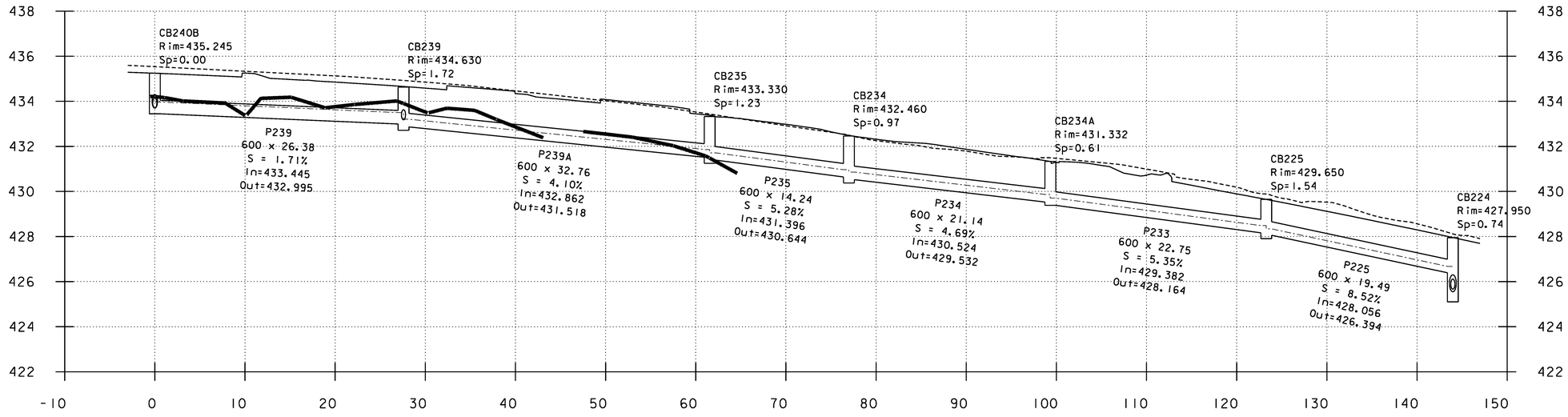

CB239 – CB238

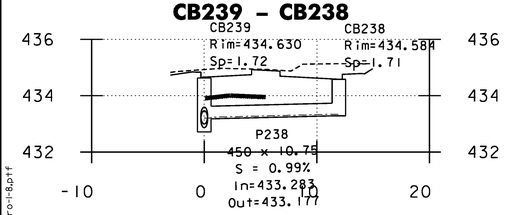

CB237 – CV209

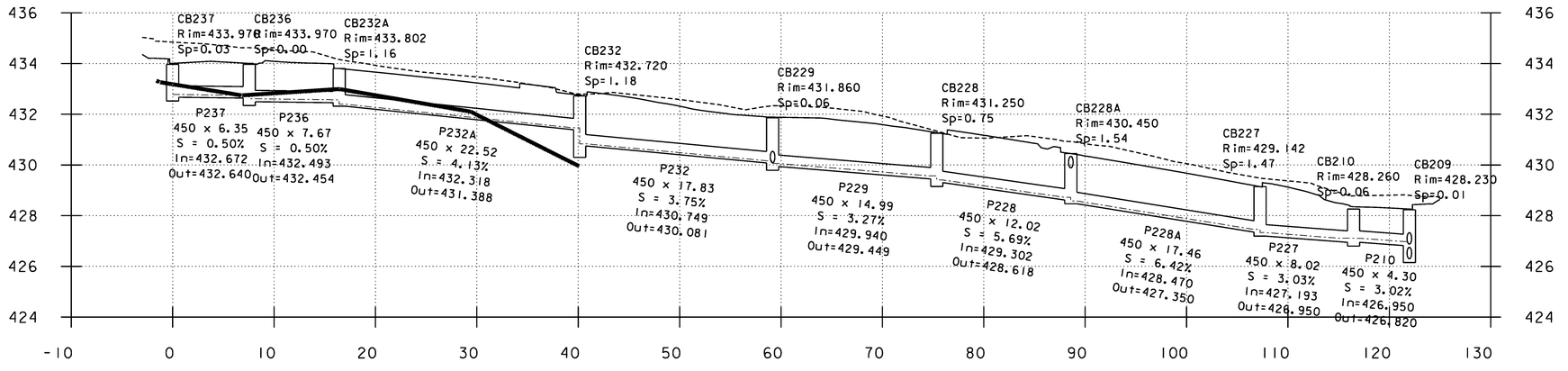

REPLACEMENT SHEETS ISSUED 10/5/11



HORIZONTAL SCALE = 1 : 250
VERTICAL SCALE = 1 : 100

NOTES:

1. FOR PLAN VIEW LOCATION OF DRAINAGE PIPE AND STRUCTURES, SEE CONSTRUCTION PLANS.

Stantec

PROJECT NAME: DANVILLE	
PROJECT NUMBER: F EGC 028-3(32)	
FILE NAME: ...\PlotFiles\drn-pro-1-8.ptf	PLOT DATE: 10/4/2011
DESIGN SUPERVISOR: GARY SANTY	DRAWN BY: STANTEC
DESIGNED BY: STANTEC	CHECKED BY: STANTEC
DRAINAGE PROFILE SHEET DPRO-4	SHEET 95 OF 306

10/4/2011 11:42:30 PM V:\1953\active\195300033.0092\Revised Plans\PlotFiles\drn-pro-1-8.ptf

Metric

CCB211–CB224

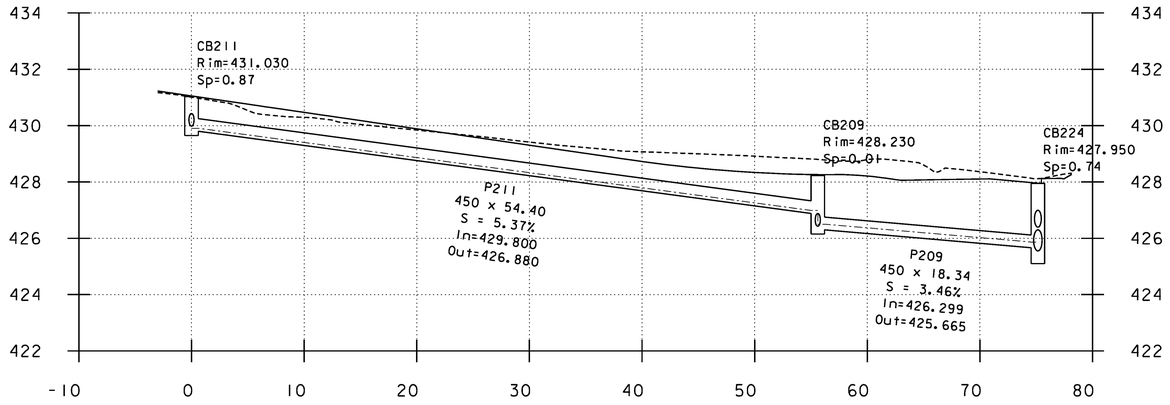

CB229 – CB231

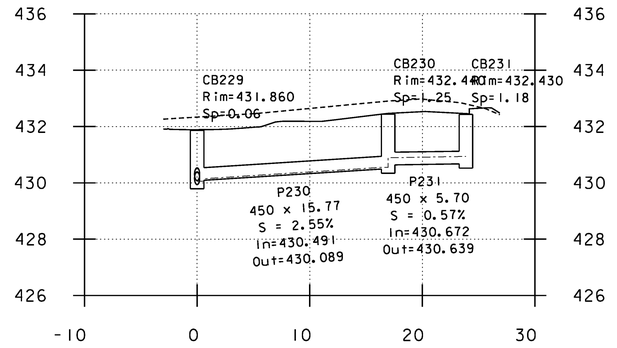

CB212 – CB211

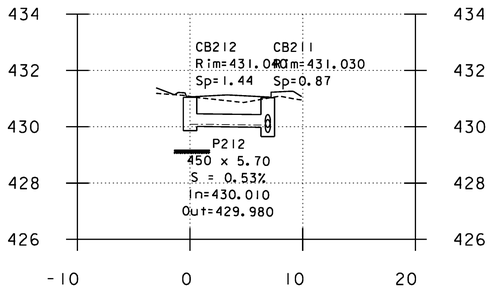

CB216 – CB214

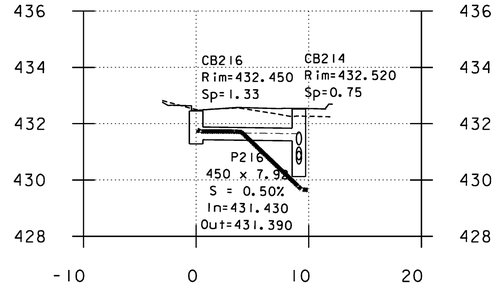

CB220 – CB221

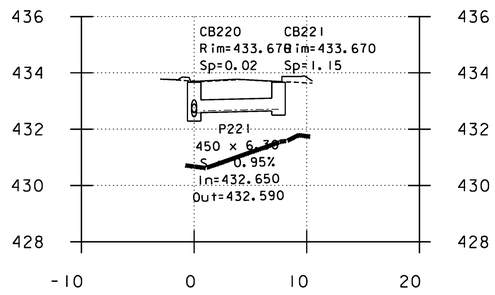

US Route 2

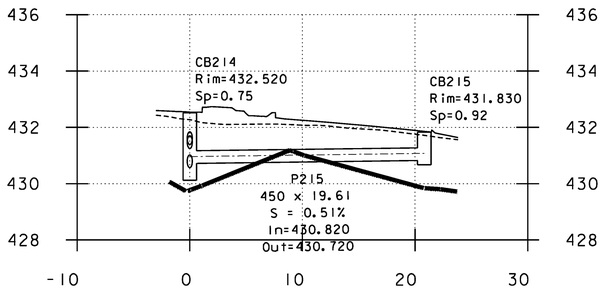

US Route 2

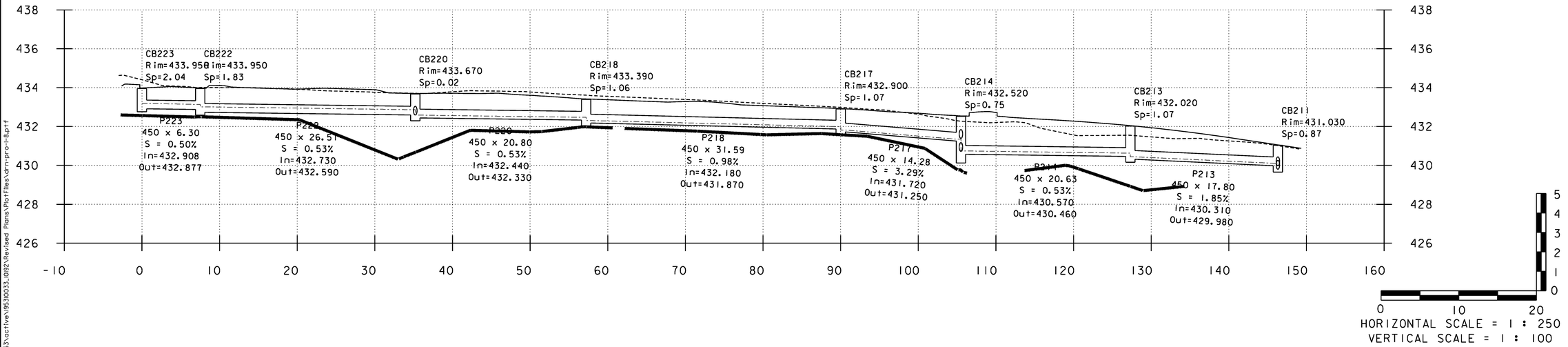

HORIZONTAL SCALE = 1 : 250
VERTICAL SCALE = 1 : 100

REPLACEMENT SHEETS ISSUED 10/5/11

NOTES:

1. FOR PLAN VIEW LOCATION OF DRAINAGE PIPE AND STRUCTURES, SEE CONSTRUCTION PLANS.

Stantec

PROJECT NAME: DANVILLE
PROJECT NUMBER: F EGC 028-3(32)

FILE NAME: ...\PlotFiles\drn-pro-1-8.ptf
DESIGN SUPERVISOR: GARY SANTY
DESIGNED BY: STANTEC
DRAINAGE PROFILE SHEET DPRO-5

PLOT DATE: 10/4/2011
DRAWN BY: STANTEC
CHECKED BY: STANTEC
SHEET 96 OF 306

10/4/2011 1:42:31 PM V:\1853\active\185300033.0092\Revised Plans\PlotFiles\drn-pro-1-8.ptf

CB224 – CB204A

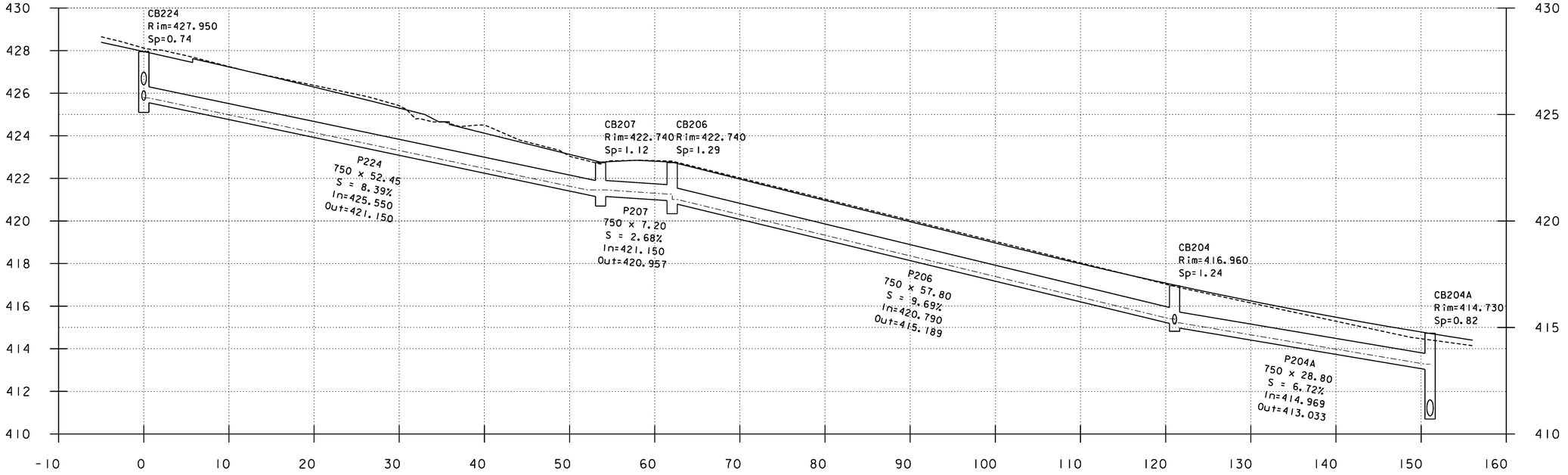

CB204A – CB307

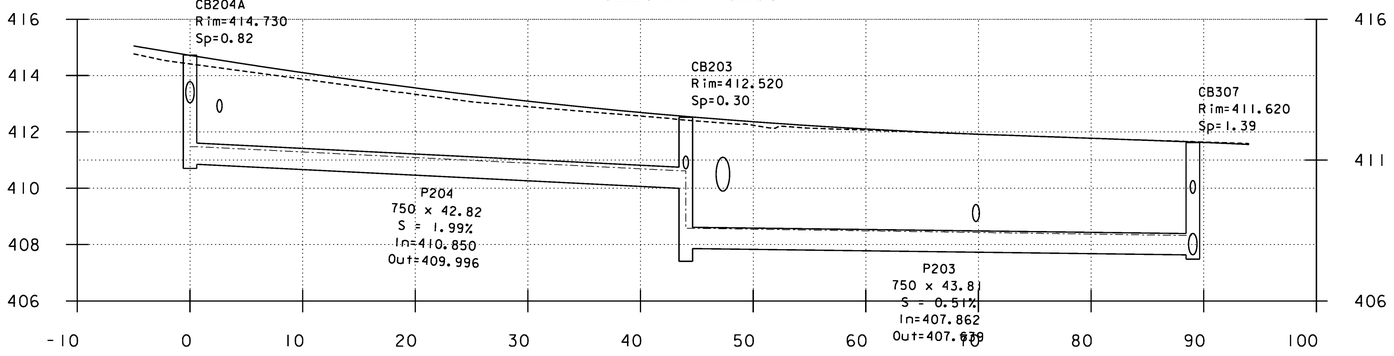

CB205 – CB204

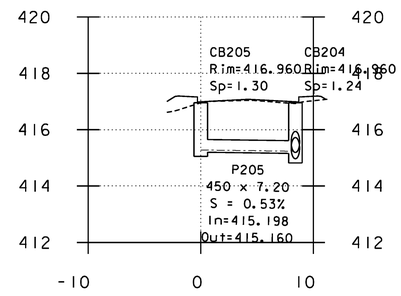

CCB202 – CB203

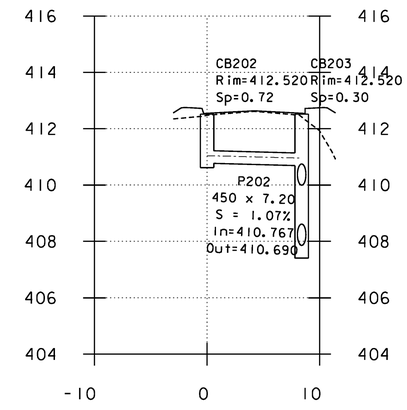

NOTES:

1. FOR PLAN VIEW LOCATION OF DRAINAGE PIPE AND STRUCTURES, SEE CONSTRUCTION PLANS.

REPLACEMENT SHEETS ISSUED 10/5/11

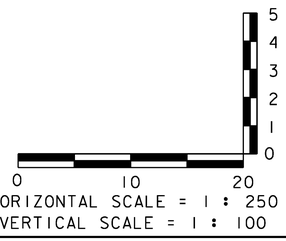

HORIZONTAL SCALE = 1 : 250
VERTICAL SCALE = 1 : 100

PROJECT NAME: DANVILLE	
PROJECT NUMBER: F EGC 028-3(32)	
FILE NAME: ...\PlotFiles\drn-pro-1-8.ptf	PLOT DATE: 10/4/2011
DESIGN SUPERVISOR: GARY SANTY	DRAWN BY: STANTEC
DESIGNED BY: STANTEC	CHECKED BY: STANTEC
DRAINAGE PROFILE SHEET DPRO-6	SHEET 97 OF 306

10/4/2011 1:42:31 PM V:\1853\active\185300033.002\Revised Plans\PlotFiles\drn-pro-1-8.ptf

P201A – P201

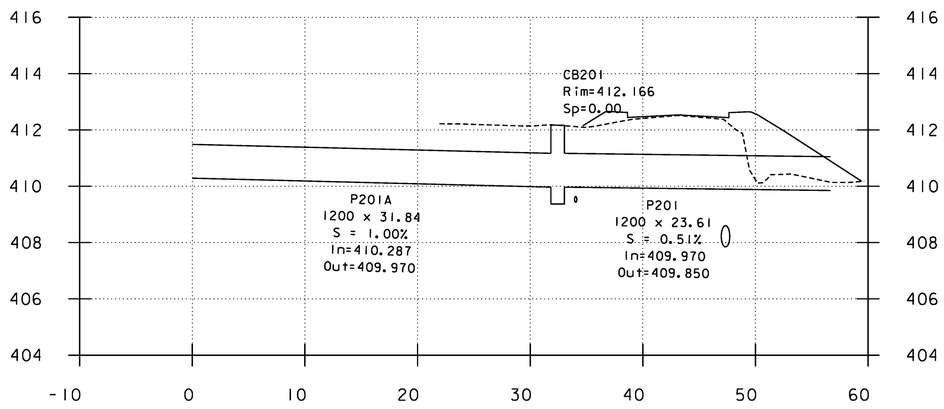

CB308 – CB307

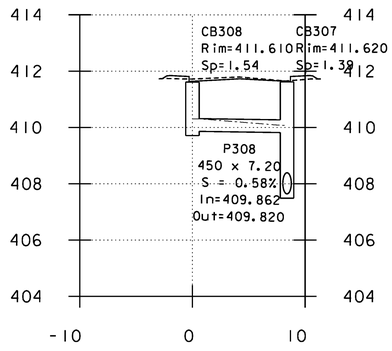

CB306 – CB305

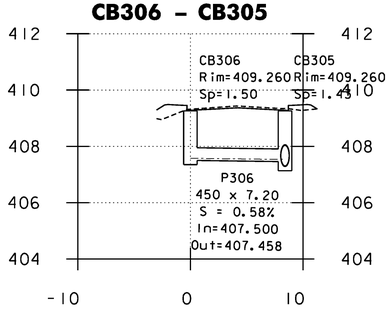

CB304 – CB303

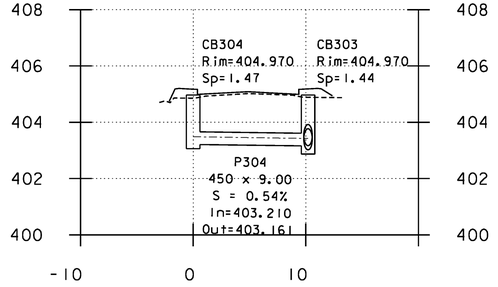

US Route 2

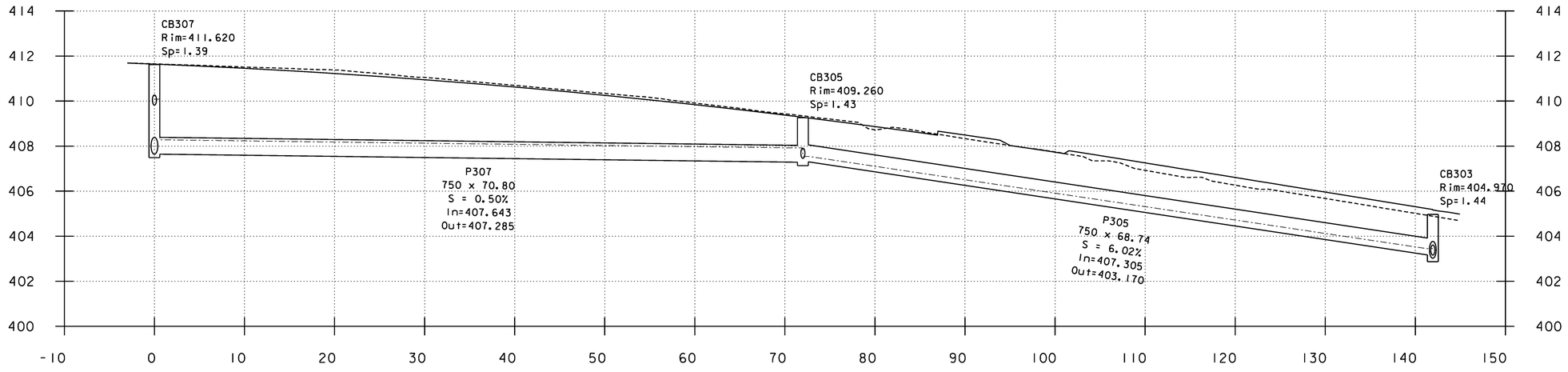

CB302 – CB301

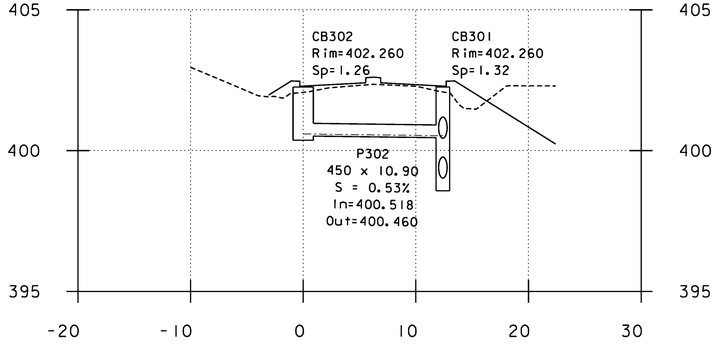

P300–P300A

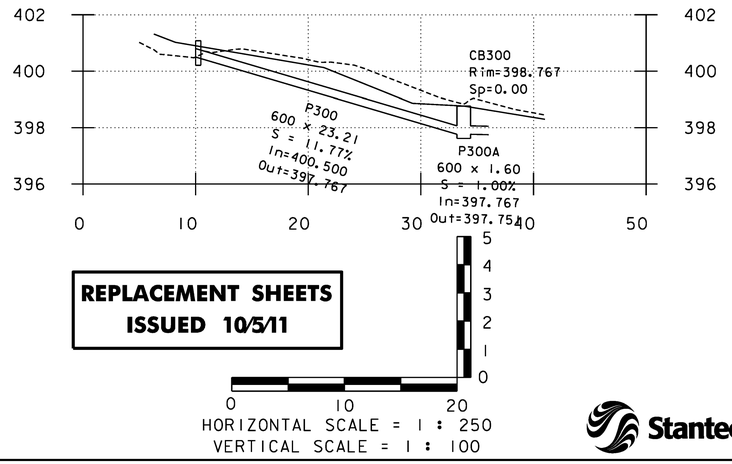

REPLACEMENT SHEETS ISSUED 10/5/11

HORIZONTAL SCALE = 1 : 250
VERTICAL SCALE = 1 : 100

NOTES:

1. FOR PLAN VIEW LOCATION OF DRAINAGE PIPE AND STRUCTURES, SEE CONSTRUCTION PLANS.

PROJECT NAME:	DANVILLE
PROJECT NUMBER:	F EGC 028-3(32)

FILE NAME: ...\PlotFiles\drn-pro-1-8.ptf	PLOT DATE: 10/4/2011
DESIGN SUPERVISOR: GARY SANTY	DRAWN BY: STANTEC
DESIGNED BY: STANTEC	CHECKED BY: STANTEC
DRAINAGE PROFILE SHEET DPRO-7	SHEET 98 OF 306

Stantec

10/4/2011 12:12:32 PM V:\1853\active\185300033.0092\Revised Plans\PlotFiles\drn-pro-1-8.ptf

CB303 – CB301B

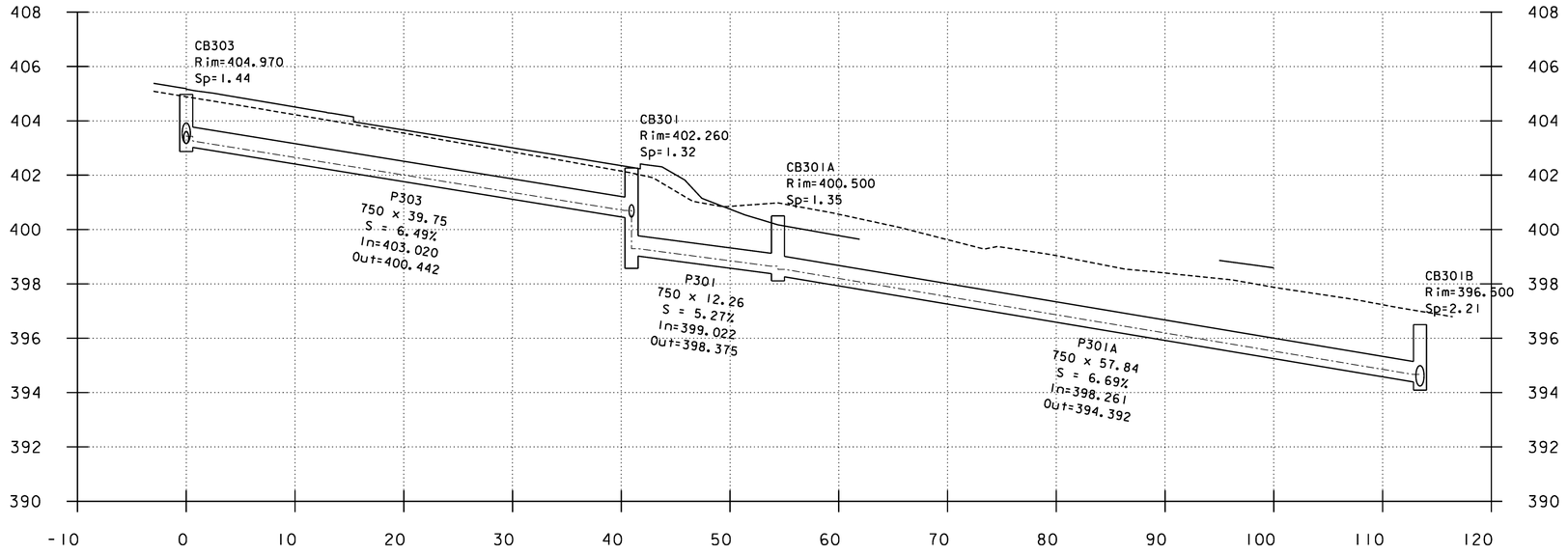

CONST PLAN 10
P316
US RT 2 19+844.1 RT – 19+858 RT

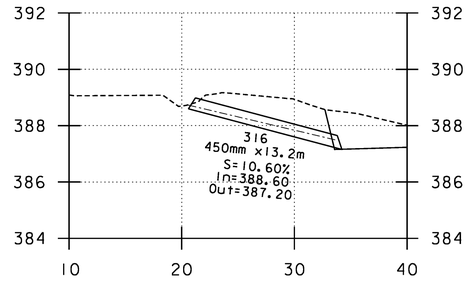

CB301B – P315

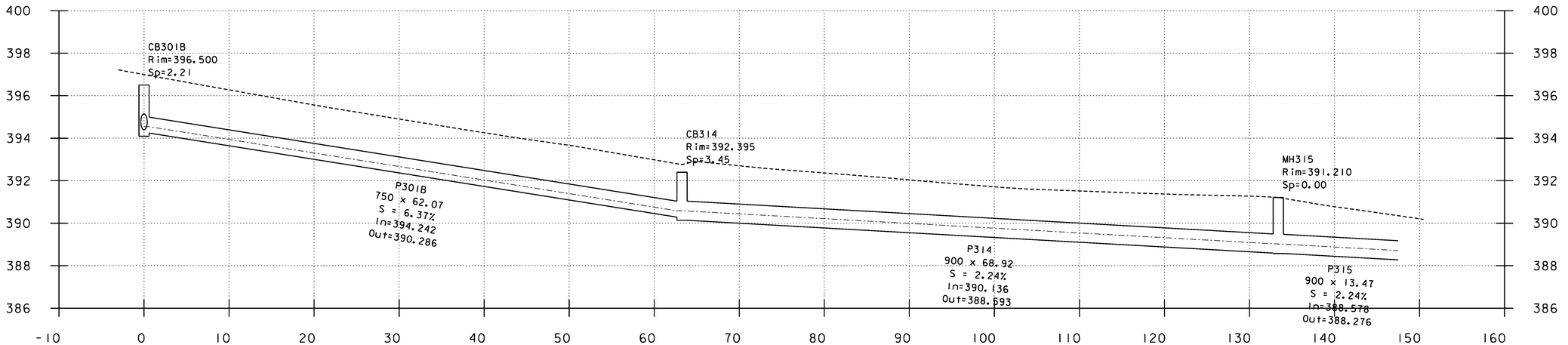

CONST PLAN 10
MH311
US RT 2 19+835 RT – 19+865.9 RT

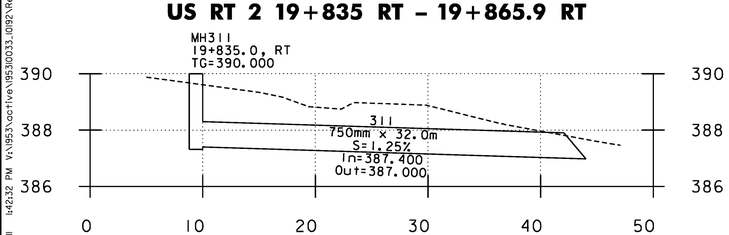

CONST PLAN 10
P313
US RT 2 19+846 RT – 19+866 RT

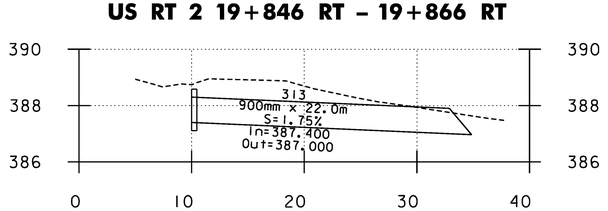

REPLACEMENT SHEETS ISSUED 10/5/11

HORIZONTAL SCALE = 1 : 250
VERTICAL SCALE = 1 : 100

PROJECT NAME:	DANVILLE
PROJECT NUMBER:	F EGC 028-3(32)
FILE NAME: ...\Plotfiles\drn-pro-1-8.ptf	PLOT DATE: 10/4/2011
DESIGN SUPERVISOR: GARY SANTY	DRAWN BY: STANTEC
DESIGNED BY: STANTEC	CHECKED BY: STANTEC
DRAINAGE PROFILE SHEET DPRO-8	SHEET 99 OF 306

Stantec

10/4/2011 1:42:32 PM V:\1953\active\195300033.0092\Revised Plans\Plotfiles\drn-pro-1-8.ptf

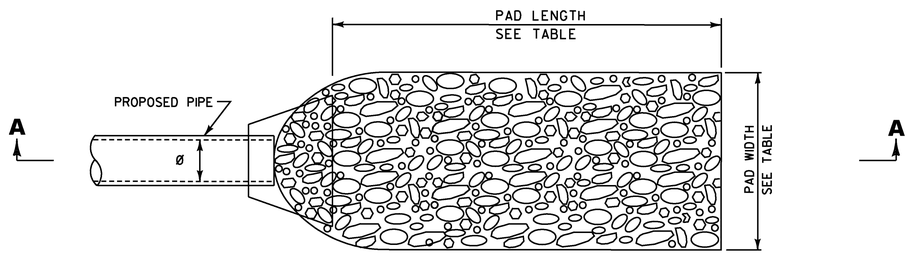

PLAN

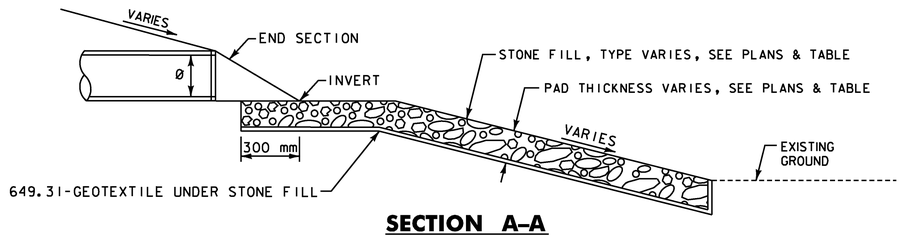

SECTION A-A

STORM DRAIN OUTLET PROTECTION				
OUTLET PIPE NO.	STONE TYPE	PAD LENGTH (m)	PAD WIDTH (m)	PAD THICKNESS (mm)
101A	I	21.0	7.0	300
200	II	1.8	2.4	600
311 & 313	II	33.0	5.0	600

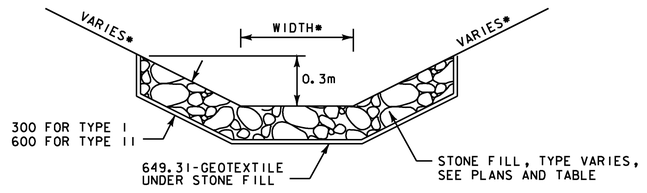

* SEE CROSS-SECTIONS FOR SWALE WIDTH AND SLOPE

STORM DRAIN OUTLET PROTECTION
NOT TO SCALE

STONE LINED SWALE
NOT TO SCALE

PROJECT NAME: DANVILLE
PROJECT NUMBER: F EGC 028-3(32)

FILE NAME: ...\PlotFiles\058 det_drn.ptf
DESIGN SUPERVISOR: GARY SANTY
DESIGNED BY: STANTEC
DRAINAGE DETAIL SHEET DD-1

PLOT DATE: 1/18/2011
DRAWN BY: STANTEC
CHECKED BY: STANTEC
SHEET 100 OF 306

Stantec

1/18/2011 1:51:31 PM v:\1953\active\195310033_10192\Highway\PlotFiles\058 det_drn.ptf

VTrans Metric

US RTE 2
TO ST. JOHNSBURY

US ROUTE 2

CONSTRUCTION ℄

19+828.00 US-2=
0+000.00 A-A

STA. 19+910.000
END APPROACH CONSTRUCTION
END BOX CUT AND WIDENING

6.00 E
6.00 E

VEGETATED TREATMENT SWALE 2-B
(SEE STORMWATER MAN. DETAILS SWM-3)

POND OUTLET STRUCTURE,
SEE STORMWATER MAN.
DETAILS SWM 2

EMERGENCY SPILLWAY, SEE
STORMWATER MANAGEMENT
DETAILS SWM 2

0+050 A-A=
0+040 B-B

WET
EXTENDED
DETENTION
POND

N73°28'28.6"E

N16°31'31.4"W

VEGETATED TREATMENT
SWALE 2-A, SEE
STORMWATER MANAGEMENT
DETAILS SWM 3

CUT-OFF TRENCH
CENTERLINE

MAINTENANCE ACCESS
ROAD, SEE STORMWATER
MAN. DETAILS SWM 2

APPROXIMATE EDGE
OF EXISTING ROAD

SEDIMENT
(FOREBAY

R=3M
(TYP.)

VT STATE PLANE GRID

POND SECTION B–B

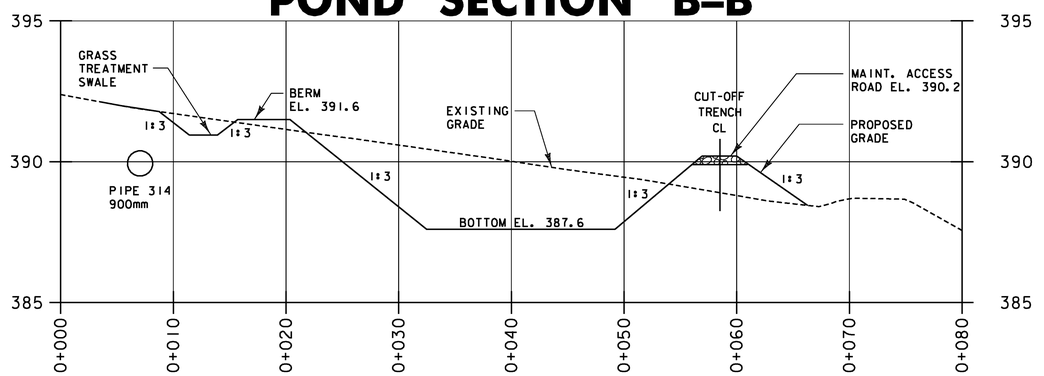

POND SECTION A–A

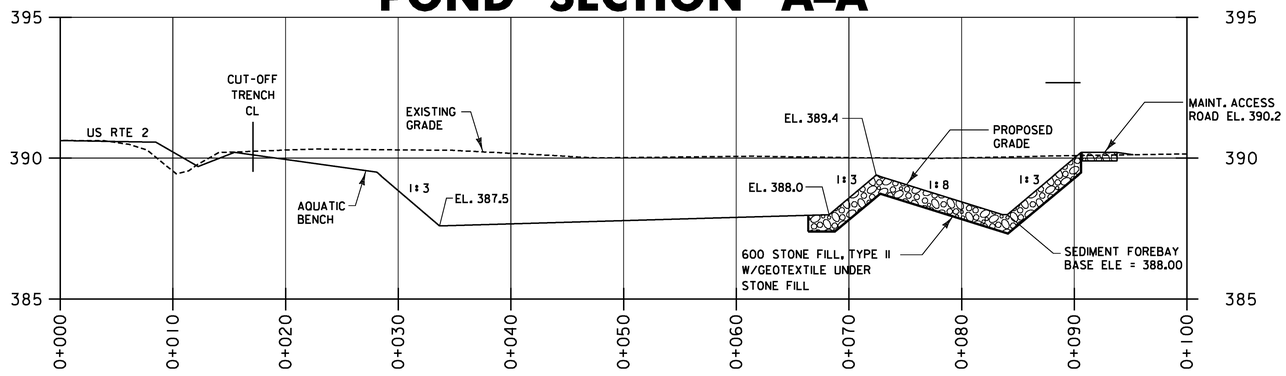

CUT-OFF TRENCH CENTERLINE LAYOUT POINT TABLE		
LAYOUT POINT	NORTHING	EASTING
LP1	212635.104	529274.885
LP2	212642.284	529279.495
LP3	212655.671	529276.500
LP4	212659.482	529276.901
LP5	212681.984	529276.063
LP6	212685.384	529274.992
LP7	212695.805	529270.689
LP8	212705.409	529262.966
LP9	212707.643	529258.041
LP10	212703.476	529242.876

SWALE 2A CENTERLINE LAYOUT POINT TABLE			
LAYOUT POINT	NORTHING	EASTING	ELEVATION
LP11	212699.112	529225.167	391.35
LP12	212695.000	529227.596	391.30
LP13	212680.796	529228.102	391.13
LP14	212667.434	529232.547	390.96
LP15	212649.281	529245.147	390.69
LP16	212641.564	529255.708	390.60

SWALE 2B CENTERLINE LAYOUT TABLE		
STATION	OFFSET	ELEVATION
19+860	13.9 RT	386.9
19+880	13.5 RT	386.0
19+900	14.2 RT	385.2
19+920	14.2 RT	384.3
19+940	14.8 RT	383.5
19+960	18.6 RT	382.6

0 10 20
SCALE 1:250

Stantec

PROJECT NAME: DANVILLE
PROJECT NUMBER: F EGC 028-3(32)

FILE NAME: ...\PlotFiles\059 swm plan-1.ptf
DESIGN SUPERVISOR: GARY SANTY
DESIGNED BY: STANTEC
STORMWATER MAN. DETAILS SWM 1

PLOT DATE: 1/18/2011
DRAWN BY: STANTEC
CHECKED BY: STANTEC
SHEET 101 OF 306

1/18/2011 1:51:33 PM v:\1953\active\195300033_i092\Highway\PlotFiles\059 swm plan-1.ptf

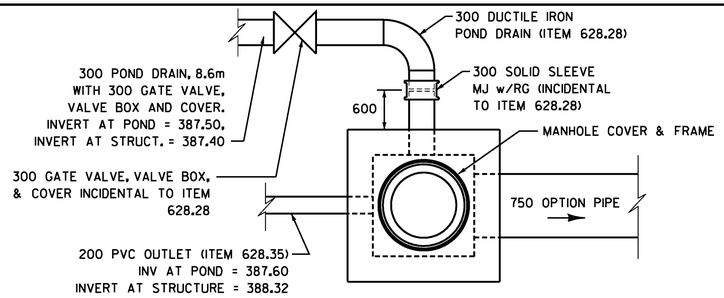

CATCH BASIN – WET POND OUTLET (TOP VIEW)

NOT TO SCALE

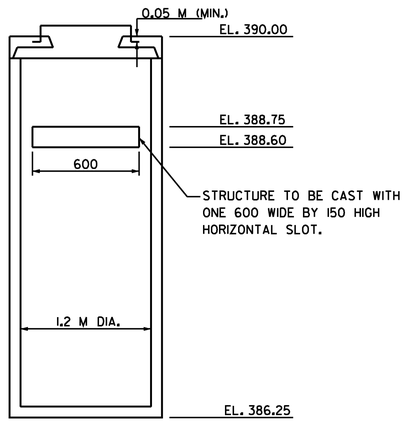

CATCH BASIN – WET POND OUTLET (FRONT VIEW)

NOT TO SCALE

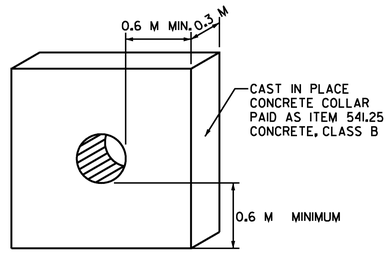

ANTI-SEEP COLLAR

NOT TO SCALE

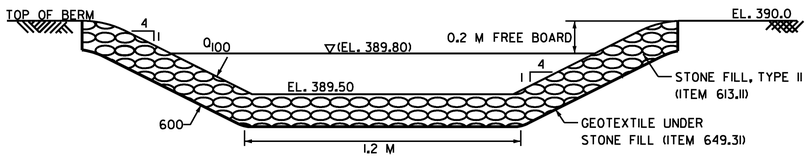

SECTION B–B AT SPILLWAY

NOT TO SCALE

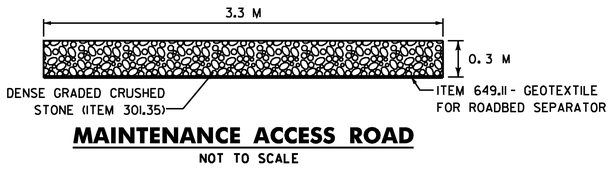

MAINTENANCE ACCESS ROAD

NOT TO SCALE

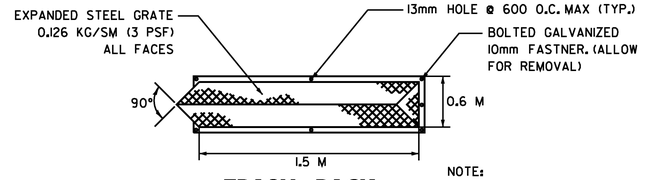

TRASH RACK

NOT TO SCALE

NOTE:
1. ALL SURFACES TO BE COATED WITH ERC COLD GALVANIZED COMPOUND

2. TRASH RACK TO BE INCIDENTAL TO DRAINAGE MANHOLE 311.

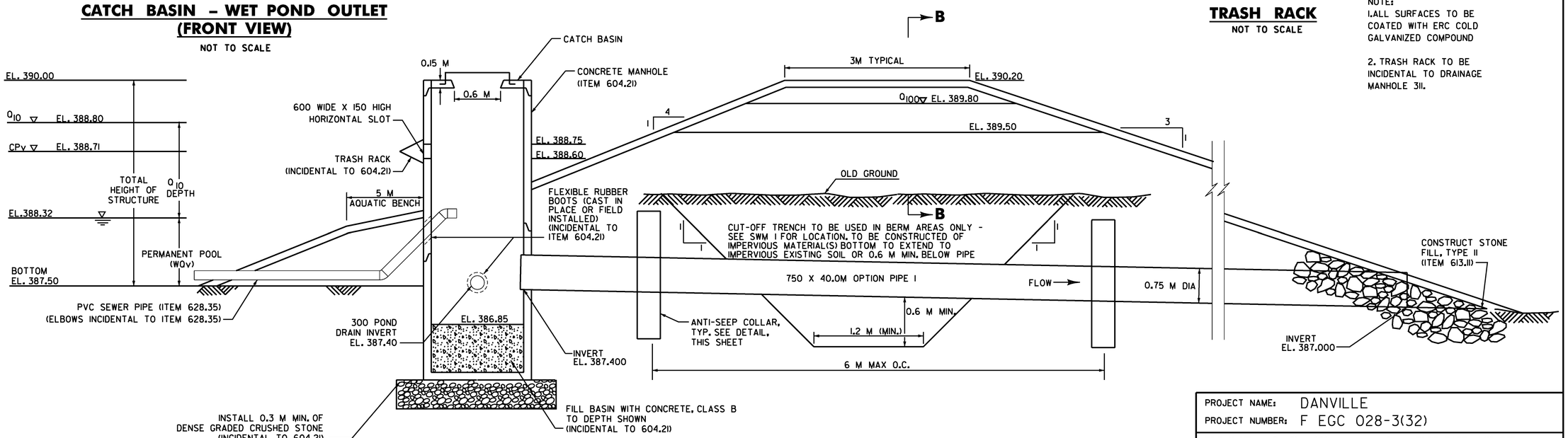

WET POND SECTION

NOT TO SCALE

GENERAL NOTES:

1. THE WET POND AREA SHALL BE CLEARED OF ALL TREES, ROOTS, STUMPS, BOULDERS AND SOD TO A MINIMUM DEPTH OF 2' BELOW FINAL GRADE.

2. CONSTRUCT BERM USING EMBANKMENT MATERIAL FREE OF SOD, ROOTS, FROZEN MATERIAL, LARGE ROCKS, OR OTHER OBJECTIONABLE MATERIAL. COMPACT AS PER SPECIFICATIONS.

3. CONSTRUCT CUT OFF TRENCH AT CENTERLINE OF BERM OR SLIGHTLY UPSTREAM. FILL WITH IMPERVIOUS BORROW TO REDUCE SEEPAGE AND STABILIZE THE BERM. COMPACT MATERIAL TO AT LEAST 95% OF MAXIMUM DENSITY. PAID FOR AS ITEM 900.608 - SPECIAL PROVISION (CLAY BORROW).

4. CATCH BASIN WET POND OUTLET TO BE PRECAST WITH HOLE SIZES AND SPACING AS SHOWN WITH ANY FIELD ADJUSTMENTS APPROVED BY THE ENGINEER. HOLES SHALL BE CAST WITH THE SECTION TO AVOID POSSIBLE RUST STAINS FROM EXPOSED REINFORCEMENT.

5. SEED AND MULCH ALL EARTH SLOPES WITHIN 24 HOURS OF COMPLETION OF FINAL GRADING. STABILIZE THE INLET AREA WITH REQUIRED EROSION CONTROL MEASURES.

6. REMOVE ACCUMULATED SEDIMENT FROM WET EXTENDED DETENTION POND AT COMPLETION OF PROJECT.

7. ANTI-SEEP COLLARS SHALL BE INSTALLED AS SHOWN TO RESIST FLOW ALONG THE OUTSIDE OF THE PIPE. COLLARS SHOULD PROTECT A MINIMUM OF 0.6 M FROM THE PIPE. MAXIMUM SPACING OF COLLARS IS 6 M.

PROJECT NAME:	DANVILLE
PROJECT NUMBER:	F EGC 028-3(32)
FILE NAME: ...\PlotFiles\060 swm-det1.ptf	PLOT DATE: 1/18/2011
DESIGN SUPERVISOR: GARY SANTY	DRAWN BY: STANTEC
DESIGNED BY: STANTEC	CHECKED BY: STANTEC
STORMWATER MAN. DETAILS SWM 2	SHEET 102 OF 306

1/18/2011 1:51:35 PM v:\1953\active\195310033.0092\highway\PlotFiles\060 swm-det1.ptf

VEGETATED TREATMENT SWALE																
SWALE NAME	SYSTEM	LOCATION	PRE-TREATMENT LENGTH (m)	SWALE LENGTH (m)	SWALE WIDTH (m)	SWALE DEPTH (m)	SIDE SLOPES	UPSTREAM INVERT	DOWN STREAM INVERT	AVERAGE SLOPE (%)	ADDITIONAL CHECK DAMS		WQ_v (CM)	V_{WQv} (mps)	WQ_v FLOW DEPTH (M)	10 YEAR FLOW DEPTH (M)
											YES	NO				
SWALE 1	1	18+390 - 18+520 RT	5	130	0.6	0.6	3:1	441.20	437.90	2.5		X	0.007	0.18	0.12	0.27
SWALE 2-A	2	19+787 - 19+803 RT	6	69	2.4	0.6	3:1	391.35	390.60	1.1		X	106.07	0.12	0.08	0.23
SWALE 2-B	2	19+858 - 19+979 RT	3.5	117	1.2	0.6	3:1	387.00	381.96	4.3		X	30.92	0.15	0.04	0.13

NOTES:
1. EXISTING STONE FILL SHALL BE REMOVED AND REPLACED WITH TOPSOIL, SEED, EROSION MATTING AND MULCH IN SWALE 1. CONTRACTOR SHALL MATCH EXISTING GRADES WHEN REPLACING STONE FILL. A PRETREATMENT POOL LINED WITH STONE FILL, TYPE I SHALL BE CONSTRUCTED AS SHOWN IN THE DETAIL ON THIS SHEET.
2. PRETREATMENT POOL SHALL BE VEGETATED FOR SWALES 2-A AND 2-B.
3. EXCAVATION FOR VEGETATED TREATMENT SWALES INCLUDING PRE-TREATMENT SHALL BE PAID FOR UNDER ITEM 204.20, "TRENCH EXCAVATION OF EARTH."

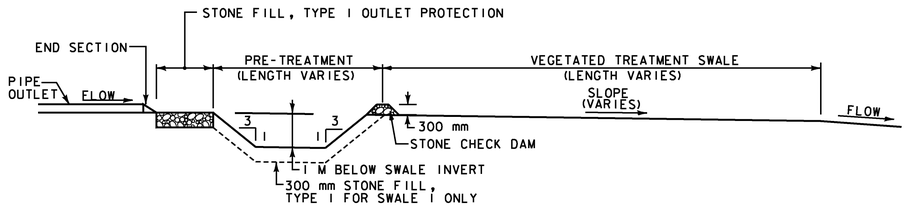

ELEVATION

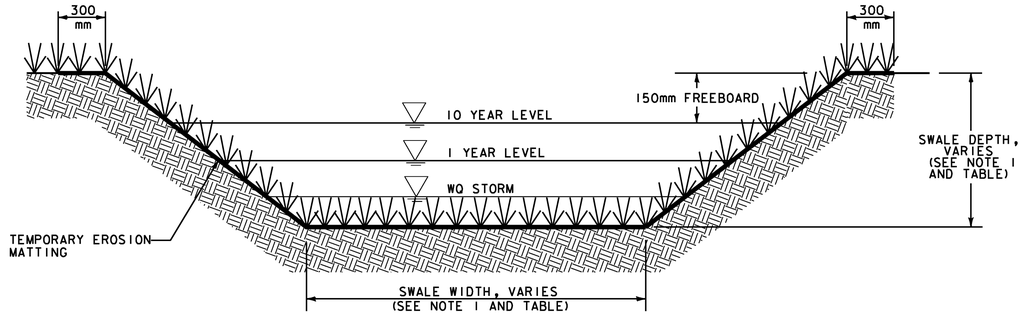

SECTION A–A

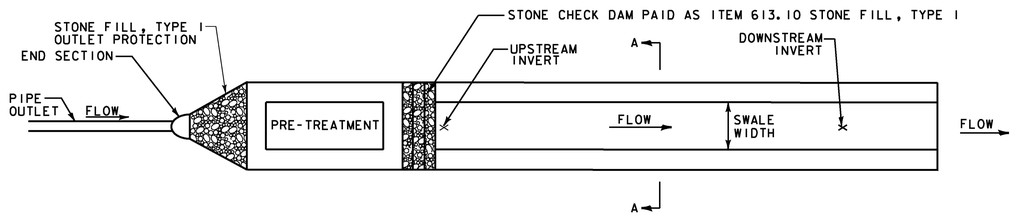

PLAN

VEGETATED TREATMENT SWALE

NOT TO SCALE

PROJECT NAME:	DANVILLE
PROJECT NUMBER:	F EGC 028-3(32)
FILE NAME: ...\PlotFiles\06lswm-det2.ptf	PLOT DATE: 1/18/2011
DESIGN SUPERVISOR: GARY SANTY	DRAWN BY: STANTEC
DESIGNED BY: STANTEC	CHECKED BY: STANTEC
STORMWATER MAN. DETAILS SWM 3	SHEET 103 OF 306

Stantec

1/18/2011 11:36 PM v:\1853\active\185300033_0192\Highway\PlotFiles\06lswm-det2.ptf

VAOT Metric

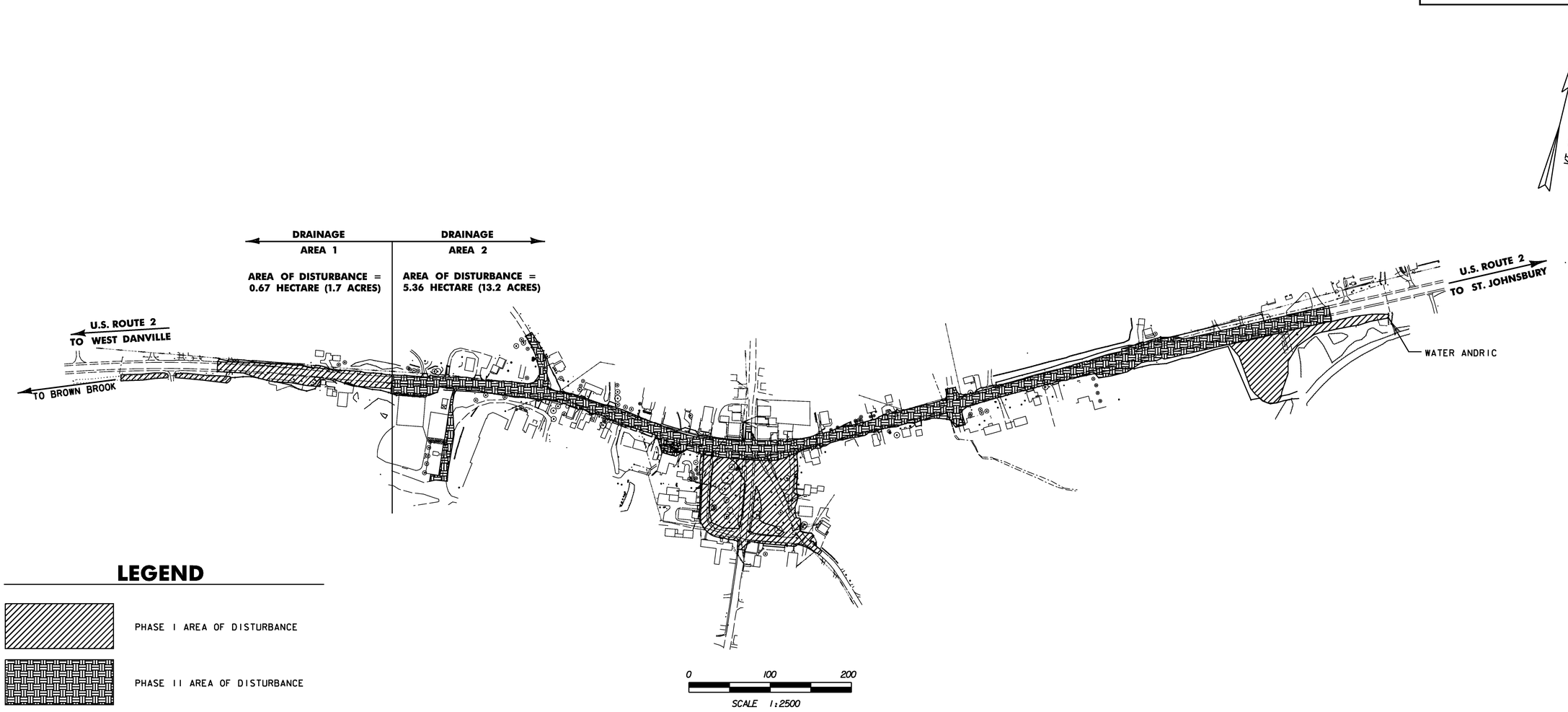

LEGEND

PHASE I AREA OF DISTURBANCE

PHASE II AREA OF DISTURBANCE

GENERAL CONSTRUCTION PHASING:

PHASE I: CONSTRUCT DRAINAGE AND UTILITIES INCLUDING
STORM WATER DETENTION
CONSTRUCT VILLAGE GREEN ROADWAY IMPROVEMENTS

PHASE II: CONSTRUCT ROADWAY IMPROVEMENTS
COMPLETE VILLAGE GREEN IMPROVEMENTS
SEE TRAFFIC CONTROL PLANS FOR
VARIOUS STAGES OF TRAFFIC CONTROL
STAGE 2 - CONSTRUCT SOUTH SIDE OF ROAD
STAGE 3 - CONSTRUCT NORTH SIDE OF ROAD
STAGE 4 - CONSTRUCT ISLANDS

PHASE III: INSPECT AND CLEAN ALL COMPONENTS OF STORM WATER SYSTEM INCLUDING POND. REMOVE ALL REMAINING TEMP. EPSC MEASURES. ESTABLISH PERMANENT VEGETATION ON ALL REMAINAING DISTURBED AREAS.

GENERAL:

1. CONSTRUCTION IS EXPECTED TO BE SUBSTANTIALLY COMPLETE WITHIN TWO CONSTRUCTION SEASONS, WITH PLANTING OF TREES AND SHRUBS IN THE SPRING OF THE THIRD CONSTRUCTION SEASON.

2. SEE EPSC NARRATIVE SHEETS FOR CONTRACTOR RESPONSIBILITIES, LIMITATIONS AND PROHIBITIONS DURING CONSTRUCTION.

1/18/2011 1:51:39 PM v:\1953\active\19530033.1092\Highway\PlotFiles\32 phasing.ptf

Stantec

PROJECT NAME: DANVILLE	
PROJECT NUMBER: F EGC 028-3(32)	
FILE NAME: ...\PlotFiles\32 phasing.ptf	PLOT DATE: 1/18/2011
DESIGN SUPERVISOR: GARY SANTY	DRAWN BY: STANTEC
DESIGNED BY: STANTEC	CHECKED BY: STANTEC
EPSC PHASING PLAN EPH-1	SHEET 104 OF 306

VTrans Metric

EPSC PLAN NARRATIVE

PROJECT DESCRIPTION:

1. THIS PROJECT INVOLVES GRADING, DRAINAGE, SUBBASE AND PAVEMENT FOR THE REHABILITATION AND ENHANCEMENT OF A PORTION OF US ROUTE 2 IN THE TOWN OF DANVILLE, GENERALLY ALONG EXISTING ALIGNMENT. THE PROJECT BEGINS APPROXIMATELY 6.518 KILOMETERS EAST OF THE CABOT-DANVILLE TOWN LINE AND EXTENDS EASTERLY APPROXIMATELY 1.145 KILOMETERS.

NOTE: AREA OF DISTURBANCE INCLUDES LIMITS OF EARTH DISTURBANCE WITHIN THE PROJECT AREA, AS WELL AS WASTE, BORROW AND STAGING AREAS, AND OTHER EARTH DISTURBING ACTIVITIES WITHIN OR DIRECTLY ADJACENT TO THE PROJECT LIMITS AS SHOWN ON THE ATTACHED EPSC PLAN.

2. TOTAL AREA OF DISTURBANCE AS SHOWN ON THE ATTACHED EPSC PLAN IS APPROXIMATELY 6.0 HECTARE (14.9 ACRES).

3. IT IS ANTICIPATED THAT THIS PROJECT WILL BE SUBSTANTIALLY COMPLETE WITHIN TWO CONSTRUCTION SEASONS, WITH PLANTING OF TREES AND SHRUBS IN THE SPRING OF THE THIRD CONSTRUCTION SEASON.

SITE INVENTORY:

4. TOPOGRAPHY: EXISTING AND PROPOSED ROLLING GRADES ALONG THIS SECTION OF US ROUTE 2 VARY FROM 0% TO 10%. THE CENTER OF TOWN, VILLAGE GREEN AND SURROUNDING STREETS ARE GENERALLY FLAT WITH THE EASTERLY AND WESTERLY APPROACHES TO TOWN (US ROUTE 2) STEEPER. THERE ARE MANY COMMERCIAL AND RESIDENTIAL BUILDINGS WITHIN THE PROJECT LIMITS THAT ARE TYPICAL OF AN URBAN SETTING. THE CENTER OF TOWN CONSISTS OF MOSTLY IMPERVIOUS AREAS (BUILDINGS, PARKING LOTS, PAVED AND GRAVEL DRIVEWAYS) WHILE THE APPROACHES ARE MAINLY LAWN AND GRASSY AREAS WITH ROADSIDE DITCHES.

5. DRAINAGE, WATERWAYS, BODIES OF WATER, AND PROXIMITY TO NATURAL OR MAN-MADE WATER FEATURES: THE INITIAL 200 METERS OF THE PROJECT DRAINS WESTERLY THROUGH A SERIES OF STONE-LINED DITCHES, UNDERGROUND STORM DRAIN SYSTEM, VEGETATED SWALES AND OFF PROJECT INTO EXISTING STONE DITCHES THAT FLOW INTO A SWAMPY AREA IMMEDIATELY SOUTHWEST OF THE PROJECT. THE REMAINING PROJECT DRAINS TO THE EAST THROUGH UNDERGROUND STORM DRAIN CONDUITS, ROADSIDE DITCHES AND VEGETATED SWALES. THE STORMWATER EVENTUALLY EMPTIES INTO A PROPOSED WET POND AT THE SOUTHEAST PROJECT LIMIT. THE WET POND DRAINS THROUGH AN OUTLET STRUCTURE (CONTROLLING THE RATE OF RUNOFF), INTO A VEGETATED SWALE AND OUTLETTING INTO AN EXISTING UN-NAMED TRIBUTARY TO THE WATER ANDRIC.

AN EXISTING DRAINAGE SYSTEM AT APPROXIMATE STATION 19+420 CONVEYS OFFSITE RUNOFF FROM THE NORTH OF THE PROJECT TO THE SOUTH. THIS DRAINAGE PATTERN WILL BE HONORED AND THE PROJECT RUNOFF WILL NOT BE ALLOWED TO COMINGLE WITH THE CLEAN WATER.

6. VEGETATION: THE VEGETATION IN THE PROJECT AREA CONSISTS OF LAWNS, SHRUBS, GRASSLANDS AND ROADSIDE TREES. THE IMPACT TO VEGETATION WILL BE FROM GRADING OPERATIONS AND THE ADDITION OF IMPERVIOUS AREAS SUCH AS SIDEWALK, PARKING AND ROAD WIDENING. MOST OF THE DISTURBED VEGETATION WILL BE REESTABLISHED WITH STANDARD SEED AND MULCH PRACTICES WITH SOME DISTURBED AREAS RECEIVING LANDSCAPING ENHANCEMENTS. ROADSIDE TREES ARE PROPOSED FOR THE LENGTH OF THE PROJECT AS WELL.

7. SOILS: ALL SOIL DATA CAME FROM THE U.S. DEPARTMENT OF AGRICULTURE SOIL CONSERVATION SERVICE FOR THE COUNTY OF CALEDONIA, VERMONT. SOILS ON THE PROJECT SITE ARE VERSHIRE-LOMBARD COMPLEX ("K" FACTOR = 0.37), PEACHAM MUCK ("K" FACTOR = 0.37), CABOT SILT LOAM ("K" FACTOR = 0.32), AND BUCKLAND FINE SANDY LOAM ("K" FACTOR = 0.32). ALL SOILS ARE MODERATELY TO HIGHLY ERODIBLE.

NOTE: K-VALUES GENERALLY INDICATE THE FOLLOWING:
0.0-0.23 = LOW EROSION POTENTIAL
0.24-0.36 = MODERATE EROSION POTENTIAL
0.37 AND HIGHER = HIGH EROSION POTENTIAL

8. SENSITIVE RESOURCE AREAS:

CRITICAL HABITATS: NO
HISTORICAL OR ARCHEOLOGICAL AREAS: NO
PRIME AGRICULTURAL LAND: NO
THREATENED AND ENDANGERED SPECIES: NO
WATER RESOURCE: WATER ANDRIC
WETLANDS: THERE ARE TWO AREAS OF CLASS III WETLANDS PRESENT ON THE PROJECT, ONE AT APPROXIMATE STATION 18+580 RT AND THE OTHER AT APPROXIMATE STATION 19+965 RT. DISTURBANCE TO THE WETLANDS INVOLVE GRADING ACTIVITIES AND THE IMPACT IS MITIGATED AS DESCRIBED IN THE CONSTRUCTION GENERAL PERMIT.

RISK EVALUATION:

9. THIS PROJECT FALLS UNDER THE JURISDICTION OF GENERAL PERMIT 3-9020 FOR STORMWATER RUNOFF FROM CONSTRUCTION SITES AS A MODERATE RISK PROJECT. THIS PROJECT REQUIRES A SITE-SPECIFIC EPSC PLAN AND MUST CONFORM TO "THE VERMONT STANDARDS AND SPECIFICATIONS FOR EROSION PREVENTION AND SEDIMENT CONTROL". ANY MODIFICATIONS TO THE PROJECT THAT INCREASE THE RISK TO ENVIRONMENTAL RESOURCES SHALL BE EVALUATED IN ACCORDANCE WITH THE PERMIT REQUIREMENTS. THE CONTRACTOR WILL BE RESPONSIBLE FOR ANY ADDITIONAL PERMITTING.

EROSION PREVENTION AND SEDIMENT CONTROL:

10. THE EROSION CONTROL PLANS ARE MEANT AS A GUIDELINE FOR PREVENTING EROSION AND CONTROLLING SEDIMENT TRANSPORT. THE PRINCIPLES OUTLINED IN THIS NARRATIVE CONSIST OF APPLYING MEASURES THROUGHOUT CONSTRUCTION OF THE PROJECT IN ORDER TO MINIMIZE SEDIMENT TRANSPORT TO THE RECEIVING WATERS. THE MEASURES INCLUDE STABILIZATION AND STRUCTURAL PRACTICES, STORM WATER CONTROLS AND OTHER POLLUTION PREVENTION PRACTICES. THEY HAVE BEEN PROPOSED BY THE DESIGNER AS A BASIS FOR PROTECTING RESOURCES AND WILL NEED TO BE BUILT UPON BASED ON THE SPECIFIC MEANS AND METHODS OF THE CONTRACTOR.

11. SITE BOUNDARIES AND AREAS CONSTRUCTION EQUIPMENT CAN ACCESS SHALL BE DELINEATED. PROJECT DEMARCATION FENCING (PDF) SHALL BE USED TO PHYSICALLY MARK SITE BOUNDARIES. BARRIER FENCE SHALL BE USED INSTEAD OF PROJECT DEMARCATION FENCE WITHIN 30 METERS OF A WATER RESOURCE (STREAM, BROOK, LAKE, POND, WETLAND, ETC) AS SHOWN ON THE PLANS.

12. SEDIMENT BASINS, SEDIMENT TRAPS, PERIMETER DIKES, SEDIMENT BARRIERS, AND OTHER MEASURES INTENDED TO TRAP SEDIMENT SHALL BE CONSTRUCTED AS A FIRST STEP IN ANY LAND-DISTURBING ACTIVITY AND SHALL BE MADE FUNCTIONAL BEFORE UPSLOPE LAND DISTURBANCE TAKES PLACE.

13. CONCENTRATED RUNOFF SHALL NOT FLOW DOWN CUT OR FILL SLOPES UNLESS CONTAINED WITHIN AN ADEQUATE TEMPORARY OR PERMANENT CHANNEL, FLUME, OR SLOPE DRAIN STRUCTURE.

14. WHENEVER WATER SEEPS FROM A SLOPE FACE, ADEQUATE DRAINAGE OR OTHER PROTECTION SHALL BE PROVIDED.

15. BEFORE NEWLY CONSTRUCTED STORMWATER CONVEYANCE CHANNELS OR PIPES ARE MADE OPERATIONAL, ADEQUATE OUTLET PROTECTION AND ANY REQUIRED TEMPORARY OR PERMANENT CHANNEL LINING SHALL BE INSTALLED IN BOTH THE CONVEYANCE CHANNEL AND THE RECEIVING CHANNEL.

16. UNDERGROUND UTILITY LINES SHALL BE INSTALLED IN ACCORDANCE WITH THE FOLLOWING STANDARDS IN ADDITION TO OTHER APPLICABLE CRITERIA:

A. NO MORE THAN 150 METERS OF TRENCH MAY BE OPENED AT ONE TIME.

B. EXCAVATED MATERIAL SHALL BE PLACED ON THE UPHILL SIDE OF TRENCHES.

17. ALL TEMPORARY EROSION AND SEDIMENT CONTROL MEASURES SHALL BE REMOVED WITHIN 30 DAYS AFTER FINAL SITE STABILIZATION OR AFTER THE TEMPORARY MEASURES ARE NO LONGER NEEDED, UNLESS OTHERWISE AUTHORIZED. GROUND DISTURBANCE RESULTING FROM THIS REMOVAL SHALL BE STABILIZED IMMEDIATELY.

18. SEDIMENT BUILDUP SHALL BE REMOVED IN WATER CONVEYANCES, INCLUDING GRASSED DITCHES AND PIPES, AND AREAS USED FOR TEMPORARY SEDIMENT TRAPS. ALL SEDIMENT REMOVED SHALL BE DISPOSED OF IN AN AREA AS DESCRIBED IN NOTE #19.

19. ALL SEDIMENT REMOVED FROM SEDIMENT CONTROL PRACTICES AS A PART OF MAINTENANCE SHALL BE DISPOSED OF IN AN AREA THAT IS:

A. LESS THAN 5% IN SLOPE.

B. AT LEAST 30 METERS FROM ANY DOWNSLOPE WATER BODY OR CONVEYANCE TO A WATER BODY (INCLUDING STORM DRAIN INLET OR DITCH).

C. VEGETATED.

PERMANENT STABILIZATION OF SEDIMENT SHALL BE IMMEDIATELY IMPLEMENTED FOLLOWING DISPOSAL. GROUND DISTURBANCE RESULTING FROM REMOVAL OF SEDIMENT SHALL BE STABILIZED IMMEDIATELY.

20. FOR ANY AREA TO BE STABILIZED FOR WINTER BY VEGETATIVE COVER, SEEDING MUST BE COMPLETED NO LATER THAN SEPTEMBER 15.

21. ANY AREA TO BE STABILIZED FOR WINTER THAT DOES NOT HAVE ESTABLISHED VEGETATION BY OCTOBER 15 MUST BE STABILIZED BY ANCHORED MULCH AT THE WINTER APPLICATION RATE, OR OTHER APPROVED STABILIZATION MEASURES (E.G. ROLLED EROSION CONTROL PRODUCT). DORMANT SEEDING (E.G. WITH WINTER RYE) IS RECOMMENDED.

22. DISTURBED AREAS BORDERING AND DRAINING TO ROADS MUST HAVE AN APPROPRIATE SEDIMENT BARRIER SPANNING THE EDGE OF THE DISTURBANCE TO PREVENT WASHING OF SEDIMENT ONTO ROADWAYS OR INTO ROAD DITCHES. THE FOLLOWING EXCEPTIONS APPLY:

A. STABILIZATION IS NOT REQUIRED IF WORK IS TO CONTINUE IN THE AREA WITHIN THE NEXT 24 HOURS AND THERE IS NO PRECIPITATION FORECAST FOR THE NEXT 24 HOURS.

B. STABILIZATION IS NOT REQUIRED IF THE WORK IS OCCURRING IN A SELF-CONTAINED EXCAVATION (I.E. NO OUTLET) WITH A DEPTH OF 0.6 METERS OR GREATER (E.G. HOUSE FOUNDATION EXCAVATION, UTILITY TRENCHES).

23. MAINTENANCE MUST BE PERFORMED AS NECESSARY TO ENSURE CONTINUED STABILIZATION. EXCEPT AS NOTED BELOW, ALL SITES SHALL BE SEEDED AND STABILIZED WITH EROSION CONTROL MATERIALS, SUCH AS MULCH OR ROLLED EROSION CONTROL PRODUCTS, INCLUDING AREAS WHERE CONSTRUCTION HAS BEEN SUSPENDED OR SECTIONS COMPLETED:

A. ON THE CUT SIDE OF ROADS, DITCHES SHALL BE STABILIZED IMMEDIATELY WITH ROCK RIP-RAP OR OTHER NON-ERODIBLE LINES (E.G. RECP), OR WHERE APPROPRIATE, VEGETATIVE MEASURES SUCH AS SOD.

B. FOR ACTIVE CONSTRUCTION AREAS SUCH AS BORROW OR STOCKPILE AREAS, ROADWAY IMPROVEMENTS AND AREAS WITHIN 15 METERS. OF A BUILDING UNDER CONSTRUCTION, A PERIMETER SEDIMENT CONTROL SYSTEM CONSISTING, FOR EXAMPLE, OF SILT FENCING, SHALL BE INSTALLED AND MAINTAINED TO CONTAIN SOIL. EXPOSED DISTURBED AREAS ADJACENT TO A CONVEYANCE THAT PROVIDES RAPID OFFSITE DISCHARGE OF SEDIMENT, SUCH AS A CUT SLOPE AT AN ENTRANCE, SHALL BE COVERED WITH PLASTIC OR GEOTEXTILE TO PREVENT SOIL LOSS UNTIL IT CAN BE STABILIZED. STABILIZED CONSTRUCTION ENTRANCES WILL BE MAINTAINED TO CONTROL VEHICLE TRACKING MATERIAL OFF SITE.

C. PERMANENT SEEDING SHALL ONLY BE UNDERTAKEN IN THE SPRING FROM APRIL THROUGH MAY, AND IN LATE SUMMER AND EARLY FALL UNTIL SEPTEMBER 15, EXCEPT THAT PERMANENT SEEDING MAY BE UNDERTAKEN DURING THE SUMMER IF PLANS PROVIDE FOR ADEQUATE WATERING. DURING THE PEAK SUMMER MONTHS AND IN THE FALL AFTER SEPTEMBER 15, WHEN SEEDING IS FOUND TO BE IMPRACTICABLE, AN APPROPRIATE TEMPORARY STABILIZATION SHALL BE SPECIFIED.

D. TEMPORARY SEDIMENT TRAPPING DEVICES SHALL NOT BE REMOVED UNTIL PERMANENT STABILIZATION IS ESTABLISHED IN ALL CONTRIBUTORY DRAINAGE AREAS. SIMILARLY, STABILIZATION SHALL BE ESTABLISHED PRIOR TO CONVERTING SEDIMENT TRAPS/BASINS INTO PERMANENT (POST-CONSTRUCTION) STORMWATER MANAGEMENT PRACTICES.

E. STABILIZATION MEASURES SHALL BE APPLIED TO EARTHEN STRUCTURES SUCH AS DAMS, DIKES, AND DIVERSION IMMEDIATELY AFTER INSTALLATION.

F. ALL SLOPES STEEPER THAN 3:1 (H:V), OR 33.3%, AS WELL AS PERIMETER DIKES, SEDIMENT BASIN OR TRAPS, AND EMBANKMENTS SHALL, UPON COMPLETION, BE IMMEDIATELY STABILIZED WITH SOD, SEED AND ANCHORED HAY MULCH, OR OTHER APPROVED STABILIZATION MEASURES (RECP). AREAS OUTSIDE OF THE PERIMETER SEDIMENT CONTROL SYSTEM SHALL NOT BE DISTURBED.

G. ALL STABILIZED SLOPES, WATER CONVEYANCES AND OTHER AREAS SHALL BE INSPECTED AND APPROVED BY THE ENGINEER AND IN ACCORDANCE WITH THE TERMS OF THE AUTHORIZATION TO DISCHARGE ISSUED BY THE VERMONT AGENCY OF NATURAL RESOURCES.

24. IN ADVANCE OF A PREDICTED RAINFALL OR SNOWMELT EVENT, ALL MANAGEMENT PRACTICES APPROPRIATE TO CURRENT AREAS OF DISTURBANCE MUST BE CHECKED AND REPAIRED AS NECESSARY TO ENSURE PROPER OPERATING CONDITION. IF NECESSARY TO PREVENT SEDIMENT DISCHARGE FROM THE CONSTRUCTION SITE TO WATERS OF THE STATE, THIS WILL INCLUDE THE TEMPORARY STABILIZATION OF ALL DISTURBED SOILS ON THE SITE IN ADVANCE OF THE ANTICIPATED RUNOFF PERIOD.

25. THE CONTRACTOR SHALL PERMANENTLY STABILIZE ALL REQUIRED AREAS WITH TOPSOIL AND SEEDING IMMEDIATELY UPON FINAL GRADING.

Stantec

PROJECT NAME: DANVILLE	
PROJECT NUMBER: F EGC 028-3(32)	
FILE NAME: ...\plotfiles\EPSC notes 01.ptf	PLOT DATE: 1/18/2011
DESIGN SUPERVISOR: GARY SANTY	DRAWN BY: STANTEC
DESIGNED BY: STANTEC	CHECKED BY: STANTEC
EPSC NARRATIVE SHEET ENR-1	SHEET 105 OF 306

1/18/2011 1:51:42 PM v:\1953\active\195330033_i092\highway\plotfiles\EPSC notes 01.ptf

WINTER SHUTDOWN:

26. SEEDING SHALL BE COMPLETED NO LATER THAN SEPTEMBER 15 TO ENSURE ADEQUATE GROWTH AND COVER.

27. NON-VEGETATIVE STABILIZATION FOR DISTURBED AREAS WITHOUT VEGETATION SHALL BE COMPLETED NO LATER THAN OCTOBER 15. ANY AREA NOT STABILIZED BY OCTOBER 15 MUST BE STABILIZED WITH WINTER RYE AND EROSION MATTING OR ANCHORED MULCH AT THE WINTER APPLICATION RATE.

28. DISTURBED AREAS REQUIRING MULCH STABILIZATION DURING WINTER SHUTDOWN SHALL BE COVERED WITH 75 mm OF MULCH WITH 80 - 90% COVER. MULCH SHALL BE TRACKED IN OR STABILIZED WITH NETTING.

29. IF CONSTRUCTION ACTIVITIES INVOLVING EARTH DISTURBANCE OCCUR BETWEEN OCTOBER 15 AND APRIL 15, THE CONTRACTOR SHALL PREPARE AND IMPLEMENT A WINTER CONSTRUCTION PLAN IN ACCORDANCE WITH THE VERMONT STANDARDS AND SPECIFICATIONS FOR EROSION PREVENTION AND SEDIMENT CONTROL AND CONSTRUCTION GENERAL PERMIT 3-9020. THIS PLAN MUST BE FILED WITH, AND APPROVED BY, THE AGENCY OF NATURAL RESOURCES (ANR) BY SEPTEMBER 15. IF IT IS DETERMINED BY THE ENGINEER OR ANR THAT WINTER CONSTRUCTION WOULD PRESENT A SIGNIFICANT RISK TO WATER QUALITY, THE CONTRACTOR WILL BE REQUIRED TO REQUEST A WINTER SHUTDOWN IN ACCORDANCE WITH THE PROVISIONS OF THE CONTRACT DOCUMENTS.

SEQUENCE AND STAGING:

THIS SECTION WILL BE DEVELOPED BY THE CONTRACTOR USING THE GUIDANCE OUTLINED IN THE VTRANS EPSC PLAN CONTRACTOR CHECKLIST.

30. **CONSTRUCTION SEQUENCE**

31. **OFF-SITE ACTIVITIES**
IN ADDITION TO THE CONTRACTOR CHECKLIST ANY ACTIVITIES OUTSIDE THE CONSTRUCTION LIMITS SHALL FOLLOW SUBSECTIONS 105.25- 105.29 OF THE STANDARD SPECIFICATIONS FOR CONSTRUCTION.

1/18/2011 1:51:43 PM v:\1953\active\195310033_10192\highway\plotfiles\EPSC notes 02.ptf

Stantec

PROJECT NAME: DANVILLE
PROJECT NUMBER: F EGC 028-3(32)

FILE NAME: ...\plotfiles\EPSC notes 02.ptf
DESIGN SUPERVISOR: GARY SANTY
DESIGNED BY: STANTEC
EPSC NARRATIVE SHEET ENR-2

PLOT DATE: 1/18/2011
DRAWN BY: STANTEC
CHECKED BY: STANTEC
SHEET 106 OF 306

653.40 – INLET PROTECTION DEVICE, TYPE I
STA. 18+532.9, LT (FILTER FABRIC)

653.50 – BARRIER FENCE
STA. 18+572 TO 18+600, RT

653.55 – PROJECT DEMARCATION FENCE
STA. 18+388.5 TO 18+450.4, RT
STA. 18+453.9 TO 18+572.0, RT
STA. 18+506.1 TO 18+521.3, LT
STA. 18+526.0 TO 18+600.0, LT

AREA NUMBER	653.20 - TEMPORARY EROSION MATTING
	AREAS (SM)
1	405.9
2	299.3

SOIL CLASSIFICATION A
VERSHIRE-LOMBARD COMPLEX
8-15% SLOPES, ROCKY
"K" FACTOR = 0.37
CLASSIFIED HIGHLY ERODIBLE

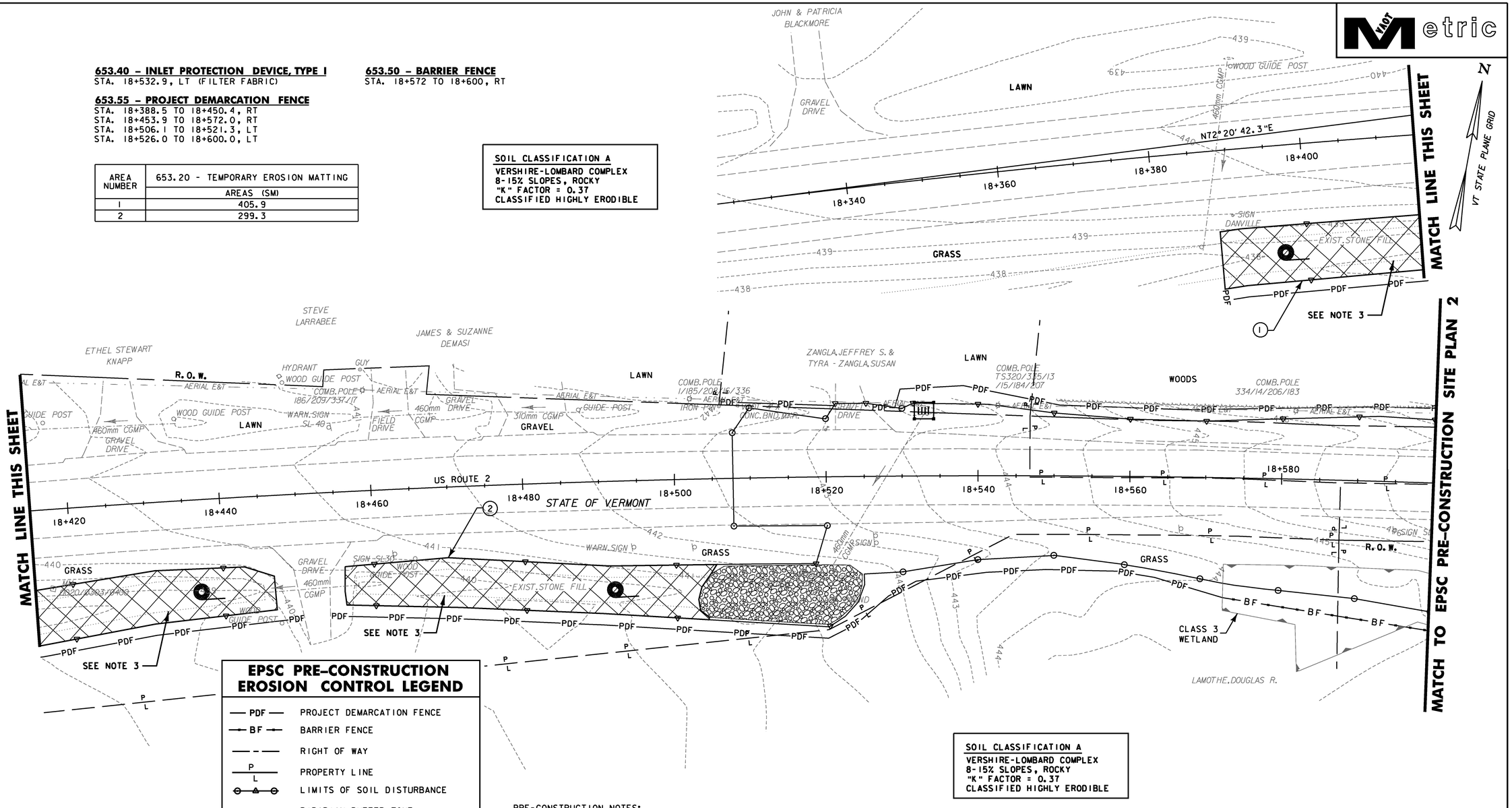

SOIL CLASSIFICATION A
VERSHIRE-LOMBARD COMPLEX
8-15% SLOPES, ROCKY
"K" FACTOR = 0.37
CLASSIFIED HIGHLY ERODIBLE

EPSC PRE-CONSTRUCTION EROSION CONTROL LEGEND

- PDF — PROJECT DEMARCATION FENCE
- BF — BARRIER FENCE
- RIGHT OF WAY
- P / L — PROPERTY LINE
- LIMITS OF SOIL DISTURBANCE
- RIPARIAN BUFFER ZONE
- SOIL CLASSIFICATION BOUNDARY
- INLET PROTECTION-FILTER FIBER (PAID AS ITEM 653.41)
- INLET PROTECTION-FILTER FABRIC (PAID AS ITEM 653.40)
- ROLLED EROSION CONTROL PRODUCT (RECP) EROSION MATTING FOR SIDE SLOPES AND DITCHES
- STONE OUTLET PROTECTION
- WATERSHED BOUNDARY
- CLASS III WETLAND BOUNDARY
- SEDIMENT BASIN

PRE-CONSTRUCTION NOTES:

1. ALL SEDIMENT CONTROL MEASURES SHALL BE INSTALLED PRIOR TO INITIATING PRINCIPAL EARTHWORK ACTIVITIES.
2. OPERATIONAL STORMWATER PRACTICES (DETENTION POND AND GRASS SWALES) SHALL BE PERMANENTLY STABILIZED BEFORE RECEIVING RUNOFF.
3. SEE CONSTRUCTION PLAN 1 AND STORMWATER MANAGEMENT DETAILS SWM-3 FOR CONSTRUCTION NOTES AND DETAILS OF VEGETATED TREATMENT SWALES.

DATUM
VERTICAL NAVD88
HORIZONTAL NAD83(92)

0 10 20
SCALE 1:250

STA 18+507.730 TO 18+600

PROJECT NAME: DANVILLE
PROJECT NUMBER: F EGC 028-3(32)

FILE NAME: ...\plotfiles\EPSC EPR-01.ptf
DESIGN SUPERVISOR: GARY SANTY
DESIGNED BY: STANTEC
EPSC PRE-CONSTRUCTION PLAN EPR-1
PLOT DATE: 1/18/2011
DRAWN BY: STANTEC
CHECKED BY: STANTEC
SHEET 107 OF 306

1/18/2011 15:46 PM v:\1953\active\19530033.092\highway\plotfiles\EPSC EPR-01.ptf

VTrans Metric

653.55 – PROJECT DEMARCATION FENCE
STA. 18+614.0 TO 18+654.5, RT
STA. 18+600.0 TO 18+645.0, LT
STA. 18+648.9 TO 18+756.9, LT
STA. 18+665.6 TO 18+749.6, RT
STA. 18+758.0 TO 18+770.0, RT
STA. 18+766.8 TO 18+770.0, LT

653.50 – BARRIER FENCE
STA. 18+600.0 TO 18+614, RT

N
VT STATE PLANE GRID

SOIL CLASSIFICATION A
VERSHIRE-LOMBARD COMPLEX
8-15% SLOPES, ROCKY
"K" FACTOR = 0.37
CLASSIFIED HIGHLY ERODIBLE

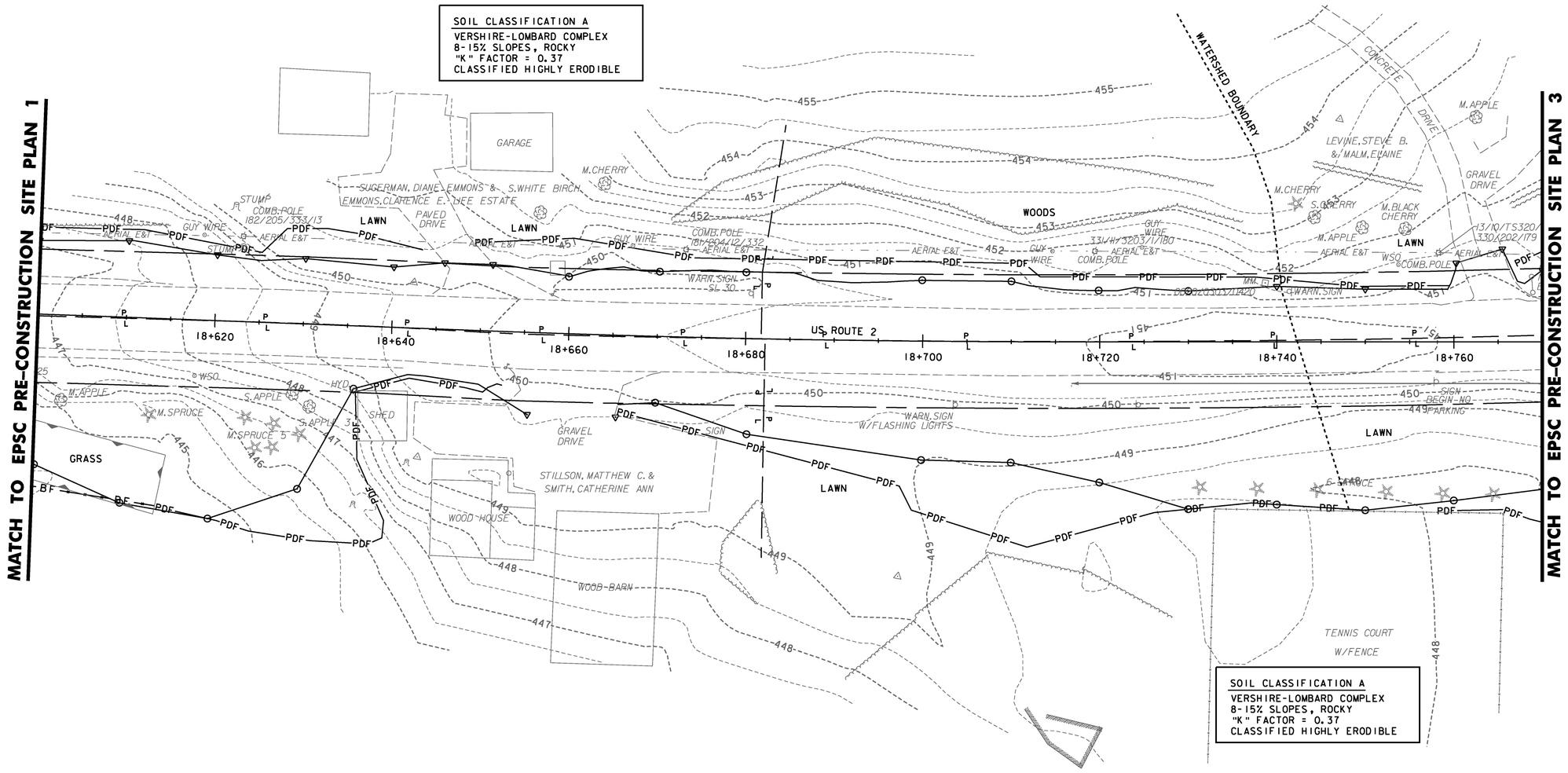

NOTE:
1. SEE EPSC PRE-CONSTRUCTION SITE PLAN EPR-1 FOR GENERAL NOTES AND LEGEND

STA 18+600 TO 18+770

DATUM
VERTICAL NAVD88
HORIZONTAL NAD83(92)

0 10 20
SCALE 1:250

Stantec

PROJECT NAME: DANVILLE	
PROJECT NUMBER: F EGC 028-3(32)	
FILE NAME: ...\plotfiles\EPSC EPR-02.ptf	PLOT DATE: 1/18/2011
DESIGN SUPERVISOR: GARY SANTY	DRAWN BY: STANTEC
DESIGNED BY: STANTEC	CHECKED BY: STANTEC
EPSC PRE-CONSTRUCTION PLAN EPR-2	SHEET 108 OF 306

1/18/2011 15:48 PM v:\0953\active\09530033.0192\highway\plotfiles\EPSC EPR-02.ptf

653.40 – INLET PROTECTION DEVICE, TYPE I
STA. 18+866.8, RT (FILTER FABRIC)

653.55 – PROJECT DEMARCATION FENCE
STA. 1+022.7 TO 1+075.4, LT
STA. 1+016.7 TO 1+075.5, RT
STA. 18+770.0 TO 18+796.3, RT
STA. 18+770.0 TO 18+789.0, LT
STA. 18+792.5 TO 18+825.6, LT
STA. 18+799.3 TO 18+903.9, RT
STA. 18+908.0 TO 18+930.0, RT
STA. 18+839.2 TO 18+898.6, LT

653.41 – INLET PROTECTION DEVICE, TYPE II
STA. 18+914.3, RT (FILTER FIBER)
STA. 18+914.5, LT (FILTER FIBER)

SOIL CLASSIFICATION A
VERSHIRE-LOWBARD COMPLEX
8-15% SLOPES, ROCKY
"K" FACTOR = 0.37
CLASSIFIED HIGHLY ERODIBLE

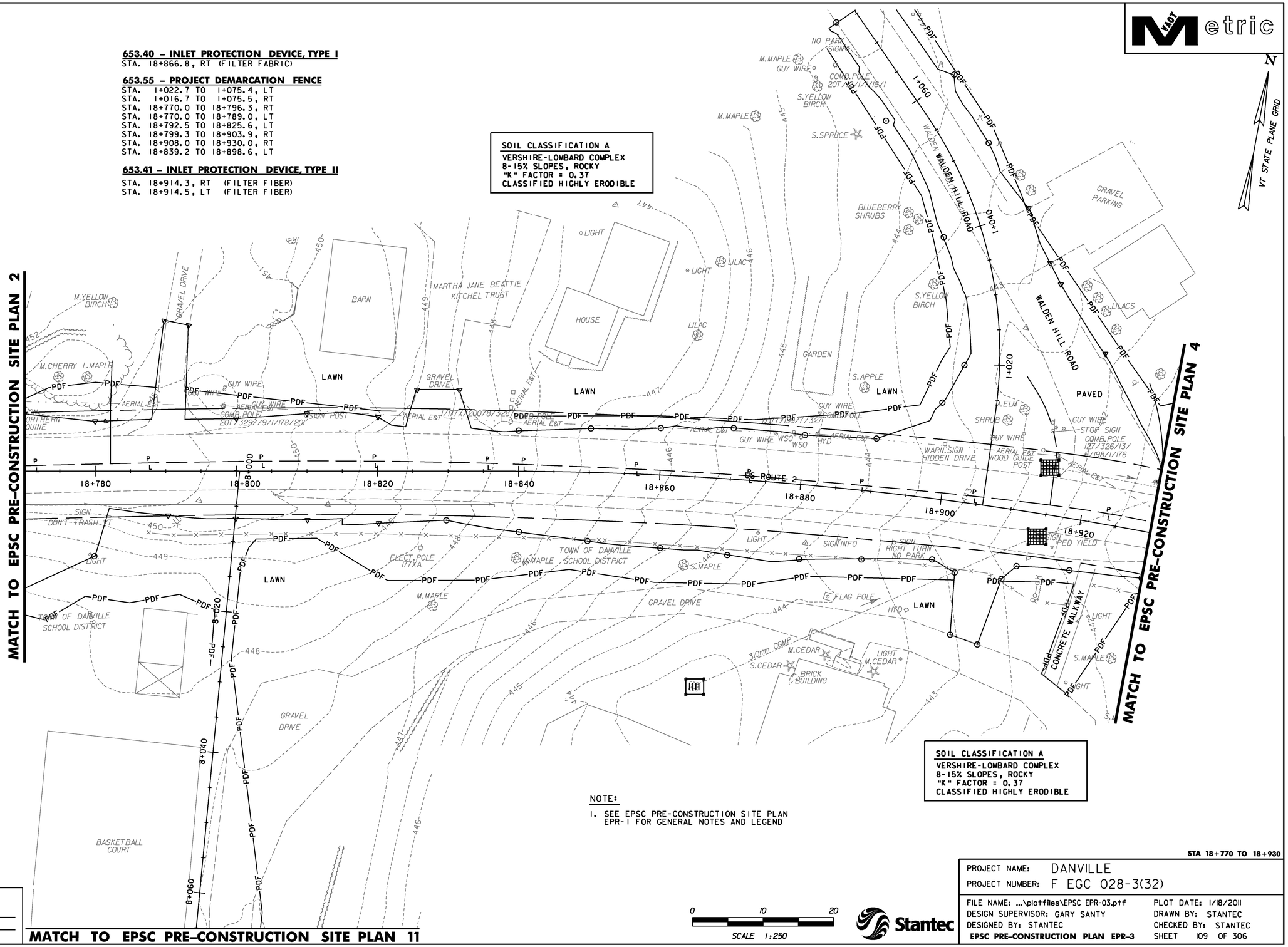

NOTE:
1. SEE EPSC PRE-CONSTRUCTION SITE PLAN EPR-1 FOR GENERAL NOTES AND LEGEND

SOIL CLASSIFICATION A
VERSHIRE-LOWBARD COMPLEX
8-15% SLOPES, ROCKY
"K" FACTOR = 0.37
CLASSIFIED HIGHLY ERODIBLE

DATUM
VERTICAL NAVD88
HORIZONTAL NAD83(92)

SCALE 1:250

STA 18+770 TO 18+930

PROJECT NAME: DANVILLE
PROJECT NUMBER: F EGC 028-3(32)

FILE NAME: ...\plotfiles\EPSC EPR-03.ptf
DESIGN SUPERVISOR: GARY SANTY
DESIGNED BY: STANTEC
EPSC PRE-CONSTRUCTION PLAN EPR-3
PLOT DATE: 1/18/2011
DRAWN BY: STANTEC
CHECKED BY: STANTEC
SHEET 109 OF 306

1/18/2011 15:50 PM v:\0953\active\195300033.0192\highway\plotfiles\EPSC EPR-03.ptf

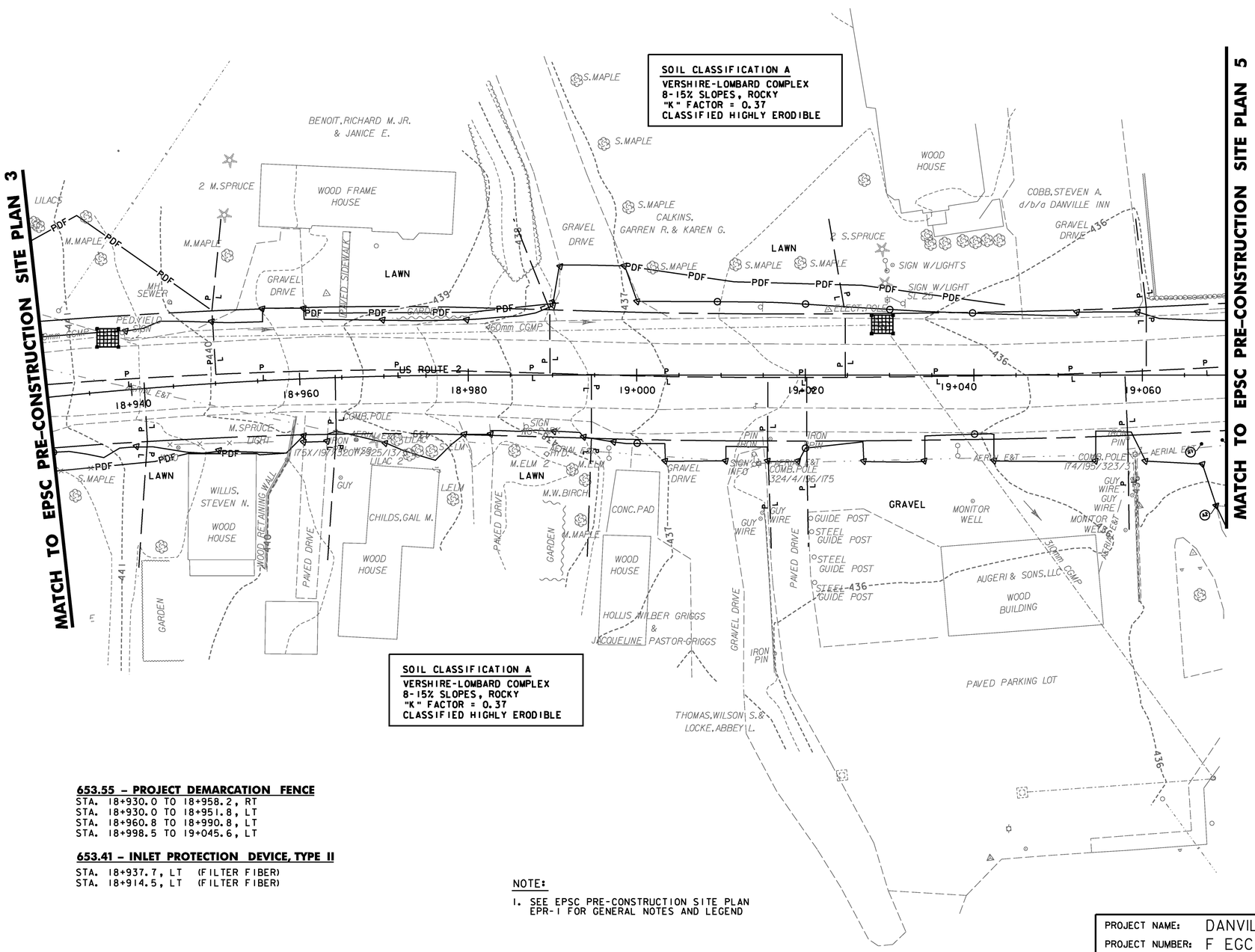

653.55 – PROJECT DEMARCATION FENCE

STA. 18+930.0 TO 18+958.2, RT
STA. 18+930.0 TO 18+951.8, LT
STA. 18+960.8 TO 18+990.8, LT
STA. 18+998.5 TO 19+045.6, LT

653.41 – INLET PROTECTION DEVICE, TYPE II

STA. 18+937.7, LT (FILTER FIBER)
STA. 18+914.5, LT (FILTER FIBER)

NOTE:

1. SEE EPSC PRE-CONSTRUCTION SITE PLAN EPR-1 FOR GENERAL NOTES AND LEGEND

STA 18+930 TO 19+070

0 10 20
SCALE 1:250

Stantec

PROJECT NAME: DANVILLE	
PROJECT NUMBER: F EGC 028-3(32)	
FILE NAME: ...\plotfiles\EPSC EPR-04.ptf	PLOT DATE: 1/18/2011
DESIGN SUPERVISOR: GARY SANTY	DRAWN BY: STANTEC
DESIGNED BY: STANTEC	CHECKED BY: STANTEC
EPSC PRE-CONSTRUCTION PLAN EPR-4	SHEET 110 OF 306

DATUM

VERTICAL NAVD88
HORIZONTAL

1/18/2011 1:51:52 PM v:\1953\active\195310033_10192\highway\plotfiles\EPSC EPR-04.ptf

Metric

N

VT STATE PLANE GRID

MATCH TO EPSC PRE-CONSTRUCTION SITE PLAN 4

MATCH TO EPSC PRE-CONSTRUCTION SITE PLAN 7

MATCH TO EPSC PRE-CONSTRUCTION SITE PLAN 6

MATCH TO EPSC PRE-CONSTRUCTION SITE PLAN 6

MATCH TO EPSC PRE-CONSTRUCTION SITE PLAN 6

SOIL CLASSIFICATION A
VERSHIRE-LOMBARD COMPLEX
8-15% SLOPES, ROCKY
"K" FACTOR = 0.37
CLASSIFIED HIGHLY ERODIBLE

SOIL CLASSIFICATION A
VERSHIRE-LOMBARD COMPLEX
8-15% SLOPES, ROCKY
"K" FACTOR = 0.37
CLASSIFIED HIGHLY ERODIBLE

653.55 – PROJECT DEMARCATION FENCE
STA. 19+092.9 TO 19+117.3, RT
STA. 19+134.8 TO 19+159.1, RT
STA. 19+229.3 TO 19+260.0, LT
STA. 19+246.9 TO 19+257.2, RT
STA. 4+012.6 TO 4+035.0, RT
STA. 5+012.2 TO 5+022.0, LT

653.41 – INLET PROTECTION DEVICE, TYPE II
STA. 19+123.6, LT (FILTER FIBER)
STA. 19+170.6, RT (FILTER FIBER)
STA. 19+221.1, RT (FILTER FIBER)
STA. 19+222.7, RT (FILTER FIBER)
STA. 19+230.0, RT (FILTER FIBER)

NOTE:
1. SEE EPSC PRE-CONSTRUCTION SITE PLAN EPR-1 FOR GENERAL NOTES AND LEGEND

DATUM
VERTICAL NAVD88
HORIZONTAL NAD83(92)

0 10 20
SCALE 1:250

Stantec

STA 19+070 TO 19+260

PROJECT NAME: DANVILLE
PROJECT NUMBER: F EGC 028-3(32)

FILE NAME: ...\plotfiles\EPSC EPR-05.ptf
DESIGN SUPERVISOR: GARY SANTY
DESIGNED BY: STANTEC
EPSC PRE-CONSTRUCTION PLAN EPR-5
PLOT DATE: 1/18/2011
DRAWN BY: STANTEC
CHECKED BY: STANTEC
SHEET III OF 306

1/18/2011 15:54 PM v:\0953\active\95300033.0192\highway\plotfiles\EPSC EPR-05.ptf

MATCH TO EPSC PRE-CONSTRUCTION SITE PLAN 5

MATCH TO EPSC PRE-CONSTRUCTION SITE PLAN 5

MATCH TO EPSC PRE-CONSTRUCTION SITE PLAN 5

SOIL CLASSIFICATION A
VERSHIRE-LOMBARD COMPLEX
8-15% SLOPES, ROCKY
"K" FACTOR = 0.37
CLASSIFIED HIGHLY ERODIBLE

653.55 – PROJECT DEMARCATION FENCE
STA. 2+016.2 TO 2+045.6, RT
STA. 2+046.9 TO 2+063.3, RT
STA. 2+017.1 TO 2+118.2, LT
STA. 2+100.3 TO 2+103.3, RT
STA. 2+104.3 TO 2+118.2, RT
STA. 2+120.8 TO 2+127.7, RT
STA. 2+128.8 TO 2+139.7, RT
STA. 2+155.2 TO 2+165.1, RT
STA. 2+166.4 TO 2+171.2, RT
STA. 2+197.6 TO 2+208.2, RT
STA. 2+209.2 TO 2+222.8, RT
STA. 2+210.4 TO 2+235.4, LT
STA. 2+227.8 TO 2+244.7, RT
STA. 4+034.9 TO 4+097.5, RT
STA. 5+022.3 TO 5+051.2, LT
STA. 5+052.2 TO 5+058.3, LT
STA. 5+063.2 TO 5+072.6, LT

NOTE:
1. SEE EPSC PRE-CONSTRUCTION SITE PLAN EPR-1 FOR GENERAL NOTES AND LEGEND

DATUM
VERTICAL NAVD88
HORIZONTAL NAD83(92)

SCALE 1:250

PROJECT NAME: DANVILLE
PROJECT NUMBER: F EGC 028-3(32)

FILE NAME: ...\plotfiles\EPSC EPR-06.ptf
DESIGN SUPERVISOR: GARY SANTY
DESIGNED BY: STANTEC
EPSC PRE-CONSTRUCTION PLAN EPR-6
PLOT DATE: 1/18/2011
DRAWN BY: STANTEC
CHECKED BY: STANTEC
SHEET 112 OF 306

1/18/2011 15:56 PM v:\0953\active\09530033.0092\highway\plotfiles\EPSC EPR-06.ptf

VTrans Metric

MATCH TO EPSC PRE-CONSTRUCTION SITE PLAN 5

MATCH TO EPSC PRE-CONSTRUCTION SITE PLAN 8

SOIL CLASSIFICATION A
VERSHIRE-LOMBARD COMPLEX
8-15% SLOPES, ROCKY
"K" FACTOR = 0.37
CLASSIFIED HIGHLY ERODIBLE

SOIL CLASSIFICATION B
PEACHAM MUCK
0-3% SLOPES
"K" FACTOR = 0.37 (ASSUMED)
CLASSIFIED HIGHLY ERODIBLE

SOIL CLASSIFICATION B
SOIL CLASSIFICATION A

N
VT STATE PLANE GRID

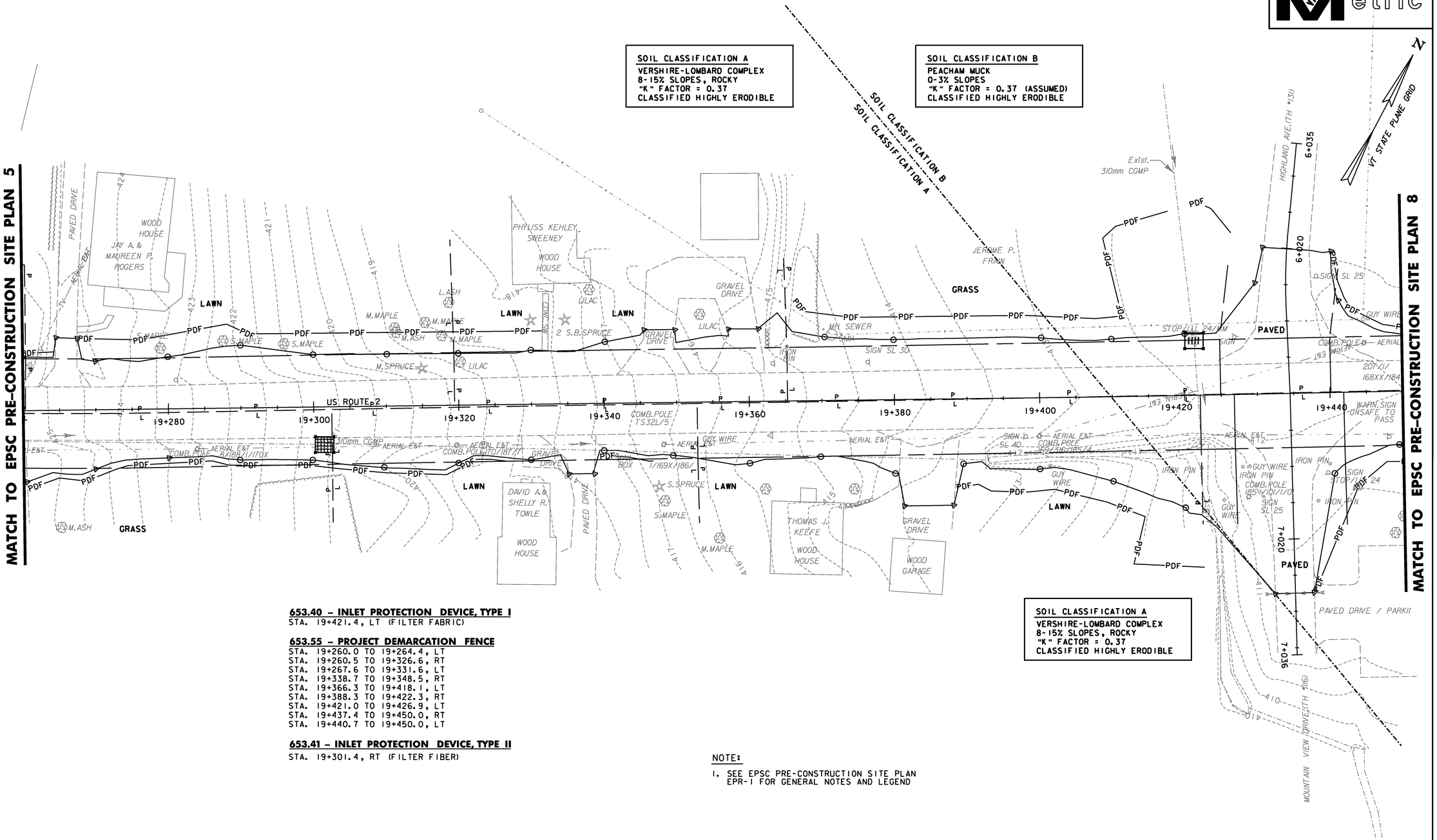

653.40 – INLET PROTECTION DEVICE, TYPE I
STA. 19+421.4, LT (FILTER FABRIC)

653.55 – PROJECT DEMARCATION FENCE
STA. 19+260.0 TO 19+264.4, LT
STA. 19+260.5 TO 19+326.6, RT
STA. 19+267.6 TO 19+331.6, LT
STA. 19+338.7 TO 19+348.5, RT
STA. 19+366.3 TO 19+418.1, LT
STA. 19+388.3 TO 19+422.3, RT
STA. 19+421.0 TO 19+426.9, LT
STA. 19+437.4 TO 19+450.0, RT
STA. 19+440.7 TO 19+450.0, LT

653.41 – INLET PROTECTION DEVICE, TYPE II
STA. 19+301.4, RT (FILTER FIBER)

NOTE:
1. SEE EPSC PRE-CONSTRUCTION SITE PLAN EPR-1 FOR GENERAL NOTES AND LEGEND

SOIL CLASSIFICATION A
VERSHIRE-LOMBARD COMPLEX
8-15% SLOPES, ROCKY
"K" FACTOR = 0.37
CLASSIFIED HIGHLY ERODIBLE

STA 19+260 TO 19+450

DATUM
VERTICAL NAVD88
HORIZONTAL NAD83(92)

0 10 20
SCALE 1:250

Stantec

PROJECT NAME: DANVILLE
PROJECT NUMBER: F EGC 028-3(32)

FILE NAME: ...\plotfiles\EPSC EPR-07.ptf
DESIGN SUPERVISOR: GARY SANTY
DESIGNED BY: STANTEC
EPSC PRE-CONSTRUCTION PLAN EPR-7
PLOT DATE: 1/18/2011
DRAWN BY: STANTEC
CHECKED BY: STANTEC
SHEET 113 OF 306

1/18/2011 5:15:58 PM v:\1953\active\95330033_1092\highway\plotfiles\EPSC EPR-07.ptf

VAOT Metric

653.55 – PROJECT DEMARCATION FENCE
STA. 19+450.0 TO 19+465.0, LT
STA. 19+450.0 TO 19+486.8, RT
STA. 19+488.0 TO 19+590.0, LT
STA. 19+490.7 TO 19+521.5, RT
STA. 19+566.6 TO 19+590.0, RT

N

VT STATE PLANE GRID

SOIL CLASSIFICATION B
PEACHAM MUCK
0-3% SLOPES
"K" FACTOR = 0.37 (ASSUMED)
CLASSIFIED HIGHLY ERODIBLE

SOIL CLASSIFICATION C
CABOT SILT LOAM
8-15% SLOPES
"K" FACTOR = 0.32
CLASSIFIED HIGHLY ERODIBLE

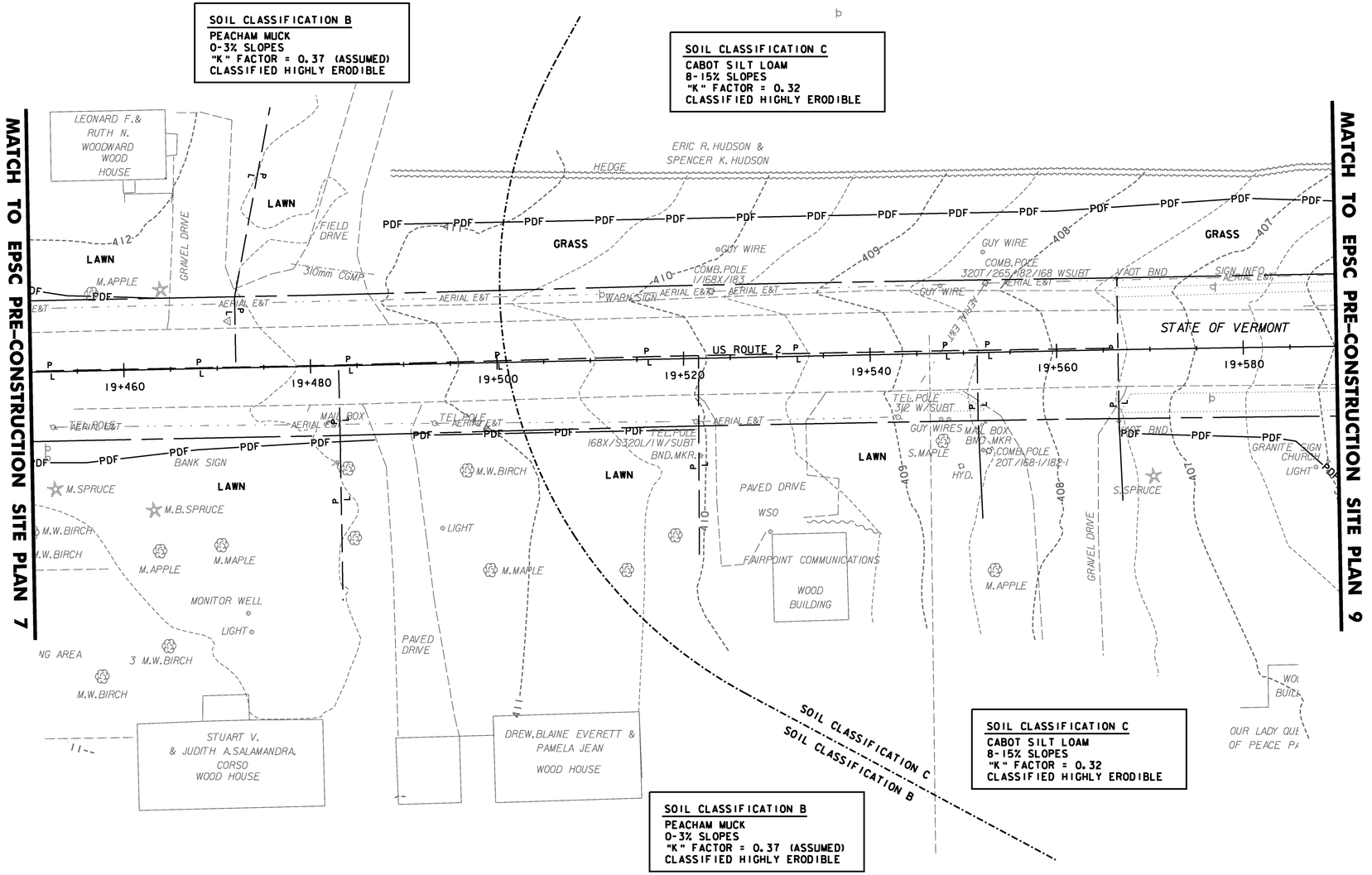

SOIL CLASSIFICATION C
CABOT SILT LOAM
8-15% SLOPES
"K" FACTOR = 0.32
CLASSIFIED HIGHLY ERODIBLE

SOIL CLASSIFICATION B
PEACHAM MUCK
0-3% SLOPES
"K" FACTOR = 0.37 (ASSUMED)
CLASSIFIED HIGHLY ERODIBLE

NOTE:
1. SEE EPSC PRE-CONSTRUCTION SITE PLAN EPR-1 FOR GENERAL NOTES AND LEGEND

STA 19+450 TO 19+590

DATUM
VERTICAL NAVD88
HORIZONTAL NAD83(92)

0 10 20
SCALE 1:250

Stantec

PROJECT NAME: DANVILLE
PROJECT NUMBER: F EGC 028-3(32)

FILE NAME: ...\plotfiles\EPSC EPR-08.ptf
DESIGN SUPERVISOR: GARY SANTY
DESIGNED BY: STANTEC
EPSC PRE-CONSTRUCTION PLAN EPR-8

PLOT DATE: 1/18/2011
DRAWN BY: STANTEC
CHECKED BY: STANTEC
SHEET 114 OF 306

1/18/2011 11:51:59 PM v:\1953\active\195300033.0192\highway\plotfiles\EPSC EPR-08.ptf

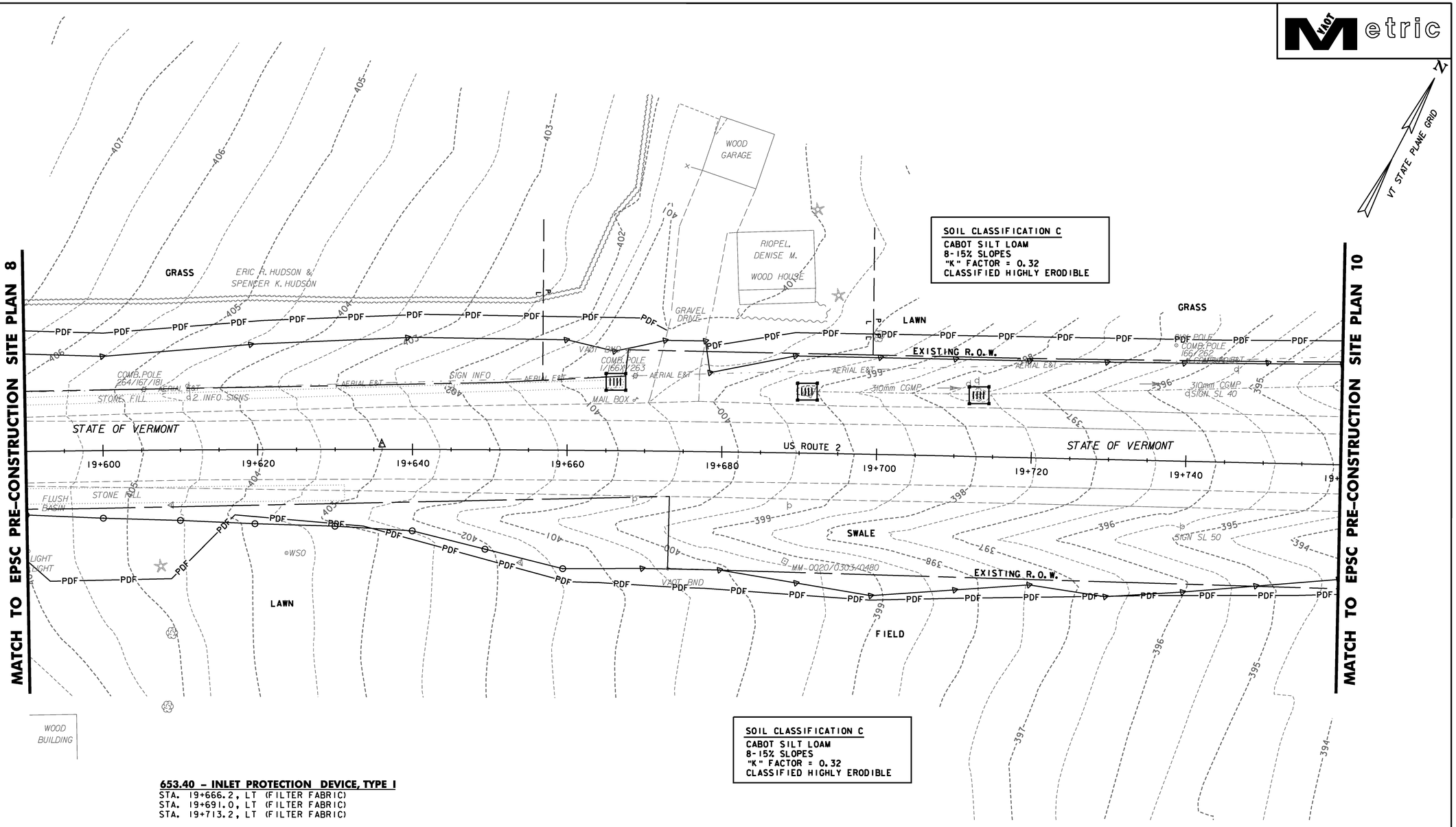

SOIL CLASSIFICATION C
CABOT SILT LOAM
8-15% SLOPES
"K" FACTOR = 0.32
CLASSIFIED HIGHLY ERODIBLE

SOIL CLASSIFICATION C
CABOT SILT LOAM
8-15% SLOPES
"K" FACTOR = 0.32
CLASSIFIED HIGHLY ERODIBLE

653.40 – INLET PROTECTION DEVICE, TYPE I
STA. 19+666.2, LT (FILTER FABRIC)
STA. 19+691.0, LT (FILTER FABRIC)
STA. 19+713.2, LT (FILTER FABRIC)

653.55 – PROJECT DEMARCATION FENCE
STA. 19+590.0 TO 19+672.7, LT
STA. 19+590.0 TO 19+760.0, RT
STA. 19+679.8 TO 19+760.0, LT

NOTE:
1. SEE EPSC PRE-CONSTRUCTION SITE PLAN EPR-1 FOR GENERAL NOTES AND LEGEND

STA 19+590 TO 19+760

DATUM
VERTICAL NAVD88
HORIZONTAL NAD83(92)

0 10 20
SCALE 1:250

Stantec

PROJECT NAME: DANVILLE
PROJECT NUMBER: F EGC 028-3(32)

FILE NAME: ...\plotfiles\EPSC EPR-09.ptf
DESIGN SUPERVISOR: GARY SANTY
DESIGNED BY: STANTEC
EPSC PRE-CONSTRUCTION PLAN EPR-9

PLOT DATE: 1/18/2011
DRAWN BY: STANTEC
CHECKED BY: STANTEC
SHEET 115 OF 306

1/18/2011 1:52:01 PM v:\1953\active\195310033_10192\highway\plotfiles\EPSC EPR-09.ptf

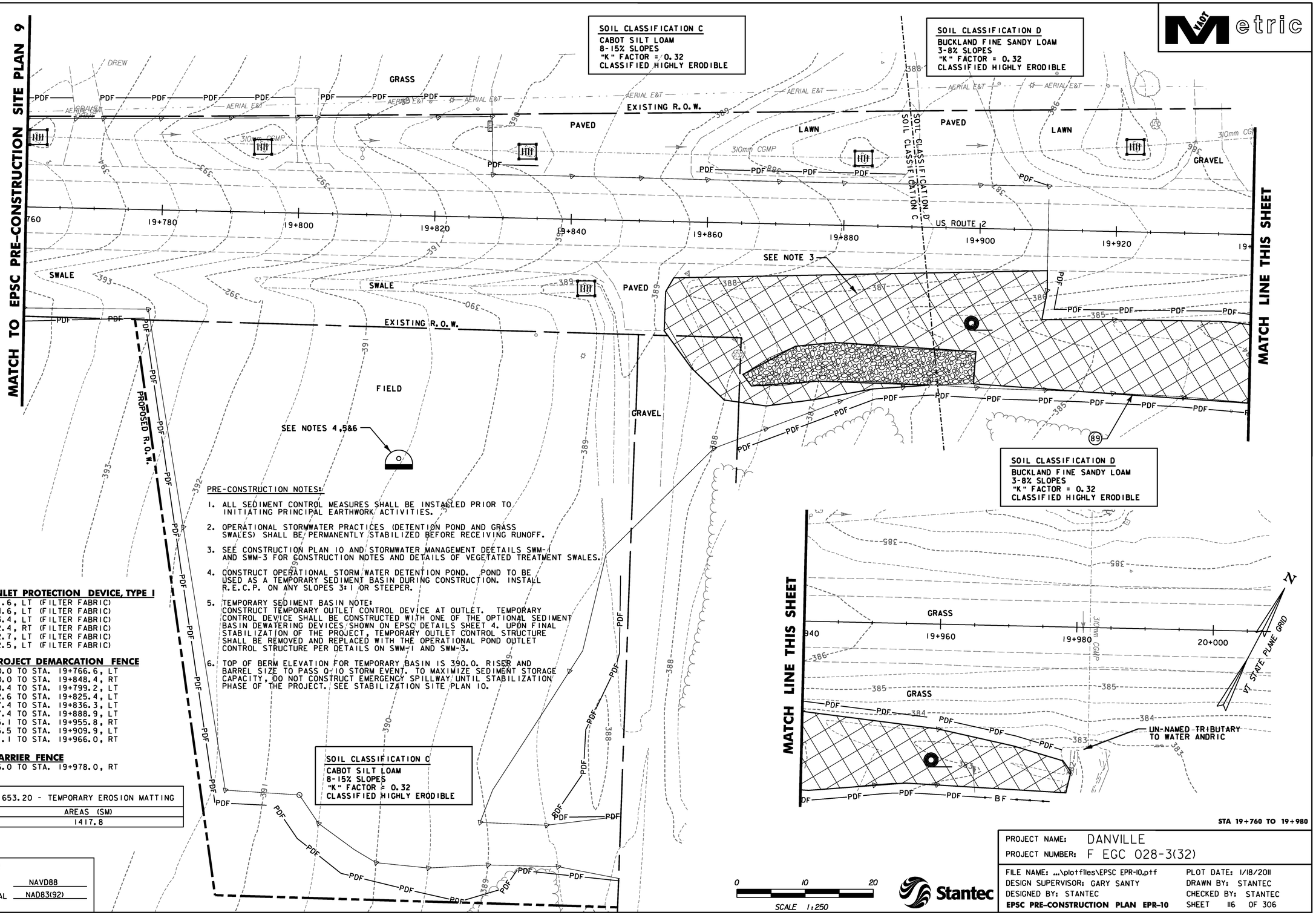

PRE-CONSTRUCTION NOTES:

1. ALL SEDIMENT CONTROL MEASURES SHALL BE INSTALLED PRIOR TO INITIATING PRINCIPAL EARTHWORK ACTIVITIES.
2. OPERATIONAL STORMWATER PRACTICES (DETENTION POND AND GRASS SWALES) SHALL BE PERMANENTLY STABILIZED BEFORE RECEIVING RUNOFF.
3. SEE CONSTRUCTION PLAN 10 AND STORMWATER MANAGEMENT DEETAILS SWM-1 AND SWM-3 FOR CONSTRUCTION NOTES AND DETAILS OF VEGETATED TREATMENT SWALES.
4. CONSTRUCT OPERATIONAL STORM WATER DETENTION POND. POND TO BE USED AS A TEMPORARY SEDIMENT BASIN DURING CONSTRUCTION. INSTALL R.E.C.P. ON ANY SLOPES 3:1 OR STEEPER.
5. TEMPORARY SEDIMENT BASIN NOTE: CONSTRUCT TEMPORARY OUTLET CONTROL DEVICE AT OUTLET. TEMPORARY CONTROL DEVICE SHALL BE CONSTRUCTED WITH ONE OF THE OPTIONAL SEDIMENT BASIN DEWATERING DEVICES SHOWN ON EPSC DETAILS SHEET 4. UPON FINAL STABILIZATION OF THE PROJECT, TEMPORARY OUTLET CONTROL STRUCTURE SHALL BE REMOVED AND REPLACED WITH THE OPERATIONAL POND OUTLET CONTROL STRUCTURE PER DETAILS ON SWM-1 AND SWM-3.
6. TOP OF BERM ELEVATION FOR TEMPORARY BASIN IS 390.0. RISER AND BARREL SIZE TO PASS Q-10 STORM EVENT. TO MAXIMIZE SEDIMENT STORAGE CAPACITY, DO NOT CONSTRUCT EMERGENCY SPILLWAY UNTIL STABILIZATION PHASE OF THE PROJECT. SEE STABILIZATION SITE PLAN 10.

653.40 - INLET PROTECTION DEVICE, TYPE I
STA. 19+761.6, LT (FILTER FABRIC)
STA. 19+794.6, LT (FILTER FABRIC)
STA. 19+833.4, LT (FILTER FABRIC)
STA. 19+842.4, RT (FILTER FABRIC)
STA. 19+882.7, LT (FILTER FABRIC)
STA. 19+922.5, LT (FILTER FABRIC)

653.55 - PROJECT DEMARCATION FENCE
STA. 19+760.0 TO STA. 19+766.6, LT
STA. 19+760.0 TO STA. 19+848.4, RT
STA. 19+770.4 TO STA. 19+799.2, LT
STA. 19+802.6 TO STA. 19+825.4, LT
STA. 19+827.4 TO STA. 19+836.3, LT
STA. 19+857.4 TO STA. 19+888.9, LT
STA. 19+865.1 TO STA. 19+955.8, RT
STA. 19+905.5 TO STA. 19+909.9, LT
STA. 19+911.1 TO STA. 19+966.0, RT

653.50 - BARRIER FENCE
STA. 19+966.0 TO STA. 19+978.0, RT

AREA NUMBER	653.20 - TEMPORARY EROSION MATTING
	AREAS (SM)
3	1417.8

DATUM
VERTICAL NAVD88
HORIZONTAL NAD83(92)

STA 19+760 TO 19+980

0 10 20
SCALE 1:250

Stantec

PROJECT NAME: DANVILLE
PROJECT NUMBER: F EGC 028-3(32)

FILE NAME: ...\plotfiles\EPSC EPR-10.ptf
DESIGN SUPERVISOR: GARY SANTY
DESIGNED BY: STANTEC
EPSC PRE-CONSTRUCTION PLAN EPR-10
PLOT DATE: 1/18/2011
DRAWN BY: STANTEC
CHECKED BY: STANTEC
SHEET 116 OF 306

1/18/2011 1:52:03 PM v:\1953\active\195310033_10192\highway\plotfiles\EPSC EPR-10.ptf

VTrans Metric

N

VT STATE PLANE GRID

MATCH TO EPSC PRE-CONSTRUCTION SITE PLAN 3

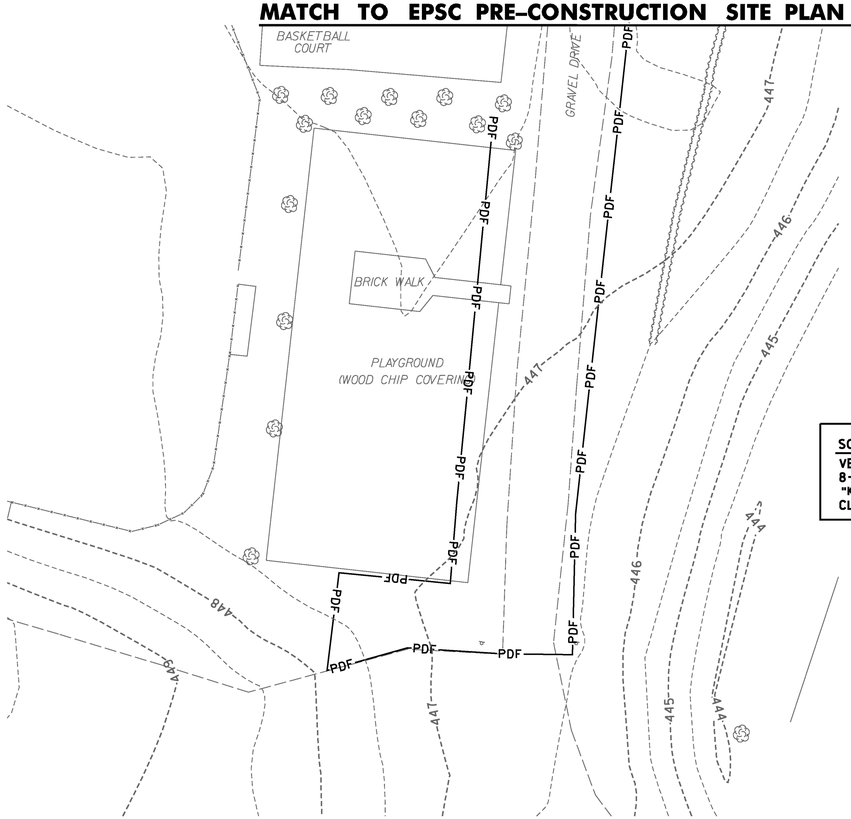

653.55 – PROJECT DEMARCATION FENCE
STA. 18+762.9 TO 18+803.4, RT

SOIL CLASSIFICATION A
VERSHIRE-LOMBARD COMPLEX
8-15% SLOPES, ROCKY
"K" FACTOR = 0.37
CLASSIFIED HIGHLY ERODIBLE

NOTE:
1. SEE EPSC PRE-CONSTRUCTION SITE PLAN EPR-1 FOR GENERAL NOTES AND LEGEND

DATUM
VERTICAL NAVD88
HORIZONTAL NAD83(92)

0 10 20
SCALE 1:250

Stantec

PROJECT NAME: DANVILLE
PROJECT NUMBER: F EGC 028-3(32)

FILE NAME: ...\plotfiles\EPSC EPR-11.ptf
DESIGN SUPERVISOR: GARY SANTY
DESIGNED BY: STANTEC
EPSC PRE-CONSTRUCTION PLAN EPR-11
PLOT DATE: 1/18/2011
DRAWN BY: STANTEC
CHECKED BY: STANTEC
SHEET 117 OF 306

1/18/2011 11:52:05 PM v:\9531\active\95310033.0192\highway\plotfiles\EPSC EPR-11.ptf

AREA NUMBER	651.17 - SEED, WINTER RYE 651.25 - HAY MULCH	651.17 - SEED, WINTER RYE 653.20 - TEMPORARY EROSION MATTING
	AREAS (SM)	AREAS (SM)
1		405.9
2		299.3
3	366.5	
4	412.9	
5		757.9

649.51 – GEOTEXTILE FOR SILT FENCE
STA. 18+573.1 TO 18+600.0, RT
STA. 18+503.9 TO 18+514.4, RT

653.25 – TEMPORARY STONE CHECK DAM, TYPE I
STA. 18+531.5 18+600.0, LT

653.35 – VEHICLE TRACKING PAD
STA. 18+512.1, LT

653.40 – INLET PROTECTION DEVICE, TYPE I
STA. 18+531.1, LT (FILTER FABRIC)

653.41 – INLET PROTECTION DEVICE, TYPE II
STA. 18+531.1, RT (FILTER FIBER)
STA. 18+570.8, LT (FILTER FIBER)
STA. 18+571.0, RT (FILTER FIBER)

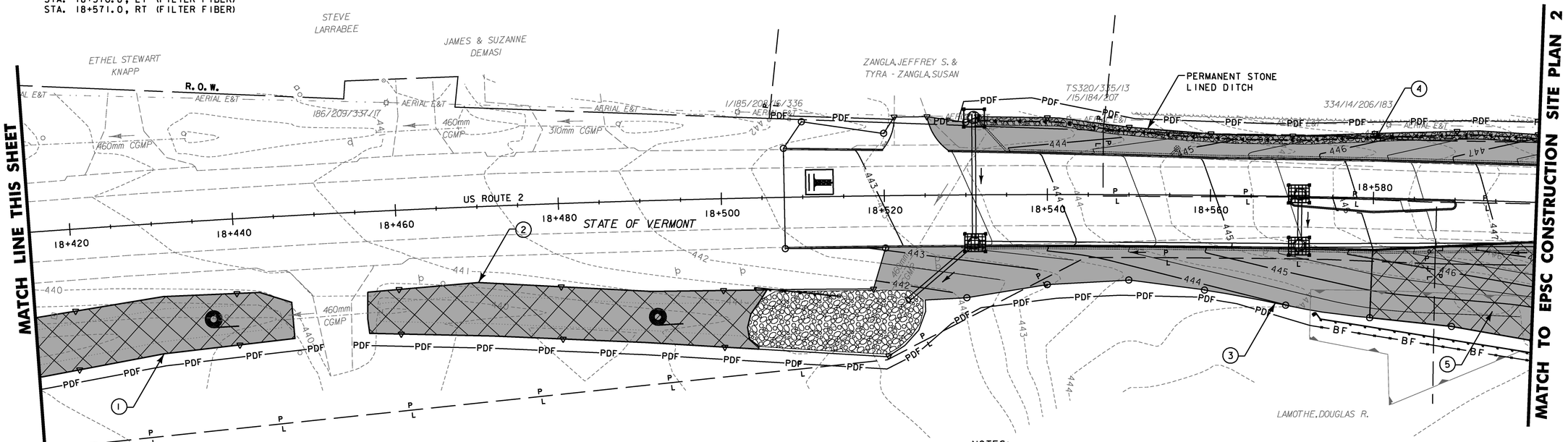

EPSC CONSTRUCTION PLAN EROSION CONTROL LEGEND

- PDF — PROJECT DEMARCATION FENCE
- BF — BARRIER FENCE
- RIGHT OF WAY
- P L — PROPERTY LINE
- LIMITS OF SOIL DISTURBANCE
- TEMPORARY SEEDING & MULCHING
- SILT FENCE
- 444 — FINISHED CONTOURS
- STABILIZED CONSTRUCTION ENTRANCE
- TEMPORARY CHECK DAMS

EPSC CONSTRUCTION PLAN LEGEND CONTINUED

- INLET PROTECTION-FILTER FABRIC (PAID AS ITEM 653.40)
- INLET PROTECTION-FILTER FIBER (PAID AS ITEM 653.41)
- ROLLED EROSION CONTROL PRODUCT (RECP) EROSION MATTING FOR SIDE SLOPES AND DITCHES
- STONE OUTLET PROTECTION
- CLASS III WETLAND BOUNDARY
- WATERSHED BOUNDARY
- SEDIMENT BASIN
- FILTER BAG

NOTES:

1. THESE PLANS SHOW A CONCEPTUAL EROSION CONTROL PLAN, THE CONTRACTOR MUST SUBMIT A TEMPORARY EROSION CONTROL PLAN FOR APPROVAL.
2. TEMPORARY EROSION CONTROL MEASURES ARE CONCEPTUALLY SHOWN. THE CONTRACTOR MAY RELOCATE TEMPORARY MEASURES TO IMPROVE EROSION CONTROL WITH APPROVAL OF THE RESIDENT ENGINEER AND ON SITE COORDINATOR. SILT FENCE SHALL NOT BE INSTALLED ACROSS CONTOURS.
3. THE CONTRACTOR SHALL USE OTHER TEMPORARY EROSION CONTROL MEASURES AS NECESSITATED BY THE SEQUENCE OF CONSTRUCTION OR AS DIRECTED BY THE RESIDENT ENGINEER AND ON SITE COORDINATOR.
4. REFER TO TEMPORARY EROSION CONTROL DETAIL SHEETS FOR ADDITIONAL DETAILS.
5. CONCURRENT EARTH DISTURBANCE SHALL BE LIMITED TO 2 HECTARE (5 ACRES) AT ANY ONE TIME.
6. SEE EPSC NARRATIVE SHEET FOR TIME LIMITS ON DISTURBANCE, WINTER EPSC, INSPECTION AND STAGING/BORROW/WASTE AREA REQUIREMENTS.
7. SEEDING AND EROSION MATTING AREAS CONTINUE TO NEXT SHEET WHERE AREAS ARE BROKEN BY MATCH LINES.

STA 18+507.730 TO 18+600

DATUM
VERTICAL NAVD88
HORIZONTAL NAD83(92)

0 10 20
SCALE 1:250

Stantec

PROJECT NAME: DANVILLE
PROJECT NUMBER: F EGC 028-3(32)

FILE NAME: ...\plotfiles\EPSC ECN-01.ptf
DESIGN SUPERVISOR: GARY SANTY
DESIGNED BY: STANTEC
EPSC CONSTRUCTION PLAN ECN-1
PLOT DATE: 1/18/2011
DRAWN BY: STANTEC
CHECKED BY: STANTEC
SHEET 118 OF 306

1/18/2011 11:52:06 PM v:\0953\active\09530033.0092\highway\plotfiles\EPSC ECN-01.ptf

AREA NUMBER	651.17 - SEED, WINTER RYE 651.25 - HAY MULCH	651.17 - SEED, WINTER RYE 653.20 - TEMPORARY EROSION MATTING
	AREAS (SM)	AREAS (SM)
6	208.1	
7	434.0	
8		785.5
9	60.3	

649.51 – GEOTEXTILE FOR SILT FENCE
STA. 18+600.0 TO 18+602.3, RT
STA. 18+602.5 TO 18+624.6, RT
STA. 18+624.9 TO 18+631.7, RT
STA. 18+633.8 TO 18+639.3, RT
STA. 18+665.1 TO 18+700.0, RT
STA. 18+700.1 TO 18+714.5, RT
STA. 18+708.3 TO 18+752.7, RT
STA. 18+753.3 TO 18+770.0, RT

653.25 – TEMPORARY STONE CHECK DAM, TYPE I
STA. 18+672.1, LT

653.40 – INLET PROTECTION DEVICE, TYPE I
STA. 18+672.1, LT (FILTER FABRIC)

653.41 – INLET PROTECTION DEVICE, TYPE II
STA. 18+625.0, LT (FILTER FIBER)
STA. 18+625.0, RT (FILTER FIBER)
STA. 18+671.8, RT (FILTER FIBER)
STA. 18+672.1, LT (FILTER FIBER)

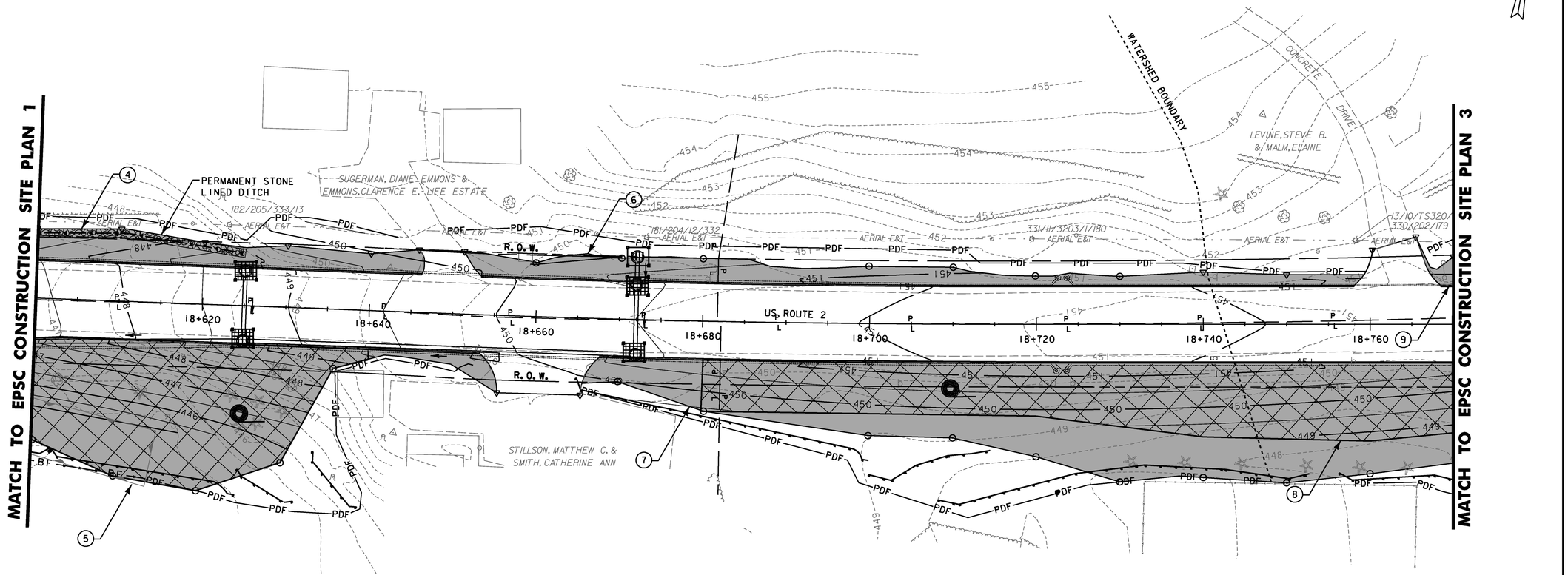

NOTE:
1. SEE EPSC CONSTRUCTION SITE PLAN ECN-1 FOR GENERAL NOTES AND LEGEND

STA 18+600 TO 18+770

DATUM
VERTICAL NAVD88
HORIZONTAL NAD83(92)

0 10 20
SCALE 1:250

PROJECT NAME: DANVILLE	
PROJECT NUMBER: F EGC 028-3(32)	
FILE NAME: ...\plotfiles\EPSC ECN-02.ptf	PLOT DATE: 1/18/2011
DESIGN SUPERVISOR: GARY SANTY	DRAWN BY: STANTEC
DESIGNED BY: STANTEC	CHECKED BY: STANTEC
EPSC CONSTRUCTION PLAN ECN-2	SHEET 119 OF 306

1/18/2011 11:52:09 PM v:\0953\active\09530033.0192\highway\plotfiles\EPSC ECN-02.ptf

649.51 – GEOTEXTILE FOR SILT FENCE
STA. 18+770.0 TO 18+773.7, RT
STA. 18+772.7 TO 18+797.1, RT
STA. 18+821.3 TO 18+830.2, RT
STA. 18+833.0 TO 18+840.6, RT
STA. 18+847.1 TO 18+851.1, RT
STA. 18+859.7 TO 18+864.5, RT
STA. 18+873.2 TO 18+876.9, RT

653.40 – INLET PROTECTION DEVICE, TYPE I
STA. 1+011.1, RT (FILTER FABRIC)
STA. 1+018.2, LT (FILTER FABRIC)
STA. 1+021.2, RT (FILTER FABRIC)

653.41 – INLET PROTECTION DEVICE, TYPE II
STA. 18+786.1, LT (FILTER FIBER)
STA. 18+786.1, RT (FILTER FIBER)
STA. 18+835.1, RT (FILTER FIBER)
STA. 18+835.1, LT (FILTER FIBER)
STA. 18+885.0, RT (FILTER FIBER)
STA. 18+885.0, LT (FILTER FIBER)
STA. 18+912.5, RT (FILTER FIBER)

AREA NUMBER	651.17 - SEED, WINTER RYE 651.25 - HAY MULCH	651.17 - SEED, WINTER RYE 653.20 - TEMPORARY EROSION MATTING
	AREAS (SM)	AREAS (SM)
10	21.6	
11	97.0	
12	733.3	
13	278.4	
14	237.3	
15	77.6	
16	337.9	
17	37.8	
18	41.4	

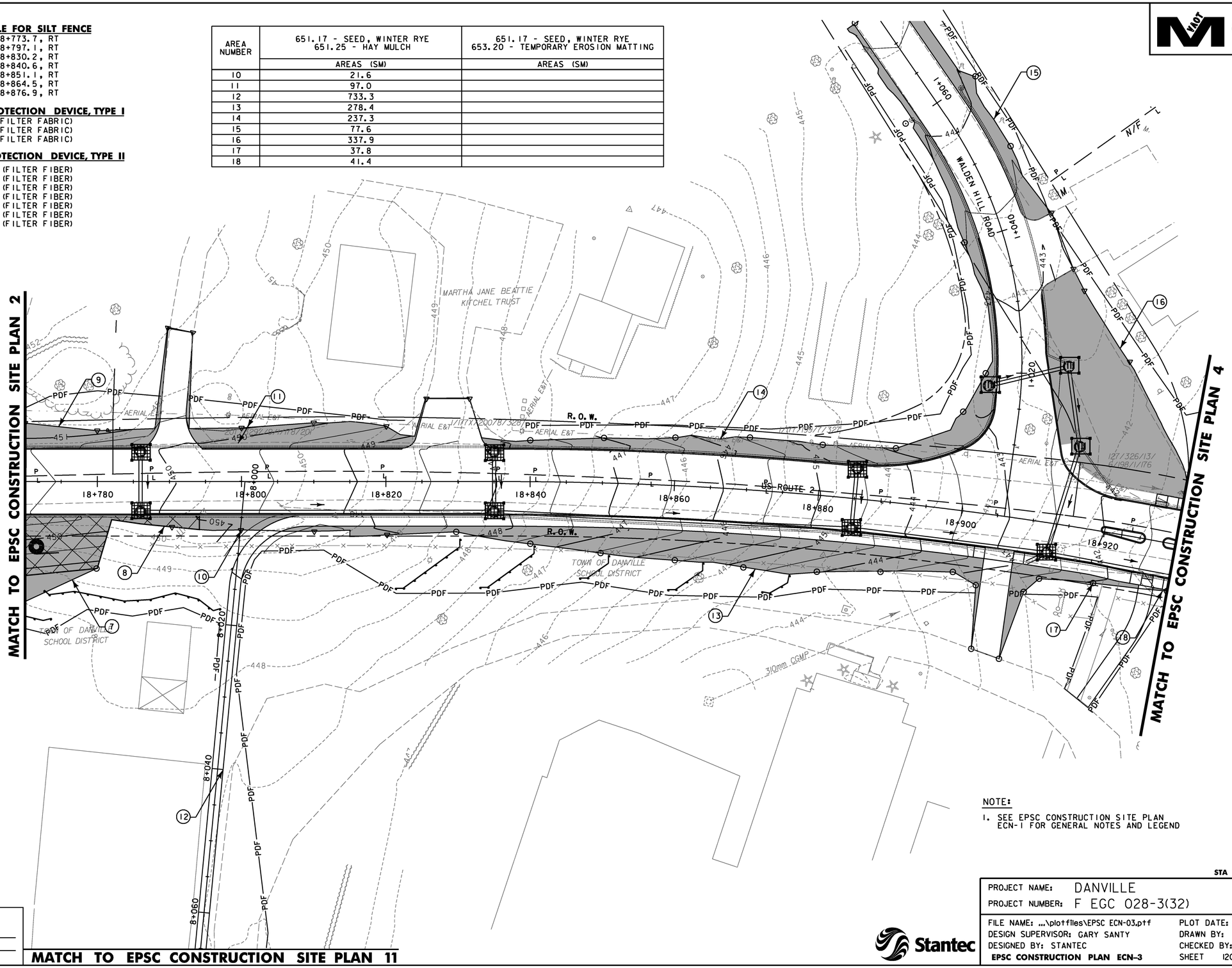

NOTE:
1. SEE EPSC CONSTRUCTION SITE PLAN ECN-1 FOR GENERAL NOTES AND LEGEND

STA 18+770 TO 18+930

DATUM
VERTICAL NAVD88
HORIZONTAL NAD83(92)

PROJECT NAME: DANVILLE
PROJECT NUMBER: F EGC 028-3(32)

FILE NAME: ...\plotfiles\EPSC ECN-03.ptf
DESIGN SUPERVISOR: GARY SANTY
DESIGNED BY: STANTEC
EPSC CONSTRUCTION PLAN ECN-3
PLOT DATE: 1/18/2011
DRAWN BY: STANTEC
CHECKED BY: STANTEC
SHEET 120 OF 306

1/18/2011 1:52:10 PM v:\1953\active\195310033.0092\highway\plotfiles\EPSC ECN-03.ptf

649.51 – GEOTEXTILE FOR SILT FENCE
STA. 18+935.1 TO 18+936.6, LT
STA. 18+945.1 TO 18+951.7, LT
STA. 18+999.1 TO 19+026.2, LT

653.40 – INLET PROTECTION DEVICE, TYPE I
STA. 19+026.9, LT

653.41 – INLET PROTECTION DEVICE, TYPE II)
STA. 18+936.1, LT
STA. 18+936.1, RT
STA. 18+937.8, LT
STA. 18+989.0, LT
STA. 18+989.0, RT
STA. 19+030.6, LT
STA. 19+037.0, RT

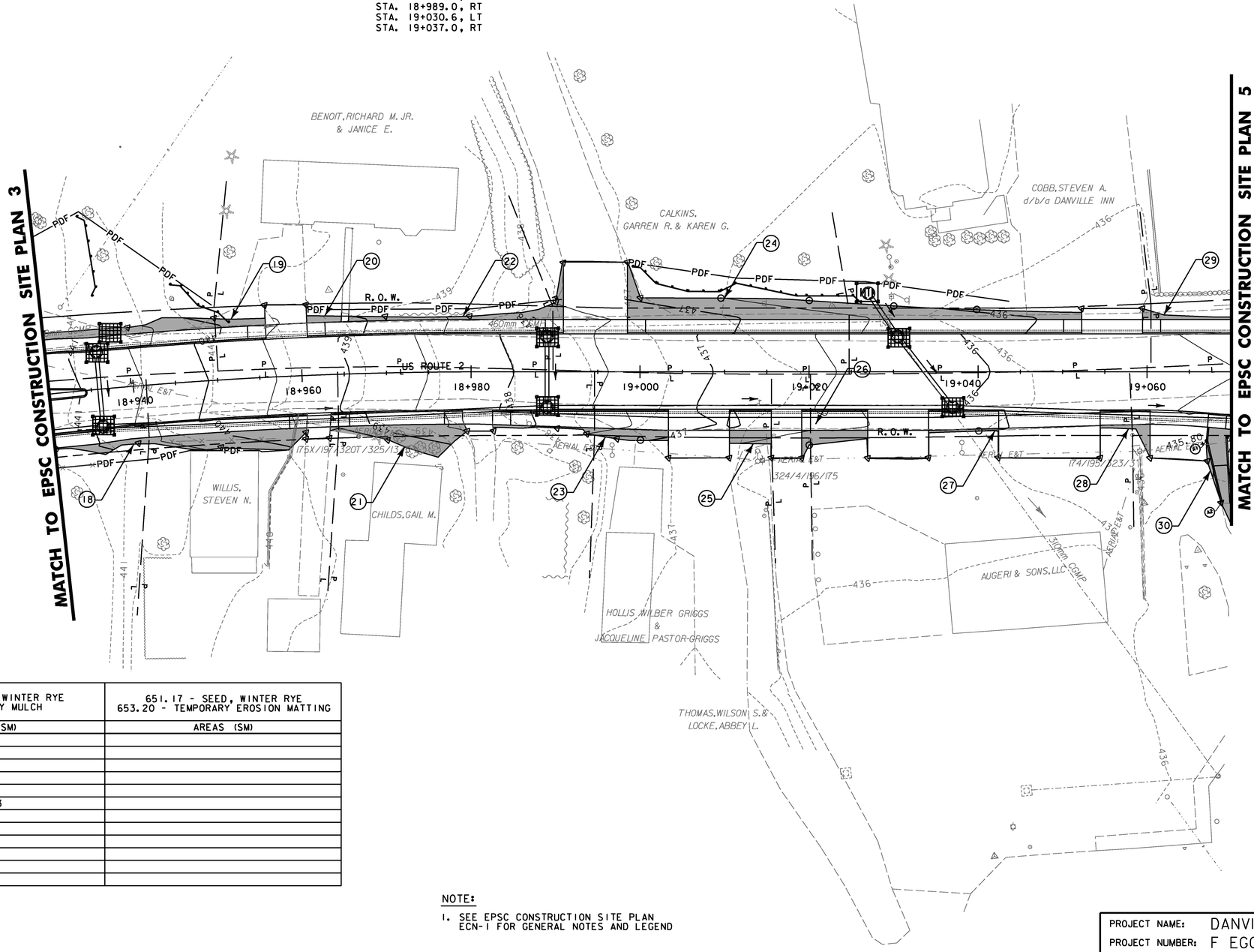

AREA NUMBER	651.17 - SEED, WINTER RYE 651.25 - HAY MULCH	651.17 - SEED, WINTER RYE 653.20 - TEMPORARY EROSION MATTING
	AREAS (SM)	AREAS (SM)
19	27.1	
20	3.2	
21	32.3	
22	19.5	
23	13.8	
24	101.3	
25	7.7	
26	11.6	
27	2.1	
28	5.4	
29	24.4	
30	47.6	

NOTE:
1. SEE EPSC CONSTRUCTION SITE PLAN ECN-1 FOR GENERAL NOTES AND LEGEND

DATUM
VERTICAL NAVD88
HORIZONTAL NAD83(92)

0 10 20
SCALE 1:250

STA 18+930 TO 19+070

PROJECT NAME: DANVILLE
PROJECT NUMBER: F EGC 028-3(32)

FILE NAME: ...\plotfiles\EPSC ECN-04.ptf
DESIGN SUPERVISOR: GARY SANTY
DESIGNED BY: STANTEC
EPSC CONSTRUCTION PLAN ECN-4
PLOT DATE: 1/18/2011
DRAWN BY: STANTEC
CHECKED BY: STANTEC
SHEET 121 OF 306

N
VT STATE PLANE GRID

1/18/2011 11:52:13 PM v:\9531\active\195300331.0192\highway\plotfiles\EPSC ECN-04.ptf

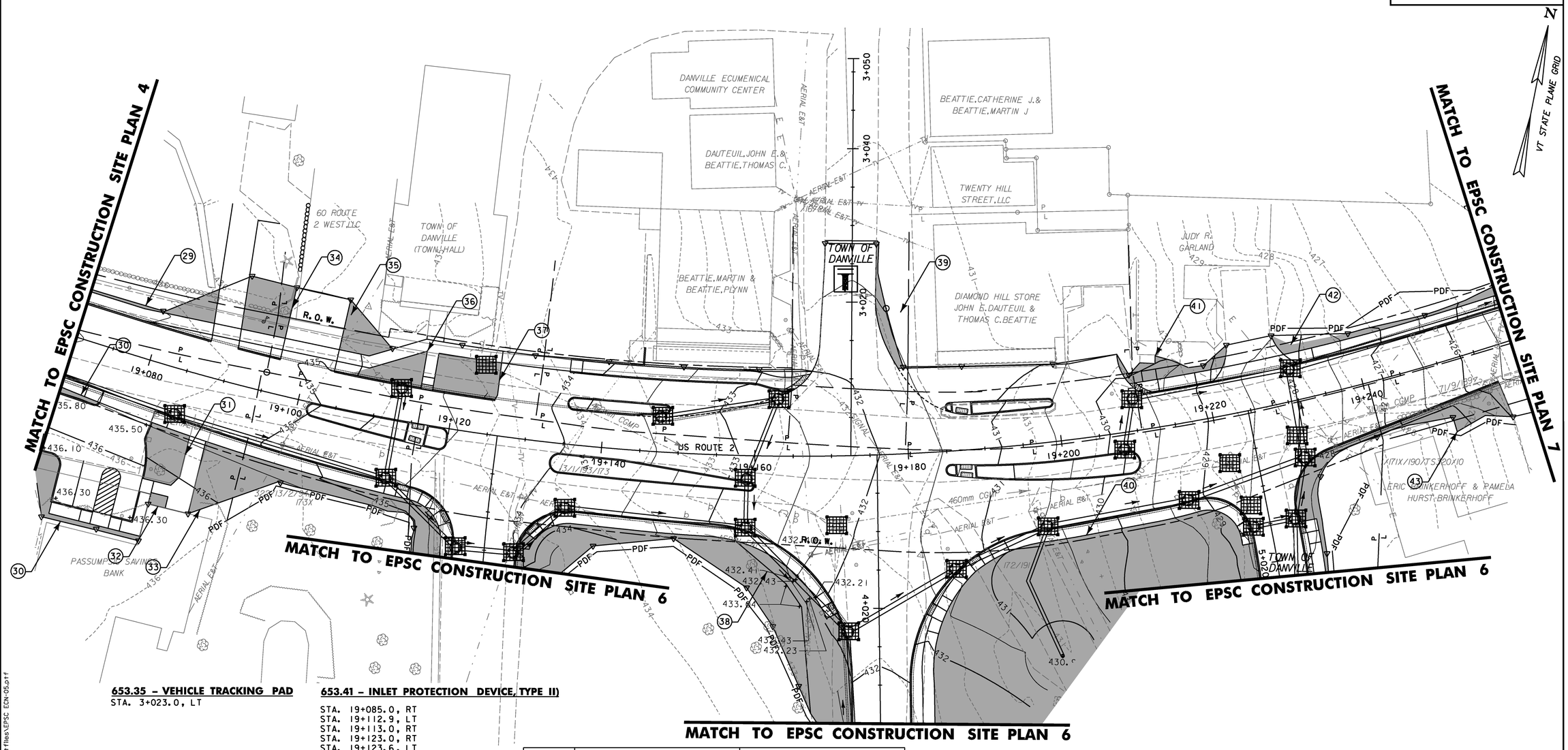

653.35 – VEHICLE TRACKING PAD
STA. 3+023.0, LT

653.41 – INLET PROTECTION DEVICE, TYPE II)

STA. 19+085.0, RT
STA. 19+112.9, LT
STA. 19+113.0, RT
STA. 19+123.0, RT
STA. 19+123.6, LT
STA. 19+130.3, RT
STA. 19+136.0, RT
STA. 19+147.7, LT
STA. 19+158.8, RT
STA. 19+159.0, RT
STA. 19+163.2, LT
STA. 19+170.5, RT
STA. 19+171.8, RT
STA. 19+185.2, RT
STA. 19+197.1, RT
STA. 19+208.0, RT
STA. 19+209.9, LT
STA. 19+215.1, RT
STA. 19+221.0, RT
STA. 19+222.4, RT
STA. 19+222.6, RT
STA. 19+227.8, RT
STA. 19+230.2, RT
STA. 19+230.5, RT
STA. 19+231.2, LT

AREA NUMBER	651.17 - SEED, WINTER RYE 651.25 - HAY MULCH	651.17 - SEED, WINTER RYE 653.20 - TEMPORARY EROSION MATTING
	AREAS (SM)	AREAS (SM)
31	34.9	
32	3.5	
33	213.5	
34	42.0	
35	25.5	
36	23.4	
37	40.5	
38	529.3	
39	15.1	
40	3117.6	
41	24.3	
42	26.2	
43	83.2	

NOTE:

1. SEE EPSC CONSTRUCTION SITE PLAN ECN-1 FOR GENERAL NOTES AND LEGEND

STA 19+070 TO 19+260

DATUM

VERTICAL	NAVD88
HORIZONTAL	NAD83(92)

0 10 20
SCALE 1:250

Stantec

PROJECT NAME: DANVILLE
PROJECT NUMBER: F EGC 028-3(32)

FILE NAME: ...\plotfiles\EPSC ECN-05.ptf
DESIGN SUPERVISOR: GARY SANTY
DESIGNED BY: STANTEC
EPSC CONSTRUCTION PLAN ECN-5

PLOT DATE: 1/18/2011
DRAWN BY: STANTEC
CHECKED BY: STANTEC
SHEET 122 OF 306

1/18/2011 1:52:15 PM v:\1953\active\195310033_10192\highway\plotfiles\EPSC ECN-05.ptf

MATCH TO EPSC CONSTRUCTION SITE PLAN 5

MATCH TO EPSC CONSTRUCTION SITE PLAN 5

MATCH TO EPSC CONSTRUCTION SITE PLAN 5

VTRANS Metric

649.51 – GEOTEXTILE FOR SILT FENCE
STA. 2+223.5 TO 2+227.2, LT
STA. 2+226.7 TO 2+233.8, LT
STA. 5+055.2 TO 5+058.7, RT
STA. 5+087.7 TO 5+105.0, LT
STA. 5+101.2 TO 5+106.1, LT

653.35 – VEHICLE TRACKING PAD
STA. 2+242.1, LT
STA. 4+127.3, RT

N
VT STATE PLANE GRID

AREA NUMBER	651.17 - SEED, WINTER RYE 651.25 - HAY MULCH	651.17 - SEED, WINTER RYE 653.20 - TEMPORARY EROSION MATTING
	AREAS (SM)	AREAS (SM)
43	20.4	
44	9.8	
45	27.8	
46	13.9	
47	6.7	
48	40.6	
49	34.9	
50	4.1	
51	10.6	
52	2.8	
53	29.8	
54	11.6	
55		114.0
56	12.9	
57	7.8	
58	37.8	
59	6.9	

653.41 – INLET PROTECTION DEVICE, TYPE II)
STA. 2+105.0, LT (FILTER FIBER)
STA. 2+105.0, RT (FILTER FIBER)
STA. 2+134.9, LT (FILTER FIBER)
STA. 2+134.9, RT (FILTER FIBER)
STA. 2+157.0, LT (FILTER FIBER)
STA. 2+190.1, LT (FILTER FIBER)
STA. 2+205.5, LT (FILTER FIBER)
STA. 2+207.8, RT (FILTER FIBER)
STA. 2+224.9, LT (FILTER FIBER)
STA. 5+070.1, LT (FILTER FIBER)
STA. 5+070.1, RT (FILTER FIBER)
STA. 5+089.0, LT (FILTER FIBER)

NOTE:
1. SEE EPSC CONSTRUCTION SITE PLAN ECN-1 FOR GENERAL NOTES AND LEGEND

DATUM
VERTICAL NAVD88
HORIZONTAL NAD83(92)

0 10 20
SCALE 1:250

Stantec

PROJECT NAME: DANVILLE
PROJECT NUMBER: F EGC 028-3(32)

FILE NAME: ...\plotfiles\EPSC ECN-06.ptf
DESIGN SUPERVISOR: GARY SANTY
DESIGNED BY: STANTEC
EPSC CONSTRUCTION PLAN ECN-6
PLOT DATE: 1/18/2011
DRAWN BY: STANTEC
CHECKED BY: STANTEC
SHEET 123 OF 306

1/18/2011 11:52:18 PM v:\9513\active\95130033.1092\highway\plotfiles\EPSC ECN-06.ptf

AREA NUMBER	651.17 - SEED, WINTER RYE 651.25 - HAY MULCH	651.17 - SEED, WINTER RYE 653.20 - TEMPORARY EROSION MATTING
	AREAS (SM)	AREAS (SM)
60	220.2	
61	75.9	
62	24.9	
63	128.5	
64	24.0	
65	179.6	
66		373.0
67	76.0	
68	153.5	

649.51 – GEOTEXTILE FOR SILT FENCE
STA. 19+411.1 TO 19+414.7, LT
STA. 19+414.7 TO 19+419.3, RT
STA. 6+009.7 TO 6+019.6, LT
STA. 7+016.7 TO 7+027.9, RT

653.35 – VEHICLE TRACKING PAD
STA. 6+023.7
STA. 7+024.3

653.40 – INLET PROTECTION DEVICE, TYPE I
STA. 19+421.0, LT (FILTER FABRIC)

653.45 – FILTER BAG
STA. 19+446.0, LT

653.41 – INLET PROTECTION DEVICE, TYPE II)
STA. 19+285.0, RT (FILTER FIBER)
STA. 19+285.1, LT (FILTER FIBER)
STA. 19+301.3, RT (FILTER FIBER)
STA. 19+344.0, LT (FILTER FIBER)
STA. 19+418.0, LT (FILTER FIBER)
STA. 19+418.0, RT (FILTER FIBER)

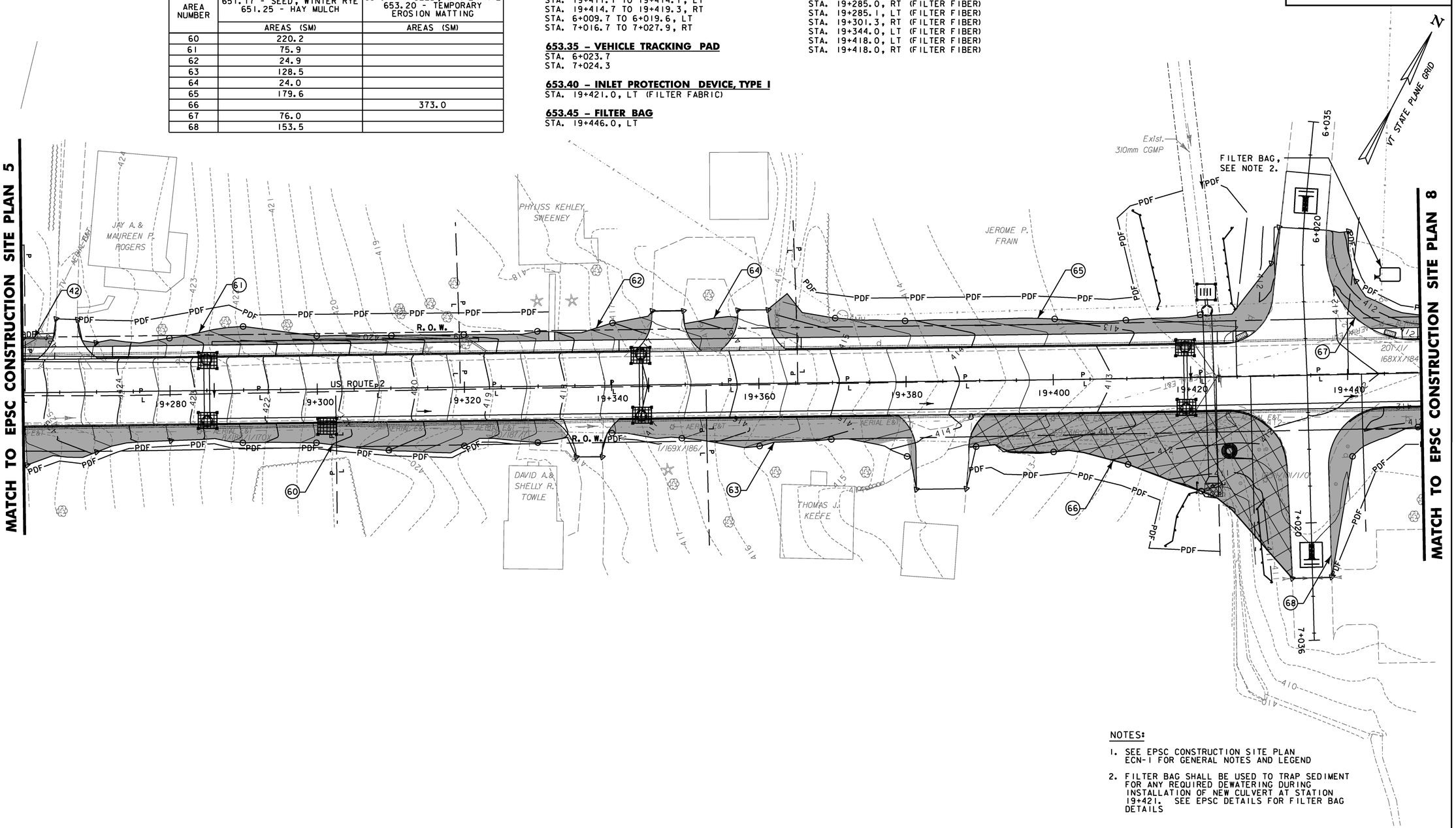

NOTES:

1. SEE EPSC CONSTRUCTION SITE PLAN ECN-1 FOR GENERAL NOTES AND LEGEND
2. FILTER BAG SHALL BE USED TO TRAP SEDIMENT FOR ANY REQUIRED DEWATERING DURING INSTALLATION OF NEW CULVERT AT STATION 19+421. SEE EPSC DETAILS FOR FILTER BAG DETAILS

STA 19+260 TO 19+450

DATUM
VERTICAL NAVD88
HORIZONTAL NAD83(92)

SCALE 1:250

PROJECT NAME: DANVILLE	
PROJECT NUMBER: F EGC 028-3(32)	
FILE NAME: ...\plotfiles\EPSC ECN-07.ptf	PLOT DATE: 1/18/2011
DESIGN SUPERVISOR: GARY SANTY	DRAWN BY: STANTEC
DESIGNED BY: STANTEC	CHECKED BY: STANTEC
EPSC CONSTRUCTION PLAN ECN-7	SHEET 124 OF 306

1/18/2011 1:52:20 PM v:\1953\active\19530033.0092\highway\plotfiles\EPSC ECN-07.ptf

AREA NUMBER	651.17 - SEED, WINTER RYE 651.25 - HAY MULCH	651.17 - SEED, WINTER RYE 653.20 - TEMPORARY EROSION MATTING
	AREAS (SM)	AREAS (SM)
69	24.3	
70	607.8	
71		290.8
72	61.6	
73	52.4	
74	2125.5	

653.25 – TEMPORARY STONE CHECK DAM, TYPE I
STA. 19+490.0 TO 19+590.0, LT

653.41 – INLET PROTECTION DEVICE, TYPE II
STA. 19+463.0, LT (FILTER FIBER)
STA. 19+463.0, RT (FILTER FIBER)
STA. 19+534.9, RT (FILTER FIBER)
STA. 19+535.1, LT (FILTER FIBER)

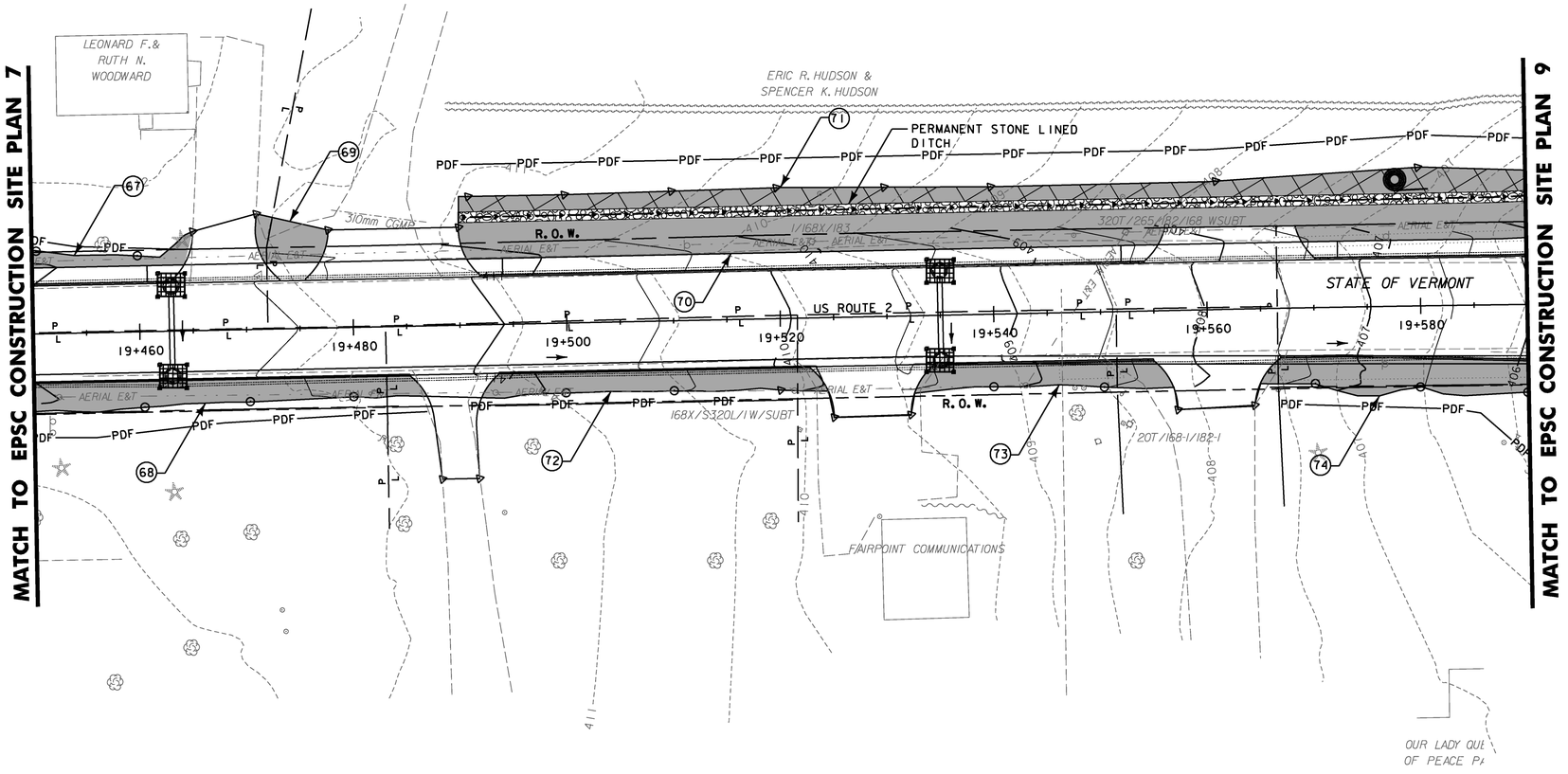

NOTE:
1. SEE EPSC CONSTRUCTION SITE PLAN ECN-1 FOR GENERAL NOTES AND LEGEND

STA 19+450 TO 19+590

DATUM
VERTICAL NAVD88
HORIZONTAL NAD83(92)

0 10 20
SCALE 1:250

PROJECT NAME: DANVILLE	
PROJECT NUMBER: F EGC 028-3(32)	
FILE NAME: ...\plotfiles\EPSC ECN-08.ptf	PLOT DATE: 1/18/2011
DESIGN SUPERVISOR: GARY SANTY	DRAWN BY: STANTEC
DESIGNED BY: STANTEC	CHECKED BY: STANTEC
EPSC CONSTRUCTION PLAN ECN-8	SHEET 125 OF 306

1/18/2011 11:52:23 PM v:\1953\active\195310033_i092\highway\plotfiles\EPSC ECN-08.ptf

AREA NUMBER	651.17 - SEED, WINTER RYE 651.25 - HAY MULCH	651.17 - SEED, WINTER RYE 653.20 - TEMPORARY EROSION MATTING
	AREAS (SM)	AREAS (SM)
75		281.1
76	72.3	
77	211.1	
78		163.7

649.51 – GEOTEXTILE FOR SILT FENCE
STA. 19+591.9 TO 19+593.0, RT
STA. 19+607.5 TO 19+608.0, RT

653.25 – TEMPORARY STONE CHECK DAM, TYPE I
STA. 19+590.0 TO 19+667.7, LT
STA. 19+651.7 TO 19+760.0, RT

653.40 – INLET PROTECTION DEVICE, TYPE I
STA. 19+666.2, LT (FILTER FABRIC)
STA. 19+691.0, LT (FILTER FABRIC)
STA. 19+713.2, LT (FILTER FABRIC)

653.41 – INLET PROTECTION DEVICE, TYPE II)
STA. 19+605.1, LT (FILTER FIBER)
STA. 19+605.1, RT (FILTER FIBER)
STA. 19+646.0, LT (FILTER FIBER)
STA. 19+646.1, RT (FILTER FIBER)

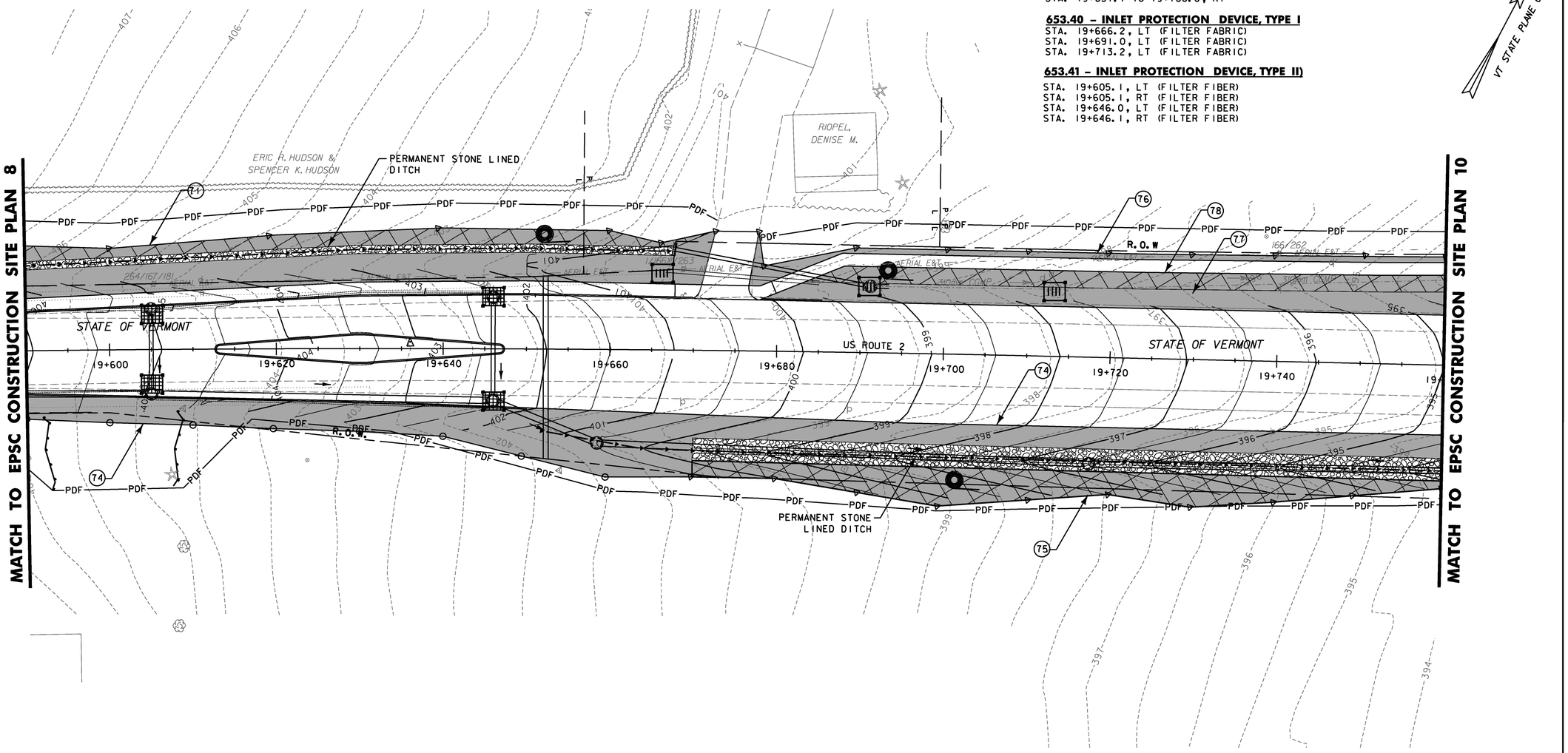

NOTE:
1. SEE EPSC CONSTRUCTION SITE PLAN ECN-1 FOR GENERAL NOTES AND LEGEND

STA 19+590 TO 19+760

DATUM
VERTICAL NAVD88
HORIZONTAL NAD83(92)

0 10 20
SCALE 1:250

PROJECT NAME: DANVILLE	
PROJECT NUMBER: F EGC 028-3(32)	
FILE NAME: ...\plotfiles\EPSC ECN-09.ptf	PLOT DATE: 1/18/2011
DESIGN SUPERVISOR: GARY SANTY	DRAWN BY: STANTEC
DESIGNED BY: STANTEC	CHECKED BY: STANTEC
EPSC CONSTRUCTION PLAN ECN-9	SHEET 126 OF 306

1/18/2011 11:52:25 PM v:\1953\active\19530033_1092\highway\plotfiles\EPSC ECN-09.ptf

VT STATE PLANE GRID

MATCH TO EPSC CONSTRUCTION SITE PLAN 9

MATCH LINE THIS SHEET

R. O. W.

EVERETT W.DREW AND NORMA S.DREW REVOCABLE TRUST

STATE OF VERMONT

US ROUTE 2

TOWN OF DANVILLE

TEMPORARY CHECK DAMS

PERMANENT STONE LINED DITCH

UN-NAMED TRIBUTARY TO WATER ANDRIC

AREA NUMBER	651.17 - SEED, WINTER RYE 651.25 - HAY MULCH	651.17 - SEED, WINTER RYE 653.20 - TEMPORARY EROSION MATTING
	AREAS (SM)	AREAS (SM)
79	19.1	
80	89.2	
81		55.0
82	553.4	
83	16.8	
84		51.0
85	107.2	
86		2301.2
87	276.5	
88		285.6
89		1417.8

649.51 – GEOTEXTILE FOR SILT FENCE
STA. 19+832.7 TO 19+835.6, RT
STA. 19+839.6 TO 19+845.9, RT
STA. 19+843.6 TO 19+843.7, RT
STA. 19+844.2 TO 19+844.8, RT

653.25 – TEMPORARY STONE CHECK DAM, TYPE I
STA. 19+760.0 RO 19+784.9, RT
STA. 19+858.5 TO 19+909.2, RT
STA. 19+869.2 TO 19+909.2, RT

653.35 – VEHICLE TRACKING PAD
STA. 19+847.4, RT
STA. 19+850.5, RT
STA. 19+907.4, RT

653.40 – INLET PROTECTION DEVICE, TYPE I
STA. 19+761.8, LT (FILTER FABRIC)
STA. 19+794.7, LT (FILTER FABRIC)
STA. 19+833.5, LT (FILTER FABRIC)
STA. 19+842.7, RT (FILTER FABRIC)
STA. 19+882.6, LT (FILTER FABRIC)
STA. 19+922.6, LT (FILTER FABRIC)

653.41 – INLET PROTECTION DEVICE, TYPE II
STA. 19+780.1, RT (FILTER FIBER)

NOTE:
1. SEE EPSC CONSTRUCTION SITE PLAN ECN-1 FOR GENERAL NOTES AND LEGEND

DATUM
VERTICAL NAVD88
HORIZONTAL NAD83(92)

STA 19+760 TO 19+980

SCALE 1:250

PROJECT NAME: DANVILLE
PROJECT NUMBER: F EGC 028-3(32)

FILE NAME: ...\plotfiles\EPSC ECN-10.ptf
DESIGN SUPERVISOR: GARY SANTY
DESIGNED BY: STANTEC
EPSC CONSTRUCTION PLAN ECN-10
PLOT DATE: 1/18/2011
DRAWN BY: STANTEC
CHECKED BY: STANTEC
SHEET 127 OF 306

1/18/2011 11:52:27 PM v:\9531\active\95310033.0192\highway\plotfiles\EPSC ECN-10.ptf

VAOT Metric

N

VT STATE PLANE GRID

MATCH TO EPSC CONSTRUCTION SITE PLAN 3

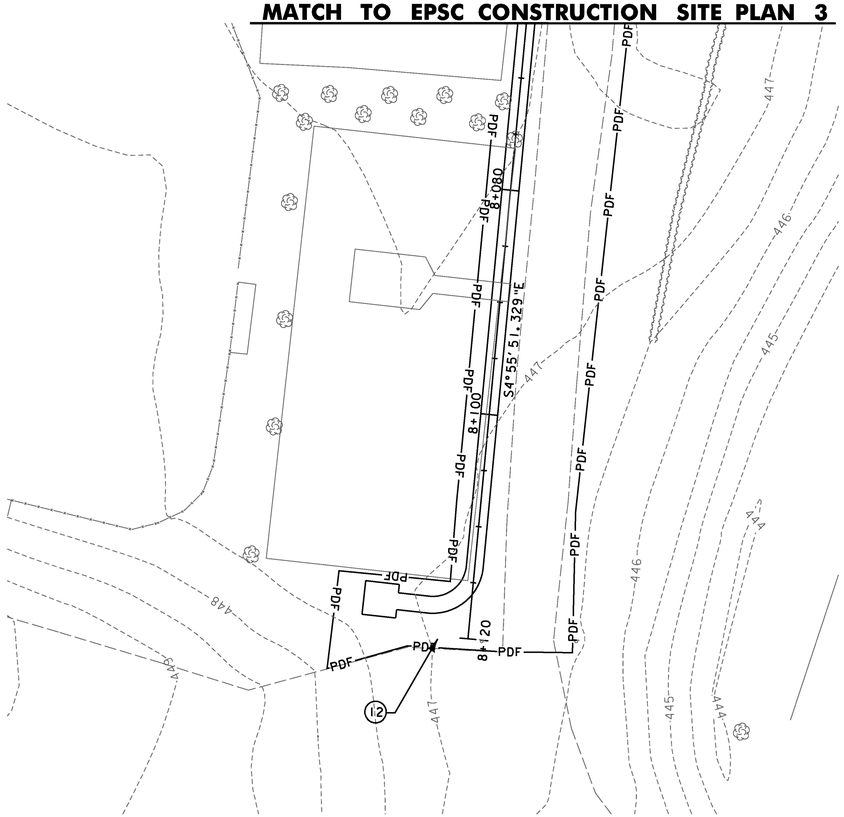

NOTE:

1. SEE EPSC CONSTRUCTION SITE PLAN ECN-1 FOR GENERAL NOTES AND LEGEND

DATUM

VERTICAL NAVD88

HORIZONTAL NAD83(92)

0 10 20

SCALE 1:250

Stantec

PROJECT NAME: DANVILLE

PROJECT NUMBER: F EGC 028-3(32)

FILE NAME: ...\plotfiles\EPSC ECN-11.ptf | PLOT DATE: 1/18/2011

DESIGN SUPERVISOR: GARY SANTY | DRAWN BY: STANTEC

DESIGNED BY: STANTEC | CHECKED BY: STANTEC

EPSC CONSTRUCTION PLAN ECN-11 | SHEET 128 OF 306

1/18/2011 11:52:30 PM v:\0953\active\95300033_0192\highway\plotfiles\EPSC ECN-11.ptf

AREA NUMBER	651.15 - SEED 651.25 - HAY MULCH	651.15 - SEED 653.20 - TEMPORARY EROSION MATTING
	AREAS (SM)	AREAS (SM)
1	97.2	
2		405.9
3		299.3
4	770.2	
5		757.9
6	53.9	
7	503.1	

VTrans Metric

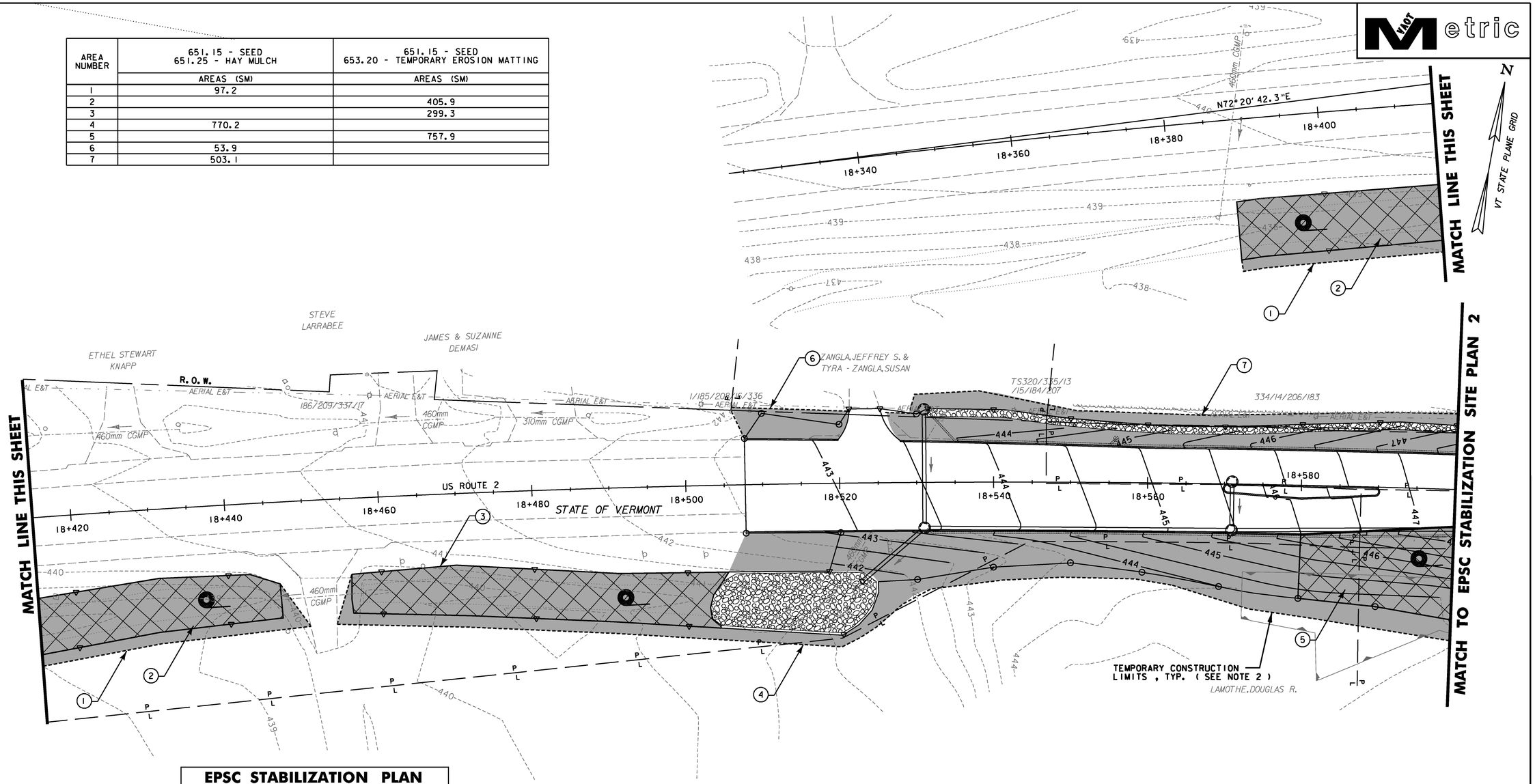

EPSC STABILIZATION PLAN EROSION CONTROL LEGEND

- RIGHT OF WAY
- PROPERTY LINE
- DISTURBED AREAS REQUIRING RE-VEGETATION
- TEMPORARY CONSTRUCTION LIMITS
- LIMITS OF SOIL DISTURBANCE
- 444 FINISHED CONTOURS
- ROLLED EROSION CONTROL PRODUCT (RECP) EROSION MATTING FOR SIDE SLOPES AND DITCHES
- STONE OUTLET & DITCH PROTECTION
- CLASS III WETLAND BOUNDARY

STABILIZATION NOTES:

1. SEE EPSC NARRATIVE SHEETS FOR ADDITIONAL REQUIREMENTS.
2. THE TEMPORARY CONSTRUCTION LIMIT IS THE AREA WITHIN THE PROJECT DEMARCATION FENCE AS SHOWN ON THE EPSC CONSTRUCTION SITE PLAN.

DATUM

VERTICAL NAVD88
HORIZONTAL NAD83(92)

0 10 20
SCALE 1:250

Stantec

STA 18+507.730 TO 18+600

PROJECT NAME: DANVILLE
PROJECT NUMBER: F EGC 028-3(32)

FILE NAME: ...\plotfiles\EPSC EST-01.ptf
DESIGN SUPERVISOR: GARY SANTY
DESIGNED BY: STANTEC
EPSC STABILIZATION PLAN EST-1

PLOT DATE: 1/18/2011
DRAWN BY: STANTEC
CHECKED BY: STANTEC
SHEET 129 OF 306

1/18/2011 11:52:31 PM v:\9531\active\95300033.1092\highway\plotfiles\EPSC EST-01.ptf

AREA NUMBER	651.15 - SEED 651.25 - HAY MULCH	651.15 - SEED 653.20 - TEMPORARY EROSION MATTING
	AREAS (SM)	AREAS (SM)
8	429.8	
9		785.5
10	2725.6	
11	152.4	

VTrans Metric

N

VT STATE PLANE GRID

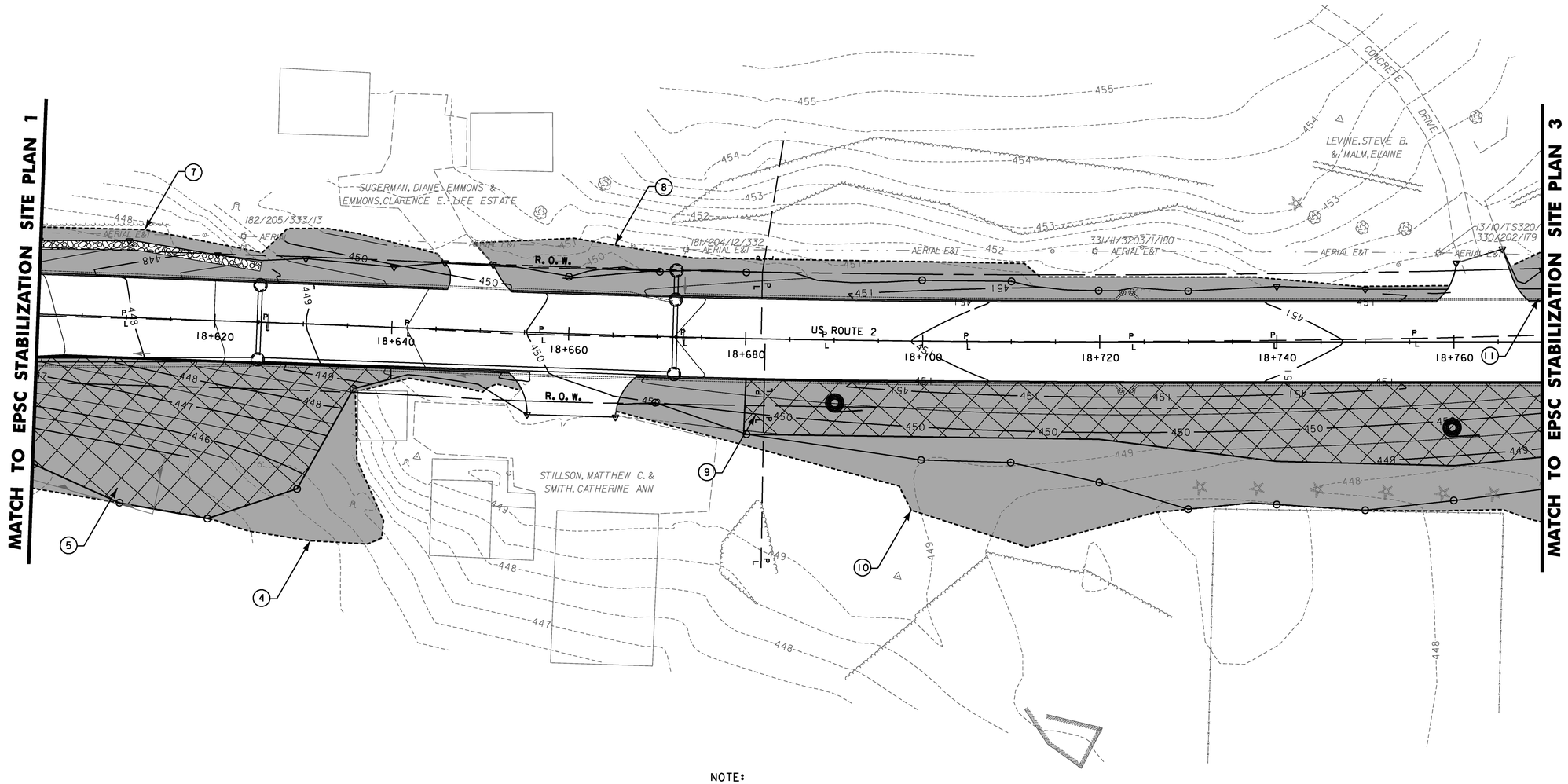

NOTE:

1. SEE EPSC STABILIZATION SITE PLAN EST-1 FOR GENERAL NOTES AND LEGEND

STA 18+600 TO 18+770

DATUM

VERTICAL NAVD88

HORIZONTAL NAD83(92)

0 10 20

SCALE 1:250

Stantec

PROJECT NAME: DANVILLE

PROJECT NUMBER: F EGC 028-3(32)

FILE NAME: ...\plotfiles\EPSC EST-02.ptf | PLOT DATE: 1/18/2011

DESIGN SUPERVISOR: GARY SANTY | DRAWN BY: STANTEC

DESIGNED BY: STANTEC | CHECKED BY: STANTEC

EPSC STABILIZATION PLAN EST-2 | SHEET 130 OF 306

1/18/2011 11:52:33 PM v:\1953\active\19530033.0192\highway\plotfiles\EPSC EST-02.ptf

AREA NUMBER	651.15 - SEED 651.25 - HAY MULCH	651.15 - SEED 653.20 -TEMPORARY EROSION MATTING
	AREAS (SM)	AREAS (SM)
12	166.7	
13	513.8	
14	134.6	
15	633.4	
16	125.5	
17	83.1	

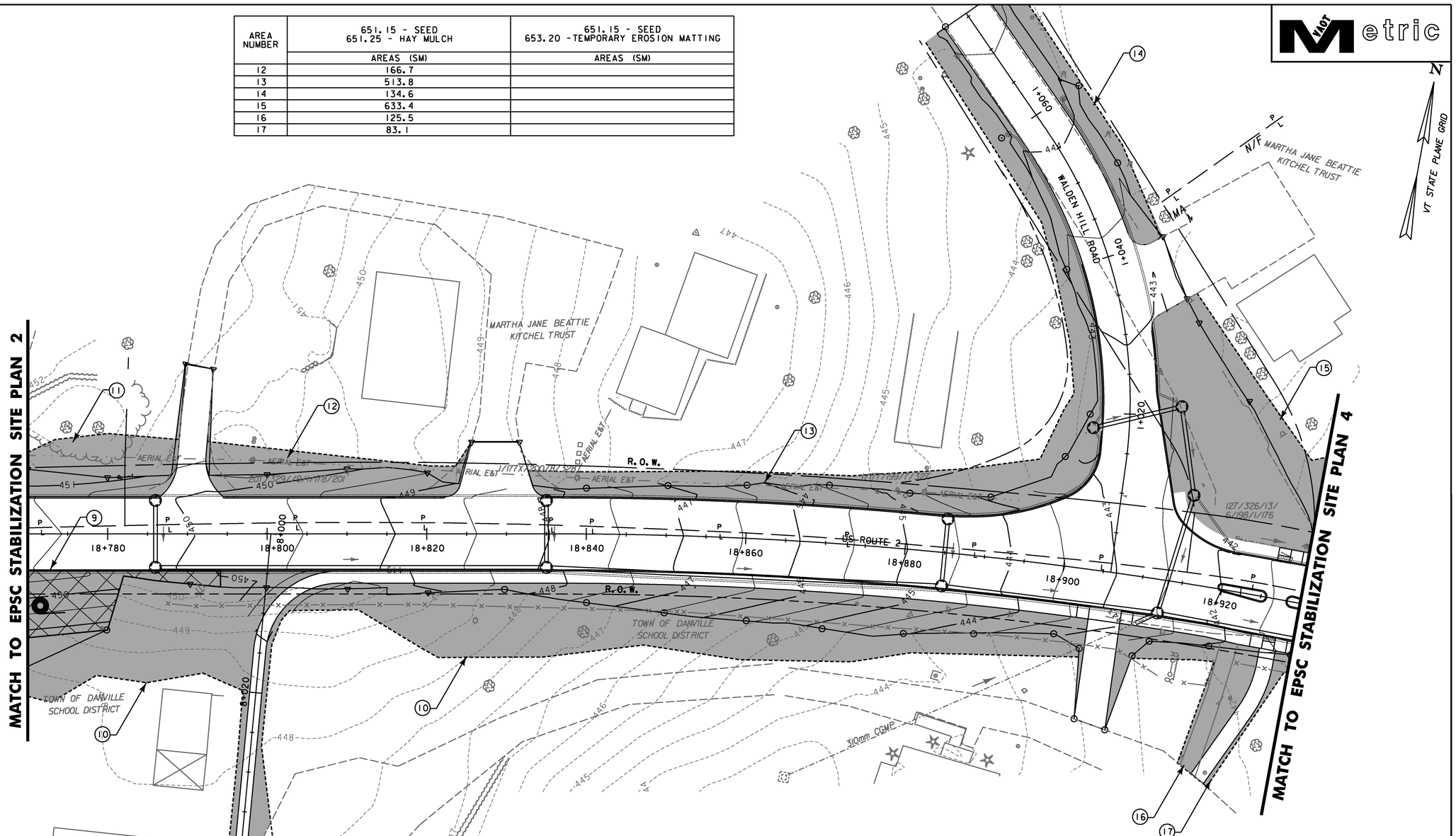

NOTE:

1. SEE EPSC STABILIZATION SITE PLAN EST-1 FOR GENERAL NOTES AND LEGEND

DATUM

VERTICAL NAVD88

HORIZONTAL NAD83(92)

0 10 20

SCALE 1:250

PROJECT NAME: DANVILLE	
PROJECT NUMBER: F EGC 028-3(32)	
FILE NAME: ...\plotfiles\EPSC EST-03.ptf	PLOT DATE: 1/18/2011
DESIGN SUPERVISOR: GARY SANTY	DRAWN BY: STANTEC
DESIGNED BY: STANTEC	CHECKED BY: STANTEC
EPSC STABILIZATION PLAN EST-3	SHEET 131 OF 306

1/18/2011 15:52:35 PM v:\1953\active\195300333.0092\highway\plotfiles\EPSC EST-03.ptf

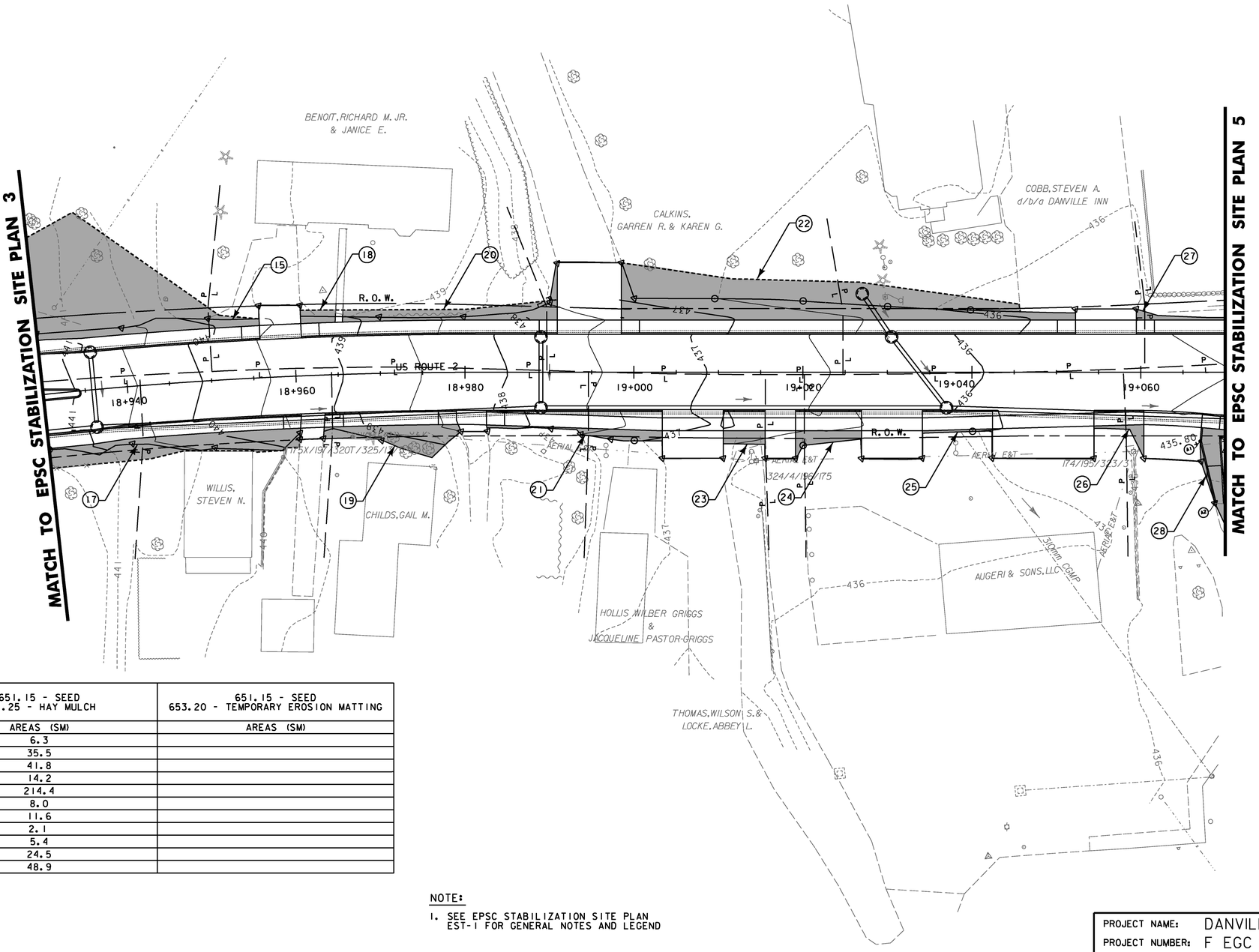

AREA NUMBER	651.15 - SEED 651.25 - HAY MULCH	651.15 - SEED 653.20 - TEMPORARY EROSION MATTING
	AREAS (SM)	AREAS (SM)
18	6.3	
19	35.5	
20	41.8	
21	14.2	
22	214.4	
23	8.0	
24	11.6	
25	2.1	
26	5.4	
27	24.5	
28	48.9	

NOTE:

1. SEE EPSC STABILIZATION SITE PLAN EST-1 FOR GENERAL NOTES AND LEGEND

STA 18+930 TO 19+070

0 10 20
SCALE 1:250

DATUM

VERTICAL NAVD88
HORIZONTAL NAD83(92)

Stantec

PROJECT NAME: DANVILLE
PROJECT NUMBER: F EGC 028-3(32)

FILE NAME: ...\plotfiles\EPSC EST-04.ptf
DESIGN SUPERVISOR: GARY SANTY
DESIGNED BY: STANTEC
EPSC STABILIZATION PLAN EST-4

PLOT DATE: 1/18/2011
DRAWN BY: STANTEC
CHECKED BY: STANTEC
SHEET 132 OF 306

1/18/2011 1:52:37 PM v:\1953\active\195310033_10192\highway\plotfiles\EPSC EST-04.ptf

VTrans Metric

N

VT STATE PLANE GRID

MATCH TO EPSC STABILIZATION SITE PLAN 4

MATCH TO EPSC STABILIZATION SITE PLAN 7

MATCH TO EPSC STABILIZATION SITE PLAN 6

MATCH TO EPSC STABILIZATION SITE PLAN 6

MATCH TO EPSC STABILIZATION SITE PLAN 6

DANVILLE ECUMENICAL COMMUNITY CENTER

BEATTIE,CATHERINE J.& BEATTIE,MARTIN J

DAUTEUIL,JOHN E.& BEATTIE,THOMAS C.

TWENTY HILL STREET,LLC

60 ROUTE 2 WEST,LLC

TOWN OF DANVILLE (TOWN HALL)

BEATTIE,MARTIN & BEATTIE,PLYNN

DIAMOND HILL STORE JOHN E.DAUTEUIL & THOMAS C.BEATTIE

JUDY R. GARLAND

ERIC BRINKERHOFF & PAMELA HURST-BRINKERHOFF

PASSUMPSIC SAVINGS BANK

US ROUTE 2

R. O. W.

TEMPORARY CONSTRUCTION LIMITS

AERIAL E&T

UTILITY E&T

AREA NUMBER	651.15 - SEED 651.25 - HAY MULCH	651.15 - SEED 653.20 - TEMPORARY EROSION MATTING
	AREAS (SM)	AREAS (SM)
29	34.9	
30	3.5	
31	329.9	
32	42.0	
33	25.5	
34	23.2	
35	40.5	
36	1137.3	
37	15.1	
38	3192.3	
39	44.2	
40	76.1	
41	197.3	

NOTE:

1. SEE EPSC STABILIZATION SITE PLAN EST-1 FOR GENERAL NOTES AND LEGEND

STA 19+070 TO 19+260

DATUM

VERTICAL NAVD88

HORIZONTAL NAD83(92)

0 10 20

SCALE 1:250

Stantec

PROJECT NAME: DANVILLE

PROJECT NUMBER: F EGC 028-3(32)

FILE NAME: ...\plotfiles\EPSC EST-05.ptf | PLOT DATE: 1/18/2011

DESIGN SUPERVISOR: GARY SANTY | DRAWN BY: STANTEC

DESIGNED BY: STANTEC | CHECKED BY: STANTEC

EPSC STABILIZATION PLAN EST-5 | SHEET 133 OF 306

1/18/2011 1:52:38 PM v:\0953\active\95300033.0192\highway\plotfiles\EPSC EST-05.ptf

MATCH TO EPSC STABILIZATION SITE PLAN 5

MATCH TO EPSC STABILIZATION SITE PLAN 5

MATCH TO EPSC STABILIZATION SITE PLAN 5

Metric

N

VT STATE PLANE GRID

AREA NUMBER	651.15 - SEED 651.25 - HAY MULCH	651.15 - SEED 653.20 - TEMPORARY EROSION MATTING
	AREAS (SM)	AREAS (SM)
42	9.8	
43	19.0	
44	5.7	
45	9.5	
46	29.0	
47	17.5	
48	64.6	
49	111.0	
50	22.1	
51	45.9	
52	48.8	
53	37.6	
54	29.8	
55	161.2	
56		114.0
57	104.4	
58	14.5	

NOTE:

1. SEE EPSC STABILIZATION SITE PLAN EST-1 FOR GENERAL NOTES AND LEGEND

DATUM

VERTICAL NAVD88

HORIZONTAL NAD83(92)

0 10 20

SCALE 1:250

Stantec

PROJECT NAME: DANVILLE

PROJECT NUMBER: F EGC 028-3(32)

FILE NAME: ...\plotfiles\EPSC EST-06.ptf

DESIGN SUPERVISOR: GARY SANTY

DESIGNED BY: STANTEC

EPSC STABILIZATION PLAN EST-6

PLOT DATE: 1/18/2011

DRAWN BY: STANTEC

CHECKED BY: STANTEC

SHEET 134 OF 306

1/18/2011 11:52:41 PM v:\1953\active\195300033_i092\highway\plotfiles\EPSC EST-06.ptf

VAOT Metric

MATCH TO EPSC STABILIZATION SITE PLAN 5

MATCH TO EPSC STABILIZATION SITE PLAN 8

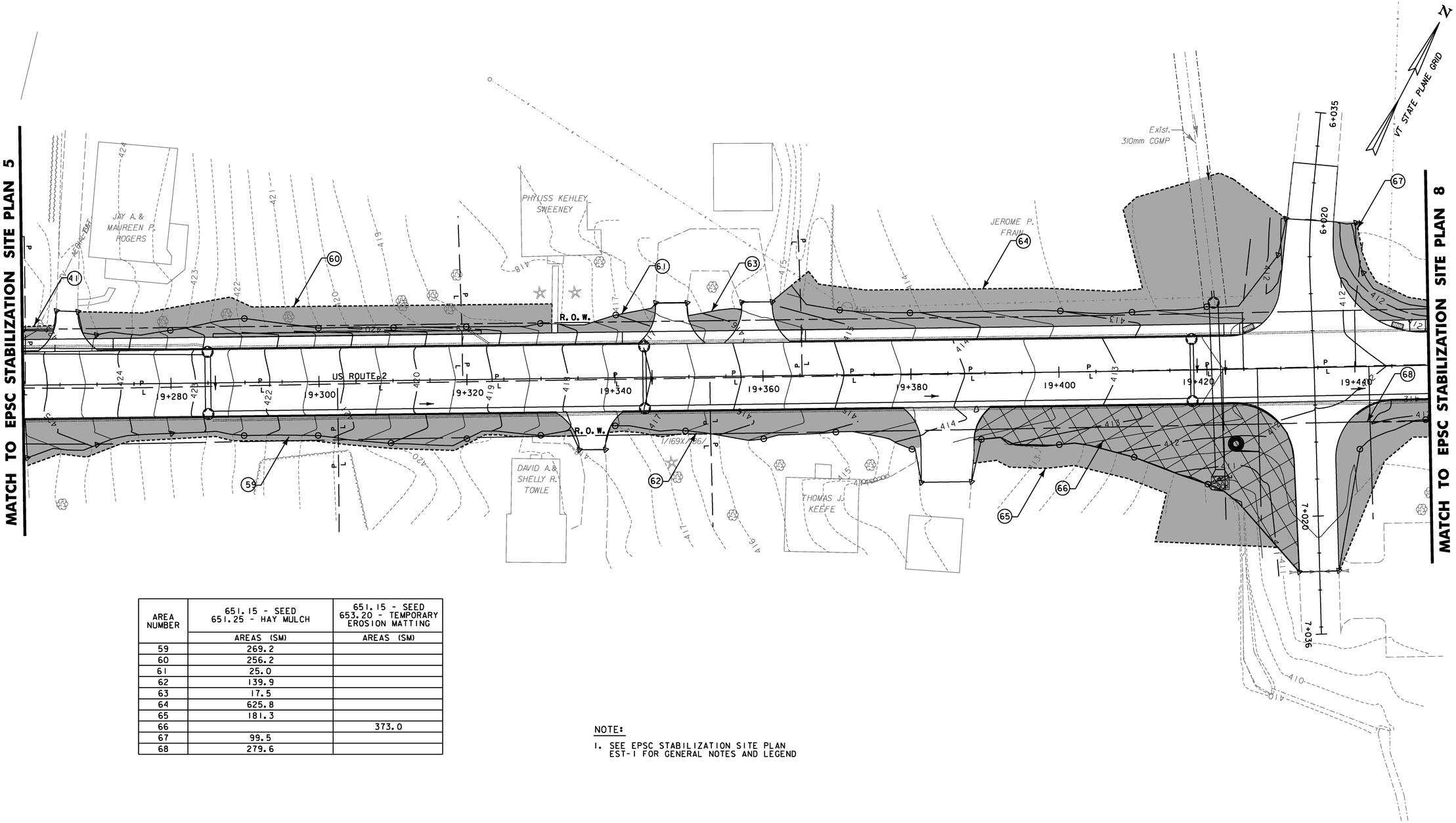

AREA NUMBER	651.15 - SEED 651.25 - HAY MULCH	651.15 - SEED 653.20 - TEMPORARY EROSION MATTING
	AREAS (SM)	AREAS (SM)
59	269.2	
60	256.2	
61	25.0	
62	139.9	
63	17.5	
64	625.8	
65	181.3	
66		373.0
67	99.5	
68	279.6	

NOTE:

1. SEE EPSC STABILIZATION SITE PLAN EST-1 FOR GENERAL NOTES AND LEGEND

STA 19+260 TO 19+450

DATUM

VERTICAL NAVD88

HORIZONTAL NAD83(92)

0 10 20

SCALE 1:250

Stantec

PROJECT NAME: DANVILLE

PROJECT NUMBER: F EGC 028-3(32)

FILE NAME: ...\plotfiles\EPSC EST-07.ptf | PLOT DATE: 1/18/2011

DESIGN SUPERVISOR: GARY SANTY | DRAWN BY: STANTEC

DESIGNED BY: STANTEC | CHECKED BY: STANTEC

EPSC STABILIZATION PLAN EST-7 | SHEET 135 OF 306

1/18/2011 11:52:43 PM v:\1953\active\19533033.0092\highway\plotfiles\EPSC EST-07.ptf

VTrans Metric

AREA NUMBER	651.15 - SEED 651.25 - HAY MULCH	651.15 - SEED 653.20 - TEMPORARY EROSION MATTING
	AREAS (SM)	AREAS (SM)
69	24.3	
70	1208.8	
71		290.8
72	97.4	
73	52.4	
74	4303.1	

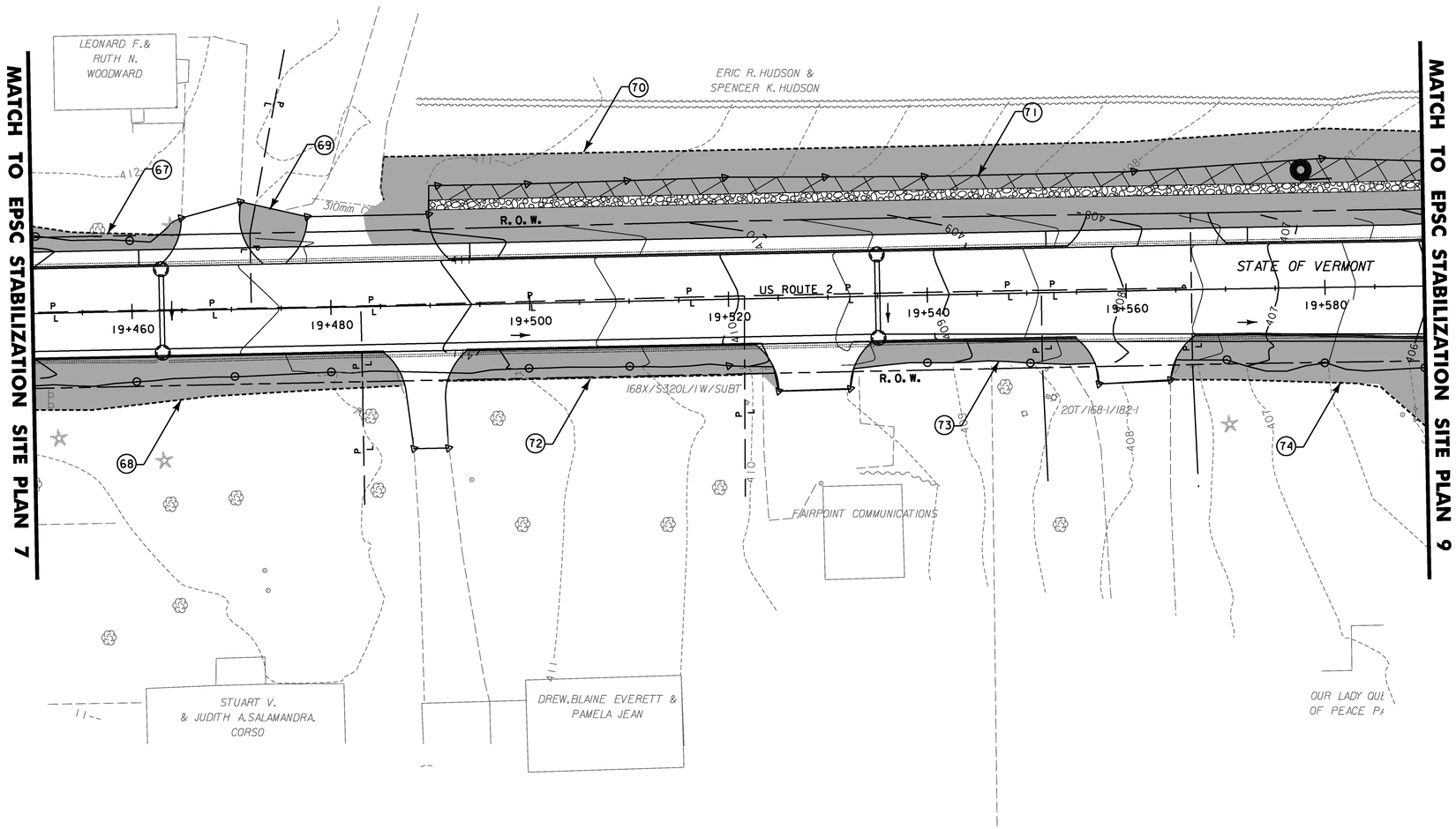

NOTE:

1. SEE EPSC STABILIZATION SITE PLAN EST-1 FOR GENERAL NOTES AND LEGEND

STA 19+450 TO 19+590

DATUM

VERTICAL NAVD88

HORIZONTAL NAD83(92)

0 10 20

SCALE 1:250

Stantec

PROJECT NAME: DANVILLE

PROJECT NUMBER: F EGC 028-3(32)

FILE NAME: ...\plotfiles\EPSC EST-08.ptf | PLOT DATE: 1/18/2011

DESIGN SUPERVISOR: GARY SANTY | DRAWN BY: STANTEC

DESIGNED BY: STANTEC | CHECKED BY: STANTEC

EPSC STABILIZATION PLAN EST-8 | SHEET 136 OF 306

1/8/2011 11:52:45 PM v:\1953\active\19530033.1092\highway\plotfiles\EPSC EST-08.ptf

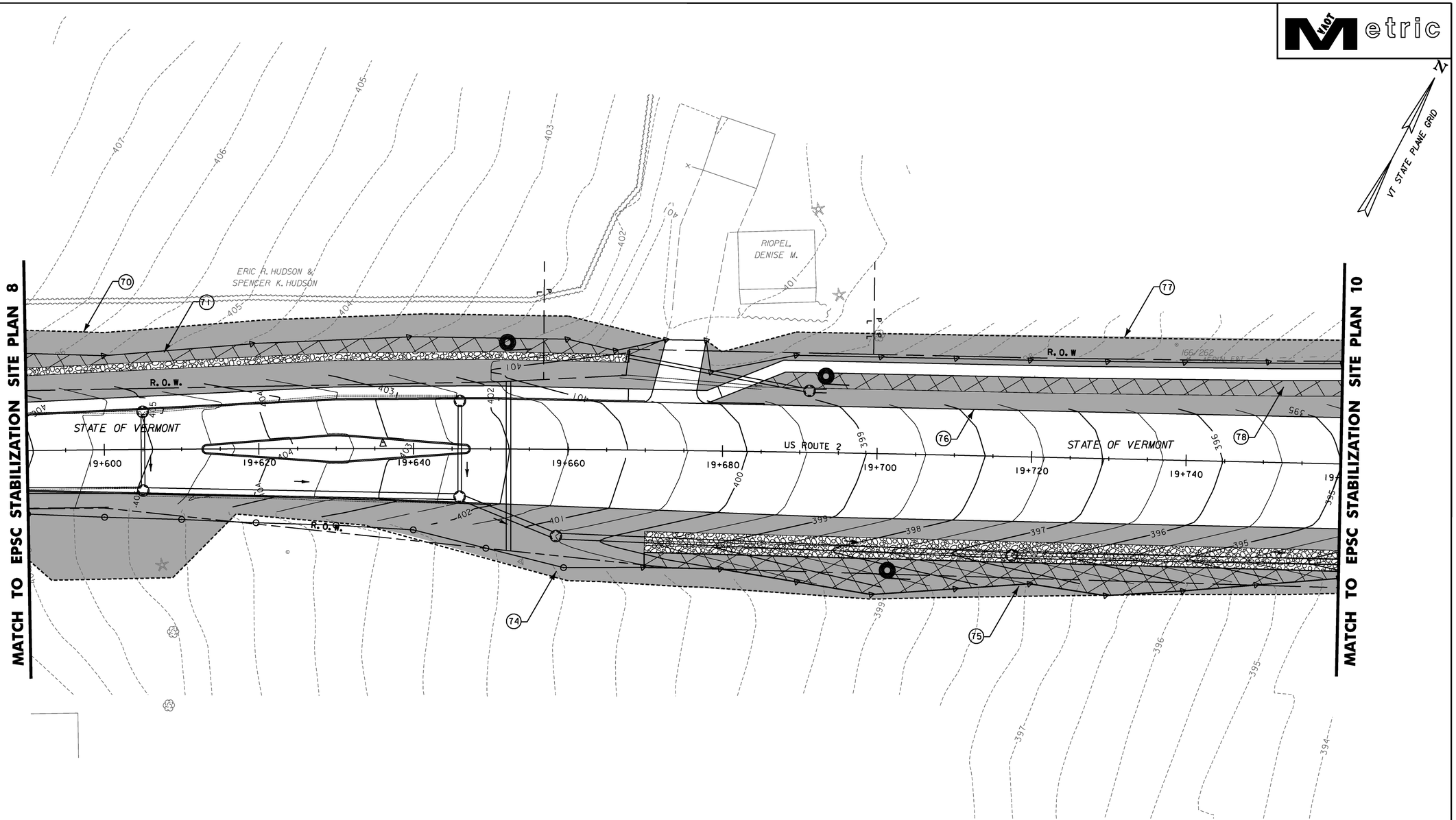

AREA NUMBER	651.15 - SEED 651.25 - HAY MULCH	651.15 - SEED 653.20 - TEMPORARY EROSION MATTING
	AREAS (SM)	AREAS (SM)
75		281.1
76	211.1	
77	348.1	
78		163.7

NOTE:

1. SEE EPSC STABILIZATION SITE PLAN EST-1 FOR GENERAL NOTES AND LEGEND

STA 19+590 TO 19+760

DATUM

VERTICAL NAVD88

HORIZONTAL NAD83(92)

0 10 20

SCALE 1:250

Stantec

PROJECT NAME: DANVILLE

PROJECT NUMBER: F EGC 028-3(32)

FILE NAME: ...\plotfiles\EPSC EST-09.ptf

DESIGN SUPERVISOR: GARY SANTY

DESIGNED BY: STANTEC

EPSC STABILIZATION PLAN EST-9

PLOT DATE: 1/18/2011

DRAWN BY: STANTEC

CHECKED BY: STANTEC

SHEET 137 OF 306

1/18/2011 1:52:46 PM v:\1953\active\195310033_10192\highway\plotfiles\EPSC EST-09.ptf

VT STATE PLANE GRID

MATCH TO EPSC STABILIZATION SITE PLAN 9

MATCH LINE THIS SHEET

DREW

DREW, EVERETT W. & NORMA S. TRUSTEES OF THE EVERETT W. DREW AND NORMA S. DREW REVOCABLE TRUST

STATE OF VERMONT

US ROUTE 2

R. O. W.

AERIAL E&T

310mm CGMP

SEE NOTE 2

SEE NOTE 3

TEMPORARY CONSTRUCTION LIMITS

UN-NAMED TRIBUTARY TO WATER ANDRIC

MATCH LINE THIS SHEET

STA 19+760 TO 19+980

NOTE:

1. SEE EPSC STABILIZATION SITE PLAN EST-1 FOR GENERAL NOTES AND LEGEND.
2. REMOVE TEMPORARY OUTLET CONTROL STRUCTURE AND REPLACE WITH PERMANENT OUTLET CONTROL STRUCTURE. SEE STORMWATER MANAGEMENT PLANS AND DETAILS.
3. CONSTRUCT EMERGENCY SPILLWAY PER STORMWATER MANAGEMENT PLANS AND DETAILS.

AREA NUMBER	651.15 - SEED 651.25 - HAY MULCH	651.15 - SEED 653.20 - TEMPORARY EROSION MATTING
	AREAS (SM)	AREAS (SM)
79	102.8	
80	89.7	
81		55.0
82	93.7	
83	120.5	
84		51.0
85	45.8	
86	2.4	
87		2301.2
88		285.6
89		1417.8

DATUM

VERTICAL NAVD88

HORIZONTAL NAD83(92)

0 10 20

SCALE 1:250

Stantec

PROJECT NAME: DANVILLE

PROJECT NUMBER: F EGC 028-3(32)

FILE NAME: ...\plotfiles\EPSC EST-10.ptf
DESIGN SUPERVISOR: GARY SANTY
DESIGNED BY: STANTEC
EPSC STABILIZATION PLAN EST-10

PLOT DATE: 1/18/2011
DRAWN BY: STANTEC
CHECKED BY: STANTEC
SHEET 138 OF 306

1/8/2011 1:52:48 PM v:\1953\active\195310033.1092\highway\plotfiles\EPSC EST-10.ptf

Metric

N

VT STATE PLANE GRID

MATCH TO EPSC STABILIZATION SITE PLAN 3

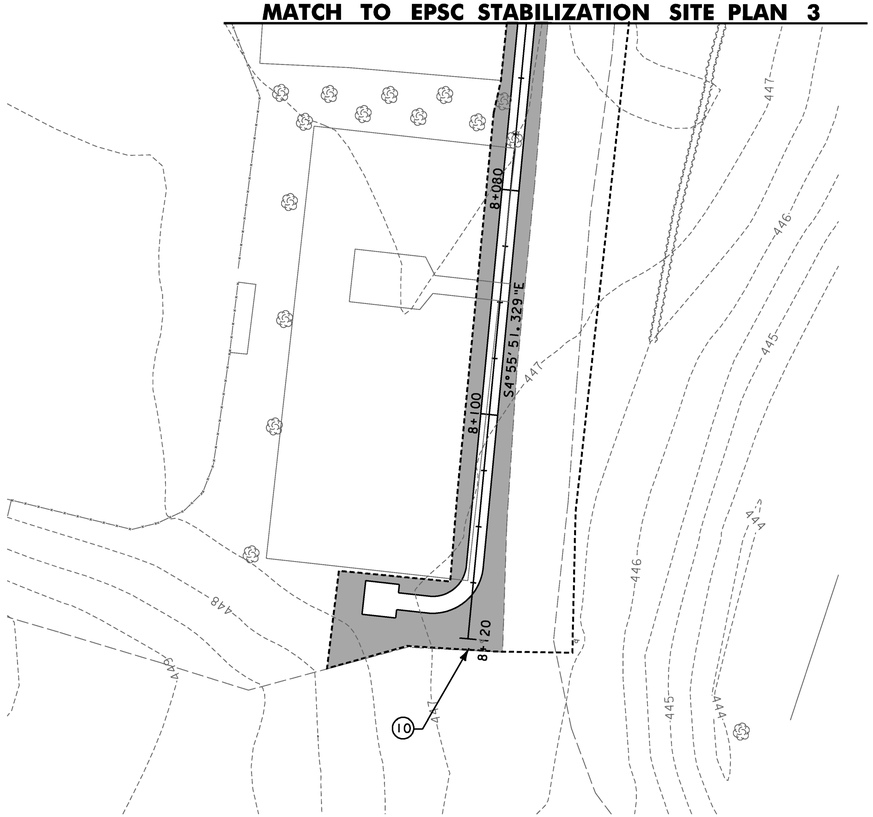

NOTE:

1. SEE EPSC STABILIZATION SITE PLAN EST-1 FOR GENERAL NOTES AND LEGEND

DATUM

VERTICAL NAVD88

HORIZONTAL NAD83(92)

0 10 20

SCALE 1:250

Stantec

PROJECT NAME: DANVILLE

PROJECT NUMBER: F EGC 028-3(32)

FILE NAME: ...\plotfiles\EPSC EST-11.ptf | PLOT DATE: 1/18/2011

DESIGN SUPERVISOR: GARY SANTY | DRAWN BY: STANTEC

DESIGNED BY: STANTEC | CHECKED BY: STANTEC

EPSC STABILIZATION PLAN EST-11 | SHEET 139 OF 306

1/18/2011 11:52:50 PM v:\9553\active\195300033.0192\highway\plotfiles\EPSC EST-11.ptf

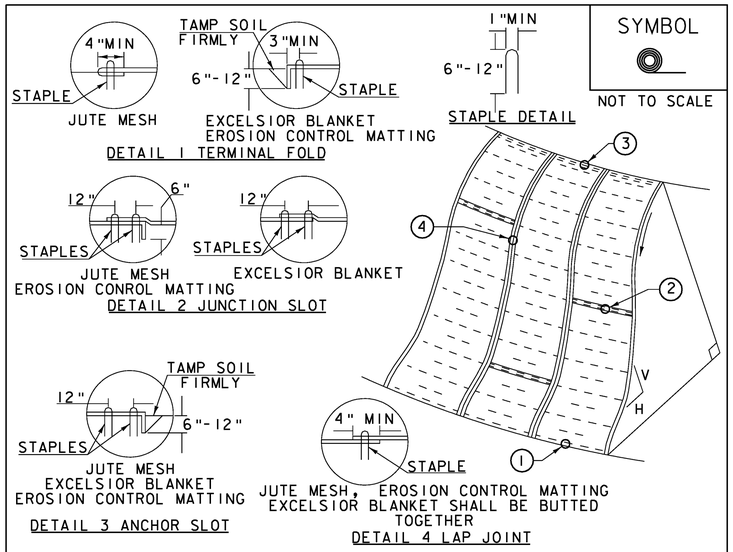

SYMBOL

NOT TO SCALE

CONSTRUCTION SPECIFICATIONS

1. APPLY TO SLOPES GREATER THAN 3H: IV OR WHERE NECESSARY TO AID IN ESTABLISHING VEGETATION.
2. APPLY FERTILIZER, LIME SEED PRIOR TO PLACING MATTING.
3. STAPLES ARE TO BE PLACED ALTERNATELY, IN COLUMNS APPROXIMATELY 2' APART AND IN ROWS APPROXIMATELY 3' APART. APPROXIMATELY 175 STAPLES ARE REQUIRED PER 4'X225' ROLL OF MATERIAL AND 125 STAPLES ARE REQUIRED PER 4'X150' ROLL OF MATERIAL.
4. DISTURBED AREAS SHALL BE SMOOTHLY GRADED. EROSION CONTROL MATERIAL SHALL BE PLACED LOOSELY OVER GROUND SURFACE. DO NOT STRETCH.
5. ALL TERMINAL ENDS AND TRANSVERSE LAPS SHALL BE STAPLED AT APPROXIMATELY 12" INTERVALS.

ADAPTED FROM DETAILS PROVIDED BY: NEW YORK STATE DEC
ORIGINALLY DEVELOPED BY USDA-NRCS
VERMONT DEPARTMENT OF ENVIRONMENTAL CONSERVATION

ROLLED EROSION CONTROL PRODUCT (RECP) SIDE SLOPE

NOTES:
REFER TO "THE VERMONT STANDARDS & SPECIFICATIONS FOR EROSION PREVENTION & SEDIMENT CONTROL -2006- " FROM THE VT AGENCY OF NATURAL RESOURCES FOR ADDITIONAL GUIDANCE.
THIS WORK SHALL BE PERFORMED IN ACCORDANCE WITH SECTION 653 AND AS SHOWN IN THE PLANS FOR TEMPORARY EROSION MATTING (PAY ITEM 653.20) ~~OR PERMANENT EROSION MATTING (PAY ITEM 653.21).~~

REVISIONS	
APRIL 16, 2007	JMF
JANUARY 13, 2009	WHF

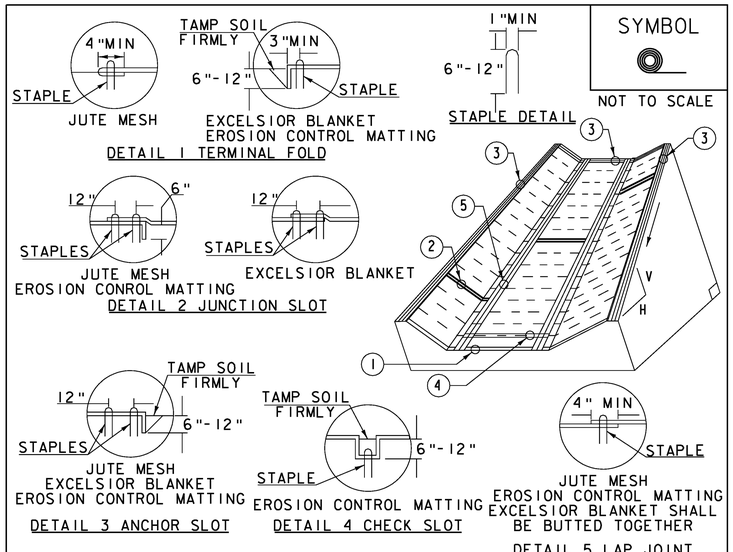

SYMBOL

NOT TO SCALE

CONSTRUCTION SPECIFICATIONS

1. EROSION MATTING, CHECK SLOTS, SHALL BE SPACED IN DITCH CHANNEL SO THAT ONE OCCURS WITHIN EACH 50' ON SLOPES OF MORE THAN 4% AND LESS THAN 6%. ON SLOPES OF 6% OR MORE, THEY SHALL BE SPACED SO THAT ONE OCCURS WITHIN EACH 25'.
2. APPLY FERTILIZER, LIME SEED PRIOR TO PLACING MATTING.
3. STAPLES ARE TO BE PLACED ALTERNATELY, IN COLUMNS APPROXIMATELY 2' APART AND IN ROWS APPROXIMATELY 3' APART. APPROXIMATELY 175 STAPLES ARE REQUIRED PER 4'X225' ROLL OF MATERIAL AND 125 STAPLES ARE REQUIRED PER 4'X150' ROLL OF MATERIAL.
4. DISTURBED AREAS SHALL BE SMOOTHLY GRADED. EROSION CONTROL MATERIAL SHALL BE PLACED LOOSELY OVER GROUND SURFACE. DO NOT STRETCH.
5. ALL TERMINAL ENDS AND TRANSVERSE LAPS SHALL BE STAPLED AT APPROXIMATELY 12" INTERVALS.

ADAPTED FROM DETAILS PROVIDED BY: NEW YORK STATE DEC
ORIGINALLY DEVELOPED BY USDA-NRCS
VERMONT DEPARTMENT OF ENVIRONMENTAL CONSERVATION

ROLLED EROSION CONTROL PRODUCT (RECP) DITCH

NOTES:
REFER TO "THE VERMONT STANDARDS & SPECIFICATIONS FOR EROSION PREVENTION & SEDIMENT CONTROL -2006- " FROM THE VT AGENCY OF NATURAL RESOURCES FOR ADDITIONAL GUIDANCE.
THIS WORK SHALL BE PERFORMED IN ACCORDANCE WITH SECTION 653 AND AS SHOWN IN THE PLANS FOR TEMPORARY EROSION MATTING (PAY ITEM 653.20) ~~OR PERMANENT EROSION MATTING (PAY ITEM 653.21).~~

REVISIONS	
MARCH 8, 2007	JMF
APRIL 16, 2007	WHF
JANUARY 13, 2009	WHF

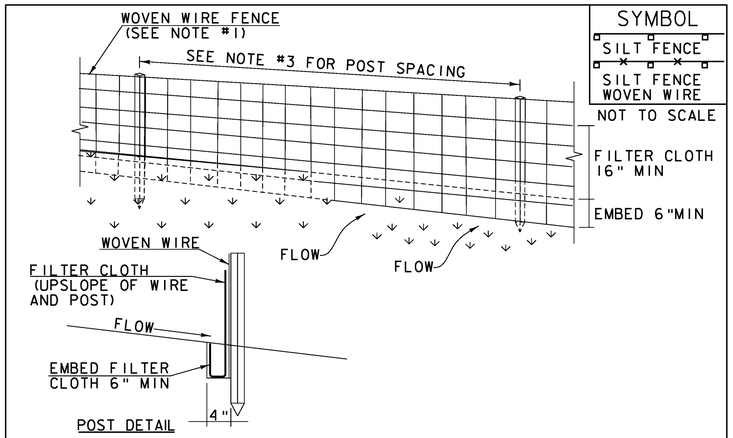

SYMBOL
SILT FENCE
SILT FENCE WOVEN WIRE

NOT TO SCALE

CONSTRUCTION SPECIFICATIONS

1. WOVEN WIRE REINFORCED FENCE IS REQUIRED WITHIN 100' UPSLOPE OF RECEIVING WATERS WHEN THE PROJECT FALLS UNDER A CONSTRUCTION STORMWATER PERMIT. WOVEN WIRE SHALL BE A MIN. 14 GAUGE WITH A 6" MAX. MESH OPENING.
2. FILTER CLOTH SHALL BE EITHER FILTER X, MIRAFI100X, STABILINKA T140N OR APPROVED EQUIVALENT.
3. POST SPACING FOR WIRE-BACKED FENCE SHALL BE 10' MAXIMUM. FOR FILTER-CLOTH FENCE, WHEN ELONGATION IS >50%, POST SPACING SHALL NOT EXCEED 4' AND WHEN ELONGATION IS <50%, POST SPACING SHALL NOT EXCEED 6'.
4. WOVEN WIRE FENCE IS TO BE FASTENED SECURELY TO FENCE POSTS WITH WIRE TIES. FILTER CLOTH IS TO BE FASTENED SECURELY TO WOVEN WIRE FENCE WITH TIES SPACED EVERY 24" AT TOP AND MID SECTION.
5. WHEN TWO SECTIONS OF FILTER CLOTH ADJOIN EACH OTHER THEY SHALL BE OVER-LAPPED BY 6" AND FOLDED.
6. PREFABRICATED UNITS SHALL BE GEOFAB, ENVIROFENCE, OR APPROVED EQUIVALENT.
7. MAINTENANCE SHALL BE PERFORMED AS NEEDED AND MATERIAL REMOVED WHEN SEDIMENT REACHES HALF OF FABRIC HEIGHT.

ADAPTED FROM DETAILS PROVIDED BY: NEW YORK STATE DEC
ORIGINALLY DEVELOPED BY USDA-NRCS
VERMONT DEPARTMENT OF ENVIRONMENTAL CONSERVATION

SILT FENCE

NOTES:
REFER TO "THE VERMONT STANDARDS & SPECIFICATIONS FOR EROSION PREVENTION & SEDIMENT CONTROL -2006- " FROM THE VT AGENCY OF NATURAL RESOURCES FOR ADDITIONAL GUIDANCE.
THIS WORK SHALL BE PERFORMED IN ACCORDANCE WITH SECTION 649 AND AS SHOWN IN THE PLANS FOR GEOTEXTILE FOR SILT FENCE (PAY ITEM 649.51) ~~OR GEOTEXTILE FOR SILT FENCE, WOVEN WIRE REINFORCED (PAY ITEM 649.515).~~

REVISIONS	
MARCH 21, 2008	WHF
DECEMBER 11, 2008	WHF
JANUARY 13, 2009	WHF

PROJECT NAME: DANVILLE
PROJECT NUMBER: F EGC 028-3(32)

FILE NAME: ...\plotfiles\EPSC DETAILS 01.ptf
DESIGN SUPERVISOR: VTRANS
DESIGNED BY: VTRANS
EPSC DETAILS SHEET EDS-1
PLOT DATE: 1/18/2011
DRAWN BY: VTRANS
CHECKED BY: VTRANS
SHEET 140 OF 306

1/18/2011 15:25:51 PM v:\1953\active\19530033_i092\highway\plotfiles\EPSC DETAILS 01.ptf

SYMBOL

NOT TO SCALE

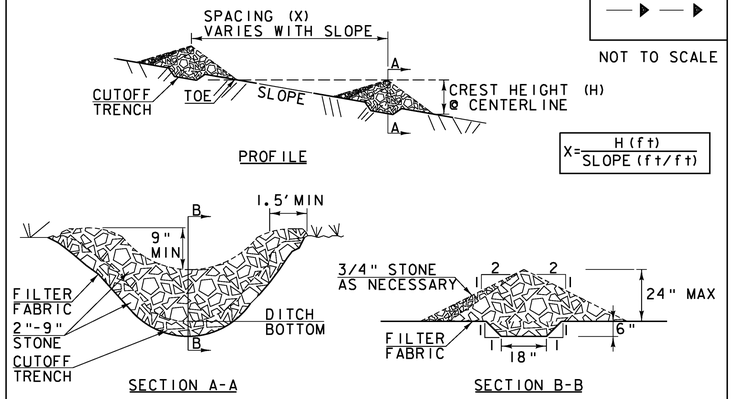

CONSTRUCTION SPECIFICATIONS

1. STONE WILL BE PLACED ON A FILTER FABRIC FOUNDATION.
2. CHECK DAMS SHALL BE SPACED SO THAT THE ELEVATION OF THE CREST OFTHE DOWNSTREAM DAM IS AT THE SAME ELEVATION AS THE TOE OF THE UPSTREAM DAM.
3. 3/4" FILTERING STONE MAY BE ADDED TO THE FACE OF THE CHECK DAM AS NECESSARY.
4. EXTEND THE STONE A MINIMUM OF 1.5 FEET BEYOND THE DITCH BANKS TO PREVENT CUTTING AROUND THE DAM.
5. PROTECT CHANNEL DOWNSTREAM OF THE LOWEST CHECK DAM FROM SCOUR AND EROSION WITH STONE OR LINER AS APPROPRIATE.
6. ENSURE THAT CHANNEL APPURTENANCES SUCH AS CULVERT ENTRANCES BELOW CHECK DAMS ARE NOT SUBJECT TO DAMAGE OR BLOCKAGE FROM DISPLACED STONE.
7. MAXIMUM DRAINAGE AREA 2 ACRES.

ADAPTED FROM DETAILS PROVIDED BY: NEW YORK STATE DEC ORIGINALLY DEVELOPED BY USDA-NRCS VERMONT DEPARTMENT OF ENVIRONMENTAL CONSERVATION

CHECK DAM

NOTES:
REFER TO "THE VERMONT STANDARDS & SPECIFICATIONS FOR EROSION PREVENTION & SEDIMENT CONTROL -2006- " FROM THE VT AGENCY OF NATURAL RESOURCES FOR ADDITIONAL GUIDANCE.

THIS WORK SHALL BE PERFORMED IN ACCORDANCE WITH SECTION 653 FOR TEMPORARY STONE CHECK DAM, TYPE I (PAY ITEM 653.25)

REVISIONS	
MARCH 21, 2008	WHF
JANUARY 8, 2009	WHF

SYMBOL

NOT TO SCALE

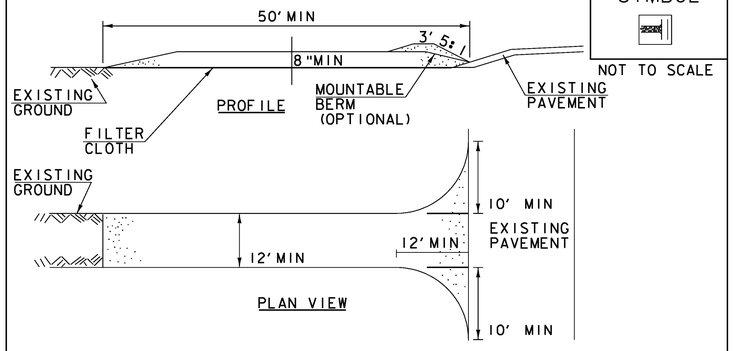

CONSTRUCTION SPECIFICATIONS

1. STONE SIZE- USE 1-4" STONE, RECLAIMED OR RECYCLED CONCRETE EQUIVALENT.
2. LENGTH- NOT LESS THAN 50' (EXCEPT ON A SINGLE RESIDENCE LOT WHERE A 30' MINIMUM LENGTH APPLIES).
3. THICKNESS- NOT LESS THAN 8".
4. WIDTH- 12' MINIMUM, BUT NOT LESS THAN THE FULL WIDTH AT POINTS WHERE INGRESS OR EGRESS OCCURS. 24' IF SINGLE ENTRANCE TO SITE.
5. GEOTEXTILE MUST BE PLACED OVER THE ENTIRE AREA PRIOR TO PLACING STONE.
6. SURFACE WATER- ALL SURFACE WATER FLOWING OR DIVERTED TOWARD CONSTRUCTION ENTRANCES SHALL BE PIPED BENEATH THE ENTRANCE. IF PIPING IS IMPRACTICAL, A MOUNTABLE BERM WITH 5:1 SLOPES WILL BE PERMITTED.
7. MAINTENANCE- THE ENTRANCE SHALL BE MAINTAINED IN A CONDITION WHICH WILL PREVENT TRACKING OR FLOWING OF SEDIMENT ONTO PUBLIC RIGHTS-OF-WAY, ALL SEDIMENT SPILLED, DROPPED, WASHED OR TRACKED ONTO PUBLIC RIGHTS-OF-WAY MUST BE REMOVED IMMEDIATELY.
8. WHEN WASHING IS REQUIRED, IT SHALL BE DONE ON AN AREA STABILIZED WITH STONE AND WHICH DRAINS INTO AN APPROVED SEDIMENT TRAPPING DEVICE.
9. PERIODIC INSPECTION AND NEEDED MAINTENANCE SHALL BE PROVIDED ACCORDING TO PERMIT REQUIREMENTS.

ADAPTED FROM DETAILS PROVIDED BY: NEW YORK STATE DEC ORIGINALLY DEVELOPED BY USDA-NRCS VERMONT DEPARTMENT OF ENVIRONMENTAL CONSERVATION

STABILIZED CONSTRUCTION ENTRANCE

NOTES:
REFER TO "THE VERMONT STANDARDS & SPECIFICATIONS FOR EROSION PREVENTION & SEDIMENT CONTROL -2006- " FROM THE VT AGENCY OF NATURAL RESOURCES FOR ADDITIONAL GUIDANCE.

THIS WORK SHALL BE PERFORMED IN ACCORDANCE WITH SECTION 653 FOR VEHICLE TRACKING PAD (PAY ITEM 653.35) OR AS SPECIFIED IN THE CONTRACT.

REVISIONS	
MARCH 24, 2008	WHF
JANUARY 13, 2009	WHF

SYMBOL

NOT TO SCALE

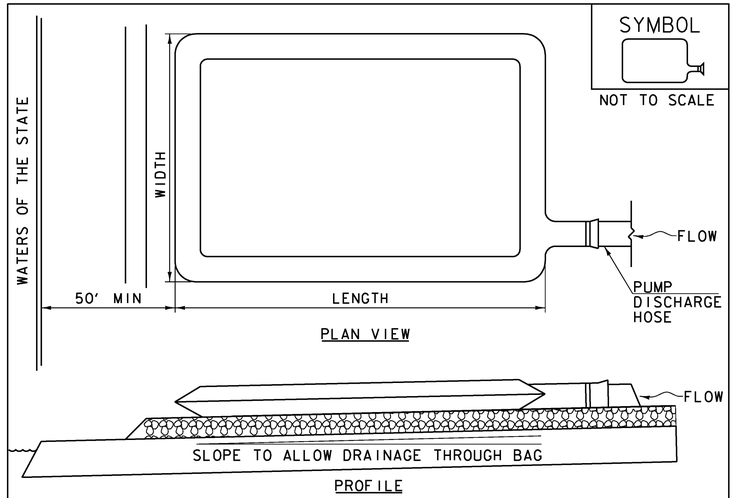

CONSTRUCTION SPECIFICATIONS

1. THE PRIMARY PURPOSE OF FILTER BAG IS TO RETAIN SILT, SAND, AND FINES DURING DEWATERING OPERATIONS.
2. FILTER BAGS SHALL BE INSTALLED ON A VEGETATED SLOPE GRADED TO ALLOW INCOMING WATER TO FLOW THROUGH THE BAG.
3. FILTER BAGS MAY ALSO BE PLACED ON COARSE AGGREGATE, STONE, OR HAYBALES TO INCREASE FILTRATION EFFICIENCY.
4. FILTER BAGS SHALL BE LOCATED A MINIMUM OF 50' FROM WATERS OF THE STATE UNLESS OTHERWISE APPROVED BY THE ENGINEER.
5. THE NECK OF THE FILTER BAG SHALL BE STRAPPED TIGHTLY TO THE DISCHARGE HOSE.
6. A FILTER BAG IS FULL WHEN IT NO LONGER CAN EFFICIENTLY FILTER SEDIMENT OR ALLOW WATER TO PASS AT A REASONABLE RATE.
7. FILTER BAG SHALL BE DISPOSED OF AS APPROVED IN THE EPSC PLAN OR AS DIRECTED BY THE ENGINEER.

FILTER BAG

NOTES:
REFER TO "THE VERMONT STANDARDS & SPECIFICATIONS FOR EROSION PREVENTION & SEDIMENT CONTROL -2006- " FROM THE VT AGENCY OF NATURAL RESOURCES FOR ADDITIONAL GUIDANCE.

THIS WORK SHALL BE PERFORMED IN ACCORDANCE WITH SECTION 653 FOR FILTER BAG (PAY ITEM 653.45) AND AS SPECIFIED IN THE CONTRACT.

REVISIONS	
MARCH 24, 2008	WHF
JANUARY 13, 2009	WHF

PROJECT NAME: DANVILLE
PROJECT NUMBER: F EGC 028-3(32)

FILE NAME: ...\plotfiles\EPSC DETAILS 02.ptf	PLOT DATE: 1/18/2011
DESIGN SUPERVISOR: VTRANS	DRAWN BY: VTRANS
DESIGNED BY: VTRANS	CHECKED BY: VTRANS
EPSC DETAILS SHEET EDS-2	SHEET 141 OF 306

1/18/2011 1:52:53 PM v:\1953\active\19530033.1092\highway\plotfiles\EPSC DETAILS 02.ptf

VAOT RURAL AREA MIX					
	LBS/AC				
% WEIGHT	BROADCAST	HYDROSEED	NAME	GERM %	PURITY %
37.5%	22.5	45	CREEPING RED FESCUE	85%	98%
37.5%	22.5	45	TALL FESCUE	90%	95%
5.0%	3	6	RED TOP	90%	95%
15.0%	9	18	BIRDSFOOT TREFOIL	85%	98%
5.0%	3	6	ANNUAL RYE GRASS	85%	95%
100%	60	120			

VAOT URBAN AREA MIX					
	LBS/AC				
% WEIGHT	BROADCAST	HYDROSEED	NAME	GERM %	PURITY %
42.5%	34	68	CREEPING RED FESCUE	85%	98%
10.0%	8	16	PERENNIAL RYE GRASS	90%	95%
42.5%	34	68	KENTUCKY BLUE GRASS	85%	85%
5.0%	4	8	ANNUAL RYE GRASS	85%	95%
100%	80	160			

GENERAL GUIDANCE			
FERTILIZER		LIME	
BROADCAST	HYDROSEED	BROADCAST	HYDROSEED
10-20-10	19-19-19	PELLETIZED	LIQUID
500 LBS/AC		2 TONS/AC	4.4 GAL/AC

CONSTRUCTION GUIDANCE

1. RURAL SEED MIX: USE AS INDICATED IN THE PLANS AND/OR FOR ALL ESTABLISHED UPLAND (NON WETLAND) AREAS DISTURBED BY THE CONTRACTOR.
2. URBAN SEED MIX: USE AS INDICATED IN THE PLANS AND/OR FOR ALL ESTABLISHED LAWN AREAS DISTURBED BY THE CONTRACTOR.
3. ALL SEED MIXTURES: SHALL NOT HAVE A WEED CONTENT EXCEEDING 0.40% BY WEIGHT AND SHALL BE FREE OF ALL NOXIOUS SEED.
4. FERTILIZER AND LIMESTONE: SHALL FOLLOW RATES SHOWN ON PLAN OR AS DIRECTED BY THE ENGINEER
5. HAY MULCH: TO BE PLACED ON EARTH SLOPES AT THE RATE OF 2 TONS/ACRE, ACHIEVE 90% GROUND COVER OR AS DIRECTED BY THE ENGINEER.
6. TOPSOIL: TO BE USED WITH SEED AS INDICATED ON THE PLANS, OR AS DIRECTED BY THE ENGINEER.
7. HYDROSEEDING: ALTHOUGH GUIDANCE IS GIVEN ABOVE THE SITE CONDITIONS AND THE TYPE OF HYDROSEED WILL ULTIMATELY DICTATE THE AMOUNTS AND TYPES OF SOIL AMENDMENTS TO BE APPLIED
8. TURF ESTABLISHMENT: PLACING SEED, FERTILIZER, LIME AND MULCH PRIOR TO SEPTEMBER 15 AND AFTER APRIL 15 CAN BETTER ENSURE A VIGOROUS GROWTH OF GRASS.

ADAPTED FROM VTRANS TECHNICAL LANSCAPE MAUAL FOR ROADWAYS AND TRANSPORTATION FACILITIES

TURF ESTABLISHMENT

REVISIONS	
JUNE 23, 2009	WHF
JANUARY 15, 2010	WHF

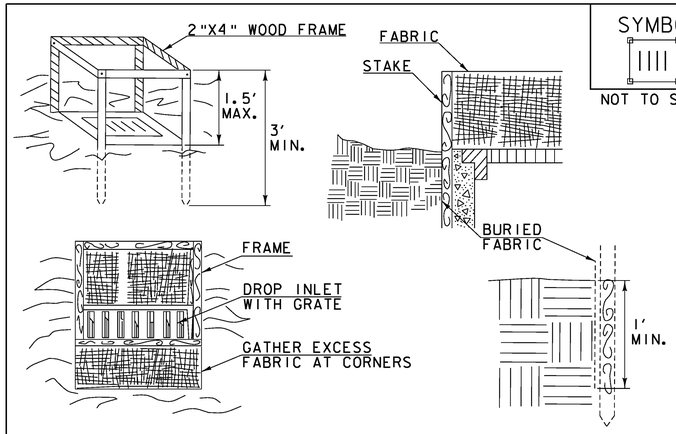

SYMBOL

NOT TO SCALE

CONSTRUCTION SPECIFICATIONS

1. FILTER FABRIC SHALL HAVE AN APPARENT OPENING SIZE OF 40-85. BURLAP MAY BE USED FOR SHORT TERM APPLICATIONS.
2. CUT FABRIC FROM A CONTINUOUS ROLL TO ELIMINATE JOINTS. IF JOINTS ARE NEEDED THEY WILL BE OVERLAPPED TO THE NEXT STAKE.
3. STAKE MATERIALS WILL BE STANDARD 2"x 4" WOOD OR EQUIVALENT METAL WITH A MINIMUM LENGTH OF 3'.
4. SPACE STAKES EVENLY AROUND INLET 3' APART AND DRIVE A MINIMUM 18" DEEP. SPANS GREATER THAN 3' MAY BE BRIDGED WITH THE USE OF WIRE MESH BEHIND THE FILTER FABRIC FOR SUPPORT.
5. FABRIC SHALL BE EMBEDDED 1' MINIMUM BELOW GROUND AND BACKFILLED. IT SHALL BE SECURELY FASTENED TO THE STAKES AND FRAME.
6. A 2" x 4" WOOD FRAME SHALL BE COMPLETED AROUND THE CREST OF THE FABRIC FOR OVER FLOW STABILITY.
7. MAXIMUM DRAINAGE AREA 1ACRE

ADAPTED FROM DETAILS PROVIDED BY: NEW YORK STATE DECORIGINALLY DEVELOPED BY USDA-NRCSVERMONT DEPARTMENT OF ENVIRONMENTAL CONSERVATION

FILTER FABRIC DROP INLET PROTECTION

NOTES:
REFER TO "THE VERMONT STANDARDS & SPECIFICATIONS FOR EROSION PREVENTION & SEDIMENT CONTROL -2006- " FROM THE VT AGENCY OF NATURAL RESOURCES FOR ADDITIONAL GUIDANCE.

THIS WORK SHALL BE PERFORMED IN ACCORDANCE WITH SECTION 653 FOR INLET PROTECTION DEVICE, TYPE I (PAY ITEM 653.40).

REVISIONS	
MARCH 7, 2008	WHF
JANUARY 13, 2009	WHF

PROJECT NAME: DANVILLE
PROJECT NUMBER: F EGC 028-3(32)

FILE NAME: ...\plotfiles\EPSC DETAILS 03.ptf
DESIGN SUPERVISOR: VTRANS
DESIGNED BY: VTRANS
EPSC DETAILS SHEET EDS-3
PLOT DATE: 1/18/2011
DRAWN BY: VTRANS
CHECKED BY: VTRANS
SHEET 142 OF 306

1/18/2011 15:52:54 PM v:\953\active\953A0033.0092\highway\plotfiles\EPSC DETAILS 03.ptf

SYMBOL

NOT TO SCALE

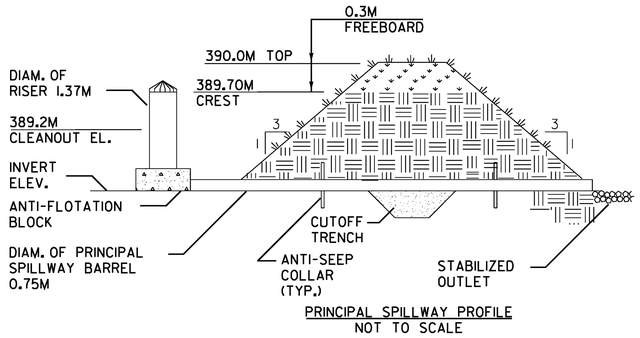

PRINCIPAL SPILLWAY PROFILE
NOT TO SCALE

MAXIMUM DRAINAGE AREA = 100 ACRES

CONSTRUCTION SPECIFICATIONS

1. SEE STORMWATER MANAGEMENT PLANS FOR DIMENSIONS, ELEVATIONS, DETAILS AND OTHER INFORMATION NOT SHOWN ON THIS SHEET.
2. MAXIMUM SEDIMENT LEVEL IS 389.2 METERS. BASIN SHALL BE DEWATERED AND SEDIMENT REMOVED AT OR BEFORE MAXIMUM ELEVATION TO RESTORE BASIN TO FULL STORAGE CAPACITY.

SEDIMENT BASIN DETAILS

NOTES:
REFER TO "THE VERMONT STANDARDS & SPECIFICATIONS FOR EROSION PREVENTION & SEDIMENT CONTROL -2006- " FROM THE VT AGENCY OF NATURAL RESOURCES FOR ADDITIONAL GUIDANCE.

SYMBOL

NOT TO SCALE

OPTIONAL SEDIMENT BASIN DEWATERING DEVICE - I WITH 6" PERFORATED RISER

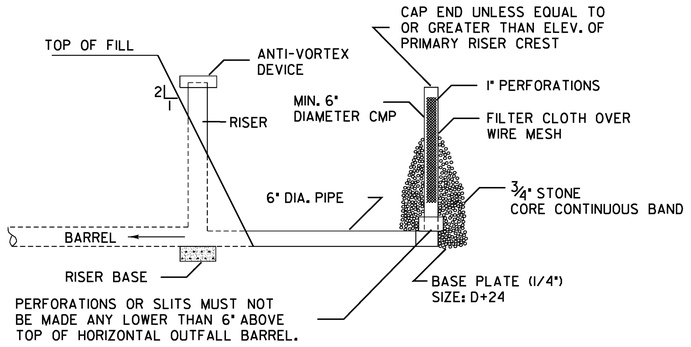

PERFORATIONS - 6" SPACING HORIZONTAL & VERTICAL LOCATED IN CONCAVE.

OPTIONAL SEDIMENT BASIN DEWATERING DEVICE - II

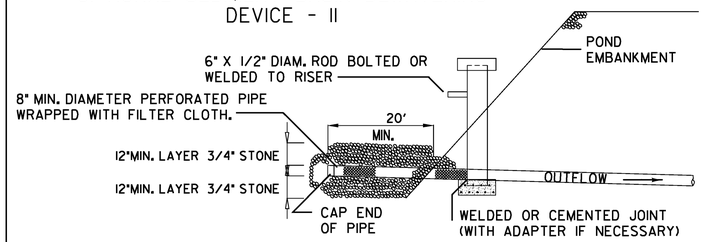

OPTIONAL SEDIMENT BASIN DEWATERING DEVICES

NOTES:
REFER TO "THE VERMONT STANDARDS & SPECIFICATIONS FOR EROSION PREVENTION & SEDIMENT CONTROL -2006- " FROM THE VT AGENCY OF NATURAL RESOURCES FOR ADDITIONAL GUIDANCE.

SYMBOL

NOT TO SCALE

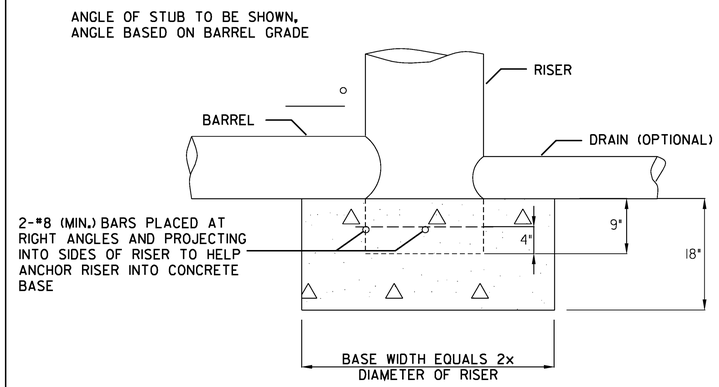

CONSTRUCTION SPECIFICATIONS

NOTES:

1. THE CONCRETE BASE SHALL BE POURED IN SUCH A MANNER TO INSURE THAT THE CONCRETE FILLS THE BOTTOM OF THE RISER TO THE INVERT OF THE OUTLET PIPE TO PREVENT THE RISER FROM BREAKING AWAY FROM THE BASE.
2. WITH ALUMINUM OR ALUMINIZED PIPE, THE EMBEDDED SECTION MUST BE PAINTED WITH CHROMATE OR EQUIVALENT.
3. RISER BASE MAY BE SIZED AS COMPUTED USING FLOATATION WITH A FACTOR OF SAFETY OF 1.2.

RISER BASE DETAIL
SEDIMENT BASIN

NOTES:
REFER TO "THE VERMONT STANDARDS & SPECIFICATIONS FOR EROSION PREVENTION & SEDIMENT CONTROL -2006- " FROM THE VT AGENCY OF NATURAL RESOURCES FOR ADDITIONAL GUIDANCE.

NOTE:
THIS WORK SHALL BE PERFORMED IN ACCORDANCE WITH SECTION 900 FOR PAY ITEM 900.620 SPECIAL PROVISION (TEMPORARY SEDIMENT BASIN).

PROJECT NAME: DANVILLE
PROJECT NUMBER: F EGC 028-3(32)

FILE NAME: ...\plotfiles\EPSC DETAILS 04.ptf	PLOT DATE: 1/18/2011
DESIGN SUPERVISOR: VTRANS	DRAWN BY: VTRANS
DESIGNED BY: VTRANS	CHECKED BY: VTRANS
EPSC DETAILS SHEET EDS-4	SHEET 143 OF 306

1/18/2011 15:26:56 PM v:\0953\active\09530033..0092\highway\plotfiles\EPSC DETAILS 04.ptf

Metric

SYMBOL



NOT TO SCALE

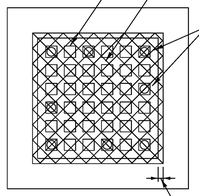

DETAIL SHOWN FOR FLAT INLET GRATES ONLY. REFER TO MANUFACTURER'S RECOMMENDATIONS FOR INSTALLATIONS ON CURB OR ROUND INLETS.

CONSTRUCTION SPECIFICATIONS

1. FILTERS SHALL RETAIN ALL CONSTRUCTION DEBRIS AND SHALL RETAIN OR OTHERWISE CONTROL MOST OF THE SEDIMENT PRODUCED BY CONSTRUCTION OPERATIONS.
2. IF CLOGGING OCCURS, INLETS SHALL BE ABLE TO BE EASILY UNCLOGGED BY BROOMING THE SIDES AND TOP OF THE FILTER.
3. INSTALLED FILTERS SHALL BE RESISTANT TO TRAFFIC DAMAGE, INCLUDING TRAFFIC BY STREET CLEANING MACHINES.
4. FILTER UNITS SHALL BE BIODEGRADABLE AND MAY OFTEN BE RE-USED.
5. INSTALL FILTER UNIT IN ACCORDANCE WITH MANUFACTURER'S RECOMMENDATIONS.
6. MINIMUM NUMBER OF ANCHORS PER FILTER UNIT: 7 FOR CURB INLETS, 8 FOR FLAT GRATES.
7. INSPECT ALL INSTALLED FILTER UNITS AFTER EVERY RAIN.
8. INSPECT ALL INSTALLED FILTER UNITS PRIOR TO INITIATING CONSTRUCTION ACTIVITIES FOR THE DAY IF RAIN PERSISTS OVERNIGHT.
9. IF, UPON VISUAL INSPECTION, 50% OR MORE OF FILTER FABRIC SURFACE AREA IS INUNDATED WITH SEDIMENT OR FILTER FABRIC IS CLOGGED, CONTRACTOR SHALL BROOM COLLECTED MATERIAL OFF FILTER UNIT SURFACES AND AWAY FROM EDGES.
10. REMOVE SEDIMENT AND DEBRIS COLLECTED AROUND FILTER UNITS. DISPOSE OF COLLECTED SEDIMENT AND DEBRIS AT AN APPROVED SITE WHERE IT WILL NOT BE SUBJECT TO EROSION.

INLET PROTECTION DEVICE, FILTER FIBER

NOTES:
THIS WORK SHALL BE PERFORMED IN ACCORDANCE WITH SECTION 653 FOR PAY ITEM 653.41 INLET PROTECTION DEVICE, TYPE II.

Stantec

PROJECT NAME: DANVILLE	
PROJECT NUMBER: F EGC 028-3(32)	
FILE NAME: ...\plotfiles\EPSC DETAILS 05.ptf	PLOT DATE: 1/18/2011
DESIGN SUPERVISOR: GARY SANTY	DRAWN BY: STANTEC
DESIGNED BY: STANTEC	CHECKED BY: STANTEC
EPSC DETAILS SHEET EDS-5	SHEET 144 OF 306

1/18/2011 1:52:57 PM v:\1953\active\195310033_10192\highway\plotfiles\EPSC DETAILS 05.ptf

646.406 DURABLE 100 MM WHITE LINE, RECESSED POLYUREA
646.600 TEMPORARY 100 MM WHITE LINE
STA. 18+507.7 TO 18+600.0, LT.
STA. 18+507.7 TO 18+600.0, RT.

646.81 PAINTED CURB
STA. 18+569.8 TO 18+590.2, ISLAND

646.456 DURABLE 200 MM YELLOW LINE, RECESSED POLYUREA
646.650 TEMPORARY 200 MM YELLOW LINE
STA. 18+520.0 TO 18+570.0 (DIAGONALS)
STA. 18+590.0 TO 18+600.0 (DIAGONALS)

646.494 DURABLE LETTER OR SYMBOL, POLYUREA
STA. 18+509.0, RT - "SCHOOL"

675.50 REMOVING SIGNS
AS SHOWN - 10

675.60 ERECTING SALVAGED SIGNS
AS SHOWN - 3

646.416 DURABLE 100 MM YELLOW LINE, RECESSED POLYUREA
646.610 TEMPORARY 100 MM YELLOW LINE
STA. 18+507.7 TO 18+520.0, ℄ (DOUBLE)
STA. 18+520.0 TO 18+570.0, LT (DOUBLE)
STA. 18+520.0 TO 18+570.0, RT (DOUBLE)
STA. 18+590.0 TO 18+600.0, LT (DOUBLE)
STA. 18+590.0 TO 18+600.0, RT (DOUBLE)
STA. 18+570.0 TO 18+590.0, LT (SINGLE)
STA. 18+570.0 TO 18+590.0, RT (SINGLE)

VTrans Metric

N
VT STATE PLANE GRID

STA. 18+589.7, RT.

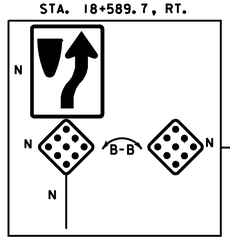

STA. 18+570.3, RT.

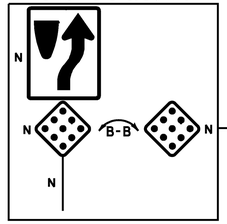

STA. 18+454.9, LT.

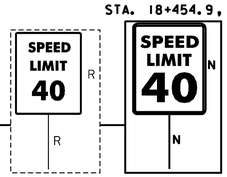

STA. 18+462.8, RT.

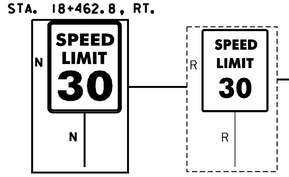

STA. 18+494.5, RT.

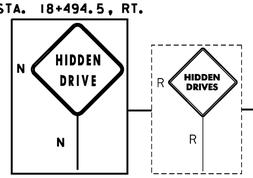

STA. 18+502.5, RT.

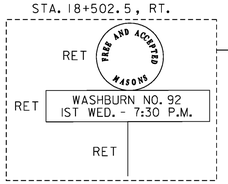

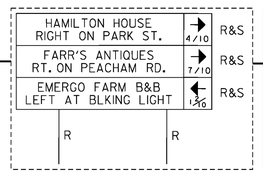

STA. 18+526.5, RT.

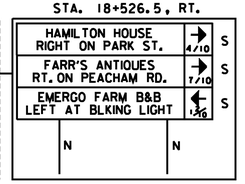

TEMPORARY & DURABLE LETTER OR SYMBOL

STA. 18+509.1, RT.

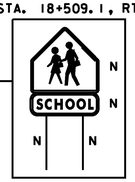

STA. 18+595.1, RT.

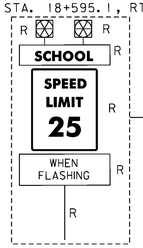

SEE NOTE 2

NOTES:
1. MATCH EXISTING STRIPING CONFIGURATION.
2. REMOVE EXISTING FLASHING BEACON SHALL BE PAID INCIDENTAL TO ALL OTHER SIGN ITEMS.

SIGN LEGEND

N	=	NEW
R	=	REMOVE
R&S	=	REMOVE & SALVAGE
S	=	SALVAGE SIGN
RET	=	RETAIN
B-B	=	BACK TO BACK
----	=	EXISTING
———	=	PROPOSED

0 10 20
SCALE 1:250

Stantec

PROJECT NAME: DANVILLE
PROJECT NUMBER: F EGC 028-3(32)

FILE NAME: ...\Highway\PlotFiles\101ps01.ptf
DESIGN SUPERVISOR: GARY SANTY
DESIGNED BY: STANTEC
SIGNING & PAVEMENT PLAN SHEET SP-1

PLOT DATE: 1/18/2011
DRAWN BY: STANTEC
CHECKED BY: STANTEC
SHEET 145 OF 306

1/18/2011 11:53:00 PM v:\1853\active\185300033.0192\Highway\PlotFiles\101ps01.ptf

646.406 DURABLE 100 MM WHITE LINE, RECESSED POLYUREA
646.600 TEMPORARY 100 MM WHITE LINE
STA. 18+600.0 TO 18+770.0, LT
STA. 18+600.0 TO 18+770.0, RT

646.416 DURABLE 100 MM YELLOW LINE, RECESSED POLYUREA
646.610 TEMPORARY 100 MM YELLOW LINE
STA. 18+600.0 TO 18+610.0, LT (DOUBLE)
STA. 18+600.0 TO 18+610.0, RT (DOUBLE)
STA. 18+610.0 TO 18+770.0, ℄ (DOUBLE)

678.16 FLASHING BEACON, GROUND MOUNTED
STA. 18+620.4, RT

646.456 DURABLE 200 MM YELLOW LINE, RECESSED POLYUREA
646.650 TEMPORARY 200 MM YELLOW LINE
STA. 18+600.0 TO 18+610.0 (DIAGONALS)

675.50 REMOVING SIGNS
AS SHOWN - 8

675.60 ERECTING SALVAGED SIGNS
AS SHOWN - 1

VTrans Metric

N
VT STATE PLANE GRID

STA. 18+768.9, LT.
NORTHERN EQUINE
VETERINARY SERVICE
DR. STEVEN B. LEVINE
684-9977
S
R&S

STA. 18+680.4, LT.
R
SPEED LIMIT 30
R

STA. 18+741.4, LT.
N
N
R
XING
R

STA. 18+620.4, LT.
N
SPEED LIMIT 30
N
END SCHOOL SPEED LIMIT
N N

STA. 18+738.5, LT.
N
0020
0303
0420
N
R
0020
0303
0420
R

MATCH LINE – STA. 18+600 SEE SHEET SP-1

100 mm YELLOW LINE DOUBLE
200 mm YELLOW LINE
100 mm WHITE LINE

1.2m
3.3m
3.3m
1.2m
+610.0

US ROUTE 2
18+620 18+640 18+660 18+680 18+700 18+720 18+740 18+760

MATCH LINE – STA. 18+770 SEE SHEET SP-3

100 mm YELLOW LINES

STA. 18+620.4, RT.
N N
SCHOOL
SPEED LIMIT 25
WHEN FLASHING
N
N N

STA. 18+703.8, RT.
R

STA. 18+758.1, RT.
R
R
BEGIN
R

STA. 18+724.4, RT.
0020
0303
0420
N
N
0020
0303
0420
R
R

NOTE:
SEE SHEET SP-1 FOR LEGEND.

0 10 20
SCALE 1:250

Stantec

PROJECT NAME:	DANVILLE
PROJECT NUMBER:	F EGC 028-3(32)
FILE NAME: ...\Highway\PlotFiles\102 ps02.ptf	PLOT DATE: 1/18/2011
DESIGN SUPERVISOR: GARY SANTY	DRAWN BY: STANTEC
DESIGNED BY: STANTEC	CHECKED BY: STANTEC
SIGNING & PAVEMENT PLAN SHEET SP-2	SHEET 146 OF 306

1/18/2011 1:53:01 PM v:\1953\active\195310033_1092\Highway\PlotFiles\02 ps02.ptf

646.406 DURABLE 100 MM WHITE LINE, RECESSED POLYUREA
646.600 TEMPORARY 100 MM WHITE LINE

STA. 18+770.0 TO 18+902.6, LT
STA. 18+911.2 TO 18+925.8, LT
STA. 18+928.2 TO 18+930.0, LT
STA. 18+770.0 TO 18+925.8, RT
STA. 18+928.2 TO 18+930.0, RT

646.81 PAINTED CURB

STA. 18+919.5 TO 18+925.8 (AROUND ISLAND)
STA. 18+928.2 TO 18+930.0 (AROUND ISLAND)

646.700 TEMPORARY CROSSWALK MARKING
646.507 DURABLE CROSSWALK MARKING, RECESSED TYPE I TAPE

STA. 18+927.0
(FOR DETAIL SEE SHEET SGD-1)

646.456 DURABLE 200 MM YELLOW LINE, RECESSED POLYUREA
646.650 TEMPORARY 200 MM YELLOW LINE

STA. 18+911.8 TO 18+920.0 (DIAGONALS)

646.416 DURABLE 100 MM YELLOW LINE, RECESSED POLYUREA
646.610 TEMPORARY 100 MM YELLOW LINE

STA. 18+770.0 TO 18+900.0, ℄ (DOUBLE)
STA. 01+020.0 TO 01+075.0, ℄ (DOUBLE)
STA. 01+013.3 TO 01+020.0, RT (DOUBLE)
STA. 18+911.8 TO 18+920.0, LT (DOUBLE)
STA. 18+911.8 TO 18+920.0, RT (DOUBLE)
STA. 18+920.0 TO 18+925.8, LT (SINGLE)
STA. 18+920.0 TO 18+925.8, RT (SINGLE)
STA. 18+928.2 TO 18+930.0, LT (SINGLE)
STA. 18+928.2 TO 18+930.0, RT (SINGLE)

646.486 DURABLE 600 MM STOP BAR, RECESSED POLYUREA
646.680 TEMPORARY 600 MM STOP BAR

STA. 01+013.6 (WALDEN HILL RD.)

675.60 ERECTING SALVAGED SIGNS
AS SHOWN - 2

675.50 REMOVING SIGNS
AS SHOWN - 15

646.494 DURABLE LETTER OR SYMBOL, POLYUREA
646.690 TEMPORARY LETTER OR SYMBOL

STA. 01+016.4, LT - "STOP"

MATCH LINE - STA. 18+770 SEE SHEET SP-2

MATCH LINE - STA. 18+930 SEE SHEET SP-4

SEE NOTE 1
PROJECT LIMITS STA. 1+075
STA. 1+071.6, LT.
STA. 1+032.8, RT.
STA. 1+011.7, RT.
STA. 1+030.7, RT.
STA. 1+040.0, LT.
STA. 1+026.4, RT.
STA. 1+014.4, LT.
STA. 1+013.0, RT.
STA. 1+011.8, RT.
STA. 1+018.6, RT.
STA. 18+882.4, LT.
STA. 1+007.8, LT.
STA. 18+929.0, LT.
STA. 18+778.7, RT.
STA. 18+824.0, RT.
STA. 18+886.2, RT.
STA. 18+894.1, RT.
STA. 18+913.6, RT.
STA. 18+675.3, RT.
STA. 18+920.0, LT.
STA. 18+921.6, RT.
SEE NOTE 2

HERE TO CORNER
NO PARKING HERE TO CORNER
SPEED LIMIT 30
T HWY 14
NO PARKING ANY TIME
LEGAL LOAD LIMIT 24,000 POUNDS
RT 2 WEST
WALDEN HILL RD
ANY TIME
RT 2 W
Walden Hill Rd
STOP
HIDDEN DRIVES
AHEAD
BLIND PERSON
STOPPING OR DISCHARGING PASSENGERS PROHIBITED
DANVILLE SCHOOL
KINDERGARTEN THROUGH GRADE TWELVE
B-B

WALDEN HILL ROAD
US ROUTE 2
NEW SIDEWALK
600mm STOP BAR
100 mm YELLOW LINES (TYP)
100 mm WHITE LINE (TYP)
200 mm YELLOW LINE (TYP)
100 mm YELLOW LINE (TYP)
TEMPORARY & DURABLE CROSSWALK MARKING
PAINTED CURB (TYP)
VT STATE PLANE GRID

1.2m
3.3m
3.4m
0.9m
0.2m
0.3m
R=51.1m
R=12.5m
R=0.5m
+000
+020
+040
+060
+882.9
+888.6
+900.0
+913.4
+918.9
+920.9
+929.3
+007.7
+025.0

0 10 20
SCALE 1:250

NOTES:
1. MATCH EXISTING STRIPING CONFIGURATION.
2. SIGNS SHALL BE RETURNED TO THE TOWN OF DANVILLE.
3. SEE SHEET SP-1 FOR LEGEND.

PROJECT NAME:	DANVILLE
PROJECT NUMBER:	F EGC 028-3(32)
FILE NAME: ...\Highway\PlotFiles\103 ps03.ptf	PLOT DATE: 1/18/2011
DESIGN SUPERVISOR: GARY SANTY	DRAWN BY: STANTEC
DESIGNED BY: STANTEC	CHECKED BY: STANTEC
SIGNING & PAVEMENT PLAN SHEET SP-3	SHEET 147 OF 306

Stantec

1/18/2011 1:53:02 PM v:\1853\active\185300033.0892\Highway\PlotFiles\103 ps03.ptf

646.406 DURABLE 100 MM WHITE LINE, RECESSED POLYUREA
646.600 TEMPORARY 100 MM WHITE LINE
STA. 18+930 TO 19+070, LT
STA. 18+930 TO 19+070, RT

646.456 DURABLE 200 MM YELLOW LINE, RECESSED POLYUREA
646.650 TEMPORARY 200 MM YELLOW LINE
STA. 18+934.1 TO 18+960.0 (DIAGONALS)
STA. 19+063.6 TO 19+070.0 (DIAGONALS)

646.416 DURABLE 100 MM YELLOW LINE, RECESSED POLYUREA
646.610 TEMPORARY 100 MM YELLOW LINE
STA. 18+930.0 TO 18+934.1, LT (SINGLE)
STA. 18+930.0 TO 18+934.1, RT (SINGLE)
STA. 18+934.1 TO 18+960.0, LT (DOUBLE)
STA. 18+934.1 TO 18+960.0, RT (DOUBLE)
STA. 18+960.0 TO 19+063.6, ℄ (DOUBLE)
STA. 19+063.6 TO 19+070.0, LT (DOUBLE)
STA. 19+063.6 TO 19+070.0, RT (DOUBLE)

646.81 PAINTED CURB
STA. 18+930.0 TO 18+934.5 (AROUND ISLAND)

675.50 REMOVING SIGNS
AS SHOWN - 9

678.16 FLASHING BEACON, GROUND MOUNTED
STA. 19+045.0, LT

N
VT STATE PLANE GRID

STA. 18+939.4, LT.
R
R
R

MATCH LINE – STA. 18+930 SEE SHEET SP-3

200 mm YELLOW LINE (TYP)
100 mm YELLOW LINE (TYP)

STA. 19+014.6, LT.
R
R END
R

STA. 19+029.6, LT.
The Danville Inn
RESTAURANT
BED & BREAKFAST
GIFT SHOP
RET

STA. 19+031.5, LT.
R R
SCHOOL
SPEED LIMIT 25
WHEN FLASHING
R R R

STA. 19+045.0, LT.
N N
SCHOOL
SPEED LIMIT 25 WHEN FLASHING
N N N

STA. 19+010.0, LT.
N
N AHEAD
N N

+000.0
+064.8

1.2m
3.3m
PAINTED CURB
US ROUTE 2
18+940
3.2m
0.3m
18+960
3.3m
1.2m
18+980
19+000
19+020
19+040
3.3 m
19+060
3.4m
1.2m
+960.0
+939.1
+063.6

STA. 18+986.5, RT.
R
R END
R

100 mm WHITE LINE (TYP)
100 mm YELLOW LINES (TYP)

STA. 19+038.1, RT.
DANVILLE SERVICE CENTER
AUTO REPAIR
BRAKES - EXHAUST
FRONT END ALIGNMENT
TIRES - BATTERIES
STATE INSPECTION
TUNE UPS
SHOCKS & STRUTS
RET

STA. 19+056.2, RT.
N
N

STA. 18+996.7, RT.
RET

STA. 18+934.0, RT.
N
N B-B N
N

STA. 19+013.9, RT.
DANVILLE HEALTH CENTER → RET
DANVILLE HARDWARE ← 1/10 RET
DIAMOND HILL STORE ← 1/4 RET
RET RET

MATCH LINE – STA. 19+070 SEE SHEET SP-5

NOTE:
SEE SHEET SP-1 FOR LEGEND.

0 10 20
SCALE 1:250

Stantec

PROJECT NAME: DANVILLE
PROJECT NUMBER: F EGC 028-3(32)

FILE NAME: ...\Highway\PlotFiles\104 ps04.ptf
PLOT DATE: 1/18/2011
DESIGN SUPERVISOR: GARY SANTY
DRAWN BY: STANTEC
DESIGNED BY: STANTEC
CHECKED BY: STANTEC
SIGNING & PAVEMENT PLAN SHEET SP-4
SHEET 148 OF 306

1/18/2011 11:53:04 PM v:\1953\active\19530033.1092\Highway\PlotFiles\104 ps04.ptf

646.456 DURABLE 200 MM YELLOW LINE, RECESSED POLYUREA
646.650 TEMPORARY 200 MM YELLOW LINE

STA. 19+070.0 TO 19+101.2 (DIAGONALS)
STA. 19+133.4 TO 19+160.0 (DIAGONALS)
STA. 19+184.7 TO 19+186.1 (DIAGONALS)
STA. 19+188.6 TO 19+219.2 (DIAGONALS)
STA. 19+231.0 TO 19+258.5 (DIAGONALS)

646.486 DURABLE 600 MM STOP BAR, RECESSED POLYUREA
646.680 TEMPORARY 600 MM STOP BAR

STA. 19+158.5, RT
STA. 19+190.1, LT
STA. 03+013.6, LT (HILL ST.)
STA. 04+022.6, LT (PEACHAM RD.)
STA. 05+019.0 LT & RT (SMITH ST.)

646.416 DURABLE 100 MM YELLOW LINE, RECESSED POLYUREA
646.610 TEMPORARY 100 MM YELLOW LINE

STA. 19+070.0 TO 19+101.5, LT (DOUBLE)
STA. 19+101.5 TO 19+114.8, LT (SINGLE)
STA. 19+070.0 TO 19+114.5, RT (DOUBLE)
STA. 19+117.2 TO 19+120.3, LT (SINGLE)
STA. 19+116.9 TO 19+120.3, RT (DOUBLE)
STA. 19+132.6 TO 19+135.0, RT (DOUBLE)
STA. 19+132.6 TO 19+160.1, LT (DOUBLE)
STA. 19+135.0 TO 19+160.1, RT (SINGLE)
STA. 03+012.9 TO 03+017.3, ℄ (DOUBLE)
STA. 04+022.6 TO 04+033.0, ℄ (DOUBLE)
STA. 19+184.5 TO 19+186.1, RT (SINGLE)
STA. 19+188.5 TO 19+208.3, RT (SINGLE)
STA. 19+184.5 TO 19+186.2, LT (DOUBLE)
STA. 19+188.6 TO 19+219.2, LT (DOUBLE)
STA. 19+231.0 TO 19+260.0, LT (DOUBLE)
STA. 19+231.0 TO 19+260.0, RT (DOUBLE)
STA. 19+208.3 TO 19+219.2, RT (DOUBLE)

646.494 DURABLE LETTER OR SYMBOL, POLYUREA
646.690 TEMPORARY LETTER OR SYMBOL
STA. 05+021.8, "STOP"

646.81 PAINTED CURB

STA. 19+101.2 TO 19+114.8, ℄ & RT
STA. 19+117.2 TO 19+120.0, ℄ & RT
STA. 19+133.4 TO 19+160.0, RT
STA. 19+184.7 TO 19+186.1, RT
STA. 19+188.6 TO 19+209.8, RT

646.700 TEMPORARY CROSSWALK MARKING
646.507 DURABLE CROSSWALK MARKING, RECESSED TYPE I TAPE

STA. 19+116.0
STA. 19+187.4
STA. 2+011.0 (PARK STREET)
STA. 4+019.9 (PEACHAM ROAD)
STA. 3+010.9 (HILL STREET)
STA. 5+016.3 (SMITH STREET)
(SEE DETAIL SHEET SGD-1)

675.60 ERECTING SALVAGED SIGNS
AS SHOWN - 1

675.50 REMOVING SIGNS
AS SHOWN - 44

646.406 DURABLE 100 MM WHITE LINE, RECESSED POLYUREA
646.600 TEMPORARY 100 MM WHITE LINE

STA. 19+070.0, LT TO 19+115.0, LT
STA. 19+117.4, LT TO 03+008.8, LT
STA. 19+070.0, RT TO 19+114.3, RT
STA. 19+116.7, RT TO 19+121.3, RT
STA. 19+132.4, RT TO 04+018.5, RT
STA. 04+013.5, LT TO 04+018.8, LT
STA. 03+010.4, RT TO 19+186.1, LT
STA. 19+188.6, LT TO 19+260.0, LT
STA. 19+188.5, RT TO 05+014.9, RT
STA. 05+013.1, LT TO 19+260.0, RT

678.16 FLASHING BEACON, GROUND MOUNTED
STA. 19+251.0, LT

VTrans Metric

N
VT STATE PLANE GRID

MATCH LINE – STA. 19+070 SEE SHEET SP-4

MATCH LINE – STA. 19+260 SEE SHEET SP-7

STA. 19+110.2, RT.

STA. 2+013.6, RT.
Park St N N

STA. 3+013.0, LT.
N RT 2 E N Hill St N

STA. 19+124.1, LT.

STA. 2+015.4, LT.
N ONE WAY
B-B
N ONE WAY
N LEGAL LOAD LIMIT 24,000 POUNDS N

MATCH EXISTING MARKINGS

STA. 3+028.0, RT.
LEGAL LOAD LIMIT 24,000 POUNDS N

HILL ST. 3+020

TEMPORARY & DURABLE 600 mm STOP BAR (TYP)

STA. 19+240.3, LT.

STA. 19+251.0, LT.
N N
SCHOOL
SPEED LIMIT 25 WHEN FLASHING
N N

100 mm WHITE LINE (TYP)

200 mm YELLOW LINE (TYP)

PAINTED CURB

19+080
19+100
19+120
19+140
19+160
19+180
19+200
19+220
19+240

US ROUTE 2

100 mm YELLOW LINE (DOUBLE) (TYP)

PARK ST.

SMITH ST.

STA. 5+019.4, LT.
STOP N
0020
0303
0450
N

TEMPORARY & DURABLE CROSSWALK MARKING (TYP.)
TEMPORARY & DURABLE LETTER OR SYMBOL

STA. 19+090.5, RT.
N Sherryland Guests ½
N Dany. Morgan Horse Farm
N American Society of Dowsers
N N

MATCH LINE – STA. 2+020 SEE SHEET SP-6

STA. 19+151.4, RT.
THADDEUS STEVENS
S S S S

STA. 19+200.3, RT.
N EAST 2 N

PEACHAM RD.

MATCH LINE – STA. 5+025 SEE SHEET SP-6

STA. 5+015.1, LT.
N RT 2 E N Smith St

STA. 5+015.6, RT.
B-B
ONE WAY N
ONE WAY N
DO NOT ENTER N
N

B-B
ONE WAY N
ONE WAY N
DO NOT ENTER N
N N

MATCH LINE – STA. 4+033 SEE SHEET SP-6

STA. 19+154.9, RT.
N St. Johnsbury 10
N. Danville 5
Danville School
Peacham 7
Groton 16
N N

STA. 4+024.0, RT.
N RT 2 E N Peacham Rd N

19+217.3, RT.
N N

STA. 19+101.9, RT.
STA. 19+119.4, RT.
STA. 19+134.1, RT.
STA. 19+159.3, RT.
STA. 19+185.3, RT.
STA. 19+209.3, RT.
N B-B N N

NOTES:
1. FOR CLARITY, SHEET 5 HAS BEEN SEPARATED INTO TWO SHEETS: EXISTING SIGNS ON SHEET 5A, PROPOSED SIGNS ON SHEET 5.
2. SEE SHEET SP-1 FOR LEGEND.

0 10 20
SCALE 1:250

Stantec

PROPOSED SIGNS

PROJECT NAME: DANVILLE
PROJECT NUMBER: F EGC 028-3(32)

FILE NAME: ...\Highway\PlotFiles\105 ps05.ptf | PLOT DATE: 1/18/2011
DESIGN SUPERVISOR: GARY SANTY | DRAWN BY: STANTEC
DESIGNED BY: STANTEC | CHECKED BY: STANTEC
SIGNING & PAVEMENT PLAN SHEET SP-5 | SHEET 149 OF 306

1/18/2011 1:53:06 PM v:\1953\active\19530033_1092\Highway\PlotFiles\105 ps05.ptf

VTrans Metric

N

VT STATE PLANE GRID

STA. 19+086.2, LT.

STA. 19+122.5, LT.

STA. 19+122.5, LT.

BEGIN

STA. 19+199.4, RT.

STA. 3+012.7, LT.

STOP

0020 0303 0450

LEGAL LOAD LIMIT 24,000 POUNDS

B-B

NO PARKING THIS SIDE OF STREET

STA. 5+010.7, LT.

STOP

0020 0303 0450

STA. 5+010.5, RT.

LEGAL LOAD LIMIT 24,000 POUNDS

STA. 19+251.0, LT.

SCHOOL

SPEED LIMIT 25

WHEN FLASHING

MATCH LINE – STA. 19+070 SEE SHEET SP-4

MATCH LINE – STA. 19+260 SEE SHEET SP-7

MATCH LINE – STA. 2+020 SEE SHEET SP-6

MATCH LINE – STA. 5+020 SEE SHEET SP-6

MATCH LINE – STA. 4+033 SEE SHEET SP-6

HILL ST.

PARK ST.

SMITH ST.

PEACHAM RD.

US ROUTE 2

STA. 19+082.9, RT.

BEGIN

STA. 19+082.8, RT.

Passumpsic Savings Bank

RET ATM

STA. 19+112.1, RT.

STA. 2+013.6, RT.

PARK ST.

STA. 19+151.5, RT.

THADDEUS STEVENS

Reconstruction Congressman

Spent Boyhood near here

R&S

STA. 2+007.4, LT.

STOP

PARK ST.

B-B

LEGAL LOAD LIMIT 24,000 POUNDS

STA. 19+154.6, RT.

END

STA. 19+165.4, RT.

N. DANVILLE 5

DANVILLE SCHOOL

PEACHAM 7

GROTON 16

B-B

STA. 4+010.0, LT.

RT 2 EAST

PEACHAM RD.

STOP

B-B

LEGAL LOAD LIMIT 24,000 POUNDS

STA. 19+196.5, RT.

RT 2 EAST

BRAINDARD RD.

STOP

B-B

LEGAL LOAD LIMIT 24,000 POUNDS

STA. 19+201.0, RT.

Sherryland Guests ½

Danv. Morgan Horse Farm

American Society of Dowsers

NOTES:
1. FOR CLARITY, SHEET 5 HAS BEEN SEPARATED INTO TWO SHEETS: EXISTING SIGNS ON SHEET 5A, PROPOSED SIGNS ON SHEET 5.
2. SEE SHEET SP-1 FOR LEGEND.

EXISTING SIGNS

0 10 20

SCALE 1:250

Stantec

PROJECT NAME:	DANVILLE
PROJECT NUMBER:	F EGC 028-3(32)
FILE NAME: ...\PlotFiles\106 ps05a.ptf	PLOT DATE: 1/18/2011
DESIGN SUPERVISOR: GARY SANTY	DRAWN BY: STANTEC
DESIGNED BY: STANTEC	CHECKED BY: STANTEC
SIGNING & PAVEMENT PLAN SHEET SP-5A	SHEET 150 OF 306

1/18/2011 1:53:08 PM v:\0953\active\09530033.0102\highway\PlotFiles\106 ps05a.ptf

675.50 REMOVING SIGNS
AS SHOWN - 11

646.486 DURABLE 600 MM STOP BAR, RECESSED POLYUREA
646.680 TEMPORARY 600 MM STOP BAR
STA. 2+137.3, LT & RT (PARK ST.)
STA. 2+154.7, LT (PARK ST.)

646.700 TEMPORARY CROSSWALK MARKING
646.507 DURABLE CROSSWALK MARKING, RECESSED TYPE I TAPE
STA. 2+210.9, LT & RT (PARK STREET)
STA. 2+151.9, LT & RT (PARK STREET)
STA. 4+112.4, (PEACHAM ROAD)
(SEE DETAIL SHEET SGD-11)

646.416 DURABLE 100 MM YELLOW LINE, RECESSED POLYUREA
646.610 TEMPORARY 100 MM YELLOW LINE
STA. 4+033.0 TO 4+098.3,℄ (DOUBLE)
STA. 2+154.4 TO 2+209.7,℄ (DOUBLE)
STA. 2+212.1 TO 2+244.6,℄ (DOUBLE)

NOTES:
1. MATCH EXISTING STRIPING CONFIGURATION.
2. REMOVED STREET NAME SIGNS SHALL BE RETURNED TO THE TOWN OF DANVILLE.
3. SEE SHEET SP-1 FOR LEGEND

646.494 DURABLE LETTER OR SYMBOL, POLYUREA
646.690 TEMPORARY LETTER OR SYMBOL
STA. 2+134.6 - "STOP"
STA. 2+157.5, LT - "STOP"

VTrans Metric

N
VT STATE PLANE GRID

MATCH LINE - STA. 2+020 SEE SHEET SP-5

MATCH LINE - STA. 4+033 SEE SHEET SP-5

MATCH LINE - STA. 5+025 SEE SHEET SP-5

STA. 2+066.7, RT.
Hamilton House
Bed & Breakfast
196 PARK STREET
RET

STA 2+136.4, LT.
ONE WAY
ONE WAY
DO NOT ENTER
END ONE WAY
B-B

STA. 4+089.4, RT.

100 mm YELLOW LINE (TYP)

STA. 4+113.9, LT.

STA. 4+115.4, RT.

STA. 2+105.0, RT.
AHEAD

STA. 2+136.6, RT.
Park St
Peacham Rd
STOP

STA. 2+138.1, RT.
ONE WAY
ONE WAY
DO NOT ENTER
END ONE WAY
B-B

STA. 2+141.8, RT.
STOP
PARK ST
PEACHAM RD.
SEE NOTE 1

STA. 4+120.2, RT.
LEGAL LOAD LIMIT 24,000 POUNDS

STA. 4+121.1, LT.

STA. 2+154.7, LT.
STOP
STOP

STA. 2+162.7, RT.
ANY TIME

STA. 2+166.9, RT.
ANY TIME

600 mm STOP BAR (TYP)

TEMPORARY & DURABLE LETTER OR SYMBOL (TYP)

TEMPORARY & DURABLE CROSSWALK MARKING (TYP)

STA. 5+066.3, LT.
FINLEY DR
SMITH ST

STA. 5+064.1, LT.
Finley Rd
Smith St

STA. 5+107.5, RT.
Park St
Smith St
ONE WAY
ONE WAY
B-B

STA. 2+200.0, RT.
YIELD

STA. 5+108.1, LT.
PARK ST
BRAINERD ST
SEE NOTE 2

STA. 2+209.1, LT.
Joe's Brook Rd

STA. 2+212.4, LT.

STA. 2+209.7, RT.

STA. 2+217.0, RT.
LEGAL LOAD LIMIT 24,000 POUNDS

STA. 2+236.4, RT.
SPEED LIMIT 30

STA. 2+239.4, RT.
SPEED LIMIT 30

100mm YELLOW LINE (TYP)

3.60m
3.90m
3.75m
3.75m
3.75m
3.75m
229.7

0 10 20
SCALE 1:250

Stantec

PROJECT NAME: DANVILLE
PROJECT NUMBER: F EGC 028-3(32)

FILE NAME: ...\Highway\PlotFiles\107 ps06.ptf
PLOT DATE: 1/18/2011
DESIGN SUPERVISOR: GARY SANTY
DRAWN BY: STANTEC
DESIGNED BY: STANTEC
CHECKED BY: STANTEC
SIGNING & PAVEMENT PLAN SHEET SP-6
SHEET 151 OF 306

1/18/2011 15:30 PM v:\1953\active\19530033.0092\Highway\PlotFiles\107 ps06.ptf

646.406 DURABLE 100 MM WHITE LINE, RECESSED POLYUREA
646.600 TEMPORARY 100 MM WHITE LINE
STA. 19+260.0, LT TO 06+009.3, LT
STA. 06+009.3, RT TO 19+450.0, LT
STA. 19+260.0, RT TO 07+011.3, RT
STA. 07+011.7, LT TO 19+450.0, RT

646.416 DURABLE 100 MM YELLOW LINE, RECESSED POLYUREA
646.610 TEMPORARY 100 MM YELLOW LINE
STA. 19+260.0 TO 19+428.4, ℄ (DOUBLE)
STA. 06+012.3 TO 06+027.5, ℄ (DOUBLE)
STA. 07+012.3 TO 07+027.5, ℄ (DOUBLE)
STA. 19+440.5 TO 19+450.0, ℄ (DOUBLE)

646.486 DURABLE 600 MM STOP BAR, RECESSED POLYUREA
646.680 TEMPORARY 600 MM STOP BAR
STA. 06+012.3, LT (HIGHLAND AVE.)
STA. 07+012.3, LT (MOUNTAIN VIEW RD.)

646.494 DURABLE LETTER OR SYMBOL, POLYUREA
646.690 TEMPORARY LETTER OR SYMBOL
STA. 06+015.1, LT. - "STOP"
STA. 07+015.1, LT. - "STOP"
STA. 19+283.0, LT. - "SCHOOL"

675.50 REMOVING SIGNS
AS SHOWN - 15

675.60 ERECTING SALVAGED SIGNS
AS SHOWN - 1

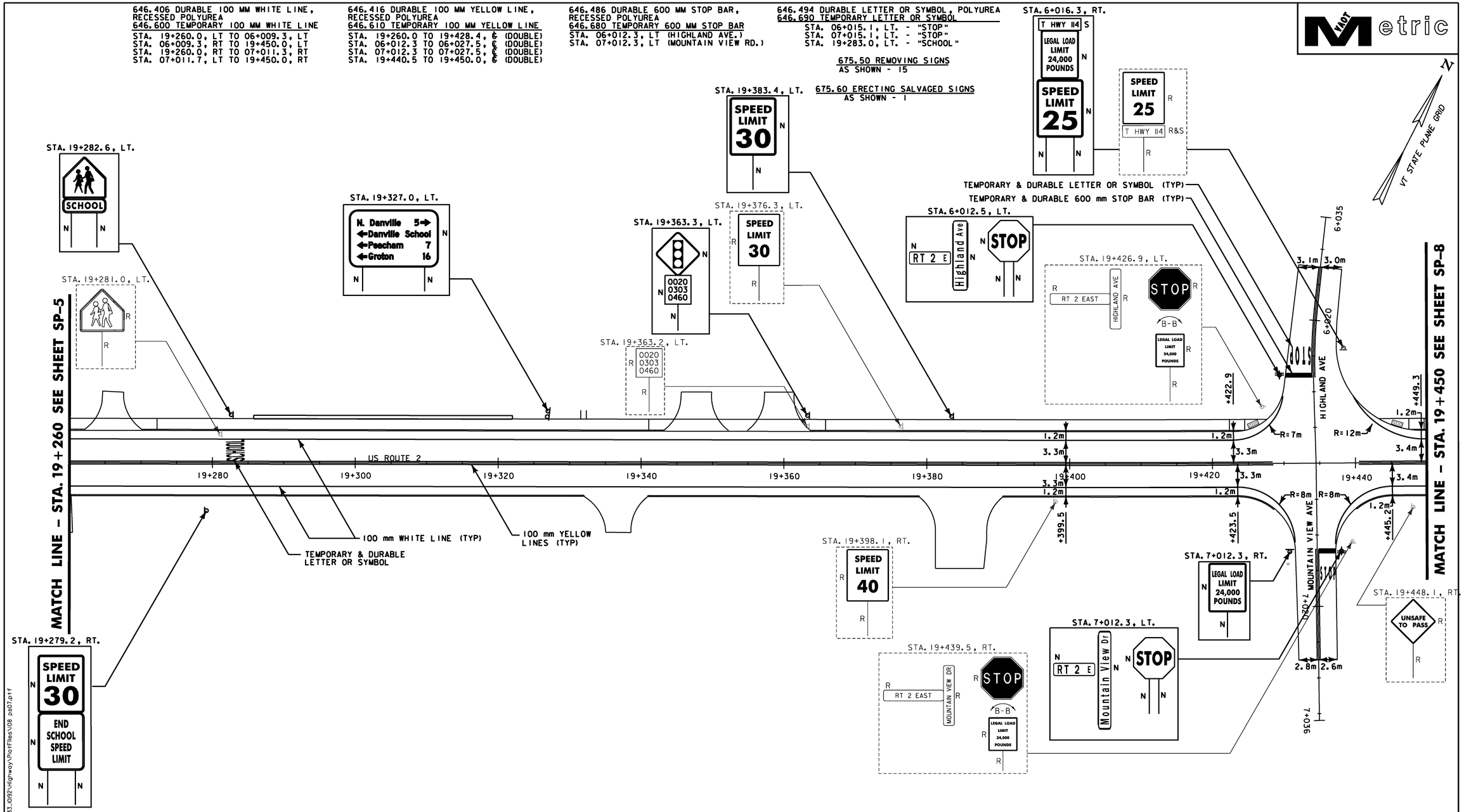

NOTE:
SEE SHEET SP-1 FOR LEGEND.

0 10 20
SCALE 1:250

Stantec

PROJECT NAME: DANVILLE	
PROJECT NUMBER: F EGC 028-3(32)	
FILE NAME: ...\Highway\PlotFiles\108 ps07.ptf	PLOT DATE: 1/18/2011
DESIGN SUPERVISOR: GARY SANTY	DRAWN BY: STANTEC
DESIGNED BY: STANTEC	CHECKED BY: STANTEC
SIGNING & PAVEMENT PLAN SHEET SP-7	SHEET 152 OF 306

1/18/2011 1:53:12 PM v:\1953\active\195310033_10192\Highway\PlotFiles\108 ps07.ptf

646.406 DURABLE 100 MM WHITE LINE,
RECESSED POLYUREA
646.600 TEMPORARY 100 MM WHITE LINE
STA. 19+450.0 TO 19+590.0, LT
STA. 19+450.0 TO 19+590.0, RT

646.456 DURABLE 200 MM YELLOW LINE,
RECESSED POLYUREA
646.650 TEMPORARY 200 MM YELLOW LINE
STA. 19+558.0 TO 19+590.0 (DIAGONALS)

646.416 DURABLE 100 MM YELLOW LINE,
RECESSED POLYUREA
646.610 TEMPORARY 100 MM YELLOW LINE
STA. 19+450.0 TO 19+558.0, ℄ (DOUBLE)
STA. 19+558.0 TO 19+590.0, LT (DOUBLE)
STA. 19+558.0 TO 19+590.0, RT (DOUBLE)

675.50 REMOVING SIGNS
AS SHOWN - 4

VDOT Metric

N

VT STATE PLANE GRID

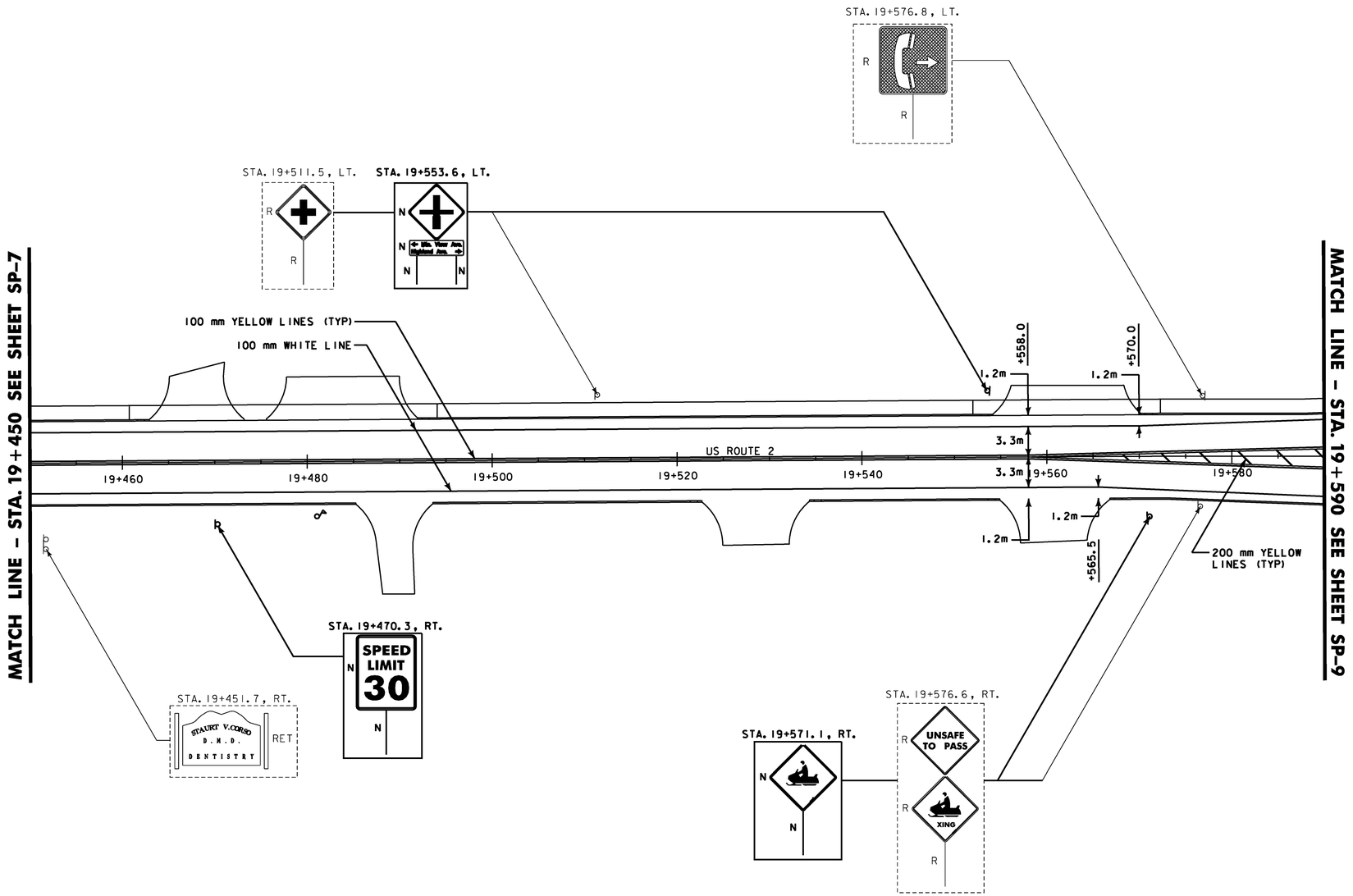

NOTE:
SEE SHEET SP-1 FOR LEGEND.

0 10 20
SCALE 1:250

Stantec

PROJECT NAME: DANVILLE	
PROJECT NUMBER: F EGC 028-3(32)	
FILE NAME: ...\Highway\PlotFiles\109 ps08.ptf	PLOT DATE: 1/18/2011
DESIGN SUPERVISOR: GARY SANTY	DRAWN BY: STANTEC
DESIGNED BY: STANTEC	CHECKED BY: STANTEC
SIGNING & PAVEMENT PLAN SHEET SP-8	SHEET 153 OF 306

1/18/2011 1:53:14 PM v:\1953\active\195300333.1092\Highway\PlotFiles\109 ps08.ptf

646.416 DURABLE 100 MM YELLOW LINE, RECESSED POLYUREA
646.610 TEMPORARY 100 MM YELLOW LINE
STA. 19+590.0 TO 19+612.9, LT (DOUBLE)
STA. 19+590.0 TO 19+612.9, RT (DOUBLE)
STA. 19+612.9 TO 19+647.4, LT (SINGLE)
STA. 19+612.9 TO 19+647.4, RT (SINGLE)
STA. 19+647.4 TO 19+702.0, LT (DOUBLE)
STA. 19+702.0 TO 19+755.8, ℄ (DOUBLE)
STA. 19+647.4 TO 19+755.8, RT (DOUBLE)
STA. 19+755.8 TO 19+760.0, ℄ (DOUBLE)

646.406 DURABLE 100 MM WHITE LINE, RECESSED POLYUREA
646.600 TEMPORARY 100 MM WHITE LINE
STA. 19+590.0 TO 19+760.0, LT
STA. 19+590.0 TO 19+760.0, RT
STA. 19+695.8 TO 19+755.8, RT (DASHED)
STA. 19+755.8 TO 19+760.0, RT

675.50 REMOVING SIGNS
AS SHOWN - 9

646.456 DURABLE 200 MM YELLOW LINE, RECESSED POLYUREA
646.650 TEMPORARY 200 MM YELLOW LINE
STA. 19+590.0 TO 19+612.9 (DIAGONALS)
STA. 19+647.4 TO 19+755.8 (DIAGONALS)

646.81 PAINTED CURB
STA. 19+612.6 TO 19+647.4 (AROUND ISLAND)

675.60 ERECTING SALVAGED SIGNS
AS SHOWN - 5

646.494 DURABLE LETTER OR SYMBOL, POLYUREA
646.690 TEMPORARY LETTER OR SYMBOL
STA. 19+758.0, RT - "ONLY"

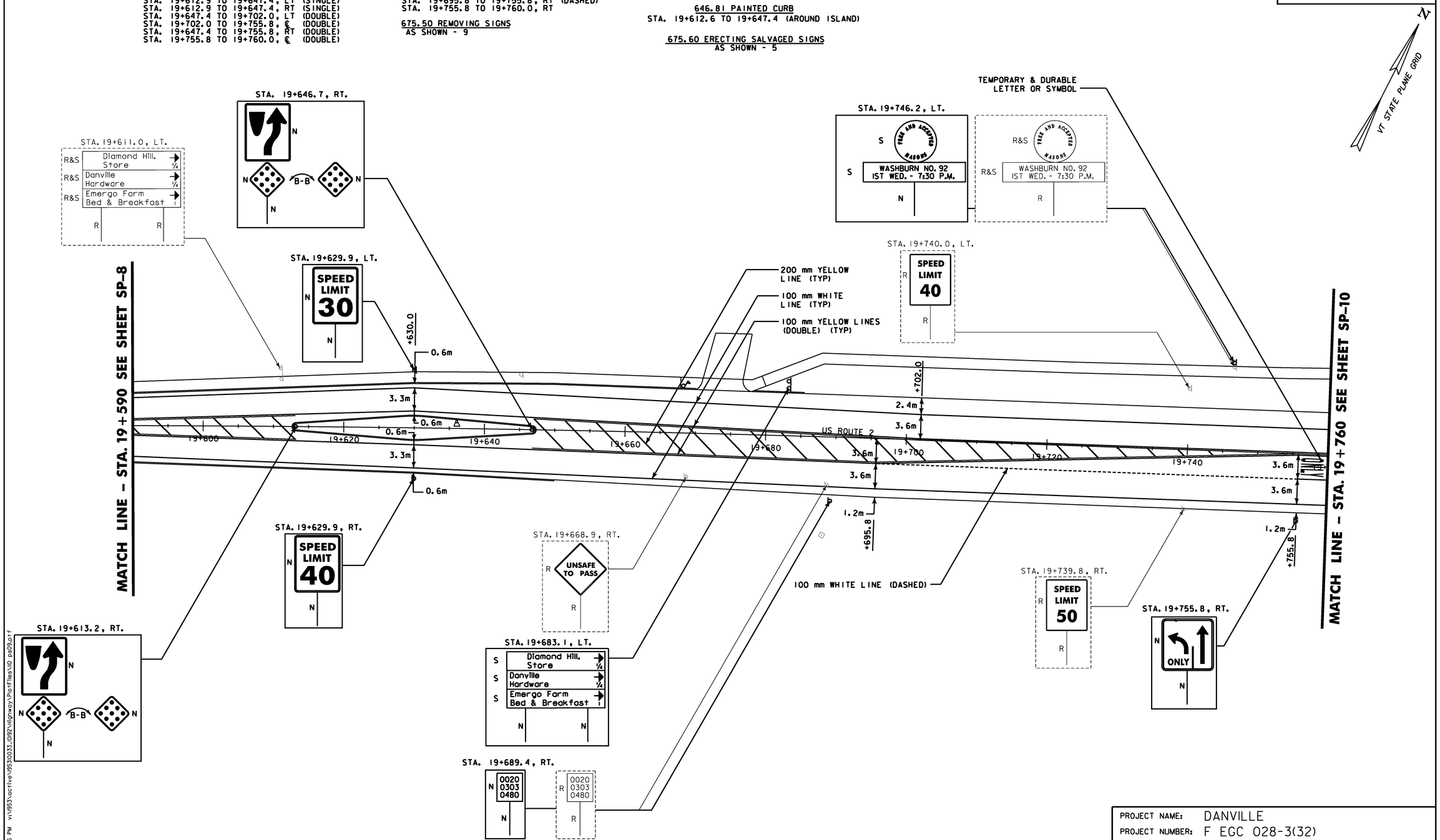

NOTE:
SEE SHEET SP-1 FOR LEGEND.

0 10 20
SCALE 1:250

Stantec

PROJECT NAME: DANVILLE	
PROJECT NUMBER: F EGC 028-3(32)	
FILE NAME: ...\Highway\PlotFiles\110 ps09.ptf	PLOT DATE: 1/18/2011
DESIGN SUPERVISOR: GARY SANTY	DRAWN BY: STANTEC
DESIGNED BY: STANTEC	CHECKED BY: STANTEC
SIGNING & PAVEMENT PLAN SHEET SP-9	SHEET 154 OF 306

1/18/2011 1:53:15 PM v:\1953\active\1953\0033_10192\Highway\PlotFiles\110 ps09.ptf

646.416 DURABLE 100 MM YELLOW LINE, RECESSED POLYUREA
646.610 TEMPORARY 100 MM YELLOW LINE

STA. 19+760.0 TO 19+835.8, ℄ (DOUBLE)
STA. 19+851.9 TO 19+910.0, ℄ (DOUBLE)
STA. 19+851.9 TO 19+910.0, RT (DOUBLE)

646.456 DURABLE 200 MM YELLOW LINE, RECESSED POLYUREA
646.650 TEMPORARY 200 MM YELLOW LINE

STA. 19+851.9 TO 19+910.0 RT. (DIAGONAL)

675.50 REMOVING SIGNS

AS SHOWN - 1

646.406 DURABLE 100 MM WHITE LINE, RECESSED POLYUREA
646.600 TEMPORARY 100 MM WHITE LINE

STA. 19+760.0 TO 19+910.0, LT
STA. 19+760.0 TO 19+910.0, RT
STA. 19+760.0 TO 19+835.8, RT

TEMPORARY & POLYUREA LETTER OR SYMBOL

STA. 19+773.6, RT - LEFT TURN ARROW
STA. 19+788.1, RT - "ONLY"
STA. 19+802.8, RT - LEFT TURN ARROW
STA. 19+817.9, RT - "ONLY"
STA. 19+833.7, RT - LEFT TURN ARROW

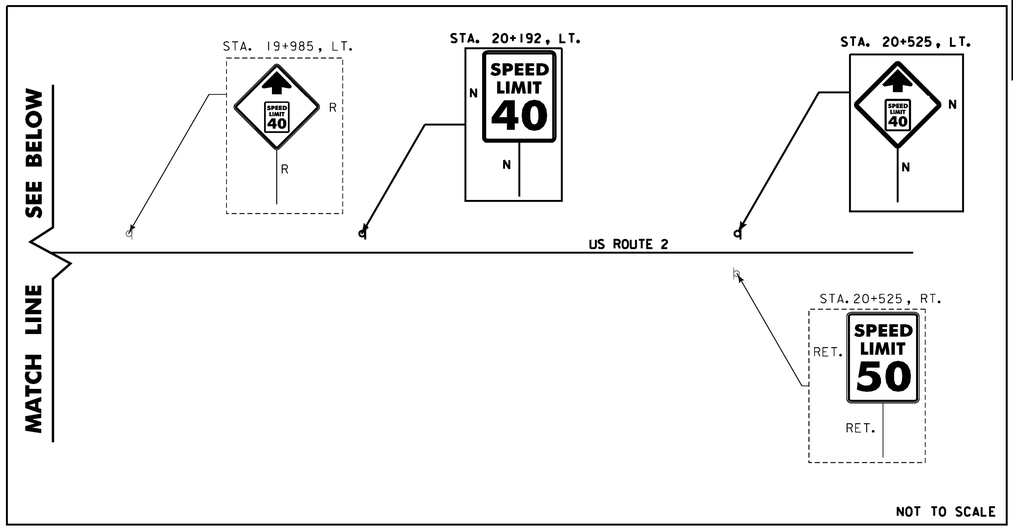

VTrans Metric

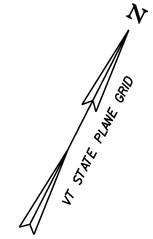

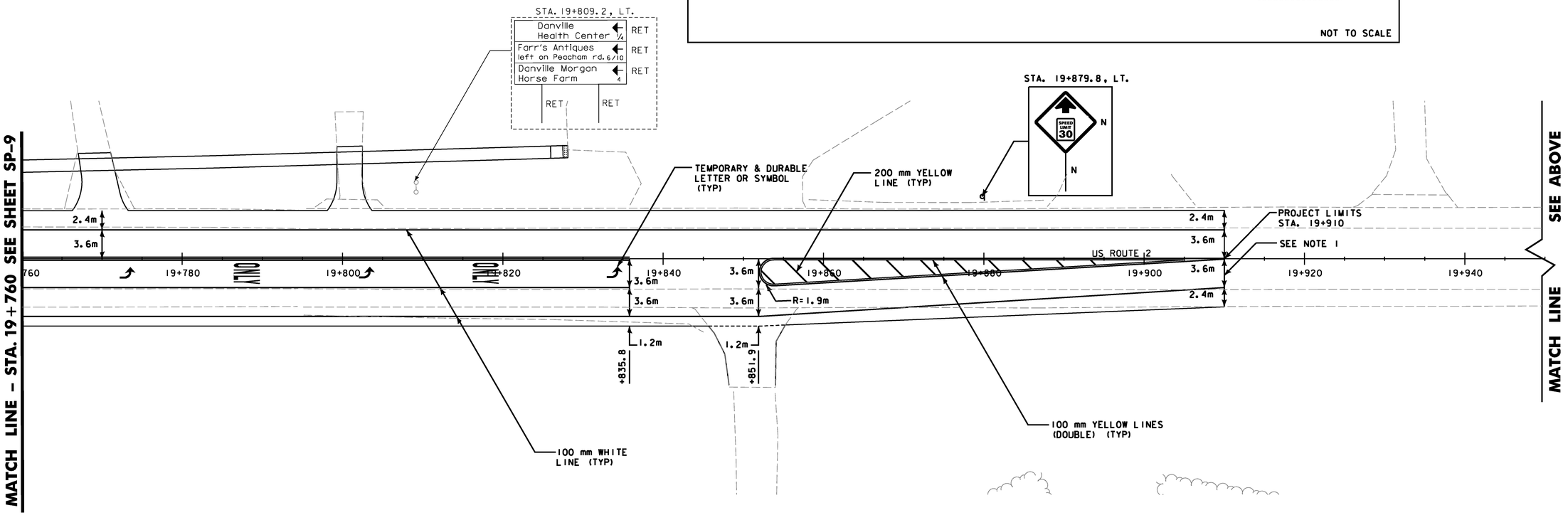

NOTES:
1. MATCH EXISTING STRIPING CONFIGURATION.
2. SEE SHEET SP-1 FOR LEGEND.

0 10 20
SCALE 1:250

Stantec

PROJECT NAME: DANVILLE	
PROJECT NUMBER: F EGC 028-3(32)	
FILE NAME: ...\Highway\PlotFiles\111ps10.ptf	PLOT DATE: 1/18/2011
DESIGN SUPERVISOR: GARY SANTY	DRAWN BY: STANTEC
DESIGNED BY: STANTEC	CHECKED BY: STANTEC
SIGNING & PAVEMENT PLAN SHEET SP-10	SHEET 155 OF 306

1/18/2011 1:53:46 PM v:\1953\active\19531033.1092\Highway\PlotFiles\111ps10.ptf

STATE OF VERMONT
AGENCY OF TRANSPORTATION

TRAFFIC SIGN SUMMARY SHEET 1

VAST Metric

MILEMARKER, STATION, OR SIGN NUMBER	SIGN LEGEND	SIGN DIMENSIONS EA	WIDTH (mm)	HEIGHT (mm)	NEW & SALVAGED SIGNS "A"	"B"	SALV SIGN	SALV TIS	EXIST POST RETAIN	EXIST POST SALVAGE	NEW SIGN POSTS NO. OF POSTS	SQUARE STEEL (mm) 44 kg/m 2.8	50 kg/m 3.6	63 kg/m 5.0	ANCHOR	SLEEVE	TUBULAR ALUMINUM dia.(mm) 75 kg/m 1.9	100.0 kg/m 2.5	100 MOD kg/m 2.5	TUBULAR STEEL dia.(mm) FOUNDATION	75 kg/m 11.3	89 kg/m 13.4	100 kg/m 16.1	125 kg/m 21.8	W-SHAPE STEEL FTG. SIZE 600 mm	750 mm	WEIGHT	POST SIZE	SIGN FRAME REQUIRED	REMARKS	SIGN DETAIL DETAIL ON SHEET NUMBER	STD. SHEET NUMBER
U.S. ROUTE 2 STA. 18+454.9, LT.	SPEED LIMIT 40	1	600	750	0.45						1		4.2		1															R2-1(40)		SHS
STA. 18+462.8, RT.	SPEED LIMIT 30	1	600	750	0.45						1		4.2		1															R2-1(30)		SHS
STA. 18+494.5, RT.	HIDDEN DRIVE	1	750	750	0.56						1		4.2		1															VW-060		E-154
STA. 18+509.1, RT.	SCHOOL	1 1	900 600	900 300	0.81 0.18						2		8.7		2															S1-1 (FYG) S4-3 (FYG)		SHS SHS
STA. 18+526.5, RT.	HAMILTON HOUSE RIGHT ON PARK ST. 0.2 MI FARM'S ANTIQUES RT. ON PEACHAM RD. 1.2 MI ENERGO FARM B&B LEFT AT BLKNG LIGHT 1.5 MI						3				2			8.7	2															NON-PARTICIPATING		E-125
STA. 18+570.3, RT.	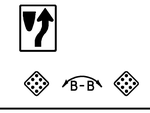	1 1 1	600 450 450	750 450 450	0.45 0.20 0.20						1		4.4		1															R4-7 OMI-1(PLACED BACK TO BACK BELOW KEEP RIGHT SIGN) OMI-1(PLACED BACK TO BACK BELOW KEEP RIGHT SIGN)		SHS SHS SHS
STA. 18+589.7, RT.		1 1 1	600 450 450	750 450 450	0.45 0.20 0.20						1		4.4		1															R4-7 OMI-1(PLACED BACK TO BACK BELOW KEEP RIGHT SIGN) OMI-1(PLACED BACK TO BACK BELOW KEEP RIGHT SIGN)		SHS SHS SHS
STA. 18+620.4, RT.	SCHOOL SPEED LIMIT 25 WHEN FLASHING	1	600	1220	0.73						2		8.7		2															INSTALL (2) FLASHING BEACONS AS DETAILED ON VTrans STANDARDS E-106M & E-175M S5-1(FYG)		SHS
STA. 18+620.4, LT.	SPEED LIMIT 30 END SCHOOL SPEED LIMIT	1 1	600 600	750 750	0.45 0.45						2		9.3		2															R2-1(30) S5-2		SHS SHS
STA. 18+724.4, RT.	0020 0303 0420	1	150	250	0.04						1	3.4			1																	E-138
STA. 18+738.5, LT.	0020 0303 0420	1	150	250	0.04						1	3.4			1																	E-138
STA. 18+741.4, LT.		1	750	750	0.56						1		4.2		1															W11-6H		E-153
												m 6.8	m 52.3	m 8.7 (NP)		EA	kg	kg	kg		kg	kg	kg	kg						FYG = FLUORESCENT YELLOW GREEN		
SHEET TOTALS			m^2 6.42	m^2	EA. 3 (NP)	m^2						m 67.8					kg			EA.	kg				EA.	EA.	kg					

NOTES;

1. FINAL POST LENGTHS ARE TO BE DETERMINED IN THE FIELD. POST SIZES ARE COMPUTED BASED ON INFORMATION FURNISHED ON THE STANDARD SHEETS AND THE VTRANS 'SIGN POST DESIGN GUIDELINE.'
2. ALL OVERHEAD GUIDE SIGNS SHALL HAVE A MINIMUM TYPE IX LEGEND ON TYPE IX BACKGROUND. ALL GROUND MOUNTED GUIDE SIGNS SHALL HAVE A MINIMUM TYPE IX LEGEND ON TYPE III BACKGROUND. ALL CHEVRON SIGNS SHALL HAVE TYPE IX SHEETING. ALL OTHER GROUND MOUNTED SIGNS SHALL HAVE A MINIMUM TYPE III SHEETING.

Stantec

PROJECT NAME: DANVILLE
PROJECT NUMBER: F EGC 028-3(32)

FILE NAME: ...\traffic sign summary.ptf
DESIGN SUPERVISOR: GARY SANTY
DESIGNED BY: STANTEC
TRAFFIC SIGN SUMMARY SHEET TSS-1

PLOT DATE: 1/18/2011
DRAWN BY: STANTEC
CHECKED BY: STANTEC
SHEET 156 OF 306

v:\1953\active\1953033\1092\highway\plotfiles\traffic sign summary.ptf 1/18/2011 1:53:48 PM

STATE OF VERMONT
AGENCY OF TRANSPORTATION

TRAFFIC SIGN SUMMARY SHEET 2

VAOT Metric

MILEMARKER, STATION, OR SIGN NUMBER	SIGN LEGEND	SIGN DIMENSIONS EA	WIDTH (mm)	HEIGHT (mm)	NEW & SALVAGED SIGNS "A"	"B"	SALV SIGN	SALV TIS	EXIST POST RETAIN	EXIST POST SALVAGE	NEW SIGN POSTS NO. OF POSTS	SQUARE STEEL (mm) 44 kg/m 2.8	50 kg/m 3.6	63 kg/m 5.0	ANCHOR	SLEEVE	TUBULAR ALUMINUM dia.(mm) 75 kg/m 1.9	100.0 kg/m 2.5	100 MOD kg/m 2.5	TUBULAR STEEL dia.(mm) FOUNDATION	75 kg/m 11.3	89 kg/m 13.4	100 kg/m 16.1	125 kg/m 21.8	W-SHAPE STEEL FTG. SIZE 600 mm	750 mm	WEIGHT	POST SIZE	SIGN FRAME REQUIRED	REMARKS	SIGN DETAIL DETAIL ON SHEET NUMBER	STD. SHEET NUMBER
STA. 18+768.9, LT.							1			2																				REMOVE AND SALVAGE SIGN ON SAME WOOD POSTS NON-PARTICIPATING		
STA. 18+824.0, RT.		1 1	900 600	900 300	0.81 0.18						2		8.7		2															S1-1 (FGY) W16-9P (FYG)		SHS SHS
STA. 18+882.4, LT.		1	750	750	0.56						1		4.2		1															VW-060		E-154
STA. 18+894.1, RT.							1				1		4.2		1																	
STA. 18+920.0, LT.	 	1 1 1	600 450 450	750 450 450	0.45 0.20 0.20						1		4.4		1															R4-7 OMI-1(PLACED BACK TO BACK BELOW KEEP RIGHT SIGN) OMI-1(PLACED BACK TO BACK BELOW KEEP RIGHT SIGN)		SHS SHS SHS
STA. 18+921.6, RT.		1 1	900 600	900 300	0.81 0.18						2		8.7		2															S1-1 (FYG) W16-7P (FYG)		SHS SHS
STA. 18+929.0, LT.		1 1	900 600	900 300	0.81 0.18						2		8.7		2															S1-1 (FYG) W16-7P (FYG)		SHS SHS
STA. 18+934.0, RT.	 	1 1 1	600 450 450	750 450 450	0.45 0.20 0.20						1		4.4		1															R4-7 OMI-1(PLACED BACK TO BACK BELOW KEEP RIGHT SIGN) OMI-1(PLACED BACK TO BACK BELOW KEEP RIGHT SIGN)		SHS SHS SHS
STA. 19+010.0, LT.		1 1	900 600	900 300	0.81 0.18						2		8.7		2															S1-1 (FGY) W16-9P (FYG)		SHS SHS
STA. 19+056.2, RT.		1	750	750	0.56						1		4.2		1															W3-3		SHS
STA. 19+045.0, LT.		1	600	1220	0.73						2		8.7		2															INSTALL (2) FLASHING BEACONS AS DETAILED ON VTrans STANDARDS E-106M & E-175M S5-1(FYG)		SHS
STA. 19+090.5, RT.		1 1 1	1800 1800 1800	400 400 400	0.72 0.72 0.72						2			8.7	2															NON-PARTICIPATING		E-125
											m 0	m 64.9	m 8.7 (NP)		EA	kg	kg	kg		kg	kg	kg	kg								
SHEET TOTALS			m^2 7.51 2.16 (NP)	m^2	EA. 1 1 (NP)	m^2					m 73.6					kg			EA.	kg				EA.	EA.	kg					

NOTES;

1. FINAL POST LENGTHS ARE TO BE DETERMINED IN THE FIELD. POST SIZES ARE COMPUTED BASED ON INFORMATION FURNISHED ON THE STANDARD SHEETS AND THE VTRANS 'SIGN POST DESIGN GUIDELINE.'
2. ALL OVERHEAD GUIDE SIGNS SHALL HAVE A MINIMUM TYPE IX LEGEND ON TYPE IX BACKGROUND. ALL GROUND MOUNTED GUIDE SIGNS SHALL HAVE A MINIMUM TYPE IX LEGEND ON TYPE III BACKGROUND. ALL CHEVRON SIGNS SHALL HAVE TYPE IX SHEETING. ALL OTHER GROUND MOUNTED SIGNS SHALL HAVE A MINIMUM TYPE III SHEETING.

FYG = FLUORESCENT YELLOW GREEN

Stantec

PROJECT NAME: DANVILLE
PROJECT NUMBER: F EGC 028-3(32)

FILE NAME: ...\traffic sign summary.ptf
DESIGN SUPERVISOR: GARY SANTY
DESIGNED BY: STANTEC
TRAFFIC SIGN SUMMARY SHEET TSS-2

PLOT DATE: 1/18/2011
DRAWN BY: STANTEC
CHECKED BY: STANTEC
SHEET 157 OF 306

v:\1953\active\1953003\...\traffic sign summary.ptf 1/18/2011 1:53:49 PM

STATE OF VERMONT
AGENCY OF TRANSPORTATION

TRAFFIC SIGN SUMMARY SHEET 3

VAST Metric

MILEMARKER, STATION, OR SIGN NUMBER	SIGN LEGEND	SIGN DIMENSIONS EA	WIDTH (mm)	HEIGHT (mm)	NEW & SALVAGED SIGNS "A"	"B"	SALV SIGN	SALV TIS	EXIST POST RETAIN	EXIST POST SALVAGE	NEW SIGN POSTS NO. OF POSTS	SQUARE STEEL (mm) 44 kg/m 2.8	50 kg/m 3.6	63 kg/m 5.0	ANCHOR	SLEEVE	TUBULAR ALUMINUM dia.(mm) 75 kg/m 1.9	100.0 kg/m 2.5	100 MOD kg/m 2.5	TUBULAR STEEL dia.(mm) FOUNDATION	75 kg/m 11.3	89 kg/m 13.4	100 kg/m 16.1	125 kg/m 21.8	W-SHAPE STEEL FTG. SIZE 600 mm	750 mm	WEIGHT	POST SIZE	SIGN FRAME REQUIRED	REMARKS	SIGN DETAIL DETAIL ON SHEET NUMBER	STD. SHEET NUMBER
STA. 19+101.9, RT.	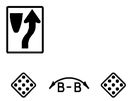	1	600	750	0.45						1		4.4		1															R4-7		SHS
		1	450	450	0.20																									OMI-1(PLACED BACK TO BACK BELOW KEEP RIGHT SIGN)		SHS
		1	450	450	0.20																									OMI-1(PLACED BACK TO BACK BELOW KEEP RIGHT SIGN)		SHS
STA. 19+110.2, RT.		1	900	900	0.81						2		8.7		2															S1-1 (FYG)		SHS
		1	600	300	0.18																									W16-7P (FYG)		SHS
STA. 19+119.4, RT.	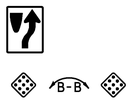	1	600	750	0.45						1		4.4		1															R4-7		SHS
		1	450	450	0.20																									OMI-1(PLACED BACK TO BACK BELOW KEEP RIGHT SIGN)		SHS
		1	450	450	0.20																									OMI-1(PLACED BACK TO BACK BELOW KEEP RIGHT SIGN)		SHS
STA. 19+124.1, LT.		1	900	900	0.81						2		8.7		2															S1-1 (FYG)		SHS
		1	600	300	0.18																									W16-7P (FYG)		SHS
STA. 19+134.1, RT.		1	600	750	0.45						1		4.4		1															R4-7		SHS
		1	450	450	0.20																									OMI-1(PLACED BACK TO BACK BELOW KEEP RIGHT SIGN)		SHS
		1	450	450	0.20																									OMI-1(PLACED BACK TO BACK BELOW KEEP RIGHT SIGN)		SHS
STA. 19+151.4, RT.							1			1																					REMOVE AND SALVAGE ON EXISTING POSTS NON-PARTICIPATING		
STA. 19+154.9, RT.	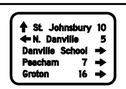	1	2400	1650		3.96					2							27.0													D1-3A	SGD-2	
STA. 19+159.3, RT.	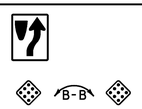	1	600	750	0.45						1		4.4		1															R4-7		SHS
		1	450	450	0.20																									OMI-1(PLACED BACK TO BACK BELOW KEEP RIGHT SIGN)		SHS
		1	450	450	0.20																									OMI-1(PLACED BACK TO BACK BELOW KEEP RIGHT SIGN)		SHS
STA. 19+185.3, RT.	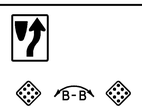	1	600	750	0.45						1		4.4		1															R4-7		SHS
		1	450	450	0.20																									OMI-1(PLACED BACK TO BACK BELOW KEEP RIGHT SIGN)		SHS
		1	450	450	0.20																									OMI-1(PLACED BACK TO BACK BELOW KEEP RIGHT SIGN)		SHS
STA. 19+200.3, RT.		1	600	300	0.20						1		4.1		1															M3-2		SHS
		1	600	600	0.36																									M1-4		SHS
SHEET TOTALS			m²		6.79	m² 3.96	EA. 1 (NP)	m²				m 0	m 43.5	m 0		EA	kg	kg 27.0	kg		kg	kg	kg	kg								

NOTES;

1. FINAL POST LENGTHS ARE TO BE DETERMINED IN THE FIELD. POST SIZES ARE COMPUTED BASED ON INFORMATION FURNISHED ON THE STANDARD SHEETS AND THE VTRANS "SIGN POST DESIGN GUIDELINE."
2. ALL OVERHEAD GUIDE SIGNS SHALL HAVE A MINIMUM TYPE IX LEGEND ON TYPE IX BACKGROUND. ALL GROUND MOUNTED GUIDE SIGNS SHALL HAVE A MINIMUM TYPE IX LEGEND ON TYPE III BACKGROUND. ALL CHEVRON SIGNS SHALL HAVE TYPE IX SHEETING. ALL OTHER GROUND MOUNTED SIGNS SHALL HAVE A MINIMUM TYPE III SHEETING.

FYG = FLUORESCENT YELLOW GREEN

Stantec

PROJECT NAME: DANVILLE
PROJECT NUMBER: F EGC 028-3(32)

FILE NAME: ...\traffic sign summary.ptf
DESIGN SUPERVISOR: GARY SANTY
DESIGNED BY: STANTEC
TRAFFIC SIGN SUMMARY SHEET TSS-3
PLOT DATE: 1/18/2011
DRAWN BY: STANTEC
CHECKED BY: STANTEC
SHEET 158 OF 306

v:\1953\active\19530031_0092\highway\plotting\traffic sign summary.ptf
1/18/20 1:53:20 PM

STATE OF VERMONT
AGENCY OF TRANSPORTATION

TRAFFIC SIGN SUMMARY SHEET 4

VTrans Metric

MILEMARKER, STATION, OR SIGN NUMBER	SIGN LEGEND	SIGN DIMENSIONS EA	WIDTH (mm)	HEIGHT (mm)	NEW & SALVAGED SIGNS "A"	"B"	SALV SIGN	SALV TIS	EXIST POST RETAIN	EXIST POST SALVAGE	NEW SIGN POSTS NO. OF POSTS	SQUARE STEEL (mm) 44 (2.8 kg/m)	50 (3.6 kg/m)	63 (5.0 kg/m)	ANCHOR	SLEEVE	TUBULAR ALUMINUM dia.(mm) 75 (1.9 kg/m)	100.0 (2.5 kg/m)	100 MOD (2.5 kg/m)	TUBULAR STEEL dia.(mm) FOUNDATION	75 (11.3 kg/m)	89 (13.4 kg/m)	100 (16.1 kg/m)	125 (21.8 kg/m)	W-SHAPE STEEL FTG. SIZE 600 mm	FTG. SIZE 750 mm	WEIGHT	POST SIZE	SIGN FRAME REQUIRED	REMARKS	SIGN DETAIL DETAIL ON SHEET NUMBER	STD. SHEET NUMBER
STA. 19+209.3, RT.		1	600	750	0.45						1		4.4		1															R4-7		SHS
		1	450	450	0.20																									OMI-1(PLACED BACK TO BACK BELOW KEEP RIGHT SIGN)		SHS
	B-B	1	450	450	0.20																									OMI-1(PLACED BACK TO BACK BELOW KEEP RIGHT SIGN)		SHS
STA. 19+217.3, RT.		1	600	600	0.36						1		4.1		1															R3-1		SHS
STA. 19+240.3, LT.		1	600	600	0.36						1		4.1		1															R3-2		SHS
STA. 19+251.2, LT.	SCHOOL SPEED LIMIT 25 WHEN FLASHING	1	600	1220	0.73						2		8.7		2															INSTALL (2) FLASHING BEACONS AS DETAILED ON VTrans STANDARDS E-106M & E-175M S5-1(FYG)		SHS
STA. 19+279.2, RT.	SPEED LIMIT 30	1	600	750	0.45						2		9.3		2															R2-1(30)		SHS
	END SCHOOL SPEED LIMIT	1	600	750	0.45																									S5-2		SHS
STA. 19+282.6, LT.	SCHOOL	1	900	900	0.81						2		8.7		2															S1-1 (FYG)		SHS
		1	600	300	0.18																									S4-3 (FYG)		SHS
STA. 19+327.0, LT.	N. Danville 5 Danville School Peacham 7 Groton 16	1	2100	1350		2.84					2						18.2													D1-3A	SGD-2	
STA. 19+363.3, LT.		1	750	750	0.56						1		4.2		1															W3-3		SHS
	0220 0308 0460	1	150	250	0.04																											E-138
STA. 19+383.4, LT.	SPEED LIMIT 30	1	600	750	0.45						1		4.2		1															R2-1(30)		SHS
STA. 19+470.3, RT.	SPEED LIMIT 30	1	600	750	0.45						1		4.2		1															R2-1(30)		SHS
STA. 19+535.6, LT.		1	750	750	0.56						2		8.6		2															W2-1M		SHS
	Mtn. View Ave. Highland Ave.	1	1360	400	0.54																									W16-8A	SGD-2	
STA. 19+571.1, RT.		1	750	750	0.56						1		4.2		1															W11-6H		E-153
SHEET TOTALS					m^2 7.35	m^2 2.84	EA. 0	m^2				m 64.7					kg 18.2			EA.												

NOTES:

1. FINAL POST LENGTHS ARE TO BE DETERMINED IN THE FIELD. POST SIZES ARE COMPUTED BASED ON INFORMATION FURNISHED ON THE STANDARD SHEETS AND THE VTRANS "SIGN POST DESIGN GUIDELINE."
2. ALL OVERHEAD GUIDE SIGNS SHALL HAVE A MINIMUM TYPE IX LEGEND ON TYPE IX BACKGROUND. ALL GROUND MOUNTED GUIDE SIGNS SHALL HAVE A MINIMUM TYPE IX LEGEND ON TYPE III BACKGROUND. ALL CHEVRON SIGNS SHALL HAVE TYPE IX SHEETING. ALL OTHER GROUND MOUNTED SIGNS SHALL HAVE A MINIMUM TYPE III SHEETING.

FYG = FLUORESCENT YELLOW GREEN

Stantec

PROJECT NAME: DANVILLE
PROJECT NUMBER: F EGC 028-3(32)

FILE NAME: ...\traffic sign summary.ptf
DESIGN SUPERVISOR: GARY SANTY
DESIGNED BY: STANTEC
TRAFFIC SIGN SUMMARY SHEET TSS-4

PLOT DATE: 1/18/2011
DRAWN BY: STANTEC
CHECKED BY: STANTEC
SHEET 159 OF 306

1/18/2011 15:22:22 PM v:\1853\active\18530031.1092\highway\plotfiles\traffic sign summary.ptf

STATE OF VERMONT
AGENCY OF TRANSPORTATION

TRAFFIC SIGN SUMMARY SHEET 5

VTrans Metric

MILEMARKER, STATION, OR SIGN NUMBER	SIGN LEGEND	SIGN DIMENSIONS EA	WIDTH (mm)	HEIGHT (mm)	NEW & SALVAGED SIGNS "A"	"B"	SALV SIGN	SALV TIS	EXIST POST RETAIN	EXIST POST SALVAGE	NEW SIGN POSTS NO. OF POSTS	SQUARE STEEL (mm) 44 kg/m 2.8	50 kg/m 3.6	63 kg/m 5.0	ANCHOR	SLEEVE	TUBULAR ALUMINUM dia.(mm) 75 kg/m 1.9	100.0 kg/m 2.5	100 MOD kg/m 2.5	TUBULAR STEEL dia.(mm) FOUNDATION	75 kg/m 11.3	89 kg/m 13.4	100 kg/m 16.1	125 kg/m 21.8	W-SHAPE STEEL FTG. SIZE 600 mm	750 mm	WEIGHT	POST SIZE	SIGN FRAME REQUIRED	REMARKS	SIGN DETAIL DETAIL ON SHEET NUMBER	STD. SHEET NUMBER
STA. 19+613.2, RT.	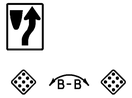	1	600	750	0.45						1		4.4		1															R4-7		SHS
		1	450	450	0.20																									OMI-1(PLACED BACK TO BACK BELOW KEEP RIGHT SIGN)		SHS
		1	450	450	0.20																									OMI-1(PLACED BACK TO BACK BELOW KEEP RIGHT SIGN)		SHS
STA. 19+629.9, LT.		1	600	750	0.45						1		4.2		1															R2-1(30)		SHS
STA. 19+629.9, RT.		1	600	750	0.45						1		4.2		1															R2-1(40)		SHS
STA. 19+646.7, RT.	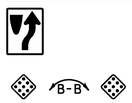	1	600	750	0.45						1		4.4		1															R4-7		SHS
		1	450	450	0.20																									OMI-1(PLACED BACK TO BACK BELOW KEEP RIGHT SIGN)		SHS
		1	450	450	0.20																									OMI-1(PLACED BACK TO BACK BELOW KEEP RIGHT SIGN)		SHS
STA. 19+683.1, LT.							3				2			8.7	2															NON-PARTICIPATING		E-125
STA. 19+689.4, RT.		1	150	250	0.04						1	3.4			1																	E-138
STA. 19+746.2, LT.							2				1		4.2		1															NON-PARTICIPATING		
STA. 19+755.8, LT.		1	750	750	0.56						1		4.2		1															VR-92IL		E-145A
STA. 19+879.8, LT.		1	900	900	0.81						2		8.7		2															W3-5(30)		SHS
STA. 20+192, LT.		1	600	750	0.45						1		4.2		1															R2-1(40)		SHS
STA. 20+525, LT.		1	900	900	0.81						2		8.7		2															W3-5(40)		SHS
WALDEN HILL RD. STA. 1+011.7, RT.		1	600	750	0.45		1				1		4.0		1															INSTALL STREET SIGNS ABOVE LEGAL LOAD LIMIT SIGN USING POST TOP MOUNTING BRACKET		E-141
SHEET TOTALS		m² 5.72	m²	EA. 1 5 (NP)	m²							m 3.4	m 51.2	m 8.7 (NP)	EA		kg	kg	kg	EA.	kg	kg	kg	kg	EA.	EA.	kg					

NOTES;

1. FINAL POST LENGTHS ARE TO BE DETERMINED IN THE FIELD. POST SIZES ARE COMPUTED BASED ON INFORMATION FURNISHED ON THE STANDARD SHEETS AND THE VTRANS "SIGN POST DESIGN GUIDELINE."
2. ALL OVERHEAD GUIDE SIGNS SHALL HAVE A MINIMUM TYPE IX LEGEND ON TYPE IX BACKGROUND. ALL GROUND MOUNTED GUIDE SIGNS SHALL HAVE A MINIMUM TYPE IX LEGEND ON TYPE III BACKGROUND. ALL CHEVRON SIGNS SHALL HAVE TYPE IX SHEETING. ALL OTHER GROUND MOUNTED SIGNS SHALL HAVE A MINIMUM TYPE III SHEETING.

FYG = FLUORESCENT YELLOW GREEN

PROJECT NAME: DANVILLE
PROJECT NUMBER: F EGC 028-3(32)

FILE NAME: ...\traffic sign summary.ptf
DESIGN SUPERVISOR: GARY SANTY
DESIGNED BY: STANTEC
TRAFFIC SIGN SUMMARY SHEET TSS-5

PLOT DATE: 1/18/2011
DRAWN BY: STANTEC
CHECKED BY: STANTEC
SHEET 160 OF 306

Stantec

v:\1953\active\195300311_0092\highway\plotfiles\traffic sign summary.ptf 1/18/2011 1:53:23 PM

STATE OF VERMONT
AGENCY OF TRANSPORTATION

TRAFFIC SIGN SUMMARY SHEET 6

VAOT Metric

MILEMARKER, STATION, OR SIGN NUMBER	SIGN LEGEND	SIGN DIMENSIONS EA	WIDTH (mm)	HEIGHT (mm)	NEW & SALVAGED SIGNS "A"	"B"	SALV SIGN	SALV TIS	EXIST POST RETAIN	SALVAGE	NEW SIGN POSTS NO. OF POSTS	SQUARE STEEL (mm) 44 kg/m 2.8	50 kg/m 3.6	63 kg/m 5.0	ANCHOR	SLEEVE	TUBULAR ALUMINUM dia.(mm) 75 kg/m 1.9	100.0 kg/m 2.5	100 MOD kg/m 2.5	TUBULAR STEEL dia.(mm) FOUNDATION	75 kg/m 11.3	89 kg/m 13.4	100 kg/m 16.1	125 kg/m 21.8	W-SHAPE STEEL FTG. SIZE 600 mm	750 mm	WEIGHT	POST SIZE	SIGN FRAME REQUIRED	REMARKS	SIGN DETAIL DETAIL ON SHEET NUMBER	STD. SHEET NUMBER
STA. 1+014.4, LT.	RT 2 W / STOP / LEFT 450mm	1	600	230	0.14						2		8.7		2															INSTALL STREET SIGNS ABOVE LEGAL LOAD LIMIT SIGN		E-123
		1	900	230	0.21																											E-123
		1	750	750	0.56																									R1-1		SHS
STA. 1+026.4, RT.		1	300	450	0.14						1		3.6		1																SGD-1	
STA. 1+030.7, RT.	SPEED LIMIT 30	1	600	750	0.45						1		4.2		1															R2-1 (30)		SHS
STA. 1+040.0, LT.		1	900	900	0.81						2		9.0		2															S1-1 (FYG)		SHS
		1	600	450	0.27																									W16-6PL (FYG)		SHS
STA. 1+071.6, LT.		1	300	450	0.14						1		3.6		1																SGD-1	
PARK ST. STA. 2+013.6, RT.	Park St	1	600	230	0.14						1		3.7		1																	E-123
STA. 2+015.4, LT.	ONE WAY / ONE WAY / LEGAL LOAD LIMIT 24,000 POUNDS B-B	1	900	300	0.27						1		4.2		1															R6-1L		SHS
		1	900	300	0.27																									R6-1R		SHS
		1	600	750	0.45																									MOUNT ONE WAY SIGNS BACK TO BACK ABOVE LEGAL LOAD LIMIT SIGN		E-141
STA. 2+105.0, RT.	AHEAD	1	750	750	0.56						1		4.2		1															W6-3		SHS
		1	600	300	0.18																									W16-9P		SHS
STA. 2+136.4, LT.	ONE WAY / ONE WAY B-B	1	900	300	0.27						2		8.7		2															R6-1L		SHS
		1	900	300	0.27																									R6-1R		SHS
	DO NOT ENTER	1	750	750	0.56																									R5-1		SHS
	END ONE WAY B-B	1	750	900	0.68																									R6-7 MOUNT ONE WAY SIGNS BACK TO BACK ABOVE LEGAL LOAD LIMIT AND END ONE WAY SIGN		SHS
STA. 2+136.6, RT.	Park St / STOP / Peckham Rd	1	600	230	0.14						1		4.4		1																	E-123
		1	750	230	0.17																									INSTALL STREET SIGNS ABOVE STOP SIGN USING POST TOP MOUNTING BRACKET		E-123
		1	750	750	0.56																									R1-1		SHS
												m 0	m 54.3	m 0		EA	kg	kg	kg		kg	kg	kg	kg								
SHEET TOTALS			m² 7.24	m²	EA. 1	m²						m 54.3					kg			EA.	kg				EA.	EA.	kg					

NOTES:
1. FINAL POST LENGTHS ARE TO BE DETERMINED IN THE FIELD. POST SIZES ARE COMPUTED BASED ON INFORMATION FURNISHED ON THE STANDARD SHEETS AND THE VTRANS "SIGN POST DESIGN GUIDELINE."

2. ALL OVERHEAD GUIDE SIGNS SHALL HAVE A MINIMUM TYPE IX LEGEND ON TYPE IX BACKGROUND. ALL GROUND MOUNTED GUIDE SIGNS SHALL HAVE A MINIMUM TYPE IX LEGEND ON TYPE III BACKGROUND. ALL CHEVRON SIGNS SHALL HAVE TYPE IX SHEETING. ALL OTHER GROUND MOUNTED SIGNS SHALL HAVE A MINIMUM TYPE III SHEETING.

FYG = FLUORESCENT YELLOW GREEN

Stantec

PROJECT NAME: DANVILLE
PROJECT NUMBER: F EGC 028-3(32)

FILE NAME: ...\traffic sign summary.ptf
DESIGN SUPERVISOR: GARY SANTY
DESIGNED BY: STANTEC
TRAFFIC SIGN SUMMARY SHEET TSS-6

PLOT DATE: 1/18/2011
DRAWN BY: STANTEC
CHECKED BY: STANTEC
SHEET 161 OF 306

1/18/2011 14:52:4 PM v:\1953\active\19530031.1092\highway\plotfiles\traffic sign summary.ptf

STATE OF VERMONT
AGENCY OF TRANSPORTATION

TRAFFIC SIGN SUMMARY SHEET 7

VAST Metric

MILEMARKER, STATION, OR SIGN NUMBER	SIGN LEGEND	SIGN DIMENSIONS EA	WIDTH (mm)	HEIGHT (mm)	NEW & SALVAGED SIGNS "A"	"B"	SALV SIGN	SALV TIS	EXIST POST RETAIN	EXIST POST SALVAGE	NEW SIGN POSTS NO. OF POSTS	SQUARE STEEL (mm) 44 (2.8 kg/m)	50 (3.6 kg/m)	63 (5.0 kg/m)	ANCHOR	SLEEVE	TUBULAR ALUMINUM dia.(mm) 75 (1.9 kg/m)	100.0 (2.5 kg/m)	100 MOD (2.5 kg/m)	TUBULAR STEEL dia.(mm) FOUNDATION	75 (11.3 kg/m)	89 (13.4 kg/m)	100 (16.1 kg/m)	125 (21.8 kg/m)	W-SHAPE STEEL FTG. SIZE 600 mm	750 mm	WEIGHT	POST SIZE	SIGN FRAME REQUIRED	REMARKS	SIGN DETAIL DETAIL ON SHEET NUMBER	STD. SHEET NUMBER
STA. 2+138.1, RT.	ONE WAY B-B	1	900	300	0.27						2		8.7		2															R6-1L		SHS
	ONE WAY	1	900	300	0.27																									R6-1R		SHS
	DO NOT ENTER	1	750	750	0.56																									R5-1		SHS
	END ONE WAY B-B	1	750	900	0.68																									R6-7 MOUNT ONE WAY SIGNS BACK TO BACK ABOVE LEGAL LOAD LIMIT AND END ONE WAY SIGN		SHS
STA. 2+154.7, LT.	STOP	1	750	750	0.56						1		4.2		1															R1-1		SHS
STA. 2+162.7, RT.	NOT THIS WAY	1	300	450	0.14						1		3.9		1																SGD-1	
STA. 2+209.1, LT.	JOE'S BROOK RD	1	900	230	0.21						1		3.7		1																	E-123
STA. 2+209.7, RT.		1	750	750	0.56						1		4.2		1															W11-2 (FYG)		SHS
		1	600	300	0.18																									W16-7PL (FYG		SHS
STA. 2+212.4, LT.		1	750	750	0.56						1		4.2		1															W11-2 (FYG)		SHS
		1	600	300	0.18																									W16-7PL (FYG		SHS
STA. 2+217.0, RT.	LEGAL LOAD LIMIT 24,000 POUNDS	1	600	750	0.45						1		4.2		1																	E-141
STA. 2+239.4, RT.	SPEED LIMIT 30	1	600	750	0.45						1		4.2		1															R2-1 (30)		SHS
HILL ST. STA. 3+013.0, LT.	RT 2 E HILL ST	1	600	230	0.14						1		3.9		1																	E-123
		1	600	230	0.14																											
STA. 3+028.0, RT.	LEGAL LOAD LIMIT 24,000 POUNDS	1	600	750	0.45						1		4.2		1																	E-141
PEACHAM RD. STA. 4+024.0, RT.	RT 2 E PEACHAM RD	1	600	230	0.14						1		3.9		1																	E-123
		1	750	230	0.17																											
STA. 4+089.4, RT.		1	600	600	0.36						1		4.1		1															R3-1		SHS
SHEET TOTALS					m^2 6.47	m^2	EA.	m^2				m 0	m 53.4	m 0		EA	kg	kg	kg		kg	kg	kg	kg								
												m 53.4					kg			EA.	kg				EA.	EA.	kg					

NOTES:
1. FINAL POST LENGTHS ARE TO BE DETERMINED IN THE FIELD. POST SIZES ARE COMPUTED BASED ON INFORMATION FURNISHED ON THE STANDARD SHEETS AND THE VTRANS 'SIGN POST DESIGN GUIDELINE.'
2. ALL OVERHEAD GUIDE SIGNS SHALL HAVE A MINIMUM TYPE IX LEGEND ON TYPE IX BACKGROUND. ALL GROUND MOUNTED GUIDE SIGNS SHALL HAVE A MINIMUM TYPE IX LEGEND ON TYPE III BACKGROUND. ALL CHEVRON SIGNS SHALL HAVE TYPE IX SHEETING. ALL OTHER GROUND MOUNTED SIGNS SHALL HAVE A MINIMUM TYPE III SHEETING.

FYG = FLUORESCENT YELLOW GREEN

Stantec

PROJECT NAME: DANVILLE
PROJECT NUMBER: F EGC 028-3(32)

FILE NAME: ...\traffic sign summary.ptf
DESIGN SUPERVISOR: GARY SANTY
DESIGNED BY: STANTEC
TRAFFIC SIGN SUMMARY SHEET TSS-7

PLOT DATE: 1/18/2011
DRAWN BY: STANTEC
CHECKED BY: STANTEC
SHEET 162 OF 306

1/18/2011 1:53:25 PM v:\1053\active\1053003_1092\highway\plotting\traffic sign summary.ptf

STATE OF VERMONT
AGENCY OF TRANSPORTATION

TRAFFIC SIGN SUMMARY SHEET 8

VAOT Metric

MILEMARKER, STATION, OR SIGN NUMBER	SIGN LEGEND	SIGN DIMENSIONS EA	WIDTH (mm)	HEIGHT (mm)	NEW & SALVAGED SIGNS "A"	"B"	SALV SIGN	SALV TIS	EXIST POST RETAIN	SALVAGE	NEW SIGN POSTS NO. OF POSTS	SQUARE STEEL (mm) 44 kg/m 2.8	50 kg/m 3.6	63 kg/m 5.0	ANCHOR	SLEEVE	TUBULAR ALUMINUM dia.(mm) 75 kg/m 1.9	100.0 kg/m 2.5	100 MOD kg/m 2.5	TUBULAR STEEL dia.(mm) FOUNDATION	75 kg/m 11.3	89 kg/m 13.4	100 kg/m 16.1	125 kg/m 21.8	W-SHAPE STEEL FTG. SIZE 600 mm	750 mm	WEIGHT	POST SIZE	SIGN FRAME REQUIRED	REMARKS	SIGN DETAIL DETAIL ON SHEET NUMBER	STD. SHEET NUMBER
STA. 4+113.9, LT.		1	750	750	0.56						1		4.2		1															W11-2 (FYG)		SHS
		1	600	300	0.18																									W16-7PL (FYG		SHS
STA. 4+115.4, LT.		1	750	750	0.56						1		4.2		1															W11-2 (FYG)		SHS
		1	600	300	0.18																									W16-7PL (FYG		SHS
STA. 4+120.2, RT.		1	600	750	0.45						1		4.2		1																	E-141
STA. 4+121.1, LT.		1	600	600	0.36						1		4.1		1															R3-2		SHS
SMITH ST.	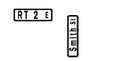	1	600	230	0.14																									INSTALL STREET SIGNS ABOVE ONE WAY SIGNS USING POST TOP MOUNTING BRACKET		E-123
		1	600	230	0.14																											E-123
STA. 5+015.1, LT.		1	900	300	0.27						2		8.9		2															R6-1L		SHS
		1	900	300	0.27																									MOUNT ONE WAY SIGNS BACK TO BACK R6-1R		SHS
		1	750	750	0.56																									R5-1		SHS
STA. 5+015.6, RT.		1	900	300	0.27						1		4.2		1															R6-1L		SHS
		1	900	300	0.27																									MOUNT ONE WAY SIGNS BACK TO BACK R6-1R		SHS
		1	750	750	0.56																									R5-1		SHS
STA. 5+019.4, LT.		1	750	750	0.56						1		4.2		1															R1-1		SHS
		1	150	250	0.04																											E-138
STA. 5+064.1, LT.		1	600	230	0.14						1		3.9		1																	E-123
		1	600	230	0.14																											
STA. 5+107.5, RT.	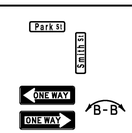	1	600	230	0.14						1		3.7		1															MOUNT ONE WAY SIGNS BACK TO BACK		E-123
		1	600	230	0.14																									R6-1L		E-123
		1	900	300	0.27																									R6-1R		SHS
		1	900	300	0.27																											SHS
												m 0	m 41.6	m 0		EA	kg	kg	kg		kg	kg	kg	kg								
SHEET TOTALS					m² 6.47	m²	EA.	m²				m 41.6					kg			EA.	kg				EA.	EA.	kg					

NOTES:

1. FINAL POST LENGTHS ARE TO BE DETERMINED IN THE FIELD. POST SIZES ARE COMPUTED BASED ON INFORMATION FURNISHED ON THE STANDARD SHEETS AND THE VTRANS "SIGN POST DESIGN GUIDELINE."
2. ALL OVERHEAD GUIDE SIGNS SHALL HAVE A MINIMUM TYPE IX LEGEND ON TYPE IX BACKGROUND. ALL GROUND MOUNTED GUIDE SIGNS SHALL HAVE A MINIMUM TYPE IX LEGEND ON TYPE III BACKGROUND. ALL CHEVRON SIGNS SHALL HAVE TYPE IX SHEETING. ALL OTHER GROUND MOUNTED SIGNS SHALL HAVE A MINIMUM TYPE III SHEETING.

FYG = FLUORESCENT YELLOW GREEN

Stantec

PROJECT NAME: DANVILLE
PROJECT NUMBER: F EGC 028-3(32)

FILE NAME: ...\traffic sign summary.ptf
DESIGN SUPERVISOR: GARY SANTY
DESIGNED BY: STANTEC
TRAFFIC SIGN SUMMARY SHEET TSS-8

PLOT DATE: 1/18/2011
DRAWN BY: STANTEC
CHECKED BY: STANTEC
SHEET 163 OF 306

V:\1953\active\053033.1082\highway\plotfiles\traffic sign summary.ptf
1:53:26 PM
1/18/2011

STATE OF VERMONT
AGENCY OF TRANSPORTATION

TRAFFIC SIGN SUMMARY SHEET 9

VAST Metric

MILEMARKER, STATION, OR SIGN NUMBER	SIGN LEGEND	SIGN DIMENSIONS EA	WIDTH (mm)	HEIGHT (mm)	NEW & SALVAGED SIGNS "A"	"B"	SALV SIGN	SALV TIS	EXIST POST RETAIN	EXIST POST SALVAGE	NEW SIGN POSTS NO. OF POSTS	SQUARE STEEL (mm) 44 kg/m 2.8	50 kg/m 3.6	63 kg/m 5.0	ANCHOR	SLEEVE	TUBULAR ALUMINUM dia.(mm) 75 kg/m 1.9	100.0 kg/m 2.5	100 MOD kg/m 2.5	TUBULAR STEEL dia.(mm) FOUNDATION	75 kg/m 11.3	89 kg/m 13.4	100 kg/m 16.1	125 kg/m 21.8	W-SHAPE STEEL FTG. SIZE 600 mm	750 mm	WEIGHT	POST SIZE	SIGN REFRAMED REQUIRED	REMARKS	SIGN DETAIL DETAIL ON SHEET NUMBER	STD. SHEET NUMBER
HIGHLAND AVE.	RT 2 E; Highland Ave	1	600	230	0.14						2		8.7		2																	E-123
		1	750	230	0.17																											E-123
STA. 6+012.5, LT.	STOP	1	750	750	0.56																										INSTALL STREET SIGNS ABOVE STOP SIGN USING POST TOP MOUNTING BRACKET R1-1		SHS
STA. 6+016.3, RT.	T HWY 114; LEGAL LOAD LIMIT 24,000 POUNDS; SPEED LIMIT 25	1	650	750	0.45		1				2		9.6		2																R2-1 (25)		SHS
		1	600	750	0.45																											E-141
MOUNTAIN VIEW DR.	RT 2 E; Mountain View Dr	1	600	230	0.14						2		8.5		2																	E-123
		1	900	230	0.21																											E-123
STA. 7+012.3, LT.	STOP	1	750	750	0.56																										INSTALL STREET SIGNS ABOVE STOP SIGN USING POST TOP MOUNTING BRACKET R1-1		SHS
STA. 7+012.3, RT.	LEGAL LOAD LIMIT 24,000 POUNDS	1	600	750	0.45						1		3.8		1																	E-141
	TSSS 1 TOTALS				6.42	0	3					6.8	52.3	8.7 (NP)																			
	TSSS 2 TOTALS				7.51	0	1				2	0	64.9	0																			
					2.16 (NP)	0	1 (NP)					0	0	8.7 (NP)																			
	TSSS 3 TOTALS				6.79	3.96	1				1	0	43.5	0					27.0													
	TSSS 4 TOTALS				7.35	2.84	0					0	64.7	0			18.2															
	TSSS 5 TOTALS				5.72	0	0					3.4	51.2	0																			
					0	0	3 (NP)						0	8.7 (NP)																			
	TSSS 6 TOTALS				7.24	0	1					0	54.3	0																			
	TSSS 7 TOTALS				6.47	0	0					0	53.4	0																			
	TSSS 8 TOTALS				6.47	0	0					0	41.6	0																			
	TSSS 9 TOTALS				3.13	0	1					0	30.6	0																			
	SUBTOTALS				57.1	6.8	10					10.2	456.5	0			18.2	27.0															
	ROUNDING				0.9	0.2	0					0.8	0.5	0			0.8	0															
	TOTALS				58	7	10					11	457	0			19	27															
	NON-PARTICIPATING SUBTOTALS				2.16	0	4				3	0	0	26.1																			
	NON-PARTICIPATING ROUNDING				0.84	0	0				0	0	0	0.9																			
	NON-PARTICIPATING TOTALS				3	0	4				3	0	0	27																			
	SHEET TOTALS				m^2	m^2	EA.	m^2				m	m	m		EA	kg	kg	kg		kg	kg	kg	kg	EA.	EA.	kg					

NOTES;

1. FINAL POST LENGTHS ARE TO BE DETERMINED IN THE FIELD. POST SIZES ARE COMPUTED BASED ON INFORMATION FURNISHED ON THE STANDARD SHEETS AND THE VTRANS 'SIGN POST DESIGN GUIDELINE.'
2. ALL OVERHEAD GUIDE SIGNS SHALL HAVE A MINIMUM TYPE IX LEGEND ON TYPE IX BACKGROUND. ALL GROUND MOUNTED GUIDE SIGNS SHALL HAVE A MINIMUM TYPE IX LEGEND ON TYPE III BACKGROUND. ALL CHEVRON SIGNS SHALL HAVE TYPE IX SHEETING. ALL OTHER GROUND MOUNTED SIGNS SHALL HAVE A MINIMUM TYPE III SHEETING.

FYG = FLUORESCENT YELLOW GREEN

PROJECT NAME: DANVILLE
PROJECT NUMBER: F EGC 028-3(32)

FILE NAME: ...\traffic sign summary.ptf
DESIGN SUPERVISOR: GARY SANTY
DESIGNED BY: STANTEC
TRAFFIC SIGN SUMMARY SHEET TSS-9

PLOT DATE: 1/18/2011
DRAWN BY: STANTEC
CHECKED BY: STANTEC
SHEET 164 OF 306

Stantec

1/18/2011 1:53:27 PM v:\0953\active\053003.1092\highway\plotfiles\traffic sign summary.ptf

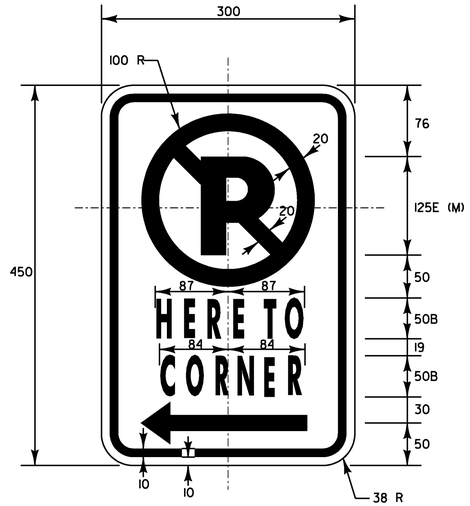

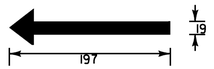

RED (REFL.) LEGEND, BORDER AND ARROW
WHITE (REFL.) BACKGROUND
BLACK "P"
SEE VTrans STANDARD E-143 FOR MATERIALS

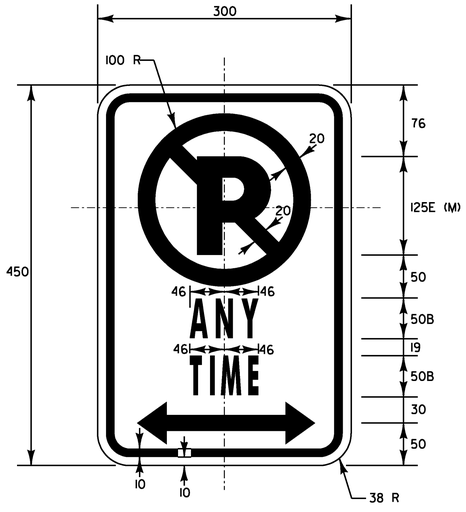

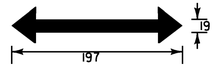

RED (REFL.) LEGEND, BORDER AND ARROW
WHITE (REFL.) BACKGROUND
BLACK "P"
SEE VTrans STANDARD E-143 FOR MATERIALS

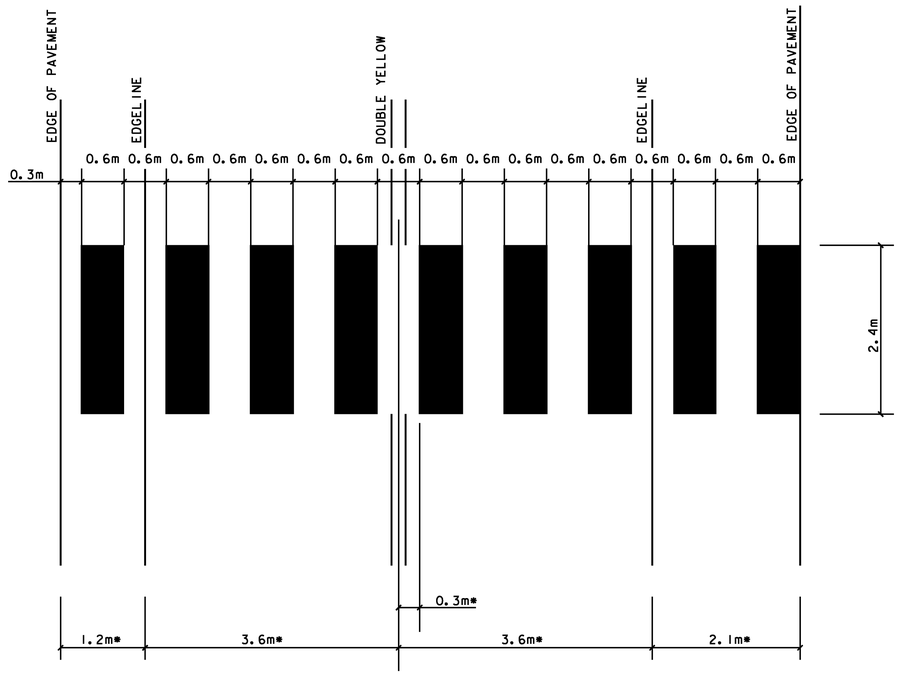

*ADJUST SPACING (0.3m - 0.6m) TO AVOID WHEEL PATHS

BLOCK PATTERN CROSSWALK DETAIL

NOT TO SCALE

PROJECT NAME: DANVILLE	
PROJECT NUMBER: F EGC 028-3(32)	
FILE NAME: ...\Signing Detail Sheet sgd_1.ptf	PLOT DATE: 1/18/2011
DESIGN SUPERVISOR: GARY SANTY	DRAWN BY: STANTEC
DESIGNED BY: STANTEC	CHECKED BY: STANTEC
SIGNING DETAIL SHEET SGD-1	SHEET 165 OF 306

Stantec

1/8/2011 1:53:29 PM v:\1953\active\195300033.092\highway\plotfiles\Signing Detail Sheet sgd_1.ptf

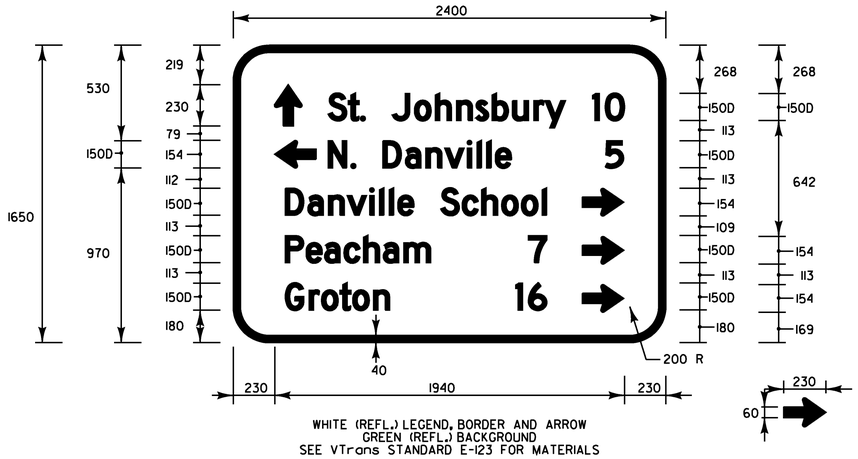

WHITE (REFL.) LEGEND, BORDER AND ARROW
GREEN (REFL.) BACKGROUND
SEE VTrans STANDARD E-123 FOR MATERIALS

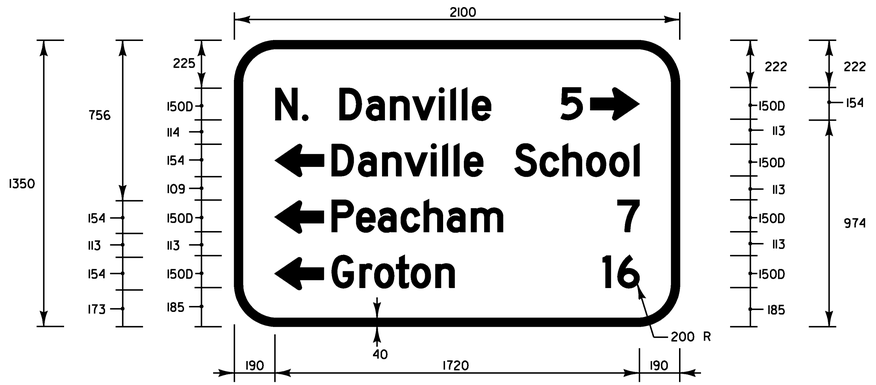

WHITE (REFL.) LEGEND, BORDER AND ARROW
GREEN (REFL.) BACKGROUND
SEE VTrans STANDARD E-123 FOR MATERIALS

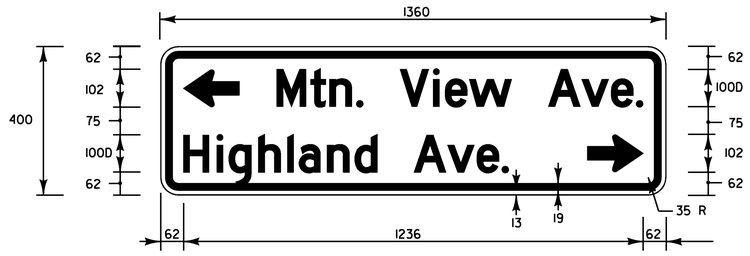

YELLOW (REFL.) LEGEND, BORDER AND ARROW
BLACK (REFL.) BACKGROUND
SEE VTrans STANDARD E-123 FOR MATERIALS

PROJECT NAME:	DANVILLE
PROJECT NUMBER:	F EGC 028-3(32)
FILE NAME: ...\Signing Detail Sheet sgd_2.ptf	PLOT DATE: 1/18/2011
DESIGN SUPERVISOR: GARY SANTY	DRAWN BY: STANTEC
DESIGNED BY: STANTEC	CHECKED BY: STANTEC
SIGNING DETAIL SHEET SGD-2	SHEET 166 OF 306

Stantec

1/18/2011 11:53:30 PM v:\1953\active\195300033.1092\highway\PlotFiles\Signing Detail Sheet sgd_2.ptf

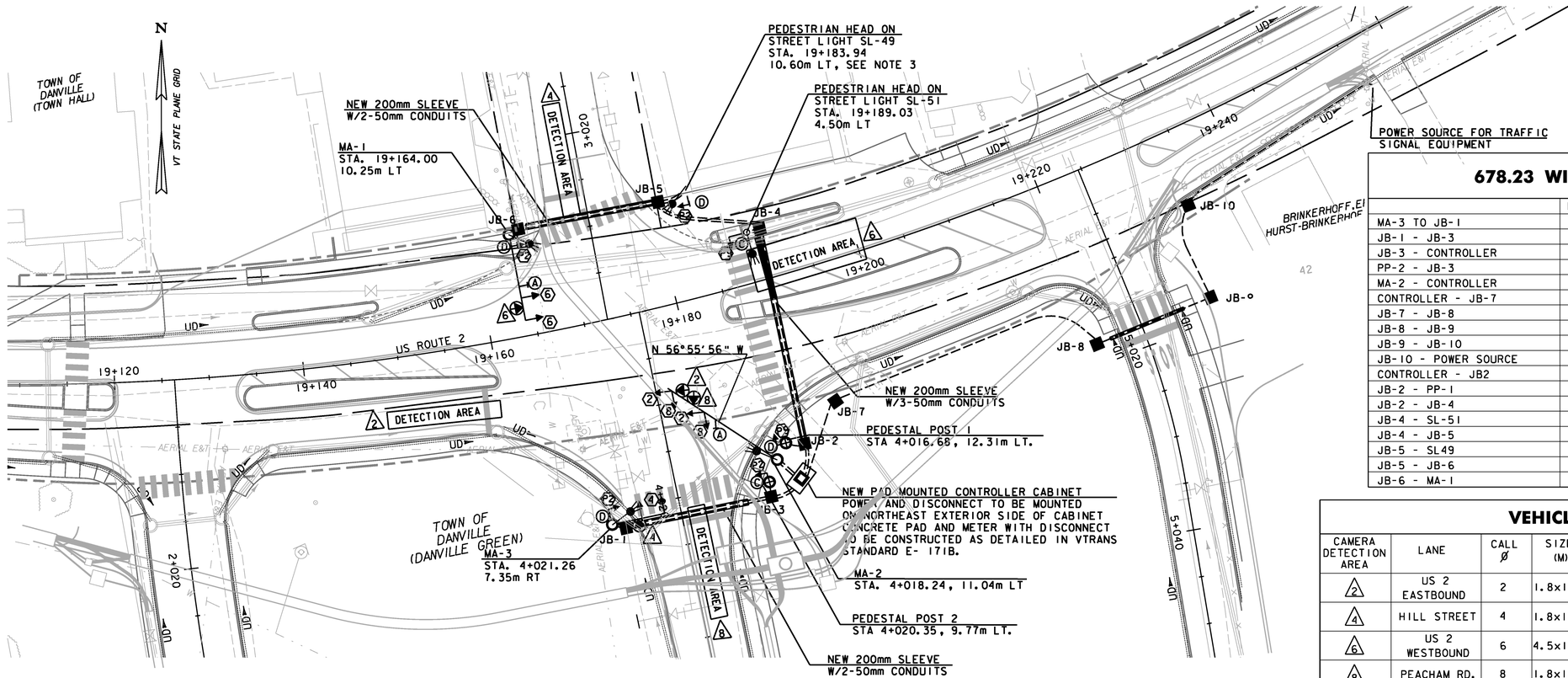

Metric

678.23 WIRED CONDUIT

	NO.	DIA.	REMARKS
MA-3 TO JB-1	1	50mm	SIGNAL & VIDEO
JB-1 - JB-3	2	50mm	SIGNAL & VIDEO
JB-3 - CONTROLLER	2	50mm	SIGNAL & VIDEO
PP-2 - JB-3	1	50mm	SIGNAL
MA-2 - CONTROLLER	2	50mm	SIGNAL & VIDEO
CONTROLLER - JB-7	1	50mm	POWER
JB-7 - JB-8	1	50mm	POWER
JB-8 - JB-9	1	50mm	POWER
JB-9 - JB-10	1	50mm	POWER
JB-10 - POWER SOURCE	1	50mm	POWER
CONTROLLER - JB2	2	50mm	SIGNAL & VIDEO
JB-2 - PP-1	1	50mm	SIGNAL
JB-2 - JB-4	2	50mm	SIGNAL & VIDEO & LIGHTING
JB-4 - SL-51	2	50mm	SIGNAL
JB-4 - JB-5	2	50mm	SIGNAL & VIDEO & LIGHTING
JB-5 - SL49	2	50mm	SIGNAL & VIDEO & LIGHTING
JB-5 - JB-6	2	50mm	SIGNAL & VIDEO
JB-6 - MA-1	2	50mm	SIGNAL & VIDEO

VEHICLE DETECTORS

CAMERA DETECTION AREA	LANE	CALL Ø	SIZE (M)	TYPE	PULSE OR PRESENCE	DELAY	LOCKING MEMORY
2	US 2 EASTBOUND	2	1.8x12.0	OPTICAL	PRESENCE		NO
4	HILL STREET	4	1.8x12.0	OPTICAL	PRESENCE	5 SEC	NO
6	US 2 WESTBOUND	6	4.5x12.0	OPTICAL	PRESENCE		NO
8	PEACHAM RD.	8	1.8x12.0	OPTICAL	PRESENCE	5 SEC	NO

LEGEND

EXISTING	NEW	DISCRIPTION
		UTILITY POLE
		LUMINAIRE
		LIGHT OR WOOD POLE
		STRAIN POLE/CANTILEVER
		CONTROLLER CABINET
		PULLBOX/JUNCTION BOX
		SIGNAL HEAD
— EX —	— — —	CONDUIT
		PEDESTAL POST
		CONDUIT SLEEVE
	DETECTION AREA	VIDEO DETECTION AREA
		VIDEO DETECTION CAMERA

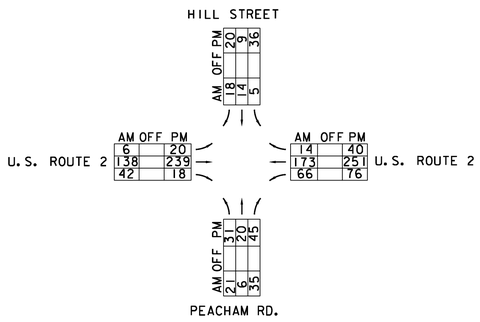

2011 "AVERAGE WEEKDAY" HOURLY VOLUMES

678.25 PULL BOX, STANDARD

LOCATION AND DESCRIPTION
4+022.02, 6.04m RT JB-1
4+022.44, 8.67m LT JB-3
19+190.55, 5.36m LT JB-4
19+180.66, 10.86m LT JB-5
19+165.08, 11.17m LT JB-6
19+193.10, 14.36m RT JB-7
19+219.68, 17.73m RT JB-8
19+231.87, 17.85m RT JB-9
19+233.67, 8.02m RT JB-10

678.30 ELECTRICAL CONDUIT SLEEVE

LOCATION	DIAM.
HILL STREET 3+011.21, 6.59m LT - 3+011.19, 6.91m RT	200 mm
US ROUTE 2 19+190.45, 4.70m LT - 19+189.02, 17.19m RT	200 mm
PEACHAM ROAD 4+021.87, 5.42m RT - 4+021.94, 7.13m LT	200 mm
SMITH STREET 5+017.69, 4.80m LT - 5+017.78, 3.60m RT USE STREET LIGHT SLEEVE	N/A

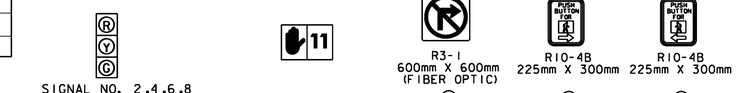

SIGNAL FACE ARRANGEMENT

SIGN DETAILS

NEMA PHASING CHART

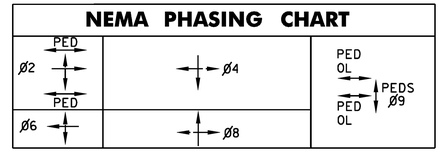

TIME OF DAY PROGRAMMING

TIME OF DAY	DAY	MODE / PROGRAM FREE	COORD	FLASH	MAXIMUM GREEN MAX I	MAX II	MAX III
0000 - 0600	M-F,S-S	ON			ON		
0600 - 0900	M-F,S-S	ON			ON		
0900 - 1500	M-F,S-S	ON			ON		
1500 - 1800	M-F,S-S	ON			ON		
1800 - 2200	M-F,S-S	ON			ON		
2200 - 0000	M-F,S-S	ON			ON		

CONTROLLER TIMINGS (SECONDS)

PHASES	MIN GREEN	EXTENSION	YELLOW	RED	MAX I	WALK	FDW	DW
Ø2+Ø6	15	2	4	2	30	9	10	2
Ø4+Ø8	5	2	4	2	20	-	-	-
Ø9	-	-	-	-	-	7	16	2

NOTES:

1. MAST ARM AND PEDESTRIAN SIGNAL FOUNDATIONS ARE TO BE PLACED WITHIN 1.5m OF ACCESS RAMP AND WITHIN A 600 mm REACH FROM A LEVEL AREA TO POSITION PEDESTRIAN SIGNAL CALL BUTTONS STATIONING, AND OFFSET OF MAST ARM POLES/ FOUNDATIONS MAY CHANGE SLIGHTLY FROM PLANS TO ALLOW THIS. CHANGES FROM LOCATIONS SHOWN ON PLANS MUST BE APPROVED BY THE ENGINEER.
2. VIDEO DETECTION SYSTEM SHALL BE PAID UNDER ITEM 678.15
3. ACCESSIBLE PEDESTRIAN ACCESS SHALL BE PROVIDED TO PUSH BUTTON FOR PEDESTRIAN HEAD.

REPLACEMENT SHEETS ISSUED 02/24/2012

0 10 20
SCALE 1:250

Stantec

PROJECT NAME: DANVILLE
PROJECT NUMBER: F EGC 028-3(32)

FILE NAME: ...\PlotFiles\TSigPlan-01.ptf
DESIGN SUPERVISOR: GARY SANTY
DESIGNED BY: DAVID DEBAIE
TRAFFIC SIGNAL DETAIL TSD-1
PLOT DATE: 2/24/2012
DRAWN BY: STANTEC
CHECKED BY: STANTEC
SHEET 167 OF 306

2/24/2012 4:30:02 PM V:\1953\active\61953003.0092\Highway\PlotFiles\TSigPlan-01.ptf

DESIGN CRITERIA

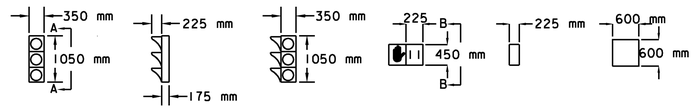

FRONT SECTION A-A FRONT SECTION B-B FRONT

	VEHICLE SIGNALS 1-WAY 3-SECTION	VEHICLE SIGNALS 2-WAY 6-SECTION	PED SIGNALS	SIGN
DEAD LOAD	* 23 kg	* 43 kg	13 kg	4 kg
ICE LOAD	* 21 kg	* 39 kg	12 kg	11 kg

* SIGNALS ADD 3 kg DEAD LOAD AND 17 kg ICE LOAD FOR REQUIRED BACKPLATE
** ALL SIGNAL ADD 5 kg DEAD LOAD AND 23 kg ICE LOAD FOR REQUIRED BACKPLATE
NOTE: ALL DIMENSIONS AND WEIGHTS ARE APPROXIMATE AND MAY VARY BY MANUFACTURER

CONTROLLER IDENTIFICATION PLAQUE

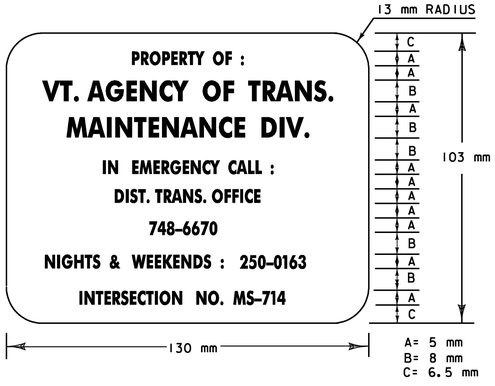

LEGEND: - BLACK (NON-REFL.) - STAMPED PRIOR TO PAINTING
BACKGROUND: NATURAL ALUMINUM OR BRASS SURFACE

NOTES:

1. THE PLAQUE SHALL BE MOUNTED ON ALL TRAFFIC SIGNAL CONTROLLER CABINETS. IT SHALL BE FASTENED TO THE CONTROLLER CABINET IN SUCH A MANNER AS TO BE NOT EASILY REMOVED, SUCH AS WELDED, RIVETED OR BOLTED WITH VANDAL PROOF BOLTS.
2. THE LETTERS SHALL BE PUNCHED OR STAMPED, OR ENGRAVED, SUCH STAMPING SHALL PENETRATE AT LEAST 1/2 THE BASE MATERIAL THICKNESS.
3. THE BASE MATERIAL FOR THE PLAQUE SHALL BE BRASS OR ALUMINUM WITH A MINIMUM THICKNESS OF 3 mm.

LIST OF MAJOR EQUIPMENT (ITEM 678.15)

EQUIPMENT			TOTALS
MAST ARMS			3
NEW 305 mm SIGNAL HEADS W/TUNNEL VISORS AND MOUNTING HARDWARE			
MAST ARM MOUNTED	ONE-WAY	3 SECTION (ALL HAVE BACKPLATES)	4
	TWO WAY	3 SECTION (ALL HAVE BACKPLATES)	2
ECONOLITE ASC/3-2100 OR NAZTEC MODEL 980 CONTROLLER IN A GROUND MOUNTED 55" P44 CABINET WITH BASE EXTENSION			1
METER AND DISCONNECT ON CONTROLLER CABINET			1
MISCELLANEOUS EQUIPMENT, HARDWARE, ETC. TO COMPLETE INSTALLATION			
PEDESTRIAN POSTS			2
ADA PEDESTRIAN PUSH BUTTON / SIGN ASSEMBLY			6
WALK / DON'T WALK PEDESTRIAN HEADS (SINGLE FACE, SYMBOLIC TYPE W/150 mm SYMBOLS AND COUNTDOWN INDICATION) WITH RELATED MOUNTING HARDWARE:			
PED. POST MOUNTED			2
SIGNAL POLE MOUNTED			2
STREET LIGHT POLE MOUNTED			2
LED N.R.T.O.R. LIGHTED SIGN			2
VIDEO DETECTION CAMERAS (WITH ANCILLARY EQUIPMENT)			4

NOTES:

1. CONSTRACTOR SHALL PROVIDE ALL MISC EQUPIMENT, HARDWARE, ECT. TO COMPLETE INSTALLATION TO PROVIDE FOR A FULLY FUNCTIONAL SYSTEM.
2. PEDESTRIAN SIGNALS TO BE ACCESSIBLE PEDESTRIAN SIGNALS PER SECTION 678 AND SUBSECTIONS 752.13 AND 752.14.

Stantec

PROJECT NAME: DANVILLE
PROJECT NUMBER: F EGC 028-3(32)

FILE NAME: ...\PlotFiles\TSIgDet-01.ptf
DESIGN SUPERVISOR: GARY SANTY
DESIGNED BY: STANTEC
TRAFFIC SIGNAL DETAIL TSD-2
PLOT DATE: 1/18/2011
DRAWN BY: STANTEC
CHECKED BY: STANTEC
SHEET 168 OF 306

1/18/2011 11:53:35 PM v:\953\active\95300033.0192\highway\PlotFiles\TSIgDet-01.ptf

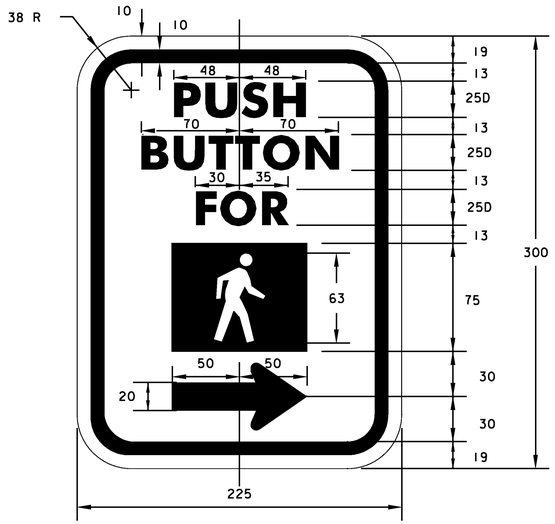

* SEE VAOT STD. E-152 FOR PEDESTRIAN SYMBOL DESIGN
** VARIABLE LEGEND AS FOLLOWS:
A) RIGHT FACING FIGURE & ARROW
B) LEFT FACING FIGURE & ARROW

SEE VAOT STD. E-140 FOR COLORS, MATERIALS, SPECIFICATIONS AND TEXT DESIGN.

SPECIFIC COLORS
LEGEND - BLACK (NON-REFL.)
BACKGROUND - WHITE (REFL.)
SYMBOL - WHITE (REFL.)

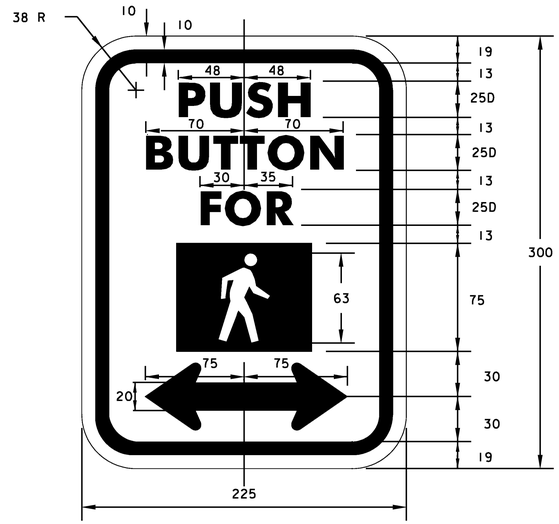

NOTE:
1. PEDESTRIAN SIGNS SHALL BE INCIDENTAL TO ITEM 678.15.

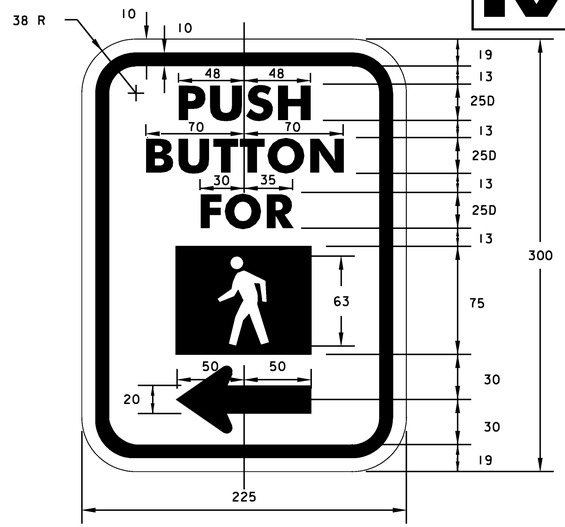

TRAFFIC CONTROL NOTES

1. DURING CONSTRUCTION A MINIMUM OF ONE-WAY TRAFFIC SHALL BE MAINTAINED AT ALL TIMES. TWO-WAY TRAFFIC SHALL BE MAINTAINED AT NIGHT, ON WEEKENDS AND HOLIDAYS, DURING PEAK TRAFFIC AND WHENEVER POSSIBLE DURING CONSTRUCTION. AT THE DISCRETION OF THE RESIDENT ENGINEER (OR OTHER DESIGNATED TOWN REPRESENTATIVE), UNIFORMED TRAFFIC CONTROL OFFICERS SHALL DIRECT TRAFFIC, AND TRAINED FLAGPERSONS SHALL STOP AND RELEASE TRAFFIC, WHENEVER REQUIRED.

2. TRAFFIC CONTROL SIGNING AND CHANNELIZING DEVICES SHALL BE IN ACCORDANCE WITH THE APPROPRIATE STANDARD DRAWINGS AND THE MUTCD. (E-101, E-102, E-106, E-107, E-110, E-111)

3. AFTER SIGNAL INSTALLATION, ALL HEADS MUST BE COVERED (TURNING SHALL NOT BE ALLOWED) UNTIL TURNED ON. THE METHOD OF COVERING SHALL BE AS FOLLOWS:

ALL NEW TRAFFIC AND PEDESTRIAN SIGNAL HEADS WHICH HAVE BEEN INSTALLED BUT NOT PLACED IN EITHER FLASHING OR FULL OPERATION SHALL BE COVERED. EXISTING SIGNAL HEADS WHICH ARE PLACED OUT OF SERVICE IN ORDER TO PERFORM WORK ON THE SIGNAL SYSTEM SHALL ALSO BE COVERED. EXCEPT WHEN SUCH WORK CAN BE COMPLETED IN A RELATIVELY SHORT PERIOD OF TIME (SEVERAL HOURS) AND TRAFFIC CONTROL HAS BEEN PROVIDED FOR.

THE SIGNAL COVERS SHALL CONSIST OF A ONE PIECE PLASTIC BAG HAVING A MINIMUM THICKNESS OF 4 MIL. THE BAG SHALL BE OPAQUE. THE COVER SHALL LIP OVER THE ENTIRE SIGNAL HEAD AND SHALL BE SECURELY TIED AT THE OPENING WITH A ROPE OF SUFFICIENT SIZE AND STRENGTH TO SECURE THE COVER. AN INTERMEDIATE ROPE OF THE SAME MATERIAL SHALL BE DRAWN AROUND THE CENTER OF THE COVER TO PREVENT EXCESS FLAPPING IN THE WIND.

A DRAIN HOLE SHALL BE MADE AT THE BOTTOM OF THE BAG TO ALLOW THE ESCAPE OF MOISTURE. NO TAPE OR ADHESIVE WILL BE ALLOWED TO BE ATTACHED TO ANY SURFACE OF THE SIGNAL HOUSING OR LENSES. ALL COVERS SHALL BE PLACED IN A NEAT MANNER. ANY COVER WHICH IS TORN OR MISSING SHALL BE IMMEDIATELY REPLACED. PAYMENT FOR THE COVERS, THEIR PLACEMENT, AND REMOVAL AN ALL INCIDENTALS FOR COMPLETION OF THE WORK SHALL BE CONSIDERED INCIDENTAL TO THE INSTALLATION OF THE TRAFFIC SIGNAL.

4. WHERE TWO WAY TRAFFIC IS MAINTAINED DURING CONSTRUCTION, THE SIGN PACKAGE SHOWN ON STD E-100 SHOULD BE USED. FOR ONE-WAY TRAFFIC, E-110 APPLIES. APPROACH CONSTRUCTION SIGNING SHALL REMAIN IN PLACE DURING THE ENTIRE CONSTRUCTION PERIOD. OTHER SIGNING SHALL BE REMOVED OR COVERED WHEN NOT APPLICABLE.

5. VARIATIONS IN THE SIGNING PACKAGES MAY BE DICTATED BY UNIQUE GEOMETRY AND/OR TRAFFIC CONDITIONS.

6. THE CONTRACTOR SHALL NOT WORK WITHIN THE HIGHWAY R.O.W. WITHOUT THE APPROPRIATE CONSTRUCTION SIGNING IN PLACE AS SHOWN ON STD E-100.

7. "SIGNAL UNDER CONSTRUCTION" SIGN PANELS SHALL BE MOUNTED UNDER "ROAD WORK AHEAD" SIGNS ANYTIME SIGNAL SYSTEM WORK IS BEING PERFORMED.

A. NEW EQUIPMENT

1a. TRAFFIC SIGNAL HEADS
UNLESS OTHERWISE NOTED ON PLANS, ALL TRAFFIC SIGNAL HEADS SHALL HAVE 300 mm LED INDICATIONS WITH A VISIBLE BEAM SPREAD OF 80 DEGREES OF AXIS. A GASKET SHALL BE SUPPLIED WITH EACH SECTION TO MOUNT THE LED LAMP. SIGNAL HEADS SHALL BE OPTICALLY PROGRAMMED. AERIAL SIGNALS MOUNTED MORE THAN 4.5m ABOVE GROUND LEVEL SHALL HAVE POLYCARBONATE VISORS AND BODIES, SIGNALS MOUNTED LESS THAN 7.5 M ABOVE GROUND LEVEL SHALL HAVE ALUMINUM VISORS AND BODIES. ALL HOUSING AND VISORS SHALL HAVE A FLAT BLACK FINISH. ALL INCIDENTAL HARDWARE FOR SIGNAL HEAD SHALL BE FLAT BLACK. ALL CANTILEVER MOUNTED SIGNAL HEADS SHALL BE RIGIDLY MOUNTED.

1b. PEDESTRIAN SIGNAL HEADS
HEADS SHALL BE LED TYPE. THE PEDESTRIAN SIGNAL SHALL BE CAPABLE OF DISPLAYING BRIGHTLY AND UNIFORMLY, THE ALTERNATE SYMBOL MESSAGES "HAND" IN PORTLAND ORANGE AND "WALKING PERSON" IN WHITE. THE GENERAL CONSTRUCTION OF THE PEDESTRIAN SIGNAL SHALL INCLUDE A SINGLE PIECE CAST ALUMINUM HOUSING, A SINGLE PIECE DOUBLE PARABOLIC REFLECTOR, A TWO SYMBOL TWO COLOR MESSAGE LENS, A SECOND LENS FOR THE COUNTDOWN MESSAGE, AND SUN VISOR. POLE MOUNTED PEDESTRIAN SIGNALS SHALL BE MOUNTED AS SHOWN ON VTRANS STANDARD E-171B. PEDESTAL POLE MOUNTING SHALL BE AS SHOWN ON VTrans STANDARD E-170.

2. PULLBOXES AND JUNCTION BOXES

a. PULLBOXES AND JUNCTION BOXES ARE DETAILED ON VTrans STANDARD SHEET E-173.

b. ALL SPLICES IN PULLBOXES/JUNCTION BOXES SHALL BE SOLDERED AND SEALED IN A WATERPROOF WELL SPLICE KIT. PAYMENT INCIDENTAL TO OTHER ITEMS.

c. THE LOGO ON PULLBOXES/JUNCTION BOXES SHALL BE "SIGNAL"

3. TRAFFIC SIGNAL CONTROLLER & CABINET

a. EACH UNIT SHALL BE MANUFACTURED BY ECONOLITE CONTROL PRODUCTS, INC. OR NAZTEC, INC. GROUND MOUNTED CABINET SHALL BE TYPE P. EACH PHASE (USED OR NOT USED) SHALL HAVE A LOAD SWITCH AND ALL NECESSARY FLASH TRANSFER RELAYS. EACH INSTALLATION SHALL INCLUDE TIME CLOCKS WITH BATTERY BACKUP, MINIMUM 12 CHANNEL MMM WITH STOP TIMING FUNCTION, LED DISPLAY LOAD SWITCHES (INPUT SIDE), REMOTE FLASHER, VEHICLE DETECTOR AMPLIFIERS, UNIFORM CODE FLASH UNIT (PER MUTCD), RADIO INTERFERENCE FILTERS, SURGE PROTECTION, LAMP RECEPTACLE AND CONVENIENCE OUTLET WITH GROUND FAULT INTERRUPTION. ALL CONTROLLERS SHALL HAVE ALL NECESSARY HARDWARE & SOFTWARE FOR TIME-BASED COORDINATION (BACKUP), HARDWARE COORDINATION (PRIMARY), & PREEMPTION. EACH SYSTEM SHALL BE GROUND MOUNTED IN A PREWIRED CABINET WITH A POLICE DOOR HAVING STANDARD SWITCHES (MAIN ON/OFF, SIGNAL ON/OFF AND FLASH). THERE SHALL BE A WATERPROOF PLASTIC ENVELOPE ATTACHED TO THE CABINET INTERIOR FOR STORAGE OF THE CONTROLLER MANUAL AND PLAN SHEETS.
THE CONTROLLERS/TBC SHALL BE SHIPPED FROM THE MANUFACTURER PRESET AND A REPRESENTATIVE OF THE MANUFACTURER SHALL BE ON THE PROJECT SITE FOR TURN ON OF THE UNITS. IN ADDITION TO EQUIPMENT FURNISHED TO PROVIDE A FUNCTIONAL SIGNAL SYSTEM, THE CONTRACTOR SHALL SUPPLY SPARE PARTS AS LISTED IN THE STANDARD SPECIFICATIONS. THIS EQUIPMENT MAY BE USED DURING THE CONSTRUCTION PERIOD TO REPLACE MALFUNCTIONING EQUIPMENT BUT MUST BE REPLACED OR MAINTAINED IN THE CABINET PRIOR TO COMPLETION. THE CONTROLLER CABINET(S) SHALL BE ALUMINUM WITH A FACTORY APPLIED FLAT BLACK FINISH AND BE PROVIDED WITH A STANDARD #2 CORBIN LOCK AND A STANDARD POLICE DOOR LOCK. EACH LOCK SHALL HAVE KEYS. EACH CABINET WILL HAVE A MINIMUM OF TWO TWO SPARE LOAD SWITCH POSITIONS. EACH CABINET SHALL INCLUDE A 120 DEGREE - 170 DEGREE FAN/THERMOSTAT (INITIALLY SET AT 120 DEGREES). THE CABINET DOOR SHALL BE SUPPLIED WITH TEST SWITCHES FOR EACH PHASE. ANY DOOR MOUNTED TOGGLE SHALL BE PROTECTED FROM ACCIDENTAL BUMPING. A MAIN DISCONNECT BREAKER SHALL BE INSTALLED IN A RAIN TIGHT LOCKED CABINET EXTERNAL TO THE CONTROLLER. ALL LOAD SWITCHES SHALL BE LABELED ON THE CABINET WALL.

Stantec

PROJECT NAME: DANVILLE
PROJECT NUMBER: F EGC 028-3(32)

FILE NAME: ...\PlotFiles\TSIgDet-02.ptf
DESIGN SUPERVISOR: GARY SANTY
DESIGNED BY: STANTEC
TRAFFIC SIGNAL DETAIL TSD-3

PLOT DATE: 1/18/2011
DRAWN BY: STANTEC
CHECKED BY: STANTEC
SHEET 169 OF 306

1/18/2011 1:53:37 PM v:\1953\active\81953033.0092\Highway\PlotFiles\TSIgDet-02.ptf

TRAFFIC SIGNAL SYSTEM GENERAL NOTES

A. NEW EQUIPMENT

4. TRAFFIC SIGNAL CONDUIT & SLEEVES

   a. ALL TRAFFIC SIGNAL CONDUIT SHALL BE 50 mm DIAMETER OR LARGER AS REQUIRED BY THE ELECTRICAL CODE. PAYMENT SHALL BE UNDER ITEM 678.23 WIRED CONDUIT. SEE VTrans STANDARD E-172 AND SPECIFICATION SUBSECTION 678.09 FOR ADDITIONAL INFORMATION.

   b. CONDUIT PLACED UNDER ROADS SHALL BE ENCASED IN SCHEDULE 80 PVC SLEEVE AS SHOWN ON PLANS. MINIMUM SLEEVE DIAMETER SHALL BE 150 mm. PAY AS VTrans ITEM 678.30 ELECTRICAL CONDUIT SLEEVE. SEE VTrans STANDARD SPECIFICATION 678.30 FOR ADDITIONAL INFORMATION.

   c. OPEN CUT TRENCH EXCAVATION FOR BITUMINOUS CONCRETE PAVEMENT REQUIRED TO PLACE PVC ELECTRICAL CONDUIT SLEEVE SHALL BE PERFORMED USING VTrans STANDARD SHEET D-20. A SAWCUT SHALL BE PERFORMED IN THE EXISTING PAVEMENT SURFACE PRIOR TO EXCAVATION PAYMENT WILL BE CONSIDERED INCIDENTAL TO ITEM 678.30. BACKFILL INCIDENTAL TO ITEM 678.30. BACKFILL & PAVEMENT TO MATCH RESPECTIVE EXISTING MATERIALS AS SPECIFIED BY RESIDENT ENGINEER.

   d. THE MINIMUM DEPTH BELOW THE ROADWAY SURFACE FOR THE PLACEMENT OF ELECTRICAL CONDUIT SLEEVES SHALL BE 1.5 m. THE MINIMUM DEPTH BELOW FINISHED GRADE FOR ELECTRICAL CONDUIT SHALL BE 0.6 M.

   e. 150 mm WIDE RED PLASTIC MARKING TAPE SHALL BE PLACED IN THE EXCAVATED TRENCH 150 mm to 300 mm INCHES BELOW THE FINISHED GRADE FOR ALL CONDUIT AND SLEEVE RUNS EXCEPT THOSE BORED UNDER ROADWAY, PAYMENT INCIDENTAL TO THE CONDUIT OR SLEEVE.

   f. VEHICLE LOOP DETECTORS - SEE VTrans STANDARD E-172. LOOPS SHALL EXTEND 1.2 m AHEAD OF STOP BAR UNLESS OTHERWISE NOTED ON THE PLANS.

5. ALL EQUIPMENT SHALL MEET OR EXCEED NEMA STANDARDS AND IMSA OR ITE SPECIFICATIONS, WHERE APPLICABLE.

6. NEW STRAIN POLES & CANTILEVERS SHALL BE DESIGNED USING THE LATEST VERSION OF AASHTO'S "STANDARD SPECIFICATIONS FOR STRUCTURAL SUPPORTS FOR HIGHWAY SIGNS, LUMINARIES AND TRAFFIC SIGNALS". SEE POLE AND FOOTING DETAIL SHEETS. DIAMETER, HEIGHT, YIELD STRENGTH AND GAGE SHALL BE STAMPED ON THE POLE BASE PLATE OR ON AN ATTACHED METAL TAG. CANTILEVER TAGS SHALL INDICATE BOTH UPRIGHT AND ARM DATA. THE STRAIN POLES AND ALL CANTILEVERS SHALL HAVE A FLAT BLACK FINISH.

7. ALL PEDESTRIAN PUSH BUTTONS SHALL COMPLY WITH ADA STANDARDS.

B. REMOVAL OF EXISTING OR REUSE OF SALVAGED EQUIPMENT

1. ALL REMOVED AND NOT REUSED EQUIPMENT (HEADS, CONTROLLERS, CABINETS, POLES, ETC.) SHALL BE RETURNED TO VTrans. EQUIPMENT SHALL BE RETURNED TO VTRANS WITHIN 48 HOURS OF ITS REMOVAL. CONTRACTOR SHALL COORDINATE WITH VTRANS TO ASSURE REPRESENTATIVE IS AVAILABLE TO RECEIVE EQUIPMENT. (SEE SPECIAL PROVISIONS FOR ADDITIONAL DELIVERY DETAILS).

2. REMOVAL OF EQUIPMENT SHALL INCLUDE REMOVAL OF CONCRETE BASES (DISPOSAL BY CONTRACTOR) AND BACKFILL OF THE HOLES,TO A POINT 300 mm BELOW GRADE WITH MATERIAL SIMILAR TO EXISTING SOIL WHERE APPLICABLE. ANY EQUIPMENT THAT IS DAMAGED BY THE CONTRACTOR DURING REMOVAL SHALL BE REPAIRED, OR REPLACED, TO THE SATISFACTION OF THE STATE AT THE CONTRACTOR'S EXPENSE. ANY EQUIPMENT NOT WANTED BY THE STATE SHALL BE DISPOSED OF BY THE CONTRACTOR.

3. PAYMENT FOR REMOVAL AND DISPOSAL OF EXISTING SIGNAL EQUIPMENT SHALL BE PAID AS ITEM 900.620 SPECIAL PROVISION (REMOVAL OF EXISTING TRAFFIC CONTROL SYSTEM).

C. SIGNAL OPERATION

1. SIGNAL TIMING SHOWN ON THE PLANS MAY REQUIRE FINE-TUNING IN THE FIELD BASED ON TRAFFIC OBSERVATION. (COST OF ADJUSTMENTS SHALL BE INCIDENTAL TO OTHER ITEMS).

2. THE TRAFFIC SIGNALS SHALL NOT OPERATE WITHOUT THE PAVEMENT MARKINGS AND SIGNAL RELATED SIGNING IN PLACE.

3. THE ROUTE 2 PHASE SHALL BE USED FOR THE START-UP PHASE AFTER FLASHING OPERATION.

4. SEE TRAFFIC SIGNAL LAYOUT FOR ADDITIONAL OPERATION NOTES.

5. ALL SIGNALS SHALL DWELL ON ROUTE 2 PHASE UNLESS OTHERWISE NOTED.

D. EQUIPMENT TRAINING AND MANUALS

1. COPIES OF ALL EQUIPMENT MANUALS AS WELL AS COMPLETED PROGRAM LISTINGS FOR THE CONTROLLER/TBCs SHALL BE DISTRIBUTED AS FOLLOWS:

a.	CONTROLLER CABINET(S)	(1)
b.	VTrans DISTRICT TRANSPORTATION ENGINEER	(1)
c.	VTrans TRAFFIC DESIGN ENGINEER	(1)

E. GENERAL

1. ALL ELECTRICAL WORK AND MATERIALS SHALL BE SUBJECT TO INSPECTION AND APPROVAL OF THE STATE ELECTRICAL INSPECTOR. ALL WORK MUST MEET THE REQUIREMENTS OF THE NATIONAL ELECTRICAL CODE.

2. AFTER PROJECT ACCEPTANCE, THE TRAFFIC SIGNAL INSTALLATIONS SHALL BECOME THE PROPERTY AND RESPONSIBILITY OF THE VERMONT AGENCY OF TRANSPORTATION.

3. THE CONTRACTOR SHALL ACQUIRE ALL NECESSARY PERMITS AND MAKE ALL NECESSARY ARRANGEMENTS WITH THE UTILITY COMPANY TO PROVIDE A PERMANENT POWER SUPPLY TO SIGNALS.

4. THE REQUIRED 30-DAY TEST PERIOD FOR THE SIGNAL EQUIPMENT SHALL NOT BEGIN UNTIL ALL CONSTRUCTION IS COMPLETE AND ALL PAPERWORK HAS BEEN DONE TO THE SATISFACTION OF THE RESIDENT ENGINEER AND VTrans TRAFFIC DESIGN ENGINEER.

5. SWITCH OVER TO REPLACEMENT SIGNALS SHALL NOT BE DONE DURING PEAK TRAFFIC PERIODS. UNIFORMED TRAFFIC OFFICERS SHALL CONTROL TRAFFIC DURING SWITCH-OVER.

6. UTILITIES INFORMATION SHOWN HEREON WERE OBTAINED FROM THE BEST AVAILABLE SOURCES, AND MAY OR MAY NOT BE EITHER ACCURATE OR COMPLETE. THE CONTRACTOR SHALL VERIFY THE EXACT LOCATION OF EXISTING UTILITIES, AND SHALL BE RESPONSIBLE FOR ANY DAMAGE TO ANY UTILITY, PUBLIC OR PRIVATE, SHOWN OR NOT SHOWN HEREON. SHOULD ANY UTILITY BE DAMAGED DURING THE COURSE OF CONSTRUCTION, THE CONTRACTOR SHALL COORDINATE REPAIRS AND RESTORATION OF SERVICE WITH THE AFFECTED UTILITY(S).

VTrans Metric

Stantec

PROJECT NAME:	DANVILLE
PROJECT NUMBER:	F EGC 028-3(32)
FILE NAME: ...\PlotFiles\TSIgNotes.ptf	PLOT DATE: 1/18/2011
DESIGN SUPERVISOR: GARY SANTY	DRAWN BY: STANTEC
DESIGNED BY: STANTEC	CHECKED BY: STANTEC
TRAFFIC SIGNAL DETAIL TSD-4	SHEET 170 OF 306

1/18/2011 11:53:39 PM vt\953\active\95300033.0192\highway\PlotFiles\TSIgNotes.ptf

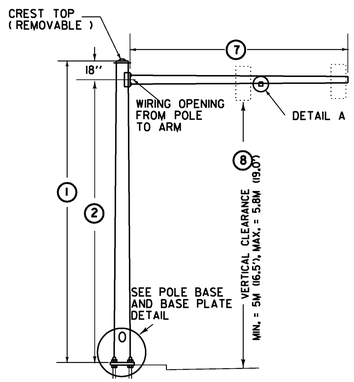

TYPE A

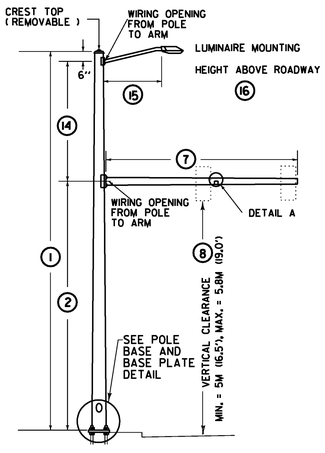

TYPE B

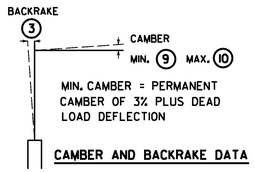

CAMBER AND BACKRAKE DATA

POLE BASE DIAMETER (4)
POLE GAUGE (5)
POLE TAPER RATE (6)
ARM DIAMETER (11)
ARM GAUGE (12)
ARM TAPER RATE (13)

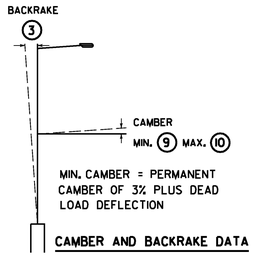

CAMBER AND BACKRAKE DATA

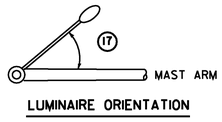

LUMINAIRE ORIENTATION



LUMINAIRE ARM RISE

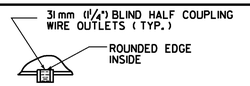

DETAIL A

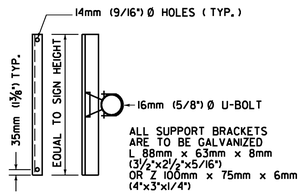

SIGN ON SINGLE
MAST ARM

SIGN BRACKET DETAILS

ANCHOR BOLT DETAIL		
SIZE	L ±0	T ±0
31mm X 1.2M	1	200
38mm X 1.5M	1.3	225
44mm X 2.3M	2.1	225
50mm X 2.4M	2.4	225

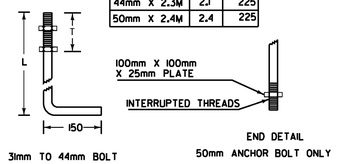

ANCHOR BOLT DETAIL

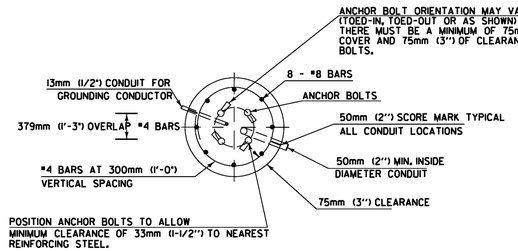

SECTION

CANTILEVER FOOTING DETAIL

(SPREAD FOOTINGS OR PILE ALTERNATIVES ARE OPTIONAL
SUBJECT TO APPROVAL OF THE RESIDENT ENGINEER)

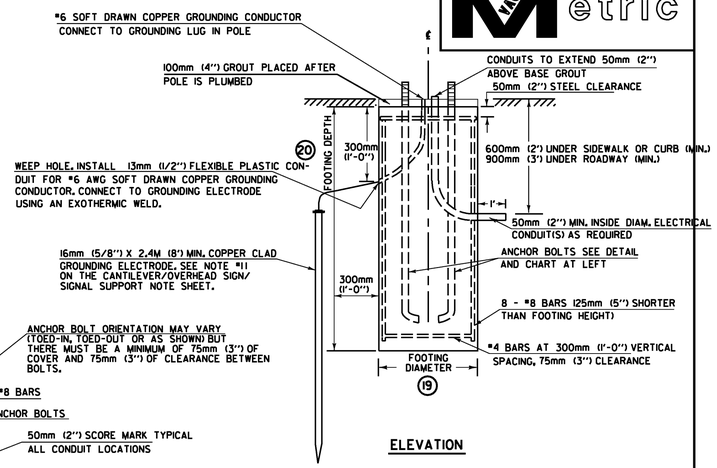

ELEVATION

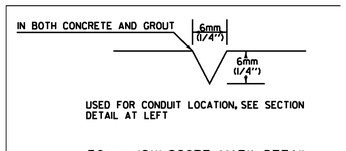

USED FOR CONDUIT LOCATION, SEE SECTION
DETAIL AT LEFT

50mm (2") SCORE MARK DETAIL

SEE SIGNAL POLE AND MAST ARM GENERAL NOTES
ON SHEET MAD-2 FOR ADDITIONAL INFORMATION

SEE MAST ARM DETAIL MAD-3 FOR CROSS SECTIONS

STRUCTURE DIMENSIONS																									
POLE DATA								ARM DATA							LIGHTING DATA					FOOTING DATA		BASE PLATE / BOLT DATA					
POLE	TYPE	(1)	(2)	(3)	(4)	(5)	(6)	(7)	(8)	(9)	(10)	(11)	(12)	(13)	(14)	(15)	(16)	(17)	(18)	(19)	(20)	(BC)	(F)	(S)	(T)	(P)	ANCHOR BOLT SIZE

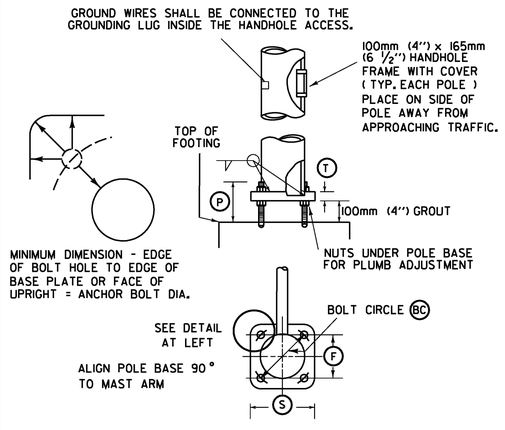

POLE BASE AND BASE PLATE DETAIL

PROJECT NAME:	DANVILLE
PROJECT NUMBER:	F EGC 028-3(32)
FILE NAME: ...\PlotFiles\MastArmDet.ptf	PLOT DATE: 1/18/2011
DESIGN SUPERVISOR: GARY SANTY	DRAWN BY: STANTEC
DESIGNED BY: STANTEC	CHECKED BY: STANTEC
MAST ARM DETAIL MAD-1	SHEET 171 OF 306

1/8/2011 11:53:40 PM v:\1953\active\195300033.092\highway\PlotFiles\MastArmDet.ptf

SIGNAL POLE AND MAST ARM GENERAL NOTES

VTRANS Metric

1. ALL MATERIALS AND CONSTRUCTION SHALL CONFORM TO THE STATE OF VERMONT, AGENCY OF TRANSPORTATION'S "STANDARD SPECIFICATIONS FOR CONSTRUCTION", DATED 2006, WITH CURRENT MODIFICATIONS AND VTRANS GEOTECHNICAL DESIGN PROCEDURES FOR MAST ARM AND OVERHEAD SIGN SUPPORT FOUNDATION MREI 10-01.

2. OVERHEAD SIGN/SIGNAL SUPPORTS SHALL CONFORM TO AASHTO 'S PUBLICATION ENTITLED "STANDARD SPECIFICATIONS FOR STRUCTURAL SUPPORTS FOR HIGHWAY SIGNS, LUMINAIRES, AND TRAFFIC SIGNALS", DATED 2009 AND ITS LATEST INTERIMS.

3. THE DESIGN CALCULATIONS SHALL TAKE INTO ACCOUNT THE FOLLOWING CRITERIA:

   STRUCTURE CRITERIA

   DESIGN LIFE: 50 YEARS
   WIND LOADS - 90 MPH, UNLESS SPECIAL SITE CONDITIONS DICTATE
   ICE LOADS PER AASHTO'S PUBLICATION ENTITLED "STANDARD SPECIFICATIONS FOR STRUCTURAL SUPPORTS FOR HIGHWAY SIGNS, LUMINAIRE'S AND TRAFFIC SIGNALS", DATED 2009.

   FOUNDATION CRITERIA

   CONCRETE: CONCRETE, HIGH PERFORMANCE CLASS B, STATE OF VERMONT, AGENCY OF TRANSPORTATION'S "STANDARD SPECIFICATIONS FOR CONSTRUCTION", DATED 2006, SECTION 501.
   REINFORCING STEEL: STATE OF VERMONT, AGENCY OF TRANSPORTATION'S "STANDARD SPECIFICATIONS FOR CONSTRUCTION", DATED 2006, SUBSECTION 713.01.
   SEE GEOTECHNICAL REPORT FOR ADDITIONAL DESIGN CRITERIA.

   FATIGUE CRITERIA

   FATIGUE CATEGORY: I FOR MAST ARM SIGN STRUCTURES, 2 FOR SIGNAL MAST ARMS
   VORTEX SHEDDING: INCLUDE
   NATURAL WIND GUSTS: INCLUDE FOR ROADWAYS WHERE SPEED LIMIT IS 40 MPH OR GREATER.
   GALLOPING: DO NOT INCLUDE IN DESIGN CALCULATIONS.

4. ANCHOR BOLTS

   FOUR STAINLESS STEEL ANCHOR BOLTS WITH TWO HEXAGON NUTS, ONE WASHER AND ONE LOCK WASHER PER BOLT SHALL BE FURNISHED WITH EACH POLE. ANCHOR BOLT PLATES, WHEN USED, SHALL ALSO BE STAINLESS STEEL. STATE OF VERMONT, AGENCY OF TRANSPORTATION'S "STANDARD SPECIFICATIONS FOR CONSTRUCTION", DATED 2006, SUBSECTION 714.09.

5. FLANGE BOLTS

   ALL FLANGE BOLTS AND HEX NUTS SHALL BE HIGH STRENGTH STEEL AND SHALL CONFORM TO STATE OF VERMONT, AGENCY OF TRANSPORTATION'S "STANDARD SPECIFICATIONS FOR CONSTRUCTION", DATED 2006, SUB SECTION 714.05.

6. HORIZONTAL AND VERTICAL MEMBERS

   STEEL TUBES SHALL BE FORMED AND WELDED WITH ONE CONTINUOUS LONGITUDINAL WELD ONLY. AFTER FORMING AND WELDING THEY SHALL BE COLD ROLLED TO ENSURE UNIFORMITY OF SIZE AND SMOOTHNESS OF WELD. THERE SHALL BE NO TRANSVERSE WELDING EXCEPT AT THE FLANGE CONNECTIONS AND POLE BASE PLATES, WHERE THE TUBES SHALL TELESCOPE THE FLANGES AND PLATES AND BE CONTINUOUSLY WELDED BOTH SIDES, INSIDE AND OUT TO WITHSTAND THE FULL TRANSFER OF THE BENDING STRENGTH TO THE BOLTS. OPTIONALLY, THE MEMBERS MAY BE A SERIES OF TWO OR THREE DIFFERENT DIAMETER PIPES WELDED TOGETHER. STEEL TUBES SHALL BE CONSTRUCTED FROM MATERIALS CONFORMING TO STATE OF VERMONT, AGENCY OF TRANSPORTATION'S "STANDARD SPECIFICATIONS FOR CONSTRUCTION", DATED 2006, SUBSECTION 752.02.

7. GALVANIZING

   ALL STEEL COMPONENTS, EXCEPT CONCRETE REINFORCING AND STAINLESS STEEL HARDWARE, ARE TO BE HOT DIPPED GALVANIZED AFTER FABRICATION. THE ASSEMBLIES SHALL BE DESIGNED AND FABRICATED TO PERMIT GALVANIZING ON ALL INTERIOR AND EXTERIOR SURFACES AND SHALL BE FREE OF POCKETS AND OTHER STRUCTURAL OBSTRUCTIONS THAT WILL NOT PERMIT PROPER DEPOSITION OF ZINC COATING. GALVANIZING SHALL BE IN ACCORDANCE WITH STATE OF VERMONT, AGENCY OF TRANSPORTATION'S "STANDARD SPECIFICATIONS FOR CONSTRUCTION", DATED 2006, SUBSECTION 752.02.

8. WELDING

   ALL DESIGN DETAILS, WORKMANSHIP, PROCEDURES AND INSPECTION SHALL CONFORM TO VERMONT, AGENCY OF TRANSPORTATION'S "STANDARD SPECIFICATIONS FOR CONSTRUCTION", DATED 2006 SUBSECTION 506.10.

9. FOUNDATIONS

   A. FOUNDATIONS SHALL BE DESIGNED IN ACCORDANCE WITH THE MREI 10-01 GUIDELINES ISSUED BY THE AGENCY.

   B. FOUNDATIONS SHALL BE CONSTRUCTED IN ACCORDANCE WITH THE FOLLOWING NOTES:
      1. A MINIMUM EMBEDMENT DEPTH OF 5 FEET SHALL BE USED FOR ALL SPREAD FOOTING FOUNDATIONS; MEASURED FROM THE GROUND SURFACE ELEVATION TO THE BOTTOM OF THE FOOTING ELEVATION.

      2. EXCEPT FOR THE UPPERMOST 2 FT OF SOIL, DRILLED SHAFT FOUNDATIONS SHALL BE POURED AGAINST UNDISTURBED MATERIAL; THE TOP 2 FT OF SOIL SHALL BE NEGLECTED FOR DESIGN PURPOSES. A DISPOSABLE CIRCULAR CONCRETE FORM, IF USED, SHALL NOT BE PLACED DEEPER THAN 2FT, IN ORDER NOT TO REDUCE THE FRICTION BETWEEN THE SOIL AND THE CONCRETE.

      3. AS AN ALTERNATIVE TO THE DRILLED HOLES, FOUNDATIONS MAY BE POURED IN EXCAVATED HOLES USING THE PROPER FORMS, WHICH MUST BE REMOVED. THE EXCAVATED HOLES SHALL BE AT LEAST 2 FT CLEAR OF THE FOUNDATION SIDES AND 1 FT DEEPER THAN THE FOUNDATION. CARE SHALL BE TAKEN TO AVOID EXCAVATING AROUND THE TOP OF THE FOUNDATION. DESIGN LIMITS AS FOR AN AUGURED FOUNDATION APPLY.

      4. BACKFILL MATERIAL PLACED ADJACENT TO THE FOUNDATION SHALL MEET THE REQUIREMENTS FOR GRANULAR BACKFILL FOR STRUCTURES, VERMONT, AGENCY OF TRANSPORTATION'S "STANDARD SPECIFICATIONS FOR CONSTRUCTION", DATED 2006 SUBSECTION 704.08. BACKFILL MATERIAL SHALL BE COMPACTED AS DESCRIBED IN VERMONT, AGENCY OF TRANSPORTATION'S "STANDARD SPECIFICATIONS FOR CONSTRUCTION", DATED 2006 SUBSECTION 204.08.

      5. CONCRETE FOR THE FOUNDATION SHALL CONFORM TO THE REQUIREMENTS OF VERMONT, AGENCY OF TRANSPORTATION'S "STANDARD SPECIFICATIONS FOR CONSTRUCTION ", DATED 2006, SECTION 501 FOR CONCRETE, HIGH PERFORMANCE CLASS B. IF DRILLED SHAFT FOUNDATIONS ARE REQUIRED, THE CONCRETE SPECIFICATIONS MAY NEED TO BE ADJUSTED FOR CONSTRUCTABILITY ISSUES. HOWEVER, IF REQUIRED, THE CONTRACTOR SHALL SUBMIT ANY CHANGES TO THE CONCRETE SPECIFICATION FOR REVIEW BY THE VTRANS PROJECT MANAGER.

      6. STEEL PILES SHALL MEET THE REQUIREMENTS OF VERMONT, AGENCY OF TRANSPORTATION'S "STANDARD SPECIFICATIONS FOR CONSTRUCTION" , DATED 2006, SECTION 505.

      7. WHEN THE DESIGN DEPTH OF A FOUNDATION CANNOT BE OBTAINED DUE TO UNFORESEEN FIELD CONDITIONS, THE CONTRACTOR SHALL NOTIFY THE ENGINEER FOR THE MANUFACTURER TO OBTAIN A REVISED FOUNDATION DESIGN. SUCH A REVISION SHALL BE SUBMITTED TO THE VERMONT, AGENCY OF TRANSPORTATION, PROJECT MANAGER AND MAY REQUIRE UP TO A 4 WEEK REVIEW PERIOD BY VTRANS.

   C. SIGNALS/SIGNS SHALL BE INSTALLED AND LEVELED AND POLES SHALL BE PLUMB PRIOR TO PLACING GROUT UNDER POLE BASE. GROUT MATERIAL SHALL BE NON-SHRINKING MORTAR CONFORMING TO VERMONT, AGENCY OF TRANSPORTATION'S "STANDARD SPECIFICATIONS FOR CONSTRUCTION", DATED 2006, SUBSECTION 707.03 (MORTAR TYPE IV).

10. EACH OVERHEAD TRAFFIC SIGNAL/SIGN SUPPORT SHALL BE GROUNDED. THE GROUND SHALL CONSIST OF:
    A. AN INTERNAL GROUND LUG OPPOSITE THE HAND HOLE.
    B. A #6 AWG (MIN.) SOFT DRAWN COPPER GROUNDING ELECTRODE CONDUCTOR.
    C. A ⅝ IN. X 8 FT (MIN) COPPER CLAD GROUNDING ELECTRODE. THE RESISTANCE TO GROUND SHALL BE 25 OHMS OR LESS. ADDITIONAL GROUNDING ELECTRODES MAY BE REQUIRED (MINIMUM SPACING SHALL BE 6 FT). WHEN A POWER SERVICE, METER AND DISCONNECT ARE ATTACHED TO A POLE, THERE SHALL BE A CONTINUOUS GROUNDING ELECTRODE CONDUCTOR FROM THE METER AND DISCONNECT WHICH MAY RUN INTERNAL TO THE UPRIGHT, THROUGH THE½ IN. FLEXIBLE TUBING IN THE CONCRETE BASE TO THE REQUIRED GROUNDING ELECTRODE(S). THE GROUNDING ELECTRODE CONDUCTOR FROM THE POLE GROUNDING LUG, CONTROLLER CABINET AND/OR LUMINAIRE MAY ATTACH TO THIS CONTINUOUS GROUNDING ELECTRODE CONDUCTOR FROM THE SERVICE METER AND DISCONNECT. THE CONTRACTOR SHALL PERFORM A RESISTANCE TO GROUND TEST ON THE CONTINUOUS GROUNDING ELECTRODE CONDUCTOR FROM THE SERVICE METER AND DISCONNECT AND PROVIDE A WRITTEN STATEMENT TO THE AREA ELECTRICAL INSPECTOR THAT THE GROUNDING ELECTRODE CONDUCTOR IS CONTINUOUS FROM THE SERVICE METER AND DISCONNECT AND THE RESISTANCE TO GROUND IS 25 OHMS OR LESS.

11. HORIZONTAL MEMBERS SHALL BE CAMBERED AND THE VERTICAL POLES BACK RAKED (WHERE APPLICABLE) TO THE ANTICIPATED DEAD LOAD DEFLECTION PLUS THE CAMBER, IF ANY, SPECIFIED ON THE PLANS.

12. AN EQUIVALENT ALTERNATE DESIGN MAY BE SUBSTITUTED FOR THE DETAILS AND MATERIALS SHOWN.

13. THE DETAILS OF DESIGN FOR THE STRUCTURE AND FOUNDATION ARE TO BE SUPPLIED BY THE CONTRACTOR AND/OR BY THE MANUFACTURER, THE STRUCTURE SHALL BE DESIGNED TO RESIST THE MAXIMUM LOADING AS OUTLINED IN THE AASHTO STANDARD SPECIFICATIONS (SEE NOTE 2). ALL DESIGN CALCULATIONS FOR THE STRUCTURE AND THE FOUNDATION SHALL BE CHECKED AND STAMPED BY AN ENGINEER REGISTERED IN THE STATE OF VERMONT PRIOR TO SUBMITTAL OF THE FABRICATION DRAWINGS TO THE VERMONT AGENCY OF TRANSPORTATION.

14. THE CONTRACTOR SHALL SUBMIT THREE(3) COPIES OF THE DESIGN CALCULATIONS TO THE VERMONT AGENCY OF TRANSPORTATION, PROJECT MANAGER, SHOWING THE FOLLOWING INFORMATION FOR EACH OF THE VERTICAL AND HORIZONTAL COMPONENTS OF THE STRUCTURE AND FOUNDATION:

    A. THE DESIGN AXIAL AND SHEAR FORCES AND BENDING AND TORSIONAL MOMENTS ACTING AT THE TOP OF THE FOUNDATION.
    B. THE DESIGN AXIAL, BENDING AND SHEAR STRESSES AND THE COMBINED STRESS RATIO.
    C. THE ALLOWABLE AXIAL, BENDING, AND SHEAR STRESSES.
    D. ITEMS A, B, D ½ SHALL BE SHOWN FOR EACH OF THE GROUP LOADINGS (I, II, III) AND FOR THE BASIC WIND LOAD APPLIED TO THE TWO CASES OUTLINED IN THE AASHTO STANDARD SPECIFICATIONS (SEE NOTE 2) SECTION 1.2.5 (D) (4).
    E. FAILURE TO SUPPLY THE PROPER DESIGN INFORMATION SHALL BE CAUSE FOR REJECTION OF THE STRUCTURE.
    F. A MINIMUM OF FOUR (4) WEEKS SHALL BE REQUIRED FOR REVIEW BY THE VERMONT AGENCY OF TRANSPORTATION.
    G. EVERY MEMBER AND CONNECTION IN AN OVERHEAD TRAFFIC SIGN SUPPORT SHALL HAVE A MAXIMUM DESIGN RATIO OF 85% TO PROVIDE RESIDUAL CAPACITY FOR FUTURE MODIFICATIONS TO SIGN SIZE OR CONFIGURATIONS.
    H. THE DETAILS OF DESIGN FOR THE STRUCTURE AND FOOTINGS ARE TO BE SUPPLIED BY THE CONTRACTOR AND/OR BY THE MANUFACTURER. THE STRUCTURE SHALL BE DESIGNED TO RESIST THE MAXIMUM LOADING AS OUTLINED IN THE AASHTO STANDARD SPECIFICATIONS (SEE NOTE 2). ALL DETAILS OF THE STRUCTUREAND THE FOOTING SHALL BE CHECKED AND STAMPED BY A STRUCTURAL ENGINEER REGISTERED IN THE STATE OF VERMONT PRIOR TO SUBMITTAL OF THE FABRICATION DRAWINGS TO THE VERMONT AGENCY OF TRANSPORTATION.

15. FABRICATION DRAWINGS (6 COPIES OF EACH) SHALL BE SUBMITTED TO THE STATE OF VERMONT, AGENCY OF TRANSPORTATION, PROJECT MANAGER FOR APPROVAL PRIOR TO FABRICATION. THE FABRICATION DRAWINGS SHALL INCLUDE THE FOLLOWING INFORMATION:
    A. DETAILED DRAWING OF EACH COMPONENT OF THE STRUCTURE.
    B. MATERIAL SPECIFICATION FOR EACH COMPONENT OF THE STRUCTURE, EITHER BY COMPLETE SPECIFICATION OR REFERENCE TO APPLICABLE ASTM STANDARDS.
    C. NOTATION OF PROJECT NAME, PROJECT NUMBER, ROUTE NUMBER, AND STRUCTURE STATIONING (TO BE INCLUDED ON EACH SHEET).
    D. DETAILS FOR LOCATION OF SIGNS/SIGNALS AND ATTACHMENT HARDWARE FOR THE SUPPORT STRUCTURE.
    E. ALL ELEVATIONS AND DIMENSIONS NECESSARY TO PROVIDE A COMPLETE SET OF RECORD PLANS.
    F. DEAD LOAD DEFLECTION AND CAMBER INFORMATION.
    G. WELDING DETAILS AND PROCEDURES ARE REQUIRED FOR ALL WELDS. PROCEDURES SHALL BE SUBMITTED FOR APPROVAL WITH REFERENCE TO EACH WELD IDENTIFIED ON THE FABRICATION DRAWINGS. (SEE VERMONT, AGENCY OF TRANSPORTATION'S "STANDARD SPECIFICATIONS FOR CONSTRUCTION", DATED 2006, SUBSECTION 506.10).

16. THE TRAFFIC SIGNALS SHALL BE MOUNTED TO THE ARM OR POLE USING A FIXED MOUNT SYSTEM, UNLESS OTHERWISE NOTED ON THE CROSS SECTION SHEET. FOR SIGNALS MOUNTED ON A MAST ARM, THE MAST ARM AND MOUNTING POINT SHALL BE IN THE MIDDLE OF THE SIGNAL HEAD.

17. BASE PLATES SHALL BE STAMPED WITH THE VERTICAL POLE DIAMETER, HEIGHT, YIELD STRENGTH, GAUGE AND THE HORIZONTAL MEMBER DIAMETER, LENGTH, YIELD STRENGTH, GAUGE, ALTERNATELY. THE INFORMATION MAY BE STAMPED ON A METAL TAG RIVETED TO THE POLE NEAR THE HAND HOLE.

18. SEE STANDARD E-171A FOR ADDITIONAL NOTES.

19. THE COST OF SIGNAL SUPPORTS, INCLUDING ALL HARDWARE BRACKETS, FOOTINGS AND LUMINAIRE ARMS SHALL BE INCLUDED IN THE UNIT BID PRICE FOR ITEM 678.15. THESE COMPONENTS SHALL CONFORM TO ALL APPLICABLE PROVISIONS OF SECTIONS 677, 678, AND 679.
    FINISH PAINT OVER GALVANIZING FOR STEEL POLES

20. A. AFTER GALVANIZING TO ASTM A123 BAKE POLES AT 375 DEGREES FOR 2 HOURS.
    B. SOLVENT WIPE ALL SURFACES TO BE PAINTED TO SSPC-SP-1.
    C. BRUSH BLAST TO SSPC-SP-7.
    D. BRUSH PRIMER TO FILL ALL PITS AND IMPERFECTIONS.
    E. APPLY POLYAMIDE EPOXY PRIMER 4-6 MILS DFT.
    F. APPLY HISOLIDS ALPHATIC POLYURETHANE 2-3 MILS DFT.
    G. WRAP ENTIRE POLE IN PAPER AND CARDBOARD AND LOAD FOR DIRECT SHIPMENT.
    H. PAINT COLOR = BLACK.
    (SEE VERMONT AGENCY OF TRANSPORTATION'S "STANDARD SPECIFICATIONS FOR CONSTRUCTION", DATED 2006, SUBSECTION 708.03).

Stantec

PROJECT NAME: DANVILLE	
PROJECT NUMBER: F EGC 028-3(32)	
FILE NAME: ...\PlotFiles\MastArmnotes.ptf	PLOT DATE: 1/18/2011
DESIGN SUPERVISOR: GARY SANTY	DRAWN BY: STANTEC
DESIGNED BY: STANTEC	CHECKED BY: STANTEC
MAST ARM DETAIL MAD-2	SHEET 172 OF 306

1/18/2011 11:53:42 PM v:\953\active\953500033.092\highway\PlotFiles\MastArmnotes.ptf

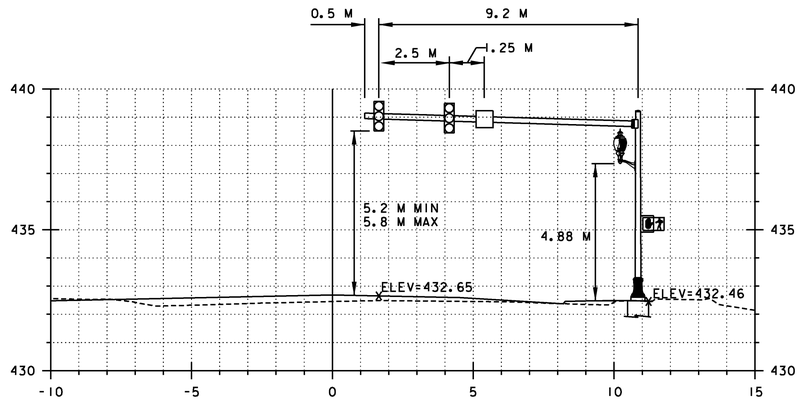

MAST ARM #1 - US ROUTE #2
19+164 (LOOKING BACKSTATION - WESTERLY)

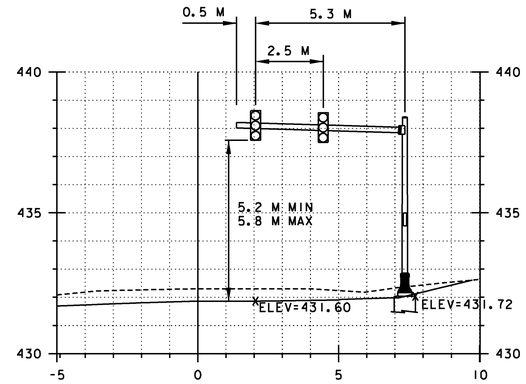

MAST ARM #3 - PEACHAM ROAD
4+022.26 (LOOKING UPSTATION - SOUTHERLY)

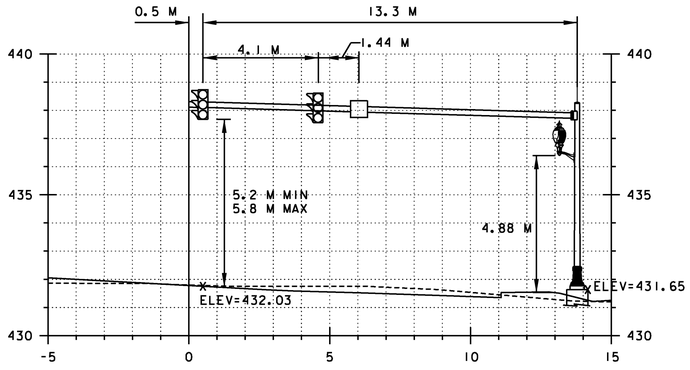

MAST ARM #2 - PEACHAM ROAD
4+008.48, 1.30m LT - 4+018.24, 11.04m LT
ARM ON BEARING N 56° 55' 56" W

PROJECT NAME: DANVILLE	
PROJECT NUMBER: F EGC 028-3(32)	
FILE NAME: ...\PlotFiles\MastArmxs.ptf	PLOT DATE: 1/18/2011
DESIGN SUPERVISOR: GARY SANTY	DRAWN BY: STANTEC
DESIGNED BY: STANTEC	CHECKED BY: STANTEC
MAST ARM DETAIL MAD-3	SHEET 173 OF 306

Stantec

1/18/2011 11:53:45 PM v:\1953\active\195300033.0192\highway\PlotFiles\MastArmxs.ptf

LANDSCAPE AND ARTISTIC ENHANCEMENTS GENERAL NOTES

Metric

GENERAL:

1. LOCATION OF ARTISTIC ENHANCEMENTS AND TREES ON LANDSCAPE AND LIGHTING PLAN SHEETS LLP-1 TO 11 ARE SHOWN AS APPROXIMATE. CONTRACTOR SHALL COORDINATE FINAL LOCATIONS IN THE FIELD WITH THE ARTISTS AND ALL UNDERGROUND UTILITIES PRIOR TO DIGGING.

GRANITE POSTS:

2. CONTRACTOR SHALL VERIFY GRANITE POST LOCATIONS WITH ARTIST PRIOR TO DIGGING.
3. THE CONTRACTOR SHALL BE RESPONSIBLE FOR INSTALLING GRANITE POST FOUNDATIONS, SETTING GRANITE POSTS, BACKFILLING, GRADING, AND SEEDING DISTURBED AREAS.
4. THE ARTIST WILL SUPPLY THE GRANITE POSTS AND WILL BE ON-SITE TO ADVISE THE CONTRACTOR ON HOW TO SET THE POST. THE ARTIST WILL PROVIDE THE TEMPLATE FOR PIN PLACEMENT IN SONOTUBE PRIOR TO POURING FOUNDATIONS.
5. CONTRACTOR WILL WORK WITH THE ARTIST SO THAT GRANITE POST DELIVERY AND INSTALLATION IS CONDUCTED WITH GREAT CARE. POSTS ARE TO BE TREATED AS RESPECTED PIECES OF ART. IF NEED BE CONTRACTOR WILL PROVIDE TEMPORARY STORAGE TO BE CERTAIN THAT GRANITE POSTS ARE ON HAND AS NEEDED.
6. CONTRACTOR WILL INSTALL GRANITE POST PLUMB AND LEVEL AS SPECIFIED ON DRAWINGS.
7. PAYMENT FOR THIS WORK SHALL BE MADE UNDER ITEM 900.620 SPECIAL PROVISION (GRANITE POST).

MAPMAKER:

8. CONTRACTOR SHALL VERIFY MAPMAKER LOCATION WITH THE ARTIST PRIOR TO DIGGING.
9. THE CONTRACTOR SHALL BE RESPONSIBLE FOR ALL WORK AND MATERIALS REQUIRED TO CONSTRUCT THE FOUNDATION, PLATFORM, AND RAMP, INCLUDING EXCAVATION AND BACKFILL, GRADING AND SEEDING OF DISTURBED AREAS.
10. LENGTH OF RAMP IS DEPENDANT ON GRADE AT CHOSEN SITE. HEIGHT OF PLATFORM ABOVE GRADE TO CONNECTING RAMP NOT TO EXCEED 12".
11. DECKING MATERIAL IS CEDAR.
12. ALL WOODEN STRUCTURES WILL BE PAINTED OR SEALED.
13. ARTIST WILL PROVIDE AND INSTALL ALL MAPMAKER DEVICES, MAP OF MOUNTAINS PANELS AND ADA RAILING FOR THE RAMP AND PLATFORM.
14. CONTRACTOR SHALL SUPPLY AND INSTALL SHRUBS, AS DETAILED ON ARTISTIC ENHANCEMENT PLAN AEP-2, TO COVER EXPOSED SONOTUBE FOUNDATIONS.
15. THREADED RODS PROJECT OUT OF THE 12" SONOTUBES APPROXIMATELY 16". THIS WILL ENABLE THESE RODS TO PASS THROUGH THE DECKING AS WELL AS STAINLESS STEEL MOUNTING PLATES OR PEDESTALS FOR THE MAP OF THE MOUNTAINS AND RAILING.
16. THE 2X8" FRAMING CAN BE LEVELED BY USING WOOD SHIMS BETWEEN THE SONOTUBE AND THE FRAMING MEMBERS.
17. GREAT CARE WILL BE REQUIRED DURING LOCATION OF THE SONOTUBES AND THE PROJECTING THREADED RODS SO THAT THE 12" SONOTUBES ARE EQUALLY SPACED RELATIVE TO THE CENTER PIER AS WELL AS EACH OTHER. THIS CAN BEST BE DONE USING A PLATE (PROVIDED BY ARTIST), WHICH HAS FOUR HOLES CORRESPONDING TO THE 4 THREADED RODS IN THE CENTER PIER AS WELL AS A RIGIDLY ATTACHED CENTER SHAFT. SIX (6) PIECES OF LUMBER SAWN TO THE SAME LENGTH AND HAVING TWO½" HOLES DRILLED NEAR EACH END, SPACED APART THE DISTANCE CORRESPONDING TO THE DISTANCE BETWEEN THE ADJACENT THREADED RODS IN ADJACENT 12" SONOTUBES CAN BE USED TO PROPERLY LOCATE THESE THREADED RODS WHILE THE CONCRETE SETS IN THE SONOTUBES.
18. SIX (6) PIECES OF LUMBER OF EQUAL LENGTH CAN THEN BE ATTACHED BETWEEN THE ENDS OF THE PREVIOUSLY MENTIONED PIECES AND THE CENTRAL SHAFT IN ORDER TO ACHIEVE ACCURATE PLACEMENT OF THE RODS IN THE 12" SONOTUBES RELATIVE TO THE CENTER PIER.
19. TO ATTACH THE 2X10 MAIN FRAMING MEMBERS TO EACH OTHER AT THE CENTER AND AT THE OUTSIDE USE GALVANIZED OR PAINTED STEEL BRACKETS OR GUSSET PLATES, PRE-DRILLED TO ENABLE SCREWING TO THE FRAMING MEMBERS.
20. PAIRS OF 2X8'S SHALL BE USED FOR THE RADIAL-FRAMING MEMBERS, INSTEAD OF SINGLE 2X10'S, AS THIS WILL PROVIDE MORE SURFACE FOR ATTACHMENT OF THE DECKING.
21. PAYMENT FOR THIS WORK SHALL BE MADE UNDER ITEM 900.645 SPECIAL PROVISION (MAPMAKER).

GRANITE POST #2 KINETIC THERMOMETER:

22. CONTRACTOR SHALL VERIFY GRANITE POST LOCATION WITH THE ARTIST PRIOR TO DIGGING. ARTIST SHALL BE PRESENT FOR INSTALLATION OF GRANITE POST.
23. CONTRACTOR TO INSTALL SONOTUBE SUBBASE, SONOTUBE, INSTALL SONOTUBE FOUNDATIONS, AND SET PINS (WITH TEMPLATE AND PINS PROVIDED BY ARTIST).
24. CONTRACTOR WILL WORK WITH THE ARTIST SO THAT KINETIC THERMOMETER DELIVERY AND INSTALLATION IS CONDUCTED WITH GREAT CARE. IF NEED BE CONTRACTOR WILL PROVIDE TEMPORARY STORAGE TO BE CERTAIN THAT THE KINETIC THERMOMETER IS ON HAND WHEN NEEDED.
25. CONTRACTOR WILL INSTALL KINETIC THERMOMETER PLUMB AND LEVEL AS SPECIFIED ON DRAWINGS AND COORDINATE INSTALLATION OF KINETIC THERMOMETER WITH THE SIDEWALK PLAN.
26. ARTIST WILL FABRICATE AND DELIVER KINETIC THERMOMETER TO THE SITE, AND WILL PROVIDE A SPECIFIC TEMPLATE AND PINS FOR THE SONOTUBE PRIOR TO POURING THE FOUNDATION.
27. PAYMENT FOR THIS WORK SHALL BE MADE UNDER ITEM 900.620 SPECIAL PROVISION (GRANITE POST).

GRANITE POST #12 WATER TROUGH:

28. HISTORICAL WATER TROUGH TO BE CAREFULLY REMOVED AND STORED PRIOR TO WORK ON THE DANVILLE GREEN. ALL PRECAUTIONS SHALL BE USED BY THE CONTRACTOR DURING HANDLING AND STORAGE OF THE WATER TROUGH TO MAINTAIN IT'S CURRENT CONDITION.
29. CONTRACTOR SHALL VERIFY NEW LOCATION OF WATER TROUGH WITH THE ARTIST PRIOR TO DIGGING.
30. CONTRACTOR SHALL INSTALL WATER LINE WITH SHUT-OFF TO GRANITE POST AS SHOWN ON THE FIRE DISTRICT WATER PLAN SHEETS.
31. CONTRACTOR SHALL INSTALL DRAINAGE AGGREGATE AND GRANITE POST FOUNDATION.
32. CONTRACTOR WILL COMPLETE PLUMBING AND WATER CONNECTIONS.
33. CONTRACTOR WILL INSTALL TROUGH, AND GRANITE POST, WITH FIXTURE PLUMB AND LEVEL.
34. CONTRACTOR WILL BACKFILL WITH REMOVED EARTH, REPLACE TOPSOIL AND REPLANT GRASS AND COMPLETE LANDSCAPING SURROUNDING WATER TROUGH AS PER LANDSCAPE PLAN.
35. ARTIST TO PROVIDE GRANITE POST WITH WATER TROUGH FIXTURE TO CONTRACTOR FOR INSTALLATION.
36. ARTIST TO PROVIDE PLUMBING FIXTURE AND APPURTENANCES FOR EVERYTHING (ABOVE GROUND) AS PART OF GRANITE POST.
37. ARTIST WILL COORDINATE INSTALLATION OF WATER TROUGH AND WATER TROUGH FIXTURE WITH CONTRACTOR PRIOR TO THE CONTRACTOR INSTALLING DRAINAGE AGGREGATE AND FOUNDATION.
38. ARTIST WILL VERIFY THE LOCATION IN FIELD FOR PLACEMENT OF WATER TROUGH PRIOR TO INSTALLATION.
39. ARTIST TO BE CONSULTED BY CONTRACTOR AND ARTIST WILL BE PRESENT AT DATE OF ACTUAL INSTALLATION OF WATER TROUGH.
40. PAYMENT FOR THIS WORK SHALL BE MADE UNDER ITEM 900.645 SPECIAL PROVISION (WATER TROUGH AND STAIRS).

GRANITE POSTS #4 AND #13 DRINKING FOUNTAIN:

41. CONTRACTOR SHALL INSTALL WATER LINE WITH SHUT OFF, DRAINAGE AGGREGATE, GRANITE POST FOUNDATION, AND INSTALL GRANITE POST ON FOUNDATION.
42. CONTRACTOR SHALL COORDINATE LOCATION AND INSTALLATION OF GRANITE POST WITH ARTIST AND COMPLETE PLUMBING AND WATER CONNECTIONS IN COORDINATION WITH ARTIST FOR DRINKING FOUNTAIN FIXTURE.
43. CONTRACTOR WILL INSTALL GRANITE POST WITH DRINKING FOUNTAIN FIXTURE PLUMB AND LEVEL.
44. CONTRACTOR WILL BACKFILL WITH REMOVED EARTH, REPLACE TOPSOIL AND REPLANT GRASS.
45. ARTIST WILL VERIFY THE LOCATION IN FIELD FOR BOTH DRINKING FOUNTAINS PRIOR TO INSTALLATION.
46. ARTIST TO BE CONSULTED AND PRESENT AT DATE OF ACTUAL INSTALLATION OF DRINKING FOUNTAINS.
47. ARTIST TO PROVIDE GRANITE POST WITH DRINKING FOUNTAIN FIXTURE (ABOVE GROUND) TO CONTRACTOR FOR INSTALLATION.
48. ARTIST WILL COORDINATE PLUMBING WITH CONTRACTOR PRIOR TO THE CONTRACTOR INSTALLING DRAINAGE AGGREGATE AND FOUNDATION.
49. PAYMENT FOR THIS WORK SHALL BE MADE UNDER ITEM 900.620 SPECIAL PROVISION (GRANITE POST).

FIELDSTONE WALL (AMPHITHEATRE) AND DANVILLE CIRCLE:

50. CONTRACTOR SHALL VERIFY LOCATION OF AMPHITHEATRE AND DANVILLE CIRCLE WITH ARTIST PRIOR TO DIGGING.
51. CONTRACTOR WILL PROVIDE PRELIMINARY SITE WORK, ROUGH GRADING, EXCAVATION, COMPACTED CRUSHED STONE BASE BENEATH WALL, COMPACTED SUBBASE BELOW THE BOULDERS (LOCATION TO BE VERIFIED BY ARTIST), PLACEMENT OF BOULDERS, DANVILLE CIRCLE DRAIN PIPE AND FINISH GRADING INCLUDING TOPSOIL REPLACEMENT AND SEEDING/MULCHING.
52. ARTIST WILL VERIFY THE LOCATION IN FIELD PRIOR TO ANY INSTALLATION OF THE AMPHITHEATRE AND DANVILLE CIRCLE.
53. ARTIST TO BE CONSULTED BY CONTRACTOR AND ARTIST/MASON WILL BE PRESENT AT DATE OF ACTUAL COMMENCEMENT OF ROUGH GRADING FOR AMPHITHEATER AND DANVILLE CIRCLE.
54. ARTIST/MASON SHALL PROVIDE AND INSTALL ALL STONES NECESSARY FOR COMPLETION OF DRY STONE WALLS, STEPS AND PAVERS.
55. ARTIST SHALL FURNISH AND INSTALL PERENNIALS IN DANVILLE CIRCLE. CONTRACTOR SHALL FURNISH AND INSTALL PLANTINGS AROUND AMPHITHEATRE.
56. PAYMENT SHALL BE MADE UNDER ITEMS 900.645 SPECIAL PROVISION (DANVILLE CIRCLE) AND 900.645 SPECIAL PROVISION (FIELD STONE WALL).

WEATHER VANE AND DIRECTIONAL AND LETTERING FOR BANDSTAND:

57. CONTRACTOR WILL WORK WITH ARTIST TO BE CERTAIN THAT WEATHERVANE AND DIRECTIONAL FOR BANDSTAND IS DESIGNED AND MANUFACTURED TO FIT WITH THE SPECIFICATIONS OF BANDSTAND CONSTRUCTION- THAT INCLUDES 1 ½" O.D. STAINLESS STEEL PIPE THROUGH TOP OF ROOF STRUCTURE TO RECEIVE WEATHERVANE AND DIRECTIONAL CONNECTION.
58. THE ARTIST WILL SUPPLY AND INSTALL THE WEATHERVANE AND DIRECTIONAL ON THE BANDSTAND. CONTRACTOR WILL COORDINATE WITH THE ARTIST TO SCHEDULE THIS INSTALLATION.
59. CONTRACTOR WILL WORK WITH ARTIST TO BE CERTAIN THAT LETTERING OF BANDSTAND IS DESIGNED AND MANUFACTURED TO FIT WITH THE FRIEZE OF BANDSTAND CONSTRUCTION.
60. ARTIST TO PROVIDE WEATHERVANE,DIRECTIONAL, AND STAINLESS STEEL BALL FOR BANDSTAND ALL FITTED TO A 1 ¼" O.D. PIPE.
61. ARTIST WILL NEED TO WORK WITH CONTRACTOR TO COORDINATE DELIVERY AND INSTALLATION WITH BANDSTAND CONSTRUCTION.
62. ARTIST WILL INSTALL WEATHERVANE INTO TOP OF BANDSTAND IN COORDINATION AND COMMUNICATION WITH THE BANDSTAND CONSTRUCTION SCHEDULE.
63. ARTIST/CONTRACTOR WILL COORDINATE SMALL CAP FITTING AT THE PEAK OF ROOF TO COMPLETE INSTALLATION OF WEATHERVANE AND DIRECTIONAL OF BANDSTAND.
64. ARTIST WILL PROVIDE AND INSTALL LETTERING FOR FRIEZE OF BANDSTAND OF THE SIX COMMUNITIES OF DANVILLE.
65. PAYMENT FOR THIS WORK SHALL BE MADE UNDER ITEM 900.645 SPECIAL PROVISION (RECONSTRUCT BANDSTAND).

LANDSCAPING

66. SEE LANDSCAPING DETAILS SHEET LND-5 FOR PLANTING AND TREE PROTECTION DETAILS.
67. BACKFILL MATERIALS FOR PLANTINGS SHALL BE PAID AS ITEM 656.80 LANDSCAPE BACKFILL, TRUCK MEASUREMENT. LOCATIONS OF LANDSCAPE BACKFILL ARE SHOWN ON THE LANDSCAPE DETAIL SHEETS FOR THE STANDARD TREE AND SHRUB PLANTING, AS WELL AS THE LANDSCAPE BACKFILL AREAS AS SHOWN ON THE LANDSCAPE AND LIGHTING PLAN SHEETS.

TREE AND SHRUB ALTERNATES FOR PROPRIETARY SELECTIONS

68. THE FOLLOWING TREES AND SHRUBS MAY BE SUBSTITUTED FOR THE PRIMARY SELECTIONS IF AND WHEN THE PRIMARY PROPRIETARY SELECTION IS NOT AVAILABLE OR THE COST OF THE PRIMARY PROPRIETARY SELECTION EXCEEDS THE COST OF AN ALTERNATE. LANDSCAPE ARCHITECT SHALL APPROVE ALL SUBSTITUTIONS PRIOR TO INSTALLATION.
69. FOR ACER SACCHARUM "GREEN MOUNTAIN', GREEN MOUNTAIN SUGAR MAPLE THE FOLLOWING MAY BE SUBSTITUTED: ACER SACCHARUM 'JEFCAN', UNITY SUGAR MAPLE; ACER SACCHARUM 'LEGACY', LEGACY SUGAR MAPLE
70. FOR ACER X. FREEMANII 'ARMSTRONG', 'ARMSTRONG' FREEMAN MAPLE THE FOLLOWING MAY BE SUBSTITUTED: ACER RUBRUM 'COLUMNAR', COLUMNAR RED MAPLE; ACER RUBRUM 'BOWHALL', BOWHALL RED MAPLE
71. FOR ACER X. FREEMANII 'JEFFERSRED', AUTUMN BLAZE FREEMAN MAPLE THE FOLLOWING MAY BE SUBSTITUTED: ACER SACCHARUM 'BALISTA', FALL FIESTA SUGAR MAPLE; ACER SACCHARUM 'BONFIRE', BONFIRE SUGAR MAPLE
72. FOR BETULA LENTA 'LITTLE KING', 'LITTLE KING' RIVER BIRCH THE FOLLOWING MAY BE SUBSTITUTED: ACER GRISEUM X. NIKOENSE 'MOLLY FORDHAM', MOLLY FORDHAM MAPLE ; ACER TRUNCATUM, PURPLEBLOW MAPLE
73. FOR GINKGO BILOBA 'PRINCETON SENTRY', 'PRINCETON SENTRY' GINKGO THE FOLLOWING MAY BE SUBSTITUTED: CARPINUS BETULUS 'FASTIGIATA', FASTIGIATE COMMON HORNBEAM; ACER RUBRUM 'COLUMNARE', COLUMNAR RED MAPLE
74. FOR MALUS 'ADIRONDACK', 'ADIRONDACK' CRABAPPLE THE FOLLOWING MAY BE SUBSTITUTED: SYRINGA RETICULATA 'IVORY SILK', IVORY SILK JAPANESE TREE LILAC; MALUS 'HARVEST GOLD', HARVEST GOLD CRABAPPLE
75. FOR SYRINGA RETICULATA 'IVORY SILK', IVORY SILK JAPANESE TREE LILAC THE FOLLOWING MAY BE SUBSTITUTED: SYRINGA RETICULATA 'SUMMER SNOW', SUMMER SNOW JAPANESE TREE LILAC; SYRINGA RETICULATA 'REGENT', REGENT JAPANESE TREE LILAC

Stantec

PROJECT NAME: DANVILLE	
PROJECT NUMBER: F EGC 028-3(32)	
FILE NAME: ...\LANDSCAPING-NOTES01.ptf	PLOT DATE: 1/18/2011
DESIGN SUPERVISOR: GARY SANTY	DRAWN BY: STANTEC
DESIGNED BY: STANTEC	CHECKED BY: STANTEC
LANDSCAPING GENERAL NOTES SHT. LNS-1	SHEET 174 OF 306

1/18/2011 11:53:47 PM v:\0953\active\09530033.002\highway\Plotfiles\LANDSCAPING-NOTES01.ptf

76. FOR TILIA AMERICANA 'REDMOND', REDMOND AMERICAN BASSWOOD THE FOLLOWING MAY BE SUBSTITUTED: TILIA AMERICANA 'BAIYARD', 'FRONT YARD LINDEN; TILIA CORDATA 'CHANCOLE', CHANCELLOR LITTLELEAF LINDEN

77. FOR ULMUS AMERICANA 'PRINCETON', PRINCETON AMERICAN ELM THE FOLLOWING MAY BE SUBSTITUTED: ULMUS AMERICANA 'LIBERTY', LIBERTY AMERICAN ELM; ULMUS AMERICANA 'VALLEY FORGE', VALLEY FORGE AMERICAN ELM

78. FOR CORNUS SERICEA 'BALYEI', BAILEY RED STEM DOGWOOD THE FOLLOWING MAY BE SUBSTITUTED: CORNUS SERICEA 'CARDINAL', CARDINAL RED STEM DOGWOOD; CORNUS SERICEA 'ISANTI', ISANTI RED STEM DOGWOOD

79. FOR ILEX VERTICILLATA 'RED SPRITE', RED SPRITE DWARF WINTERBERRY THE FOLLOWING MAY BE SUBSTITUTED: ILEX VERTICILLATA 'HOOGENDORN', HOOGENDORN WINTERBERRY; ILEX VERTICILLATA 'SHAVER', SHAVER WINTERBERRY

80. FOR KALMIA LATIFOLIA 'TINKERBELL', TINKERBELL SHEEP LAUREL THE FOLLOWING MAY BE SUBSTITUTED: KALMIA LATIFOLIA 'TIDDLYWINKS', TIDDLYWINKS SHEEP LAUREL; KALMIA LATIFOLIA 'ROYAL DWARF', ROYAL DWARF SHEEP LAUREL

81. FOR WEIGELA FLORIDA 'MIDNIGHT WAVE', MIDNIGHT WAVE WEIGELA THE FOLLOWING MAY BE SUBSTITUTED: HEUCHERA MICRANTHA VAR. DIVERSIFLORA 'PALACE PURPLE', PALACE PURPLE ALUMROOT; HEUCHERA X. VILLOSA 'MOCHA', MOCHA HAIRY ALUMROOT

82. FOR POTENTILLA FRUTICOSA 'ABBOTSWOOD', ABBOTSWOOD SHRUBBY CINQUEFOIL THE FOLLOWING MAY BE SUBSTITUTED: PHILADELPHUS X. LEMOINEI 'MANTEAU D' HEMINE', DWARF MOCKORANGE; POTENTILLA FRUTICOSA 'PINK BEAUTY', PINK BEAUTY BUSH CINQUEFOIL

83. FOR CALAMAGROSTIS ACUTIFLORA 'OVERDAM', OVERDAM FEATHER REED GRASS THE FOLLOWING MAY BE SUBSTITUTED: CALAMAGROSTIS X. ACUTIFLORA 'AVALANCHE'; CORNUS SERICEA 'ARCTIC FIRE', DWARF RED-TWIG DOGWOOD

84. FOR PENSTEMON BARBATUS 'PRAIRIE DUSK', PRAIRIE DUSK SCARLET BUGLER THE FOLLOWING MAY BE SUBSTITUTED: PENSTEMON DIGITALIS 'HUSKER RED', FOXGLOVE PENSTEMON; PENSTEMON BARBATUS 'ELFIN PINK', ELFIN PINK SCARLET BUGLER

DANVILLE GREEN

85. AREAS OF THE DANVILLE GREEN OUTSIDE OF THE LIMITS OF CONSTRUCTION, AS SHOWN ON THE PLANS, SHALL ONLY BE ACCESSED FOR INSTALLATION OF SPECIFIC CONTRACT ITEMS (i.e. TREES, GRANITE POSTS, ETC.). THESE AREAS ARE NOT TO BE USED AS STAGING, STORAGE OF MATERIALS OR ANY OTHER CONSTRUCTION ACTIVITY.

86. PROJECT DEMARCATION FENCING (PDF) LOCATIONS, AS SHOWN ON EPSC PRE-CONSTRUCTION PLANS, SHALL BE MAINTAINED TO PROTECT SOIL FROM COMPACTION AROUND EXISTING AND NEW TREES ON THE DANVILLE GREEN AND SHALL BE PAID AS ITEM 653.55 PROJECT DEMARCATION FENCE. THE TREES ON THE GREEN THAT ARE VERY CLOSE TO CONSTRUCTION WILL REQUIRE ADDITIONAL FENCING AS SHOWN ON THE TREE PROTECTION AND REMOVAL PLAN TPR-1, PAYMENT FOR THIS WORK SHALL BE PAID AS ITEM 656.85 TREE PROTECTION.

87. IN AREAS THAT ARE RE-GRADED, EVERY EFFORT WILL BE MADE TO MINIMIZE SOIL COMPACTION. DO NOT COMPACT TOPSOIL FILL IN AREAS FOR PLANTING OF NEW TREES ON DANVILLE GREEN. MINIMIZE COMPACTION TO CREATE A ZONE FOR EACH NEW TREE THAT IS 10M X10M SO AS NOT TO RESTRICT NEW ROOT GROWTH. IF UNSUITABLE SOIL CONDITIONS FOR PLANTING NEW TREES ARE ENCOUNTERED, THE RESIDENT ENGINEER MAY APPROVE USE OF LANDSCAPE BACKFILL IN 3M RADIUS FROM PROPOSED TRUNK LOCATION.

88. IN AREAS WHERE NO GRADING WILL OCCUR, SOIL IS NOT TO BE COMPACTED. MATERIALS ARE NOT TO BE STORED AND ALL ACTIVITY WILL BE LIMITED TO ACCESS NECESSARY FOR THE INSTALLATION OF NEW FEATURES AND THE BANDSTAND RECONSTRUCTION. TREES AND THEIR ROOT ZONES ARE TO BE PRESERVED AND PROTECTED DURING CONSTRUCTION. THE EXISTING SOIL IS NOT TO BE COMPACTED OR DISTURBED IN ORDER TO PRESERVE EXISTING TREES AND TO PROVIDE GOOD SOIL CONDITIONS FOR NEW TREES ON THE DANVILLE GREEN.

HARDWARE ALTERNATES FOR PROPRIETARY ITEMS

89. DOUBLE STRAP HINGE ON GATE

SUPPLIER	ADDRESS	PART NUMBER	NOTES
BARN DOOR HARDWARE	EL SEGUNDO, CA	8312-S18P	GATE HANGER BOLT INCLUDED
BETTER BARNS HARDWARE	COLLINSVILLE, CT	3503	
WAYSIDE FENCE, CO.	BAYSHORE, NY	DS18B	

90. THROW-OVER GATE LOOP

SUPPLIER	ADDRESS	PART NUMBER
BETTER BARNS HARDWARE	COLLINSVILLE, CT	3507
SNUG COTTAGE HARDWARE	PORT HURTON, MI	4200-03SP

91. DRAIN

SUPPLIER	ADDRESS	PART NUMBER
ZURN	VARIOUS SUPPLIERS	7-415-B
JR SMITH	VARIOUS SUPPLIERS	2010-A

92. WHITE PAINT AT FENCE, GATE, BANDSTAND

SUPPLIER	ADDRESS	PART NUMBER
PRATT AND LAMBERT	BUFFALO, NY	STAIN SHEILD SOLID COLOR LATEX SIDING STAIN, COLOR SUPER ONE COAT WHITE
CABOT	NEWBURYPORT, MA	SOLID COLOR 100% ACRYLIC DECKING STAIN # 1800 SERIES, COLOR WHITE

93. GRAY PAINT AT BANDSTAND, MAPMAKER PLATFORM

SUPPLIER	ADDRESS	PART NUMBER
DEFY	RICHMOND, IN	WATER REPELLANT WOOD STAIN, COLOR SIERRA SILVER
WEATHERALL	CHARLESTOWN, IN	UV GUARD, COLOR DARK GRAY

94. SEMI-TRANSPARENT SEALER FOR DOLE OAK ALTERNATE

SUPPLIER	ADDRESS	PART NUMBER NOTES
DEFY	RICHMOND, IN	WATER REPELLANT WOOD STAIN, COLOR HERITAGE WALNUT
WEATHERALL	CHARLESTOWN, IN	UV GUARD, COLOR LIGHT BROWN

95. STANDING SEAM METAL ROOFING FOR BANDSTAND

SUPPLIER	ADDRESS	PART NUMBER /SPECIFICATION
AMS	EUFAULA, ALABAMA	12" LOKSEAM PANEL, 22 GAUGE ALUMINUM-SINC ALLOY COATED AZ50 STEEL
MBCI	HOUSTON, TEXAS	12" LOKSEAM PANELS, WITH GALVALUMEPLUS FINISH

96. FIBERGLASS COLUMNS FOR BANDSTAND

SUPPLIER	ADDRESS	PART NUMBER /SPECIFICATION
ARCHITECTURAL DETAIL	LOGAN, UT	12" DIAMETER, SMOOTH, NON-TAPERED ROUND, 10' HEIGHT, TUSCAN CAP AND BASE, 8,000 LOAD CAPACITY
PACIFIC COLUMNS	BREA, CA	ES1210ANPSATUTU

1/18/2011 11:53:49 PM V:\1953\active\195300033.0192\Highway 1\Plot Files\LANDSCAPING-NOTES02.ptf

VTrans Metric

APPROX. LOCATION OF M. OAK TO BE PROTECTED UNLESS LOCATION OF TREE IS IN THE PROPOSED CONSTRUCTION

NOTES:
1. REMOVAL OF TREES SHALL BE PAID UNDER ITEM 201.10 CLEARING AND GRUBBING, INCLUDING INDIVIDUAL TREES AND STUMPS.
2. ALL WORK REQUIRED TO PROTECT TREES SHALL BE PAID UNDER ITEM 656.85 TREE PROTECTION. SEE LANDSCAPE DETAILS SHEET LND-5 FOR DETAIL.
3. CONTRACTOR SHALL CONSULT WITH THE LANDSCAPE ARCHITECT REGARDING REMOVAL OF ALL OTHER TREES NOT SHOWN ON THIS PLAN THAT ARE LOCATED WITHIN THE OR IN THE VICINITY OF THE PROJECT LIMITS.

LEGEND

PROTECTION FENCE

TREE REMOVAL

0 10 20

SCALE 1:250

PROJECT NAME:	DANVILLE
PROJECT NUMBER:	F EGC 028-3(32)
FILE NAME: ...\088-tree protect plan.ptf	PLOT DATE: 1/18/2011
DESIGN SUPERVISOR: GARY SANTY	DRAWN BY: STANTEC
DESIGNED BY: STANTEC	CHECKED BY: STANTEC
TREE PROTECTION & REMOVAL PLAN TPR-1	SHEET 176 OF 306

Stantec

1/18/2011 1:53:51 PM v:\1953\active\195310033\092\highway\PlotFiles\088-tree protect plan.ptf

LANDSCAPE AND LIGHTING LEGEND

- PROPOSED CONIFEROUS — SHOWN AT APPROXIMATE 20-YEAR GROWTH SPREAD
- PROPOSED DECIDUOUS — SHOWN AT APPROXIMATE 20-YEAR GROWTH SPREAD
- EXISTING TREES
- LIGHTING LOCATIONS (ARROW SHOWS DISTRIBUTION DIRECTION)
- GRANITE POST LOCATIONS
- HANDHOLE
- LP — ROUTE 2 LIGHTING METER PEDESTAL SEE DETAIL ON LIGHTING DETAILS SHEET LTD-6
- GRN — DANVILLE GREEN METER PEDESTAL SEE DETAIL ON LIGHTING DETAILS SHEET LTD-6
- 3 / LND-3 — LANDSCAPING DETAIL SHEET
- LANDSCAPE BACKFILL
- WIRED CONDUIT (PVC) (50mm)
- ELECTRICAL CONDUIT SLEEVE (200mm) (PVC)

679.45 – LIGHT POLE

POLE NO.	LOCATION	FIXTURE TYPE	WATTS	TYPE	MOUNTING HEIGHT	BREAKAWAY
SL-1	18+561.00, 5.70M LT	B	175	III	5.48M	X
SL-2	18+561.00, 7.46M RT	B	175	III	5.48M	X
SL-3	18+591.00, 5.70M LT	B	175	III	5.48M	X
SL-4	18+591.00, 6.71M RT	B	175	III	5.48M	X

678.26 – JUNCTION BOX

HAND HOLE NO.	LOCATION
HH-1	18+583.00, 5.72M LT
HH-2	18+583.00, 7.00M RT

678.30 – ELECTRICAL CONDUIT SLEEVE (200mm)(PVC)

STA.	LOCATION
18+583	LT-RT

656.80 – LANDSCAPE BACKFILL, TRUCK MEASUREMENT

STA.	LENGTH X WIDTH X DEPTH
18+565 - 18+587 RT	22M X 3M X 0.5M
18+597 - 18+600 RT	3M X 3M X 0.5M

900.620 – SPECIAL PROVISION (GRANITE POST)

STA.	LOCATION	DESCRIPTION
18+563.9	LT	GRANITE POST #24
18+563.9	RT	GRANITE POST #23

656.30 – DECIDUOUS TREES

STA.	NO.	LOCATION	DESCRIPTION
18+567.8 - 18+584.7	4	RT	ADIRONDOCK CRABAPPLE
18+567.8 - 18+584.7	4	LT	ADIRONDOCK CRABAPPLE
18+598.5	1	RT	JAPANESE TREE LILAC
18+598.5	1	LT	JAPANESE TREE LILAC

900.640 – SPECIAL PROVISION (GRANITE POST AND WOOD DIAMOND RAIL FENCE)

STA.	LOCATION
18+563.9 - 18+582.0	RT
18+563.9 - 18+582.0	LT

VAOT Metric

N

VT STATE PLANE GRID

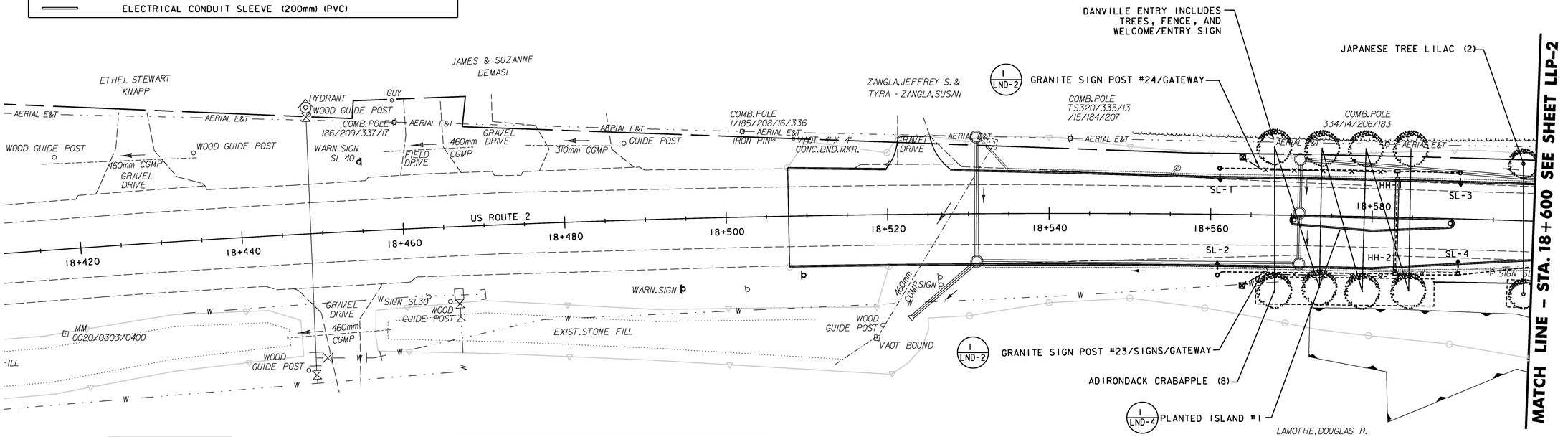

TREE SCHEDULE

QUANTITY	BOTANICAL NAME	COMMON NAME	SIZE	PLANT
13	ACER SACCHARUM 'GREEN MOUNTAIN'	GREEN MOUNTAIN SUGAR MAPLE	80-90 mm CAL.	SPRING
4	ACER X. FREEMANII 'ARMSTRONG'	ARMSTRONG FREEMAN MAPLE	50-65 mm CAL.	SPRING
2	ACER X. FREEMANII 'JEFFERSRED'	AUTUMN BLAZE MAPLE	50-80 mm CAL.	SPRING
6	BETULA LENTA	SWEET BIRCH	2.4-3 M CLUMP	SPRING
1	BETULA NIGRA 'LITTLE KING'	RIVER BIRCH	#7 CONT.	SPRING
3	CARPINUS CAROLINIANA	AMERICAN HORNBEAM	50-65 mm CAL.	SPRING
4	CELTIS OCCIDENTALIS	COMMON HACKBERRY	50-65 mm CAL.	SPRING
4	CERCIDIPHYLLUM JAPONICUM	KATSURA TREE	50-65 mm CAL.	SPRING
3	CRATAEGUS CRUS-GALLI VAR. INERMIS	THORNLESS COCKSPUR HAWTHORN	50-65 mm CAL.	SPRING
2	GINK GO BILOBA 'PRINCETON SENTRY'	PRINCETON SENTRY GINKGO	50-65 mm CAL.	SPRING
10	LARIX DECIDUA	LARCH	1.8-2.4 M HT.	SPRING
20	MALUS 'ADIRONDACK'	ADIRONDACK CRABAPPLE	1.2-1.5 M HT	SPRING
3	OSTRYA VIRGINIANA	AMERICAN HOPHORNBEAM	50-65 mm CAL.	SPRING
10	PICEA GLAUCA	WHITE SPRUCE	1.8-2.4 M HT.	SPRING
15	QUERCUS MACROCARPA	BUR OAK	50-65 mm CAL.	SPRING
26	QUERCUS RUBRA	RED OAK	50-65 mm CAL.	SPRING
28	SYRINGA RETICULATA 'IVORY SILK'	JAPANESE TREE LILAC	50-65 mm CAL.	SPRING
17	THUJA OCCIDENTALIS	ARBORVITAE	900-1200 mm HT.	SPRING
4	TILIA AMERICANA 'REDMOND'	REDMOND AMERICAN BASSWOOD	50-65 mm CAL.	SPRING
14	ULMUS AMERICANA 'PRINCETON'	PRINCETON AMERICAN ELM	80-90 mm CAL.	SPRING

SHRUB SCHEDULE

QUANTITY	BOTANICAL NAME	COMMON NAME	SIZE	SPACING	PLANT
5	CORNUS SERICEA 'BALYEI'	RED STEM DOGWOOD	#3 CONT.	SPACE 1.8 M O.C.	SPRING
2	HAMMAMELIS VIRGINIANA	WITCH HAZEL	#7 CONT.	SPACE 3.7 M O.C.	SPRING
2	ILEX VERTICILLATA 'JIM DANDY'	DWARF WINTERBERRY (MALE)	#3 CONT.	SPACE 900 mm O.C.	SPRING
13	ILEX VERTICILLATA 'RED SPRITE'	DWARF WINTERBERRY (FEMALE)	#3 CONT.	SPACE 900 mm O.C.	SPRING

* TWO MALE AND THIRTEEN FEMALE TO PROMOTE PROPER POLLINATION.

NOTES:
1. PLANTING SCHEDULES FOR PLANTED ISLANDS AND AMPHITHEATER ARE ON LANDSCAPE DETAILS SHEET LND-4.
2. ALL TREES ARE TO BE STAKED AND PLANTED SO TRUNK IS A MINIMUM OF 1M FROM EDGE OF ALL SIDEWALKS AND FROM SUBASE FOR FUTURE SIDEWALK (EAST OF STA 2+220 ON RTE 2) - SEE CROSS SECTIONS.
3. FINAL PLANTING LOCATION ARE TO BE APPROVED BY VTRANS PRIOR TO PLACEMENT OF LANDSCAPE BACKFILL AND INSTALLATION OF ALL TREES AND SHRUBS.
4. ALL PLANTS TO BE PLANTED IN SPRING.

REPLACEMENT SHEETS ISSUED 02/24/2012

STA 18+507.730 TO 18+600

DATUM

VERTICAL NAVD88
HORIZONTAL NAD83(92)

0 10 20
SCALE 1:250

Stantec

PROJECT NAME: DANVILLE
PROJECT NUMBER: F EGC 028-3(32)

FILE NAME: ...\Plotfiles\077 l101.ptf
DESIGN SUPERVISOR: GARY SANTY
DESIGNED BY: STANTEC
LANDSCAPE & LIGHTING PLAN LLP-1

PLOT DATE: 2/24/2012
DRAWN BY: STANTEC
CHECKED BY: STANTEC
SHEET 177 OF 306

2/24/2012 1:16:52 PM V:\1953\active\195300033_l092\Revised Plans\Plotfiles\077 l101.ptf

LANDSCAPE AND LIGHTING LEGEND

- PROPOSED CONIFEROUS — SHOWN AT APPROXIMATE 20-YEAR GROWTH SPREAD
- PROPOSED DECIDUOUS — SHOWN AT APPROXIMATE 20-YEAR GROWTH SPREAD
- EXISTING TREES
- LIGHTING LOCATIONS (ARROW SHOWS DISTRIBUTION DIRECTION)
- GRANITE POST LOCATIONS
- HANDHOLE
- LP — ROUTE 2 LIGHTING METER PEDESTAL SEE DETAIL ON LIGHTING DETAILS SHEET LTD-6
- GRN — DANVILLE GREEN METER PEDESTAL SEE DETAIL ON LIGHTING DETAILS SHEET LTD-6
- 3 / LND-3 — LANDSCAPING DETAIL SHEET
- LANDSCAPE BACKFILL
- WIRED CONDUIT (PVC) (50mm)
- ELECTRICAL CONDUIT SLEEVE (200mm) (PVC)

679.45 – LIGHT POLE

POLE NO.	LOCATION	FIXTURE TYPE	WATTS	TYPE	MOUNTING HEIGHT
SL-20	18+765.00, 5.70M RT	B	175	III	5.48M

678.26 – JUNCTION BOX

HAND HOLE NO.	LOCATION
HH-3	18+713.00, 5.70M RT.

656.80 – LANDSCAPE BACKFILL, TRUCK MEASUREMENT

STA.	LENGTH X WIDTH X DEPTH
18+600.0 - 18+601 RT	1M X 3M X 0.5M
18+618.5 - 18+635 RT	16.5M X 3M X 0.5M

656.30 – DECIDUOUS TREES

STA.	NO.	LOCATION	DESCRIPTION
18+621.3	1	RT	JAPANESE TREE LILAC
18+618.6 - 18+660.9	3	LT	JAPANESE TREE LILAC
18+677.7 - 18+760.5	6	RT	RED OAK

656.20 – EVERGREEN TREES

STA.	NO.	LOCATION	DESCRIPTION
18+625.7 - 18+634.1	3	RT	WHITE SPRUCE

651.40 – GRUBBING MATERIAL

STA.
18+673 - 18+770 RT

VT STATE PLANE GRID N

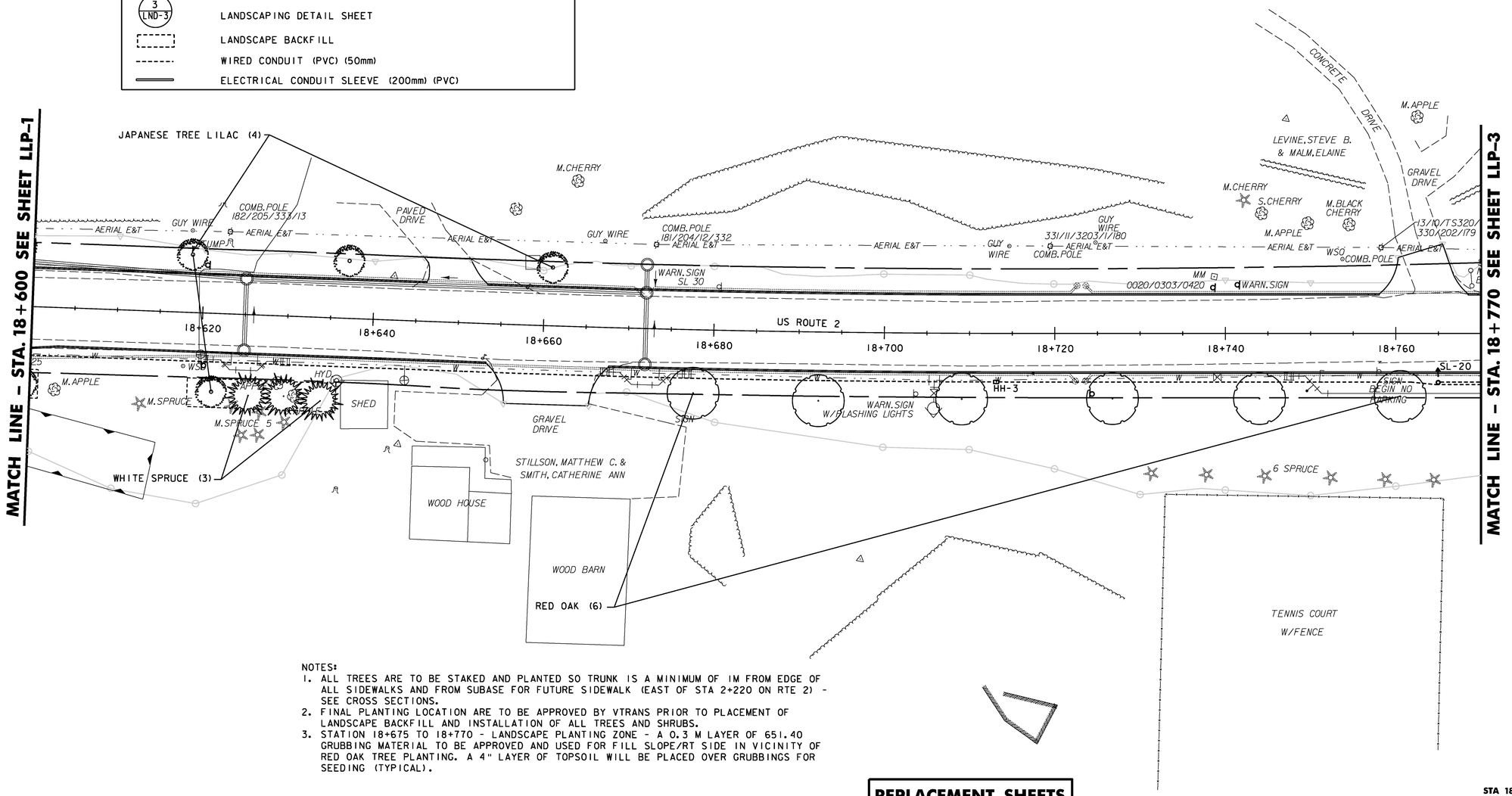

NOTES:
1. ALL TREES ARE TO BE STAKED AND PLANTED SO TRUNK IS A MINIMUM OF 1M FROM EDGE OF ALL SIDEWALKS AND FROM SUBASE FOR FUTURE SIDEWALK (EAST OF STA 2+220 ON RTE 2) - SEE CROSS SECTIONS.
2. FINAL PLANTING LOCATION ARE TO BE APPROVED BY VTRANS PRIOR TO PLACEMENT OF LANDSCAPE BACKFILL AND INSTALLATION OF ALL TREES AND SHRUBS.
3. STATION 18+675 TO 18+770 - LANDSCAPE PLANTING ZONE - A 0.3 M LAYER OF 651.40 GRUBBING MATERIAL TO BE APPROVED AND USED FOR FILL SLOPE/RT SIDE IN VICINITY OF RED OAK TREE PLANTING. A 4" LAYER OF TOPSOIL WILL BE PLACED OVER GRUBBINGS FOR SEEDING (TYPICAL).

REPLACEMENT SHEETS ISSUED 02/24/2012

0 10 20
SCALE 1:250

DATUM

VERTICAL	NAVD88
HORIZONTAL	NAD83(92)

STA 18+600 TO 18+770

PROJECT NAME:	DANVILLE
PROJECT NUMBER:	F EGC 028-3(32)
FILE NAME: ...\PlotFiles\078 1102.ptf	PLOT DATE: 2/24/2012
DESIGN SUPERVISOR: GARY SANTY	DRAWN BY: STANTEC
DESIGNED BY: STANTEC	CHECKED BY: STANTEC
LANDSCAPE & LIGHTING PLAN LLP-2	SHEET 178 OF 306

Stantec

2/24/2012 3:16:53 PM V:\1853\active\185310033.0092\Revised Plans\PlotFiles\078 1102.ptf

LANDSCAPE AND LIGHTING LEGEND

- PROPOSED CONIFEROUS — SHOWN AT APPROXIMATE 20-YEAR GROWTH SPREAD
- PROPOSED DECIDUOUS — SHOWN AT APPROXIMATE 20-YEAR GROWTH SPREAD
- EXISTING TREES
- LIGHTING LOCATIONS (ARROW SHOWS DISTRIBUTION DIRECTION)
- GRANITE POST LOCATIONS
- HANDHOLE
- LP — ROUTE 2 LIGHTING METER PEDESTAL SEE DETAIL ON LIGHTING DETAILS SHEET LTD-6
- GRN — DANVILLE GREEN METER PEDESTAL SEE DETAIL ON LIGHTING DETAILS SHEET LTD-6
- 3 / LND-3 — LANDSCAPING DETAIL SHEET
- LANDSCAPE BACKFILL
- WIRED CONDUIT (PVC) (50mm)
- ELECTRICAL CONDUIT SLEEVE (200mm) (PVC)

679.45 – LIGHT POLE

POLE NO.	LOCATION	FIXTURE TYPE	WATTS	MOUNTING TYPE	MOUNTING HEIGHT
SL-22	18+801.00, 5.70M RT	B	175	III	5.48M
SL-24	18+839.00, 6.63M RT	B	175	III	5.48M
SL-26	18+878.00, 6.63M RT	B	175	III	5.48M
SL-28	18+896.00, 6.63M RT	B	175	III	5.48M
SL-30	18+919.00, 6.63M RT	B	175	III	5.48M
SL-31	18+924.50, 6.88M LT	B	175	III	5.48M

678.26 – JUNCTION BOX

HAND HOLE NO.	LOCATION
HH-4	18+815.50, 6.96M RT
HH-5	18+924.50, 7.36M RT

656.30 – DECIDUOUS TREES

STA.	NO.	LOCATION	DESCRIPTION
18+778.1	1	RT	RED OAK
18+792.8 - 18+807.0	4 ~~2~~	RT	GREEN MOUNTAIN SUGAR MAPLE
18+793.8 - 18+873.3	5	RT	PRINCETON AMERICAN ELM
18+866.1 - 18+883.1	5	LT	JAPANESE TREE LILAC
18+888.6 - 18+898.5	2	RT	ARMSTRONG FREEMAN MAPLE
18+920.5	1	LT	PRINCETON AMERICAN ELM
18+924.5	1	RT	COMMON HACKBERRY

900.620 – SPECIAL PROVISION (GRANITE POST) – SEE NOTE 2

STA.	LOCATION	DESCRIPTION
18+925.5	RT	GRANITE POST #6
18+928.4	RT	GRANITE POST #5
18+925.5	LT	GRANITE POST #7
18+928.4	LT	GRANITE POST #8

679.25 – REMOVING AND RESETTING LIGHT POLE

STA.	LOCATION
18+921.8 TO 18+919.8	RT

678.30 – ELECTRICAL CONDUIT SLEEVE (200mm)(PVC)

STA.	LOCATION
18+924.7	LT - RT

651.40 – GRUBBING MATERIAL

STA.	LOCATION
18+770 TO 18+783	RT

900.640 – SPECIAL PROVISION (GRANITE POST AND WOOD DIAMOND RAIL FENCE)

STA.	LOCATION
18+787.5 - 18+798.2	RT
18+804.3 - 18+903.2	RT
18+908.6 - 18+913.7	RT
18+917.2 - 18+920.5	RT

656.80 – LANDSCAPE BACKFILL, TRUCK MEASUREMENT

STA.	LENGTH X WIDTH X DEPTH
1+003 TO 1+018 RT	15M x 10M x 0.5M

DATUM

VERTICAL NAVD88
HORIZONTAL NAD83(92)

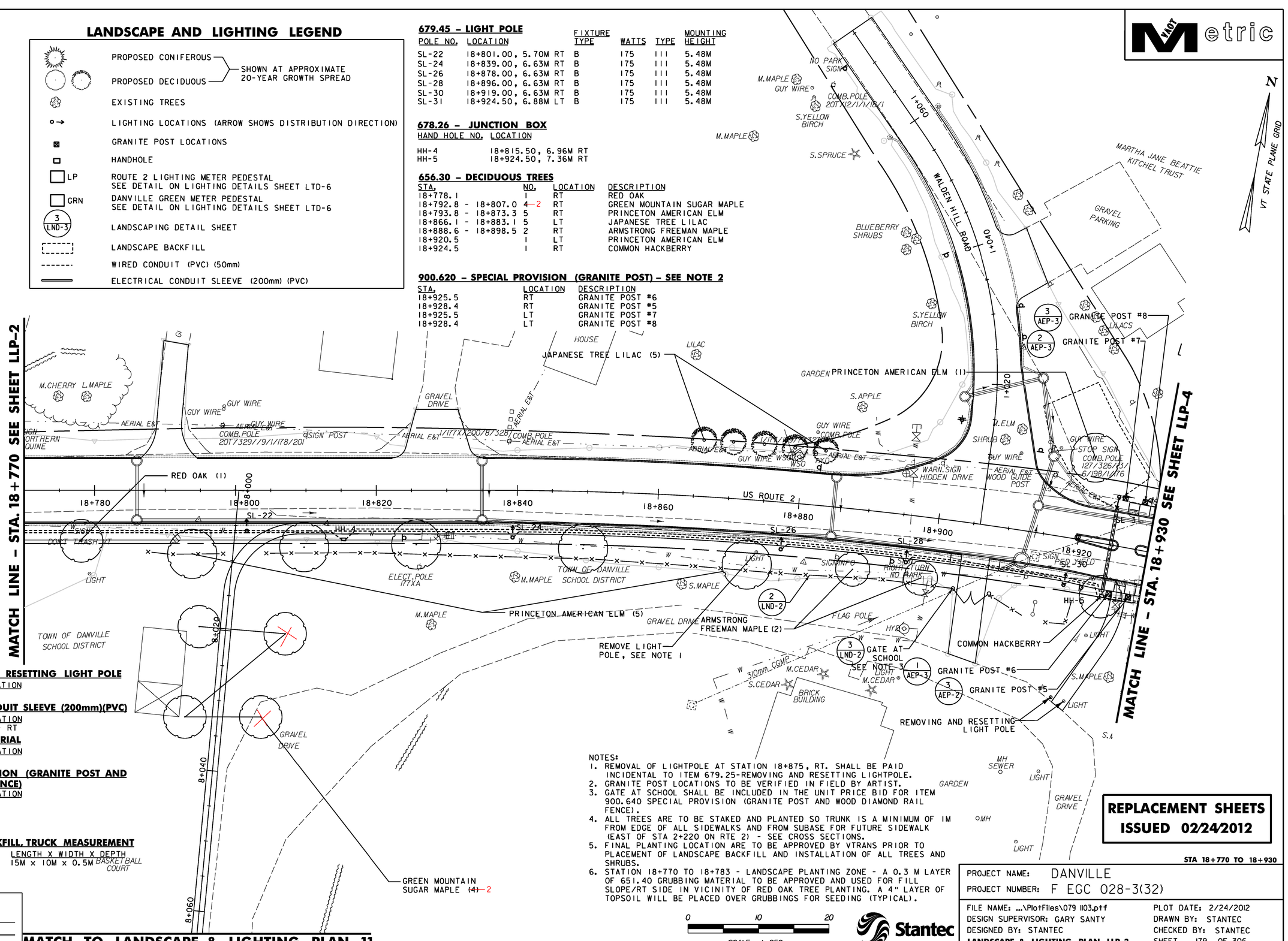

NOTES:
1. REMOVAL OF LIGHTPOLE AT STATION 18+875, RT. SHALL BE PAID INCIDENTAL TO ITEM 679.25-REMOVING AND RESETTING LIGHTPOLE.
2. GRANITE POST LOCATIONS TO BE VERIFIED IN FIELD BY ARTIST.
3. GATE AT SCHOOL SHALL BE INCLUDED IN THE UNIT PRICE BID FOR ITEM 900.640 SPECIAL PROVISION (GRANITE POST AND WOOD DIAMOND RAIL FENCE).
4. ALL TREES ARE TO BE STAKED AND PLANTED SO TRUNK IS A MINIMUM OF 1M FROM EDGE OF ALL SIDEWALKS AND FROM SUBASE FOR FUTURE SIDEWALK (EAST OF STA 2+220 ON RTE 2) - SEE CROSS SECTIONS.
5. FINAL PLANTING LOCATION ARE TO BE APPROVED BY VTRANS PRIOR TO PLACEMENT OF LANDSCAPE BACKFILL AND INSTALLATION OF ALL TREES AND SHRUBS.
6. STATION 18+770 TO 18+783 - LANDSCAPE PLANTING ZONE - A 0.3 M LAYER OF 651.40 GRUBBING MATERIAL TO BE APPROVED AND USED FOR FILL SLOPE/RT SIDE IN VICINITY OF RED OAK TREE PLANTING. A 4" LAYER OF TOPSOIL WILL BE PLACED OVER GRUBBINGS FOR SEEDING (TYPICAL).

0 10 20
SCALE 1:250

REPLACEMENT SHEETS ISSUED 02/24/2012

STA 18+770 TO 18+930

PROJECT NAME: DANVILLE
PROJECT NUMBER: F EGC 028-3(32)

FILE NAME: ...\PlotFiles\079 1103.ptf
DESIGN SUPERVISOR: GARY SANTY
DESIGNED BY: STANTEC
LANDSCAPE & LIGHTING PLAN LLP-3
PLOT DATE: 2/24/2012
DRAWN BY: STANTEC
CHECKED BY: STANTEC
SHEET 179 OF 306

MATCH TO LANDSCAPE & LIGHTING PLAN 11

2/24/2012 4:16:54 PM V:\1953\active\195300033.0192\Revised Plans\PlotFiles\079 1103.ptf

LANDSCAPE AND LIGHTING LEGEND

- PROPOSED CONIFEROUS
- PROPOSED DECIDUOUS — SHOWN AT APPROXIMATE 20-YEAR GROWTH SPREAD
- EXISTING TREES
- LIGHTING LOCATIONS (ARROW SHOWS DISTRIBUTION DIRECTION)
- GRANITE POST LOCATIONS
- HANDHOLE
- LP — ROUTE 2 LIGHTING METER PEDESTAL SEE DETAIL ON LIGHTING DETAILS SHEET LTD-6
- GRN — DANVILLE GREEN METER PEDESTAL SEE DETAIL ON LIGHTING DETAILS SHEET LTD-6
- 3 / LND-3 — LANDSCAPING DETAIL SHEET
- LANDSCAPE BACKFILL
- WIRED CONDUIT (PVC) (50mm)
- ELECTRICAL CONDUIT SLEEVE (200mm) (PVC)

679.45 – LIGHT POLE

POLE NO.	LOCATION	FIXTURE TYPE	WATTS	TYPE	MOUNTING HEIGHT
SL-32	18+931.00, 6.86M RT	B	175	III	5.48M
SL-34	18+965.00, 6.63M RT	B	175	III	5.48M
SL-36	18+990.00, 6.63M RT	B	175	III	5.48M
SL-38	19+011.50, 6.63M RT	B	175	III	5.48M
SL-40	19+035.50, 6.63M RT	B	175	III	5.48M
SL-42	19+057.50, 6.63M RT	B	175	III	5.48M

678.26 – JUNCTION BOX

HAND HOLE NO.	LOCATION
HH-10	19+020.6, 6.93M RT

656.30 – DECIDUOUS TREES

STA.	NO.	LOCATION	DESCRIPTION
18+937.2	1	RT	COMMON HACKBERRY
18+937.2 - 18+946.9	2	LT	COMMON HACKBERRY
~~18+971.0~~	~~1~~	~~RT~~	~~LITTLE KING RIVERBIRCH~~
18+975.1 - 18+985.4	2	LT	RED OAK
19+007.9 - 19+043.0	3	LT	~~AMERICAN HOPHORNBEAM~~ AUTUMN BLAZE MAPLES
~~19+013.0 - 19+025.0~~	~~2~~	RT	19+000 JAPANESE TREE LILAC
19+067.8	1	LT	GREEN MOUNTAIN SUGAR MAPLE

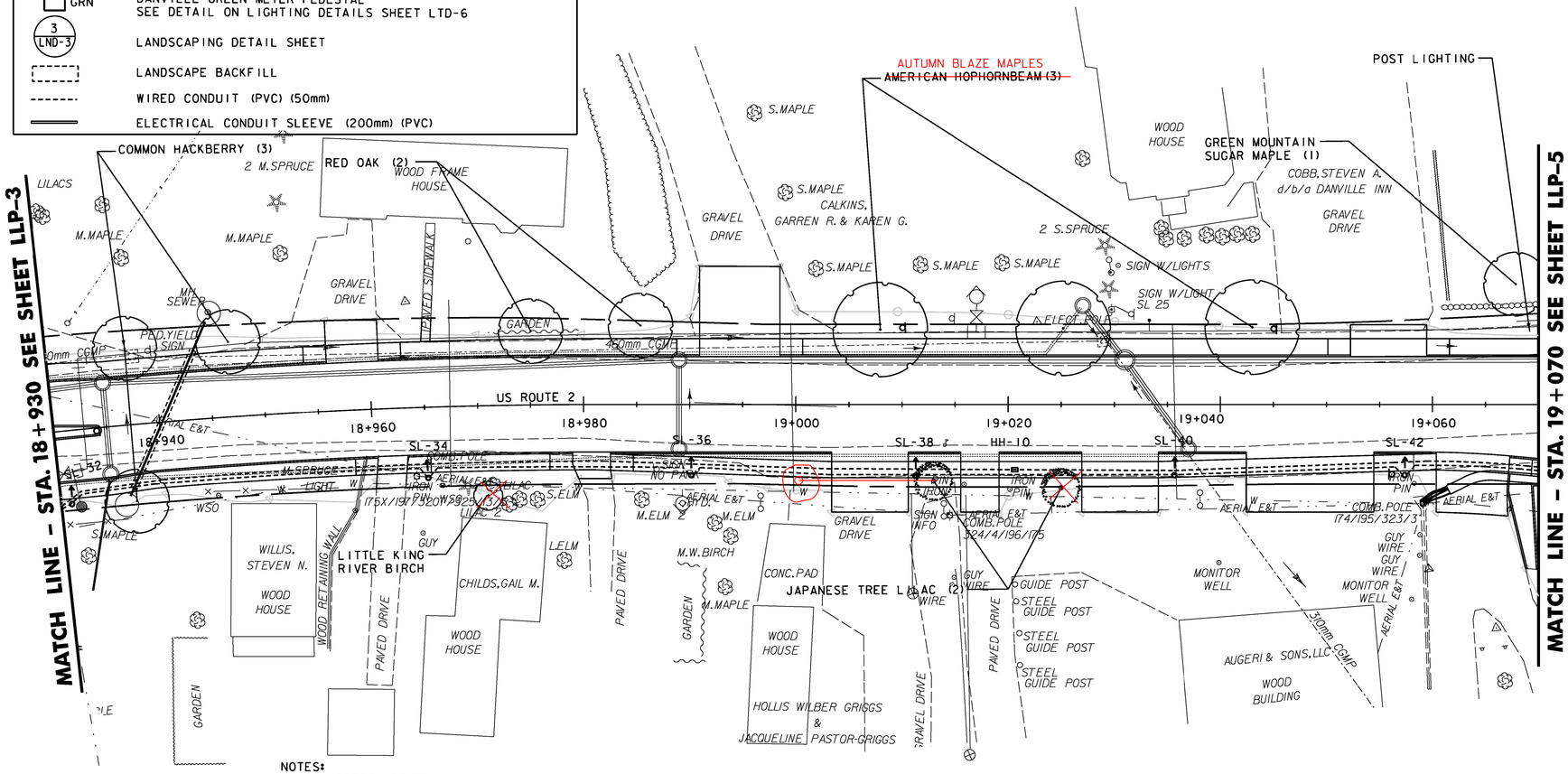

NOTES:
1. ALL TREES ARE TO BE STAKED AND PLANTED SO TRUNK IS A MINIMUM OF 1M FROM EDGE OF ALL SIDEWALKS AND FROM SUBASE FOR FUTURE SIDEWALK (EAST OF STA 2+220 ON RTE 2) - SEE CROSS SECTIONS.
2. FINAL PLANTING LOCATION ARE TO BE APPROVED BY VTRANS PRIOR TO PLACEMENT OF LANDSCAPE BACKFILL AND INSTALLATION OF ALL TREES AND SHRUBS.

REPLACEMENT SHEETS ISSUED 02/24/2012

DATUM
VERTICAL NAVD88
HORIZONTAL NAD83(92)

0 10 20
SCALE 1:250

Stantec

STA 18+930 TO 19+070

PROJECT NAME: DANVILLE
PROJECT NUMBER: F EGC 028-3(32)

FILE NAME: ...\PlotFiles\080 1104.ptf
DESIGN SUPERVISOR: GARY SANTY
DESIGNED BY: STANTEC
LANDSCAPE & LIGHTING PLAN LLP-4
PLOT DATE: 2/24/2012
DRAWN BY: STANTEC
CHECKED BY: STANTEC
SHEET 180 OF 306

2/24/2012 1:16:55 PM V:\1953\active\195310033_1092\Revised Plans\PlotFiles\080 1104.ptf

LANDSCAPE AND LIGHTING LEGEND

- PROPOSED CONIFEROUS — SHOWN AT APPROXIMATE 20-YEAR GROWTH SPREAD
- PROPOSED DECIDUOUS — SHOWN AT APPROXIMATE 20-YEAR GROWTH SPREAD
- EXISTING TREES
- LIGHTING LOCATIONS (ARROW SHOWS DISTRIBUTION DIRECTION)
- GRANITE POST LOCATIONS
- HANDHOLE
- LP — ROUTE 2 LIGHTING METER PEDESTAL SEE DETAIL ON LIGHTING DETAILS SHEET LTD-6
- GRN — DANVILLE GREEN METER PEDESTAL SEE DETAIL ON LIGHTING DETAILS SHEET LTD-6
- 3 / LND-3 — LANDSCAPING DETAIL SHEET
- LANDSCAPE BACKFILL
- WIRED CONDUIT (PVC) (50mm)
- ELECTRICAL CONDUIT SLEEVE (200mm) (PVC)

900.620 – SPECIAL PROVISION (GRANITE POST) – SEE NOTE 2

STA.	LOCATION	DESCRIPTION
19+114.0	LT	GRANITE POST #9
19+162.7	RT	GRANITE POST #12
19+157.5	RT	GRANITE POST #13
19+164.9	RT	GRANITE POST #11
19+219.7	RT	GRANITE POST #21

656.30 – DECIDUOUS TREES

STA.	NO.	LOCATION	DESCRIPTION
19+078.9	1	LT	GREEN MOUNTAIN SUGAR MAPLE
19+144.4 - 19+154.8	2	RT	RED OAK
19+197.3 - 19+208.3	2	RT	RED OAK
19+234.3 - 19+242.3	2	LT	PRINCETON SENTRY GINKO
19+235.5	1	RT	RED OAK
19+258.8	1	LT	RED OAK
~~19+092.2~~	1	RT	~~THORNLESS COCKSPUR HAWTHORN~~

656.20 – EVERGREEN TREES

STA.	NO.	LOCATION	DESCRIPTION
19+202.8	1	RT	WHITE SPRUCE

678.26 – JUNCTION BOX

HAND HOLE NO.	LOCATION
HH-6	19+118.00, 10.13M LT
HH-G2	19+116.50, 15.65M RT
HH-12	19+118.00, 12.68M RT
HH-G1	19+132.50, 13.40M RT
HH-14	19+133.00, 12.17M RT
HH-18	4+024.00, 6.54M RT
HH-20	4+024.50, 5.61M LT
HH-G3	4+024.50, 7.36M RT
HH-G5	4+025.50, 6.30M LT
HH-7	19+192.00, 5.35M LT
HH-22	5+017.50, 3.54M RT
HH-24	5+017.50, 5.88M LT

679.45 – LIGHT POLE

POLE NO.	LOCATION	FIX. TYPE	WATTS	TYPE	MOUNT. HEIGHT	VR	R
SL-41	19+092.35, 7.71M LT	B	175	III	5.48M	NO	NO
SL-43	19+118.00, 11.49M LT	B	175	III	5.48M	NO	NO
SL-44	19+091.50, 8.76M RT	B	175	III	5.48M	NO	NO
SL-45	19+142.50, 12.19M LT	B	175	III	5.48M	NO	NO
SL-46	19+114.00, 10.24 RT	B	175	III	5.48M	NO	NO
SL-47	19+164.30, 10.52M LT	M	175	III	5.48M	NO	NO
SL-48	19+137.50, 10.84M RT	B	175	III	5.48M	Y	Y
SL-49	19+183.94, 11.73M LT	B	175	III	5.48M	NO	NO
SL-50	19+158.00, 12.24M RT	B	175	III	5.48M	Y	Y
SL-51	19+189.03, 5.34M LT	B	175	III	5.48M	NO	NO
SL-52	19+169.03, 20.98M RT	M	175	III	5.48M	NO	NO
SL-53	19+216.50, 6.63M LT	B	175	III	5.48M	NO	NO
MA-2	19+185.60, 18.21M RT	M	175	III	5.48M	NO	NO
SL-55	19+238.80, 6.63M LT	B	175	III	5.48M	NO	NO
SL-56	19+198.00, 13.25M RT	B	175	III	5.48M	Y	Y
SL-58	19+218.00, 12.45M RT	B	175	III	5.48M	Y	Y
SL-60	19+237.00, 7.94M RT	B	175	III	5.48M	NO	NO
PM-1	4+033.50, 6.03M LT	A	100	III	4.27M	Y	Y
SM-1	5+021.50, 3.60M RT	A	100	III	4.27M	NO	NO

678.30 – ELECTRICAL CONDUIT SLEEVE (200mm)(PVC)

STA.

2+012.3, RT - 2+011.9, LT
2+012.4, RT - LT
2+012.6, RT - LT
2+012.9, RT - 2+013.5, LT
19+117.8, LT - 19+118.0, RT
19+188.9, RT - 19+190.4, LT
4+024.0, RT - 4+024.5, LT
4+024.3, RT - 4+024.7, LT
4+024.5, RT - 4+024.9, LT
4+024.8, RT - 4+025.2, LT
5+017.4, RT - 5+017.4, LT

900.645 – SPECIAL PROVISION (WATER TROUGH AND STAIRS)

STA.

19+163.0, RT

900.645 – SPECIAL PROVISION (DANVILLE CIRCLE)

STA.

19+197.2, RT

900.620 – SPECIAL PROVISION (FROST-FREE MANHOLE) – SEE NOTE 3

STA.

19+157.1, RT
4+021.1, RT

NOTES:

1. SEE LANDSCAPING DETAILS SHEET LND-4 FOR PLANTED ISLANDS AND AMPHITHEATRE PLANTING SCHEDULES.
2. GRANITE POST LOCATIONS TO BE VERIFIED IN FIELD BY ARTIST.
3. SEE FIRE DISTRICT WATER PLAN FD-13 FOR FROST-FREE MANHOLE DETAIL.
4. SL-47, SL-52 AND SHALL BE MOUNTED ON TRAFFIC SIGNAL POLES. SEE LIGHTING DETAILS SHEET LTD-2.
5. ALL TREES ARE TO BE STAKED AND PLANTED SO TRUNK IS A MINIMUM OF 1M FROM EDGE OF ALL SIDEWALKS AND FROM SUBASE FOR FUTURE SIDEWALK (EAST OF STA 2+220 ON RTE 2) - SEE CROSS SECTIONS.
6. FINAL PLANTING LOCATION ARE TO BE APPROVED BY VTRANS PRIOR TO PLACEMENT OF LANDSCAPE BACKFILL AND INSTALLATION OF ALL TREES AND SHRUBS.

REPLACEMENT SHEETS ISSUED 02/24/2012

STA 19+070 TO 19+260

DATUM

VERTICAL NAVD88
HORIZONTAL NAD83(92)

SCALE 1:250

PROJECT NAME:	DANVILLE
PROJECT NUMBER:	F EGC 028-3(32)
FILE NAME: ...\PlotFiles\0811105.ptf	PLOT DATE: 2/24/2012
DESIGN SUPERVISOR: GARY SANTY	DRAWN BY: STANTEC
DESIGNED BY: STANTEC	CHECKED BY: STANTEC
LANDSCAPE & LIGHTING PLAN LLP-5	SHEET 181 OF 306

2/24/2012 11:55:55 PM V:\1953\active\19530033_1092\Revised Plans\Plot Files\0811105.ptf

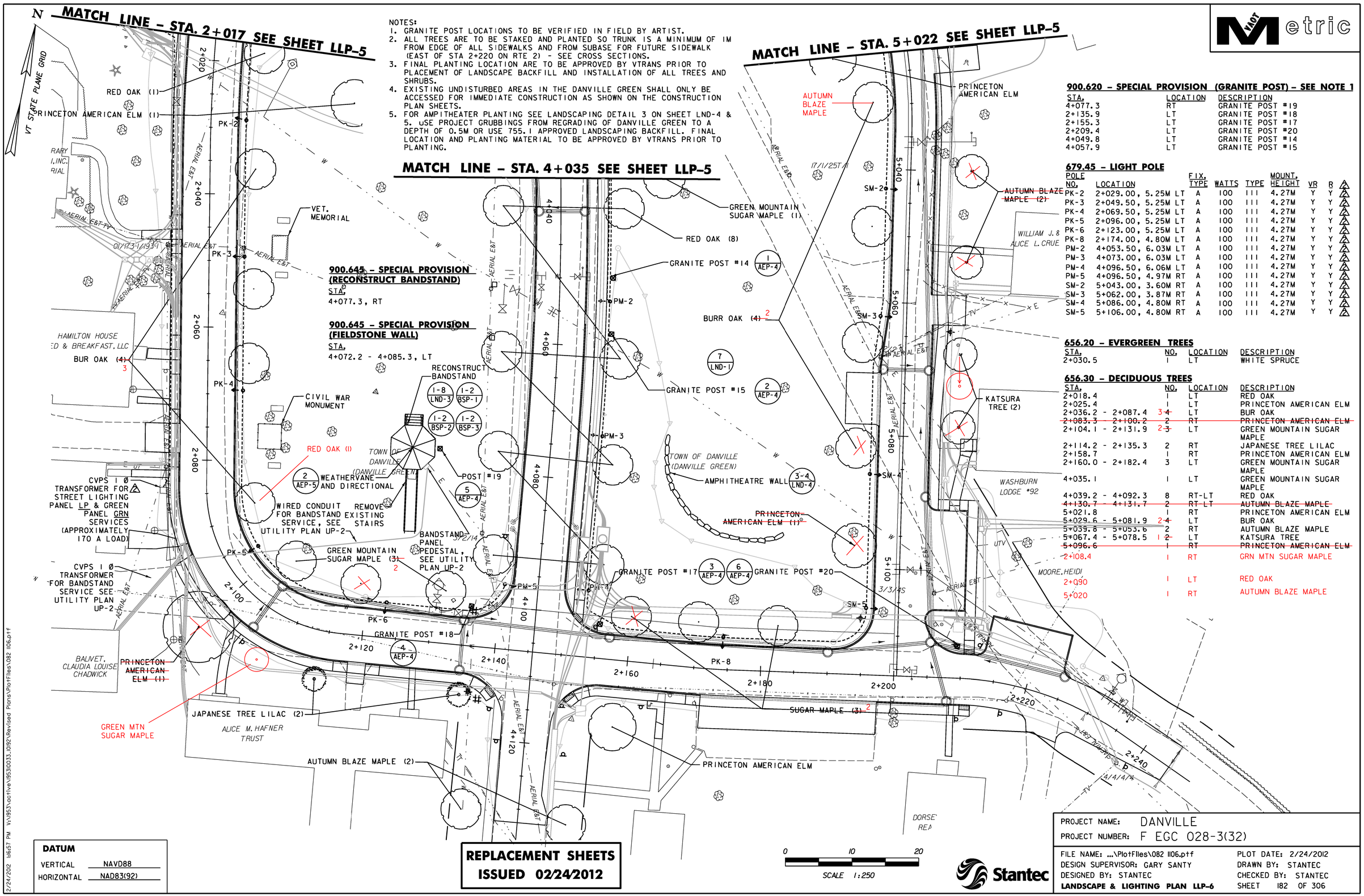

NOTES:
1. GRANITE POST LOCATIONS TO BE VERIFIED IN FIELD BY ARTIST.
2. ALL TREES ARE TO BE STAKED AND PLANTED SO TRUNK IS A MINIMUM OF 1M FROM EDGE OF ALL SIDEWALKS AND FROM SUBASE FOR FUTURE SIDEWALK (EAST OF STA 2+220 ON RTE 2) - SEE CROSS SECTIONS.
3. FINAL PLANTING LOCATION ARE TO BE APPROVED BY VTRANS PRIOR TO PLACEMENT OF LANDSCAPE BACKFILL AND INSTALLATION OF ALL TREES AND SHRUBS.
4. EXISTING UNDISTURBED AREAS IN THE DANVILLE GREEN SHALL ONLY BE ACCESSED FOR IMMEDIATE CONSTRUCTION AS SHOWN ON THE CONSTRUCTION PLAN SHEETS.
5. FOR AMPITHEATER PLANTING SEE LANDSCAPING DETAIL 3 ON SHEET LND-4 & 5. USE PROJECT GRUBBINGS FROM REGRADING OF DANVILLE GREEN TO A DEPTH OF 0.5M OR USE 755.1 APPROVED LANDSCAPING BACKFILL. FINAL LOCATION AND PLANTING MATERIAL TO BE APPROVED BY VTRANS PRIOR TO PLANTING.

900.645 - SPECIAL PROVISION (RECONSTRUCT BANDSTAND)
STA.
4+077.3, RT

900.645 - SPECIAL PROVISION (FIELDSTONE WALL)
STA.
4+072.2 - 4+085.3, LT

900.620 - SPECIAL PROVISION (GRANITE POST) - SEE NOTE 1

STA.	LOCATION	DESCRIPTION
4+077.3	RT	GRANITE POST #19
2+135.9	LT	GRANITE POST #18
2+155.3	LT	GRANITE POST #17
2+209.4	LT	GRANITE POST #20
4+049.8	LT	GRANITE POST #14
4+057.9	LT	GRANITE POST #15

679.45 - LIGHT POLE

POLE NO.	LOCATION	FIX. TYPE	WATTS	TYPE	MOUNT. HEIGHT	VR	R
PK-2	2+029.00, 5.25M LT	A	100	III	4.27M	Y	Y
PK-3	2+049.50, 5.25M LT	A	100	III	4.27M	Y	Y
PK-4	2+069.50, 5.25M LT	A	100	III	4.27M	Y	Y
PK-5	2+096.00, 5.25M LT	A	100	III	4.27M	Y	Y
PK-6	2+123.00, 5.25M LT	A	100	III	4.27M	Y	Y
PK-8	2+174.00, 4.80M LT	A	100	III	4.27M	Y	Y
PM-2	4+053.50, 6.03M LT	A	100	III	4.27M	Y	Y
PM-3	4+073.00, 6.03M LT	A	100	III	4.27M	Y	Y
PM-4	4+096.50, 6.06M LT	A	100	III	4.27M	Y	Y
PM-5	4+096.50, 4.97M RT	A	100	III	4.27M	Y	Y
SM-2	5+043.00, 3.60M RT	A	100	III	4.27M	Y	Y
SM-3	5+062.00, 3.87M RT	A	100	III	4.27M	Y	Y
SM-4	5+086.00, 4.80M RT	A	100	III	4.27M	Y	Y
SM-5	5+106.00, 4.80M RT	A	100	III	4.27M	Y	Y

656.20 - EVERGREEN TREES

STA.	NO.	LOCATION	DESCRIPTION
2+030.5	1	LT	WHITE SPRUCE

656.30 - DECIDUOUS TREES

STA.	NO.	LOCATION	DESCRIPTION
2+018.4	1	LT	RED OAK
2+025.4	1	LT	PRINCETON AMERICAN ELM
2+036.2 - 2+087.4	3 ~~4~~	LT	BUR OAK
~~2+083.3 - 2+100.2~~	~~2~~	~~RT~~	~~PRINCETON AMERICAN ELM~~
2+104.1 - 2+131.9	2 ~~3~~	LT	GREEN MOUNTAIN SUGAR MAPLE
2+114.2 - 2+135.3	2	RT	JAPANESE TREE LILAC
2+158.7	1	RT	PRINCETON AMERICAN ELM
2+160.0 - 2+182.4	3	LT	GREEN MOUNTAIN SUGAR MAPLE
4+035.1	1	LT	GREEN MOUNTAIN SUGAR MAPLE
4+039.2 - 4+092.3	8	RT-LT	RED OAK
~~4+130.7 - 4+131.7~~	~~2~~	~~RT-LT~~	~~AUTUMN BLAZE MAPLE~~
5+021.8	1	RT	PRINCETON AMERICAN ELM
5+029.6 - 5+081.9	2 ~~4~~	LT	BUR OAK
5+039.8 - 5+053.6	2	RT	AUTUMN BLAZE MAPLE
5+067.4 - 5+078.5	1 ~~2~~	LT	KATSURA TREE
~~5+096.6~~	~~1~~	~~RT~~	~~PRINCETON AMERICAN ELM~~
2+108.4	1	RT	GRN MTN SUGAR MAPLE
2+090	1	LT	RED OAK
5+020	1	RT	AUTUMN BLAZE MAPLE

DATUM
VERTICAL NAVD88
HORIZONTAL NAD83(92)

REPLACEMENT SHEETS ISSUED 02/24/2012

0 10 20
SCALE 1:250

Stantec

PROJECT NAME: DANVILLE
PROJECT NUMBER: F EGC 028-3(32)
FILE NAME: ...\Plotfiles\082 1106.ptf
DESIGN SUPERVISOR: GARY SANTY
DESIGNED BY: STANTEC
LANDSCAPE & LIGHTING PLAN LLP-6
PLOT DATE: 2/24/2012
DRAWN BY: STANTEC
CHECKED BY: STANTEC
SHEET 182 OF 306

2/24/2012 11:6:57 PM V:\1953\active\19531033.1092\Revised Plans\Plotfiles\082 1106.ptf

LANDSCAPE AND LIGHTING LEGEND

- PROPOSED CONIFEROUS — SHOWN AT APPROXIMATE 20-YEAR GROWTH SPREAD
- PROPOSED DECIDUOUS — SHOWN AT APPROXIMATE 20-YEAR GROWTH SPREAD
- EXISTING TREES
- LIGHTING LOCATIONS (ARROW SHOWS DISTRIBUTION DIRECTION)
- GRANITE POST LOCATIONS
- HANDHOLE
- LP — ROUTE 2 LIGHTING METER PEDESTAL SEE DETAIL ON LIGHTING DETAILS SHEET LTD-6
- GRN — DANVILLE GREEN METER PEDESTAL SEE DETAIL ON LIGHTING DETAILS SHEET LTD-6
- 3 / LND-3 — LANDSCAPING DETAIL SHEET
- LANDSCAPE BACKFILL
- WIRED CONDUIT (PVC) (50mm)
- ELECTRICAL CONDUIT SLEEVE (200mm) (PVC)

679.45 – LIGHT POLE

POLE NO.	LOCATION	FIXTURE TYPE	WATTS	TYPE	MOUNTING HEIGHT
SL-57	19+262.50, 6.63M LT	B	175	III	5.48M
SL-59	19+281.50, 6.63M LT	B	175	III	5.48M
SL-61	19+326.00, 6.63M LT	B	175	III	5.48M
SL-63	19+353.50, 6.63M LT	B	175	III	5.48M
SL-65	19+383.00, 6.63M LT	B	175	III	5.48M
SL-67	19+411.00, 6.63M LT	B	175	III	5.48M
SL-69	19+427.00, 8.70M LT	B	175	III	5.48M
SL-70	19+441.50, 6.51M RT	B	175	III	5.48M

678.26 – JUNCTION BOX

HAND HOLE NO.	LOCATION
HH-9	19+312.00, 5.50M LT
HH-11	19+428.00, 8.71M LT
HH-13	19+442.00, 8.54M LT
HH-34	19+443.50, 6.40M RT

678.30 – ELECTRICAL CONDUIT SLEEVE (200mm)(PVC)

STA.
6+008.4, RT - 6+008.9, LT
19+442.3, LT - 19+443.2, RT

656.30 – DECIDUOUS TREES

STA.	NO.	LOCATION	DESCRIPTION
19+264.9 - 19+316.4	~~3~~ 2	RT	AMERICAN HORNBEAM
~~19+279.4~~	~~1~~	~~LT~~	~~RED OAK~~
~~19+323.0~~	~~1~~	~~LT~~	~~SERVICEBERRY~~
19+323 ~~19+340.5~~ - 19+366.4	~~2~~ 3	LT	PRINCETON AMERICAN ELM
19+346.3 - 19+371.1	3	RT	SERVICEBERRY
19+414.4	1	LT	AUTUMN BLAZE MAPLE
19+295	1	LT	AUTUMN BLAZE MAPLE

656.35 – DECIDUOUS SHRUBS

STA.	NO.	LOCATION	DESCRIPTION
19+416.9 - 19+419.8	2	RT	WITCH HAZEL
19+417.1 - 19+420.7	5	RT	REDSTEM DOGWOOD
19+423.3 - 19+426.8	15	RT	DWARF WINTERBERRY

900.620 – SPECIAL PROVISION (GRANITE POST)

STA.	LOCATION	DESCRIPTION
19+426.4	LT	GRANITE POST #22

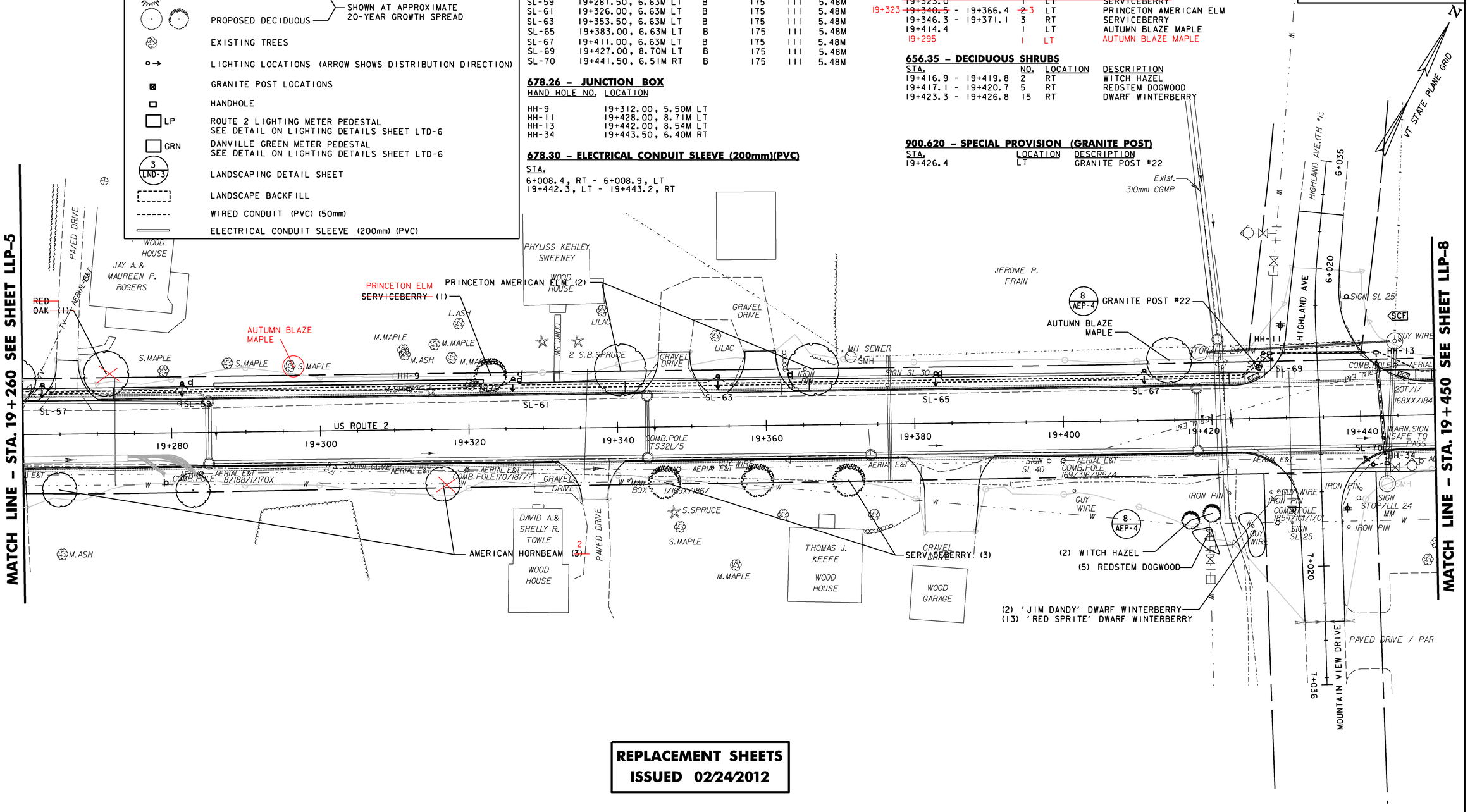

REPLACEMENT SHEETS ISSUED 02/24/2012

STA 19+260 TO 19+450

DATUM

VERTICAL	NAVD88
HORIZONTAL	NAD83(92)

NOTES:
1. ALL TREES ARE TO BE STAKED AND PLANTED SO TRUNK IS A MINIMUM OF 1M FROM EDGE OF ALL SIDEWALKS AND FROM SUBASE FOR FUTURE SIDEWALK (EAST OF STA 2+220 ON RTE 2) - SEE CROSS SECTIONS.
2. FINAL PLANTING LOCATION ARE TO BE APPROVED BY VTRANS PRIOR TO PLACEMENT OF LANDSCAPE BACKFILL AND INSTALLATION OF ALL TREES AND SHRUBS.

0 10 20
SCALE 1:250

Stantec

PROJECT NAME:	DANVILLE
PROJECT NUMBER:	F EGC 028-3(32)
FILE NAME: ...\PlotFiles\083 1107.ptf	PLOT DATE: 2/24/2012
DESIGN SUPERVISOR: GARY SANTY	DRAWN BY: STANTEC
DESIGNED BY: STANTEC	CHECKED BY: STANTEC
LANDSCAPE & LIGHTING PLAN LLP-7	SHEET 183 OF 306

2/24/2012 11:6:58 PM V:\1953\active\195300033.0092\Revised Plans\PlotFiles\083 1107.ptf

LANDSCAPE AND LIGHTING LEGEND

- PROPOSED CONIFEROUS — SHOWN AT APPROXIMATE 20-YEAR GROWTH SPREAD
- PROPOSED DECIDUOUS — SHOWN AT APPROXIMATE 20-YEAR GROWTH SPREAD
- EXISTING TREES
- LIGHTING LOCATIONS (ARROW SHOWS DISTRIBUTION DIRECTION)
- GRANITE POST LOCATIONS
- HANDHOLE
- LP — ROUTE 2 LIGHTING METER PEDESTAL SEE DETAIL ON LIGHTING DETAILS SHEET LTD-6
- GRN — DANVILLE GREEN METER PEDESTAL SEE DETAIL ON LIGHTING DETAILS SHEET LTD-6
- 3 / LND-3 — LANDSCAPING DETAIL SHEET
- LANDSCAPE BACKFILL
- WIRED CONDUIT (PVC) (50mm)
- ELECTRICAL CONDUIT SLEEVE (200mm) (PVC)

678.26 – JUNCTION BOX

HAND HOLE NO.	LOCATION
HH-15	19+523.50, 6.39M LT

656.30 – DECIDUOUS TREES

STA.	NO.	LOCATION	DESCRIPTION
19+460.5 - 19+538.4	6	RT	JAPANESE TREE LILAC
19+501.6 - 19+575.0	7	LT	JAPANESE TREE LILAC
19+574.1	1	RT	RED OAK

VAOT Metric

N

VT STATE PLANE GRID

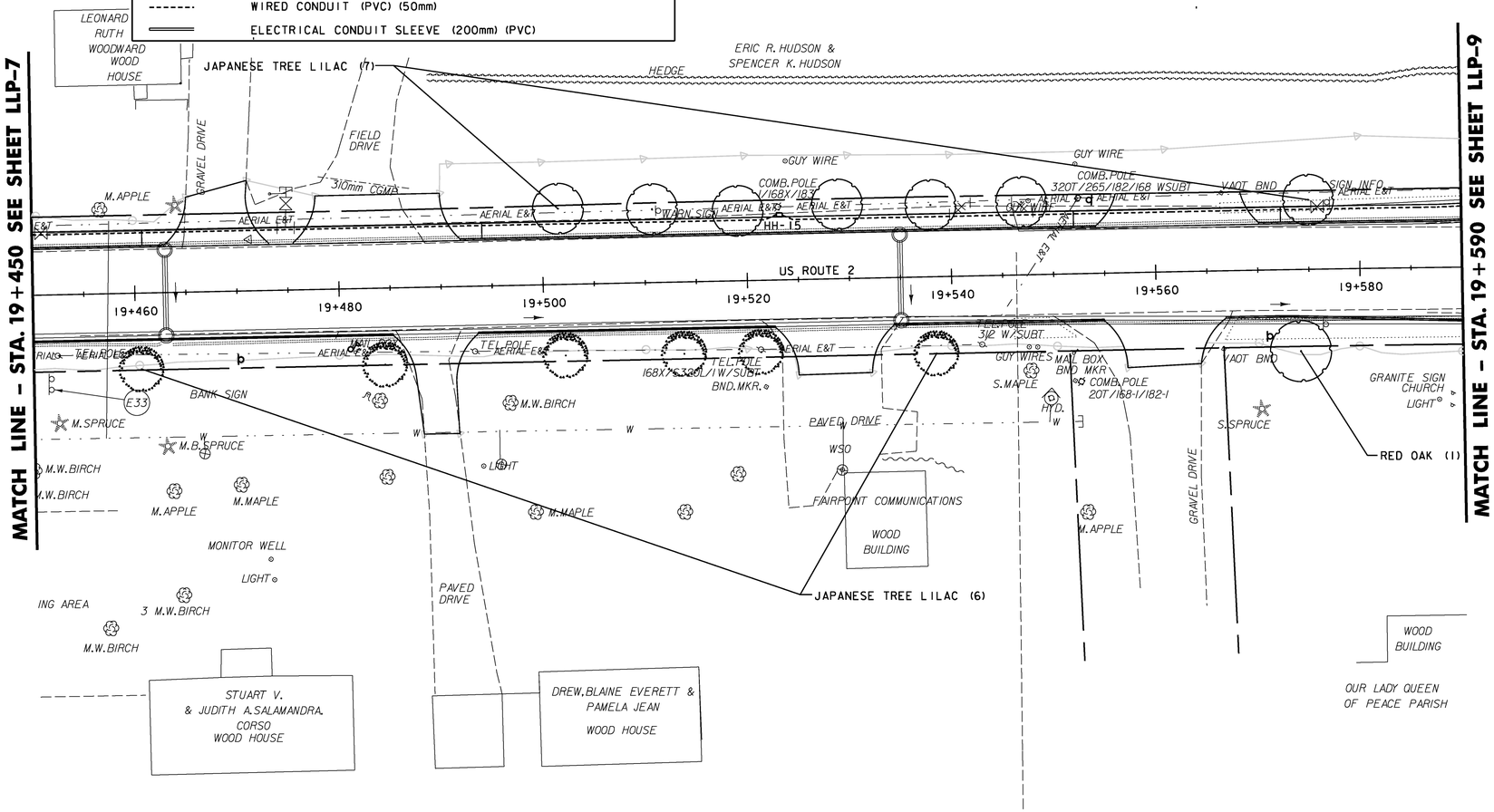

REPLACEMENT SHEETS ISSUED 02/24/2012

STA 19+450 TO 19+590

DATUM

VERTICAL	NAVD88
HORIZONTAL	NAD83(92)

NOTES:
1. ALL TREES ARE TO BE STAKED AND PLANTED SO TRUNK IS A MINIMUM OF 1M FROM EDGE OF ALL SIDEWALKS AND FROM SUBASE FOR FUTURE SIDEWALK (EAST OF STA 2+220 ON RTE 2) - SEE CROSS SECTIONS.
2. FINAL PLANTING LOCATION ARE TO BE APPROVED BY VTRANS PRIOR TO PLACEMENT OF LANDSCAPE BACKFILL AND INSTALLATION OF ALL TREES AND SHRUBS.

0 10 20
SCALE 1:250

Stantec

PROJECT NAME:	DANVILLE
PROJECT NUMBER:	F EGC 028-3(32)
FILE NAME: ...\PlotFiles\084 1108.ptf	PLOT DATE: 2/24/2012
DESIGN SUPERVISOR: GARY SANTY	DRAWN BY: STANTEC
DESIGNED BY: STANTEC	CHECKED BY: STANTEC
LANDSCAPE & LIGHTING PLAN LLP-8	SHEET 184 OF 306

2/24/2012 1:06:58 PM V:\1953\active\195300033.0092\Revised Plans\PlotFiles\084 1108.ptf

900.640 – SPECIAL PROVISION (GRANITE POST AND WOOD DIAMOND RAIL FENCE)

STA.	LOCATION
19+620.3-19+640.2	LT
19+619.5-19+639.5	RT

679.45 – LIGHT POLE

POLE NO.	LOCATION	FIXTURE TYPE	WATTS	TYPE	MOUNTING HEIGHT	BREAKAWAY
SL-89	19+617.0, 7.84M LT	B	175	III	5.48M	
SL-91	19+646.0, 8.59M LT	B	175	III	5.48M	
SL-90	19+617.0, 7.17M RT	B	175	III	5.48M	X
SL-92	19+645.0, 8.07M RT	B	175	III	5.48M	X

678.26 – JUNCTION BOX

HAND HOLE NO.	LOCATION
HH-17	19+621.00, 7.75M LT
HH-36	19+621.00, 7.28M RT

656.30 – DECIDUOUS TREES

STA.	NO.	LOCATION	DESCRIPTION
19+618.9 - 19+636.8	4	RT	ADIRONDOCK CRABAPPLE
19+618.9 - 19+636.8	4	LT	ADIRONDOCK CRABAPPLE

900.620 – SPECIAL PROVISION (GRANITE POST)

STA.	LOCATION	DESCRIPTION
19+639.5	RT	GRANITE POST #26
19+640.2	LT	GRANITE POST #25

678.30 – ELECTRICAL CONDUIT SLEEVE (200mm)(PVC)

STA.
19+621.1, RT - 19+621.2, LT

VAOT Metric

N
VT STATE PLANE GRID

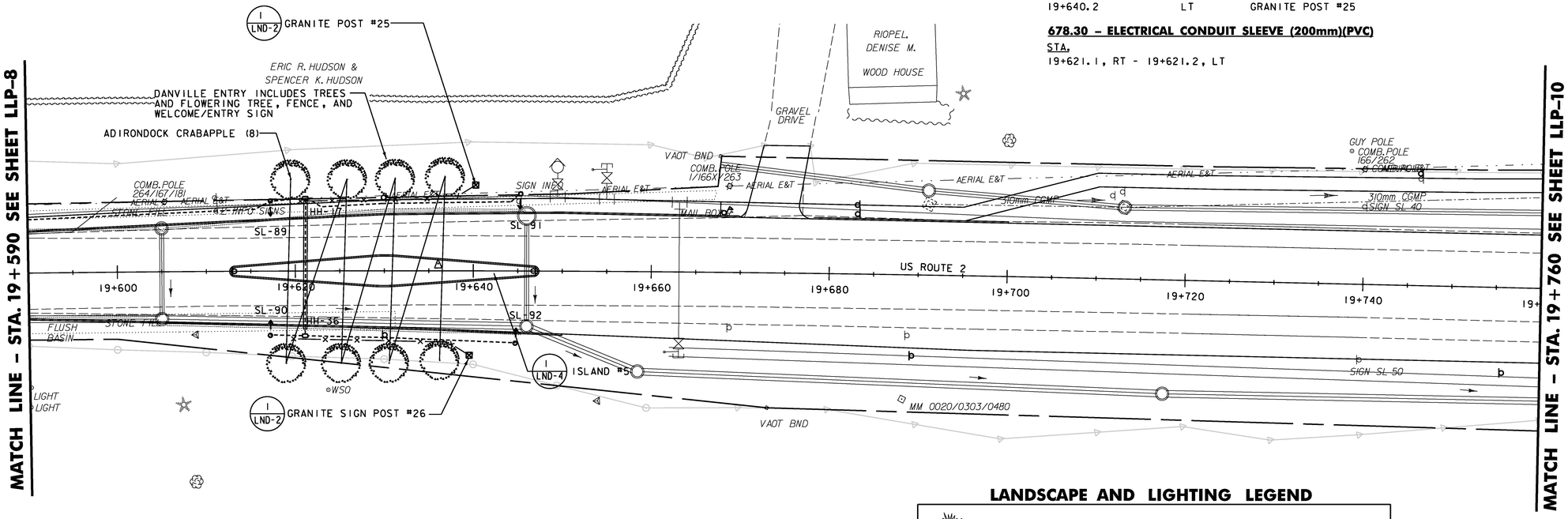

LANDSCAPE AND LIGHTING LEGEND

- PROPOSED CONIFEROUS — SHOWN AT APPROXIMATE 20-YEAR GROWTH SPREAD
- PROPOSED DECIDUOUS — SHOWN AT APPROXIMATE 20-YEAR GROWTH SPREAD
- EXISTING TREES
- LIGHTING LOCATIONS (ARROW SHOWS DISTRIBUTION DIRECTION)
- GRANITE POST LOCATIONS
- HANDHOLE
- LP — ROUTE 2 LIGHTING METER PEDESTAL SEE DETAIL ON LIGHTING DETAILS SHEET LTD-6
- GRN — DANVILLE GREEN METER PEDESTAL SEE DETAIL ON LIGHTING DETAILS SHEET LTD-6
- 3 / LND-3 — LANDSCAPING DETAIL SHEET
- LANDSCAPE BACKFILL
- WIRED CONDUIT (PVC) (50mm)
- ELECTRICAL CONDUIT SLEEVE (200mm) (PVC)

REPLACEMENT SHEETS ISSUED 02/24/2012

STA 19+590 TO 19+760

NOTES:
1. ALL TREES ARE TO BE STAKED AND PLANTED SO TRUNK IS A MINIMUM OF 1M FROM EDGE OF ALL SIDEWALKS AND FROM SUBASE FOR FUTURE SIDEWALK (EAST OF STA 2+220 ON RTE 2) - SEE CROSS SECTIONS.
2. FINAL PLANTING LOCATION ARE TO BE APPROVED BY VTRANS PRIOR TO PLACEMENT OF LANDSCAPE BACKFILL AND INSTALLATION OF ALL TREES AND SHRUBS.

DATUM

VERTICAL	NAVD88
HORIZONTAL	NAD83(92)

0 10 20
SCALE 1:250

Stantec

PROJECT NAME:	DANVILLE
PROJECT NUMBER:	F EGC 028-3(32)
FILE NAME: ...\PlotFiles\085 1109.ptf	PLOT DATE: 2/24/2012
DESIGN SUPERVISOR: GARY SANTY	DRAWN BY: STANTEC
DESIGNED BY: STANTEC	CHECKED BY: STANTEC
LANDSCAPE & LIGHTING PLAN LLP-9	SHEET 185 OF 306

2/24/2012 2:11:51 PM W:\1953\active\195300033.0092\Revised Plans\PlotFiles\085 1109.ptf

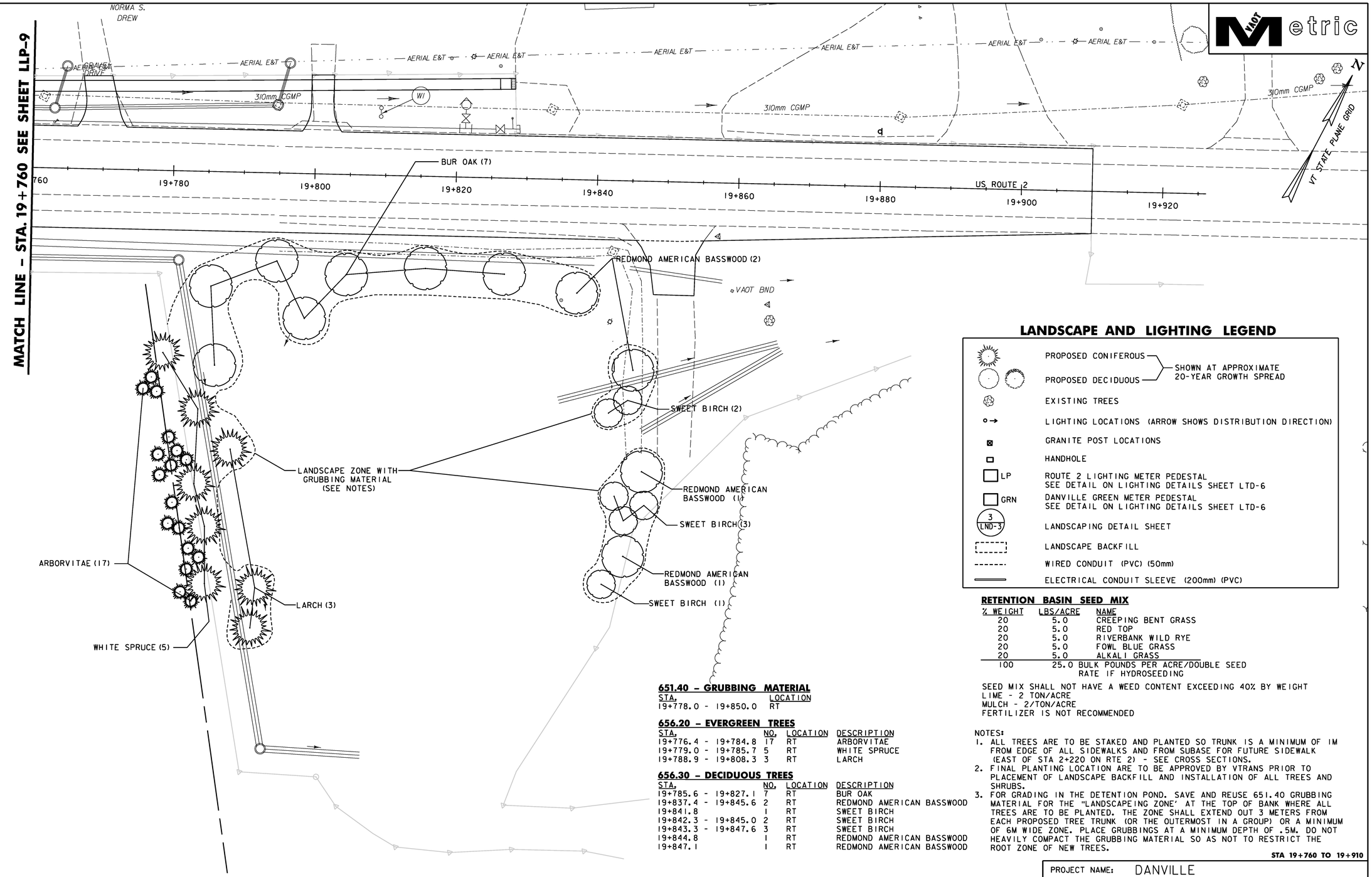

LANDSCAPE AND LIGHTING LEGEND

- PROPOSED CONIFEROUS — SHOWN AT APPROXIMATE 20-YEAR GROWTH SPREAD
- PROPOSED DECIDUOUS — SHOWN AT APPROXIMATE 20-YEAR GROWTH SPREAD
- EXISTING TREES
- LIGHTING LOCATIONS (ARROW SHOWS DISTRIBUTION DIRECTION)
- GRANITE POST LOCATIONS
- HANDHOLE
- LP — ROUTE 2 LIGHTING METER PEDESTAL SEE DETAIL ON LIGHTING DETAILS SHEET LTD-6
- GRN — DANVILLE GREEN METER PEDESTAL SEE DETAIL ON LIGHTING DETAILS SHEET LTD-6
- 3 / LND-3 — LANDSCAPING DETAIL SHEET
- LANDSCAPE BACKFILL
- WIRED CONDUIT (PVC) (50mm)
- ELECTRICAL CONDUIT SLEEVE (200mm) (PVC)

RETENTION BASIN SEED MIX

% WEIGHT	LBS/ACRE	NAME
20	5.0	CREEPING BENT GRASS
20	5.0	RED TOP
20	5.0	RIVERBANK WILD RYE
20	5.0	FOWL BLUE GRASS
20	5.0	ALKALI GRASS
100	25.0	BULK POUNDS PER ACRE/DOUBLE SEED RATE IF HYDROSEEDING

SEED MIX SHALL NOT HAVE A WEED CONTENT EXCEEDING 40% BY WEIGHT
LIME - 2 TON/ACRE
MULCH - 2/TON/ACRE
FERTILIZER IS NOT RECOMMENDED

651.40 - GRUBBING MATERIAL

STA.	LOCATION
19+778.0 - 19+850.0	RT

656.20 - EVERGREEN TREES

STA.	NO.	LOCATION	DESCRIPTION
19+776.4 - 19+784.8	17	RT	ARBORVITAE
19+779.0 - 19+785.7	5	RT	WHITE SPRUCE
19+788.9 - 19+808.3	3	RT	LARCH

656.30 - DECIDUOUS TREES

STA.	NO.	LOCATION	DESCRIPTION
19+785.6 - 19+827.1	7	RT	BUR OAK
19+837.4 - 19+845.6	2	RT	REDMOND AMERICAN BASSWOOD
19+841.8	1	RT	SWEET BIRCH
19+842.3 - 19+845.0	2	RT	SWEET BIRCH
19+843.3 - 19+847.6	3	RT	SWEET BIRCH
19+844.8	1	RT	REDMOND AMERICAN BASSWOOD
19+847.1	1	RT	REDMOND AMERICAN BASSWOOD

NOTES:
1. ALL TREES ARE TO BE STAKED AND PLANTED SO TRUNK IS A MINIMUM OF 1M FROM EDGE OF ALL SIDEWALKS AND FROM SUBASE FOR FUTURE SIDEWALK (EAST OF STA 2+220 ON RTE 2) - SEE CROSS SECTIONS.
2. FINAL PLANTING LOCATION ARE TO BE APPROVED BY VTRANS PRIOR TO PLACEMENT OF LANDSCAPE BACKFILL AND INSTALLATION OF ALL TREES AND SHRUBS.
3. FOR GRADING IN THE DETENTION POND. SAVE AND REUSE 651.40 GRUBBING MATERIAL FOR THE "LANDSCAPEING ZONE' AT THE TOP OF BANK WHERE ALL TREES ARE TO BE PLANTED. THE ZONE SHALL EXTEND OUT 3 METERS FROM EACH PROPOSED TREE TRUNK (OR THE OUTERMOST IN A GROUP) OR A MINIMUM OF 6M WIDE ZONE. PLACE GRUBBINGS AT A MINIMUM DEPTH OF .5M. DO NOT HEAVILY COMPACT THE GRUBBING MATERIAL SO AS NOT TO RESTRICT THE ROOT ZONE OF NEW TREES.

STA 19+760 TO 19+910

DATUM
VERTICAL NAVD88
HORIZONTAL NAD83(92)

REPLACEMENT SHEETS ISSUED 02/24/2012

0 10 20
SCALE 1:250

Stantec

PROJECT NAME: DANVILLE
PROJECT NUMBER: F EGC 028-3(32)

FILE NAME: ...\PlotFiles\086 1110.ptf
DESIGN SUPERVISOR: GARY SANTY
DESIGNED BY: STANTEC
LANDSCAPE & LIGHTING PLAN LLP-10
PLOT DATE: 2/24/2012
DRAWN BY: STANTEC
CHECKED BY: STANTEC
SHEET 186 OF 306

2/24/2012 1:17:00 PM V:\1953\active\195300033.0082\Revised Plans\PlotFiles\086 1110.ptf

900.620 – SPECIAL PROVISION (GRANITE POST)

STA.	LOCATION	DESCRIPTION
8+071.0	RT	GRANITE POST #4
8+117.1	RT	GRANITE POST #2

900.620 – SPECIAL PROVISION (FROST-FREE MANHOLE) – SEE NOTE 3

STA.	LOCATION
8+071.0	LT

Metric

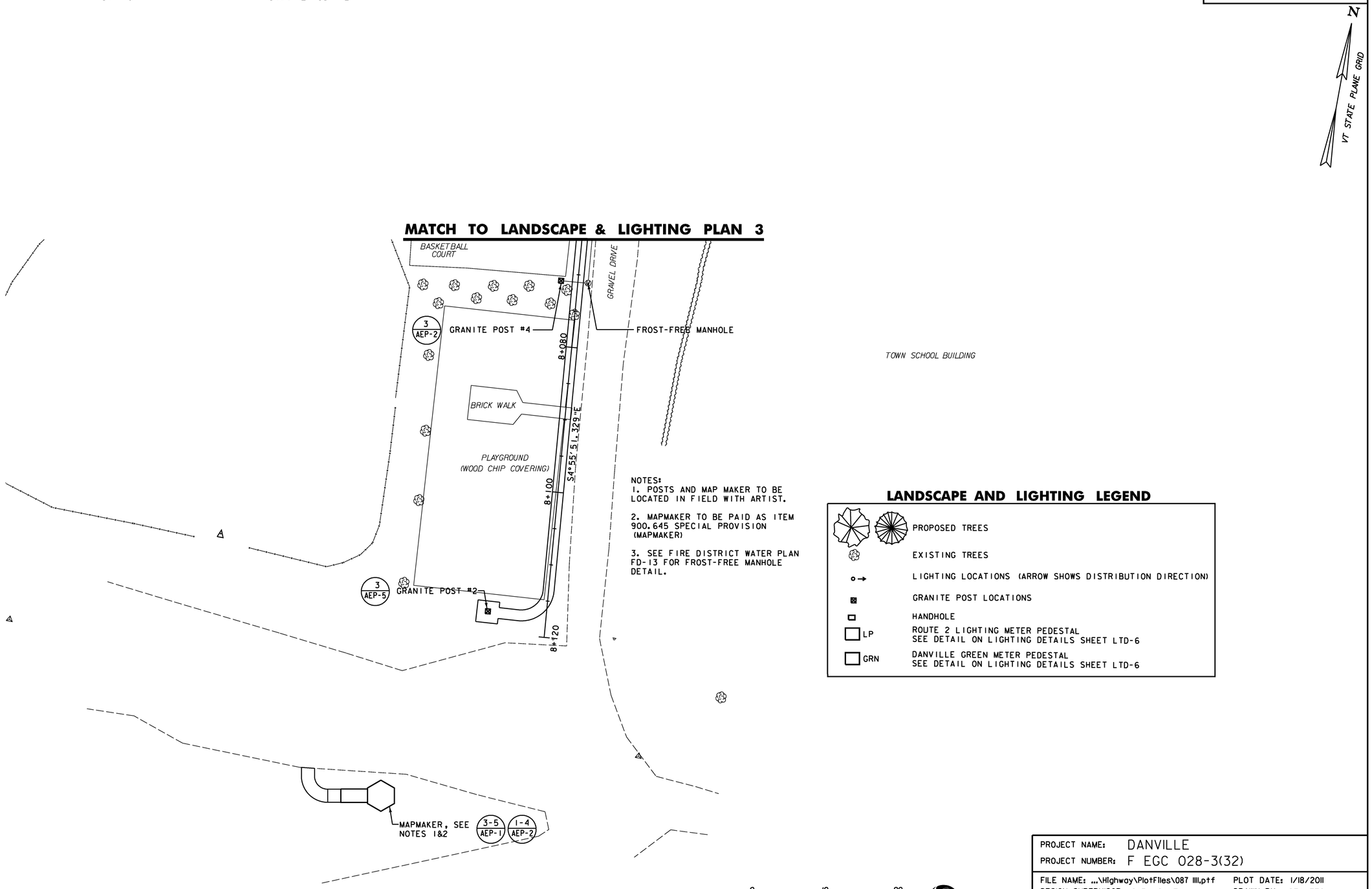

NOTES:
1. POSTS AND MAP MAKER TO BE LOCATED IN FIELD WITH ARTIST.
2. MAPMAKER TO BE PAID AS ITEM 900.645 SPECIAL PROVISION (MAPMAKER)
3. SEE FIRE DISTRICT WATER PLAN FD-13 FOR FROST-FREE MANHOLE DETAIL.

LANDSCAPE AND LIGHTING LEGEND

- PROPOSED TREES
- EXISTING TREES
- LIGHTING LOCATIONS (ARROW SHOWS DISTRIBUTION DIRECTION)
- GRANITE POST LOCATIONS
- HANDHOLE
- LP — ROUTE 2 LIGHTING METER PEDESTAL SEE DETAIL ON LIGHTING DETAILS SHEET LTD-6
- GRN — DANVILLE GREEN METER PEDESTAL SEE DETAIL ON LIGHTING DETAILS SHEET LTD-6

0 10 20
SCALE 1:250

Stantec

PROJECT NAME: DANVILLE	
PROJECT NUMBER: F EGC 028-3(32)	
FILE NAME: ...\Highway\PlotFiles\087 IIII.ptf	PLOT DATE: 1/18/2011
DESIGN SUPERVISOR: GARY SANTY	DRAWN BY: STANTEC
DESIGNED BY: STANTEC	CHECKED BY: STANTEC
LANDSCAPE & LIGHTING PLAN LLP-11	SHEET 187 OF 306

1/18/2011 1:54:18 PM v:\1953\active\195310033_10192\Highway\PlotFiles\087 IIII.ptf

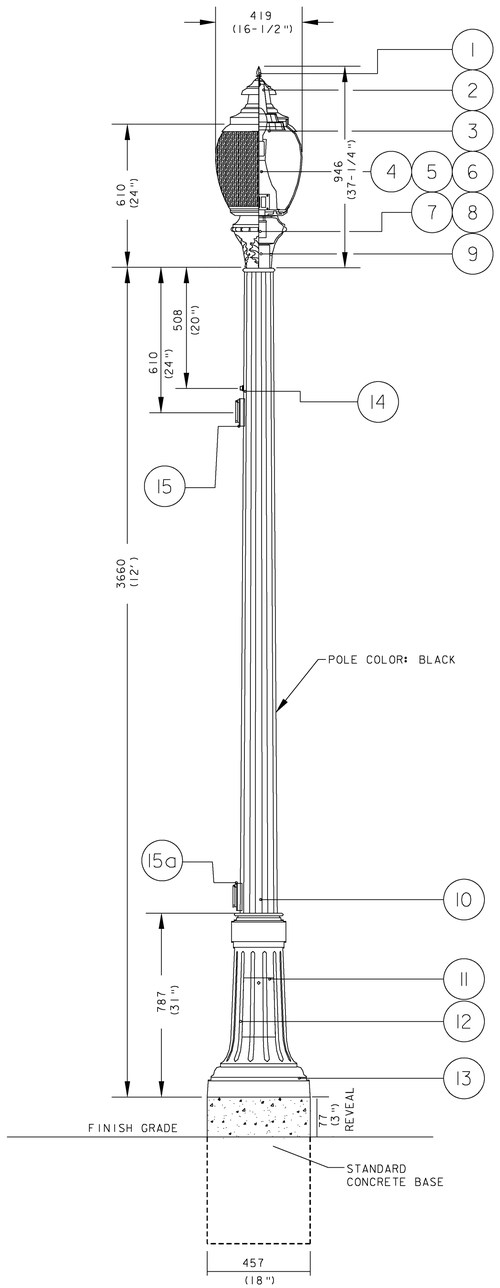

STREET LIGHT 'A' DETAIL

N.T.S.

LUMINAIRE:
LENS FINISH: FROSTED CLEAR POLYCARBONATE

HOUSING: ALUMINUM

LAMP:
TYPE: 100W METAL HALIDE
LUMENS: 7500 MEAN LMS
CAT. NO.: ED 17 MED
100/VBD

ANSI/IES TYPE:
TYPE III CUT-OFF
OPTICS

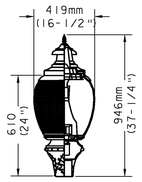

MOUNTING HEIGHT TO LUMINOUS CENTER: 4.2M (14.0')

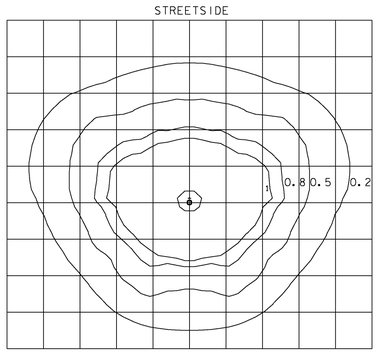

GRID SIZE: 3 METER SQUARES

FIXTURE TYPE 'A'
ISO-FOOTCANDLE DATA
NO SCALE

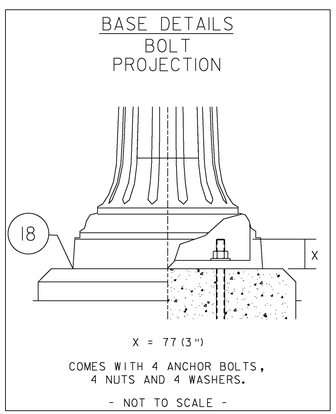

° ANCHORING BOLTS
STAINLESS STEEL, 19 x 686
(supplied by LUMEC inc). (3/4 "x 27")

LUMINAIRE: 100MH-S55-PCFC-DSX3-120-SFO-BKTX-1-FN1

1. FINIAL: DECORATIVE CAST 356 ALUMINUM, MECHANICALLY ASSEMBLED.

2. CUPOLA: DECORATIVE SPUN ALUMINUM 1100-0, MECHANICALLY MOUNTED ON HOOD.

3. HOOD: SPUN ALUMINUM 1100-0 DOME, MECHANICALLY ASSEMBLED ON THE LUMINAIRE.

4. GLOBE: MADE OF ONE-PIECE ROTO-MOLDED FROSTED CLEAR POLYCARBONATE. THE GLOBE IS MECHANICALLY ASSEMBLED ON THE ACCESS-MECHANISM.

5. LAMP: 100 WATTS METAL HALIDE, ED 17 BULB, MED BASE.

6. OPTICAL SYSTEM: (SE3), I.E.S. TYPE III (ASYMMETRICAL). CUT-OFF OPTICAL SYSTEM. MULTI-FACETED HYDROFORMED ALUMINUM REFLECTOR BRIGHTENED AND ANODIZED, MECHANICALLY ASSEMBLED ON THE LUMINAIRE.

7. BALLAST: HIGH POWER FACTOR OF 90%. PRIMARY VOLTAGE 120 VOLTS. LAMP STARTING CAPACITY -20F (-30C) DEGREES. ASSEMBLED ON A UNITIZED REMOVABLE TRAY WITH QUICK DISCONNECT PLUG.

8. ACCESS-MECHANISM: ROTOMATIC, DIE-CAST A380 ALUMINUM QUARTER-TURN MECHANISM WITH CONSTANT-PRESSURE SPRING-LOADED POINTS. THE MECHANISM SHALL OFFER TOOL FREE ACCESS TO THE INSIDE OF THE LUMINAIRE, LAMP AND BALLAST TRAY. AN EMBEDDED MEMORY-RETENTIVE GASKET SHALL ENSURE WEATHERPROOFING. A RED KEY ON THE BALLAST TRAY SHALL INDICATE POINT OF ENGAGEMENT.

9. FITTER: CAST 356 ALUMINUM C/W 4 SET SCREWS 1/4-20 UNC. SLIP-FITS ON A 4"(102) OUTSIDE DIAMETER X 4" (102) LONG TENON.

POLE RTA906V-12-PH7/120-GFI-BXTX-BA

10. POLE SHAFT: SHALL BE MADE FROM A 5" (127) 12 FLUTED MANDRELL-FORMED, TAPERED ALUMINUM SHAFT 6" (150) ROUND, HAVING A 0.250" (6.4) WALL THICKNESS, WELDED TO THE POLE BASE.

11. JOINT COVER: ONE-PIECE ROUND JOINT COVER MADE FROM CAST 356 ALUMINUM, MECHANICALLY FASTENED WITH STAINLESS STEEL SCREWS.

12. MAINTENANCE OPENING: THE POLE SHALL HAVE A 4" WIDE X 9" LONG (102 X 229) MAINTENANCE OPENING CENTERED 15 5/8" (397) FROM THE BOTTOM OF THE ANCHOR PLATE, COMPLETE WITH A WEATHERPROOF CAST 356 ALUMINUM COVER AND A FACTORY ASSEMBLY COPPER GROUND LUG.

13. POLE BASE: SHALL BE MADE FROM A ROUND FLUTED CAST ALUMINUM BASE.

14. POLE OPTIONS: PH7 BUTTON TYPE PHOTOCELL, 120 VOLTS.

15. POLE OPTIONS: DUPLEX GFCI RECEPTACLE, 15 A, 120 VOLTS, COMPLETE WITH A WEATHERPROOF COVER.

15A. VENDOR RECEPTACLES MOUNTED LOW ON POLES SHALL BE PROVIDED FOR FIXTURES IN THE GREEN WITH IN-USE WEATHER PROOF LOCKABLE METAL COVERS, SEE LIGHTING DETAIL SHEET LTD-5 FOR POLE LOCATIONS.

MISCELLANEOUS

16. WIRING: TYPE TEW 14 GA. 6" (152) MINIMUM EXCEEDING FROM LUMINAIRE

17. HARDWARE: ALL EXPOSED SCREWS WILL BE IN STAINLESS STEEL. NEOPRENE AND/OR SILICONE GASKETING IS APPLIED.

18. COATING: APPLY ON EPOXY BASE COAT FOR CORROSION RESISTANCE, AND A URETHANE TOP COAT FOR ULTRAVIOLET PROTECTION ON THE ALUMINUM POLE BASE.

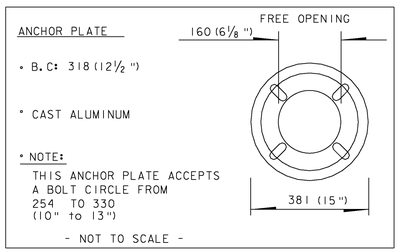

REPLACEMENT SHEETS ISSUED 02/24/2012

PROJECT NAME:	DANVILLE
PROJECT NUMBER:	F EGC 028-3(32)
FILE NAME: ...\Plotfiles\lighting-det01.ptf	PLOT DATE: 2/24/2012
DESIGN SUPERVISOR: GARY SANTY	DRAWN BY: STANTEC
DESIGNED BY: STANTEC	CHECKED BY: STANTEC
LIGHTING DETAILS SHEET LTD-1	SHEET 188 OF 306

Stantec

2/24/2012 2:06:06 PM V:\1953\active\195300033_0192\Highways\Plotfiles\lighting-det01.ptf

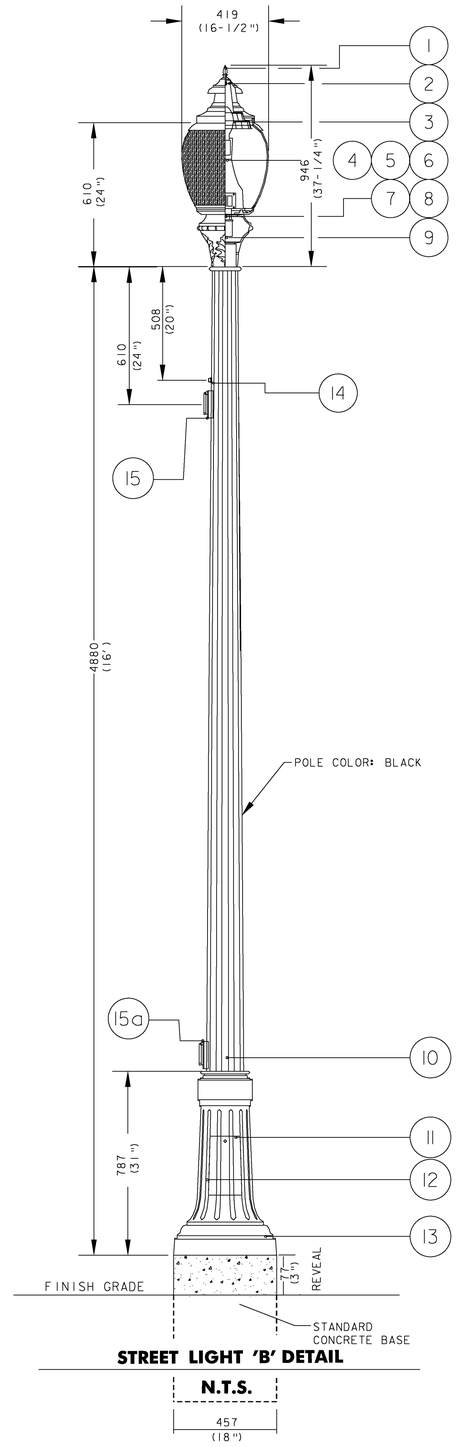

STREET LIGHT 'B' DETAIL

N.T.S.

LUMINAIRE:
LENS FINISH: FROSTED CLEAR POLYCARBONATE

HOUSING: ALUMINUM

LAMP:
TYPE: 150W METAL HALIDE
LUMENS: 10,500 MEAN LMS
CAT. NO.: ED 17 MED
175/VBD

ANSI/IES TYPE:
TYPE III CUT-OFF
OPTICS
WITH HOUSE SHIELD

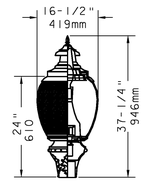

MOUNTING HEIGHT TO LUMINOUS CENTER: 5.5M (18.0')

GRID SIZE: 3 METER SQUARES

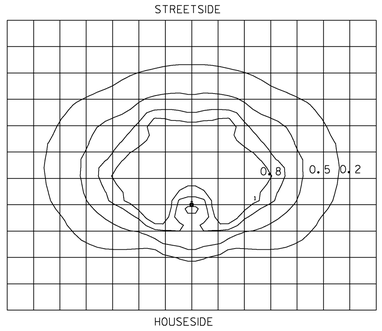

GRID SIZE: 3 METER SQUARES

FIXTURE TYPE 'B'
ISO-FOOTCANDLE DATA
NO SCALE

BASE DETAILS
BOLT
PROJECTION

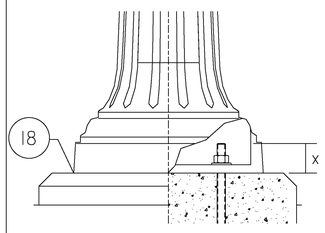

X = 77 (3")

COMES WITH 4 ANCHOR BOLTS, 4 NUTS AND 4 WASHERS.

- NOT TO SCALE -

° ANCHORING BOLTS
STAINLESS STEEL, 19 x 686 (3/4 "x 27")
(supplied by LUMEC inc).

ANCHOR PLATE

° B.C: 318 (12½")

° CAST ALUMINUM

° NOTE:
THIS ANCHOR PLATE ACCEPTS A BOLT CIRCLE FROM 254 TO 330 (10" to 13")

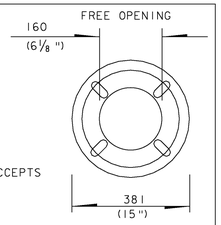

- NOT TO SCALE -

REPLACEMENT SHEETS ISSUED 02/24/2012

TYPE B LUMINAIRE: 150MH-S55-DSX3120-HS-FN1-BKTK

1. FINIAL: DECORATIVE CAST 356 ALUMINUM, MECHANICALLY ASSEMBLED.

2. CUPOLA: DECORATIVE SPUN ALUMINUM 1100-O, MECHANICALLY MOUNTED ON HOOD.

3. HOOD: SPUN ALUMINUM 1100-O DOME, MECHANICALLY ASSEMBLED ON THE LUMINAIRE.

4. GLOBE: MADE OF ONE-PIECE ROTO-MOLDED FROSTED CLEAR POLYCARBONATE. THE GLOBE IS MECHANICALLY ASSEMBLED ON THE ACCESS-MECHANISM.

5. LAMP: 150 WATTS METAL HALIDE, ED 17 BULB, MEDIUM BASE.

6. OPTICAL SYSTEM: (SE3), I.E.S. TYPE III (ASYMMETRICAL) WITH HOUSE SHIELD. CUT-OFF OPTICAL SYSTEM. MULTI-FACETED HYDROFORMED ALUMINUM REFLECTOR BRIGHTENED AND ANODIZED, MECHANICALLY ASSEMBLED ON THE LUMINAIRE.

7. BALLAST: HIGH POWER FACTOR OF 90%. PRIMARY VOLTAGE 120 VOLTS. LAMP STARTING CAPACITY -20F(-30C) DEGREES. ASSEMBLED ON A UNITIZED REMOVABLE TRAY WITH QUICK DISCONNECT PLUG.

8. ACCESS-MECHANISM: ROTOMATIC, DIE-CAST A380 ALUMINUM QUARTER-TURN MECHANISM WITH CONSTANT-PRESSURE SPRING-LOADED POINTS. THE MECHANISM SHALL OFFER TOOL FREE ACCESS TO THE INSIDE OF THE LUMINAIRE, LAMP AND BALLAST TRAY. AN EMBEDDED MEMORY-RETENTIVE GASKET SHALL ENSURE WEATHERPROOFING. A RED KEY ON THE BALLAST TRAY SHALL INDICATE POINT OF ENGAGEMENT.

9. FITTER: CAST 356 ALUMINUM C/W 4 SET SCREWS 1/4-20 UNC. SLIP-FITS ON A 102 (4") OUTSIDE DIAMETER X 102 (4") LONG TENON.

POLE RTA906V-16-PH7/120-GFI-BXTX-BA

10. POLE SHAFT: SHALL BE MADE FROM A 127 (5") 16 FLUTED MANDRELL-FORMED, TAPERED ALUMINUM SHAFT 150 (6") ROUND, HAVING A 6.4 (0.250") WALL THICKNESS, WELDED TO THE POLE BASE.

11. JOINT COVER: ONE-PIECE ROUND JOINT COVER MADE FROM CAST 356 ALUMINUM, MECHANICALLY FASTENED WITH STAINLESS STEEL SCREWS.

12. MAINTENANCE OPENING: THE POLE SHALL HAVE A 102 WIDE X 229 LONG (4" X 9") MAINTENANCE OPENING CENTERED 397 (15 5/8") FROM THE BOTTOM OF THE ANCHOR PLATE, COMPLETE WITH A WEATHERPROOF CAST 356 ALUMINUM COVER AND A FACTORY ASSEMBLY COPPER GROUND LUG.

13. POLE BASE: SHALL BE MADE FROM A ROUND FLUTED CAST ALUMINUM BASE COMPLETE WITH A CAST-IN ANCHOR PLATE.

14. POLE OPTIONS: PH7 BUTTON TYPE PHOTOCELL, 120 VOLTS.

15. POLE OPTIONS: DUPLEX GFCI RECEPTACLE, 15 A, 120 VOLTS, COMPLETE WITH A WEATHERPROOF COVER (ON FIXTURES SL-48, 50, 56 & 58 ONLY).

15A. VENDOR RECEPTACLES MOUNTED LOW ON POLES SHALL BE PROVIDED FOR FIXTURES IN THE GREEN WITH IN-USE WEATHER PROOF LOCKABLE METAL COVERS, SEE LIGHTING DETAIL SHEET LTD-5 FOR POLE LOCATIONS (ON FIXTURES SL-48, 50, 56 & 58 ONLY). RECEPTACLES SHALL BE CIRCUITED FROM SEPARATE PANEL GRN VENDOR RECEPTACLES.

MISCELLANEOUS

16. WIRING: TYPE TEW 14 GA. 152 (6") MINIMUM EXCEEDING FROM LUMINAIRE. VENDOR RECEPTACLES MOUNTED LOW ON POLES SHALL BE PROVIDED FOR FIXTURES IN THE GREEN, SEE LIGHTING DETAIL SHEETS LTD-5 FOR LOCATIONS.

17. HARDWARE: ALL EXPOSED SCREWS WILL BE IN STAINLESS STEEL. NEOPRENE AND/OR SILICONE GASKETING IS APPLIED.

18. COATING: APPLY ON EPOXY BASE COAT FOR CORROSION RESISTANCE, AND A URETHANE TOP COAT FOR ULTRAVIOLET PROTECTION ON THE ALUMINUM POLE BASE.

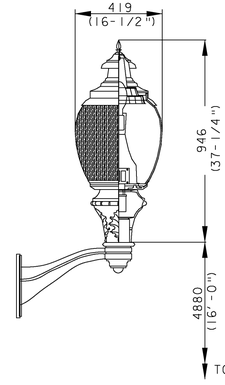

TYPE 'M' FIXTURE, TYPE 'B' LUMININARE MOUNTED ON A LUMEC TYPE 'CRF' BRACKET ARM MOUNTED TO MAST ARM POLE.

STREET LIGHT 'M' DETAIL

N.T.S.

PROJECT NAME: DANVILLE	
PROJECT NUMBER: F EGC 028-3(32)	
FILE NAME: ...\Plotfiles\lighting-det05.ptf	PLOT DATE: 2/24/2012
DESIGN SUPERVISOR: GARY SANTY	DRAWN BY: STANTEC
DESIGNED BY: STANTEC	CHECKED BY: STANTEC
LIGHTING DETAILS SHEET LTD-2	SHEET 189 OF 306

Stantec

2/24/2012 2:40:07 PM V:\1953\active\195300033.0092\Highways\Plotfiles\lighting-det05.ptf

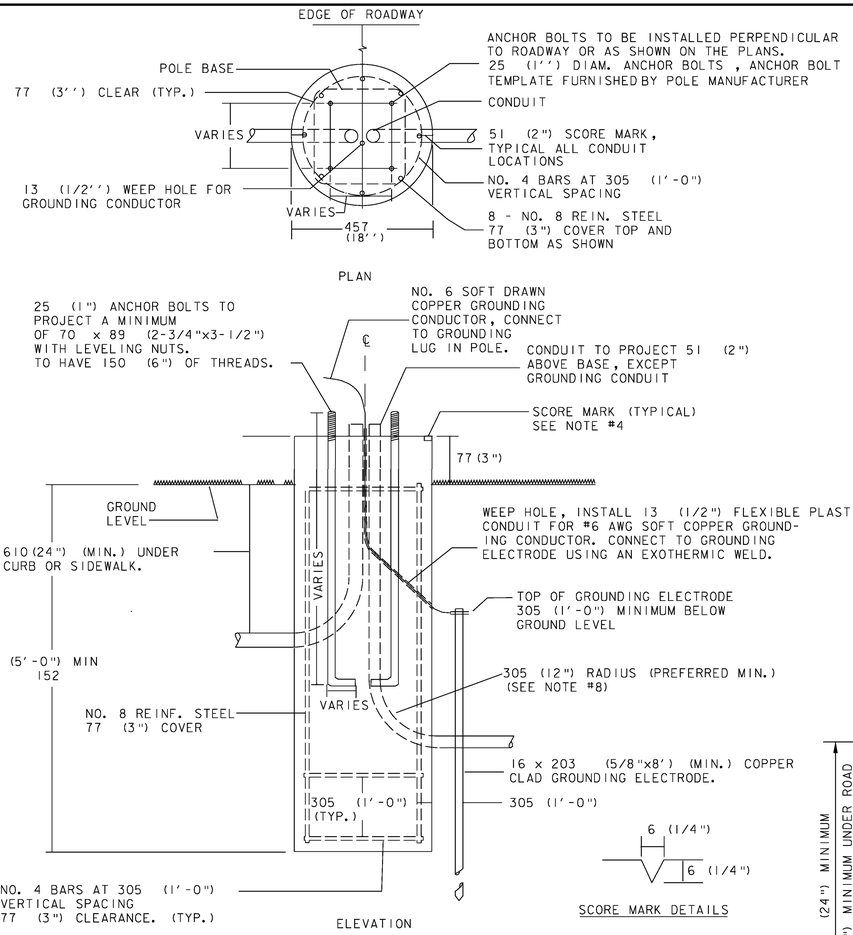

CONCRETE POLE BASE DETAIL

NOT TO SCALE

CONCRETE BASE AND GENERAL NOTES:

1. ALL CONCRETE BASES TO BE CONCRETE CLASS B, AND SHALL HAVE A SMOOTH LEVEL TOP SURFACE FINISHED WITH A 13 (1/2") RADIUS EDGING TOOL.
2. ALL REINFORCING STEEL TO CONFORM TO THE REQUIREMENTS FOR "REINFORCING STEEL".
3. TEMPLATE FOR ANCHOR BOLTS, STAINLESS STEEL ANCHOR BOLTS, NUTS AND WASHERS TO BE OBTAINED BY CONTRACTOR PRIOR TO CONSTRUCTION OF BASES.
4. SCORE TOP OF CONCRETE BASE TO SHOW LOCATION OF CONDUIT(S).
5. CONDUIT SIZE - AS SHOWN ON THE PLANS.
6. ALL EXPOSED METAL HARDWARE SHALL BE GALVANIZED OR STAINLESS STEEL.
7. IF THE ELECTRICAL CONDUIT IN THE CONCRETE BASE IS GALVANIZED STEEL, GROUNDING BUSHINGS SHALL BE USED.
8. THE MINIMUM RADIUS FOR RIGID METALLIC OR NONMETALLIC ELECTRICAL CONDUIT SHALL BE SIX TIMES THE INSIDE DIAMETER OF THE CONDUIT.
9. SEE VTRANS STANDARD DETAILS E-180A AND E-180B FOR THE INSTALLATION OF STREET LIGHTING W/ CONCRETE BASES.
10. WHEN CONCRETE BASES ARE INSTALLED IN SLOPING GROUND, THE GREATEST EXPOSED HEIGHT TO KEEP ALL OF THE TOP ABOVE GROUND MUST BE DOUBLED AND THEN ADDED TO THE MINIMUM DEPTH FOR THE TOTAL BASE DEPTH.
11. CARE SHOULD BE TAKEN WHERE CONCRETE BASES, DRAINAGE STRUCTURES OR UTILITIES ARE CLOSE TOGETHER.

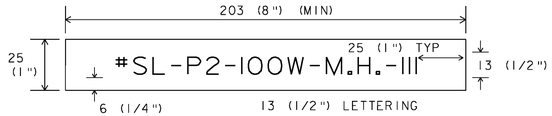

LEGEND: BLACK OR WHITE (NON-REFL.) - STAMPED PRIOR TO PRINTING/PAINTING.
BACKGROUND: NATURAL ALUMINUM OR FLAT BLACK SURFACE, SAME AS POLE FINISH.

DETAILS FOR TAGS ATTACHED TO STREET LIGHT POLES

NOTES

1. THE TAG SHALL BE MOUNTED ON ALL LIGHT POLES IN SUCH A MANNER AS NOT TO BE EASILY REMOVED, SUCH AS WELDED, RIVETED, OR BOLTED WITH VANDAL PROOF BOLTS.
2. THE LETTERS SHALL BE PUNCHED, STAMPED, ENGRAVED, OR PHOTO-ETCHED. PUNCHING, STAMPING OR ENGRAVING SHALL PENETRATE AT LEAST ½ THE BASE MATERIAL THICKNESS.
3. THE BASE MATERIAL FOR THE TAG SHALL BE ALUMINUM WITH A MINIMUM THICKNESS OF 2mm (0.10").
4. THE TAG SHALL BE ATTACHED TO THE POLE ABOVE THE HANDHOLE, 152 (6") MAXIMUM. IF THE POLE HAS A TRANSFORMER BASE ATTACH TAG TO COVER.
5. TYPE 'A' FIXTURE TAG SHALL READ: A-#-100W-M.H.-111.
   TYPE 'B' FIXTURE TAG SHALL READ: B-#-175W-M.H.-111 HS.

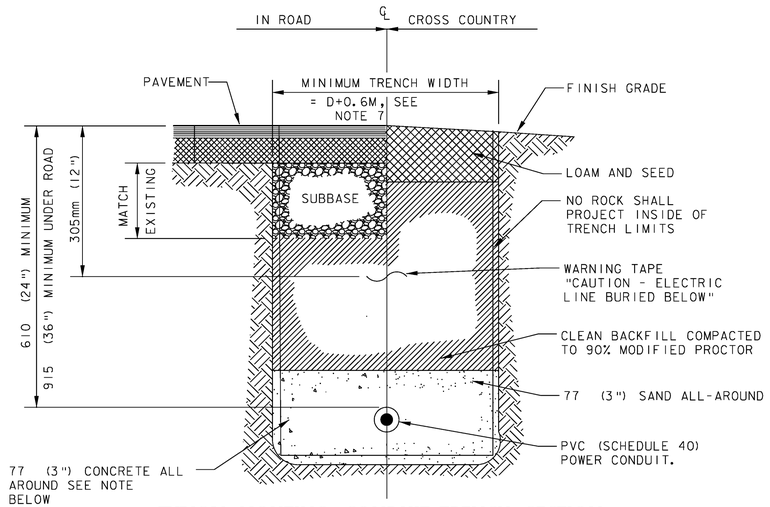

TYPICAL LIGHTING CONDUIT TRENCH SECTION

NOT TO SCALE

NOTES

1. BOTTOM OF TRENCH SHALL BE UNDISTURBED ORIGINAL GROUND OR FIRMLY COMPACTED EARTH FREE FROM VOIDS, ROCK OR RUBBLE AND OF RELATIVELY SMOOTH ARCH, AND LINED WITH A MINIMUM OF 51 (2") OF CLEAN SAND.
2. PVC CONDUIT(S) UNDER AREAS SUBJECT TO VEHICULAR TRAFFIC SHALL BE ENCASED IN RIGID PLASTIC OR CONCRETE PIPE SLEEVES.
3. A 77 (3") SPACING SHALL BE MAINTAINED BETWEEN ADJACENT CONDUITS.
4. PVC CONDUIT SHALL BE PRIMED AND GLUED TO FORM A WATERTIGHT SEAL.
5. PROVIDE 77 (3") CONCRETE ENCASEMENT AROUND PVC CONDUITS AT ALL ROADWAY AND DRIVEWAY CROSSINGS TO 1524 (5') BEYOND EDGE OF PAVEMENT, TYPICAL.
6. TRENCH EXCAVATION AND BACKFILL SHALL BE PAID INCIDENTAL TO ITEM 678.23 WIRED CONDUIT.
7. 50mm OF TEMP. PAVEMENT SHALL BE USED TO TEMPORARY PATCH TRENCH AFTER CONDUIT IS INSTALLED. TEMPORARY PAVEMENT REQUIRED FOR TRENCH SHALL BE PAID AS ITEM 900.680 SPECIAL PROVISION (BITUMINOUS CONCRETE PAVEMENT, SMALL QUANTITY). PAY LIMIT FOR PAVEMENT PATCH SHALL BE THE LESSER OF CONDUIT DIAMETER + 0.6M OR THE TRENCH WIDTH TIMES THE LENGTH OF THE TRENCH.

Stantec

Metric

GENERAL NOTES AND SPECIFICATIONS:

1. THE SCOPE OF WORK IS TO PROVIDE ALL LABOR, MATERIALS, SERVICES, SUPPLIES, TOOLS, EQUIPMENT, TRANSPORTATION, AND FACILITIES NECESSARY TO FURNISH AND INSTALL COMPLETE ELECTRICAL WORK AS CALLED FOR ON THE DRAWINGS, SPECIFIED, OR AS MAY REASONABLY BE IMPLIED AS BEING INCIDENTAL TO THIS WORK.
2. SECURE AND PAY COSTS OF PERMITS, CERTIFICATES, LICENSES, INSPECTIONS, AND APPROVALS.
3. DRAWINGS ARE DIAGRAMMATIC AND INDICATE THE GENERAL ARRANGEMENT OF WORK. BASIC DESIGN CONCEPTS INDICATED ARE TO BE EITHER FOLLOWED OR BETTERED. WORK IS INTENDED TO INCLUDE ITEMS NECESSARY FOR PROPER OPERATION AND COMPLETION. FIELD VERIFY ALL LOCATIONS, ELEVATIONS, AND DIMENSIONS.
4. EXECUTE ALL WORK IN A NEAT AND WORKMANLIKE MANNER IN CONFORMANCE WITH BEST MODERN TRADE PRACTICE, BY COMPETENT, EXPERIENCED MECHANICS, PRESENTING A NEAT APPEARANCE WHEN COMPLETED. REPLACE WORK NOT APPROVED BY OWNER WITHOUT ADDITIONAL CHARGE.
5. ALL MATERIALS AND INSTALLATION SHALL BE IN ACCORDANCE WITH THE LATEST EDITION OF THE NATIONAL ELECTRICAL CODE, AND ALL CODES, REGULATIONS AND REQUIREMENTS OF ALL MUNICIPAL, STATE, FEDERAL AND OTHER PUBLIC OR PRIVATE AUTHORITIES WHICH HAVE JURISDICTION. IN EACH CASE, CODES ARE MINIMUM REQUIREMENTS.
6. FABRICATION DRAWINGS: SUBMIT COMPLETE CATALOG INFORMATION FOR ALL MATERIALS AND EQUIPMENT TO BE PURCHASED AND USED ON THIS PROJECT, AS SPECIFIED BY THE DRAWINGS. DO NOT INSTALL MATERIALS OR EQUIPMENT WITHOUT APPROVAL BY THE OWNER/ENGINEER. UNAPPROVED MATERIAL ALREADY INSTALLED SHALL BE SUBJECT TO REMOVAL AND REPLACEMENT WITH APPROVED MATERIALS AT THE CONTRACTOR'S EXPENSE. THE CONTRACTOR IS RESPONSIBLE FOR INSURING THAT APPROVED SUBSTITUTE ITEMS WILL FIT INTO AVAILABLE SPACES AND FOR ANY EXTRA CHARGES BY OTHER TRADES.
7. AS THERE MAY BE VARIOUS CONDITIONS AT THE SITE WHICH DO NOT SHOW ON THE ACCOMPANYING DRAWINGS, OR WHICH ARE AT VARIANCE WITH THE CONDITIONS INDICATED ON THE DRAWINGS, IT IS STRONGLY ENCOURAGED THAT EACH BIDDER VISIT THE SITE AND ACQUAINT THEMSELVES WITH EXISTING CONDITIONS AND TAKE THESE CONDITIONS INTO CONSIDERATION WHEN PREPARING THEIR BID. EACH BIDDER MAY OBTAIN INFORMATION OR MAKE ANY MEASUREMENT DESIRED. LACK OF KNOWLEDGE RELATIVE TO EXISTING SITE CONDITIONS WILL NOT BE ALLOWED AS A BASIS FOR EXTRA COMPENSATION.
8. THE FINISHED INSTALLATION SHALL BE COMPLETE IN EVERY RESPECT AND DETAIL, TESTED AND LEFT READY IN PERFECT OPERATING CONDITION FOR THE OWNER'S USE.
9. MATERIALS AND EQUIPMENT SHALL BE LISTED BY UNDERWRITERS' LABORATORIES AND SHALL BE INSTALLED IN ACCORDANCE WITH SUCH LISTINGS.
10. INSTALLATION SHALL BE MADE IN ACCORDANCE WITH MANUFACTURER'S RECOMMENDATIONS.
11. CONTRACTOR TO CONTACT DIGSAFE IN VERMONT PRIOR TO COMMENCING WORK.
12. CONTRACTOR TO CONTACT UTILITY COMPANY FOR COORDINATION OF NEW ELECTRICAL SERVICE.
13. WIRING: ALL WIRING BETWEEN THE METER AND/OR POWER SOURCE AND THE FIRST POLE AND/OR PULLBOX AND BETWEEN POLES AND/OR PULLBOXES SHALL BE COPPER AND SIZED AS SPECIFIED ON THE PLANS. ALL WIRE SHALL HAVE TYPE XHHW INSULATION OR EQUIVALENT.
14. GROUNDING: ALL CONDUIT MUST INCLUDE A GROUNDING CONDUCTOR. RIGID STEEL CONDUIT SHALL BE PROPERLY CONNECTED AT THE JOINTS SO AS TO BE WATERTIGHT AND MAINTAIN ELECTRICAL CONTINUITY AND HAVE GROUNDING BUSHINGS SO AS TO ACT AS A GROUND CONDUCTOR.
15. ALUMINUM WIRE SHALL NOT BE USED FOR GROUND WIRE.
16. PULLBOXES: FOR DETAILS SEE VTrans STANDARD SHEET E-173.
17. THE LOAD ON EACH BRANCH OF A THREE WIRE CIRCUIT SHALL BE AS BALANCED AS POSSIBLE, LOAD TO NEUTRAL.
18. THE LAST CONCRETE POLE BASE AT THE END OF EACH CIRCUIT AND SOME PULLBOXES SHALL HAVE A CONDUIT SWEEP WITH CAP INSTALLED FOR FUTURE USE.
19. THE CONTRACTOR SHALL BE RESPONSIBLE FOR OBTAINING NECESSARY ELECTRICAL PERMITS.

PROJECT NAME:	DANVILLE
PROJECT NUMBER:	F EGC 028-3(32)
FILE NAME: ...\PlotFiles\lighting-det02.ptf	PLOT DATE: 1/18/2011
DESIGN SUPERVISOR: GARY SANTY	DRAWN BY: STANTEC
DESIGNED BY: STANTEC	CHECKED BY: STANTEC
LIGHTING DETAILS SHEET LTD-3	SHEET 190 OF 306

1/18/2011 11:54:22 PM v:\9533\active\95300033.0192\highway\PlotFiles\lighting-det02.ptf

PANEL No. LP

BUS 125A
PANEL RATING 22 KAIC
SUPPLY VOLTAGE 120/208V
SERVICE 1 PHASE, 3 WIRE

LOCATION ROUTE 2 & PARK
MOUNTING PEDESTAL
DRAWING No.

WIRING WIRE	WIRING COND	DESCRIPTION	VA OR W øA	VA OR W øB	BREAKER POLE	BREAKER A	CKT. NO	BUS CONN	CKT. NO	BREAKER POLE	BREAKER A	VA OR W øA	VA OR W øB	DESCRIPTION	WIRING COND	WIRING WIRE
SEE ONE-LINE		STREET LIGHTS	720		1	30	1	x	2	1	30	240		STREET LIGHTS	SEE	ONE-LINE
		STREET LIGHTS		720	1	30	3	x	4	1	30		240	STREET LIGHTS		
SEE ONE-LINE		STREET LIGHTS	240		1	30	5	x	6	1	30	600		STREET LIGHTS	SEE	ONE-LINE
		STREET LIGHTS		360	1	30	7	x	8	1	30		720	STREET LIGHTS		
SEE ONE-LINE		STREET LIGHTS	360		1	30	9	x	10	1	30			SPARE		
		STREET LIGHTS		480	1	30	11	x	12	1	30			SPARE		
SEE ONE-LINE		STREET LIGHTS	360		1	30	13	x	14	1	30			SPARE		
		STREET LIGHTS		240	1	30	15	x	16	1	30			SPARE		
		SPARE			1	20	17	x	18	1	20			SPARE		
		TOTAL 1	1680	1800					TOTAL 2			840	960			
		TOTAL 2	840	960												
		TOTAL 1 + 2	2520	2760												
		CONN. LOAD TOTAL	5280													
		AMPERES	22													

MAIN BREAKER 100A
FEEDER ENTRANCE BOTTOM
FEEDER SIZE SEE ONE LINE
SOURCE TRANSFORMER
PANEL TYPE BOLT-ON

MAIN LUGS N/A
ENCLOSURE TYPE NEMA 3R
ACCESSORIES

PANEL No. GRN

BUS 225A
PANEL RATING 22 KAIC
SUPPLY VOLTAGE 120/208V
SERVICE 1 PHASE, 3 WIRE

LOCATION ROUTE 2 & PARK
MOUNTING PEDESTAL
DRAWING No.

WIRING WIRE	WIRING COND	DESCRIPTION	VA OR W øA	VA OR W øB	BREAKER POLE	BREAKER A	CKT. NO	BUS CONN	CKT. NO	BREAKER POLE	BREAKER A	VA OR W øA	VA OR W øB	DESCRIPTION	WIRING COND	WIRING WIRE
SEE ONE-LINE		STREET LIGHTS	480		1	30	1	x	2	1	30	600		STREET LIGHTS	SEE	ONE-LINE
		STREET LIGHTS		480	1	30	3	x	4	1	30		600	STREET LIGHTS		
SEE ONE-LINE		VENDOR RECPS	1600		1	20	5	x	6	1	20	900		HOLIDAY RECPS	SEE	ONE-LINE
SEE ONE-LINE		VENDOR RECPS		1600	1	20	7	x	8	1	20		600	HOLIDAY RECPS	SEE	ONE-LINE
SEE ONE-LINE		VENDOR RECPS	1600		1	20	9	x	10	1	20	600		HOLIDAY RECPS	SEE	ONE-LINE
SEE ONE-LINE		VENDOR RECPS		1600	1	20	11	x	12	1	20		900	HOLIDAY RECPS	SEE	ONE-LINE
SEE ONE-LINE		VENDOR RECPS	1600		1	20	13	x	14	1	20	360		HOLIDAY RECPS	SEE	ONE-LINE
SEE ONE-LINE		VENDOR RECPS		1600	1	20	15	x	16	1	20		360	HOLIDAY RECPS	SEE	ONE-LINE
SEE ONE-LINE		VENDOR RECPS	1600		1	20	17	x	18	1	20	1600		VENDOR RECPS	SEE	ONE-LINE
SEE ONE-LINE		VENDOR RECPS		1600	1	20	19	x	20	1	20		1600	VENDOR RECPS	SEE	ONE-LINE
SEE ONE-LINE		VENDOR RECPS	1600		1	20	21	x	22	1	20	1600		VENDOR RECPS	SEE	ONE-LINE
SEE ONE-LINE		VENDOR RECPS		1600	1	20	23	x	24	1	20		1600	VENDOR RECPS	SEE	ONE-LINE
SEE ONE-LINE		VENDOR RECPS	1600		1	20	25	x	26	1	20	1600		VENDOR RECPS	SEE	ONE-LINE
SEE ONE-LINE		VENDOR RECPS		1600	1	20	27	x	28	1	20		1600	VENDOR RECPS	SEE	ONE-LINE
SEE ONE-LINE		VENDOR RECPS	1600		1	20	29	x	30	1	20	1600		VENDOR RECPS	SEE	ONE-LINE
		SPARE			1	20	31	x	32	1	20			SPARE		
		SPARE			1	20	33	x	34	1	20			SPARE		
		SPARE			1	20	35	x	36	1	20			SPARE		
		SPARE			1	20	37	x	38	1	20			SPARE		
		SPARE			1	20	39	x	40	1	20			SPARE		
		SPARE			1	20	41	x	42	1	20			SPARE		
		TOTAL 1	11680	10080					TOTAL 2			8860	7260			
		TOTAL 2	8860	7260												
		TOTAL 1 + 2	20540	17340												
		CONN. LOAD TOTAL	37880													
		AMPERES	158													
		DEMAND AMPS	112													

MAIN BREAKER 150A
FEEDER ENTRANCE BOTTOM
FEEDER SIZE SEE ONE LINE
SOURCE TRANSFORMER
PANEL TYPE BOLT-ON

MAIN LUGS N/A
ENCLOSURE TYPE NEMA 3R
ACCESSORIES PHOTO CELL
TIME CLOCK
CONTACTOR

TYPICAL ELECTRIC HANDHOLE EQUAL TO CDR SYSTEMS CORP. 432 x 762 (17" x 30") SERIES, OPEN BOTTOM. FLUSH MOUNT BOLTED COVER, WITH COVER LOGO TO READ 'ELECTRIC'. INSTALL FLUSH WITH GRADE OR SIDEWALK. CAT. NUMBER PA-14-WL-D, COLOR - GREEN.

HANDHOLE NOTES:

1. HH -12 AND HH-G2 SHALL BE EQUAL TO 24"x 36" / 610 x 914 SERIES.
2. ALL OTHER HANDHOLES, UNLESS NOTED, SHALL BE 17"x 30" / 432 x 762 SERIES.
3. HANDHOLES ARE PAID AS ITEM 678.26

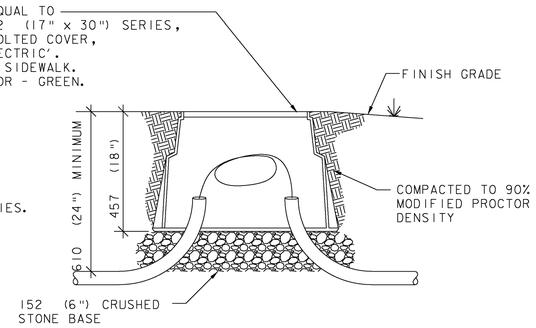

TYPICAL SECTION AT HANDHOLE
NOT TO SCALE

CONDUIT & CONDUCTOR SCHEDULE

KEY	CONDUIT SIZE	CONDUCTORS FOR FIXTURES	CONDUCTORS FOR RECEPTACLES	CONDUCTORS FOR GROUND
A	53 (2")	2#6		1#6G
AR	53 (2")	2#6	2#10	1#6G
B	53 (2")	3#4		1#6G
BR	53 (2")	3#6	4#10	1#6G
BR2	53 (2")	6#6	8#10	1#6G
C	53 (2")	3#2		1#6G
D	53 (2")	6#2		1#6G
E	53 (2")	1100 kg PULLCORD		
F	103 (4")	6#2		1#6G
G	103 (4")	6#6		1#6G
H	103 (4")	3#2 & 3#6		1#6G
I	103 (4")	1100 KG PULLCORD		
J	103 (4")	3 #2		1#6G
K	103 (4")	3 # 4/0		1#4G
L	78 (3")	3#6	11#10	1#6G
M	78 (3")		12#6, 8#8, 6#10	1#6G
N	78 (3")		12#6, 16#8, 16#10	1#6G

SCHEDULE (CONT.)

KEY	CONDUIT SIZE	CONDUCTORS FOR RECEPTACLES	CONDUCTORS FOR GROUND
R	50 (2")	2#10	1#10G
R2	50 (2")	4#10	1#10G
VR1	–	2#6	1#6G
VR2	–	4#6	1#6G
VR3	–	6#6	1#6G
VR4	–	8#6	1#6G
VR5	–	10#6	1#6G
VR6	–	12#6	1#6G
VR7	–	12#6, 2#8	1#6G
VR8	–	12#6, 4#8	1#6G
VR9	53 (2")	12#6, 4#8, 2#10	1#6G
VR10	53 (2")	12#6, 4#8, 4#10	1#6G
V1	–	2#8	1#6G
V2	–	4#8	1#6G
V3	–	4#8, 2#10	1#6G
V4	–	4#8, 4#10	1#6G
V5	–	4#8, 6#10	1#6G
V6	–	4#8, 8#10	1#6G

GENERAL NOTES:

1. MAXIMUM OF 270° IN TOTAL BENDS PERMITTED IN SINGLE RUN OF CONDUIT.
2. LIGHTS SHALL BE FUSED AT BASE WITH Y-TYPE FUSE KIT (EQUAL TO HOMAC [FLOOD SEAL]) FYC-6 AND 10 AMP FUSE.
3. CIRCUIT CONDUCTORS INCLUDING NEUTRAL CONDUCTOR SHALL BE CLEARLY IDENTIFIED BY CORROSION RESISTANT TAGS INDICATING CIRCUIT NUMBER AND SOURCE AT EVERY POLE BASE, JUNCTION BOX, HANDHOLE AND TRANSFORMER.
4. ALL TAP CONNECTIONS SHALL UTILIZE APPROVED DUAL-RATED PARALLEL TAP CONNECTOR EQUAL TO ILSCO GTA SERIES WITH INSULATED COVER FOR TAPS AT POLE BASE.
5. ALL CONNECTIONS IN HANDHOLE SHALL BE MADE WITH INSULATED WATERPROOF MECHANICAL SCREW-TYPE CONNECTORS. NO BARE OR COMPRESSION TYPE CONNECTORS MAY BE USED.
6. V SERIES WIRING SHALL BE LOCATED IN ASSOCIATED FIXTURE CONDUIT TYPE BR CONDUIT, UNLESS CONDUIT SIZE IS INDICATED IN SCHEDULE.

REPLACEMENT SHEETS ISSUED 02/24/2012

PROJECT NAME: DANVILLE
PROJECT NUMBER: F EGC 028-3(32)

FILE NAME: ...\PlotFiles\lighting-det03.ptf
DESIGN SUPERVISOR: GARY SANTY
DESIGNED BY: STANTEC
LIGHTING DETAILS SHEET LTD-4

PLOT DATE: 2/24/2012
DRAWN BY: STANTEC
CHECKED BY: STANTEC
SHEET 191 OF 306

Stantec

2/24/2012 2:06:08 PM V:\1953\active\95330033.002\Highway\PlotFiles\lighting-det03.ptf

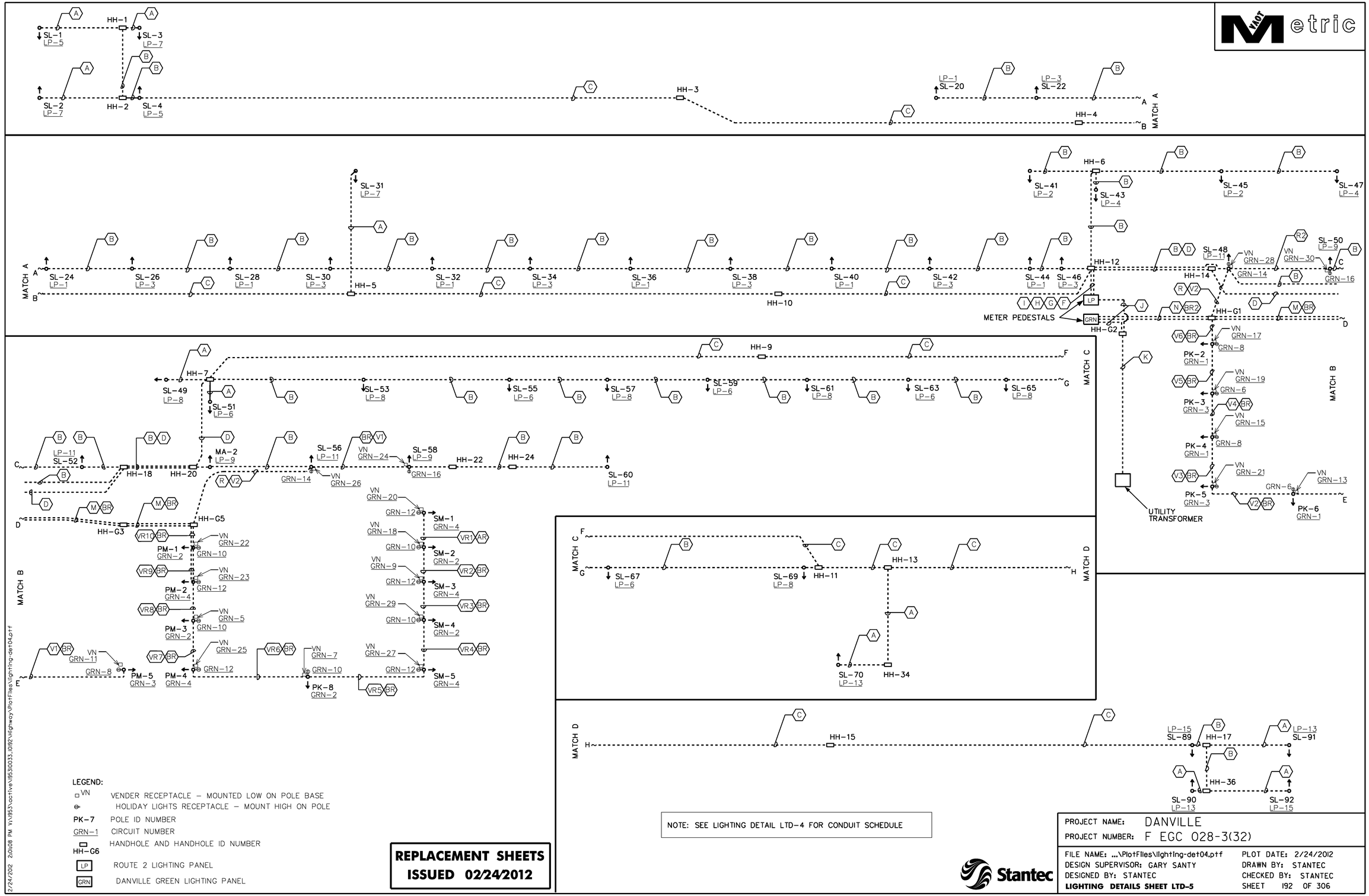

LEGEND:

- VN — VENDER RECEPTACLE – MOUNTED LOW ON POLE BASE
- HOLIDAY LIGHTS RECEPTACLE – MOUNT HIGH ON POLE
- PK-7 — POLE ID NUMBER
- GRN-1 — CIRCUIT NUMBER
- HH-G6 — HANDHOLE AND HANDHOLE ID NUMBER
- LP — ROUTE 2 LIGHTING PANEL
- GRN — DANVILLE GREEN LIGHTING PANEL

REPLACEMENT SHEETS ISSUED 02/24/2012

NOTE: SEE LIGHTING DETAIL LTD-4 FOR CONDUIT SCHEDULE

PROJECT NAME: DANVILLE
PROJECT NUMBER: F EGC 028-3(32)

FILE NAME: ...\PlotFiles\lighting-det04.ptf
DESIGN SUPERVISOR: GARY SANTY
DESIGNED BY: STANTEC
LIGHTING DETAILS SHEET LTD-5

PLOT DATE: 2/24/2012
DRAWN BY: STANTEC
CHECKED BY: STANTEC
SHEET 192 OF 306

Stantec

2/24/2012 2:06:08 PM V:\1853\active\185310033.0092\Highway\PlotFiles\lighting-det04.ptf

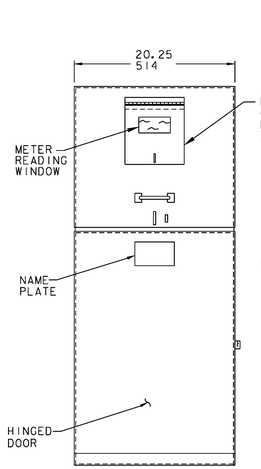

FRONT VIEW

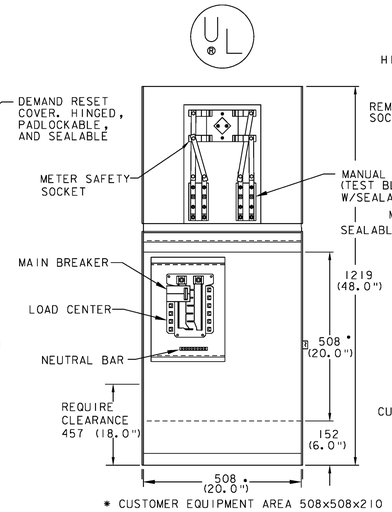

* CUSTOMER EQUIPMENT AREA 508x508x210

FRONT VIEW

LESS DOOR, DEADFRONT, AND COVER

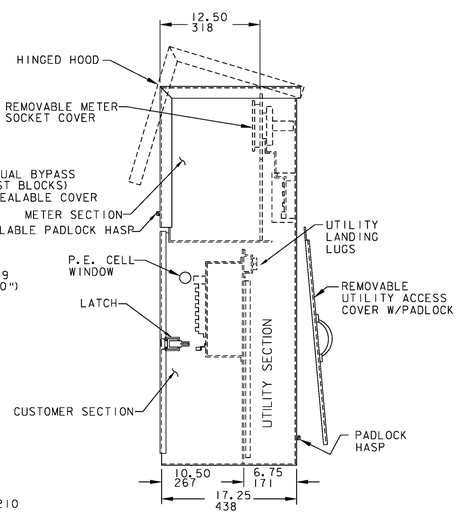

SIDE VIEW

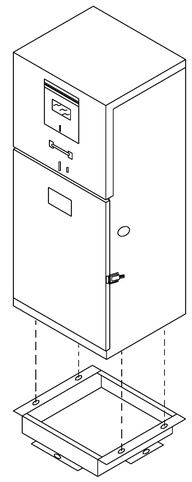

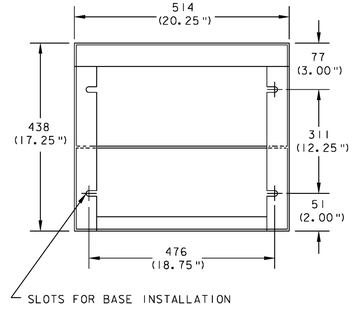

BOTTOM VIEW

MOUNTING SLOT DETAIL

METER PEDESTAL DETAILS

NOT TO SCALE

ELECTRICAL DEMOLITION NOTES

1. REMOVE AND DISCONNECT ALL EXISTING ELECTRICAL EQUIPMENT WITHIN AREAS INDICATED, UNLESS OTHERWISE NOTED TO REMAIN, INCLUDING LIGHTING FIXTURES, SWITCHES, EXPOSED CONDUIT, BRANCH CIRCUIT WIRING, DEVICE BOXES, DEVICE PLATES, ETC. ALL EXPOSED ABANDONED CONDUCTORS AND CONDUITS, CUT BACK, CAP AND ABANDON ALL CONDUITS AS REQUIRED. COORDINATE REMOVAL WITH ENGINEER.

2. EXISTING ELECTRICAL EQUIPMENT NECESSARY FOR EXISTING INSTALLATION, BUT PASSING THROUGH THE RENOVATED AREA, SHALL BE TEMPORARILY REHUNG AND PROTECTED DURING CONSTRUCTION. RESTORE, IF INTERRUPTED, ALL CONDUITS, BRANCH CIRCUITS AND FEEDERS PASSING THROUGH RENOVATED AREAS AND SERVICING UNDISTURBED AREAS.

3. CONTRACTOR SHALL CARRY ALL COSTS RELATING TO REMOVAL AND LAWFUL DISPOSAL OF ELECTRICAL EQUIPMENT, LIGHTING FIXTURES, CONDUIT, WIRING AND ASSOCIATED DEVICES/HARDWARE. PRIOR TO ACTUAL REMOVAL OF THE EQUIPMENT, NEW STREET LIGHTING SHALL BE TESTED AND OPERATIONAL PRIOR TO REMOVAL OF EXISTING STREET LIGHTING.

4. EQUIPMENT LAYOUT AND EXACT LAYOUT OF NEW LIGHTING FIXTURES SHALL BE DIRECTED BY THE ENGINEER/OWNER.

5. EXISTING ELECTRICAL DEVICES AND LIGHTING FIXTURES, SHOWN ON THE LIGHTING & LANDSCAPING PLANS, REPRESENT INFORMATION TAKEN FROM EXISTING PLANS FURNISHED BY THE OWNER AND A SITE SURVEY. THE CONDITION OF THE SITE MAY HAVE CHANGED. THE CONTRACTOR IS RESPONSIBLE FOR VISITING THE SITE TO EXAMINE ALL EXISTING CONDITIONS. NO EXTRA COMPENSATION OR TIME EXTENSION WILL BE PERMITTED BECAUSE OF LACK OF COMPLIANCE WITH THIS REQUIREMENT.

6. ALL WORK REQUIRED FOR THE DISMANTLING AND REMOVAL, OR MODIFICATION, OF EXISTING ELECTRICAL EQUIPMENT, LIGHTING CONDUIT, WIRING AND RELATED ITEMS FOR THEIR REPLACEMENT OR MODIFICATION AS HEREIN SPECIFIED OR AS MAY REASONABLY BE IMPLIED SHALL BE PAID INCIDENTAL TO ALL OTHER ELECTRICAL ITEMS.

METER PEDESTAL NOTES:

7. PROVIDE METER PEDESTAL EQUAL TO MYERS SERVICE PEDESTALS

CONTACT: MYERS POWER PRODUCTS
TEL: 800.733.7872
WEB: WWW.MYERSCUSTOM.COM

8. PANEL LP:
PROVIDE PEDESTAL EQUAL TO MEUG20A - 200A PANEL WITH 125A MAIN BREAKER,
22 KAIC, AND (18) CIRCUIT BREAKERS (SEE PANEL SCHEDULE FOR SIZES).

9. PANEL GRN:
PROVIDE PEDESTAL EQUAL TO MEUG 20A - 100A PANEL WITH 100A MAIN BREAKER, 22 KAIC, AND (18) CIRCUIT BREAKERS (SEE PANEL SCHEDULE FOR SIZES). PROVIDE P.E. CELL, ASTRONOMICAL
TIME CLOCK, TEST SWITCH AND A 6 POLE CONTACTOR FOR CONTROL OF HOLIDAY LIGHTING RECEPTACLES.

10. METER SOCKET AND UTILITY SERVICE ENTRANCE SECTION SHALL BE PER CENTRAL VERMONT PUBLIC SERVICE REQUIREMENTS.

11. PROVIDE PAD MOUNTING
BASE FOR CONCRETE FOUNDATION - MEUG20-BASE AND ANCHOR BOLTS - 714548 (QUANTITY 4 EACH)

12. ALL WORK REQUIRED TO INSTALL METER PEDESTALS INCLUDING EXCAVATION, CONCRETE FOUNDATION, AND BASE FOR CONCRETE FOUNDATIONS SHALL BE PAID AS ITEM 900.620 SPECIAL PROVISION (METER PEDESTAL)

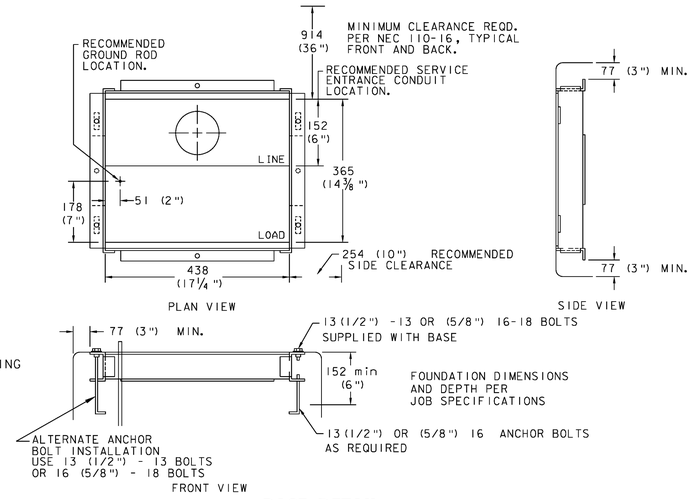

BASE DETAIL

PROJECT NAME:	DANVILLE
PROJECT NUMBER:	F EGC 028-3(32)
FILE NAME: ...\PlotFiles\lighting-det06.ptf	PLOT DATE: 1/18/2011
DESIGN SUPERVISOR: GARY SANTY	DRAWN BY: STANTEC
DESIGNED BY: STANTEC	CHECKED BY: STANTEC
LIGHTING DETAILS SHEET LTD-6	SHEET 193 OF 306

Stantec

1/18/2011 11:54:27 PM v:\1953\active\195300033_i092\highway\PlotFiles\lighting-det06.ptf

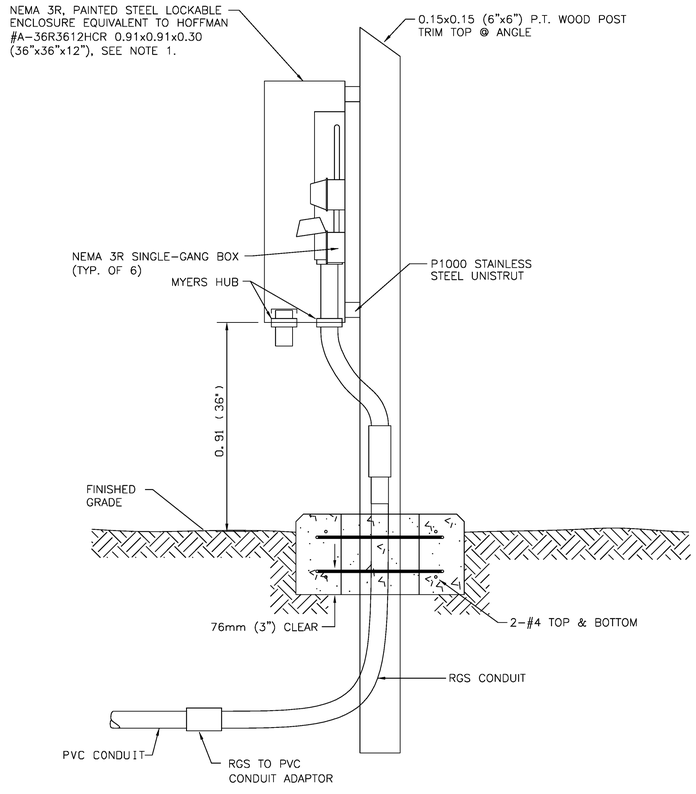

SIDE VIEW

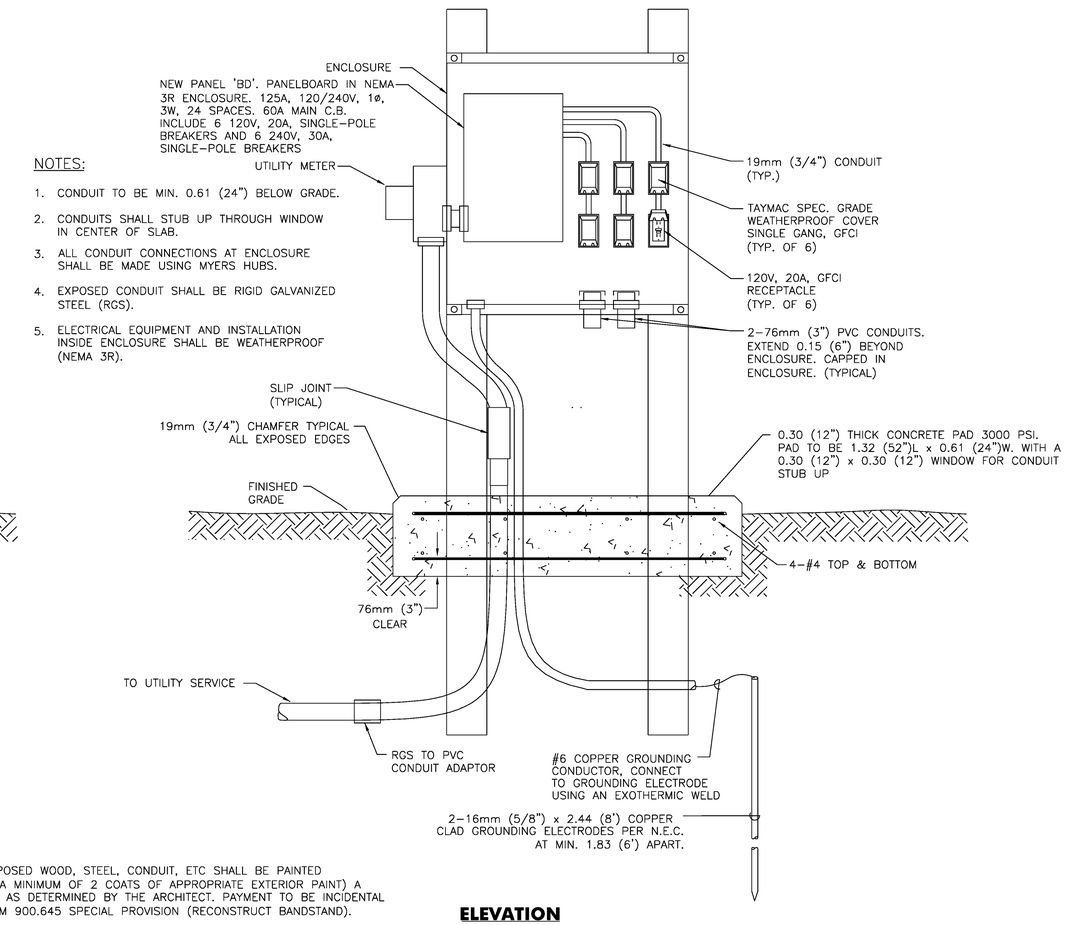

ELEVATION

NOTES:

1. CONDUIT TO BE MIN. 0.61 (24") BELOW GRADE.
2. CONDUITS SHALL STUB UP THROUGH WINDOW IN CENTER OF SLAB.
3. ALL CONDUIT CONNECTIONS AT ENCLOSURE SHALL BE MADE USING MYERS HUBS.
4. EXPOSED CONDUIT SHALL BE RIGID GALVANIZED STEEL (RGS).
5. ELECTRICAL EQUIPMENT AND INSTALLATION INSIDE ENCLOSURE SHALL BE WEATHERPROOF (NEMA 3R).

NOTES:

1. ALL EXPOSED WOOD, STEEL, CONDUIT, ETC SHALL BE PAINTED (WITH A MINIMUM OF 2 COATS OF APPROPRIATE EXTERIOR PAINT) A COLOR AS DETERMINED BY THE ARCHITECT. PAYMENT TO BE INCIDENTAL TO ITEM 900.645 SPECIAL PROVISION (RECONSTRUCT BANDSTAND).
2. ALL DIMENSIONS ARE IN METERS UNLESS OTHERWISE NOTED.
3. SEE LIGHTING AND LANDSCAPE LLP-6 FOR LOCATION.
4. PEDESTAL INCLUDING ALL LABOR AND MATERIALS SHALL BE PAID UNDER ITEM 900.620 SPECIAL PROVISION (METER PEDESTAL).

BANDSTAND POWER PEDESTAL DETAIL

NOT TO SCALE

Stantec

PROJECT NAME: DANVILLE	
PROJECT NUMBER: F EGC 028-3(32)	
FILE NAME: ...\PlotFiles\lighting-det07.ptf	PLOT DATE: 1/18/2011
DESIGN SUPERVISOR: GARY SANTY	DRAWN BY: STANTEC
DESIGNED BY: STANTEC	CHECKED BY: STANTEC
LIGHTING DETAILS SHEET LTD-7	SHEET 194 OF 306

1/18/2011 11:54:28 PM v:\1953\active\195300033.092\highway\PlotFiles\lighting-det07.ptf

NOTES:
1. LOCATION OF DANVILLE CIRCLE TO BE DETERMINED IN FIELD BY ARTIST. CONTRACTOR TO CONSULT ARTIST TO STAKE/FLAG ACTUAL PLACEMENT OF CIRCLE PRIOR TO INSTALLATION.
2. SITE CONTRACTOR RESPONSIBLE FOR SUBGRADE EXCAVATION AND LAYING OF BASE MATERIALS AND DRAIN IN CONSULTATION W/ARTIST AS TO DEPTH, LOCATION, AND LAYOUT.
3. AFTER INSTALLATION OF WALL, SITE CONTRACTOR RESPONSIBLE FOR LAYING GRAVEL BASE FOR BOULDERS AND SETTING BOULDERS IN PLACE UNDER SUPERVISION OF THE ARTIST.
4. FINISH GRADING TO CIRCLE EDGE, RESEEDING AND MULCHING BY CONTRACTOR.
5. CONSTRUCTION OF ACTUAL WALL BY ARTIST.

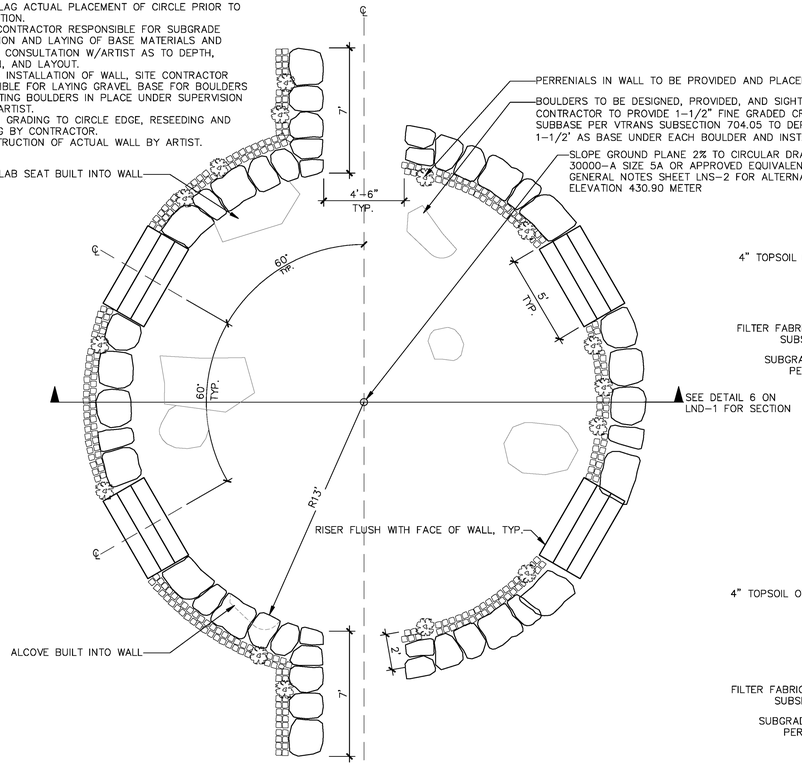

1 LND-1 DANVILLE CIRCLE PLAN
SCALE 1/4"=1'

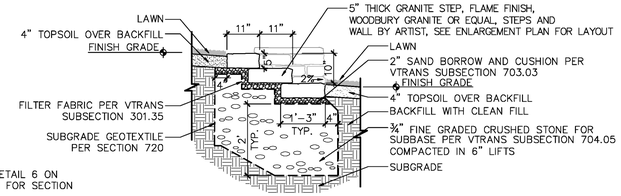

2 LND-1 DANVILLE CIRCLE STEPS LOWER WALL
SCALE: ½"=1'

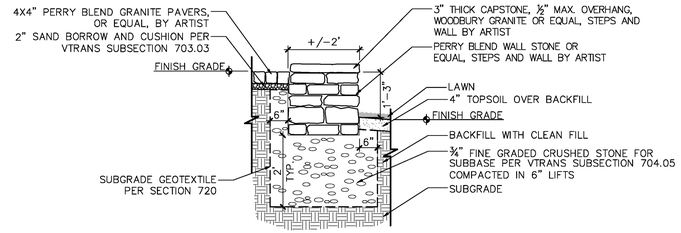

4 LND-1 DANVILLE CIRCLE LOWER WALL
SCALE: ½"=1'

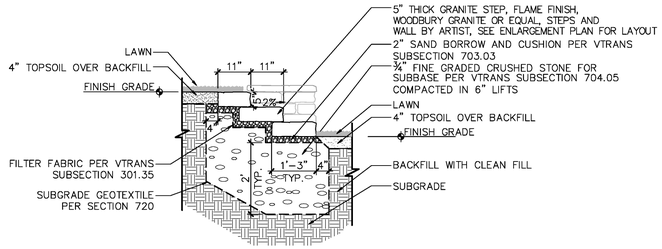

3 LND-1 DANVILLE CIRCLE STEPS UPPER WALL
SCALE: ½"=1'

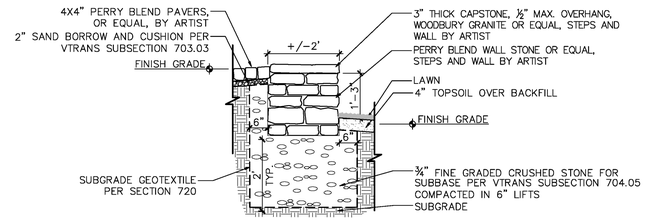

5 LND-1 DANVILLE CIRCLE UPPER WALL
SCALE: ½"=1'

NOTE:
ALL SPOT ELEVATIONS GIVEN IN METERS

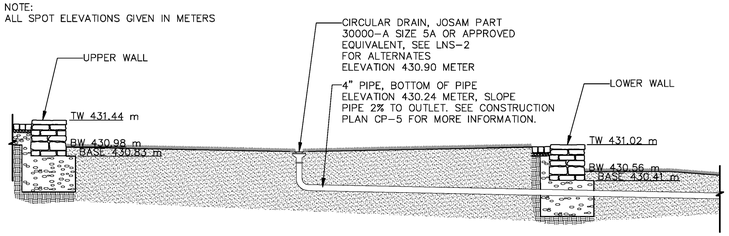

6 LND-1 DANVILLE CIRCLE SECTION
SCALE 1/4"=1'

ALL DETAILS CONTAINED HEREIN ARE THE SOLE RESPONSIBILITY OF THE ARTIST, ANDY WASSERMAN. LANDWORKS BEARS NO RESPONSIBILITY FOR THE STRUCTURAL INTEGRITY, FUNCTIONALITY, OR ACCESIBILITY OF THE DANVILLE CIRCLE.

NOTES:
1. ALL WORK ON THIS SHEET SHALL BE PAID UNDER ITEM 900.645 SPECIAL PROVISION (DANVILLE CIRCLE).
2. SEE LANDSCAPE GENERAL NOTES SHEET LNS-1 FOR MORE INFORMATION.
3. ALL DIMENSIONS IN FEET AND INCHES EXCEPT WHERE NOTED IN METERS.

Artist:
Andrea Wasserman
993 Darling Hill Road
Vershire, Vermont
05079
802 685 3208
asw@togethernet

LandWorks
228 Maple St. suite 32
Middlebury, VT 05753
phone: 802.388.3011
fax: 802.388.1950
www.landworksvt.com

PROJECT NAME: DANVILLE	
PROJECT NUMBER: F EGC 028-3(32)	
FILE NAME: LND 1	PLOT DATE: 1.19.2011
DESIGN SUPERVISOR: DR	DRAWN BY: RF
DESIGNED BY: AW	CHECKED BY: DR
LANDSCAPE DETAILS SHEET LND-1	SHEET 195 OF 306

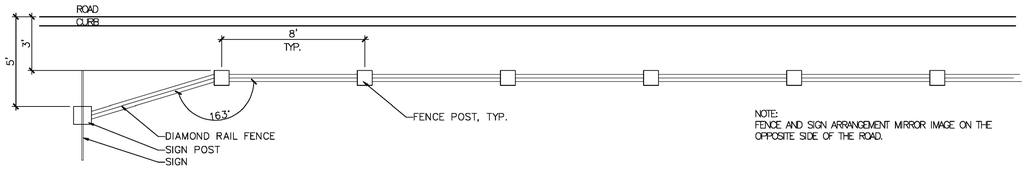

SIGN POST AND RAIL FENCE LAYOUT
SCALE: 1"=1'-0"

NOTE:
FENCE AND SIGN ARRANGEMENT MIRROR IMAGE ON THE OPPOSITE SIDE OF THE ROAD.

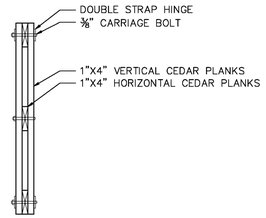

SECTION 1
SCALE: 1"=1'

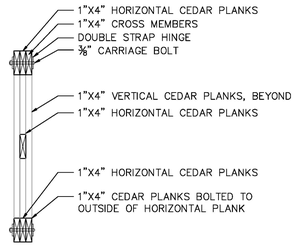

SECTION 2
SCALE: 1"=1'

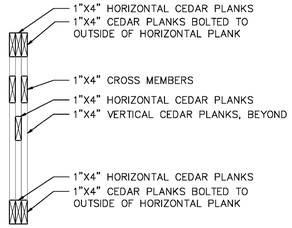

SECTION 3
SCALE: 1"=1'

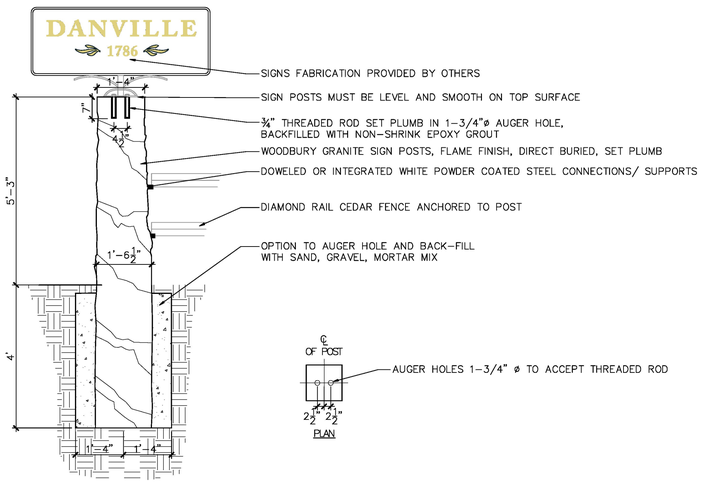

NOTES:
1. SIGNS PANELS AND ALL ASSOCIATED HARDWARE TO BE PROVIDED BY OTHERS.
2. CONTRACTOR RESPONSIBLE FOR POST INSTALLATION, PROVIDING LEVEL AND SMOOTH SURFACE ON TOP OF POST, AND AUGER HOLES TO ACCEPT RODS.
3. CONTRACTOR TO COORDINATE INSTALLATION OF SIGN PANELS AFTER POST INSTALLATION, INSTALLATION OF SIGN BY OTHERS.
4. CONTRACTOR RESPONSIBLE FOR CONNECTION TO FENCE.
5. RAILS TO BE LOCATED AS CLOSE TO POST AS POSSIBLE; USE SMOOTHEST SIDE OF POST TO ACCEPT RAIL.
6. SEE LLP-1 AND LLP-9 FOR SIGN POST AND FENCING PLAN LOCATION AT DANVILLE ENTRY.



WELCOME SIGN PANEL AT POST #23 AND #25



SAFE JOURNEY SIGN PANEL AT POST #24 AND #26

1 LND-2 WELCOME SIGN- GRANITE POSTS 23, 24, 25, 26
SCALE: ½"=1'

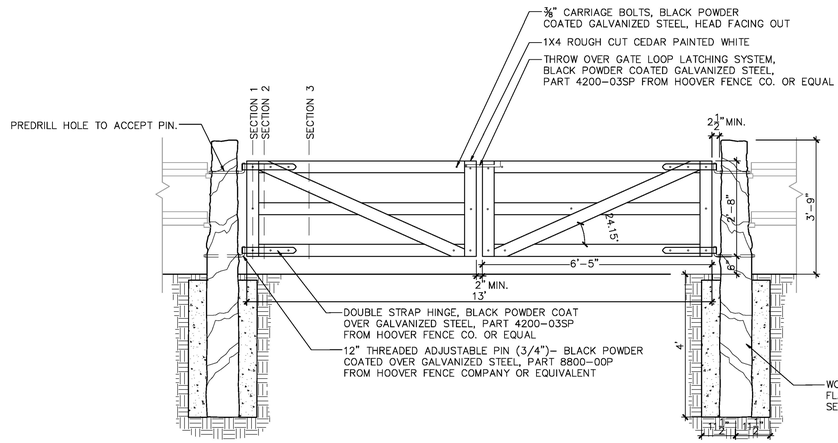

NOTE: ALL CEDAR IN GATE TO BE PAINTED WHITE.

3 LND-2 GATE AT SCHOOL
SCALE: ½"=1'

NOTES:
1. CONNECTOR DETAIL TO BE APPROVED BY LANDWORKS, RAILS TO LOCATED AS CLOSE TO THE POST AS POSSIBLE. USE STRAIGHTEST SIDE OF POST TO ACCEPT RAILS.
2. SEE LLP-1 AND LLP-9 FOR SIGN POST AND FENCING PLAN LOCATION AT DANVILLE ENTRY, AND DETAIL 1 ON LND-2 FOR LAYOUT.
3. SEE LLP-3 FOR FENCE LOCATION AND GATE CONNECTION AND DETAIL 3 ON LND-2 FOR GATE SPECIFICATIONS.

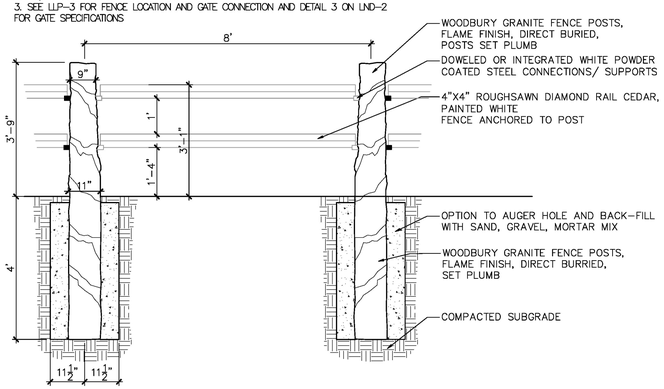

2 LND-2 GRANITE POST AND WOOD DIAMOND RAIL FENCE DETAIL
SCALE: ½"=1'

GENERAL NOTES:
1. ALL WORK ON THIS SHEET SHALL BE PAID UNDER ITEM 900.640 SPECIAL PROVISION (GRANITE POST AND WOOD DIAMOND RAIL FENCE).
2. SEE LANDSCAPE GENERAL NOTES SHEET LNS-1 FOR MORE INFORMATION.
3. FOR WOOD SURFACES "PAINTED WHITE", USE SIKKENS RUBBOL● SOLID DEK, COLOR WHITE 100.
4. SEE LANDSCAPE GENERAL NOTES SHEET LNS-2 FOR APPROVED MATERIAL ALTERNATES.
5. ALL DIMENSIONS ARE IN FEET AND INCHES.

LandWorks
228 Maple St. suite 32
Middlebury, VT 05753
phone: 802.388.3011
fax: 802.388.1950
www.landworksvt.com

PROJECT NAME:	DANVILLE
PROJECT NUMBER:	F EGC 028-3(32)
FILE NAME: LND 2	PLOT DATE: 1.19.2011
DESIGN SUPERVISOR: DR	DRAWN BY: RF
DESIGNED BY: LW	CHECKED BY: DR
LANDSCAPE DETAILS SHEET LND-2	SHEET 196 OF 306

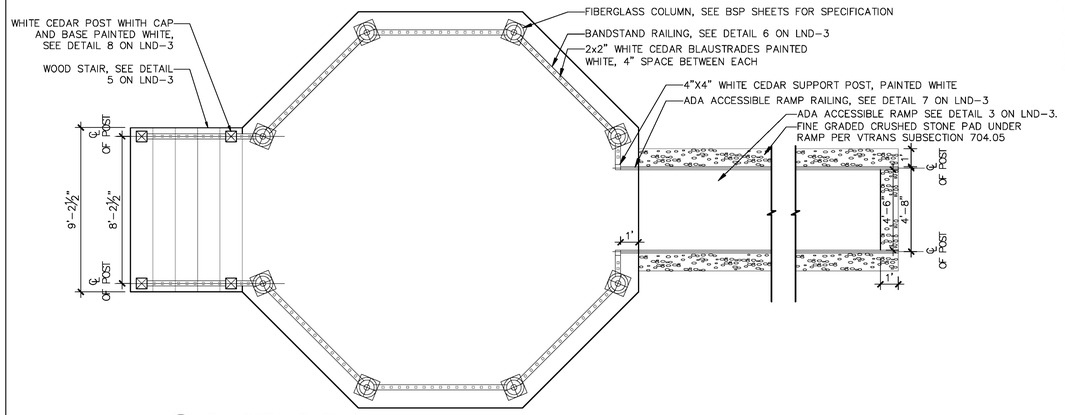

1 LND-3 BANDSTAND PLAN
SCALE: 1/4"=1'-0"

NOTES:
1. ALL SLEEPERS TO BE ATTACHED USING ¼" X 2" HOT-DIPPED GALVINIZED STEEL OR STAINLESS STEEL CONCRETE SCREWS INTO EXISITING CONCRETE BASE.
2. ALL DECKING TO BE INSTALLED USING ¼" X 2-1/2" DECK SCREWS, COUTERSUNK.

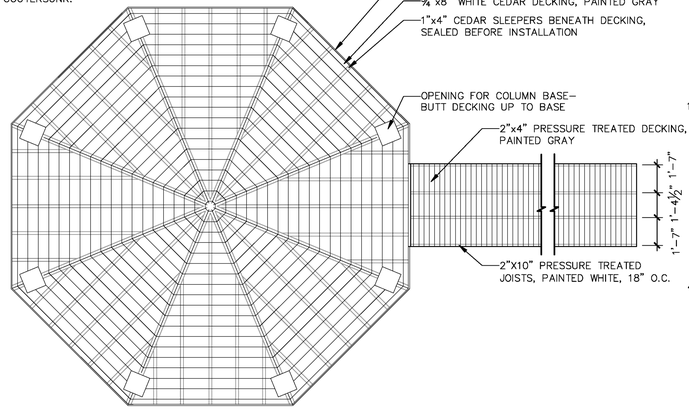

4 LND-3 BANDSTAND DECKING PLAN
SCALE: 1/4"=1'-0"

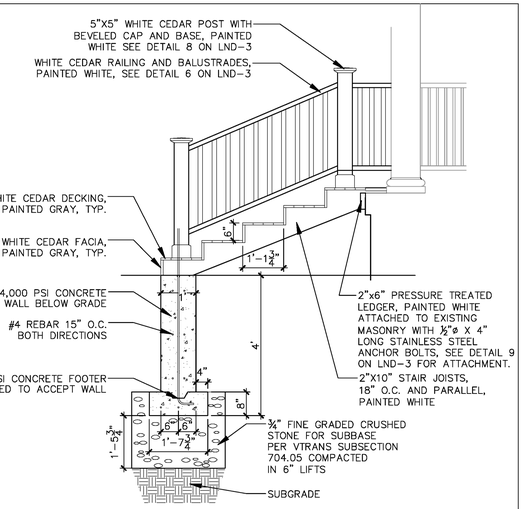

5 LND-3 BANDSTAND STAIR SECTION
SCALE: 1/2"=1'-0"

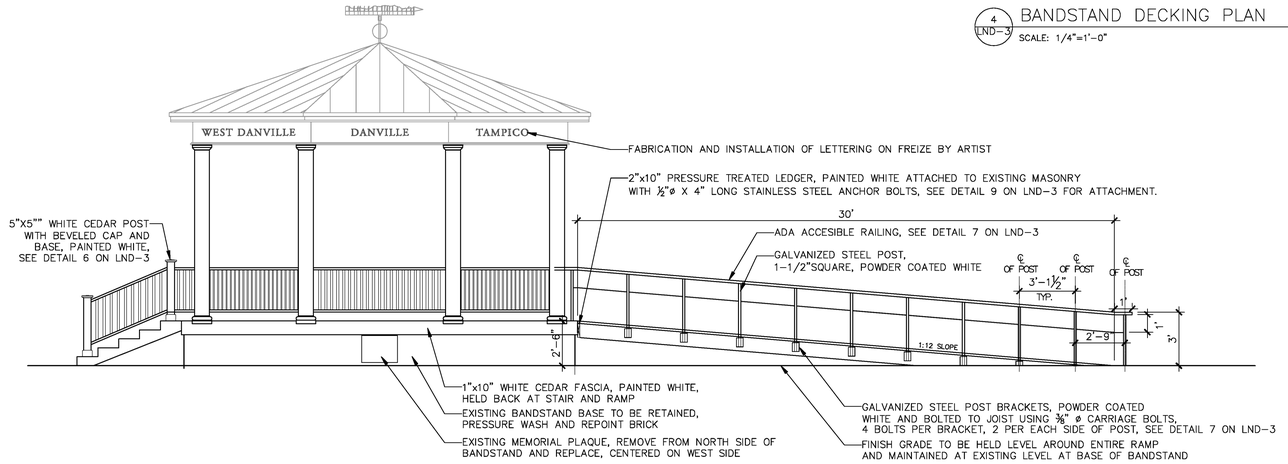

2 LND-3 BANDSTAND WEST ELEVATION
SCALE: 1/4"=1'-0"

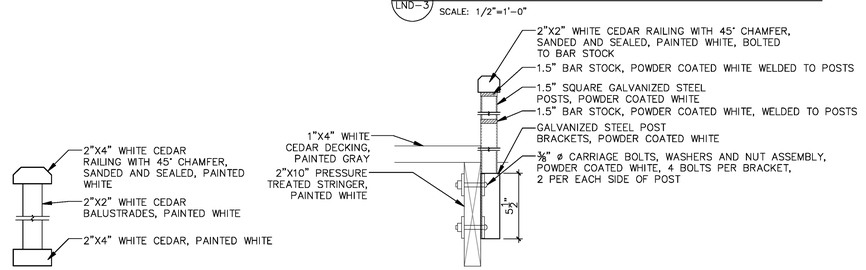

7 LND-3 BANDSTAND RAMP RAILING SECTION
SCALE: 2"=1'

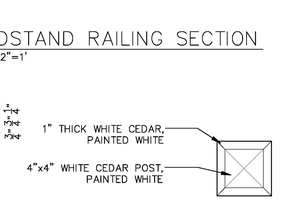

6 LND-3 BANDSTAND RAILING SECTION
SCALE: 2"=1'

8 LND-3 BANDSTAND RAILING POST SECTION
SCALE: 2"=1'

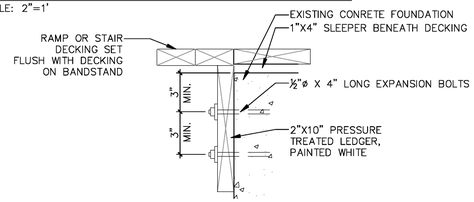

9 LND-3 LEDGER ATTACHMENT
SCALE: 2"=1'

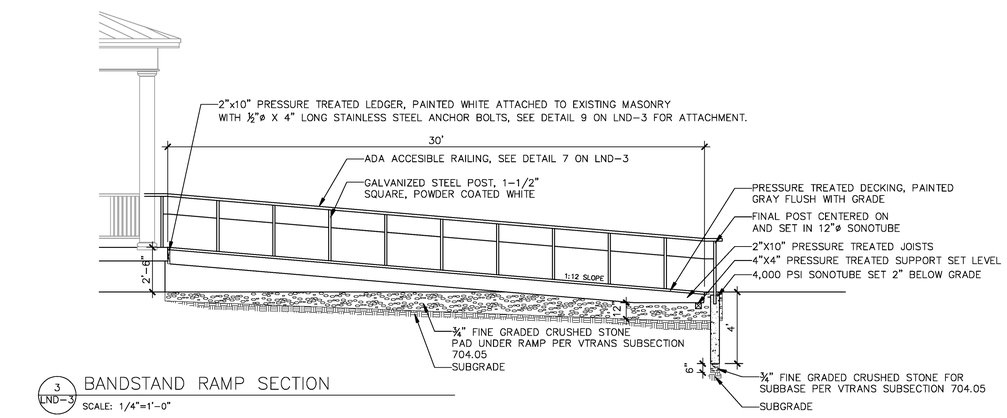

3 LND-3 BANDSTAND RAMP SECTION
SCALE: 1/4"=1'-0"

GENERAL BANDSTAND NOTES:
1. FOR ALL WOOD SURFACES, ALL SURFACES ARE TO PAINTED/SEALED AS SPECIFIED IN DRAWINGS PRIOR TO INSTALLATION. ANY WOOD SURFACES EXPOSED BEFORE OR AFTER INSTALLATION TO BE PAINTED/SEALED AS SPECIFIED IN DRAWINGS.
2. FOR WHITE CEDAR, ALL WOOD SURFACES TO BE PAINTED WHITE OR GRAY, AS SPECIFIED IN THE DRAWINGS (ITEM 3 AND 4 BELOW)
3. FOR WOOD SURFACES "PAINTED WHITE", USE SIKKENS RUBBOL® SOLID DEK, COLOR WHITE 100.
4. FOR WOOD SURFACES "PAINTED GRAY", USE SIKKENS CETOL® SRD SEMI-TRANSPARENT STAIN, COLOR FOG GRAY.
5. SEE LANDSCAPE GENERAL NOTES SHEET LNS-2 FOR APPROVED MATERIAL ALTERNATES.
6. ALL WORK ON THIS SHEET SHALL BE PAID UNDER ITEM 900.645 SPECIAL PROVISION (RECONSTRUCT BANDSTAND).
7. SEE LANDSCAPE GENERAL NOTES SHEET LNS-1 FOR MORE INFORMATION.

LandWorks
228 Maple St. suite 32
Middlebury, VT 05753
phone: 802.388.3011
fax: 802.388.1950
www.landworksvt.com

PROJECT NAME: DANVILLE
PROJECT NUMBER: F EGC 028-3(32)

FILE NAME: LND 3ALT	PLOT DATE: 1.19.2011
DESIGN SUPERVISOR: DR	DRAWN BY: RF
DESIGNED BY: LANDWORKS	CHECKED BY: DR
LANDSCAPE DETAILS SHEET LND-3	SHEET 197 OF 306

PLANTING SCHEDULE

KEY	COMMON NAME	BOTANICAL NAME	QTY.	SIZE	COMMENTS
H	Daylily	Hemerocallis x. hybrida	163	2 qt. pots	Mix of 'Happy Returns' and 'Stella D'oro'
RA	Gro-low Fragrant Sumac	Rhus Aromatica 'Gro-low'	19	1 gal.	

NOTES:
1. SEE ENGINEERING PLANS FOR ISLAND LOCATIONS IN ROADWAY.
2. SEE DETAIL 5 ON LND-5 FOR SPECIFICATIONS
3. STAMPED CONCRETE IN ISLANDS SHALL BE PAID AS ITEM 900.675 SPECIAL PROVISION (STAMPED CONCRETE ISLAND 125MM).

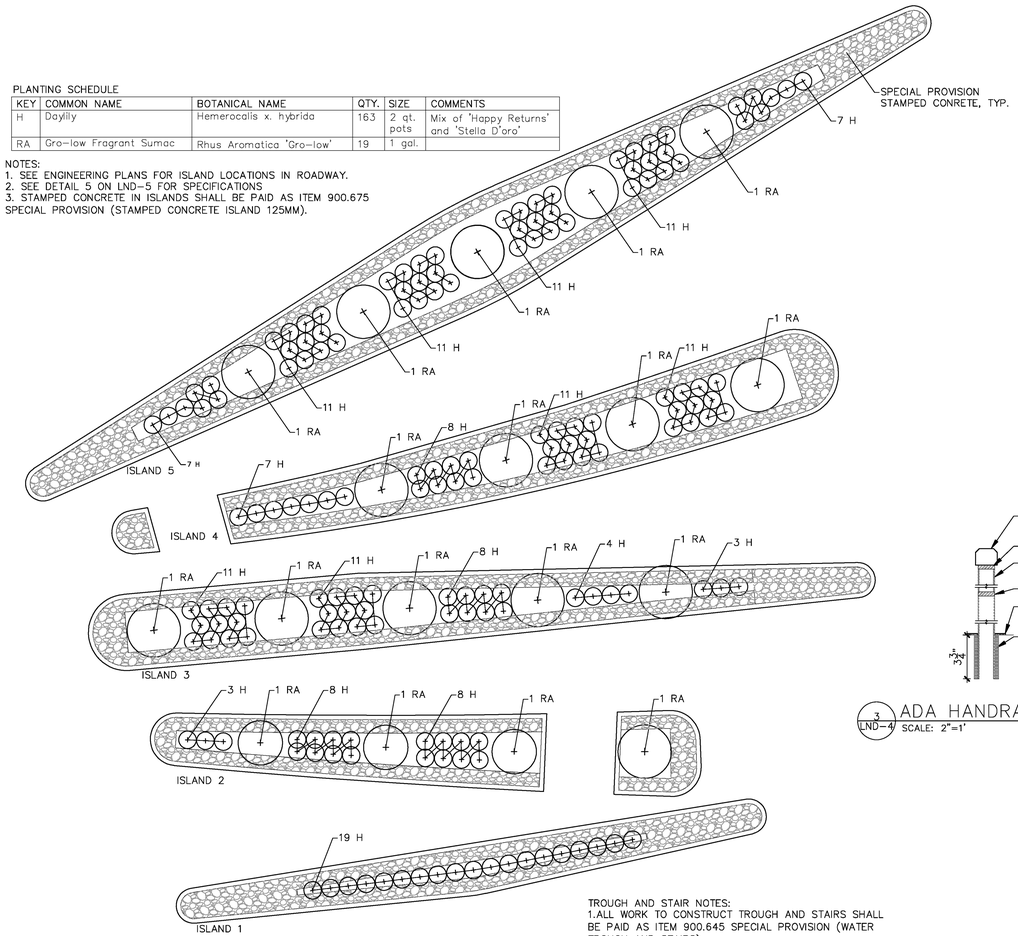

1 LND-4 ISLAND PLANTING PLAN
SCALE 1/8"=1'

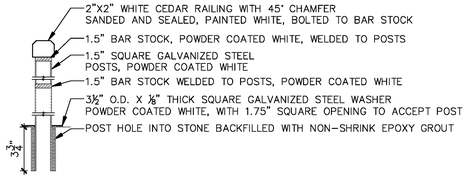

3 LND-4 ADA HANDRAIL SECTION
SCALE: 2"=1'

AMPHITHEATER NOTES:
1.ALL WORK TO CONSTRUCT AMPHITHEATRE SHALL BE PAID AS ITEM 900.645 SPECIAL PROVISION (FIELDSTONE WALL).
2. SITE CONTRACTOR RESPONSIBLE FOR SUBGRADE EXCAVATION AND LAYING OF BASE MATERIALS IN CONSULTATION PROJECT LANDSCAPE ARCHITECT AS TO DEPTH, LOCATION, AND LAYOUT.
3. FINISH GRADING TO AMPHITHEATER EDGE, RESEEDING, PLANTING, AND MULCHING BY CONTRACTOR.
4. CONSTRUCTION OF ACTUAL WALL BY OTHERS.
5. PAVERS AND WALL STONE AT AMPHITHEATER TO MATCH THAT USED AT DANVILLE CIRCLE STONE AS CONSTRUCTED. ALL STONE FLAME FINISH.
6. SUB-CONTRACTOR TO SUPPLY STONE SAMPLE FOR CAP AND WALL FOR LANDSCAPE ARCHITECT'S APPROVAL PRIOR TO INSTALLATION.
7. SUB-CONTRACTOR TO CONSTRUCT 6' LENGTH OF MOCK-UP SECTION FOR APPROVAL BY LANDSCAPE ARCHITECT. MOCK-UP TO BECOME PART OF FINAL WALL W/ APPROVAL BY LANDSCAPE ARCHITECT.
8. FINAL LOCATION OF PLANTING MATERIALS ARE TO BE APPROVED BY PROJECT LANDSCAPE ARCHITECT PRIOR TO PLANTING.
9. SEE LANDSCAPE GENERAL NOTES SHEET LNS-1 FOR MORE INFORMATION.

PLANTING SCHEDULE

KEY	BOTANICAL NAME	COMMON NAME	QTY.	SIZE	COMMENTS
CA	Clethra alnifolia	Hummingbird Summersweet	9	2 gallon	Space as shown
KA	Kalmia latifolia 'Tinkerbell'	Sheep Laurel	4	2 gallon	Space as shown
WF	Weigela florida	'Midnight Wave' Weigela	16	2 gallon	Space as shown
PF	Potentilla fruticosa	'Abbotswood' Bush Cinquefoil	10	2 gallon	Space as shown
COA	Calamagrostis acutiflora	'Overdam' Feather Reed Grass	4	1 gallon	Space as shown
CC	Campanule carpatica	White Clips	32	2 qt. pots	Space as shown
PB	Penstemon barbatus	'Prairie Dusk' Scarlet Bugler	8	2 qt. pots	Space as shown

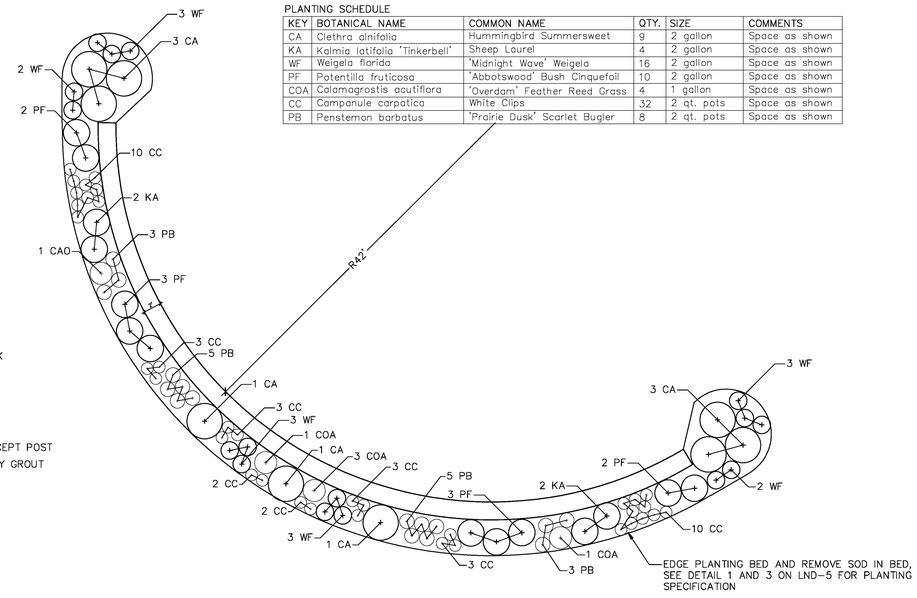

5 LND-4 AMPHITHEATER ENLARGEMENT PLAN
SCALE 1/8"=1'

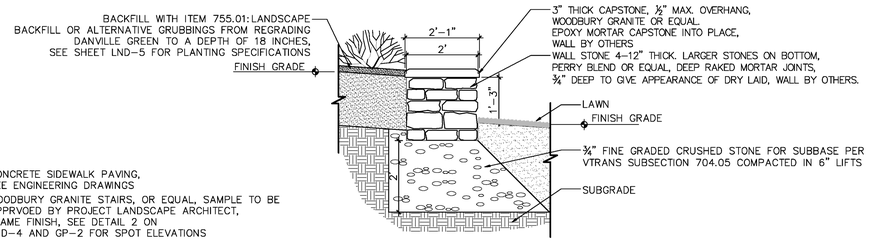

6 LND-4 AMPHITHEATER WALL
SCALE: ½"=1'

TROUGH AND STAIR NOTES:
1.ALL WORK TO CONSTRUCT TROUGH AND STAIRS SHALL BE PAID AS ITEM 900.645 SPECIAL PROVISION (WATER TROUGH AND STAIRS).
2. SEE LANDSCAPE GENERAL NOTES SHEET LNS-1 FOR MORE INFORMATION.
3. STONE USED FOR TROUGH PAVING AND STAIRS SHALL MATCH THAT USED AT THE DANVILLE CIRCLE AND AMPHITHEATER AS CONSTRUCTED.
3. FOR WOOD SURFACES "PAINTED WHITE", USE SIKKENS RUBBOL● SOLID DEK, COLOR WHITE 100.
4. SEE LNS-2 FOR APPROVED MATERIAL ALTERNATES.

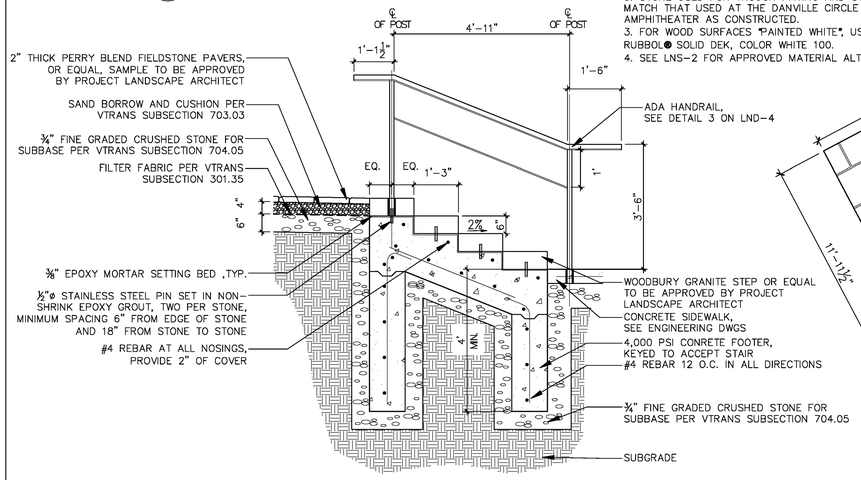

2 LND-4 STAIR AND TROUGH PAVING CROSS SECTION
SCALE: 1/2"=1'-0"

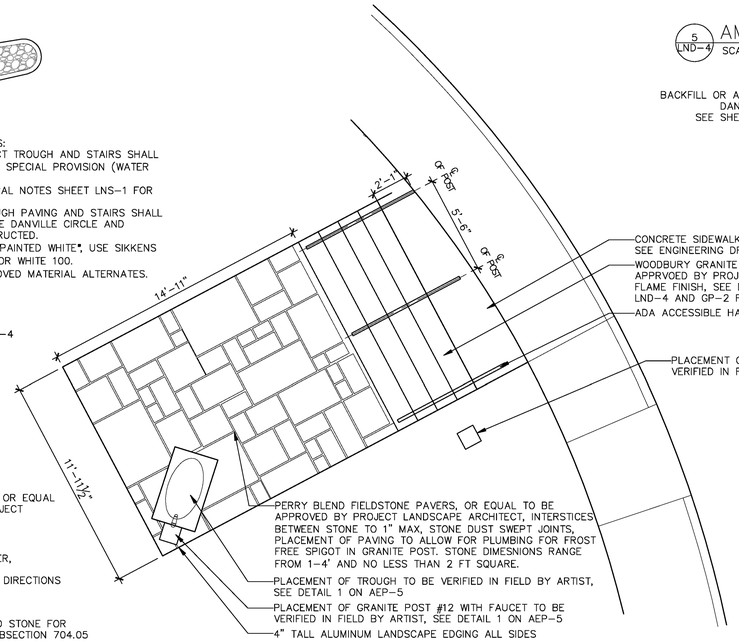

4 LND-4 TROUGH AND STAIR LAYOUT PLAN
SCALE ¼"=1'

GENERAL LANDSCAPING NOTES:
1. ALL LANDSCAPE INSTALLATION SHALL CONFORM TO VTRANS SPECIFICATIONS 651 TURF ESTABLISHMENT, 656 PLANTING TREES, SHRUBS, AND VINES, AND 755 LANDSCAPING MATERIALS.
2. ALL BACK-FILL TO BE 755.01 TO FULL WIDTH OF TREE PIT OR PLANTING BED. TAMP TO REMOVE AIR POCKETS AND WATER THOROUGHLY IMMEDIATELY AFTER PLANTING, TO RECEIVE A MINIMUM OF 10 GALLONS AT EACH WATERING, A MINIMUM OF TWICE WEEKLY DURING THE ESTABLISHMENT PERIOD.
3. SEE LANDSCAPE NOTES SHEET LNS-1 AND LNS-2 FOR PLANTING ALTERNATES.
4. ALL DIMENSIONS ARE IN FEET AND INCHES.

LandWorks
228 Maple St. suite 32
Middlebury,VT 05753
phone: 802.388.3011
fax: 802.388.1950
www.landworksvt.com

PROJECT NAME: DANVILLE
PROJECT NUMBER: F EGC 028-3(32)

FILE NAME: LND 4 | PLOT DATE: 1.19.2011
DESIGN SUPERVISOR: DR | DRAWN BY: RF
DESIGNED BY: LW | CHECKED BY: DR
LANDSCAPE DETAILS SHEET LND-4 | SHEET 198 OF 306

GENERAL LANDSCAPING NOTES:
1. ALL LANDSCAPE INSTALLATION SHALL CONFORM TO VTRANS SPECIFICATIONS 651 TURF ESTABLISHMENT, 656 PLANTING TREES, SHRUBS, AND VINES, AND 755 LANDSCAPING MATERIALS.
2. ALL TREE PITS TO BE BACK FILLED WITH PLANTING MIX OF HALF TOPSOIL, ONE QUARTER TOPSOIL MODIFIED (COMPOST), AND ONE QUARTER NATIVE MATERIAL AS APPROVED BY THE PROJECT LANDSCAPE ARCHITECT. TAMP TO REMOVE AIR POCKETS AND WATER THOROUGHLY IMMEDIATELY AFTER PLANTING, TO RECEIVE A MINIMUM OF 10 GALLONS AT EACH WATERING, A MINIMUM OF TWICE WEEKLY DURING THE ESTABLISHMENT PERIOD.
3. THE PIT SHALL BE THE DISTANCE FROM THE ROOT FLARE AT THE EXPOSED BASE OF THE TREE TRUNK TO THE BOTTOM OF THE ROOT BALL. THE PIT SHALL ONLY BE DEEP ENOUGH TO EXPOSE THE ROOT FLARE AT THE BASE OF THE TRUNK.
4. ALL BACK-FILL TO BE 755.01 TO FULL WIDTH OF TREE PIT OR PLANTING BED.
5. ALL TREES TO BE PROVIDED WITH SUBSECTION 755.16- TREE WATERING BAGS.
6. ALL DIMENSIONS ARE IN FEET AND INCHES UNLESS OTHERWISE NOTED.

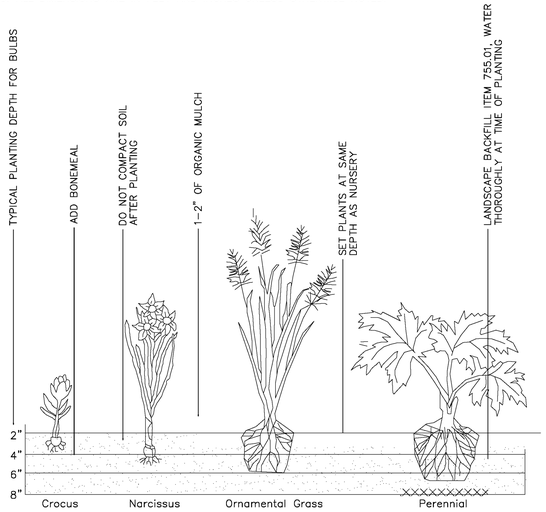

NOTES:
1. BULBS ARE TO BE PLANTED IN ACCORDANCE WITH GROWERS RECOMMENDATIONS FOR DEPTH.
2. WITH BARE ROOT PERENNIALS OR GRASSES CARE MUST BE TAKEN TO PLANT AT CORRECT DEPTH AND TO SPREAD ROOTS OUT INTO PLANTING MIX IN ACCORDANCE WITH THEIR NATURAL GROWTH HABIT. PROPER SOIL MOISTURE DURING AND AFTER PLANTING MUST BE MAINTAINED. CROWN LEVEL FOR PERENNIALS MUST BE AT GROUNDLINE.
3. PH RANGE FOR ALMOST ALL PERENNIAL PLANTINGS TO BE IN THE 5.5-7 RANGE, WITH THE EXCEPTIONS BEING HEATH AND HEATHERS AT 4.5-5. CONTRACTOR REQUIRED TO PROVIDE PROPER PLANTING MINIMUM.
4. WHEN SEEDING GRASSES OR PERENNIALS, PROPER MOISTURE AND MULCHING IS TO BE PROVIDED. SEEDING RATES AND SOIL PREPARATION WILL VARY WITH THE PLANT MATERIAL SELECTED, SO GROWER AND/ OR SUPPLIER RECOMMENDATIONS FOR PLANT TYPE MUST BE FOLLOWED.

1 LND-5 BULB, ORNAMENTAL GRASS, AND PERRENNIAL PLANTING DETAIL
SCALE: NTS

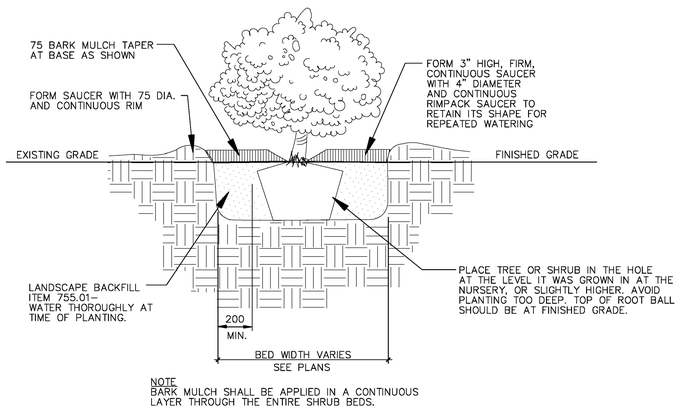

NOTE
BARK MULCH SHALL BE APPLIED IN A CONTINUOUS LAYER THROUGH THE ENTIRE SHRUB BEDS.

3 LND-5 TYPICAL SHRUB PLANTING DETAIL
SCALE: NOT TO SCALE

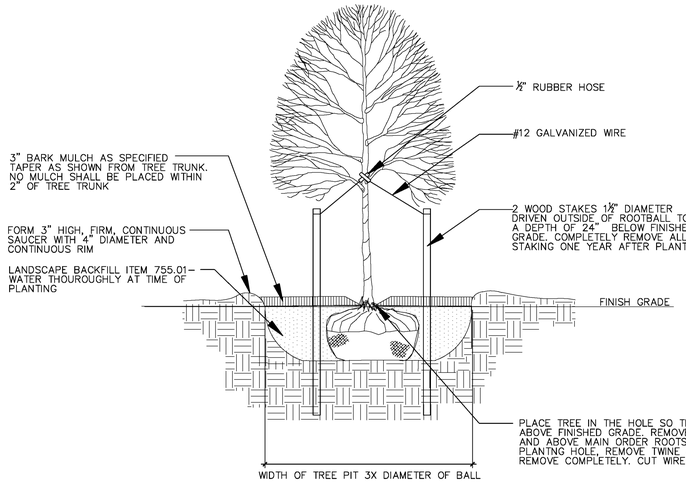

2 LND-5 TYPICAL TREE PLANTING DETAILS
SCALE: NOT TO SCALE

NOTES:
1. ANTI-DESSICANT SPRAY IS TO BE APPLIED TO ALL EVERGREENS PER MANUFACTURER SPECIFICATIONS.
2. COMPLETELY REMOVE ALL GUY-WIRES AND TURNBUCKEL ONE YEAR AFTER PLANTING.

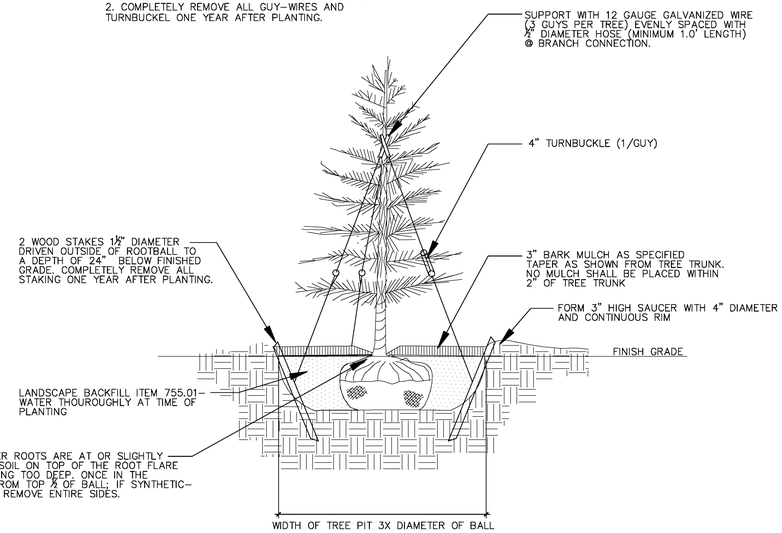

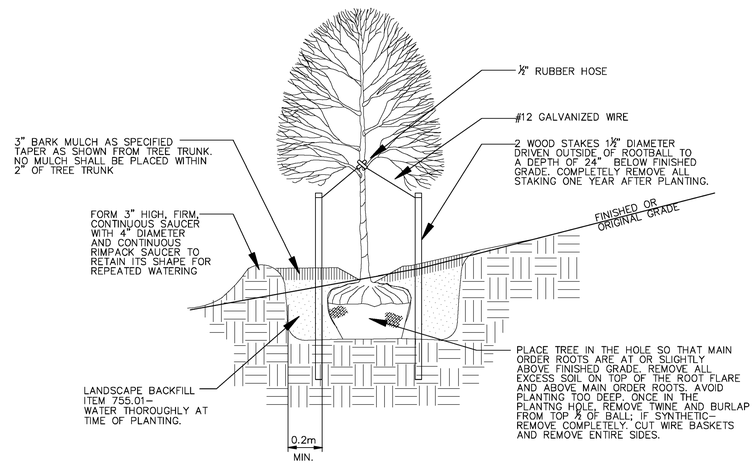

4 LND-5 TREE PLANTING ON SLOPE
SCALE: NOT TO SCALE

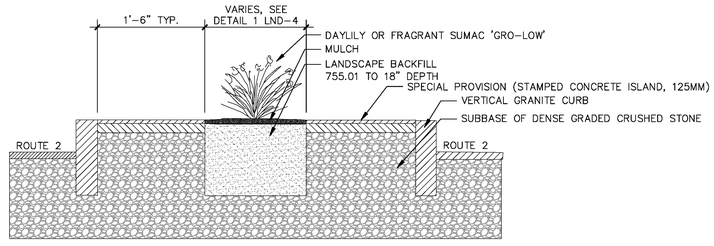

NOTE:
SEE ENGINEERING DRAWINGS FOR ROAD AND CURBING DETAILS.

5 LND-5 STAIR AND TROUGH PAVING CROSS SECTION
SCALE: NTS

LandWorks
228 Maple St. suite 32
Middlebury, VT 05753
phone: 802.388.3011
fax: 802.388.1950
www.landworksvt.com

PROJECT NAME: DANVILLE	
PROJECT NUMBER: F EGC 028-3(32)	
FILE NAME: LND 5	PLOT DATE: 1.19.2011
DESIGN SUPERVISOR: DR	DRAWN BY: RF
DESIGNED BY: LW	CHECKED BY: DR
LANDSCAPE DETAILS SHEET LND-5	SHEET 199 OF 306

NOTES:
1. FINAL EXACT LOCATIONS TO BE DETERMINED BY ARTIST. CONTRACTOR TO CONSULT ARTIST TO STAKE/FLAG ACTUAL PLACEMENT OF EACH GRANITE POST PRIOR TO INSTALLATION.
2. ARTIST TO BE CONSULTED ON ACTUAL DATE OF INSTALLATION TO VERIFY PLACEMENT IN FIELD.
3. TEMPLATE FOR PLACEMENT OF PIN AND/OR PLUMBING IN SONOTUBE TO BE PROVIDED BY ARTIST.
4. ARTIST TO PROVIDE GRANITE POST.
5. CONTRACTOR IS RESPONSIBLE FOR POURING CONCRETE SONOTUBE, SETTING PIN, EXCAVATION, SELECT MATERIAL INSTALLATION AND BACKFILL. CONTRACTOR SHALL INSTALL SONOTUBE AND POST PLUMB AND LEVEL.
6. BACK-FILL WITH REMOVED EARTH.
7. REPLACE 4" OF TOPSOIL AND REPLANT GRASS OVER ALL BACKFILL.
8. ALL WORK REQUIRED TO CONSTRUCT GRANITE POSTS SHALL BE PAID AS ITEM 900.620 SPECIAL PROVISION (GRANITE POST). SEE LANDSCAPE GENERAL NOTES SHEET LNS-1 FOR MORE INFORMATION.

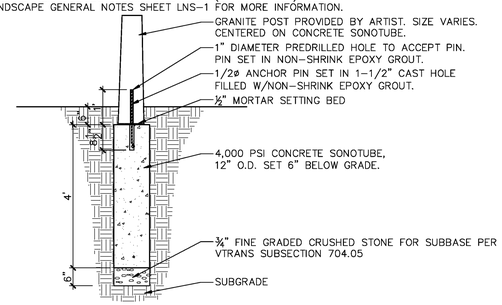

1 AEP-1 GRANITE POST ON 12"ø SONOTUBE, TYP.
SCALE: ½"=1'

NOTES:
1. FINAL EXACT LOCATIONS TO BE DETERMINED BY ARTIST. CONTRACTOR TO CONSULT ARTIST TO STAKE/FLAG ACTUAL PLACEMENT OF EACH GRANITE POST PRIOR TO INSTALLATION.
2. ARTIST TO BE CONSULTED ON ACTUAL DATE OF INSTALLATION TO VERIFY PLACEMENT IN FIELD.
3. TEMPLATE FOR PLACEMENT OF PIN AND/OR PLUMBING IN SONOTUBE TO BE PROVIDED BY ARTIST.
4. ARTIST TO PROVIDE GRANITE POST.
5. CONTRACTOR IS RESPONSIBLE FOR POURING CONCRETE SONOTUBE, SETTING PIN, EXCAVATION, SELECT MATERIAL INSTALLATION AND BACKFILL. CONTRACTOR SHALL INSTALL SONOTUBE AND POST PLUMB AND LEVEL.
6. BACK-FILL WITH REMOVED EARTH.
7. REPLACE 4" OF TOPSOIL AND REPLANT GRASS OVER ALL BACKFILL.
8. ALL WORK REQUIRED TO CONSTRUCT GRANITE POSTS SHALL BE PAID AS ITEM 900.620 SPECIAL PROVISION (GRANITE POST). SEE LANDSCAPE GENERAL NOTES SHEET LNS-1 FOR MORE INFORMATION.

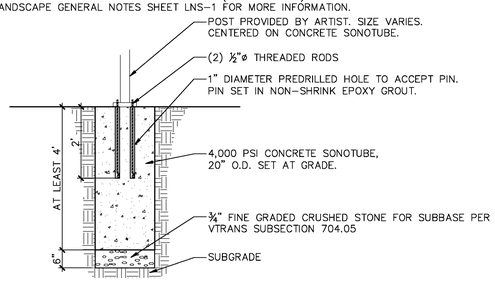

2 AEP-1 GRANITE POST ON 20"ø SONOTUBE, TYP.
SCALE: ½"=1'

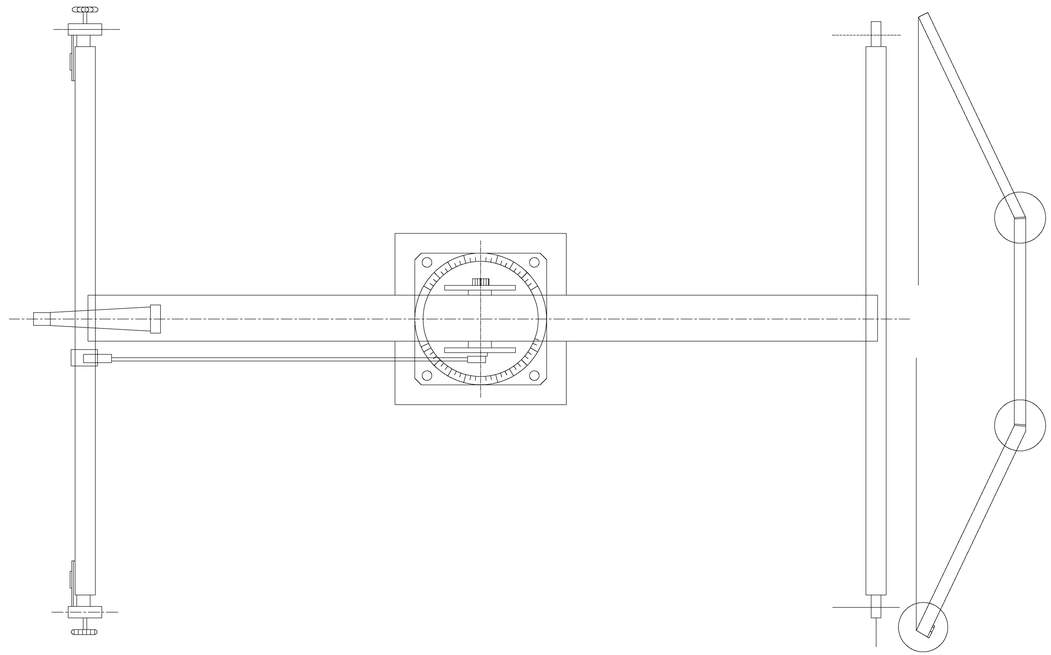

5 AEP-1 MAP OF THE MOUNTAINS/MAP MAKER: PLAN
SCALE: 1"=1'-0"

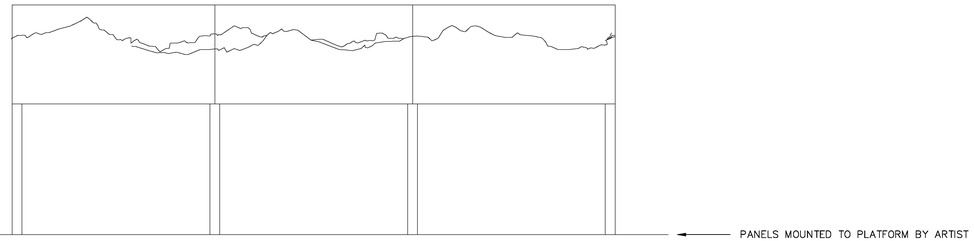

4 AEP-1 MAP OF THE MOUNTAINS: ELEVATION
SCALE: 1"=1'-0"

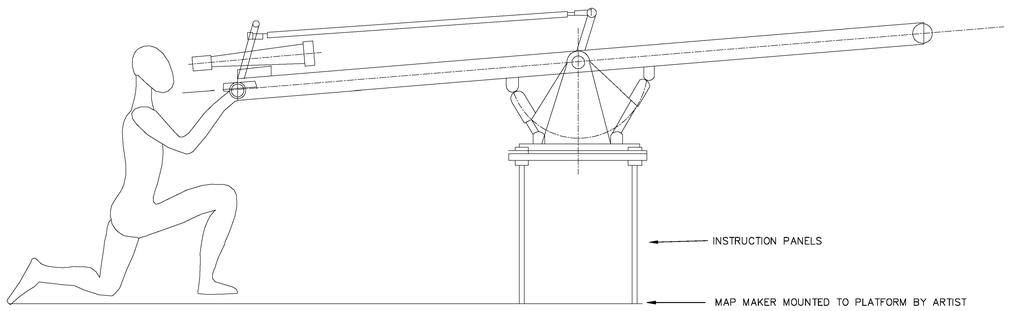

5 AEP-1 MAP MAKER: ELEVATION
SCALE: 1"=1'-0"

EXCLUSIVE DESIGN OF CARL BIELENBERG 4.24.2008

GENERAL ARTISTIC ENHANCEMENT NOTE:
ALL FINAL DESIGNS, LAYOUT AND CONSTRUCTION OF ALL ARTISTIC ENHANCEMENTS PLANS (AEP) ARE THE RESPONSIBILITY OF THE ARTIST AND/OR OVERSEEN BY THE ARTIST.

MAP OF THE MOUNTAINS NOTES:
1.ALL WORK TO CONSTRUCT MAP OF MOUNTAINS SHALL BE PAID AS ITEM 900.645 SPECIAL PROVISION (MAPMAKER).
2. SEE LANDSCAPE GENERAL NOTES SHEET 172 FOR MORE INFORMATION.

NOTE:
ALL DIMENSIONS ARE IN FEET AND INCHES.

Inventor:
Carl Bielenberg
1915 East Hill Road
Marshfield, Vermont
05658
802 456 6998

Artist:
Andrea Wasserman
993 Darling Hill Road
Vershire, Vermont
05079
802 685 3208
asw@together.net

PROJECT NAME: DANVILLE
PROJECT NUMBER: F EGC 028-3(32)

FILE NAME: AEP 1
DESIGN SUPERVISOR: WASSERMAN
DESIGNED BY: WASSERMAN
ARTISTIC ENHANCEMENT PLAN AEP-1

PLOT DATE: 1.19.2011
DRAWN BY: LANDWORKS
CHECKED BY: LANDWORKS
SHEET 200 OF 306

NOTES:
1. ARTIST TO PROVIDE ARTISTIC ENHANCEMENTS. ARTIST RESPONSIBLE FOR INSTALLATION OF ARTITIC ENHANCEMENTS , RAILING, AND LOCATION. CONTRACTOR TO BUILD RAMP AND DECK AND INSTALL SONOTUBE FOUNDATIONS.
2. LOCATION OF MAPMAKER AND PLATFORM TO BE DETERMINED IN FIELD BY ARTIST. LENGTH OF RAMP IS DEPENDENT ON GRADE AT CHOSEN SITE. HEIGHT OF PLATFORM ABOVE GRADE AT BASE OF RAMP NOT TO EXCEED 12".
3. CONTRACTOR TO CONSULT ARTIST TO STAKE/FLAG ACTUAL PLACEMENT OF SONOTUBES PRIOR TO INSTALLATION.
4. ARTIST TO BE CONSULTED ON ACTUAL DATE OF INSTALLATION TO VERIFY PLACEMENT IN FIELD.
5. TEMPLATE FOR PLACEMENT OF THREADED RODS IN SONOTUBE TO BE PROVIDED BY ARTIST.
6. ALL STINGERS TO BE ATTACHED USING GALVANIZED STEEL BRACKETS OR HOT-DIPPED GALVANIZED STRUCTURAL JOIST HANGER NAILS.
7. ALL WOOD SURFACES TO BE SEALED PRIOR TO INSTALLATION. ALL EXPOSED WOOD SURFACES TO BE SEALED.
8. FOR WOOD SURFACES "PAINTED GRAY", USE SIKKENS CETOL® SRD SEMI-TRANSPARENT STAIN, COLOR FOG GRAY. SEE LANDSCAPE GENERAL NOTES SHEET LNS-2 FOR APPROVED ALTERNATES.
9. CONTRACTOR SHALL INSTALL SONOTUBES AND THREADED RODS PLUMB AND LEVEL.
10. BACK-FILL WITH REMOVED EARTH.
11. REPLACE 4" OF TOP SOIL AND REPLANT GRASS.

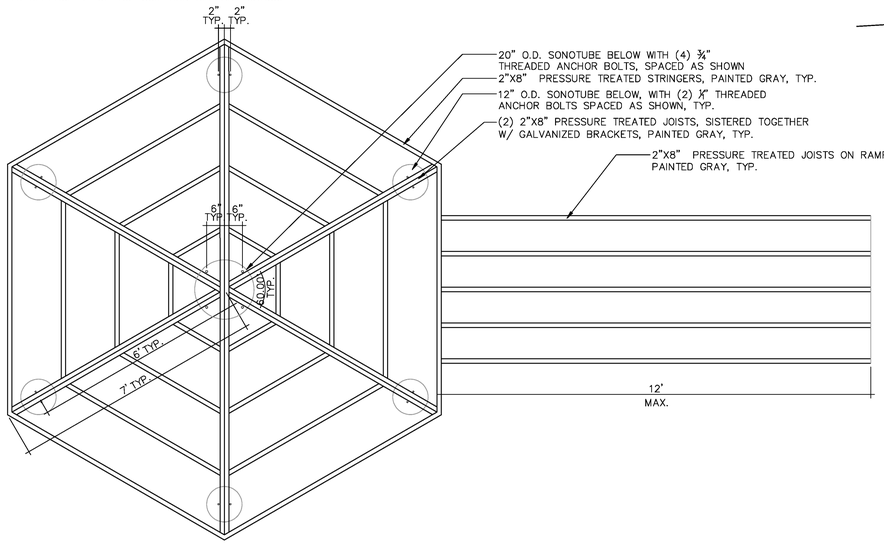

1 AEP-2 MAPMAKER PLATFORM JOIST PLAN
SCALE: ½"=1'

NOTES:
1. CONTRACTOR TO USE ¼" STAINLESS STEEL OR HOT DIPPED GALVANIZED DECKING NAILS OR SCREWS THROUGHOUT.
2. DECKING LAID PERPENDICULAR TO JOISTS.

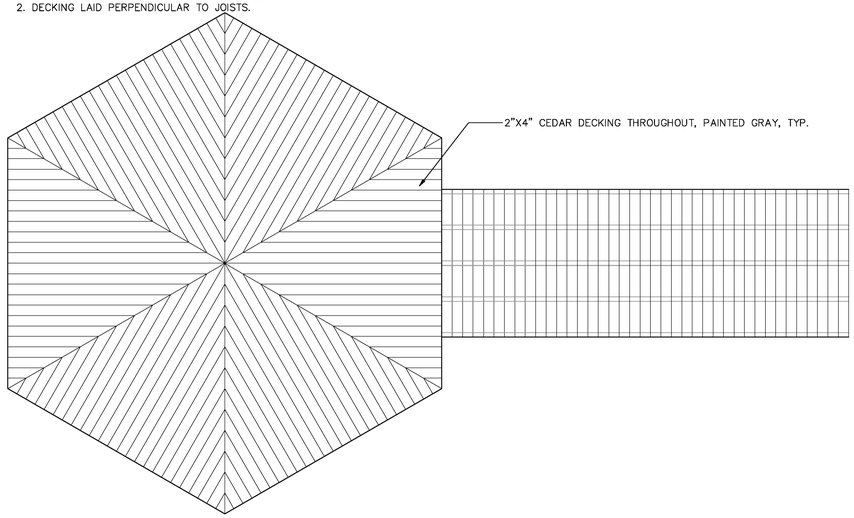

2 AEP-2 MAPMAKER PLATFORM DECKING PLAN
SCALE: ½"=1'

NOTES:
1. FFE AT TOP OF RAMP TO BE MAX 1' ABOVE GRADE WHERE BOTTOM ON RAMP MEETS EXISTING GRADE.
2. RAMP SHALL MET THE REQUIREMENTS OF SECTION 1010 OF THE INTERNATIONAL BUILDING CODE.

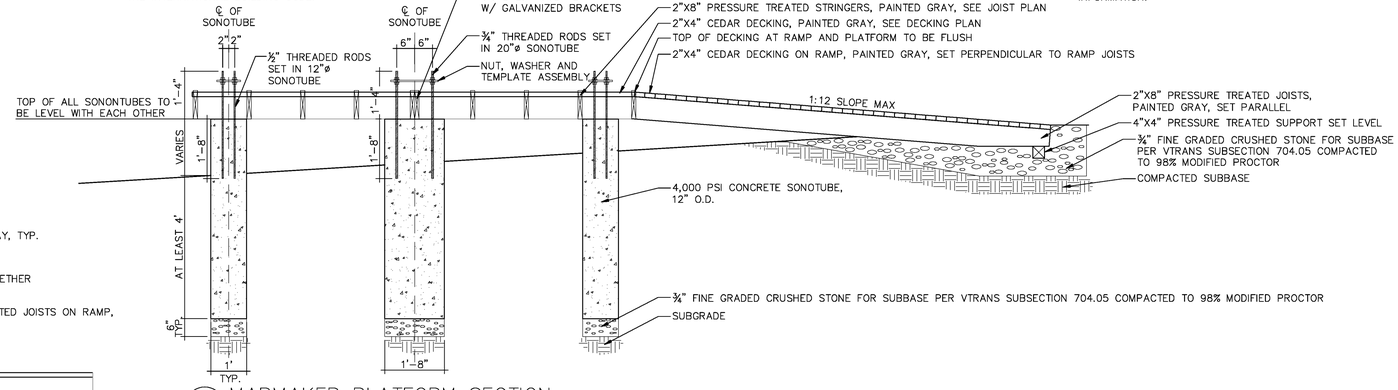

3 AEP-2 MAPMAKER PLATFORM SECTION
SCALE: ½"=1'

MAP OF THE MOUNTAINS NOTES:
1. ALL WORK TO CONSTRUCT MAP OF MOUNTAINS SHALL BE PAID AS ITEM 900.645 SPECIAL PROVISION (MAPMAKER).
2. SEE LANDSCAPE GENERAL NOTES SHEET LNS-1 FOR MORE INFORMATION.

GENERAL LANDSCAPING NOTES:
1. ALL LANDSCAPE INSTALLATION SHALL CONFORM TO VTRANS SPECIFICATIONS 651 TURF ESTABLISHMENT, 656 PLANTING TREES, SHRUBS, AND VINES, AND 755 LANDSCAPING MATERIALS.
2. ALL BACK-FILL TO BE PER SUBSECTION 755.01 TO FULL WIDTH OF TREE PIT OR PLANTING BED. TAMP TO REMOVE AIR POCKETS AND WATER THOROUGHLY IMMEDIATELY AFTERN PLANTING. TO RECIEVE A MINIMUM OF 10 GALLONS AT EACH WATERING, A MINIMUM OF TWICE WEEKLY DURING ESTABLISHMENT PERIOD.

PLANTING SCHEDULE

KEY	BOTANICAL NAME	COMMON NAME	QTY.	SIZE	COMMENTS
CA	Clethra alnifolia	Hummingbird Summersweet	17	2 gallon	place as shown, spaced 3' o.c.

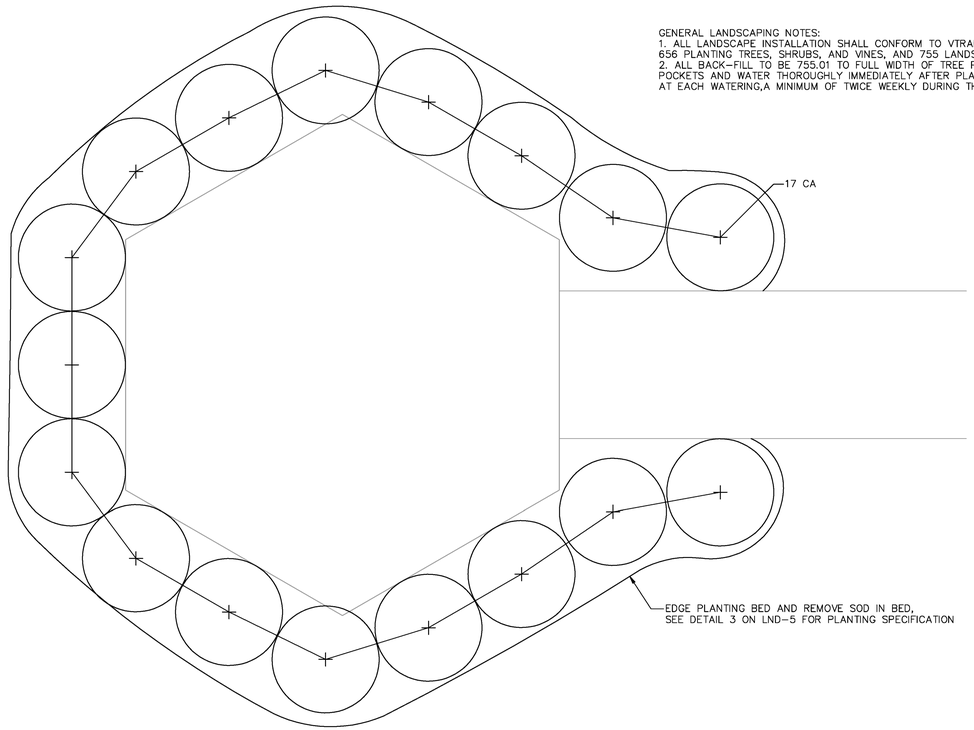

4 AEP-2 MAPMAKER PLATFORM PLANTING PLAN
SCALE: ½"=1'

GENERAL LANDSCAPING NOTES:
1. ALL LANDSCAPE INSTALLATION SHALL CONFORM TO VTRANS SPECIFICATIONS 651 TURF ESTABLISHMENT, 656 PLANTING TREES, SHRUBS, AND VINES, AND 755 LANDSCAPING MATERIALS.
2. ALL BACK-FILL TO BE 755.01 TO FULL WIDTH OF TREE PIT OR PLANTING BED.TAMP TO REMOVE AIR POCKETS AND WATER THOROUGHLY IMMEDIATELY AFTER PLANTING, TO RECEIVE A MINIMUM OF 10 GALLONS AT EACH WATERING,A MINIMUM OF TWICE WEEKLY DURING THE ESTABLISHMENT PERIOD.

Inventor:
Carl Bielenberg
1915 East Hill Road
Marshfield, Vermont
05658
802 456 6998

Artist:
Andrea Wasserman
993 Darling Hill Road
Vershire, Vermont
05079
802 685 3208
asw@together.net

PROJECT NAME: DANVILLE
PROJECT NUMBER: F EGC 028-3(32)

FILE NAME: AEP 2
DESIGN SUPERVISOR: WASSERMAN
DESIGNED BY: WASSERMAN
ARTISTIC ENHANCEMENT PLAN AEP-2
PLOT DATE: 1.19.2011
DRAWN BY: LANDWORKS
CHECKED BY: LANDWORKS
SHEET 201 OF 306

NOTES:
1. FINAL EXACT LOCATIONS TO BE DETERMINED BY ARTIST. CONTRACTOR TO CONSULT ARTIST TO STAKE/FLAG ACTUAL PLACEMENT OF EACH GRANITE POST PRIOR TO INSTALLATION.
2. ARTIST TO BE CONSULTED ON ACTUAL DATE OF INSTALLATION TO VERIFY PLACEMENT IN FIELD.
3. TEMPLATE FOR PLACEMENT OF PIN AND/OR PLUMBING IN SONOTUBE TO BE PROVIDED BY ARTIST.
4. ARTIST TO PROVIDE GRANITE POST.
5. CONTRACTOR IS RESPONSIBLE FOR POURING CONCRETE SONOTUBE, SETTING PIN, EXCAVATION, SELECT MATERIAL INSTALLATION AND BACKFILL. CONTRACTOR SHALL INSTALL SONOTUBE AND POST PLUMB AND LEVEL.
6. BACK-FILL WITH REMOVED EARTH.
7. REPLACE 4" OF TOPSOIL AND REPLANT GRASS OVER ALL BACKFILL.
8. ALL WORK REQUIRED TO CONSTRUCT GRANITE POSTS SHALL BE PAID AS ITEM 900.620 SPECIAL PROVISION (GRANITE POST). SEE LANDSCAPE GENERAL NOTES SHEET LNS-1 FOR MORE INFORMATION.

NOTES FOR GRANITE POSTS NUMBERING:
-GRANITE POST #1 DELETED- REPLACED BY MAPMAKER, SEE AEP-1
-GRANITE POST #2 ON AEP-5
-GRANITE POST #3 DELETED, REPLACED BY WEATHERVANE ON AEP-5
-GRANITE POST #10 DELETED
-GRANITE POST #16 DELETED

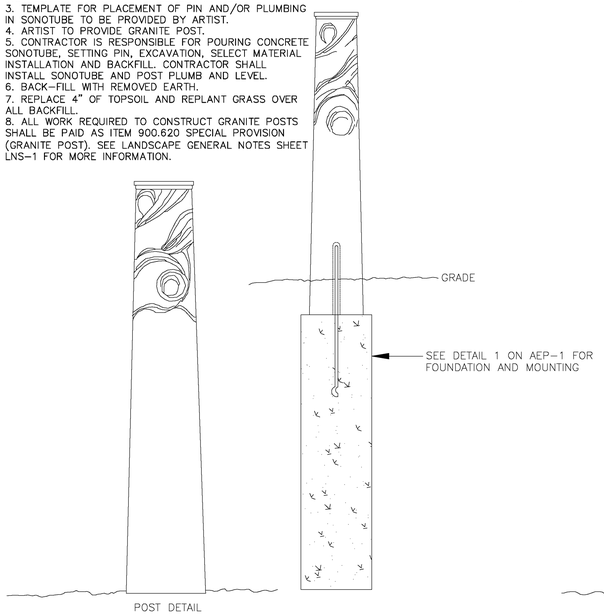

1 AEP-3 GRANITE POST #6: COMMON WIND PATTERNS
SCALE: NTS

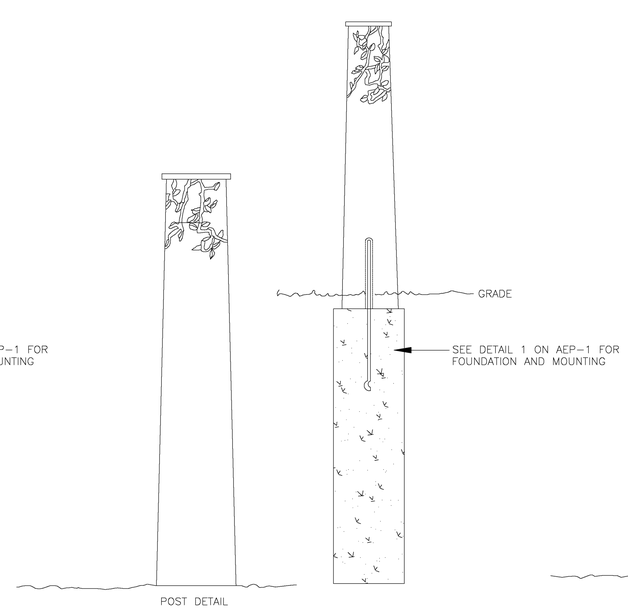

2 AEP-3 GRANITE POST #7: SEASONAL PATTERNS- SPRING
SCALE: NTS

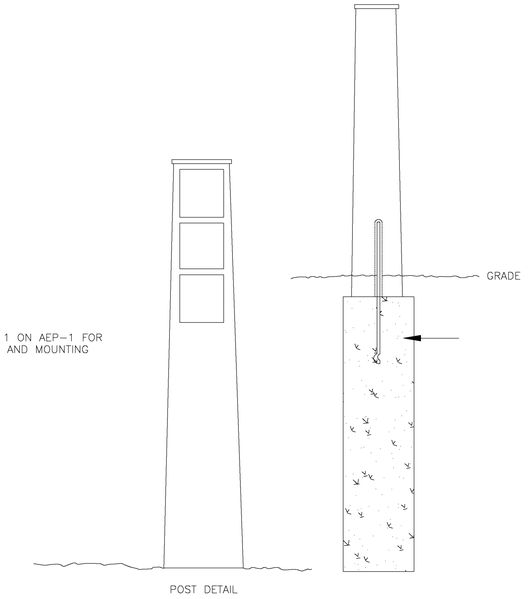

3 AEP-3 GRANITE POST #8: SEASONAL PATTERNS- FALL
SCALE: NTS

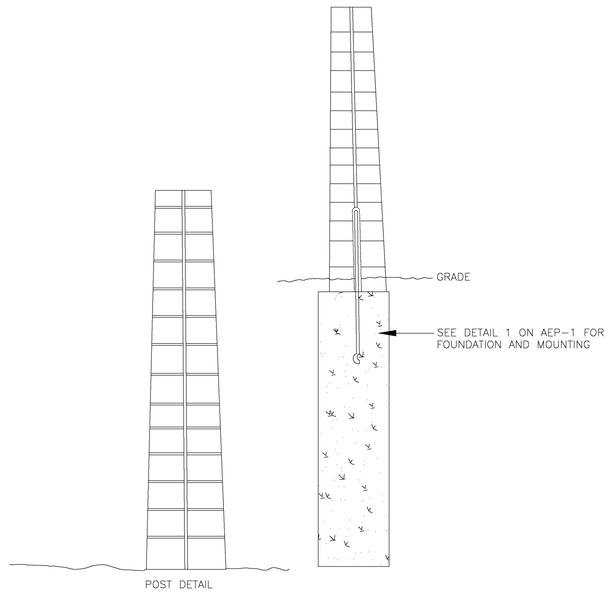

4 AEP-3 GRANITE POST #9: THERMOMETER
SCALE: NTS

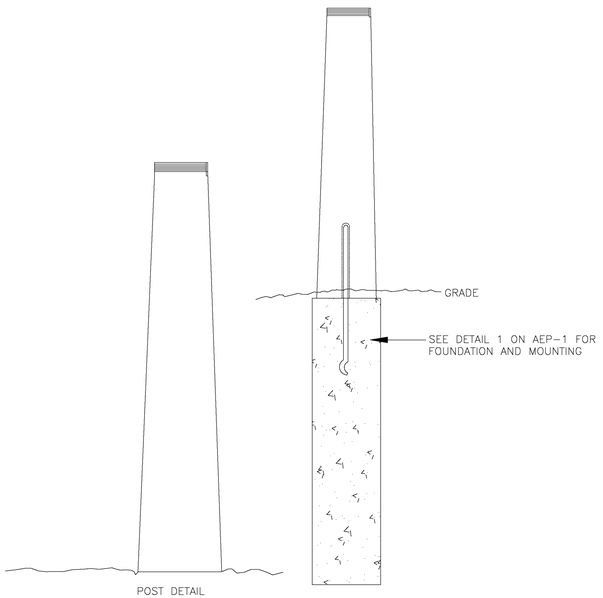

5 AEP-3 GRANITE POST #11: PHOTO OF HISTORIC DANVILLE
SCALE: NTS

NOTES FOR PLUMBING:
1. DRINKING FOUNTAIN PLUMBING MUST BE APPROVED BY VTRANS AND PREPARATION FOR FROST FREE MANHOLE PROVIDED PRIOR TO POST INSTALLATION.
2. ALL PLUMBING FROM FIXTURE TO BASE OF POST TO BE PROVIDED BY ARTIST.

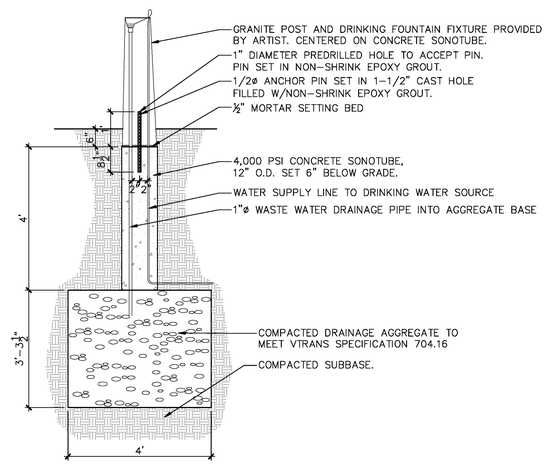

6 AEP-3 GRANITE POST #4 & # 13: DRINKING FOUNTAIN
SCALE: NTS

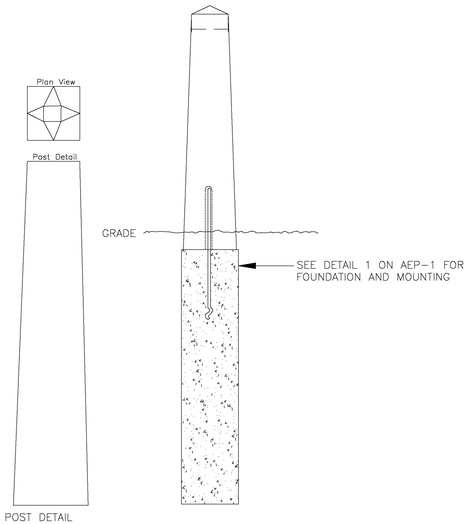

7 AEP-3 GRANITE POST #5: DANVILLE SCHOOL
SCALE: NTS

Inventor:
Carl Bielenberg
1915 East Hill Road
Marshfield, Vermont
05658
802 456 6998

Artist:
Andrea Wasserman
993 Darling Hill Road
Vershire, Vermont
05079
802 685 3208
asw@together.net

PROJECT NAME: DANVILLE
PROJECT NUMBER: F EGC 028-3(32)

FILE NAME: AEP 3
DESIGN SUPERVISOR: WASSERMAN
DESIGNED BY: WASSERMAN
ARTISTIC ENHANCEMENT PLAN AEP-3

PLOT DATE: 1.19.2011
DRAWN BY: LANDWORKS
CHECKED BY: LANDWORKS
SHEET 202 OF 306

NOTES:
1. FINAL EXACT LOCATIONS TO BE DETERMINED BY ARTIST. CONTRACTOR TO CONSULT ARTIST TO STAKE/FLAG ACTUAL PLACEMENT OF EACH GRANITE POST PRIOR TO INSTALLATION.
2. ARTIST TO BE CONSULTED ON ACTUAL DATE OF INSTALLATION TO VERIFY PLACEMENT IN FIELD.
3. TEMPLATE FOR PLACEMENT OF PIN AND/OR PLUMBING IN SONOTUBE TO BE PROVIDED BY ARTIST.
4. ARTIST TO PROVIDE GRANITE POST.
5. CONTRACTOR IS RESPONSIBLE FOR POURING CONCRETE SONOTUBE, SETTING PIN, EXCAVATION, SELECT MATERIAL INSTALLATION AND BACKFILL. CONTRACTOR SHALL INSTALL SONOTUBE AND POST PLUMB AND LEVEL.
6. BACK-FILL WITH REMOVED EARTH.
7. REPLACE 4" OF TOPSOIL AND REPLANT GRASS OVER ALL BACKFILL.
8. ALL WORK REQUIRED TO CONSTRUCT GRANITE POSTS SHALL BE PAID AS ITEM 900.620 SPECIAL PROVISION (GRANITE POST). SEE LANDSCAPE GENERAL NOTES SHEET LNS-1 FOR MORE INFORMATION.

NOTES FOR GRANITE POSTS NUMBERING:
-GRANITE POST #1 DELETED- REPLACED BY MAPMAKER, SEE AEP-1
-GRANITE POST #2 ON AEP-5
-GRANITE POST #3 DELETED, REPLACED BY WEATHERVANE ON AEP-5
-GRANITE POST #10 DELETED
-GRANITE POST #16 DELETED

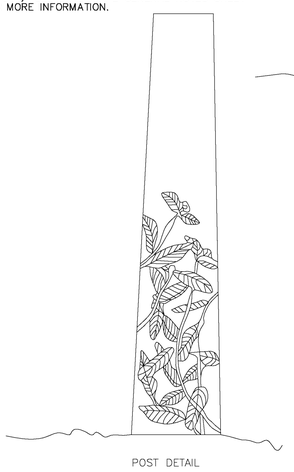

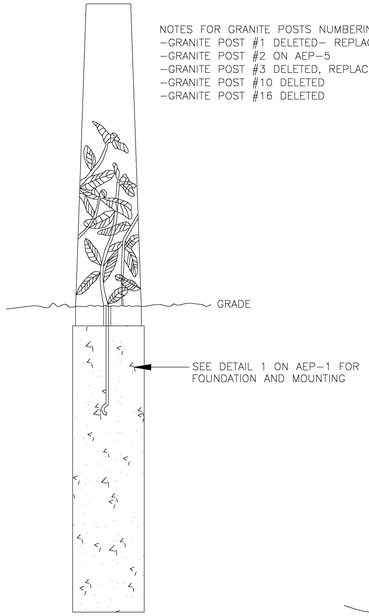



2 AEP-4 GRANITE POST #15: SEASONAL PATTERNS- WINTER
SCALE: NTS

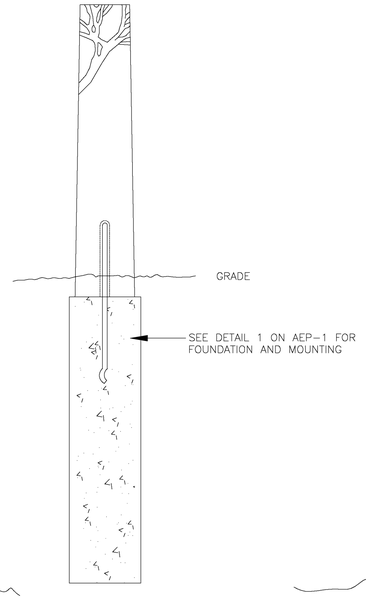

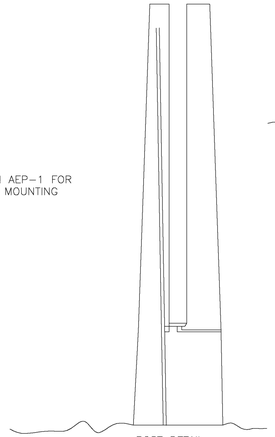

3 AEP-4 GRANITE POST #17: RAIN GAUGE
SCALE: NTS

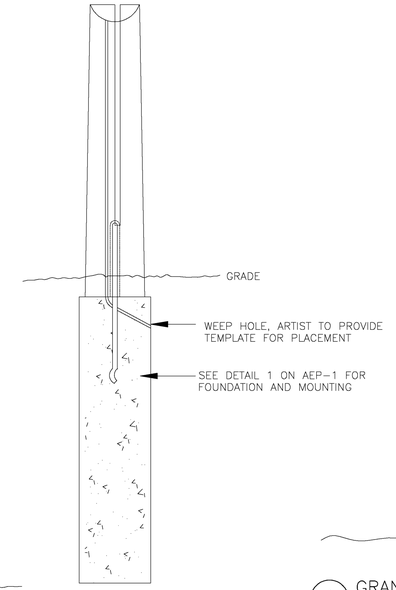

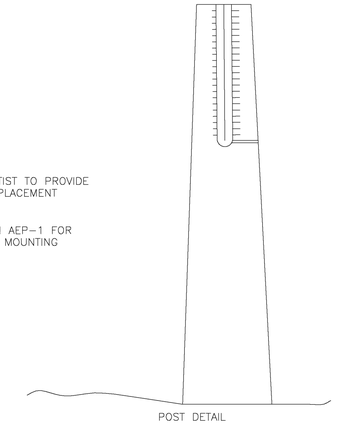

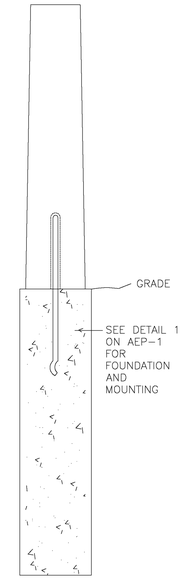

4 AEP-4 GRANITE POST #18: DOWSING
SCALE: NTS

1 AEP-4 GRANITE POST #14: SEASONAL PATTERNS- SUMMER
SCALE: NTS

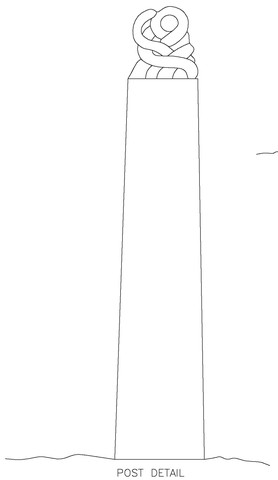

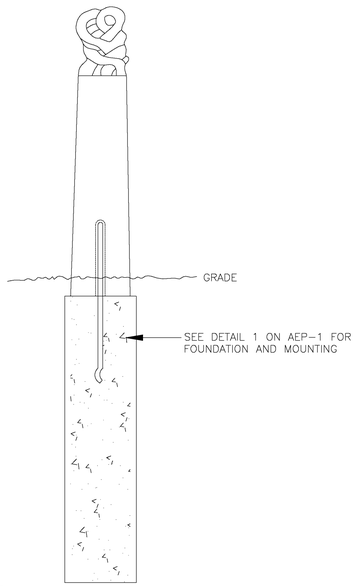

5 AEP-4 GRANITE POST #19: COMMUNITY
SCALE: NTS

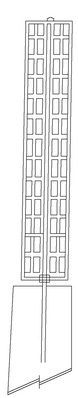

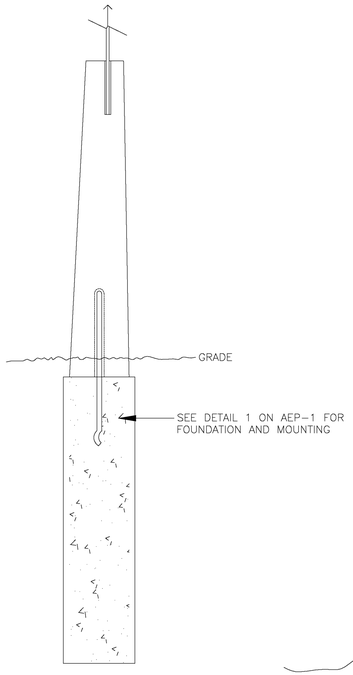

6 AEP-4 GRANITE POST #20: WIND ELEMENT
SCALE: NTS

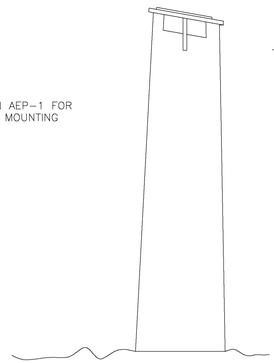

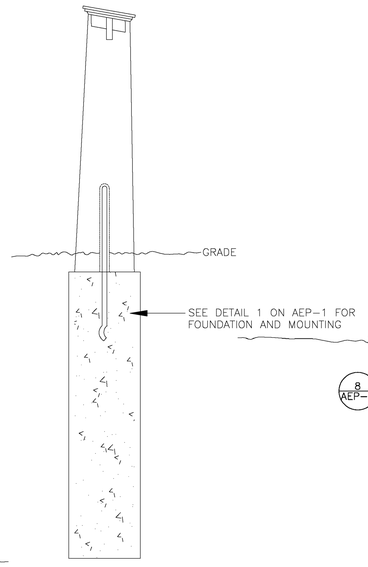

7 AEP-4 GRANITE POST #21: DIRECTIONAL WITH COMPASS
SCALE: NTS

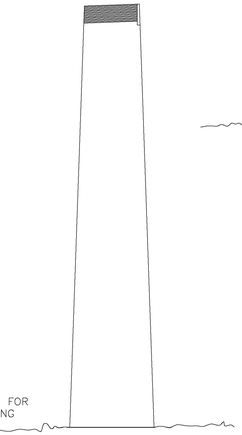

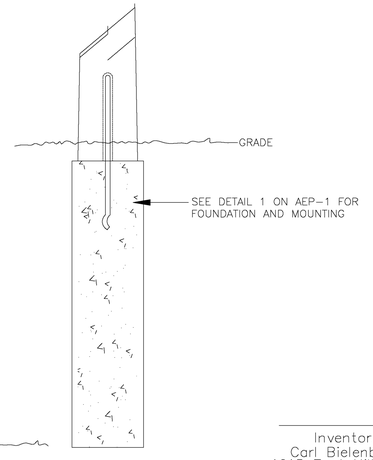

8 AEP-4 GRANITE POST #22: AGRARIAN
SCALE: NTS

Inventor:
Carl Bielenberg
1915 East Hill Road
Marshfield, Vermont
05658
802 456 6998

Artist:
Andrea Wasserman
993 Darling Hill Road
Vershire, Vermont
05079
802 685 3208
asw@together.net

PROJECT NAME:	DANVILLE
PROJECT NUMBER:	F EGC 028-3(32)
FILE NAME: AEP 4	PLOT DATE: 1.19.2011
DESIGN SUPERVISOR: WASSERMAN	DRAWN BY: LANDWORKS
DESIGNED BY: WASSERMAN	CHECKED BY: LANDWORKS
ARTISTIC ENHANCEMENT PLAN AEP-4	SHEET 203 OF 306

NOTES:
1. FINAL EXACT LOCATIONS TO BE DETERMINED BY ARTIST. CONTRACTOR TO CONSULT ARTIST TO STAKE/FLAG ACTUAL PLACEMENT OF EACH GRANITE POST PRIOR TO INSTALLATION.
2. ARTIST TO BE CONSULTED ON ACTUAL DATE OF INSTALLATION TO VERIFY PLACEMENT IN FIELD.
3. TEMPLATE FOR PLACEMENT OF PIN AND/OR PLUMBING IN SONOTUBE TO BE PROVIDED BY ARTIST.
4. ARTIST TO PROVIDE GRANITE POST.
5. CONTRACTOR IS RESPONSIBLE FOR POURING CONCRETE SONOTUBE, SETTING PIN, EXCAVATION, SELECT MATERIAL INSTALLATION AND BACKFILL. CONTRACTOR SHALL INSTALL SONOTUBE AND POST PLUMB AND LEVEL.
6. BACK-FILL WITH REMOVED EARTH.
7. REPLACE 4" OF TOPSOIL AND REPLANT GRASS OVER ALL BACKFILL.
8. ALL WORK REQUIRED TO CONSTRUCT GRANITE POSTS SHALL BE PAID AS ITEM 900.620 SPECIAL PROVISION (GRANITE POST). SEE LANDSCAPE GENERAL NOTES SHEET LNS-1 FOR MORE INFORMATION.

NOTES FOR PLUMBING:
1. DRINKING FOUNTAIN PLUMBING MUST BE APPROVED BY VTRANS AND PREPARATION FOR FROST FREE MANHOLE PROVIDED PRIOR TO POST INSTALLATION.
2. ALL PLUMBING FROM FIXTURE TO BASE OF POST TO BE PROVIDED BY ARTIST.

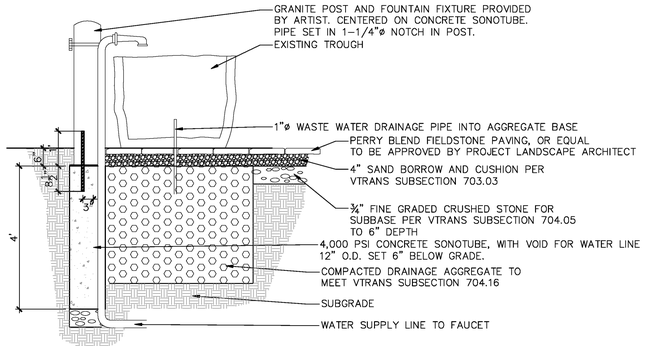

1 AEP-5 GRANITE POST #12: WATER TROUGH AND SPIGOT
SCALE: NTS

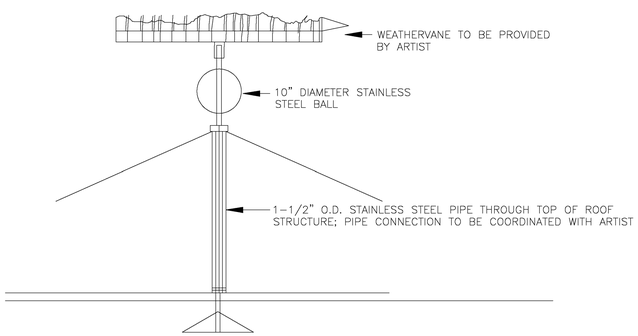

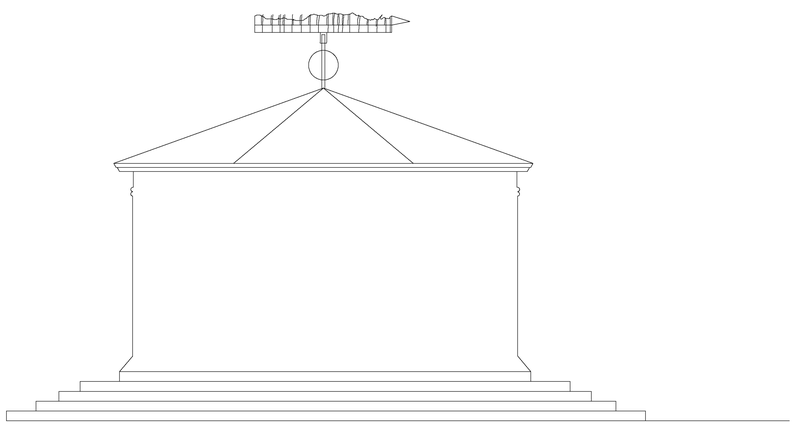

WEATHERVANE AND DIRECTIONAL NOTES:
1.ALL WORK TO CONSTRUCT WEATHERVNE AND DIRECTIONAL SHALL BE PAID SUBSIDIARY TO ITEM 900.645 SPECIAL PROVISION (RECONSTRUCT BANDSTAND).
2. SEE LANDSCAPE GENERAL NOTES SHEET 172 FOR MORE INFORMATION.
3. SEE SHEET BSP-2 FOR LIGHTING AND ELECTRICAL.

2 AEP-5 WEATHERVANE AND DIRECTIONAL ON BANDSTAND
SCALE: NTS

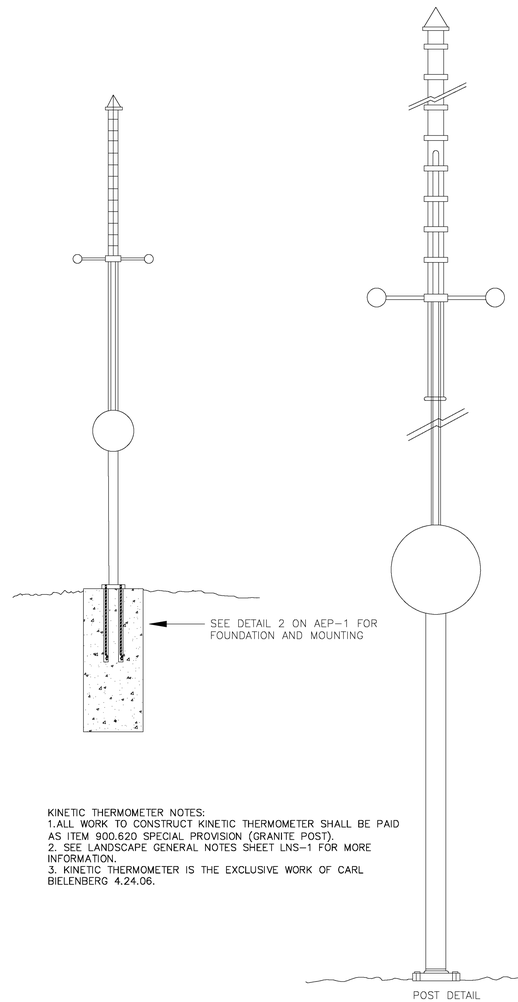

POST DETAIL

KINETIC THERMOMETER NOTES:
1.ALL WORK TO CONSTRUCT KINETIC THERMOMETER SHALL BE PAID AS ITEM 900.620 SPECIAL PROVISION (GRANITE POST).
2. SEE LANDSCAPE GENERAL NOTES SHEET LNS-1 FOR MORE INFORMATION.
3. KINETIC THERMOMETER IS THE EXCLUSIVE WORK OF CARL BIELENBERG 4.24.06.

3 AEP-5 POST #2: KINETIC THERMOMETER
SCALE: NTS

Inventor:
Carl Bielenberg
1915 East Hill Road
Marshfield, Vermont
05658
802 456 6998

Artist:
Andrea Wasserman
993 Darling Hill Road
Vershire, Vermont
05079
802 685 3208
asw@together.net

PROJECT NAME: DANVILLE	
PROJECT NUMBER: F EGC 028-3(32)	
FILE NAME: AEP 5	PLOT DATE: 1.19.2011
DESIGN SUPERVISOR: WASSERMAN	DRAWN BY: LANDWORKS
DESIGNED BY: WASSERMAN	CHECKED BY: LANDWORKS
ARTISTIC ENHANCEMENT PLAN AEP-5	SHEET 204 OF 306

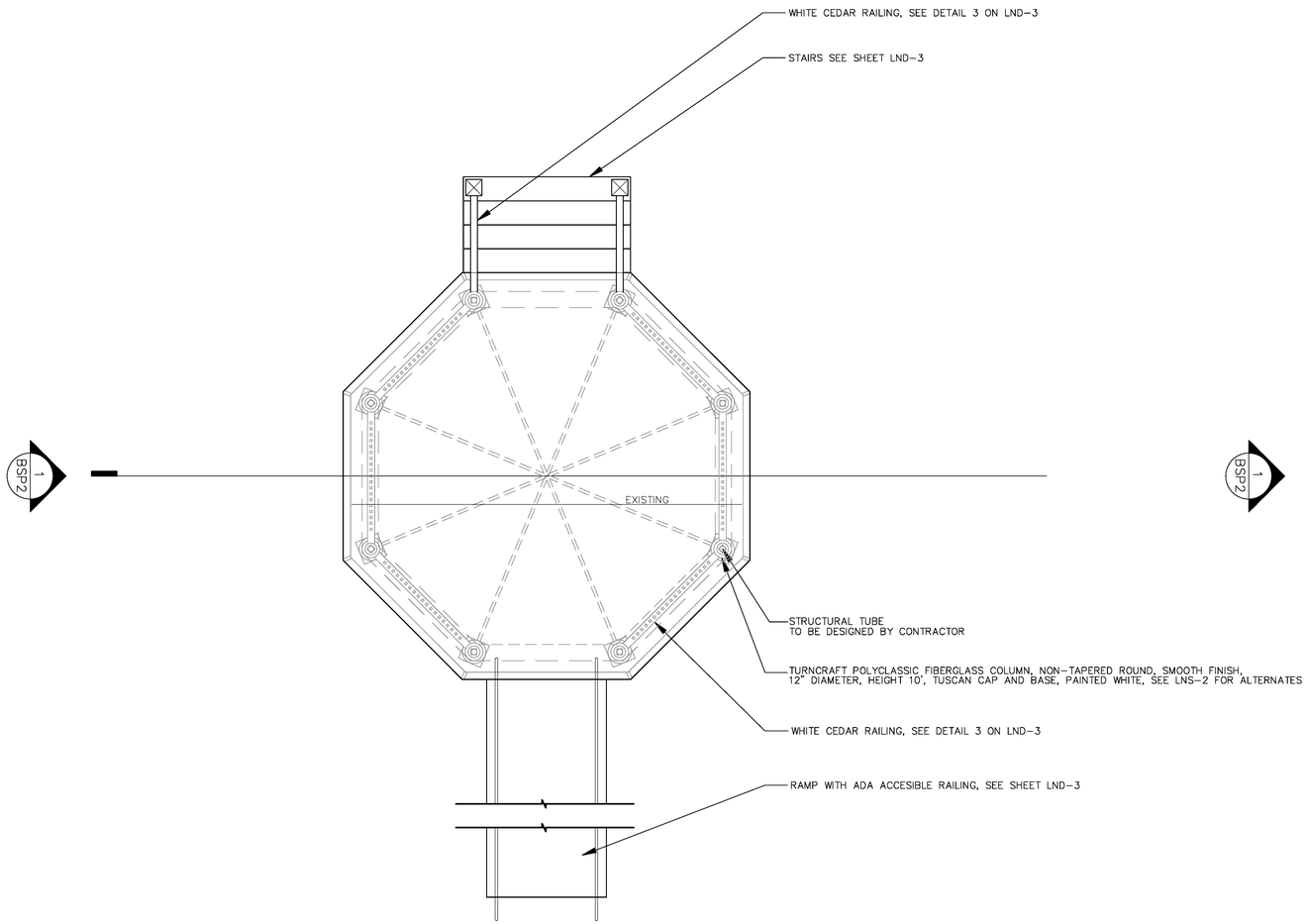

1 BSP-1 FLOOR PLAN
SCALE: 1/4"=1'-0"

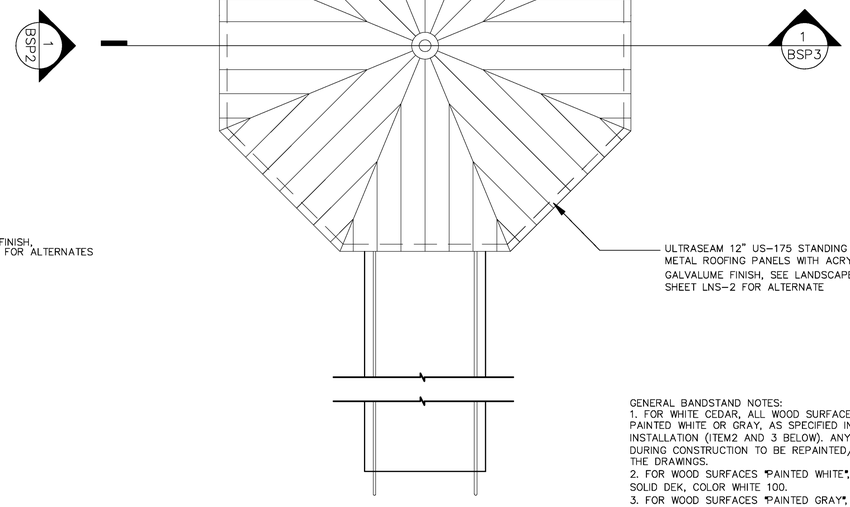

2 BSP-1 ROOF PLAN
SCALE: 1/4"=1'-0"

GENERAL BANDSTAND NOTES:
1. FOR WHITE CEDAR, ALL WOOD SURFACES TO BE SEALED AND PAINTED WHITE OR GRAY, AS SPECIFIED IN THE DRAWINGS, PRIOR TO INSTALLATION (ITEM2 AND 3 BELOW). ANY WOOD SURFACES EXPOSED DURING CONSTRUCTION TO BE REPAINTED/RESEALED AS SPECIFIED IN THE DRAWINGS.
2. FOR WOOD SURFACES "PAINTED WHITE", USE SIKKENS RUBBOL® SOLID DEK, COLOR WHITE 100.
3. FOR WOOD SURFACES "PAINTED GRAY", USE SIKKENS CETOL® SRD SEMI-TRANSPARENT STAIN, COLOR FOG GRAY.
4. SEE LANDSCAPE GENERAL NOTES SHEET LNS-2 FOR APPROVED MATERIAL ALTERNATES.
5. ALL WORK ON THIS SHEET SHALL BE PAID UNDER ITEM 900.645 SPECIAL PROVISION (RECONSTRUCT BANDSTAND).
6. COLLAR TIES, ROOF/CEILING FRAMING AND STRUCTURAL DESIGN TO BE DESIGNED BY THE CONTRACTOR. REFER TO SPECIAL PROVISIONS.
7. ORIGINAL DESIGN BY TRUEX CULLINGS & PARTNERS ARCHITECTS.

TRUEXCULLINGS &
PARTNERS ARCHITECTS
802 658 2775

FLOOR PLAN & ROOF PLAN

PROJECT NAME: DANVILLE
PROJECT NUMBER: F EGC 028-3(32)

FILE NAME: BSP 1
DESIGN SUPERVISOR: DR
DESIGNED BY: LANDWORKS
BAND STAND PLAN BSP-1

PLOT DATE: 1.19.2011
DRAWN BY: LANDWORKS
CHECKED BY: DR
SHEET 205 OF 306

GENERAL BANDSTAND NOTES:
1. FOR WHITE CEDAR, ALL WOOD SURFACES TO BE SEALED AND PAINTED WHITE OR GRAY, AS SPECIFIED IN THE DRAWINGS, PRIOR TO INSTALLATION (ITEM2 AND 3 BELOW). ANY WOOD SURFACES EXPOSED DURING CONSTRUCTION TO BE REPAINTED/RESEALED AS SPECIFIED IN THE DRAWINGS.
2. FOR WOOD SURFACES "PAINTED WHITE", USE SIKKENS RUBBOL® SOLID DEK, COLOR WHITE 100.
3. FOR WOOD SURFACES "PAINTED GRAY", USE SIKKENS CETOL® SRD SEMI-TRANSPARENT STAIN, COLOR FOG GRAY.
4. SEE LANDSCAPE GENERAL NOTES SHEET LNS-2 FOR APPROVED MATERIAL ALTERNATES.
5. ALL WORK ON THIS SHEET SHALL BE PAID UNDER ITEM 900.645 SPECIAL PROVISION (RECONSTRUCT BANDSTAND).
6. COLLAR TIES, ROOF/CEILING FRAMING AND STRUCTURAL DESIGN TO BE DESIGNED BY THE CONTRACTOR. REFER TO SPECIAL PROVISIONS.
7. ORIGINAL DESIGN BY TRUEX CULLINGS & PARTNERS ARCHITECTS.

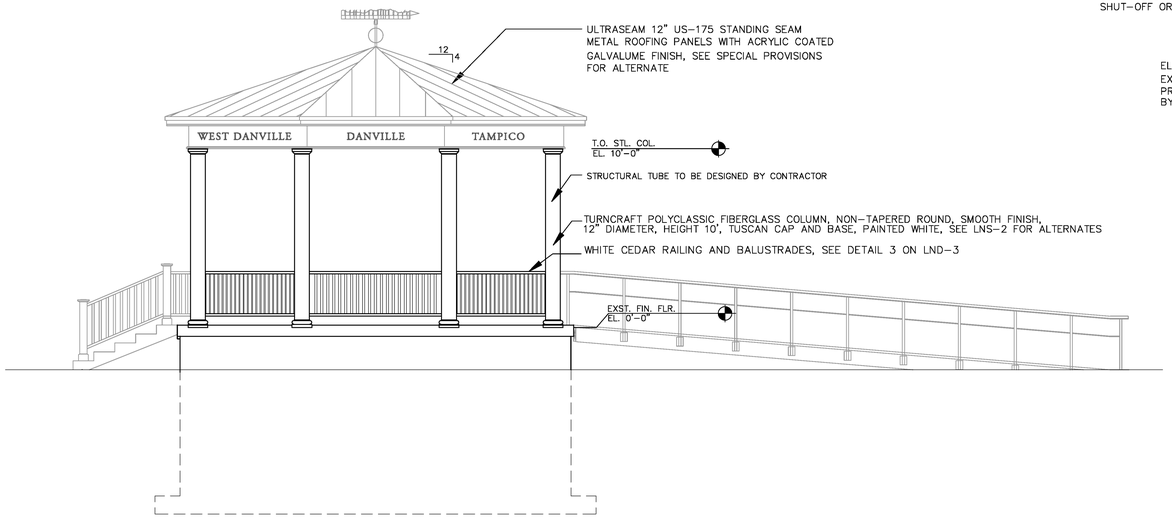

1 BSP-2 EAST ELEVATION
SCALE: 1/4"=1'-0"

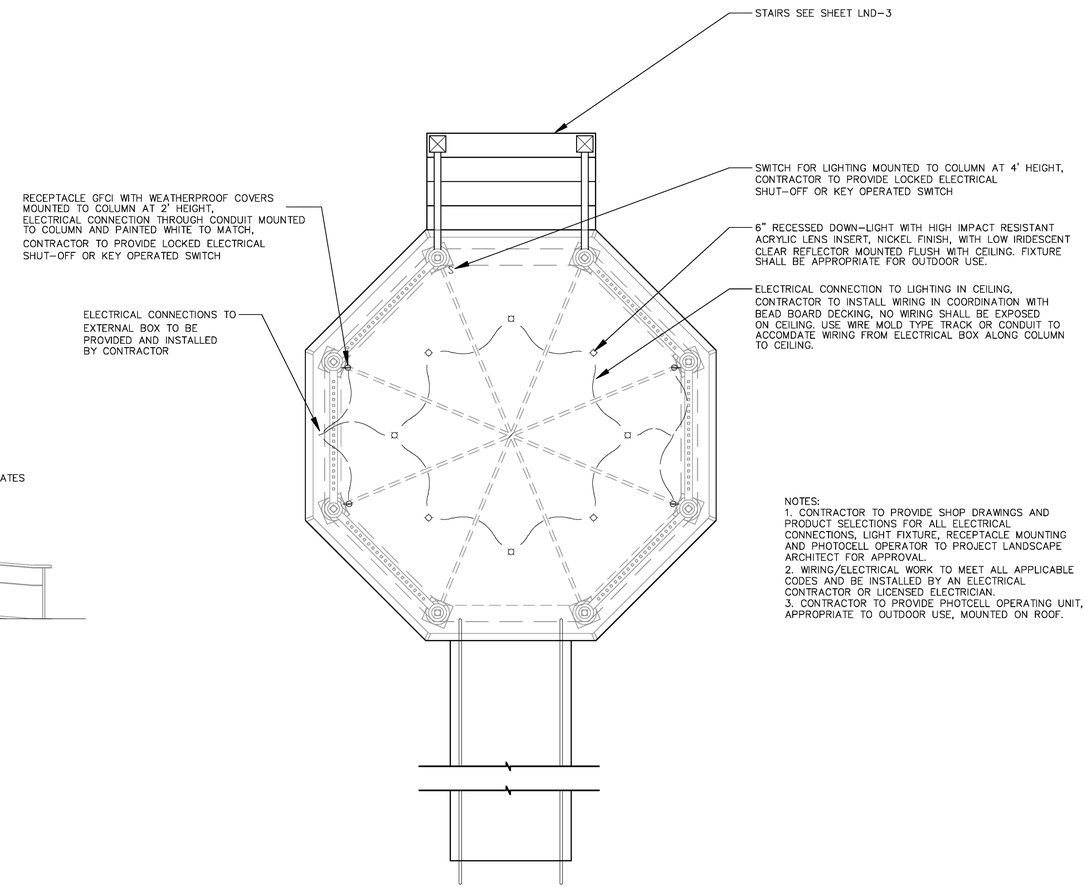

NOTES:
1. CONTRACTOR TO PROVIDE SHOP DRAWINGS AND PRODUCT SELECTIONS FOR ALL ELECTRICAL CONNECTIONS, LIGHT FIXTURE, RECEPTACLE MOUNTING AND PHOTOCELL OPERATOR TO PROJECT LANDSCAPE ARCHITECT FOR APPROVAL.
2. WIRING/ELECTRICAL WORK TO MEET ALL APPLICABLE CODES AND BE INSTALLED BY AN ELECTRICAL CONTRACTOR OR LICENSED ELECTRICIAN.
3. CONTRACTOR TO PROVIDE PHOTCELL OPERATING UNIT, APPROPRIATE TO OUTDOOR USE, MOUNTED ON ROOF.

1 BSP-2 ELECTRICAL/ LIGHTING PLAN
SCALE: 1/4"=1'-0"

TRUEXCULLINGS & PARTNERS ARCHITECTS
802 658 2775

ELEVATIONS

PROJECT NAME: DANVILLE
PROJECT NUMBER: F EGC 028-3(32)

FILE NAME: BSP 2
DESIGN SUPERVISOR: DR
DESIGNED BY: LANDWORKS
BAND STAND PLAN BSP-2

PLOT DATE: 1.19.2011
DRAWN BY: LANDWORKS
CHECKED BY: DR
SHEET 206 OF 306

GENERAL BANDSTAND NOTES:
1. FOR WHITE CEDAR, ALL WOOD SURFACES TO BE SEALED AND PAINTED WHITE OR GRAY, AS SPECIFIED IN THE DRAWINGS, PRIOR TO INSTALLATION (ITEM2 AND 3 BELOW). ANY WOOD SURFACES EXPOSED DURING CONSTRUCTION TO BE REPAINTED/RESEALED AS SPECIFIED IN THE DRAWINGS.
2. FOR WOOD SURFACES "PAINTED WHITE", USE SIKKENS RUBBOL® SOLID DEK, COLOR WHITE 100.
3. FOR WOOD SURFACES "PAINTED GRAY", USE SIKKENS CETOL® SRD SEMI-TRANSPARENT STAIN, COLOR FOG GRAY.
4. SEE LANDSCAPE GENERAL NOTES SHEET LNS-2 FOR APPROVED MATERIAL ALTERNATES.
5. ALL WORK ON THIS SHEET SHALL BE PAID UNDER ITEM 900.645 SPECIAL PROVISION (RECONSTRUCT BANDSTAND).
6. COLLAR TIES, ROOF/CEILING FRAMING AND STRUCTURAL DESIGN TO BE DESIGNED BY THE CONTRACTOR. REFER TO SPECIAL PROVISIONS.
7. ORIGINAL DESIGN BY TRUEX CULLINGS & PARTNERS ARCHITECTS.

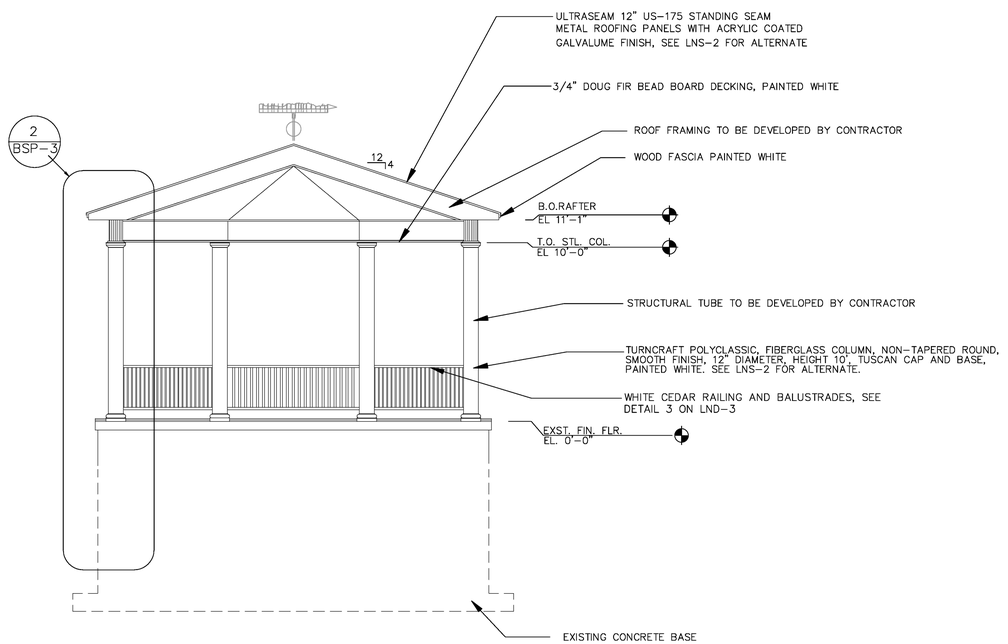

1 BSP-3 BUILDING SECTION
SCALE: 1/4"=1'-0"

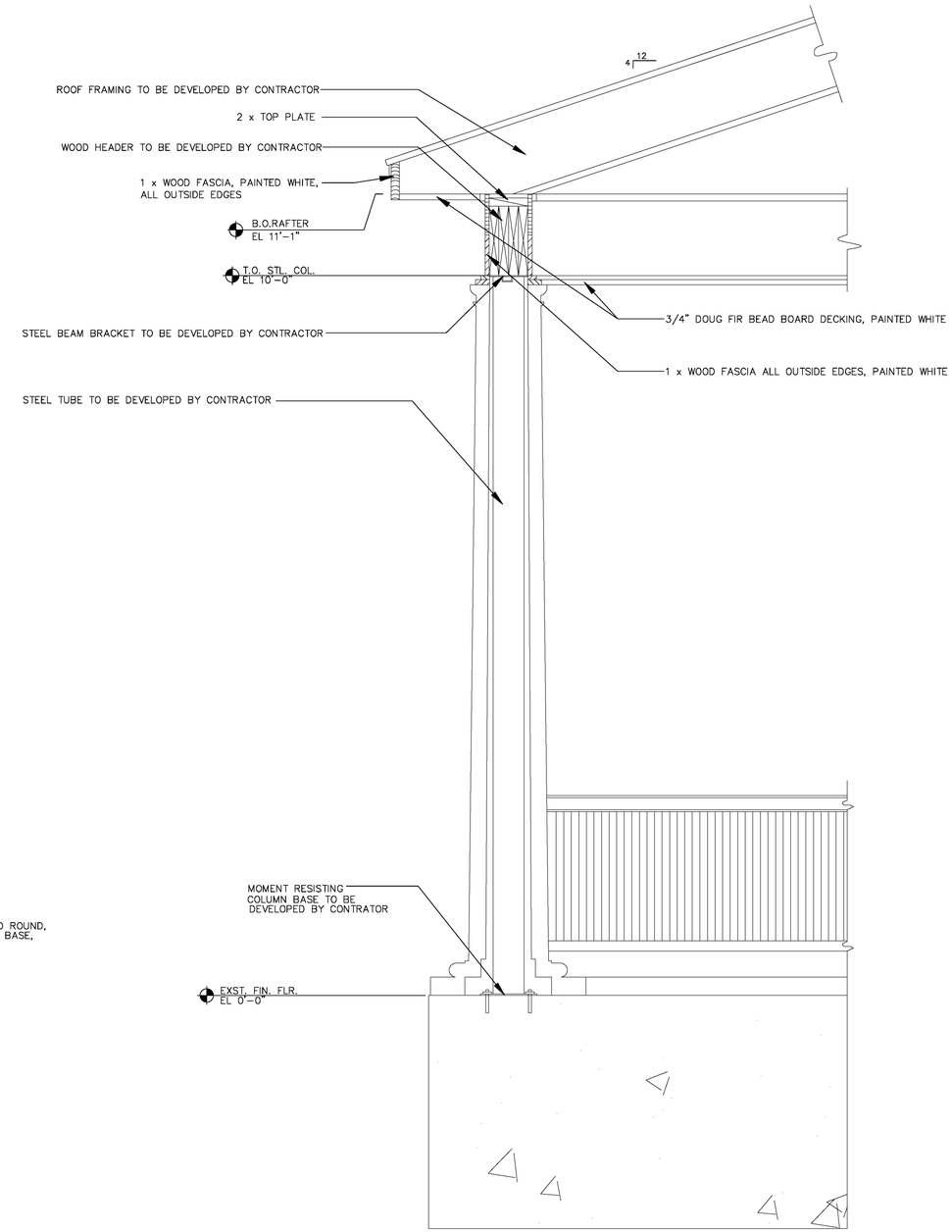

2 BSP-3 BUILDING SECTION
SCALE: 1"=1'-0"

TRUEXCULLINGS & PARTNERS ARCHITECTS
802 658 2775

BUILDING SECTION AND WALL SECTION

PROJECT NAME: DANVILLE
PROJECT NUMBER: F EGC 028-3(32)

FILE NAME: BSP 3
DESIGN SUPERVISOR: DR
DESIGNED BY: LANDWORKS
BAND STAND PLAN BSP-3

PLOT DATE: 1.19.2011
DRAWN BY: LANDWORKS
CHECKED BY: DR
SHEET 207 OF 306

VAOT Metric

MATCH LINE – STA. 3+055 SEE SHEET UP-3

MATCH LINE – STA. 19+260 SEE SHEET UP-3

SEE SHEET UP-3 MATCH LINE – STA. 19+070

LEGEND
- CHARTER CONDUIT
- CVPS CONDUIT (TRANSMISSION)
- CVPS CONDUIT (SERVICE)
- FAIRPOINT CONDUIT
- SOVERNET CONDUIT
- TYPICAL DUCT BANK (SEE DETAILS)
- BURIED CABLE PEDESTAL (FAIRPOINT)
- BURIED CABLE PEDESTAL (CHARTER)
- CVPS 1 PHASE TRANSFORMER
- CVPS 3 PHASE TERMINATING CABINET
- SOVERNET HANDHOLE
- 3.7M L x 1.8M W x 2.1M D 'J' TYPE VAULT (FAIRPOINT)
- 3.7M L x 1.8M W x 2.1M D 'J' TYPE VAULT (CHARTER)
- EXISTING UTILITY POLE
- PROPOSED UTILITY POLE
- DUCT BANK TYPICAL SECTION #, WITH DIRECTION ARROW (SEE NOTE 3)

NOTES:
1. SEE UP-5 FOR ALL UTILITY RELOCATION NOTES.
2. SEE UP-4A FOR PAY ITEM AND CONDUIT SCHEDULE.
3. SEE DUCT BANK TYPICAL SECTION DB-01 AND DB-02 FOR DUCT BANK TYPICAL SECTIONS. SEE TYPICAL DUCT BANK PROFILES ON DTP-01 THROUGH DTP-04.
4. SEE UTILITY POLE RISER DETAILS RD-01 FOR LOCATION OF RISERS ON EACH UTILITY POLE.

N

VT STATE PLANE GRID

PLACE FAIRPOINT PEDESTAL OVER EXISTING CABLE GOING INTO BANK

EXISTING FAIRPOINT DUCT BANKS

EXISTING FAIRPOINT VAULT

EXISTING FAIRPOINT DUCT BANKS

42 SMITH STREET

SEE SHEET UP-2

SEE SHEET UP-2

SEE SHEET UP-2

DUCT CONSTRUCTION NOTES:
1. ALL ELECTRICAL DUCTS UNDER PAVEMENT, PUBLIC SIDEWALKS AND WITHIN THE DANVILLE GREEN SHALL BE ENCASED IN CONCRETE. DUCTS MAY BE DIRECT BURIED IN ALL OTHER LOCATIONS, AS DETERMINED BY THE ENGINEER.
2. ALL COMMUNICATION DUCTS SHALL BE ENCASED IN CONCRETE. THE ONLY EXCEPTION TO THIS SHALL BE WHEN RESIDENTIAL OR COMMERCIAL SERVICE DUCTS ARE NOT LOCATED UNDER DRIVEWAYS, ROADWAYS AND PUBLIC SIDEWALKS.

DATUM

VERTICAL NAVD88

HORIZONTAL NAD83(92)

REPLACEMENT SHEETS ISSUED 02/24/2012

0 10 20

SCALE 1:250

Stantec

PROJECT NAME: DANVILLE

PROJECT NUMBER: F EGC 028-3(32)

FILE NAME: ...\095 ut01.ptf | PLOT DATE: 2/24/2012

DESIGN SUPERVISOR: GARY SANTY | DRAWN BY: STANTEC

DESIGNED BY: STANTEC | CHECKED BY: STANTEC

UTILITY PLAN UP-1 | SHEET 208 OF 306

2/24/202 3:46:47 PM V:\1953\active\195300033.0182\Construction\Field Changes\underground utility revisions\095 ut01.ptf

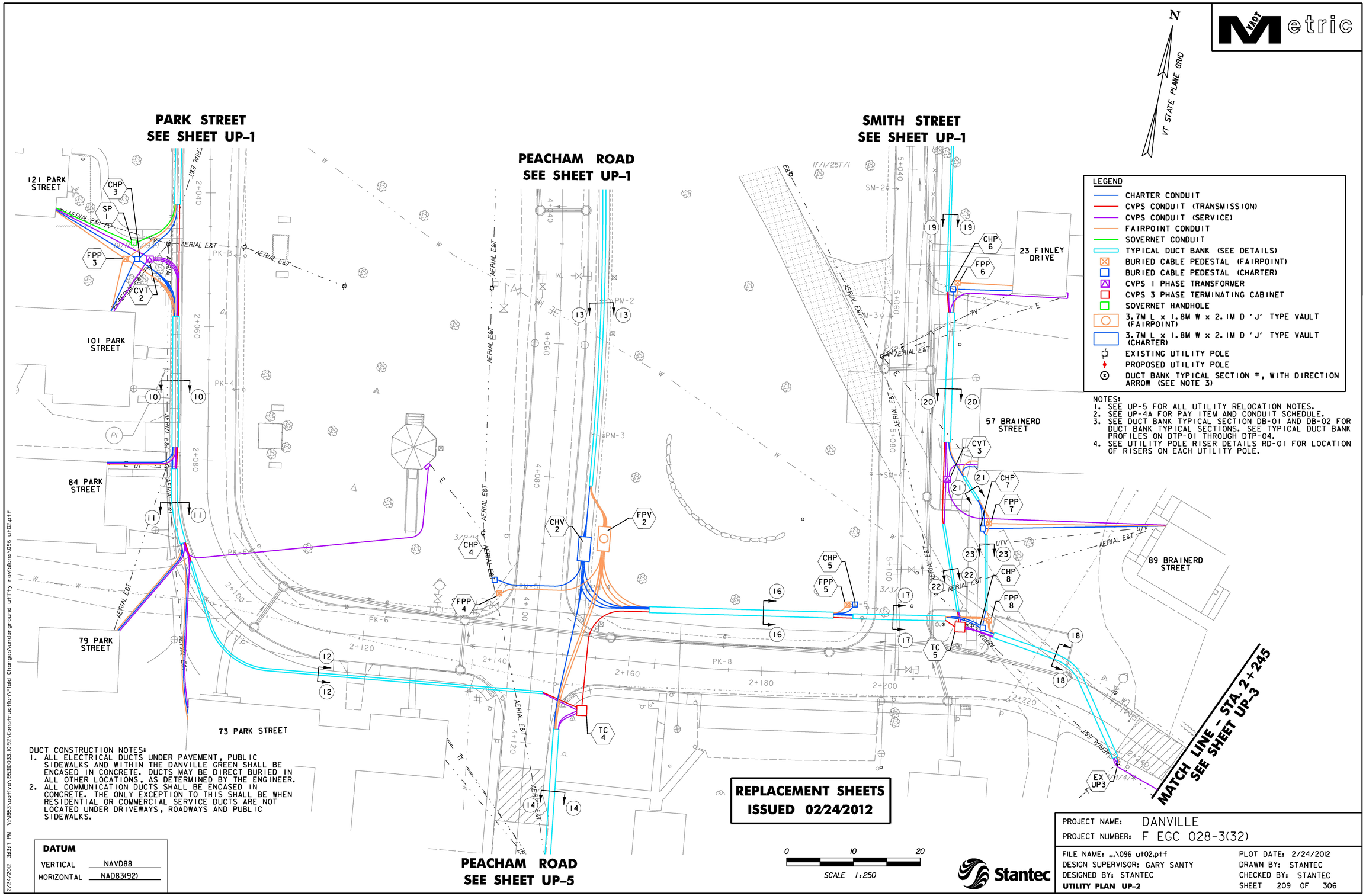

LEGEND

- CHARTER CONDUIT
- CVPS CONDUIT (TRANSMISSION)
- CVPS CONDUIT (SERVICE)
- FAIRPOINT CONDUIT
- SOVERNET CONDUIT
- TYPICAL DUCT BANK (SEE DETAILS)
- BURIED CABLE PEDESTAL (FAIRPOINT)
- BURIED CABLE PEDESTAL (CHARTER)
- CVPS 1 PHASE TRANSFORMER
- CVPS 3 PHASE TERMINATING CABINET
- SOVERNET HANDHOLE
- 3.7M L x 1.8M W x 2.1M D 'J' TYPE VAULT (FAIRPOINT)
- 3.7M L x 1.8M W x 2.1M D 'J' TYPE VAULT (CHARTER)
- EXISTING UTILITY POLE
- PROPOSED UTILITY POLE
- DUCT BANK TYPICAL SECTION #, WITH DIRECTION ARROW (SEE NOTE 3)

NOTES:
1. SEE UP-5 FOR ALL UTILITY RELOCATION NOTES.
2. SEE UP-4A FOR PAY ITEM AND CONDUIT SCHEDULE.
3. SEE DUCT BANK TYPICAL SECTION DB-01 AND DB-02 FOR DUCT BANK TYPICAL SECTIONS. SEE TYPICAL DUCT BANK PROFILES ON DTP-01 THROUGH DTP-04.
4. SEE UTILITY POLE RISER DETAILS RD-01 FOR LOCATION OF RISERS ON EACH UTILITY POLE.

DUCT CONSTRUCTION NOTES:
1. ALL ELECTRICAL DUCTS UNDER PAVEMENT, PUBLIC SIDEWALKS AND WITHIN THE DANVILLE GREEN SHALL BE ENCASED IN CONCRETE. DUCTS MAY BE DIRECT BURIED IN ALL OTHER LOCATIONS, AS DETERMINED BY THE ENGINEER.
2. ALL COMMUNICATION DUCTS SHALL BE ENCASED IN CONCRETE. THE ONLY EXCEPTION TO THIS SHALL BE WHEN RESIDENTIAL OR COMMERCIAL SERVICE DUCTS ARE NOT LOCATED UNDER DRIVEWAYS, ROADWAYS AND PUBLIC SIDEWALKS.

REPLACEMENT SHEETS ISSUED 02/24/2012

DATUM

VERTICAL	NAVD88
HORIZONTAL	NAD83(92)

0 10 20
SCALE 1:250

Stantec

PROJECT NAME:	DANVILLE
PROJECT NUMBER:	F EGC 028-3(32)
FILE NAME: ...\096 ut02.ptf	PLOT DATE: 2/24/2012
DESIGN SUPERVISOR: GARY SANTY	DRAWN BY: STANTEC
DESIGNED BY: STANTEC	CHECKED BY: STANTEC
UTILITY PLAN UP-2	SHEET 209 OF 306

2/24/2012 3:13:17 PM V:\1953\active\195310033_10192\Construction\Field Changes\underground utility revisions\096 ut02.ptf

AREA 1

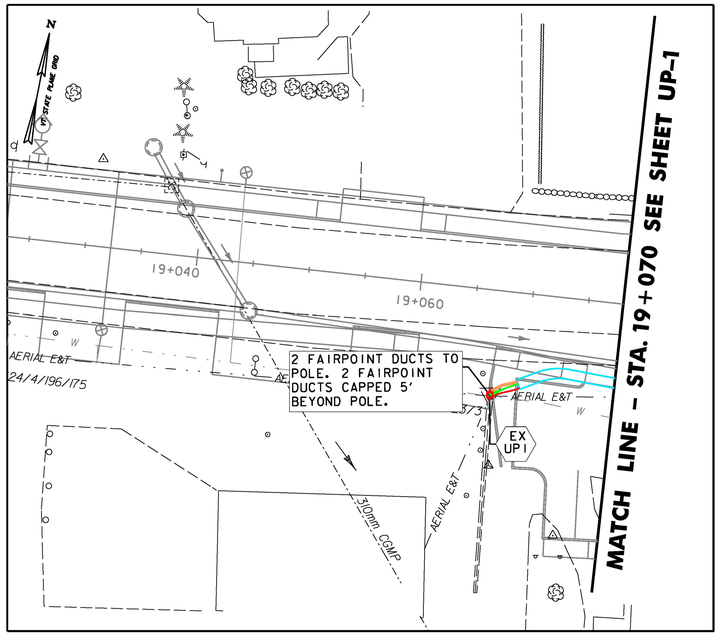

AREA 4

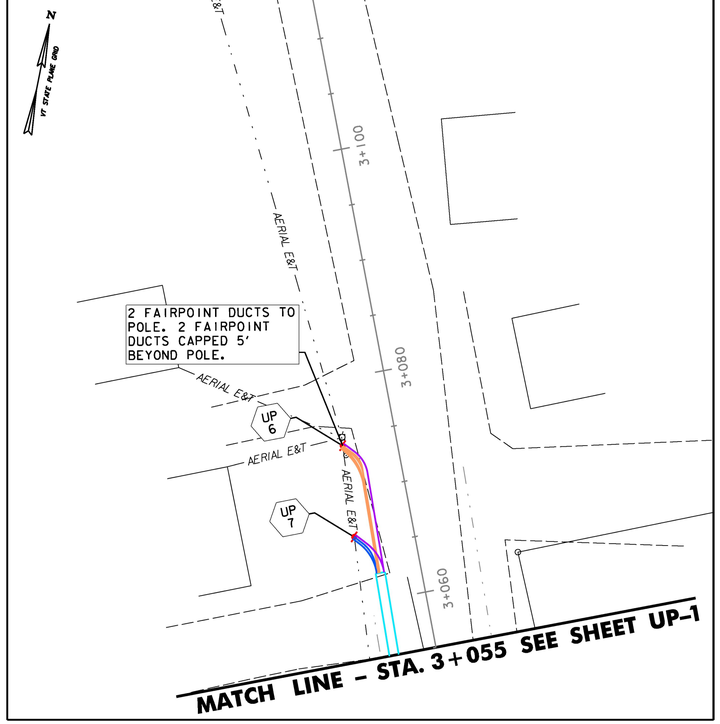

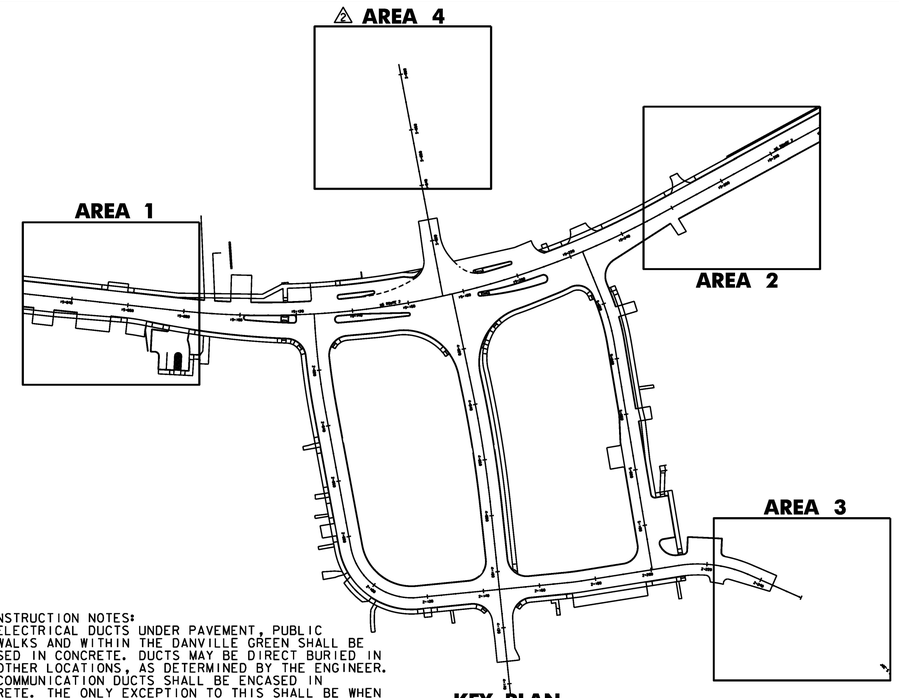

KEY PLAN
N. T. S.

DUCT CONSTRUCTION NOTES:
1. ALL ELECTRICAL DUCTS UNDER PAVEMENT, PUBLIC SIDEWALKS AND WITHIN THE DANVILLE GREEN SHALL BE ENCASED IN CONCRETE. DUCTS MAY BE DIRECT BURIED IN ALL OTHER LOCATIONS, AS DETERMINED BY THE ENGINEER.
2. ALL COMMUNICATION DUCTS SHALL BE ENCASED IN CONCRETE. THE ONLY EXCEPTION TO THIS SHALL BE WHEN RESIDENTIAL OR COMMERCIAL SERVICE DUCTS ARE NOT LOCATED UNDER DRIVEWAYS, ROADWAYS AND PUBLIC SIDEWALKS.

LEGEND
- CHARTER CONDUIT
- CVPS CONDUIT (TRANSMISSION)
- CVPS CONDUIT (SERVICE)
- FAIRPOINT CONDUIT
- SOVERNET CONDUIT
- TYPICAL DUCT BANK (SEE DETAILS)
- BURIED CABLE PEDESTAL (FAIRPOINT)
- BURIED CABLE PEDESTAL (CHARTER)
- CVPS 1 PHASE TRANSFORMER
- CVPS 3 PHASE TERMINATING CABINET
- SOVERNET HANDHOLE
- 3.7M L x 1.8M W x 2.1M D 'J' TYPE VAULT (FAIRPOINT)
- 3.7M L x 1.8M W x 2.1M D 'J' TYPE VAULT (CHARTER)
- EXISTING UTILITY POLE
- PROPOSED UTILITY POLE
- DUCT BANK TYPICAL SECTION #, WITH DIRECTION ARROW (SEE NOTE 3)

NOTES:
1. SEE UP-5 FOR ALL UTILITY RELOCATION NOTES.
2. SEE UP-4A FOR PAY ITEM AND CONDUIT SCHEDULE.
3. SEE DUCT BANK TYPICAL SECTION DB-01 AND DB-02 FOR DUCT BANK TYPICAL SECTIONS. SEE TYPICAL DUCT BANK PROFILES ON DTP-01 THROUGH DTP-04.
4. SEE UTILITY POLE RISER DETAILS RD-01 FOR LOCATION OF RISERS ON EACH UTILITY POLE.

REPLACEMENT SHEETS ISSUED 02/24/2012

AREA 2

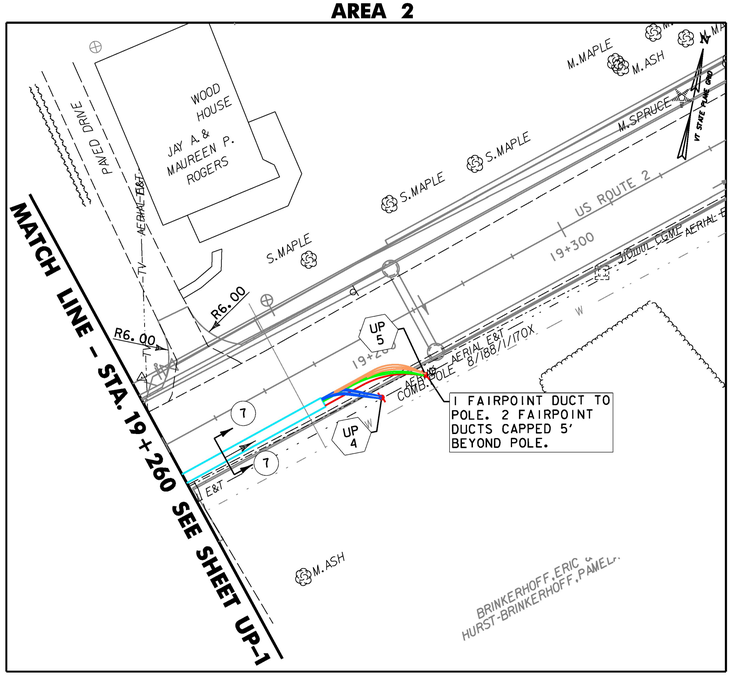

AREA 3

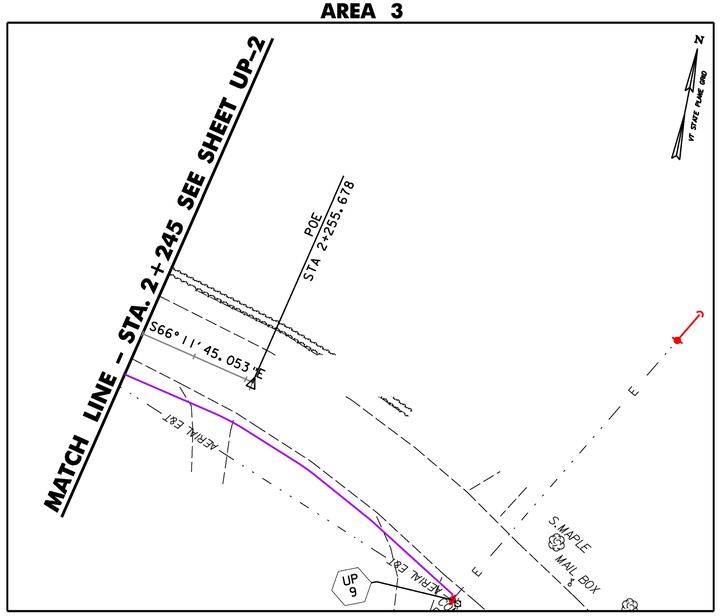

0 10 20
SCALE 1:250

Stantec

PROJECT NAME:	DANVILLE
PROJECT NUMBER:	F EGC 028-3(32)
FILE NAME: ...\097 ut03.ptf	PLOT DATE: 2/24/2012
DESIGN SUPERVISOR: GARY SANTY	DRAWN BY: STANTEC
DESIGNED BY: STANTEC	CHECKED BY: STANTEC
UTILITY PLAN UP-3	SHEET 210 OF 306

2/24/2012 3:53:18 PM V:\1953\active\95330033.0092\Construction\Field Changes\underground utility revisions\097 ut03.ptf

678.25 PULLBOX, STANDARD (SOVERNET)

DESIGNATION	STATION	OFFSET (M)	DIRECTION
SHH 1	19+116.8	18.8	RT
SHH 3	19+231.4	9.3	RT
SHH 2	4+030.7	12.2	LT

900.620 SPECIAL PROVISION (CVPS 3 PHASE VAULT)

DESIGNATION	STATION	OFFSET (M)	DIRECTION
TC 1	2+019.8	9.9	LT
TC 4	2+153.7	8.1	RT
TC 5	2+209.5	7.7	LT
TC 2	4+030.7	12.2	LT
TC 3	5+011.7	5.6	LT

900.620 SPECIAL PROVISION (CVPS 1 PHASE TRANSFORMER)

DESIGNATION	STATION	OFFSET (M)	DIRECTION
CVT 1	19+100.3	11.0	RT
CVT 2	2+050.0	9.0	RT
CVT 3	5+086.3	6.6	LT

900.620 SPECIAL PROVISION (J TYPE VAULT)(3.7M x 1.8M x 2.1M)

DESIGNATION	STATION	OFFSET (M)	DIRECTION	UTILITY
CHV 1	4+026.9	4.7	LT	CHARTER
FPV 1	4+029.1	9.7	LT	FAIRPOINT
FPV 2	4+088.5	9.0	LT	FAIRPOINT
CHV 2	4+090.3	6.2	LT	CHARTER

900.620 SPECIAL PROVISION (BURIED CABLE PEDESTAL)

DESIGNATION	STATION	OFFSET (M)	DIRECTION	UTILITY
FPP 1	19+098.0	10.8	RT	FAIRPOINT
CHP 1	19+104.3	10.4	RT	CHARTER
FPP 2	19+107.5	18.8	LT	FAIRPOINT
CHP 2	19+123.5	18.8	LT	CHARTER
SP 1	2+047.6	11.4	RT	SOVERNET
CHP 3	2+050.0	10.9	RT	CHARTER
FPP 3	2+050.0	12.7	RT	FAIRPOINT
FPP 5	2+192.5	10.4	LT	FAIRPOINT
CHP 5	2+193.6	10.5	LT	CHARTER
CHP 8	2+212.4	7.8	LT	CHARTER
FPP 8	2+213.1	9.0	LT	FAIRPOINT
CHP 4	4+096.1	6.8	RT	CHARTER
FPP 4	4+098.0	5.9	RT	FAIRPOINT
FPP6	5+056.8	7.3	LT	FAIRPOINT
CHP 6	5+057.8	6.6	LT	CHARTER
FPP7	5+092.8	13.0	LT	FAIRPOINT
CHP 7	5+093.5	12.1	LT	CHARTER

UTILITY POLE

DESIGNATION	STATION	OFFSET (M)	DIRECTION
EX UP 1	19+059.1	9.3	RT
UP 1	19+094.3	10.0	RT
UP 2	19+102.2	10.5	RT
UP 3	19+256.3	5.4	RT
UP 4	19+278.8	5.5	RT
UP 5	19+283.2	5.6	RT
EX UP 3	2+237.8	4.0	RT
UP 9	2+282.2	4.5	RT
UP 7	3+066.0	5.3	LT
UP 6	3+074.1	4.8	LT
EX UP 2	4+141.0	5.7	LT
UP 8	4+156.3	5.0	RT

2/24/2012 3:53:9 PM V:\1953\active\195300033.0092\Construction\Field Changes\underground utility revisions\098 ut04.ptf

REPLACEMENT SHEETS ISSUED 02/24/2012

Stantec

PROJECT NAME: DANVILLE
PROJECT NUMBER: F EGC 028-3(32)

FILE NAME: ...\098 ut04.ptf
DESIGN SUPERVISOR: GARY SANTY
DESIGNED BY: STANTEC
UTILITY PLAN UP-4

PLOT DATE: 2/24/2012
DRAWN BY: STANTEC
CHECKED BY: STANTEC
SHEET 211 OF 306

UTILITY CONDUIT SCHEDULE

CHARTER COMMUNICATIONS			
CONDUIT DESIGNATION	SIZE (mm)	FROM	TO
CH 1	100	UP 2	CHV 1
CH 2	100	UP 2	CHV 1
CH 3	100	UP 2	CHV 1
CH 4	100	UP 2	CHV 1
CH 5	100	UP 2	CHP 1
CH 6	50	CHP 1	CHP 2
CH 7	50	CHP 1	THE DOLE BLOCK
CH 8	100	CHP 1	CHP 3
CH 9	100	CHV 1	UP 4
CH 10	100	CHV 1	UP 4
CH 11	100	CHV 1	UP 4
CH 12	100	CHV 1	UP 4
CH 13	100	CHV 1	UP 7
CH 14	100	CHV 1	UP 7
CH 15	50	CHP 3	84 PARK STREET
CH 16	50	CHP 3	79 PARK STREET
CH 17	50	CHP 3	73 PARK STREET
CH 18	100	CHV 1	CHV 2
CH 19	100	CHV 1	CHV 2
CH 20	100	CHV 1	CHV 2
CH 21	100	CHV 2	UP 8
CH 22	100	CHV 2	UP 8
CH 23	100	CHV 2	UP 8
CH 24	100	CHV 2	CHP 5
CH 25	100	CHV 2	CHP 8
CH 26	100	CHV 2	CHP 8
CH 27	100	CHP 8	EXUP 3
CH 28	100	CHP 6	CHP 7
CH 29	50	CHP 7	57 BRAINERD STREET
CH 30	100	CHP 7	CHP 8
CH 31	50	CHP 3	121 PARK STREET
CH 32	50	CHP 3	101 PARK STREET
CH 33	100	CHV 2	CHP 4
CH 34	50	CHP 7	89 BRAINERD STREET
CH 35	50	CHP 6	23 FINLEY DRIVE

CENTRAL VERMONT PUBLIC SERVICE			
CONDUIT DESIGNATION	SIZE (mm)	FROM	TO
CV 1	125	EXUP 1	TC 1
CV 2	75	CVT 1	TOWN HALL
CV 3	125	UP 2	TC 2
CV 4	75	UP 1	CVT 1
CV 5	75	CVT 1	HH-G2
CV 6	75	CVT 2	121 PARK STREET
CV 7	125	TC 2	UP 3
CV 8	125	TC 3	UP 5
CV 9	75	TC 2	UP 7
CV 10	75	TC 2	UP 6
CV 11	125	TC 1	TC 4
CV 12	75	TC 4	CVT 2
CV 13	75	CVT 2	101 PARK STREET
CV 14	75	CVT 2	79 PARK STREET
CV 15	75	CVT 2	PARK GAZEBO
CV 16	75	CVT 2	84 PARK STREET
CV 17	75	TC 4	EXUP 2
CV 18	75	TC 4	UP 8
CV 19	125	TC 4	TC 5
CV 20	75	TC 5	EXUP 3
CV 21	75	TC 5	UP 9
CV 22	125	TC 5	TC 3
CV 23	75	TC 5	CVT 3
CV 24	75	CVT 3	89 BRAINERD STREET
CV 25	75	CVT 3	57 BRAINERD STREET
CV 26	75	CVT 3	42 SMITH STREET
CV 27	75	CVT 3	23 FINLEY DRIVE
CV 28	75	CVT 2	73 PARK STREET

FAIRPOINT COMMUNICATIONS			
CONDUIT DESIGNATION	SIZE (mm)	FROM	TO
FP 1	100	5' BEYOND EXUP 1	FPV 1
FP 2	100	5' BEYOND EXUP 1	FPV 1
FP 3	100	EXUP 1	FPV 1
FP 4	100	EXUP 1	FPV 1
FP 5	100	UP 1	FPV 1
FP 6	100	UP 1	FPV 1
FP 7	100	UP 1	FPP 1
FP 8	100	FPP 1	FPP 3
FP 9	50	FPP 1	FPP 2
FP 10	100	FPV 1	UP 3
FP 11	100	FPV 1	UP 3
FP 12	100	FPV 1	UP 3
FP 13	100	FPV 1	UP 5
FP 14	100	FPV 1	5' BEYOND UP 5
FP 15	100	FPV 1	5' BEYOND UP 5
FP 16	100	FPV 1	UP 6
FP 17	100	FPV 1	UP 6
FP 18	100	FPV 1	5' BEYOND UP 6
FP 19	100	FPV 1	5' BEYOND UP 6
FP 20	50	FPP 3	84 PARK STREET
FP 21	50	FPP 3	79 PARK STREET
FP 22	50	FPP 3	73 PARK STREET
FP 23	100	FPV 1	FPV 2
FP 24	100	FPV 1	FPV 2
FP 25	100	FPV 1	FPV 2
FP 26	100	FPV 1	FPV 2
FP 27	100	FPV 1	FPV 2
FP 28	100	FPV 1	FPV 2
FP 29	100	FPV 2	EXUP 2
FP 30	100	FPV 2	EXUP 2
FP 31	100	FPV 2	5' BEYOND UP 8
FP 32	100	FPV 2	5' BEYOND UP 8
FP 33	100	FPV 2	5' BEYOND UP 8
FP 34	100	FPV 2	5' BEYOND UP 8
FP 35	100	FPV 2	FPP 5
FP 36	100	FPV 2	FPP 8
FP 37	100	FPV 2	FPP 8
FP 38	100	FPP 8	EXUP 3
FP 39	100	FPP 8	EXUP 3
FP 40	100	FPP 6	FPP 7
FP 41	50	FPP 7	57 BRAINERD STREET
FP 42	100	FPP 7	FPP 8
FP 43	50	FPP 3	121 PARK STREET
FP 44	50	FPP 3	101 PARK STREET
FP 45	100	FPV 2	FPP 4
FP 46	50	FPP 7	89 BRAINERD STREET
FP 47	50	FPP 6	23 FINLEY DRIVE

SOVERNET			
CONDUIT DESIGNATION	SIZE (mm)	FROM	TO
SO 1	100	EXUP 1	SHH 1
SO 2	100	EXUP 1	SHH 1
SO 3	100	SHH 1	SHH 2
SO 4	100	SHH 1	SHH 2
SO 5	100	SHH 2	SHH 3
SO 6	100	SHH 2	SHH 3
SO 7	100	SHH 3	UP 5
SO 8	100	SHH 3	UP 5
SO 9	100	SHH 1	SP 1
SO 10	50	SP 1	121 PARK STREET

REPLACEMENT SHEETS ISSUED 02/24/2012

Stantec

PROJECT NAME: DANVILLE
PROJECT NUMBER: F EGC 028-3(32)

FILE NAME: ...\098 ut04a.ptf
DESIGN SUPERVISOR: GARY SANTY
DESIGNED BY: STANTEC
UTILITY PLAN UP-4A

PLOT DATE: 2/24/2012
DRAWN BY: STANTEC
CHECKED BY: STANTEC
SHEET 211A OF 306

2/24/2012 3:43:29 PM V:\1953\active\195300033.0092\Construction\Field Changes\underground utility revisions\098 ut04a.ptf

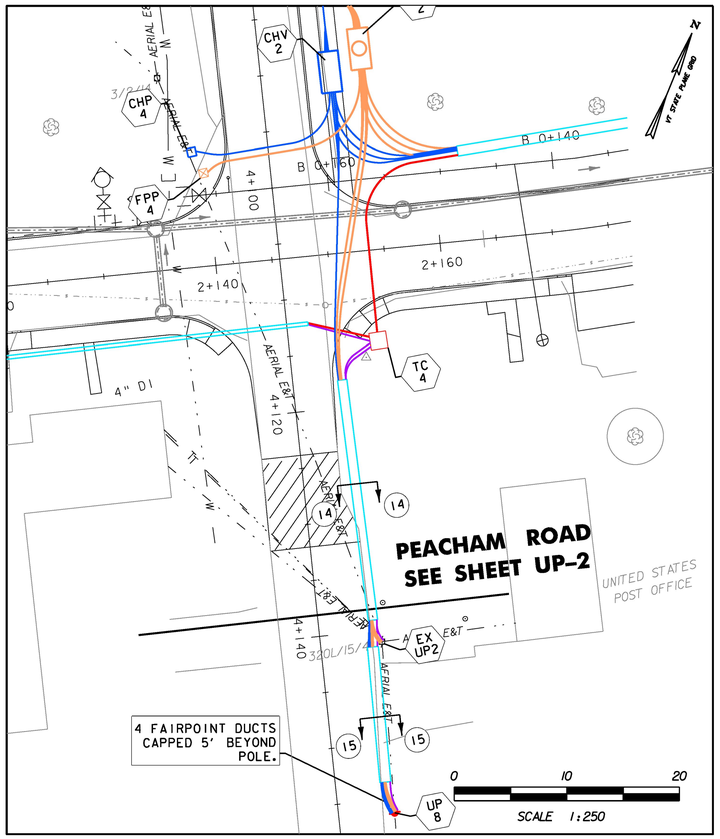

SITE PLAN

DUCT CONSTRUCTION NOTES:
1. ALL ELECTRICAL DUCTS UNDER PAVEMENT, PUBLIC SIDEWALKS AND WITHIN THE DANVILLE GREEN SHALL BE ENCASED IN CONCRETE. DUCTS MAY BE DIRECT BURIED IN ALL OTHER LOCATIONS, AS DETERMINED BY THE ENGINEER.
2. ALL COMMUNICATION DUCTS SHALL BE ENCASED IN CONCRETE. THE ONLY EXCEPTION TO THIS SHALL BE WHEN RESIDENTIAL OR COMMERCIAL SERVICE DUCTS ARE NOT LOCATED UNDER DRIVEWAYS, ROADWAYS AND PUBLIC SIDEWALKS.

LEGEND
- CHARTER CONDUIT
- CVPS CONDUIT (TRANSMISSION)
- CVPS CONDUIT (SERVICE)
- FAIRPOINT CONDUIT
- SOVERNET CONDUIT
- TYPICAL DUCT BANK (SEE DETAILS)
- BURIED CABLE PEDESTAL (FAIRPOINT)
- BURIED CABLE PEDESTAL (CHARTER)
- CVPS 1 PHASE TRANSFORMER
- CVPS 3 PHASE TERMINATING CABINET
- SOVERNET HANDHOLE
- 3.7M L x 1.8M W x 2.1M D 'J' TYPE VAULT (FAIRPOINT)
- 3.7M L x 1.8M W x 2.1M D 'J' TYPE VAULT (CHARTER)
- EXISTING UTILITY POLE
- PROPOSED UTILITY POLE
- DUCT BANK TYPICAL SECTION #, WITH DIRECTION ARROW (SEE NOTE 3)

NOTES:
1. SEE UP-4A FOR PAY ITEM AND CONDUIT SCHEDULE.
2. SEE DUCT BANK TYPICAL SECTION DB-01 AND DB-02 FOR DUCT BANK TYPICAL SECTIONS. SEE TYPICAL DUCT BANK PROFILES ON DTP-01 THROUGH DTP-04.
3. SEE UTILITY POLE RISER DETAILS RD-01 FOR LOCATION OF RISERS ON EACH UTILITY POLE.

UTILITY RELOCATION NOTES

GENERAL NOTES:

1. UTILITY DUCT LAYOUTS AND PROFILES ARE SCHEMATIC AND INTENDED TO IDENTIFY DESIRED DUCT ROUTES AND POTENTIAL CONFLICTS. LOCATIONS PROPOSED ON THE PLANS ARE SHOWN AS APPROXIMATE. HORIZONTAL AND VERTICAL DUCT LOCATIONS SHALL BE REVIEWED IN THE FIELD AND ADJUSTED AS NECESSARY AS DIRECTED BY THE RESIDENT ENGINEER. FINAL LOCATIONS SHALL BE MARKED IN THE FIELD AND APPROVED BY THE UTILITY COMPANY REPRESENTATIVE RESPONSIBLE FOR CONSTRUCTION OVERSIGHT AND BY THE RESIDENT ENGINEER PRIOR TO COMMENCING ANY UTILITY WORK.

2. UTILITY POLE, VAULT PEDESTAL AND TERMINATING CABINET LOCATIONS SHOWN ON THE PLANS SHALL BE ADJUSTED AS NECESSARY AS DIRECTED BY THE RESIDENT ENGINEER. FINAL LOCATIONS SHALL BE MARKED IN THE FIELD AND APPROVED BY THE UTILITY REPRESENTATIVE RESPONSIBLE FOR CONSTRUCTION OVERSIGHT AND BY THE RESIDENT ENGINEER PRIOR TO COMMENCING ANY UTILITY WORK.

3. EXISTING UTILITY LOCATIONS SHOWN ON THE PLANS AND PROFILES ARE CONSIDERED APPROXIMATE. EXPLORATORY EXCAVATION SHALL BE USED AS NECESSARY TO LOCATE EXACT DEPTH OF EXISTING UNDERGROUND UTILITIES WITHIN VICINITY OF THE UTILITY TRENCH PRIOR TO COMMENCING ANY UTILITY WORK. CONFLICTS BETWEEN THE PROPOSED UTILITY DUCTS AND EXISTING UTILITIES SHALL BE RESOLVED BY THE CONTRACTOR. CONFLICT RESOLUTION SHALL BE REVIEWED AND APPROVED BY THE RESIDENT ENGINEER AND UTILITY REPRESENTATIVE RESPONSIBLE FOR CONSTRUCTION PRIOR TO COMMENCING ANY UTILITY WORK.

CVPS RELOCATION:

1. THE CONTRACTOR SHALL BE RESPONSIBLE FOR CONSTRUCTION OF AN UNDERGROUND DUCT SYSTEM, INCLUDING DUCT BANKS, VAULTS, PEDESTALS/PADS ALONG WITH ASSOCIATED TRENCHING, BACKFILLING, CONCRETE DUCT ENCASEMENTS AND OTHER ASSOCIATED CONSTRUCTION. COST FOR THIS WORK SHALL BE PAID UNDER THE FOLLOWING ITEMS:
   900.620 SPECIAL PROVISION (CVPS 1 PHASE TRANSFORMER)
   900.620 SPECIAL PROVISION (CVPS 3 PHASE VAULT)
   900.640 SPECIAL PROVISION (DIRECT BURIAL DUCT BANK, 1-4 DUCTS) (75MM)
   900.640 SPECIAL PROVISION (DIRECT BURIAL DUCT BANK, 1-4 DUCTS) (125MM)
   900.640 SPECIAL PROVISION (CONCRETE ENCASED DUCT BANK, 1-4 DUCTS) (75MM)
   900.640 SPECIAL PROVISION (CONCRETE ENCASED DUCT BANK, 1-4 DUCTS) (125MM)
2. THE COST FOR TRENCH EXCAVATION, BACKFILLING OF AND TEMPORARY STABILIZATION OF UTILITY TRENCHES WILL NOT BE PAID FOR SEPARATELY BUT WILL BE CONSIDERED INCIDENTAL TO EACH DUCT BANK ITEM.
3. THE COST FOR TEMPORARILY PATCHING PAVEMENT SHALL BE PAID FOR UNDER ITEM 900.680 SPECIAL PROVISION (BITUMINOUS CONCRETE PAVEMENT, SMALL QUANTITY). PAY LIMITS FOR THE PAVEMENT PATCH WILL BE AS SHOWN ON DUCT BANK TYPICAL SECTIONS DB-01 AND DB-02.
4. THE CONTRACTOR SHALL ALSO INSTALL METER SOCKETS AND ALL RESIDENTIAL/COMMERCIAL ELECTRICAL SERVICE ENTRANCE CONNECTIONS FROM PEDESTAL AND/OR TRANSFORMER LOCATIONS TO OWNER ELECTRICAL PANELS. THIS WORK SHALL BE PAID FOR UNDER ITEM 900.620 SPECIAL PROVISION (REPLACEMENT OF EXISTING METER SOCKET).
5. THE UTILITY COMPANY WILL PROVIDE LABOR AND MATERIALS NECESSARY FOR THE INSTALLATION OF ELECTRICAL METERS, MAKE CONNECTIONS IN THE TRANSFORMER/PEDESTAL, AND WILL REMOVE AND DISPENSE OF ALL EXISTING ELECTRICAL DISTRIBUTION FACILITIES/COMPONENTS BEING REPLACED BY THE NEW UNDERGROUND SYSTEM.
6. ALL AERIAL RELOCATION INCLUDING SETTING NEW POLES AND GUY WIRES WILL BE COMPLETED BY THE UTILITY COMPANY.
7. THE CONTRACTOR IS RESPONSIBLE FOR ENSURING THAT ALL EQUIPMENT INSTALLED MEETS THE UTILITY COMPANY MATERIAL AND CONSTRUCTION SPECIFICATIONS.

CHARTER, FAIRPOINT AND SOVERNET RELOCATIONS:

1. THE CONTRACTOR SHALL BE RESPONSIBLE FOR CONSTRUCTION OF AN UNDERGROUND DUCT SYSTEM, INCLUDING DUCT BANKS, VAULTS, PEDESTALS/PADS ALONG WITH ASSOCIATED TRENCHING, BACKFILLING, CONCRETE DUCT ENCASEMENTS AND OTHER ASSOCIATED CONSTRUCTION. COST FOR THIS WORK SHALL BE PAID UNDER THE FOLLOWING ITEMS:
   900.620 SPECIAL PROVISION (J TYPE VAULT) (3.7 M x 1.8 M x 2.1 M)
   900.620 SPECIAL PROVISION (BURIED CABLE PEDESTAL)
   900.640 SPECIAL PROVISION (CONCRETE ENCASED DUCT BANK, 1-4 DUCTS) (50MM)
   900.640 SPECIAL PROVISION (CONCRETE ENCASED DUCT BANK, 1-4 DUCTS) (100MM)
   900.640 SPECIAL PROVISION (CONCRETE ENCASED DUCT BANK, 5-8 DUCTS) (100MM)
   900.640 SPECIAL PROVISION (DIRECT BURIAL DUCT BANK, 1-4 DUCTS) (50MM)
   900.640 SPECIAL PROVISION (DIRECT BURIAL DUCT BANK, 1-4 DUCTS) (100MM)
2. THE COST FOR TRENCH EXCAVATION, BACKFILLING AND TEMPORARY STABILIZATION OF UTILITY TRENCHES WILL NOT BE PAID FOR SEPARATELY BUT WILL BE CONSIDERED INCIDENTAL TO EACH DUCT BANK ITEM.
3. THE COST FOR TEMPORARILY PATCHING PAVEMENT SHALL BE PAID FOR UNDER ITEM 900.680 SPECIAL PROVISION (BITUMINOUS CONCRETE PAVEMENT, SMALL QUANTITY). PAY LIMITS FOR THE PAVEMENT PATCH WILL BE AS SHOWN ON DUCT BANK TYPICAL SECTIONS DB-01 AND DB-02.
4. THE UTILITY COMPANY WILL PROVIDE LABOR AND MATERIALS NECESSARY FOR THE INSTALLATION OF ALL RESIDENTIAL/COMMERCIAL SERVICE ENTRANCE CONNECTIONS FROM PEDESTAL AND/OR TRANSFORMER LOCATIONS, AND WILL REMOVE AND DISPOSE OF ALL EXISTING FACILITIES COMPONENTS BEING REPLACED BY THE NEW UNDERGROUND SYSTEM.
5. ALL AERIAL RELOCATION INCLUDING SETTING NEW POLES AND GUY WIRES WILL BE COMPLETED BY THE UTILITY COMPANY.
6. THE CONTRACTOR IS RESPONSIBLE FOR ENSURING THAT ALL EQUIPMENT INSTALLED MEETS THE UTILITY COMPANY MATERIAL AND CONSTRUCTION SPECIFICATIONS.
7. ALL DUCTS MUST HAVE 300 LB PULL ROPE WITH AT LEAST ONE DUCT CONTAINING A MEASURING TAPE TO EACH POLE/PEDESTAL LOCATION.
8. CONDUIT ALIGNMENT SHOULD NOT BE TANGENT TO POLES. THIS WILL CONFLICT WITH ANCHOR PLACEMENT AND POSSIBLE POLE PLACEMENTS.
9. ALL CONDUIT BENDS AT PEDESTAL LOCATION TO BE CAPPED AND STRAPPED TOGETHER 3" ABOVE GROUND LEVEL WITH #6 GROUND WIRE EXTENDING TO ANY POWER PEDESTAL WITHIN 10' OF PROPOSED TELCO PEDESTAL.
10. EAST/WEST DUCT ELEVATION ENTERING THE VAULTS MUST BE EQUAL AND MUST START AT THE LOWEST MOST PENETRATIONS. NORTH/SOUTH DUCT ELEVATION ENTERING THE VAULTS MUST BE EQUAL AND MUST START AT THE BOTTOM OF THE TOP 12 PENETRATIONS.

REPLACEMENT SHEETS ISSUED 02/24/2012

VAOT Metric

Stantec

PROJECT NAME: DANVILLE
PROJECT NUMBER: F EGC 028-3(32)

FILE NAME: ...\099 ut05.ptf
DESIGN SUPERVISOR: GARY SANTY
DESIGNED BY: STANTEC
UTILITY PLAN UP-5

PLOT DATE: 2/24/2012
DRAWN BY: STANTEC
CHECKED BY: STANTEC
SHEET 212 OF 306

2/24/2012 3:44:41 PM V:\1953\active\195300033.0192\Construction\Field Changes\Underground utility revisions\099 ut05.ptf

CONDUIT PER UTILITY IN DUCT:
CHARTER - (2) ø 50
CVPS - (1) ø 75
FAIRPOINT - (1) ø 100
SOVERNET - N/A

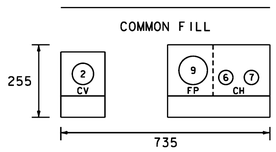

UTILITY DUCT BANK TYPICAL SECTION 1

N.T.S.
19+103.8, RT - 19+107.1, LT
DUCT LENGTH - 11.6m

CONDUIT PER UTILITY IN DUCT:
CHARTER - N/A
CVPS - (1) ø 125
FAIRPOINT - (4) ø 100
SOVERNET - (2) ø 100

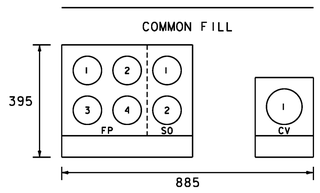

UTILITY DUCT BANK TYPICAL SECTION 2

N.T.S.
19+106.5, RT - 19+082.9, RT
DUCT LENGTH - 21.9m

CONDUIT PER UTILITY IN DUCT:
CHARTER - (5) ø 100
CVPS - (2) ø 125
(1) ø 75
FAIRPOINT - (7) ø 100
SOVERNET - (2) ø 100

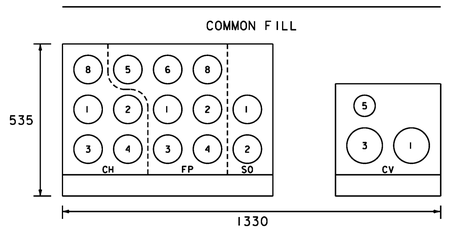

UTILITY DUCT BANK TYPICAL SECTION 3

N.T.S.
19+105.6, RT - 19+113.5, RT
DUCT LENGTH - 8.5m

CONDUIT PER UTILITY IN DUCT:
CHARTER - (4) ø 100
CVPS - (1) ø 125
FAIRPOINT - (6) ø 100
SOVERNET - (2) ø 100

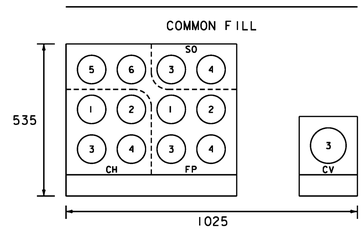

UTILITY DUCT BANK TYPICAL SECTION 4

N.T.S.
2+018.2, RT - 4+028.6, RT
DUCT LENGTH - 53.6m

CONDUIT PER UTILITY IN DUCT:
CHARTER - (4) ø 100
CVPS - (1) ø 125
FAIRPOINT - (6) ø 100
SOVERNET - (2) ø 100

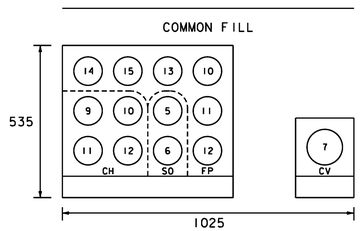

UTILITY DUCT BANK TYPICAL SECTION 5

N.T.S.
19+195.1, RT - 19+225.2, RT
DUCT LENGTH - 35.0m

CONDUIT PER UTILITY IN DUCT:
CHARTER - (4) ø 100
CVPS - (2) ø 125
FAIRPOINT - (6) ø 100
SOVERNET - (2) ø 100

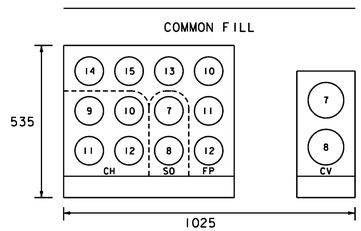

UTILITY DUCT BANK TYPICAL SECTION 6

N.T.S.
19+234.5, RT - 19+252.1, RT
DUCT LENGTH - 18.2m

CONDUIT PER UTILITY IN DUCT:
CHARTER - (4) ø 100
CVPS - (1) ø 125
FAIRPOINT - (3) ø 100
SOVERNET - (2) ø 100

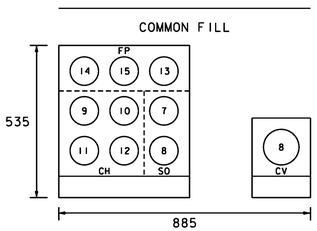

UTILITY DUCT BANK TYPICAL SECTION 7

N.T.S.
19+256.3, RT - 19+274.1, RT
DUCT LENGTH - 17.8m

CONDUIT PER UTILITY IN DUCT:
CHARTER - (2) ø 100
CVPS - (2) ø 75
FAIRPOINT - (4) ø 100
SOVERNET - N/A

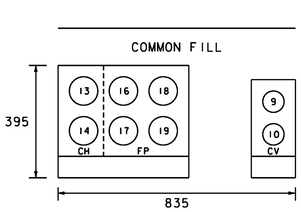

UTILITY DUCT BANK TYPICAL SECTION 8

N.T.S.
19+177.9, RT - 3+062.4, LT
DUCT LENGTH - 77.4m

CONDUIT PER UTILITY IN DUCT:
CHARTER - (1) ø 100
CVPS - (1) ø 100
FAIRPOINT - (1) ø 100
SOVERNET - (1) ø 100

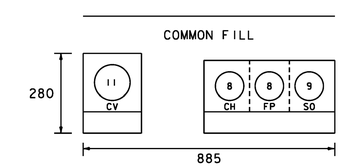

UTILITY DUCT BANK TYPICAL SECTION 9

N.T.S.
2+024.7, RT - 2+041.6, RT
DUCT LENGTH - 17.1m

CONDUIT PER UTILITY IN DUCT:
CHARTER - (3) ø 50
CVPS - (1) ø 125
(5) ø 75
FAIRPOINT - (3) ø 50
SOVERNET - N/A

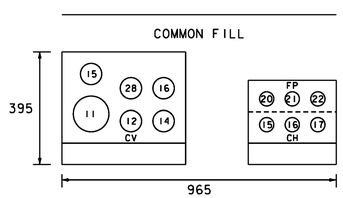

UTILITY DUCT BANK TYPICAL SECTION 10

N.T.S.
2+058.4, RT - 2+078.2, RT
DUCT LENGTH - 19.9m

CONDUIT PER UTILITY IN DUCT:
CHARTER - (2) ø 50
CVPS - (1) ø 125
(4) ø 75
FAIRPOINT - (2) ø 50
SOVERNET - N/A

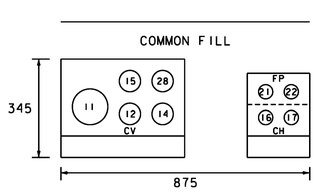

UTILITY DUCT BANK TYPICAL SECTION 11

N.T.S.
2+081.6, RT - 2+090.7, RT
DUCT LENGTH - 11.4m

CONDUIT PER UTILITY IN DUCT:
CHARTER - N/A
CVPS - (1) ø 125
(1) ø 75
FAIRPOINT - N/A
SOVERNET - N/A

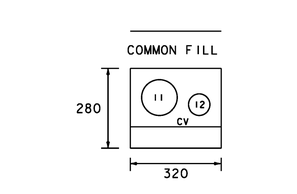

UTILITY DUCT BANK TYPICAL SECTION 12

N.T.S.
2+092.8, RT - 2+147.6, RT
DUCT LENGTH - 65.8m

NOTES:
1. DUCT BANK TYPICAL SECTIONS ARE NOT INTENDED TO DEPICT WHETHER THE DUCT IS CONCRETE ENCASED OR DIRECT BURY.
2. ALL DIMENSIONS ARE IN MILLIMETERS UNLESS OTHERWISE NOTED.
3. THE DIMENSIONS SHOWN SHALL BE CONSIDERED THE MINIMUM DUCT DIMENSIONS.
4. EACH CONDUIT SHALL HAVE A MINIMUM OF 40 COVER IN ALL DIRECTIONS.
5. THE POWER AND COMMUNICATION CONDUIT SHALL BE SEPARATED BY A MINIMUM OF 300.
6. 75 OF BEDDING MATERIAL SHALL BE PLACED BELOW EACH DUCT. BEDDING MATERIAL SHALL MEET GRADATION OF VTRANS SPECIFICATION 703.03, AND SHALL BE PAID INCIDENTAL TO DUCT ITEMS.
7. THE VERTICAL DEPTH SHOWN REPRESENTS THE MINIMUM HEIGHT OF THE LARGEST DUCT IN DETAIL, INCLUDING BEDDING MATERIAL DEPTH.
8. THE DEPTH OF FILL OVER EACH DUCT VARIES IN ALL CASES.
9. PAY LIMITS FOR TEMPORARY PAVEMENT PATCHING SHALL BE THE LENGTH OF PIPE TIMES THE WIDTH SHOWN IN THE DETAILS ABOVE.

REPLACEMENT SHEETS ISSUED 02/24/2012

Stantec

PROJECT NAME: DANVILLE
PROJECT NUMBER: F EGC 028-3(32)

FILE NAME: ...\100 det_duct typical.ptf
DESIGN SUPERVISOR: GARY SANTY
DESIGNED BY: STANTEC
DUCT BANK TYPICAL SECTIONS DB-01
PLOT DATE: 2/24/2012
DRAWN BY: STANTEC
CHECKED BY: STANTEC
SHEET 213 OF 306

2/24/2012 3:41:02 PM V:\1853\active\185310033.0092\Construction\Field Changes\underground utility revisions\100 det_duct typical.ptf

CONDUIT PER UTILITY IN DUCT:
CHARTER - (3) ø 100
CVPS - N/A
FAIRPOINT - (6) ø 100
SOVERNET - N/A

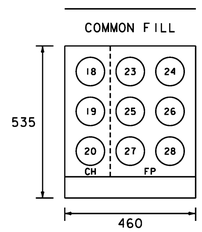

UTILITY DUCT BANK TYPICAL SECTION 13

N.T.S.
4+035.7, LT - 4+077.5, LT
DUCT LENGTH - 42.4m

CONDUIT PER UTILITY IN DUCT:
CHARTER - (3) ø 100
CVPS - (2) ø 75
FAIRPOINT - (6) ø 100
SOVERNET - N/A

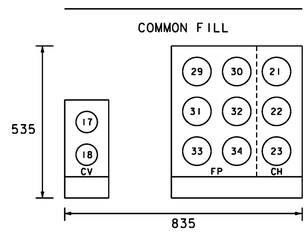

UTILITY DUCT BANK TYPICAL SECTION 14

N.T.S.
4+177.6, LT - 4+139.1, LT
DUCT LENGTH - 21.5m

CONDUIT PER UTILITY IN DUCT:
CHARTER - (3) ø 100
CVPS - (1) ø 75
FAIRPOINT - (4) ø 100
SOVERNET - N/A

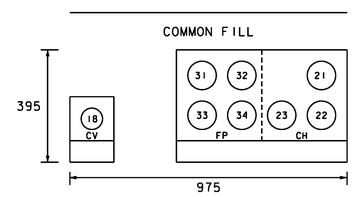

UTILITY DUCT BANK TYPICAL SECTION 15

N.T.S.
4+141.4, LT - 4+153.5, LT
DUCT LENGTH - 12.1m

CONDUIT PER UTILITY IN DUCT:
CHARTER - (3) ø 100
CVPS - (1) ø 125
FAIRPOINT - (3) ø 100
SOVERNET - N/A

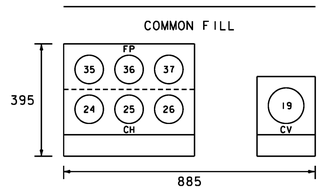

UTILITY DUCT BANK TYPICAL SECTION 16

N.T.S.
2+162.3, LT - 2+190.4, LT
DUCT LENGTH - 27.6m

CONDUIT PER UTILITY IN DUCT:
CHARTER - (2) ø 100
CVPS - (1) ø 125
FAIRPOINT - (2) ø 100
SOVERNET - N/A

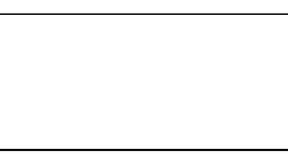

UTILITY DUCT BANK TYPICAL SECTION 17

N.T.S.
2+193.4, LT - 2+213.9, LT
DUCT LENGTH - 13.9m

CONDUIT PER UTILITY IN DUCT:
CHARTER - (1) ø 100
CVPS - (2) ø 75
FAIRPOINT - (2) ø 100
SOVERNET - N/A

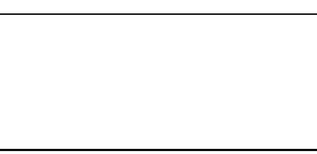

UTILITY DUCT BANK TYPICAL SECTION 18

N.T.S.
2+213.9, LT - 2+237.0, RT
DUCT LENGTH - 29.5m

CONDUIT PER UTILITY IN DUCT:
CHARTER - N/A
CVPS - (1) ø 125
(1) ø 75
FAIRPOINT - N/A
SOVERNET - N/A

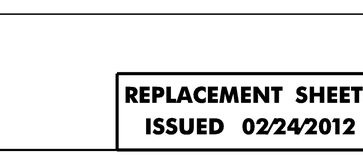

UTILITY DUCT BANK TYPICAL SECTION 19

N.T.S.
5+031.9, LT - 5+058.1, LT
DUCT LENGTH - 26.5m

CONDUIT PER UTILITY IN DUCT:
CHARTER - (1) ø 100
CVPS - (1) ø 125
(2) ø 75
FAIRPOINT - (1) ø 100
SOVERNET - N/A

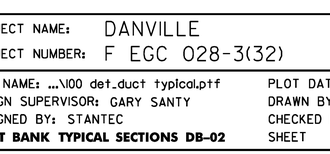

UTILITY DUCT BANK TYPICAL SECTION 20

N.T.S.
5+061.3, LT - 5+080.8, LT
DUCT LENGTH - 19.4m

CONDUIT PER UTILITY IN DUCT:
CHARTER - (1) ø 100
CVPS - (1) ø 50
CVPS - N/A
FAIRPOINT - (1) ø 100
(1) ø 50
SOVERNET - N/A

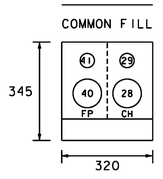

UTILITY DUCT BANK TYPICAL SECTION 21

N.T.S.
5+085.8, LT - 5+089.3, LT
DUCT LENGTH - 4.2m

CONDUIT PER UTILITY IN DUCT:
CHARTER - N/A
CVPS - (1) ø 125
(1) ø 75
FAIRPOINT - N/A
SOVERNET - N/A

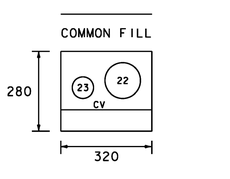

UTILITY DUCT BANK TYPICAL SECTION 22

N.T.S.
5+093.0, LT - 5+106.1, LT
DUCT LENGTH - 13.3m

CONDUIT PER UTILITY IN DUCT:
CHARTER - (1) ø 100
CVPS - N/A
FAIRPOINT - (1) ø 100
SOVERNET - N/A

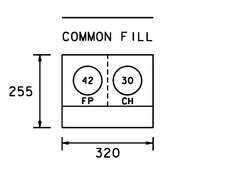

UTILITY DUCT BANK TYPICAL SECTION 23

N.T.S.
5+094.5, LT - 5+105.8, LT
DUCT LENGTH - 11.3m

REPLACEMENT SHEETS
ISSUED 02/24/2012

Stantec

PROJECT NAME: DANVILLE
PROJECT NUMBER: F EGC 028-3(32)

FILE NAME: ...\100 det_duct typical.ptf
DESIGN SUPERVISOR: GARY SANTY
DESIGNED BY: STANTEC
DUCT BANK TYPICAL SECTIONS DB-02

PLOT DATE: 2/24/2012
DRAWN BY: STANTEC
CHECKED BY: STANTEC
SHEET 213A OF 306

2/24/2012 3:4:12 PM V:\1853\active\853030033.0092\Construction\Field Changes\Underground utility relocations\100 det_duct typical.ptf

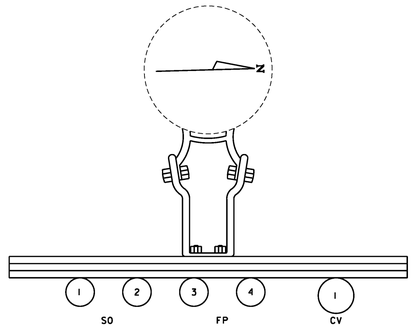

RISER DETAIL
EX UP#1
N.T.S.

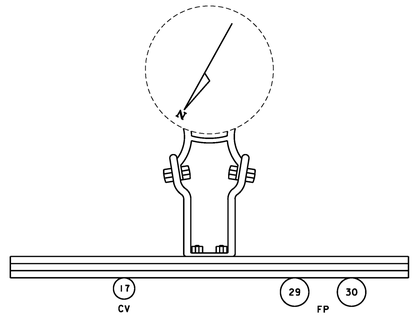

RISER DETAIL
EX UP#2
N.T.S.

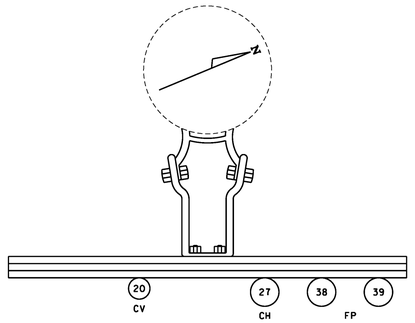

RISER DETAIL
EX UP#3
N.T.S.

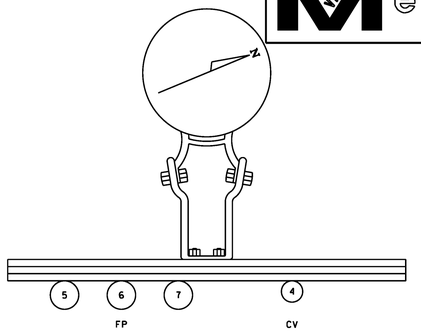

RISER DETAIL
UP#1
N.T.S.

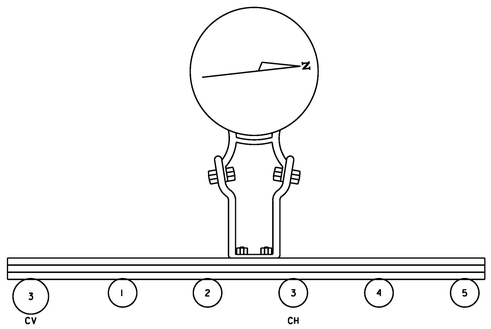

RISER DETAIL
UP#2
N.T.S.

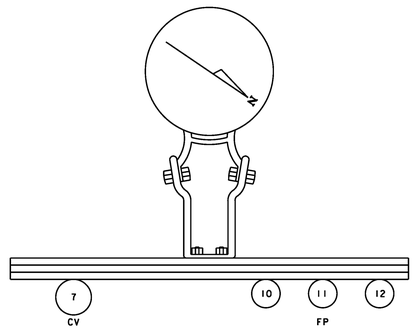

RISER DETAIL
UP#3
N.T.S.

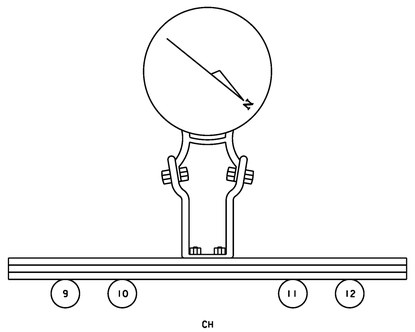

RISER DETAIL
UP#4
N.T.S.

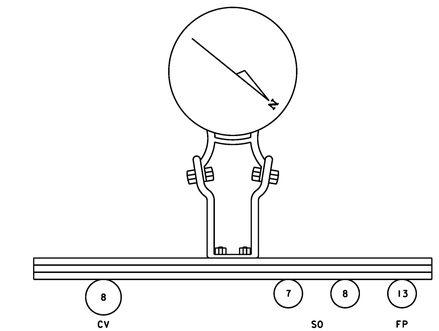

RISER DETAIL
UP#5
N.T.S.

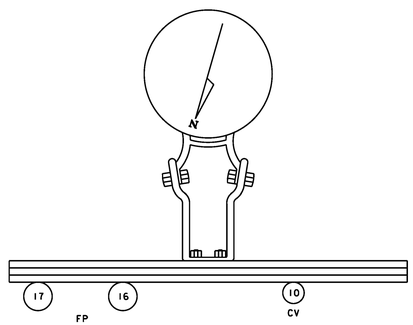

RISER DETAIL
UP#6
N.T.S.

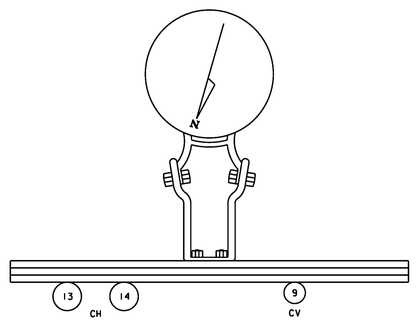

RISER DETAIL
UP#7
N.T.S.

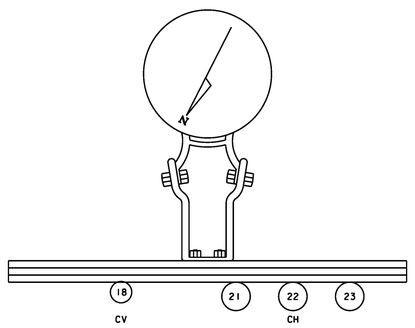

RISER DETAIL
UP#8
N.T.S.

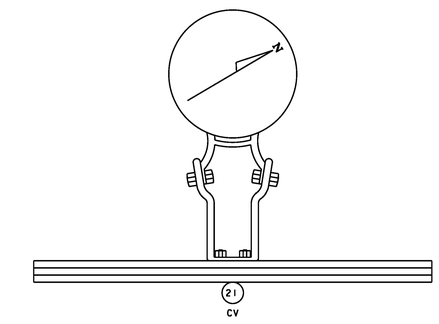

RISER DETAIL
UP#9
N.T.S.

NOTES:
1. THESE RISER DETAILS ARE MEANT FOR INFORMATIONAL PURPOSES ONLY. EACH DETAIL SHALL BE USED TO IDENTIFY THE UTILITY COMPANY, CONDUIT DESIGNATION, CONDUIT SIZE AND NUMBER OF CONDUIT LEADING TO OR COMING FROM EACH POLE. THE EXACT LAYOUT AND LOCATION OF EACH CONDUIT ON THE RISER SHALL BE DECIDED BY EACH UTILITY COMPANY.

REPLACEMENT SHEETS
ISSUED 02/24/2012

Stantec

PROJECT NAME: DANVILLE
PROJECT NUMBER: F EGC 028-3(32)

FILE NAME: ...\100 det_risers.ptf	PLOT DATE: 2/24/2012
DESIGN SUPERVISOR: GARY SANTY	DRAWN BY: STANTEC
DESIGNED BY: STANTEC	CHECKED BY: STANTEC
UTILITY POLE RISER DETAILS RD-01	SHEET 214 OF 306

2/24/2012 3:44:3 PM V:\053\active\195300033.0192\Construction\Field Changes\Underground utility revisions\100 det_risers.ptf

TYPICAL DUCT 1

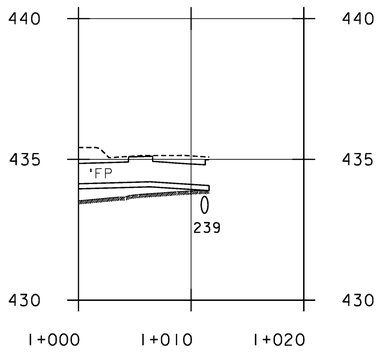

TYPICAL DUCT 2

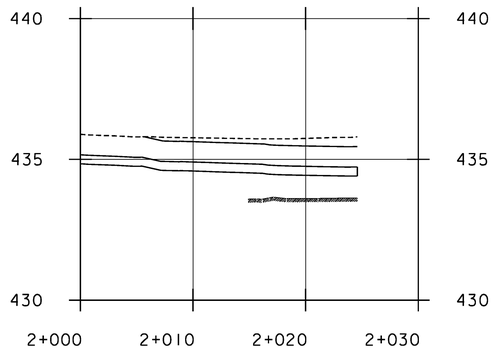

TYPICAL DUCT 3

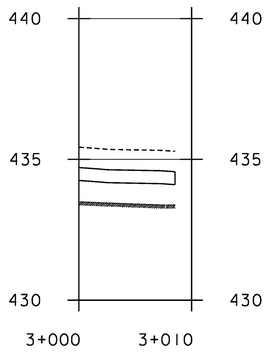

TYPICAL DUCT 4

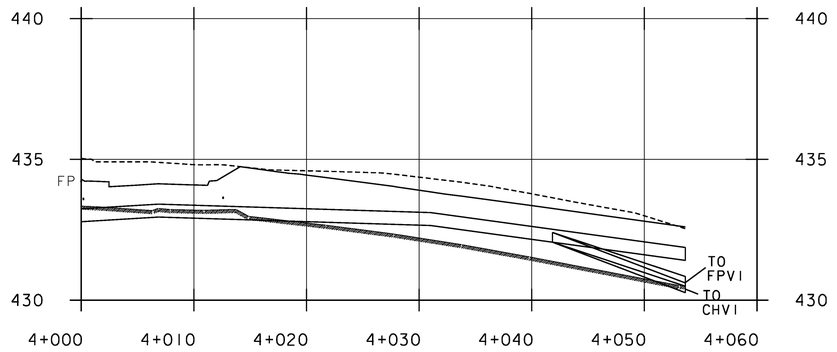

TYPICAL DUCT 5

TYPICAL DUCT 7

TYPICAL DUCT 6

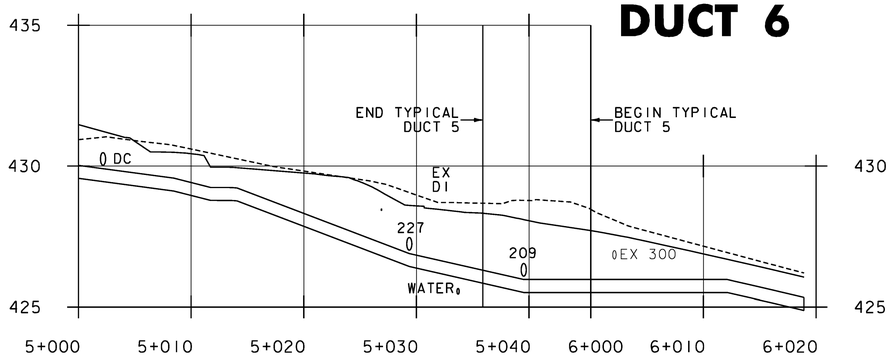

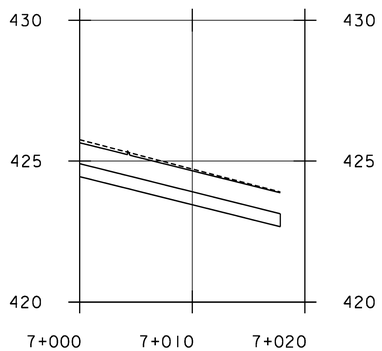

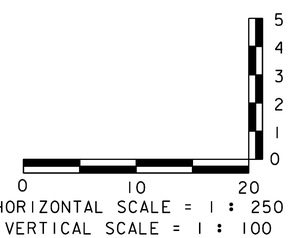

---------- EXISTING GRADE

———— FINISH GRADE

(T) CVPS 3-PHASE

(S) CVPS SINGLE PHASE

NOTE:
BEGIN AND END OF DUCT SHALL CORRESPOND TO DIRECTION OF ARROWHEAD ON UTILITY PLANS.

REPLACEMENT SHEETS ISSUED 02/24/2012

Stantec

PROJECT NAME: DANVILLE	
PROJECT NUMBER: F EGC 028-3(32)	
FILE NAME: ...\100 det_profiles.ptf	PLOT DATE: 2/24/2012
DESIGN SUPERVISOR: GARY SANTY	DRAWN BY: STANTEC
DESIGNED BY: STANTEC	CHECKED BY: STANTEC
DUCT BANK PROFILES DTP-01	SHEET 215 OF 306

2/24/2012 3:44:3 PM V:\1953\active\195300033.0092\Construction\Field Changes\underground utility revisions\100 det_profiles.ptf

TYPICAL DUCT 8

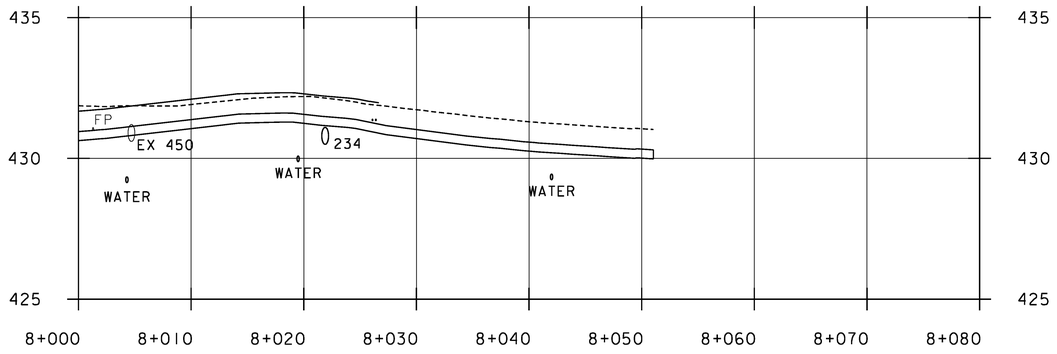

TYPICAL DUCT 9

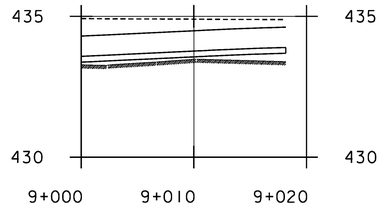

TYPICAL DUCT 10

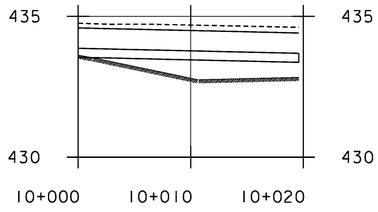

TYPICAL DUCT 11

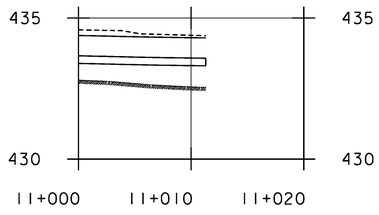

TYPICAL DUCT 12

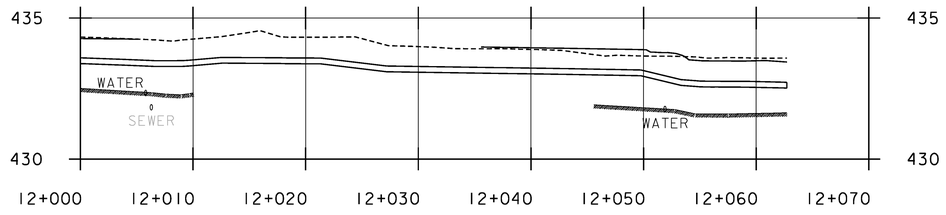

TYPICAL DUCT 13

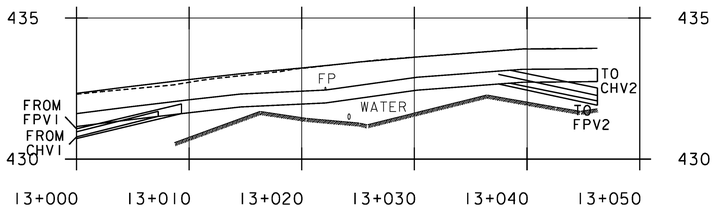

---------- EXISTING GRADE

———— FINISH GRADE

(T) CVPS 3-PHASE

(S) CVPS SINGLE PHASE

NOTE:
BEGIN AND END OF DUCT SHALL CORRESPOND TO DIRECTION OF ARROWHEAD ON UTILITY PLANS.

REPLACEMENT SHEETS ISSUED 02/24/2012

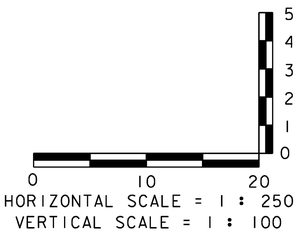

Stantec

PROJECT NAME: DANVILLE	
PROJECT NUMBER: F EGC 028-3(32)	
FILE NAME: ...\100 det_profiles.ptf	PLOT DATE: 2/24/2012
DESIGN SUPERVISOR: GARY SANTY	DRAWN BY: STANTEC
DESIGNED BY: STANTEC	CHECKED BY: STANTEC
DUCT BANK PROFILES DTP-02	SHEET 215A OF 306

2/24/2012 3:44:3 PM V:\1953\active\195300033.0092\Construction\Field Changes\underground utility revisions\100 det_profiles.ptf

TYPICAL DUCT 14

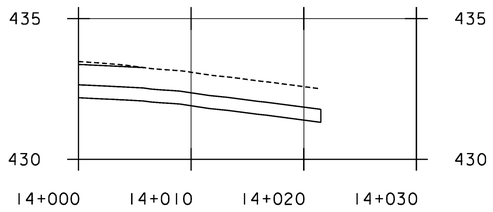

TYPICAL DUCT 15

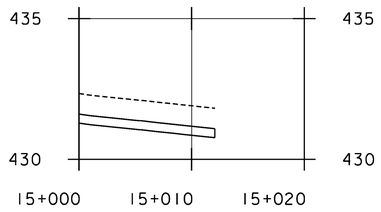

TYPICAL DUCT 16

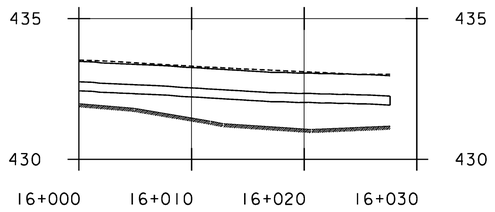

TYPICAL DUCT 17

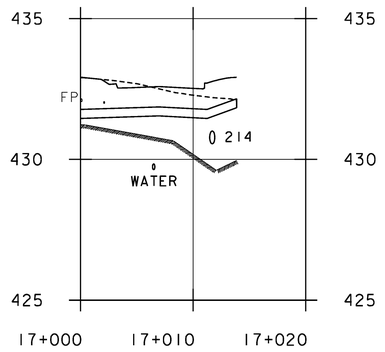

TYPICAL DUCT 18

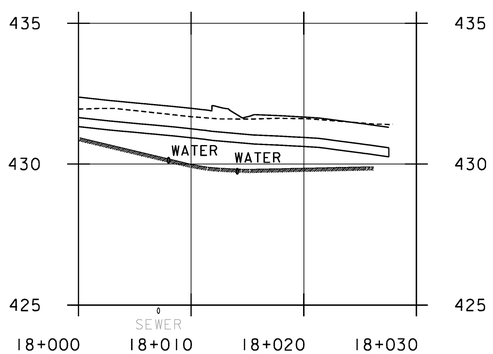

TYPICAL DUCT 19

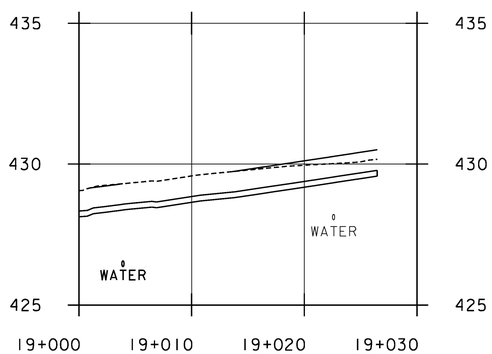

TYPICAL DUCT 20

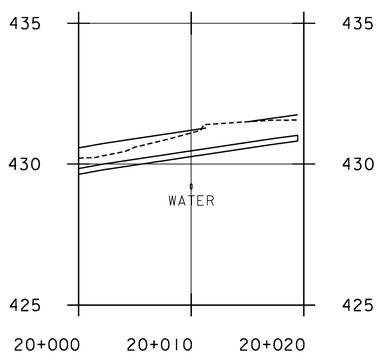

TYPICAL DUCT 21

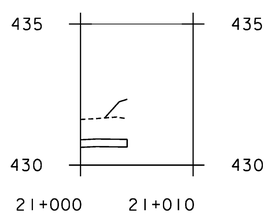

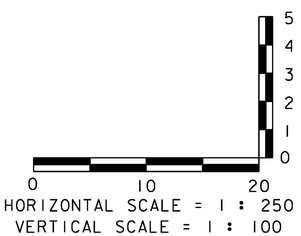

---------- EXISTING GRADE

———— FINISH GRADE

(T) CVPS 3-PHASE

(S) CVPS SINGLE PHASE

NOTE:
BEGIN AND END OF DUCT SHALL CORRESPOND TO DIRECTION OF ARROWHEAD ON UTILITY PLANS.

REPLACEMENT SHEETS ISSUED 02/24/2012

Stantec

PROJECT NAME: DANVILLE	
PROJECT NUMBER: F EGC 028-3(32)	
FILE NAME: ...\100 det_profiles.ptf	PLOT DATE: 2/24/2012
DESIGN SUPERVISOR: GARY SANTY	DRAWN BY: STANTEC
DESIGNED BY: STANTEC	CHECKED BY: STANTEC
DUCT BANK PROFILES DTP-03	SHEET 215B OF 306

2/24/2012 3:44:4 PM V:\1953\active\195300033.0092\Construction\Field Changes\underground utility revisions\100 det_profiles.ptf

TYPICAL DUCT 22

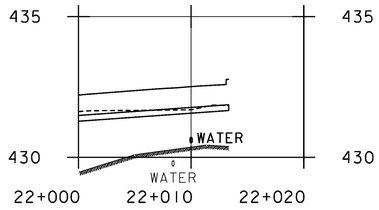

TYPICAL DUCT 23

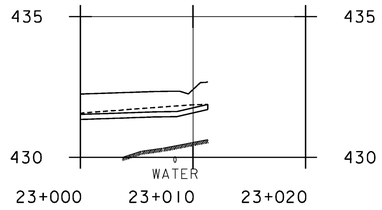

NOTE:
BEGIN AND END OF DUCT SHALL CORRESPOND TO DIRECTION OF ARROWHEAD ON UTILITY PLANS.

FAIRPOINT & SOVERNET BETWEEN DUCTS TD2 & TD3

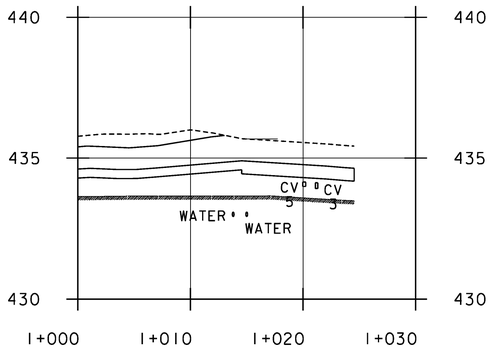

CHARTER BETWEEN DUCTS TD1 & TD3

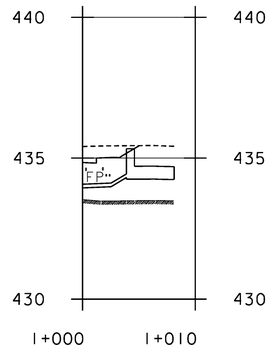

CVPS (T) BETWEEN DUCTS TD2 & TD3

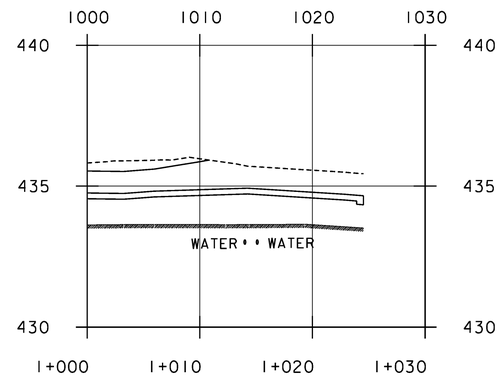

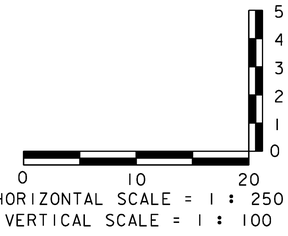

HORIZONTAL SCALE = 1 : 250
VERTICAL SCALE = 1 : 100

---------- EXISTING GRADE
———— FINISH GRADE
(T) CVPS 3-PHASE
(S) CVPS SINGLE PHASE

REPLACEMENT SHEETS ISSUED 02/24/2012

INTERSECTION 1 BETWEEN DUCTS 1&3,2&3

Stantec

PROJECT NAME:	DANVILLE
PROJECT NUMBER:	F EGC 028-3(32)
FILE NAME: ...\100 det_profiles.ptf	PLOT DATE: 2/24/2012
DESIGN SUPERVISOR: GARY SANTY	DRAWN BY: STANTEC
DESIGNED BY: STANTEC	CHECKED BY: STANTEC
DUCT BANK PROFILES DTP-04	SHEET 215C OF 306

2/24/2012 3:44:4 PM V:\1953\active\95330033.3092\Construction\Field Changes\underground utility revisions\100 det_profiles.ptf

Metric

CHARTER, FAIRPOINT&SOVERNET BETWEEN DUCTS TD3 & TD4

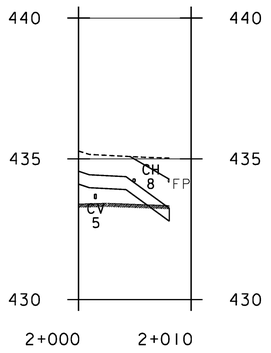

CVPS (T) BETWEEN DUCTS TD3 & TD4

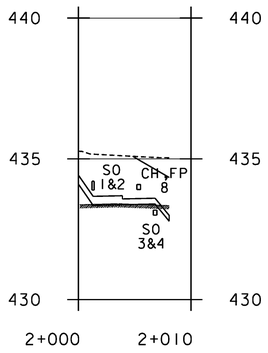

SOVERNET BETWEEN DUCTS TD3 & TD4

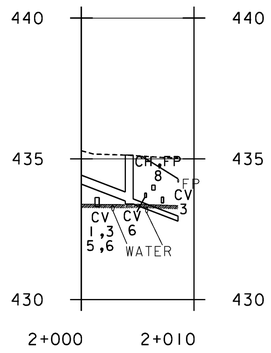

CHARTER& FAIRPOINT BETWEEN DUCTS TD3 & TD9

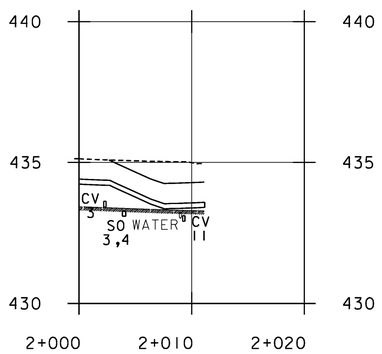

CVPS (T) BETWEEN DUCTS TD3 & TD9

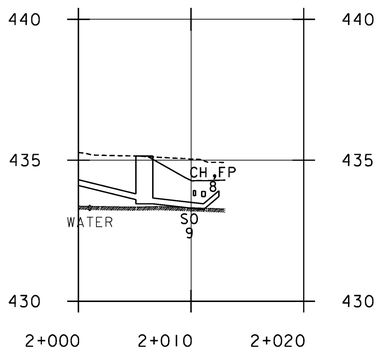

SOVERNET BETWEEN DUCTS TD3 & TD9

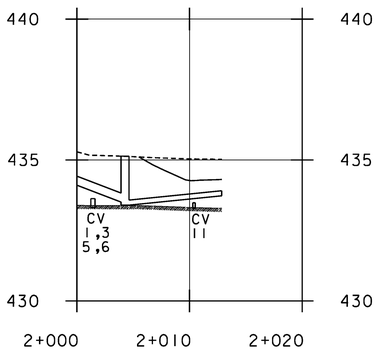

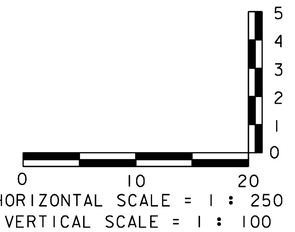

---------- EXISTING GRADE

———— FINISH GRADE

(T) CVPS 3-PHASE

(S) CVPS SINGLE PHASE

REPLACEMENT SHEETS ISSUED 02/24/2012

INTERSECTION 2 BETWEEN DUCTS 3&4,3&9

Stantec

PROJECT NAME: DANVILLE	
PROJECT NUMBER: F EGC 028-3(32)	
FILE NAME: ...\100 det_profiles.ptf	PLOT DATE: 2/24/2012
DESIGN SUPERVISOR: GARY SANTY	DRAWN BY: STANTEC
DESIGNED BY: STANTEC	CHECKED BY: STANTEC
DUCT BANK PROFILES DTP-05	SHEET 215D OF 306

2/24/2012 3:44:5 PM V:\1953\active\195300033.0192\Construction\Field Changes\underground utility revisions\100 det_profiles.ptf

VDOT Metric

CHARTER BETWEEN DUCTS TD4 & TD5

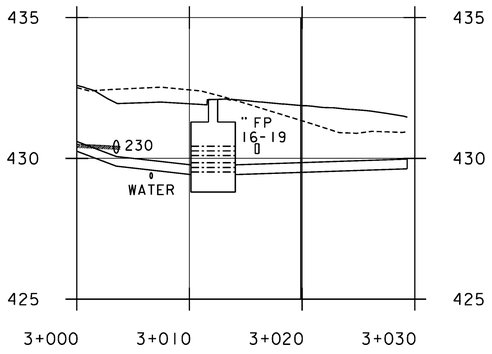

CHARTER BETWEEN DUCTS TD8 & TD13

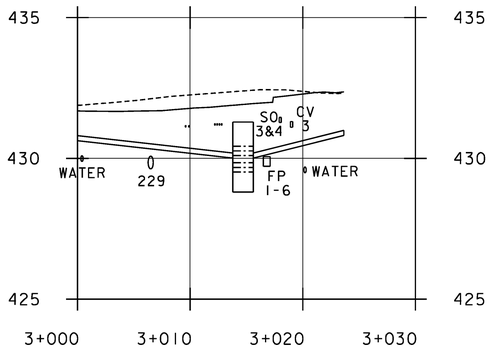

FAIRPOINT BETWEEN DUCTS TD4 & TD5

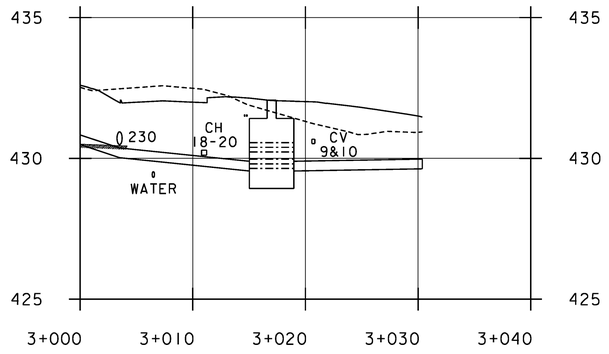

FAIRPOINT BETWEEN DUCTS TD8 & TD13

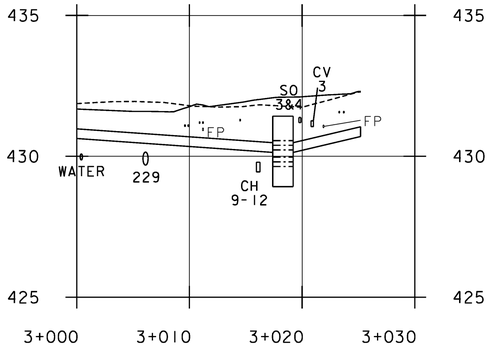

CVPS (T) BETWEEN DUCTS TD4 & TD5

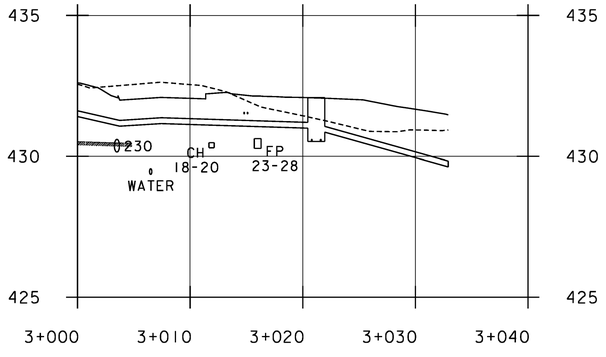

CVPS (S) BETWEEN DUCTS TD8 & TC2

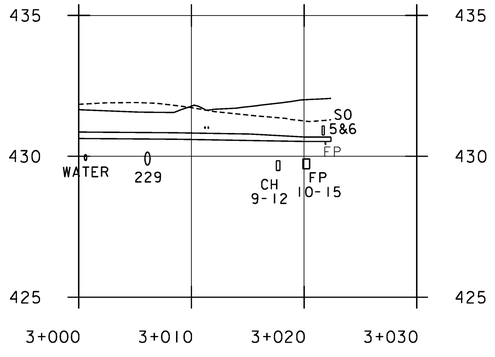

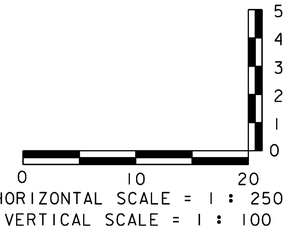

---------- EXISTING GRADE

———— FINISH GRADE

(T) CVPS 3-PHASE

(S) CVPS SINGLE PHASE

REPLACEMENT SHEETS ISSUED 02/24/2012

INTERSECTION 3 BETWEEN DUCTS 4&5,8&13

Stantec

PROJECT NAME: DANVILLE	
PROJECT NUMBER: F EGC 028-3(32)	
FILE NAME: ...\100 det_profiles.ptf	PLOT DATE: 2/24/2012
DESIGN SUPERVISOR: GARY SANTY	DRAWN BY: STANTEC
DESIGNED BY: STANTEC	CHECKED BY: STANTEC
DUCT BANK PROFILES DTP-06	SHEET 215E OF 306

2/24/2012 3:44:15 PM V:\1953\active\195300033.0192\Construction\Field Changes\underground utility revisions\100 det_profiles.ptf

SOVERNET BETWEEN DUCTS TD4 & TD5

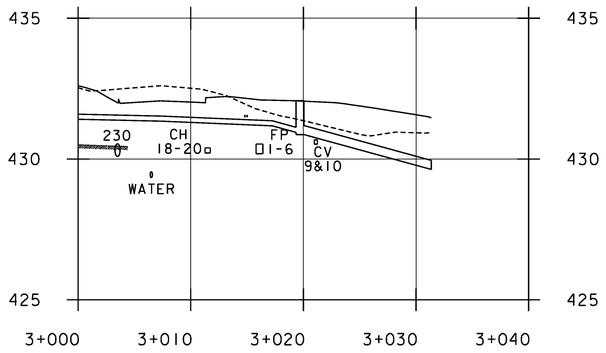

CHARTER BETWEEN DUCTS TD13 & TD14

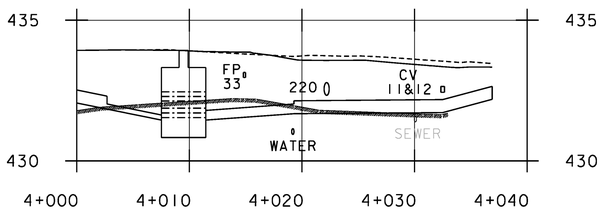

FAIRPOINT BETWEEN DUCTS TD13 & TD14

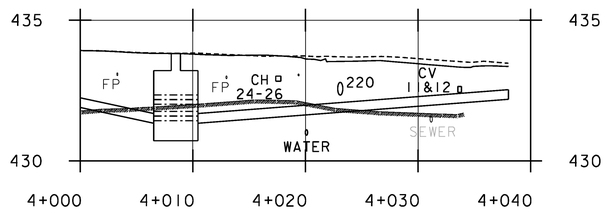

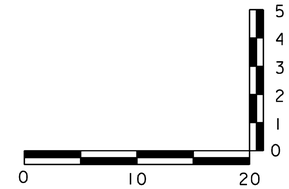

---------- EXISTING GRADE

———— FINISH GRADE

(T) CVPS 3-PHASE

(S) CVPS SINGLE PHASE

REPLACEMENT SHEETS ISSUED 02/24/2012

INTERSECTION 4 BETWEEN DUCTS 13&14

Stantec

PROJECT NAME: DANVILLE	
PROJECT NUMBER: F EGC 028-3(32)	
FILE NAME: ...\100 det_profiles.ptf	PLOT DATE: 2/24/2012
DESIGN SUPERVISOR: GARY SANTY	DRAWN BY: STANTEC
DESIGNED BY: STANTEC	CHECKED BY: STANTEC
DUCT BANK PROFILES DTP-07	SHEET 215F OF 306

2/24/2012 3:44:15 PM V:\1953\active\195310033.0192\Construction\Field Changes\underground utility revisions\100 det_profiles.ptf

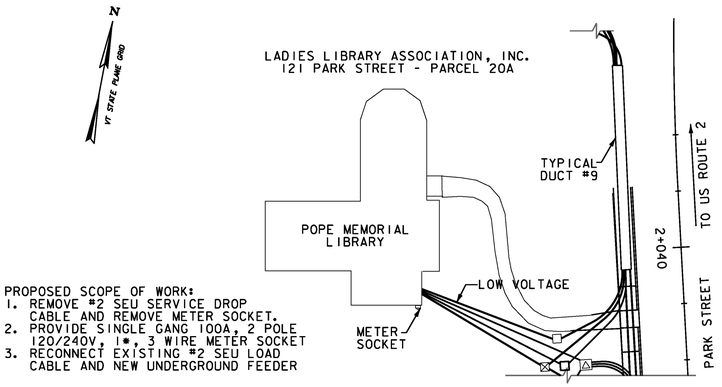

POPE MEMORIAL LIBRARY SITE PLAN – ROUTE 2
N.T.S.

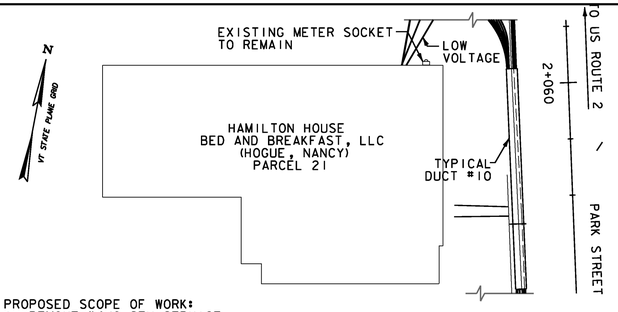

101 PARK STREET SITE PLAN – ROUTE 2
N.T.S.

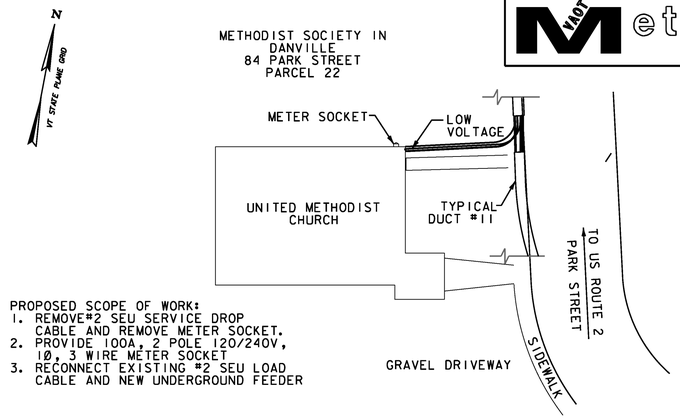

UNITED METHODIST CHURCH SITE PLAN – PARK ST.
N.T.S.

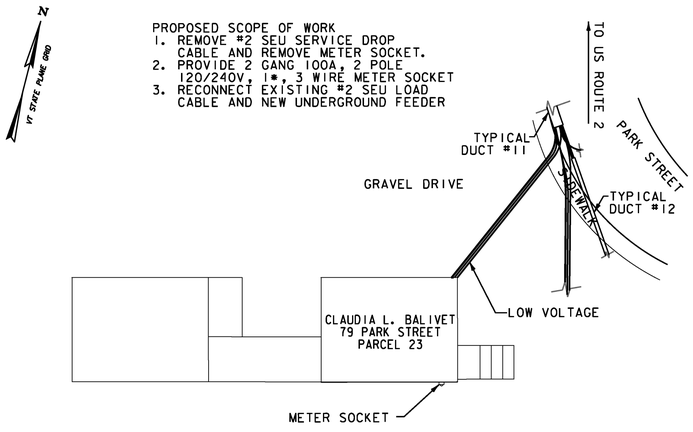

BALIVET RESIDENTIAL SITE PLAN – PARK ST.
N.T.S.

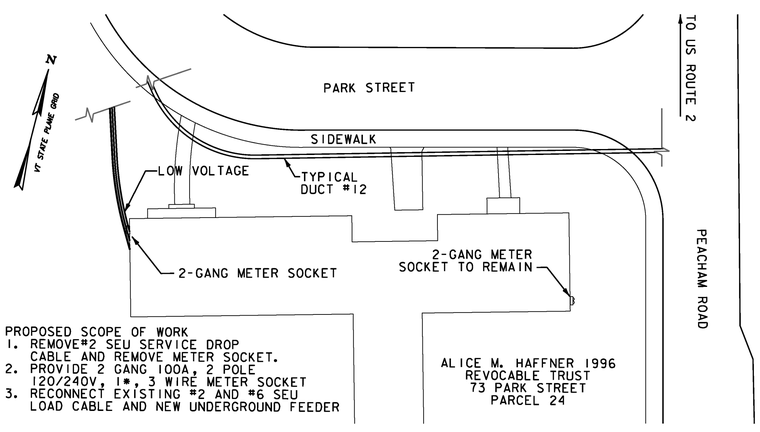

HAFFNER RESIDENCE/OFFICES SITE PLAN – PARK ST.
N.T.S.

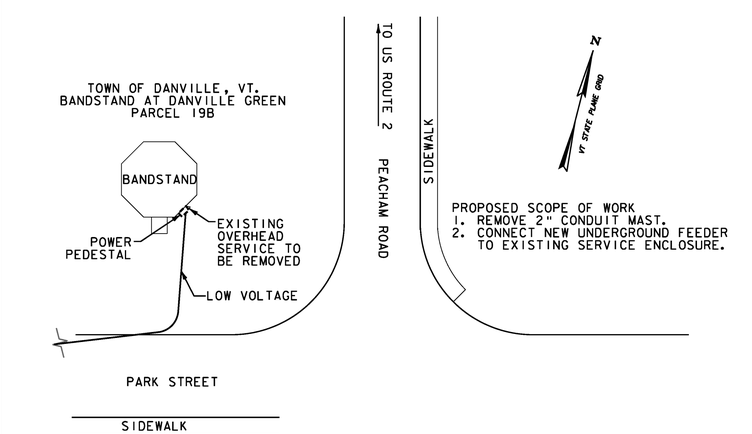

DANVILLE GREEN SITE PLAN
N.T.S.

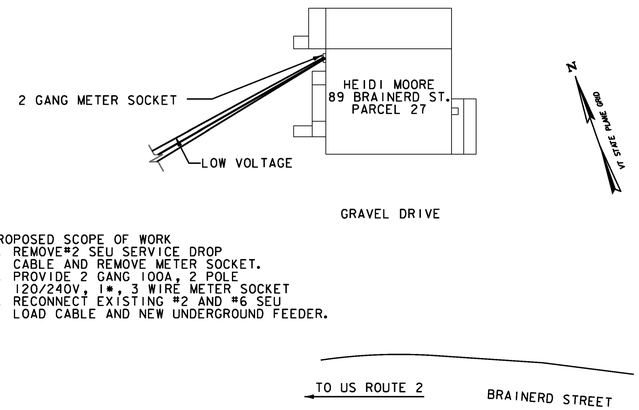

MOORE RESIDENCE SITE PLAN – BRAINERD ST.
N.T.S.

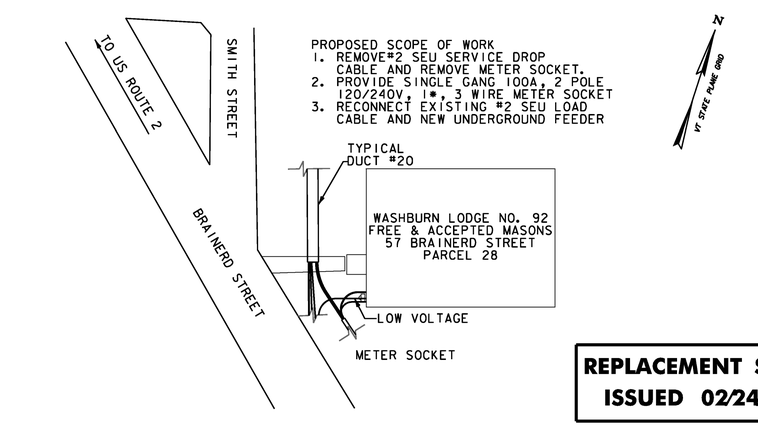

MASON LODGE SITE PLAN – BRAINERD ST.
N.T.S.

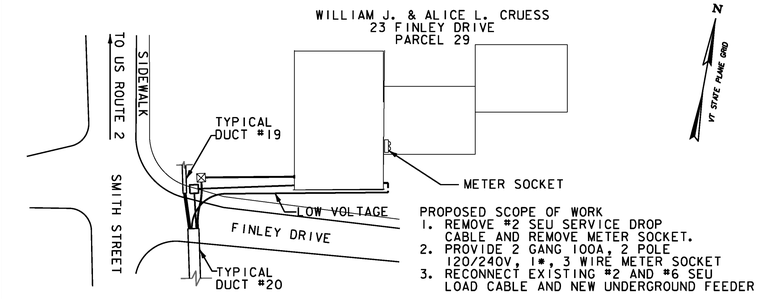

CRUESS RESIDENCE SITE PLAN – FINLEY DR.
N.T.S.

REPLACEMENT SHEETS ISSUED 02/24/2012

Stantec

PROJECT NAME: DANVILLE	
PROJECT NUMBER: F EGC 028-3(32)	
FILE NAME: ...\100 det_utl12.ptf	PLOT DATE: 2/24/2012
DESIGN SUPERVISOR: GARY SANTY	DRAWN BY: STANTEC
DESIGNED BY: STANTEC	CHECKED BY: STANTEC
UTILITIES DETAILS UD-1	SHEET 215G OF 306

2/24/2012 4:06:49 PM V:\953\active\95350033_0182\Construction\Field Changes\underground utility revisions\100 det_utl12.ptf

PROPOSED SCOPE OF WORK
1. REMOVE 2" CONDUIT AND CONDUCTORS FOR SERVICE DROP TO RESIDENCE.
2. RECONNECT EXISTING 4 GANG METER/CIRCUIT BREAKER ENCLOSURE AND NEW UNDERGROUND FEEDER.

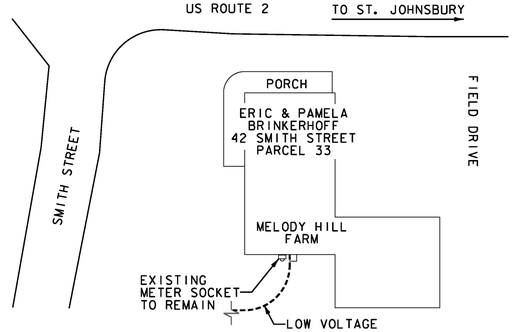

BRINKERHOFF RESIDENCE SITE PLAN – RT2/SMITH ST
N.T.S.

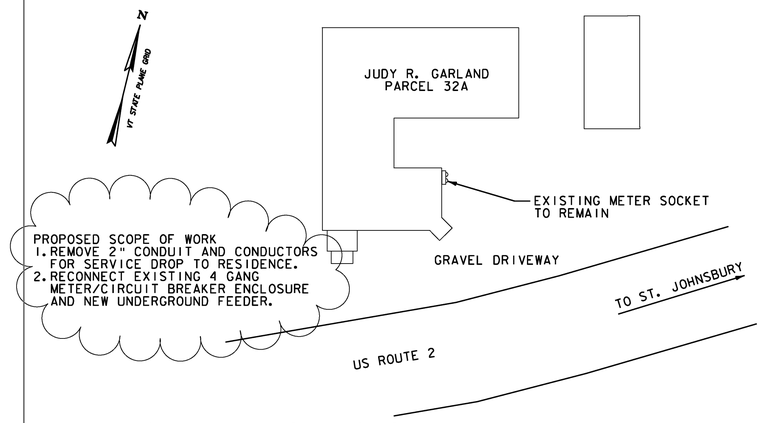

GARLAND RESIDENCE SITE PLAN – ROUTE 2
N.T.S.

PROPOSED SCOPE OF WORK
1. REMOVE #4/0 SEU SERVICE DROP CABLE.
2. RECONNECT NEW UNDERGROUND FEEDER TO EXISTING 200A METER SOCKET.

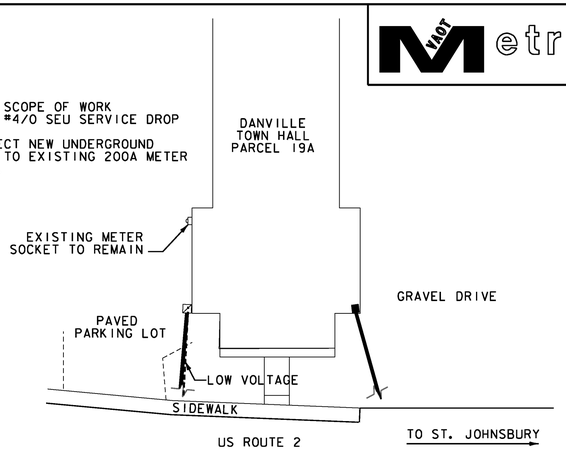

TOWN HALL SITE PLAN – ROUTE 2
N.T.S.

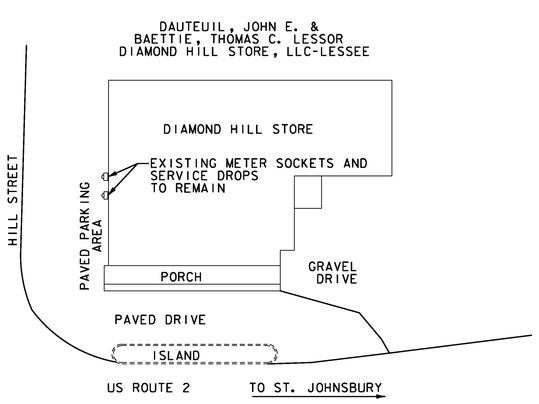

DIAMOND HILL STORE SITE PLAN – ROUTE 2
N.T.S.

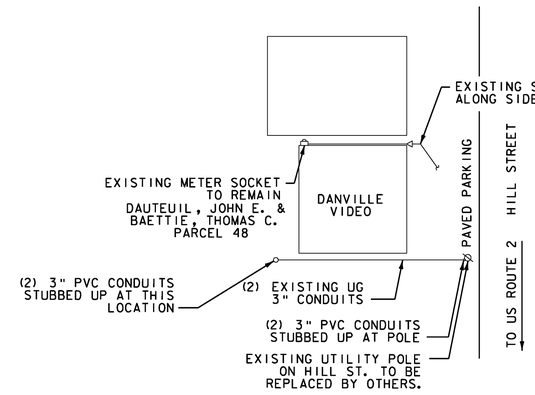

VIDEO STORE SITE PLAN – HILL ST.
N.T.S.

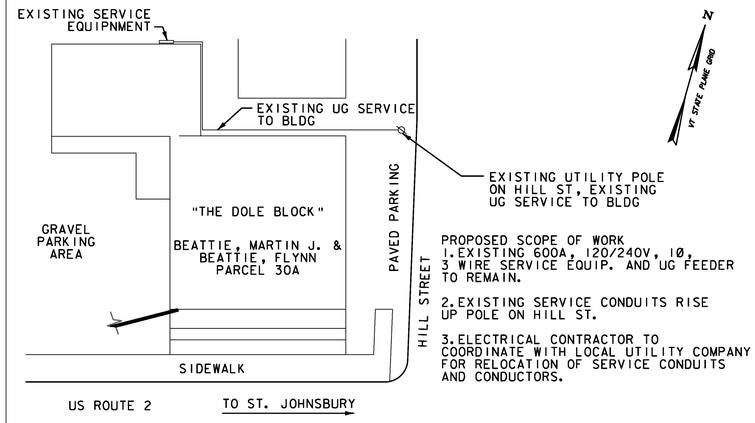

PROPOSED SCOPE OF WORK
1. EXISTING 600A, 120/240V, 1Ø, 3 WIRE SERVICE EQUIP. AND UG FEEDER TO REMAIN.
2. EXISTING SERVICE CONDUITS RISE UP POLE ON HILL ST.
3. ELECTRICAL CONTRACTOR TO COORDINATE WITH LOCAL UTILITY COMPANY FOR RELOCATION OF SERVICE CONDUITS AND CONDUCTORS.

THE DOLE BLOCK SITE PLAN CORNER OF ROUTE 2 & HILL ST.
N.T.S.

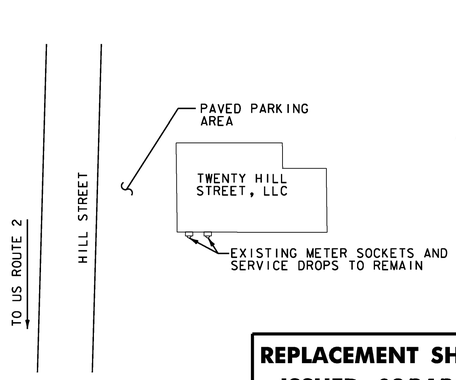

REPLACEMENT SHEETS ISSUED 02/24/2012

20 HILL STREET SITE PLAN – HILL ST.
N.T.S.

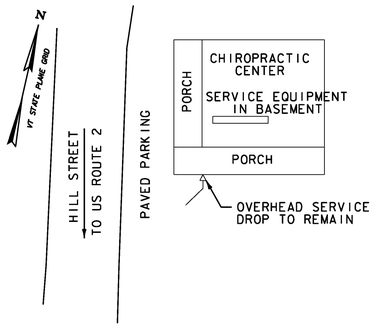

PROPOSED SCOPE OF WORK
1. REMOVE 2" RIGID CONDUIT AND CONDUCTORS FOR SERVICE ENTRANCE. PROVIDE A FIVE GANG, 200 AMP, 120/240V, 1Ø A2 3 WIRE METER SOCKET WITH THREE 100A MAIN BREAKERS AND TWO 60A, 2 POLE MAIN BREAKERS.
2. PROVIDE THREE #2 SER CABLES FROM THE MAIN BREAKERS TO THE TWO 100A PANELS AND ONE 100A DISCONNECT IN BASEMENT. REMOVE NEUTRAL/GROUND BOND IN PANELS/DISCONNECT AND SEPARATE NEUTRALS AND EQUIPMENT GROUNDS. PROVIDE SEPARATE GROUND BAR FOR EQUIPMENT GROUNDS.
3. PROVIDE TWO #6 SER CABLES FROM THE 60A BREAKERS TO THE TWO 60A DISCONNECTS IN BASEMENT. SEPARATE NEUTRAL/GROUNDS AS DESCRIBED ABOVE.
5. REMOVE GROUNDING ELECTRODE CONDUCTOR FROM EXISTING SERVICE EQUIPMENT.
6. PROVIDE NEW WATER SYSTEM GROUND AND GROUND RODS FOR NEW SERVICE EQUIPMENT.

CHIROPRACTIC CENTER SITE PLAN – HILL ST.
N.T.S.

PROPOSED SCOPE OF WORK
1. REMOVE #2 SEU SERVICE ENTRANCE CABLE AND SERVICE ENTRANCE EQUIPMENT AT SECOND LEVEL EXTERIOR STAIRWAY.
2. REMOVE GROUNDING ELECTRODE CONDUCTOR FROM EXISTING SERVICE EQUIPMENT.
3. REMOVE 100A LOAD CENTER AT FIRST LEVEL.
4. PROVIDE NEW 100 AMP, 120/240V, 1Ø, 3 WIRE , 30 CKT. LOAD CENTER AT FIRST LEVEL.
5. EXTEND THE FOUR 20A, 120V CIRCUITS FROM THE EXISTING SERVICE ENTRANCE LOCATION TO THE NEW LOAD CENTER.
6. PROVIDE A GROUNDING ELECTRODE SYSTEM UTILIZING WATER PIPE AND GROUND RODS, GROUND AT NEW LOAD CENTER.

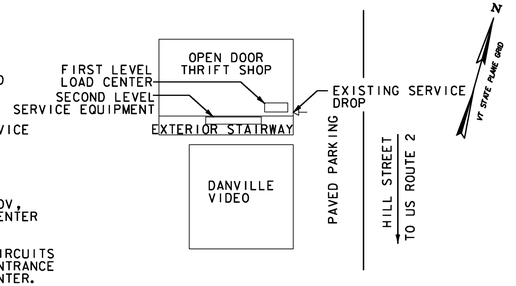

THRIFT STORE SITE PLAN – HILL ST.
N.T.S.

PROJECT NAME:	DANVILLE
PROJECT NUMBER:	F EGC 028-3(32)
FILE NAME: ...\100 det_utl13.ptf	PLOT DATE: 2/24/2012
DESIGN SUPERVISOR: GARY SANTY	DRAWN BY: STANTEC
DESIGNED BY: STANTEC	CHECKED BY: STANTEC
UTILITIES DETAILS UD-2	SHEET 215H OF 306

Stantec

2/24/2012 4:06:50 PM \\1953\active\195300033_0192\Construction\Field Changes\underground utility revisions\100 det_utl13.ptf

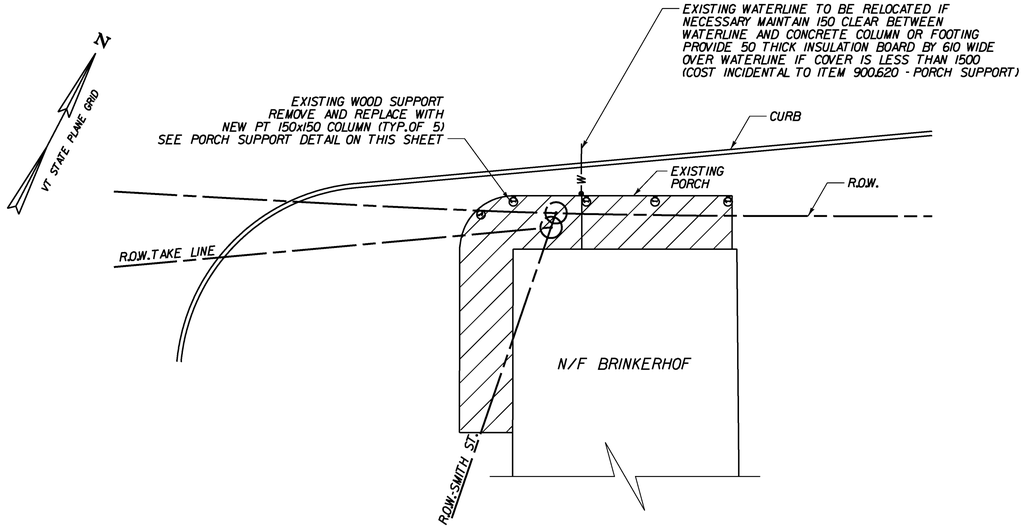

PORCH PLAN STA. 19+240, RT.

SCALE 1:100

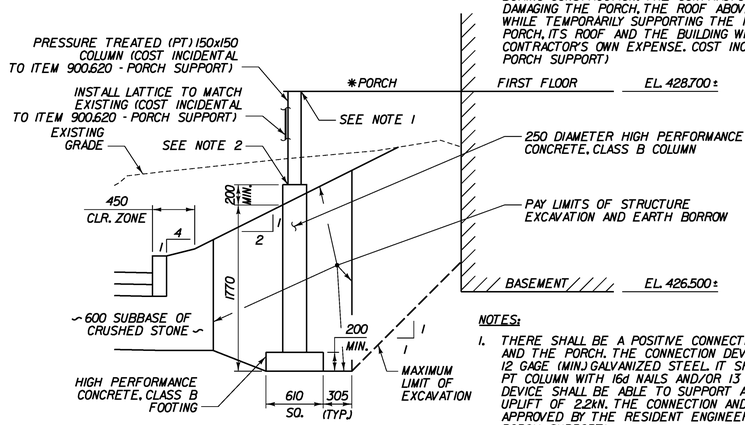

* THE CONTRACTOR SHALL PROVIDE TEMPORARY SUPPORT OF THE PORCH DURING CONSTRUCTION. THE CONTRACTOR SHALL TAKE CARE TO AVOID DAMAGING THE PORCH, THE ROOF ABOVE THE PORCH AND THE BUILDING WHILE TEMPORARILY SUPPORTING THE PORCH. ANY DAMAGE TO THE PORCH, ITS ROOF AND THE BUILDING WILL BE REPAIRED AT THE CONTRACTOR'S OWN EXPENSE. COST INCIDENTAL TO ITEM 900.620 - PORCH SUPPORT)

PORCH SUPPORT DETAIL

SCALE 1:30

NOTES:

1. THERE SHALL BE A POSITIVE CONNECTION BETWEEN THE PT 150x150 COLUMN AND THE PORCH. THE CONNECTION DEVICE SHALL BE CONSTRUCTED OF 12 GAGE (MIN.) GALVANIZED STEEL. IT SHALL CONNECT THE PORCH AND THE PT COLUMN WITH 16d NAILS AND/OR 13 DIA. LAG BOLTS. THE CONNECTION DEVICE SHALL BE ABLE TO SUPPORT AN ALLOWABLE LOAD OF 22kN AND A UPLIFT OF 2.2kN. THE CONNECTION AND CONNECTING DEVICE SHALL BE APPROVED BY THE RESIDENT ENGINEER (COST INCIDENTAL TO ITEM 900.620- PORCH SUPPORT)
2. THERE SHALL BE A POSITIVE CONNECTION BETWEEN THE PT 150x150 COLUMN AND THE 250 DIA. CONCRETE COLUMN. THE CONNECTION DEVICE SHALL BE ADJUSTABLE HORIZONTALLY AND CONSTRUCTED OF 12 GAGE (MIN.) GALVANIZED STEEL. IT SHALL CONNECT TO THE PT COLUMN WITH 16d NAILS AND CONNECT TO THE CONCRETE COLUMN WITH A 16 DIA. A370M ANCHOR BOLT WITH 150 OF EMBEDMENT. THE CONNECTION DEVICE SHALL BE ABLE TO SUPPORT AN ALLOWABLE LOAD OF 22kN AND A UPLIFT OF 2.2kN (COST INCIDENTAL TO ITEM 900.620 - PORCH SUPPORT).
3. THE CONTRACTOR SHALL TAKE CARE TO AVOID UNDERMINING OR DAMAGING THE EXISTING FOUNDATION WHILE EXCAVATING FOR THE CONCRETE FOOTING. ANY DAMAGE TO THE EXISTING FOUNDATION, PORCH OR BUILDING WILL BE REPAIRED AT THE CONTRACTOR'S OWN EXPENSE.

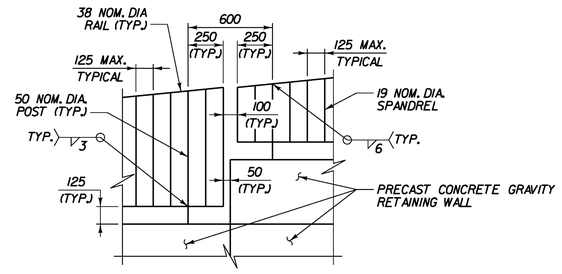

RAIL DETAIL

SCALE 1:20

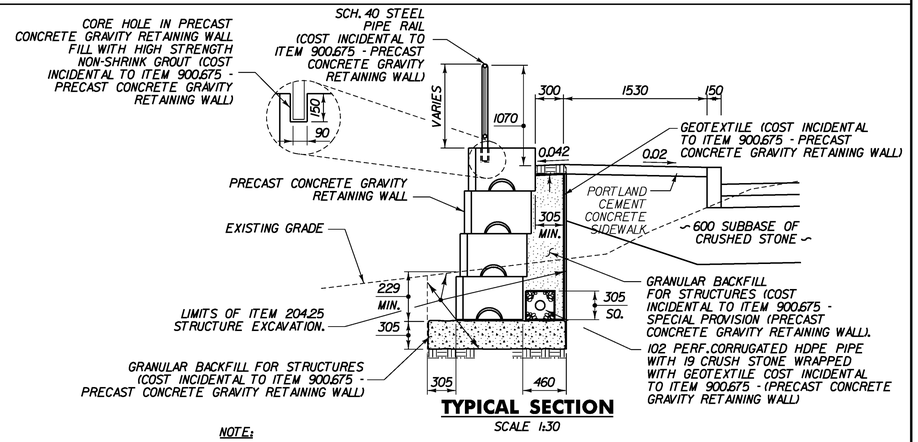

TYPICAL SECTION

SCALE 1:30

NOTE:

1. AFTER THE WALL IS ERECTED AND THE RAILING IS IN PLACE, CLEAN THE FACE AND TOP OF THE RETAINING WALL WITH A BRUSH, THEN APPLY TWO COATS OF SILANE WATER REPELLENT. COST INCIDENTAL TO ITEM 900.675 - (PRECAST CONCRETE GRAVITY RETAINING WALL).
2. COST OF RAILING INCLUDING MATERIAL AND INSTALLATION SHALL BE INCIDENTAL TO ITEM 900.675 - (PRECAST CONCRETE GRAVITY RETAINING WALL).
3. ALL RAILS, POSTS AND SPANDRELS SHALL BE ASTM A53, TYPE E. ALL RAILS, POSTS AND SPANDRELS SHALL BE PAINTED BLACK. COST INCIDENTAL TO ITEM 900.675 - (PRECAST CONCRETE GRAVITY RETAINING WALL).
4. PRECAST CONCRETE GRAVITY RETAINING WALL SHALL BE ABLE TO RESIST A 2 kN HORIZONTAL LOAD AT THE BASE OF THE RAILING POST.
5. TIE RETAINING WALL DRAINAGE PIPE TO DRAIN INTO U207.
6. HDPE PIPE TO CONNECT TO U207 (SEE CP-7). CONNECTION PAID INCIDENTAL TO ITEM 900.675 (PRECAST CONCRETE GRAVITY RETAINING WALL).
7. GEOTECHNICAL INVESTIGATION NECESSARY FOR DESIGN OF THE WALL SHALL BE THE RESPONSIBILITY OF THE CONTRACTOR. COST INCIDENTAL TO ITEM 900.675 (PRECAST CONCRETE GRAVITY RETAINING WALL).

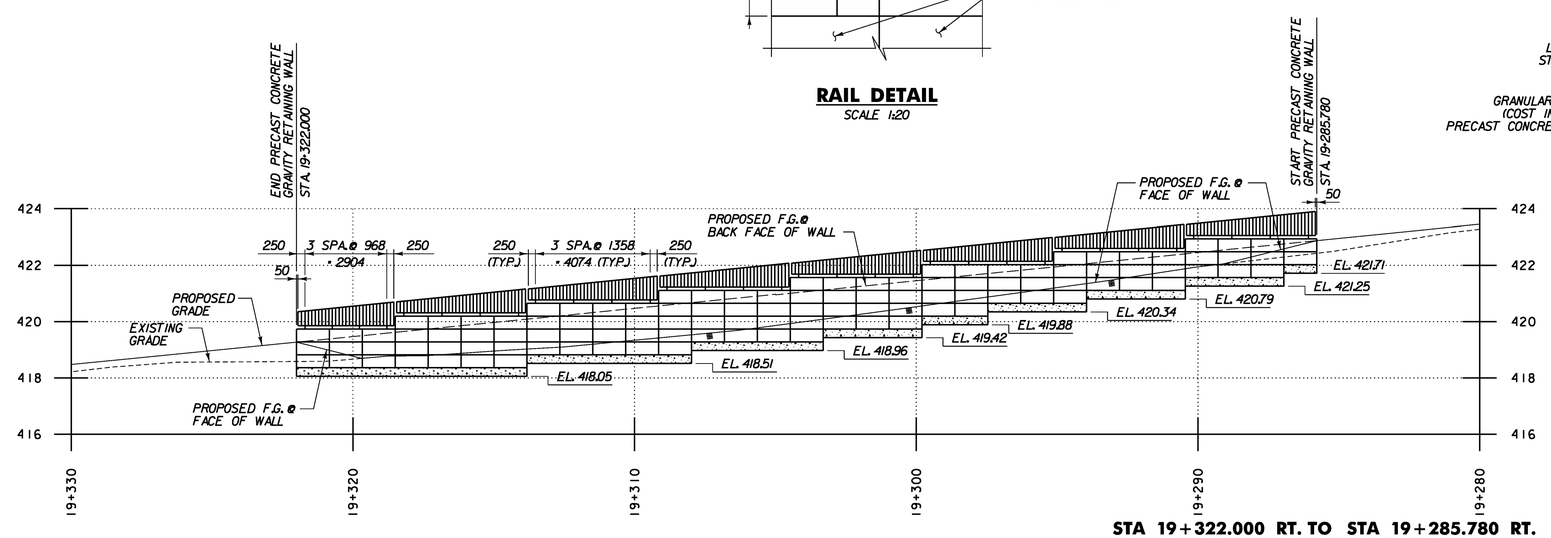

STA 19+322.000 RT. TO STA 19+285.780 RT.

PRECAST CONCRETE GRAVITY RETAINING WALL ELEVATION

SCALE 1:100

Stantec

PROJECT NAME:	DANVILLE
PROJECT NUMBER:	F EGC 028-3(32)
FILE NAME: ...\PlotFiles\099 retwall.ptf	PLOT DATE: 1/18/2011
DESIGN SUPERVISOR: GARY SANTY	DRAWN BY: STANTEC
DESIGNED BY: STANTEC	CHECKED BY: STANTEC
STRUCTURAL DETAILS SD-1	SHEET 216 OF 306

1/18/2011 11:54:49 PM v:\1953\active\95330033_1092\highway\PlotFiles\099 retwall.ptf

VAOT Metric

CONSTRUCTION SEQUENCE

THE PROPOSED CONSTRUCTION SEQUENCE FOR THE PROJECT ANTICIPATES THAT CONSTRUCTION WILL BE SUBSTANTIALLY COMPLETE WITHIN TWO CONSTRUCTION SEASONS WITH THE PLANTING OF TREES AND SHRUBS IN THE SPRING OF THE THIRD CONSTRUCTION SEASON. THE SEQUENCE LISTED BELOW IS INTENDED AS A GUIDELINE. THE CONTRACTOR SHALL SUBMIT A DETAILED PLAN TO THE RESIDENT ENGINEER FOR APPROVAL BEFORE COMMENCING WORK.

DURING STAGED CONSTRUCTION OF MAIN STREET, THE CONTRACTOR SHALL MINIMIZE THE LENGTH OF ONE-LANE TRAVEL AND TRAVEL ON SUBBASE, THEREFORE, THE CONTRACTOR SHALL DIVIDE THE PROJECT INTO SECTIONS. ONE-LANE TRAVEL SHALL NOT EXCEED 150 METERS. THE CONTRACTOR MAY WORK IN TWO NON-ADJACENT SECTIONS SIMULTANEOUSLY; HOWEVER, PAVEMENT SHALL BE COMPLETED TO THE BINDER COURSE BEFORE MOVING TO A THIRD SECTION. THE FOLLOWING LIMITS ARE SUGGESTED FOR PROJECT SECTIONS.

SECTION 1 STATION 18+507.73 TO STATION 18+840
SECTION 2 STATION 18+840 TO STATION 19+040
SECTION 3 STATION 19+040 TO STATION 19+240
SECTION 4 STATION 19+240 TO STATION 19+470
SECTION 5 STATION 19+470 TO STATION 19+910

CONTRACTOR TO ENSURE THAT ALL EXCAVATIONS ARE ADEQUATELY SECURED TO PROVIDE AND PROTECT THE SAFETY OF THE TRAVELING PUBLIC AND OPENED TO TRAFFIC AT THE END OF EACH WORKDAY. MAXIMUM TRAVEL TIME ON GRAVEL SURFACES INCLUDING TRENCH CUTS SHALL BE 24 HOURS, UNLESS OTHERWISE APPROVED BY THE RESIDENT ENGINEER. ALL WORK AND MATERIALS SHALL BE INCLUDED IN THE UNIT PRICE BID FOR ITEM 641.10 TRAFFIC CONTROL.

YEAR 1

STAGE 1: VILLAGE GREEN AND MAIN STREET UTILITY CONSTRUCTION

RECONSTRUCT THE STREETS BORDERING THE GREEN, INCLUDING PARK ST, PEACHAM RD, BRAINERD ST, AND SMITH ST. THE STREETS SHALL BE CLOSED AND RECONSTRUCTED ONE STREET AT A TIME TO THE BINDER COURSE. THE LIMITS OF RECONSTRUCTION ARE SHOWN ON SHEET TC-5. LOCAL TRAFFIC ACCESS SHALL BE MAINTAINED DURING RECONSTRUCTION. BRAINERD STREET SHALL REMAIN OPEN TO TRAFFIC DURING THE RECONSTRUCTION OF PARK STREET AND PEACHAM ROAD. BRAINERD STREET SHALL BE CLOSED AND REMOVED DURING THE RECONSTRUCTION OF SMITH STREET.

UNDERGROUND UTILITY RELOCATION ON MAIN STREET WILL TAKE PLACE DURING THIS STAGE.

CONSTRUCTION OF SECTION 5 ON MAIN STREET WILL BE PERMITTED IN THE FIRST YEAR, ACCORDING TO THE CONSTRUCTION SEQUENCE FOR STAGE 2 AND STAGE 3.

YEAR 2

STAGE 2: SOUTH SIDE CONSTRUCTION

CONSTRUCT TEMPORARY WIDENING WHERE NECESSARY ON THE NORTH SIDE OF MAIN STREET AS SHOWN ON TYPICAL SECTION (STAGE 2) ON SHEET TC-2. RECONSTRUCT THE SOUTH SIDE (EASTBOUND LANE) OF MAIN STREET AS SHOWN ON THE PLANS AND TYPICAL SECTION. FLAGGERS SHALL BE USED TO MAINTAIN ONE-LANE TRAFFIC CONTROL IN THE WORK ZONE DURING THE DAY. IN THE EVENING, EASTBOUND TRAFFIC WILL BE DIRECTED ONTO THE SUBBASE AND/OR PAVEMENT OF THE EASTBOUND LANE.

YEAR 2 (CONTINUED)

STAGE 3: NORTH SIDE CONSTRUCTION

RECONSTRUCT THE NORTH SIDE (WESTBOUND LANE) OF THE ROAD AS SHOWN ON THE TYPICAL SECTION AND PLANS. FLAGGERS SHALL BE USED TO MAINTAIN ONE-LANE TRAFFIC CONTROL IN THE WORK ZONE DURING THE DAY. IN THE EVENING, WESTBOUND TRAFFIC WILL BE DIRECTED ONTO THE SUBBASE AND/OR PAVEMENT OF THE WESTBOUND LANE.

STAGE 4: ISLAND CONSTRUCTION

CONSTRUCT CHANNELIZATION, TRAFFIC CALMING ISLANDS AND TRAFFIC SIGNAL ON MAIN STREET AS INDICATED ON THE PLANS. PLACE PAVEMENT TOP COURSE AND APPLY FINAL ROADWAY STRIPING.

YEAR 3 (SPRING)

PLANT TREES AND SHRUBS IN EARLY SPRING TO MAXIMIZE THE CHANCE OF SURVIVAL.

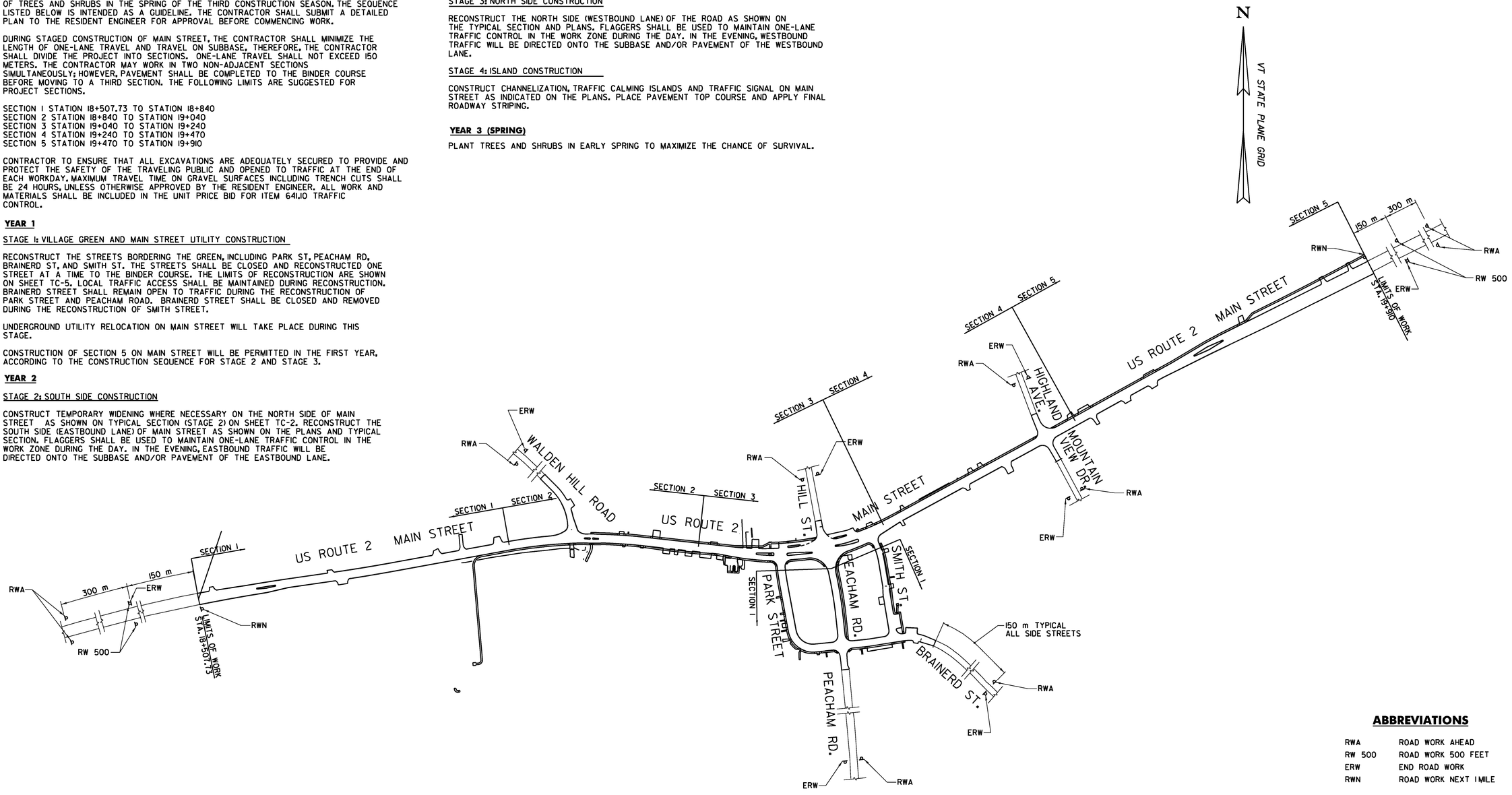

CONSTRUCTION APPROACH SIGNING
N.T.S.

NOTES:

1. CONSTRUCTION APPROACH SIGNING (RWA AND ERW) ON SIDE STREETS SHALL BE PLACED AT 150 m FROM THE LIMIT OF WORK, OR AS DIRECTED BY THE RESIDENT ENGINEER.
2. REFERENCE VTRANS' STANDARD SHEET E-100.

ABBREVIATIONS

RWA	ROAD WORK AHEAD
RW 500	ROAD WORK 500 FEET
ERW	END ROAD WORK
RWN	ROAD WORK NEXT 1 MILE

Stantec

PROJECT NAME:	DANVILLE
PROJECT NUMBER:	F EGC 028-3(32)
FILE NAME: ...\highway\plotfiles\cas.PTF	PLOT DATE: 1/18/2011
DESIGN SUPERVISOR: GARY SANTY	DRAWN BY: STANTEC
DESIGNED BY: STANTEC	CHECKED BY: STANTEC
CONSTRUCTION APPROACH SIGNING CAS-1	SHEET 217 OF 306

1/18/2011 1:54:51 PM v:\1953\active\195300033_0192\highway\plotfiles\cas.PTF

INTRODUCTION

1. THE FOLLOWING TRAFFIC CONTROL PLAN IS INTENDED TO BE A GENERAL CONCEPT FOR STAGING THE WORK WHILE MAINTAINING TRAFFIC. IT IS THE CONTRACTOR'S RESPONSIBILITY TO PROVIDE SPECIFIC DETAILS TO ADDRESS SPECIFIC SITUATIONS. THE CONTRACTOR SHALL SUBMIT A SITE SPECIFIC TRAFFIC CONTROL TO THE RESIDENT ENGINEER. THE CONTRACTOR MUST ALLOW AT LEAST 4 WEEKS FOR REVIEW AND APPROVAL OF A COMPREHENSIVE PLAN AND 2 WEEKS FOR REVIEW AND APPROVAL OF MINOR CHANGES/DETAILS.

2. ALL TRAFFIC CONTROL DETAILS MUST BE DESIGNED AND IMPLEMENTED IN ACCORDANCE WITH THE 2009 FHWA MANUAL ON UNIFORM TRAFFIC CONTROL DEVICES (MUTCD) AND VTRANS STANDARDS E-100, E-100A, E-101, E102, E102A, E-103, E-106, E-107, E-107A, AND E-110.

GENERAL

3. THE BID PRICE FOR TRAFFIC CONTROL - ITEM 641.10 SHALL INCLUDE ALL CONSTRUCTION SIGNING, BARRELS, CONES, DELINEATORS, BARRICADES, AND TEMPORARY REGULATORY AND WARNING SIGNS AND POSTS. ADJUSTING, RELOCATING AND REMOVING OF THESE DEVICES SHALL ALSO BE INCLUDED. TEMPORARY SIGNAL WORK AND NECESSARY ADJUSTMENTS TO ACCOMMODATE EACH STAGE OF CONSTRUCTION SHALL BE INCLUDED. DEVELOPING DETAILED TRAFFIC CONTROL PLANS FOR LANE CLOSURES, DETOURS AND OTHER WORK REQUIRING TEMPORARY TRAFFIC CONTROL SHALL ALSO BE INCLUDED. THE FOLLOWING ITEMS WILL BE PAID UNDER THEIR SPECIFIC BID PRICES.

   621.90 - TEMP. TRAFFIC BARRIER
   630.10 - UNIFORMED TRAFFIC OFFICERS
   630.15 - FLAGGERS
   646.600, .610, .650, .680, .690, & .700 - TEMP. PAVEMENT MARKINGS (PM'S)
   900.645 - SPECIAL PROVISION (TEMPORARY ROADWAY WIDENING)(STAGE 2)

4. MAINTENANCE AND PROTECTION OF TRAFFIC SHALL BE PROVIDED IN ACCORDANCE WITH SECTION 641 TRAFFIC CONTROL OF THE VTRANS STANDARD SPECIFICATIONS FOR CONSTRUCTION 2006, THE FHWA MANUAL ON UNIFORM TRAFFIC CONTROL DEVICES (M.U.T.C.D.), AND ANY PROVISIONS IN THE PLANS AND/OR CONTRACT, OR AS DIRECTED BY THE ENGINEER.

5. THE TRAFFIC CONTROL PLANS SHOWN ARE CONSIDERED TO BE MINIMUM REQUIREMENTS. ADDITIONAL SIGNS AND/OR CONTROL DEVICES MAY RE REQUIRED BY THE M.U.T.C.D. OR AS DIRECTED BY THE ENGINEER. THESE WILL BE PAID INCIDENTAL TO ITEM 641.10 TRAFFIC CONTROL.

6. THE SIGN LOCATIONS ARE APPROXIMATE. THE EXACT LOCATIONS SHALL BE DETERMINED BY THE ENGINEER.

7. VEHICLES BELONGING TO THE CONTRACTOR OR WORKERS SHALL NOT BE PARKED ON THE PAVEMENT OR SHOULDERS ALONG A ROADWAY BEING USED BY THE GENERAL PUBLIC. VEHICLES SHALL NOT BE PARKED IN A MANNER WHICH OBSTRUCTS ANY SIGNS, BANNERS, BARRICADES, OR ANY OTHER TRAFFIC CONTROL DEVICES.

8. THE CONTRACTOR SHALL NOT PARK EQUIPMENT OR STORE MATERIAL WHERE IT IS DEEMED BY THE ENGINEER TO BE A SAFETY HAZARD.

9. ANY EXISTING PAVEMENT MARKINGS WHICH CONFLICT WITH THE TRAFFIC CONTROL PLAN SHALL BE REMOVED AS DIRECTED BY THE RESIDENT ENGINEER. THE WORK SHALL PAID UNDER ITEM 646.85, REMOVAL OF EXISTING PAVEMENT MARKINGS.

10. THE CONTRACTOR SHALL SCHEDULE CONSTRUCTION OPERATIONS IN A MANNER SO AS TO MINIMIZE THE LENGTH OF TIME THAT NORMAL TRAFFIC FLOWS ARE DISTURBED.

11. TEMPORARY PAVEMENT MARKINGS AND/OR DELINEATION DEVICES SHALL BE PROVIDED AS SHOWN ON THE PLANS OR AS DIRECTED BY THE ENGINEER.

12. THE CONTRACTOR SHALL SUBMIT A DETAILED CONSTRUCTION SCHEDULE FOR EACH CONSTRUCTION STAGE.

13. AT LEAST ONE WAY ALTERNATING TRAFFIC WILL BE MAINTAINED DURING WORKING HOURS. TWO-WAY TRAFFIC MUST BE MAINTAINED DURING PEAK TRAFFIC HOURS (7AM-9AM, 4PM-6PM), UNLESS OTHERWISE APPROVED BY RESIDENT ENGINEER.

14. DUST CONTROL IS TO BE PAID FOR UNDER ITEM 609.10 OR ITEM 609.15, AS DIRECTED BY THE ENGINEER.

15. WHEN TYPE III BARRICADES ARE USED NEAR DRIVEWAYS OR INTERSECTIONS, THEY SHALL BE PLACED IN SUCH A WAY AS TO NOT OBSCURE SIGHT DISTANCE.

16. THE CONTRACTOR SHALL NOT MIX DELINEATION DEVICES IN A LINEAR CLOSURE OR TAPER (I.E. CONES, VERTICAL PANELS, OR DRUMS SHALL NOT BE USED IN THE SAME TAPER OR CLOSURE). HOWEVER, DIFFERENT DELINEATION DEVICES MAY BE USED IN DIFFERENT AREAS OF THE PROJECT.

GENERAL (CONT.)

18. THE MAXIMUM SPACING OF DELINEATORS, IN METERS, IS 1.0 TIMES THE CONSTRUCTION ZONE SPEED LIMIT FOR TAPERS AND 2.0 TIMES THE SPEED LIMIT FOR TANGENTS.

19. EXISTING OVERHEAD UTILITIES, WHICH INTERFERE WITH TEMPORARY PAVEMENT ON THE NORTH SIDE OF MAIN STREET, SHALL BE RELOCATED BY THE UTILITY COMPANY AS DIRECTED BY THE ENGINEER.

20. THE CONTRACTOR SHALL COORDINATE ANY UTILITY WORK, SUBCONTRACTOR WORK, PUBLIC MAINTENANCE, OR OTHER CONSTRUCTION OPERATIONS IN THE AREA AND IS RESPONSIBLE TO ENSURE THAT PROPER TRAFFIC CONTROL IS OBTAINED FOR ALL CONDITIONS.

21. THE CONTRACTOR SHALL RESTORE TWO-WAY TRAFFIC AT THE END OF EACH WORKDAY.

22. ALL ROADWAY AREAS TEMPORARILY CLOSED FOR TRENCH, CULVERT, OR CONDUIT EXCAVATION SHALL BE REOPENED AT THE END OF THE WORKDAY. AT ALL TIMES WHEN WORK IS NOT IN PROGRESS, ALL OPENINGS IN THE ROADWAY SHALL BE BACK-FILLED OR PROTECTED TO PROVIDE SAFE PASSAGE OF THE TRAVELING PUBLIC.

23. WHEN TWO OR MORE WORK AREAS ARE ADJACENT, OVERLAP, OR ARE IN CLOSE PROXIMITY AS DETERMINED BY THE ENGINEER, THE CONTRACTOR SHALL ENSURE THERE IS NO CONFLICTING SIGNAGE AND THAT LANE CONTINUITY IS MAINTAINED THROUGHOUT ALL WORK AREAS.

24. DROP OFF PROTECTION IN CONSTRUCTION AREAS SHALL CONFORM TO VTRANS STANDARD SHEET E-108.

25. IN ACCORDANCE WITH ITEM 641.10 TRAFFIC CONTROL, THE CONTRACTOR SHALL MAINTAIN DRAINAGE FACILITIES AND OTHER HIGHWAY ELEMENTS. THE CONTRACTOR SHALL DEVOTE PARTICULAR ATTENTION TO ALL DRAINAGE FACILITIES TO KEEP THEM FULLY OPERATIVE AT ALL TIMES (INCLUDING WORK AREAS). ALL COSTS ASSOCIATED WITH THIS WORK IS INCLUDED IN ITEM 641.10.

SCHOOL ACCESS

26. SCHOOL ACCESS SHALL BE MAINTAINED AT ALL TIMES. THE CONTRACTOR IS REQUIRED TO COORDINATE WITH APPROPRIATE SCHOOL OFFICIALS TWO WEEKS IN ADVANCE OF ANY WORK SO THAT THERE WILL BE ADEQUATE TIME FOR THE CONTRACTOR TO ADJUST THE WORK SCHEDULE TO ACCOMMODATE THE NEEDS OF THE SCHOOL.

EMERGENCY ACCESS

27. AT ALL TIMES DURING CONSTRUCTION, THE CONTRACTOR MUST PROVIDE SAFE AND CONVENIENT EMERGENCY ACCESS. LOCAL FIRE, POLICE, AND AMBULANCE AGENCIES SHALL BE NOTIFIED BY THE CONTRACTOR PRIOR TO THE START OF WORK IN ORDER TO COORDINATE AND MAINTAIN SUFFICIENT EMERGENCY ROUTES.

28. THE CONTRACTOR SHALL SUBMIT TO THE APPROPRIATE LAW ENFORCEMENT AND EMERGENCY AGENCIES IN WRITING THE NAME, ADDRESS, AND TELEPHONE NUMBER OF THE PERSON OR PERSONS AUTHORIZED TO SECURE LABOR, MATERIALS, AND EQUIPMENT FOR EMERGENCY REPAIRS OUTSIDE THE NORMAL WORKING HOURS. DUPLICATE COPIES OF THE ABOVE SHALL BE FILED WITH THE ENGINEER.

PUBLIC INGRESS AND EGRESS

29. THE CONTRACTOR SHALL PROVIDE PROPERTY OWNERS WITH PROPER ACCESS TO THEIR DRIVEWAYS AND SHALL MAINTAIN THEM THROUGH ALL TEMPORARY TRAFFIC CONTROL ZONES AND SHALL DELINEATE THEM BY MEANS OF SIGNS, CONES AND/OR DRUMS AND POST FLAGGERS AS DIRECTED BY THE ENGINEER.

30. WHERE DIRECT ACCESS TO DRIVEWAYS IS NOT POSSIBLE DUE TO NECESSARY CONSTRUCTION OPERATIONS, THE CONTRACTOR SHALL PLAN ALTERNATE MEANS OF ACCESS AND SUBMIT SUCH PLANS FOR APPROVAL BEFORE OPERATIONS COMMENCE. THE COST OF THIS WORK SHALL BE INCLUDED IN THE THE PRICE BID FOR ITEM 641.10 TRAFFIC CONTROL.

31. LEFT TURNS IN AND OUT OF DRIVEWAYS DO NOT NEED TO BE MAINTAINED IN AREAS WHERE EXCAVATION OR PAVING OPERATIONS ARE ON-GOING. AT THE END OF THE CONSTRUCTION DAY, ACCESS ACROSS THE WORK ZONE WILL BE RESTORED.

PUBLIC INGRESS AND EGRESS (CONT.)

32. THE CONTRACTOR SHALL NOTIFY THE OWNERS/USERS OF DRIVEWAYS AT LEAST 24 HOURS IN ADVANCE OF ANY WORK TO BE DONE AT THAT LOCATION. COMMERCIAL ESTABLISHMENTS SHALL HAVE A MINIMUM OF ONE DRIVEWAY OPEN AT ALL TIMES DURING NORMAL BUSINESS HOURS. THE CONTRACTOR HAS THE RESPONSIBILITY OF MAINTAINING SAFE AND PROPER ACCESS TO BUILDINGS IN THE VICINITY OF CONSTRUCTION.

33. WHERE EXISTING SIDEWALKS ARE CLOSED DURING CONSTRUCTION, PEDESTRIAN TRAFFIC SHALL BE MAINTAINED AT ALL TIMES ON AT LEAST ONE SIDE OF THE ROAD. UNDER SUCH CIRCUMSTANCES, THE CONTRACTOR, AT MINIMUM, SHALL PROVIDE DELINEATED CROSSWALKS AT INTERSECTIONS. TEMPORARY CROSSWALKS SHALL BE MAINTAINED AND MOVED AS NECESSARY TO ACCOMMODATE PEDESTRIAN SAFETY. PAYMENT SHALL BE MADE UNDER THE TEMPORARY PAVEMENT MARKING ITEMS. SHOULD THE ENGINEER DECIDE ADDITIONAL TEMPORARY SIDEWALK (BEYOND THAT CALLED ON THE PLANS) IS NECESSARY, A LIGHT DUTY PAVEMENT SECTION MADE UP OF SUBBASE AND BITUMINOUS CONCRETE SHALL BE USED AS SHOWN ON SHEET TCP-2. PAYMENT SHALL BE MADE UNDER THEIR RESPECTIVE ITEM NUMBERS. TEMPORARY PEDESTRIAN FACILITIES SHALL BE A MINIMUM 4' WIDTH. CHANNELING DEVICES SHALL CONFORM TO SECTION 6 OF THE MUTCD. THE CONTRACTOR SHALL NOT STORE OR PLACE CONSTRUCTION MATERIALS IN THE PEDESTRIAN PATH OF TRAVEL.

SIGNALS

34. PRIOR TO AND DURING THE STAGED CONSTRUCTION OF MAIN STREET, IT MAY BE NECESSARY TO RELOCATE THE FLASHING SIGNAL AT HILL ST. ADJUSTMENT OF THE SIGNAL TO LANE CONFIGURATION AS DIRECTED BY THE ENGINEER IS TO BE PAID FOR UNDER ITEM 641.10. IN ADDITION, THE EXISTING SYSTEM IS TO BE MAINTAINED UNDER ITEM 641.10. THE CONTRACTOR SHALL NOTIFY THE ENGINEER IN WRITING OF THE BEGINNING AND ENDING DATES OF SIGNAL MAINTENANCE. INCLUDED WITH THIS NOTICE SHALL BE A LIST OF EMERGENCY CONTACT TELEPHONE NUMBERS IN THE EVENT SIGNAL MAINTENANCE IS REQUIRED.

35. THE PEACHAM ROAD/HILL STREET TRAFFIC SIGNALS SHALL BE ERECTED AS SHOWN ON THE PLANS OR AS DIRECTED BY THE ENGINEER. THE TRAFFIC SIGNAL INSTALLATION SHALL BE COMPLETE BY THE END OF STAGE 4.

SIGNS

36. THE COVERING AND/OR REMOVING, RELOCATING, AND REPLACING OF EXISTING SIGN PANELS AND ASSEMBLIES SHALL BE AS DIRECTED BY THE ENGINEER. PAYMENT SHALL BE INCLUDED IN THE PRICE BID FOR TRAFFIC CONTROL - ITEM 641.10. SIGNS WHICH ARE NOT APPLICABLE DURING NON-WORKING HOURS SHALL BE COVERED OR REMOVED FROM VIEW AS DIRECTED BY THE ENGINEER.

37. CARE SHOULD BE TAKEN NOT TO DAMAGE THE PERMANENT SIGNS IF THEY ARE COVERED. ANY SIGN SO DAMAGED SHALL BE REPLACED BY THE CONTRACTOR AT NO ADDITIONAL COST TO THE STATE.

38. ADVANCE POSTING DISTANCE FOR SIGNS SHALL BE PER VTRANS STANDARD SHEETS E-100 AND E-100A.

39. ALL CONSTRUCTION SIGNS SHALL BE BLACK LETTERS ON REFLECTORIZED FLUORESCENT ORANGE BACKGROUND, AS IN SPECIFIED VTRANS STANDARDS.

40. SIGN MOUNTING HEIGHT SHALL BE 2.10m IN ALL AREAS WHERE PEDESTRIANS AND PARKED CARS ARE ENCOUNTERED, UNLESS OTHERWISE DIRECTED BY THE ENGINEER.

41. EXISTING SIGNING SHALL REMAIN, WITH RELOCATION AS NECESSARY, UNTIL IT IS NO LONGER NEEDED. TEMPORARY SIGNING SHALL BE ADDED, AS NEEDED AND AS REQUIRED BY THE M.U.T.C.D. NEW SIGNING SHALL BE INSTALLED AS IT BECOMES APPLICABLE AND AS CONSTRUCTION NEARS COMPLETION IN EACH STAGE.

42. THE CONTRACTOR SHALL PROVIDE TEMPORARY SIGNS FOR DIRECTING MOTORISTS TO THE ENTRANCES TO BUSINESSES ALONG THE CORRIDOR. SIGNS SHALL BE RECTANGULAR WITH WHITE TEXT ON BLUE BACKGROUND. SIGNS SHALL INCLUDE THE NAME OF THE BUSINESS WITH ARROW POINTING IN THE DIRECTION OF THE BUSINESS. LETTER HEIGHTS SHALL NOT EXCEED 4". SIGNS SHALL BE INSTALLED ON AN NCHRP 350 COMPLIANT SIGN STAND. THESE SIGNS SHALL BE MOVED AND/OR ALTERED AS APPROPRIATE FOR EACH STAGE OF CONSTRUCTION. ALL COSTS ASSOCIATED WITH THIS WORK SHALL BE INCLUDED IN ITEM 641.10.

FLAGGING AND UNIFORMED TRAFFIC OFFICERS

43. THE CONTRACTOR SHALL PROVIDE FLAGGERS FOR ONE LANE TRAFFIC CONTROL ON MAIN STREET, ADJACENT TO WORK ZONES ON SIDE STREETS, AND AT LOCATIONS WHERE SIGHT DISTANCES ARE IMPAIRED BY CONSTRUCTION OPERATIONS OR OTHER SITUATIONS. THE CONTRACTOR SHALL PROVIDE UNIFORMED TRAFFIC OFFICERS AT SIGNALIZED INTERSECTIONS DURING MODIFICATION OF SIGNALS.

44. FLAGGING STATIONS SHALL BE ADJACENT TO THE TRAFFIC LANES BEING CONTROLLED AND SHALL BE POSITIONED SO THAT FLAGGER VISIBILITY TO APPROACHING TRAFFIC IS OPTIMIZED. THE FLAGGER SHALL BE READILY VISIBLE TO APPROACHING TRAFFIC BETWEEN 75 m AND 100 m IN ADVANCE OF THE FLAGGER LOCATION. ACCORDINGLY, THE TANGENT DIMENSIONS ON EACH END OF THE WORK AREA SHALL BE ESTABLISHED TO ACHIEVE THE APPROPRIATE FLAGGING STATION LOCATION, AS DIRECTED BY THE RESIDENT ENGINEER.

45. FLAGGERS SHALL BE REQUIRED TO USE TWO-WAY RADIOS, WALKIE-TALKIES OR OTHER FORMS OF ENHANCED COMMUNICATION WHEN ONE FLAGGER IS NOT VISIBLE TO THE OTHER, OR IF THE ENGINEER DEEMS IT NECESSARY. COST TO BE INCLUDED IN ITEM 641.10 TRAFFIC CONTROL.

46. STOP/SLOW PADDLES SHALL BE USED FOR ALL FLAGGING, AND SHALL CONFORM TO THE REQUIREMENTS SET FORTH IN THE M.U.T.C.D.

Metric

1/18/2011 1:54:53 PM v:\1953\active\195310033_10192\highway\plotfiles\TCP-1.PTF

Stantec

PROJECT NAME: DANVILLE	
PROJECT NUMBER: F EGC 028-3(32)	
FILE NAME: ...\highway\plotfiles\TCP-1.PTF	PLOT DATE: 1/18/2011
DESIGN SUPERVISOR: GARY SANTY	DRAWN BY: STANTEC
DESIGNED BY: STANTEC	CHECKED BY: STANTEC
TRAFFIC CONTROL PLAN TC-1	SHEET 218 OF 306

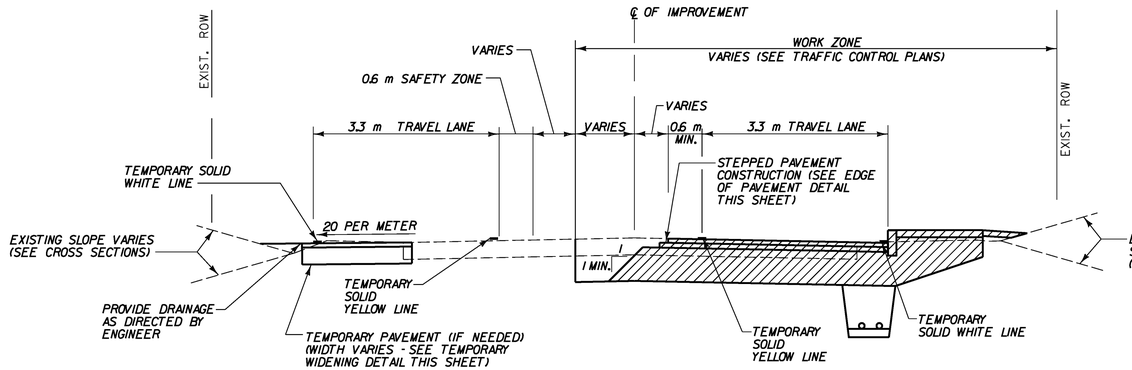

TYPICAL SECTION (STAGE 2)

SCALE: 1:100

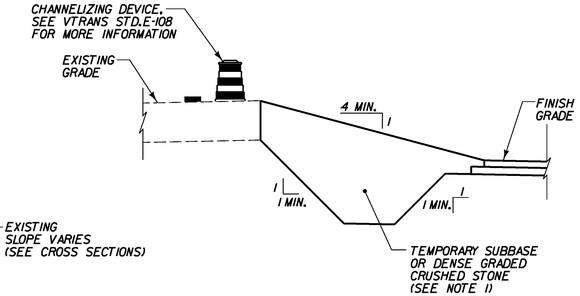

NOTE: WHERE NEW PROFILE DEVIATES FROM EXISTING GROUND, THE DETAIL ABOVE SHALL BE USED BETWEEN DIFFERENCES IN GRADE.

SLOPE DETAIL

NOT TO SCALE

NOTES:

1. CONTRACTOR SHALL FILL IN EXCAVATED AREAS AT THE END OF EACH WORK DAY WITH TEMPORARY SUBBASE MATERIAL. ALL COSTS ASSOCIATED WITH THIS WORK SHALL BE INCLUDED IN ITEM 900.645 - SPECIAL PROVISION (TEMPORARY ROADWAY WIDENING)(STAGE 2).
2. TRAFFIC CALMING AND CHANNELIZING ISLANDS SHALL BE CONSTRUCTED DURING OR AFTER STAGE 3 UNLESS OTHERWISE NOTED ON SHEETS TC-3 THROUGH TC-7.
3. THE TOP COURSE OF PAVEMENT SHALL BE PLACED FOLLOWING THE CONSTRUCTION OF THE CHANNELIZING AND TRAFFIC CALMING ISLANDS.
4. SUBBASE PLACEMENT SHALL KEEP PACE WITH THE EXCAVATION SO THAT THE DISTANCE BETWEEN THEM NEVER EXCEEDS 30m. AT THE END OF THE WORKDAY ALL EXCAVATION SHALL BE BACKFILLED.
5. ALL DIMENSIONS IN MILLIMETERS UNLESS OTHERWISE NOTED.
6. ONE WAY ALTERNATING TRAFFIC ALLOWED DURING WORK HOURS. TWO WAY TRAFFIC MUST BE MAINTAINED DURING NON-WORK HOURS ON DENSE GRADED CRUSHED STONE.
7. PAYMENT FOR TEMPORARY ROADWAY WIDENING REQUIRED TO MAINTAIN TRAFFIC SHALL BE MADE UNDER ITEM 900.645 SPECIAL PROVISION (TEMPORARY ROADWAY WIDENING) (STAGE 2)
8. ANY TEMPORARY WIDENING'S MUST STAY INSIDE RIGHT-OF-WAY FOR PROJECT.
9. MAINTAIN PEDESTRIAN ACCESS AT ALL EXISTING SIDEWALK LOCATIONS. SEE DETAIL THIS SHEET FOR TEMPORARY SIDEWALK. REFER TO NOTE 33 ON SHEET TC-1 WHEN PEDESTRIAN ACCESS CANNOT BE MAINTAINED AT EXISTING SIDEWALK LOCATION.

TYPICAL SECTION (STAGE 3)

SCALE: 1:100

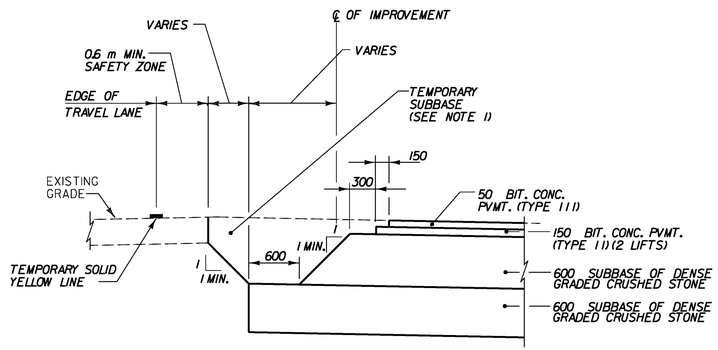

EDGE OF PAVEMENT DETAIL

NOT TO SCALE

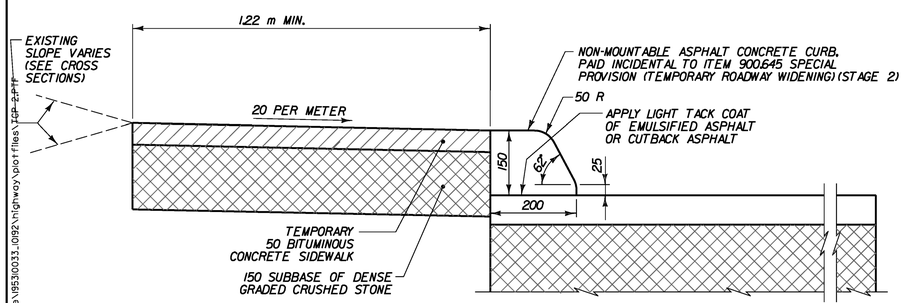

TEMPORARY CURB AND SIDEWALK DETAIL IN EXISTING SIDEWALK AREAS

NOT TO SCALE

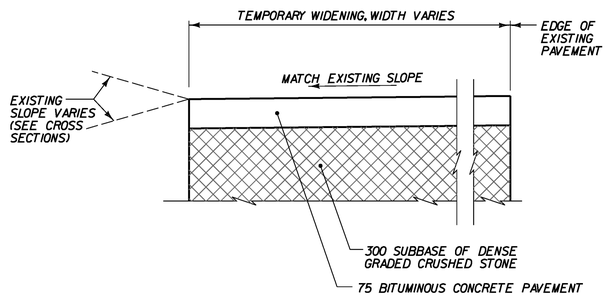

TEMPORARY WIDENING DETAIL (IF NEEDED)

NOT TO SCALE

PROJECT NAME:	DANVILLE
PROJECT NUMBER:	F EGC 028-3(32)
FILE NAME: ...\highway\plotfiles\TCP-2.PTF	PLOT DATE: 1/18/2011
DESIGN SUPERVISOR: GARY SANTY	DRAWN BY: STANTEC
DESIGNED BY: STANTEC	CHECKED BY: STANTEC
TRAFFIC CONTROL PLAN TC-2	SHEET 219 OF 306

Stantec

1/18/2011 15:45:55 PM v:\1953\active\19530033_0092\highway\plotfiles\TCP-2.PTF

Metric

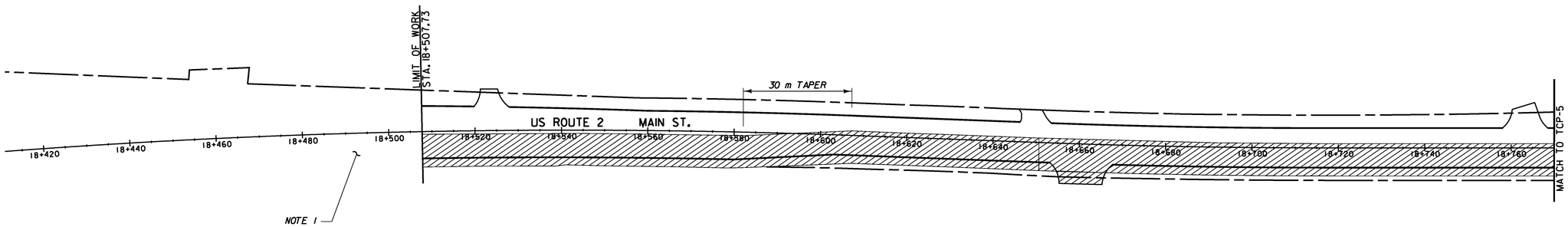

STAGE 2 PLAN

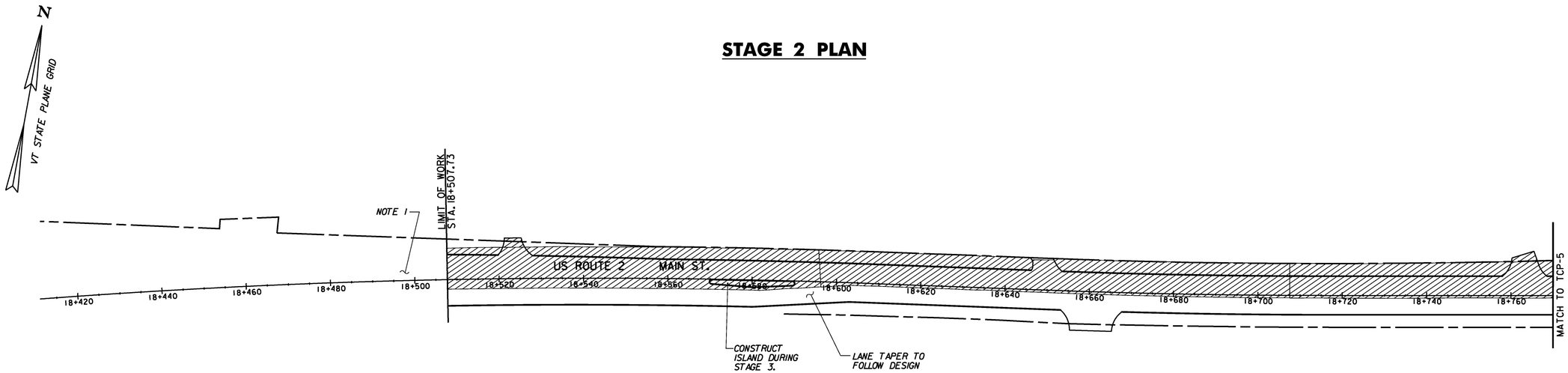

STAGE 3 PLAN

LEGEND

WORK ZONE

STAGE 4 ISLAND CONSTRUCTION

0 10 20 30
SCALE 1:500

Stantec

PROJECT NAME: DANVILLE	
PROJECT NUMBER: F EGC 028-3(32)	
FILE NAME: ...\highway\plotfiles\TCP-3.PTF	PLOT DATE: 1/18/2011
DESIGN SUPERVISOR: GARY SANTY	DRAWN BY: STANTEC
DESIGNED BY: STANTEC	CHECKED BY: STANTEC
TRAFFIC CONTROL PLAN TC-3	SHEET 220 OF 306

1/18/2011 1:54:57 PM v:\1953\active\19530033_1092\highway\plotfiles\TCP-3.PTF

Metric

N

VT STATE PLANE GRID

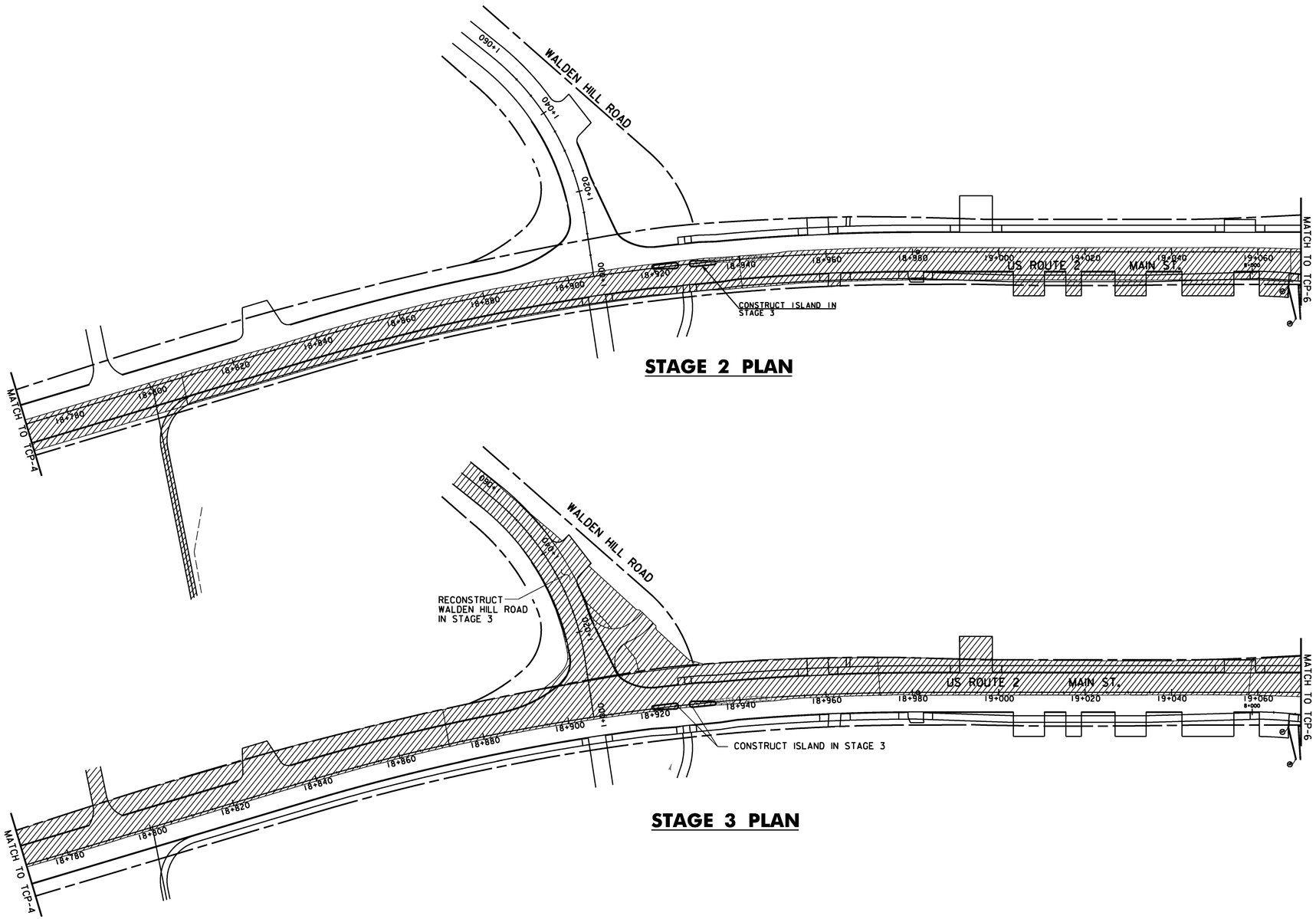

STAGE 2 PLAN

STAGE 3 PLAN

LEGEND

- WORK ZONE
- STAGE 4 ISLAND CONSTRUCTION

0 10 20 30
SCALE 1:500

Stantec

PROJECT NAME: DANVILLE	
PROJECT NUMBER: F EGC 028-3(32)	
FILE NAME: ...\highway\plotfiles\TCP-4.PTF	PLOT DATE: 1/18/2011
DESIGN SUPERVISOR: GARY SANTY	DRAWN BY: STANTEC
DESIGNED BY: STANTEC	CHECKED BY: STANTEC
TRAFFIC CONTROL PLAN TC-4	SHEET 221 OF 306

1/18/2011 11:45:58 PM v:\0953\active\95300033.0192\highway\plotfiles\TCP-4.PTF

Metric

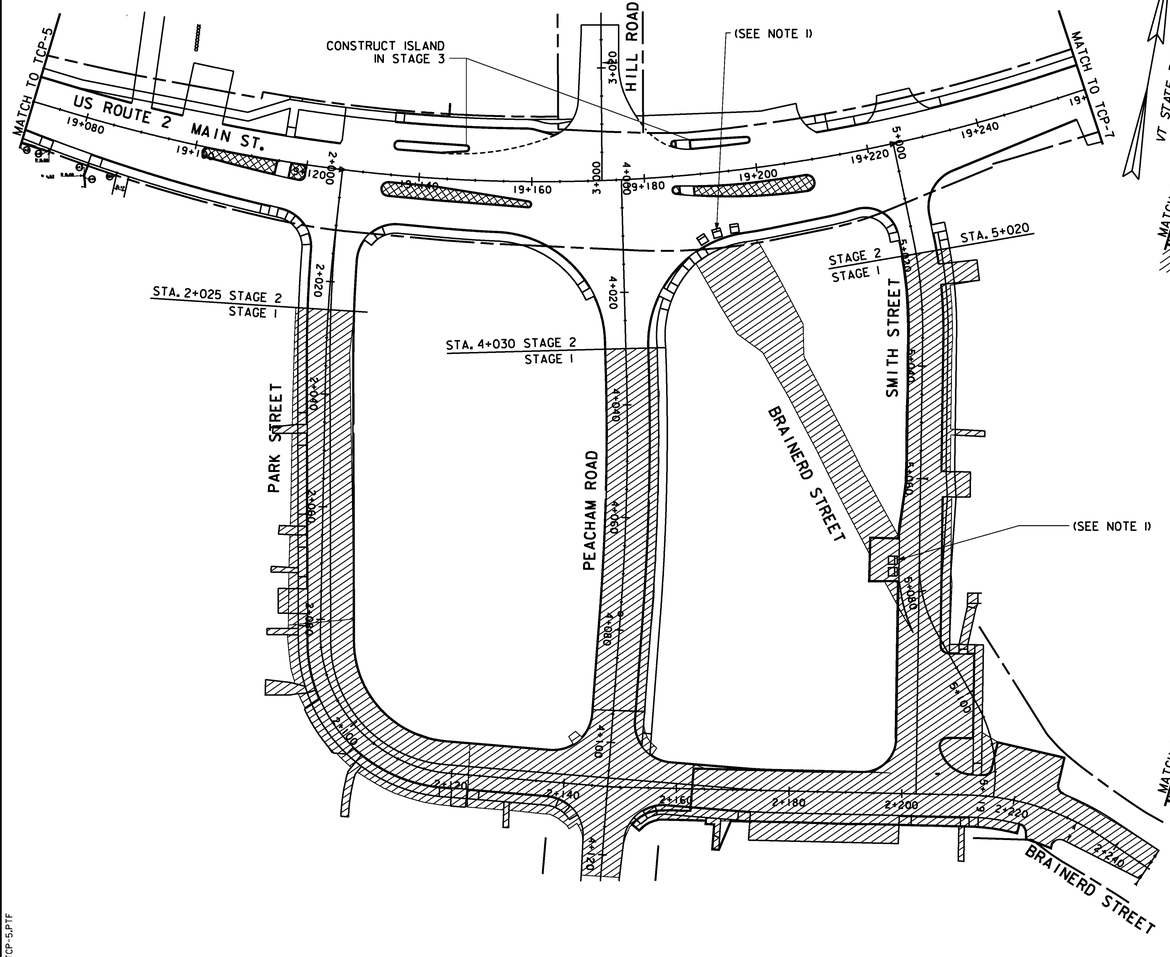

STAGE 1 PLAN
(SEE NOTES 2 AND 3)

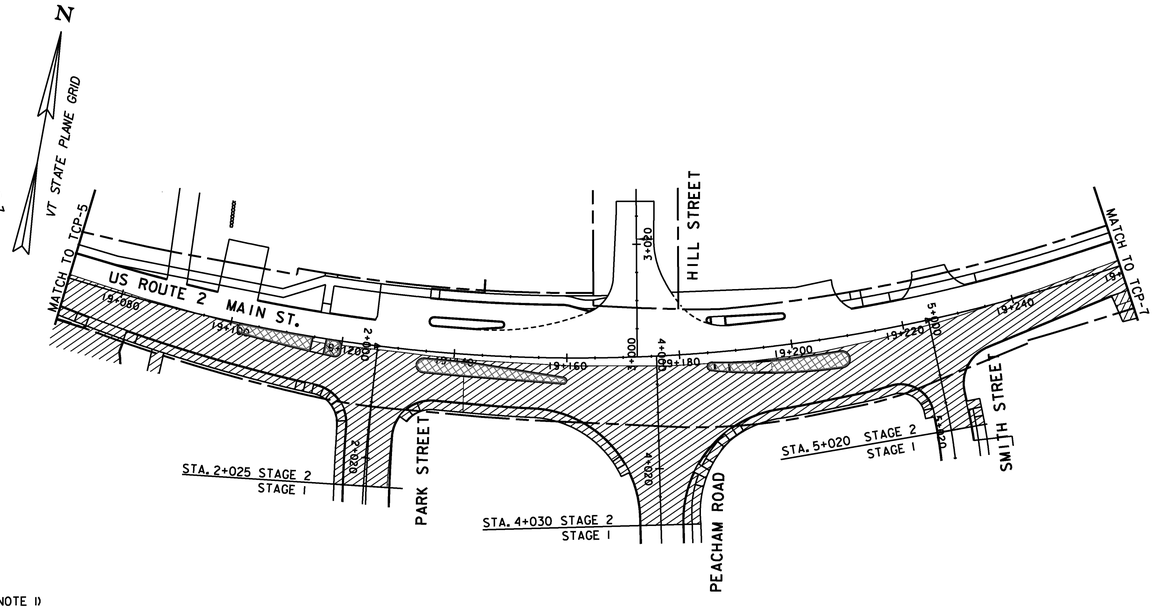

STAGE 2 PLAN

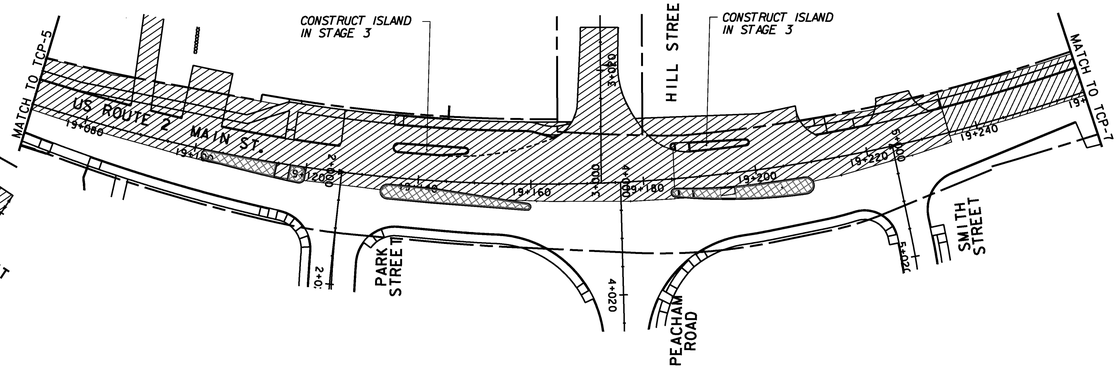

STAGE 3 PLAN

NOTES:

1. CONTRACTOR SHALL PLACE TYPE III BARRICADES, TO PROHIBIT TURNS ONTO BRAINERD STREET AFTER RECONSTRUCTION OF SMITH STREET AND REMOVAL OF BRAINERD STREET.
2. MAINTAIN MAIN STREET TRAFFIC USING EXISTING PAVEMENT AND LANE CONFIGURATION DURING STAGE 1.
3. ALL RECONSTRUCTED VILLAGE GREEN STREETS HAVE A LOWER PROFILE THAN EXISTING VILLAGE GREEN STREETS. THE CONTRACTOR SHALL PROVIDE A TEMPORARY BITUMINOUS CONCRETE RAMP BETWEEN THE NEW AND EXISTING PAVEMENT. SLOPE OF RAMP SHALL NOT EXCEED 1:10. CONSTRUCTION OF THE BITUMINOUS CONCRETE RAMP SHALL BE PAID FOR UNDER ITEM 900.680, SPECIAL PROVISION (BITUMINOUS CONCRETE PAVEMENT, SMALL QUANTITY (TON)).

LEGEND

WORK ZONE

STAGE 4 ISLAND CONSTRUCTION

0 10 20 30
SCALE 1:500

Stantec

PROJECT NAME: DANVILLE	
PROJECT NUMBER: F EGC 028-3(32)	
FILE NAME: ...\highway\plotfiles\TCP-5.PTF	PLOT DATE: 1/18/2011
DESIGN SUPERVISOR: GARY SANTY	DRAWN BY: STANTEC
DESIGNED BY: STANTEC	CHECKED BY: STANTEC
TRAFFIC CONTROL PLAN TC-5	SHEET 222 OF 306

1/18/2011 11:54:59 PM v:\1953\active\19530033.0192\highway\plotfiles\TCP-5.PTF

VAOT Metric

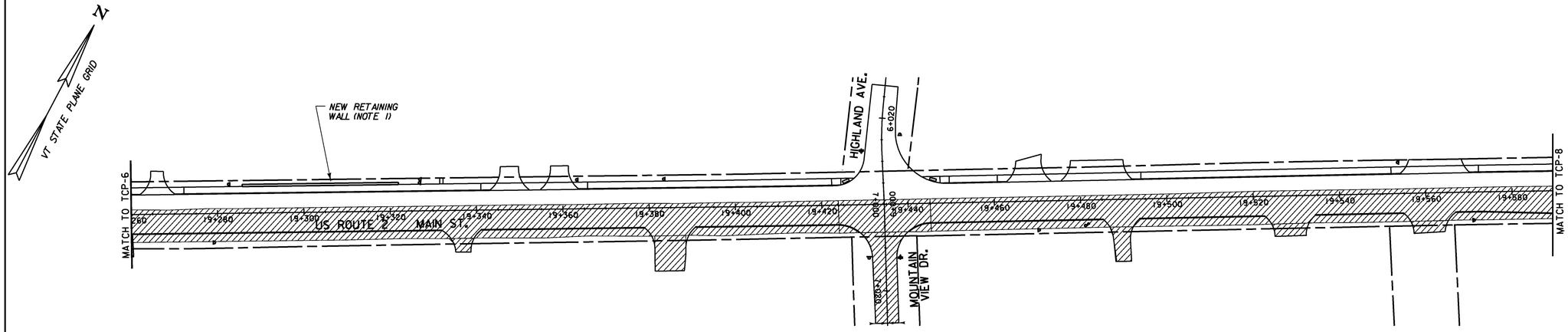

STAGE 2 PLAN

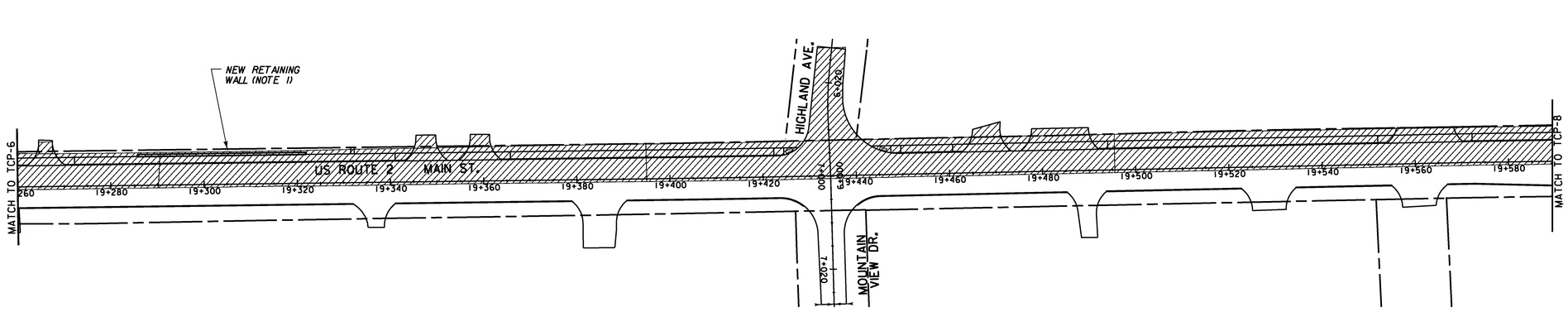

STAGE 3 PLAN

NOTES:

1. THE NEW RETAINING WALL SHALL BE CONSTRUCTED DURING STAGE 3. TO FACILITATE PLACEMENT OF TEMPORARY PAVEMENT IN STAGE 2 THE CONTRACTOR SHALL PLACE EARTH EMBANKMENT ALONG THE EXISTING SHOULDER FROM STATION 19+295 TO STATION 19+340 AND CONSTRUCT THE TEMPORARY PAVEMENT AS SHOWN ON THE PLANS. THE EMBANKMENT SHALL BE CONSTRUCTED FOLLOWING THE SPECIFICATIONS IN SECTION 203 OF THE VTRANS STANDARD SPECIFICATIONS FOR CONSTRUCTION, 2006. PAYMENT SHALL BE MADE INCIDENTAL TO ITEM 641.10.

LEGEND

WORK ZONE

STAGE 4 ISLAND CONSTRUCTION

0 10 20 30
SCALE 1:500

Stantec

PROJECT NAME: DANVILLE	
PROJECT NUMBER: F EGC 028-3(32)	
FILE NAME: ...\highway\plotfiles\TCP-6.PTF	PLOT DATE: 1/18/2011
DESIGN SUPERVISOR: GARY SANTY	DRAWN BY: STANTEC
DESIGNED BY: STANTEC	CHECKED BY: STANTEC
TRAFFIC CONTROL PLAN TC-6	SHEET 223 OF 306

1/18/2011 11:55:00 PM v:\953\active\95300033.1092\highway\plotfiles\TCP-6.PTF

VAOT Metric

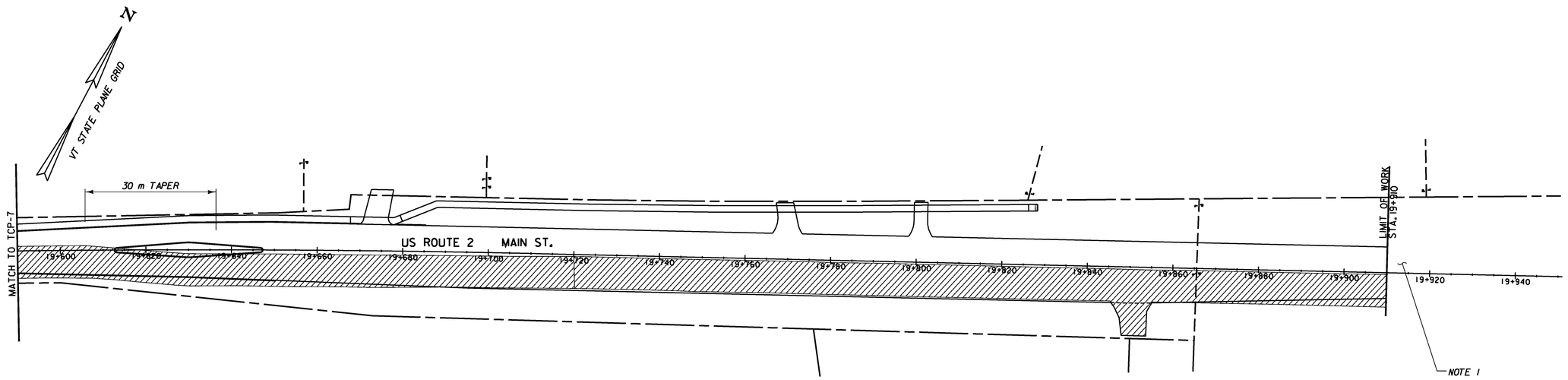

STAGE 2 PLAN

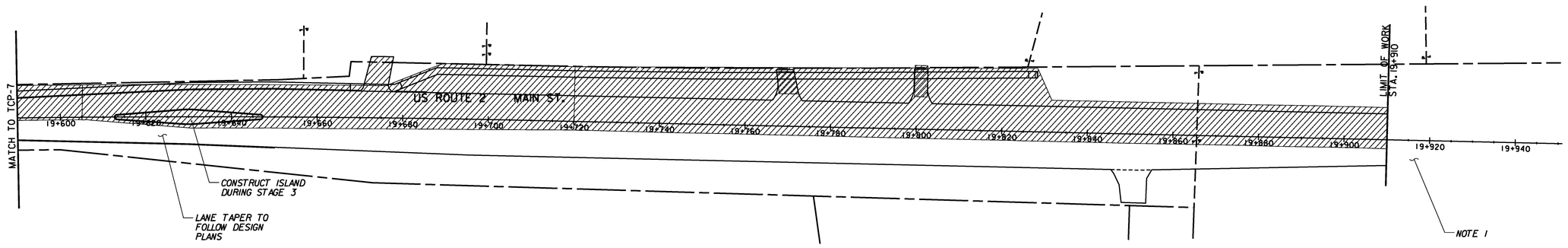

STAGE 3 PLAN

LEGEND

WORK ZONE

STAGE 4 ISLAND CONSTRUCTION

0 10 20 30
SCALE 1:500

Stantec

PROJECT NAME: DANVILLE	
PROJECT NUMBER: F EGC 028-3(32)	
FILE NAME: ...\highway\plotfiles\TCP-7.PTF	PLOT DATE: 1/18/2011
DESIGN SUPERVISOR: GARY SANTY	DRAWN BY: STANTEC
DESIGNED BY: STANTEC	CHECKED BY: STANTEC
TRAFFIC CONTROL PLAN TC-7	SHEET 224 OF 306

1/18/2011 11:55:01 PM v:\1953\active\19530033.1092\highway\plotfiles\TCP-7.PTF

NOTE:
DRAINAGE STRUCTURES AND TRANSVERSE PIPES ARE PROJECTED TO THE NEAREST CROSS SECTION AND DRAWN AT TRUE ELEVATION RELATIVE TO THE GRID AND AXIS, NOT RELATIVE TO THE ROADWAY SURFACE ON THE CROSS SECTION.

LEGEND

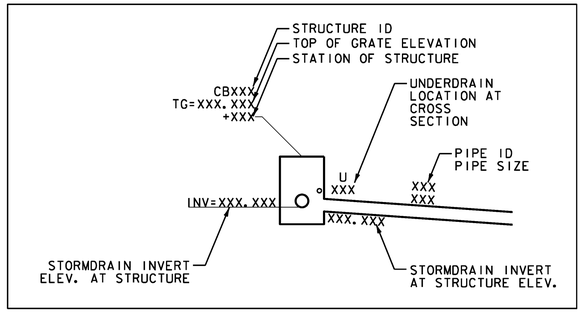

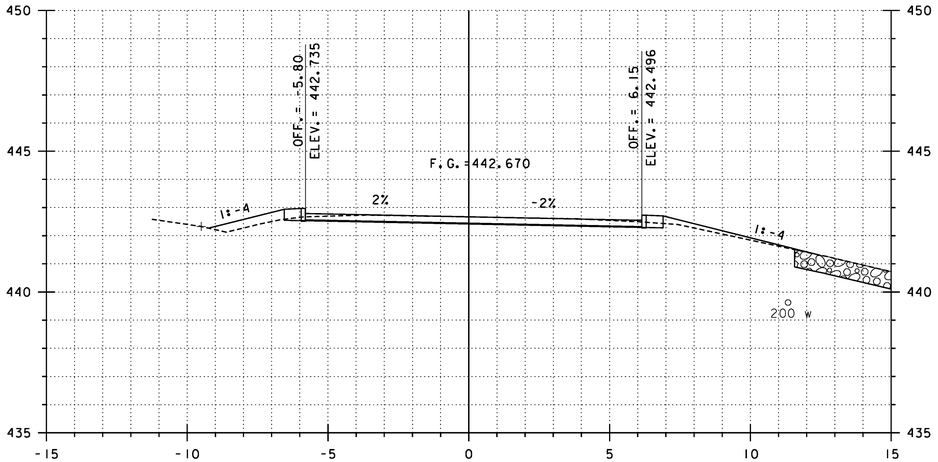

18+510

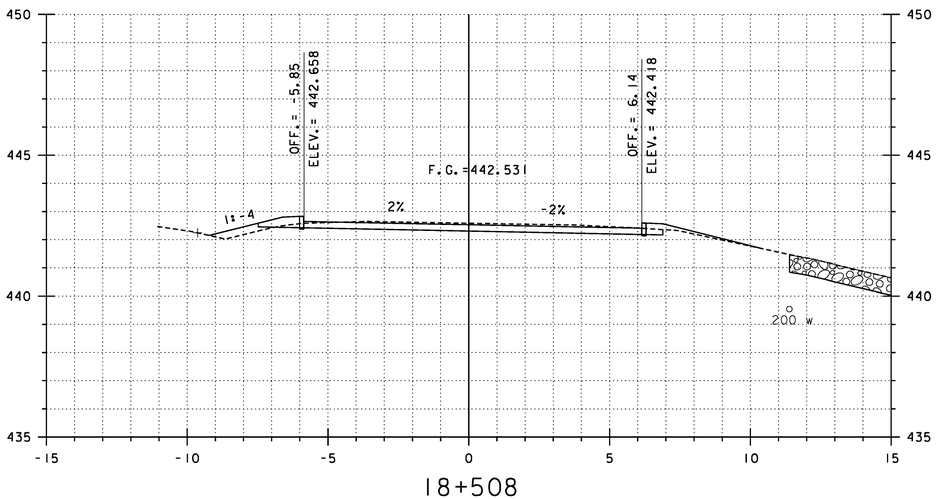

18+508

STA. 18+507.730
BEGIN APPROACH CONSTRUCTION
MATCH EXISTING
CONSTRUCT PAVEMENT
AND SUBBASE TRANSITION

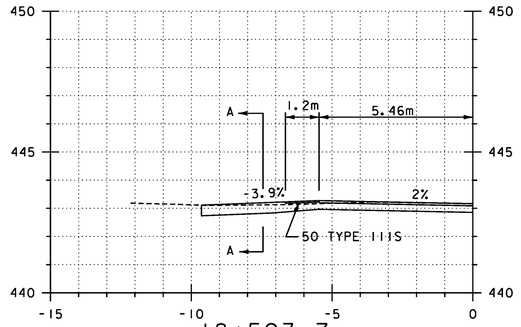

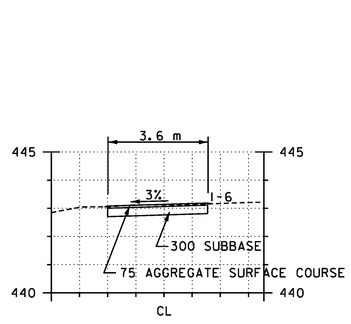

SECTION A-A

18+523.7
GRAVEL DRIVE, LT

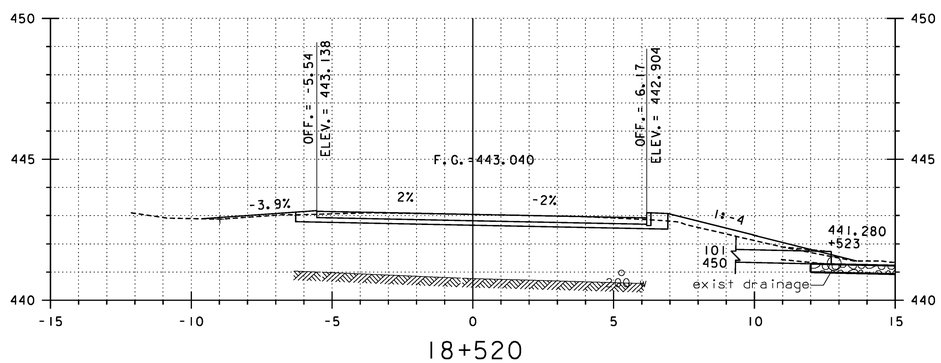

18+520

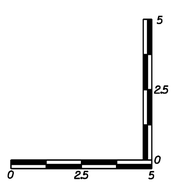

REPLACEMENT SHEETS ISSUED 02/24/12

STA 18+507.730 TO 18+523.7

PROJECT NAME: DANVILLE
PROJECT NUMBER: F EGC 028-3(32)

FILE NAME: ...\PlotFiles\I33 XS-US2_10m.ptf
DESIGN SUPERVISOR: GARY SANTY
DESIGNED BY: STANTEC
US ROUTE 2 CROSS SECTIONS – MLX-1

PLOT DATE: 2/24/2012
DRAWN BY: STANTEC
CHECKED BY: STANTEC
SHEET 225 OF 306

2/24/2012 2:30:49 PM V:\1953\active\195310033.0092\Highway\PlotFiles\I33 XS-US2_10m.ptf

STA. 18+553.730
END APPROACH CONSTRUCTION
BEGIN PROJECT F EGC 028-3(32)

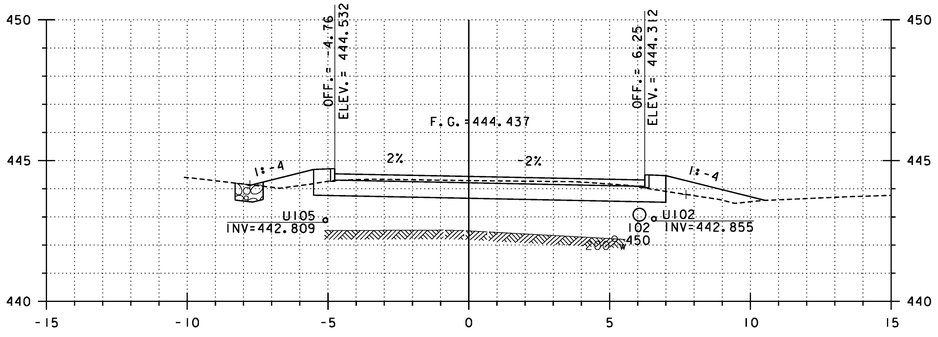

18+550

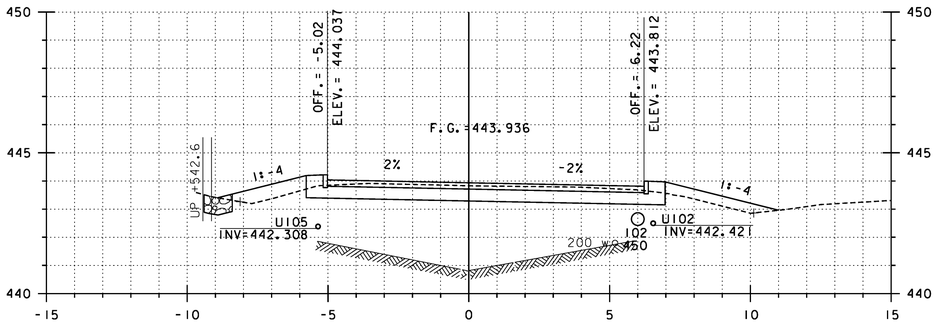

18+540

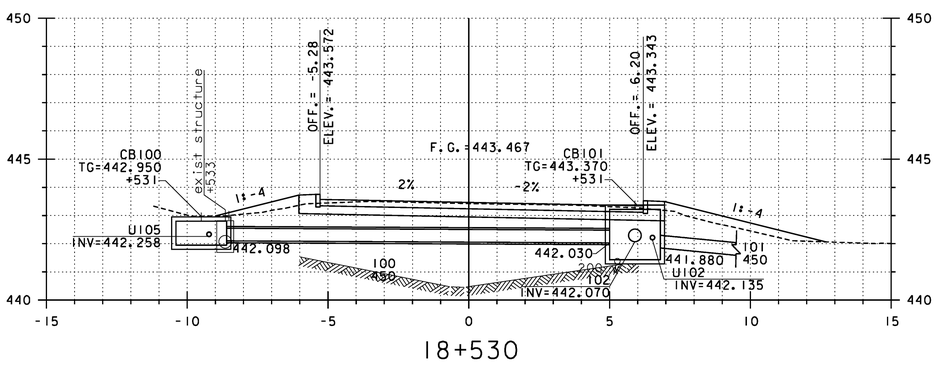

18+530

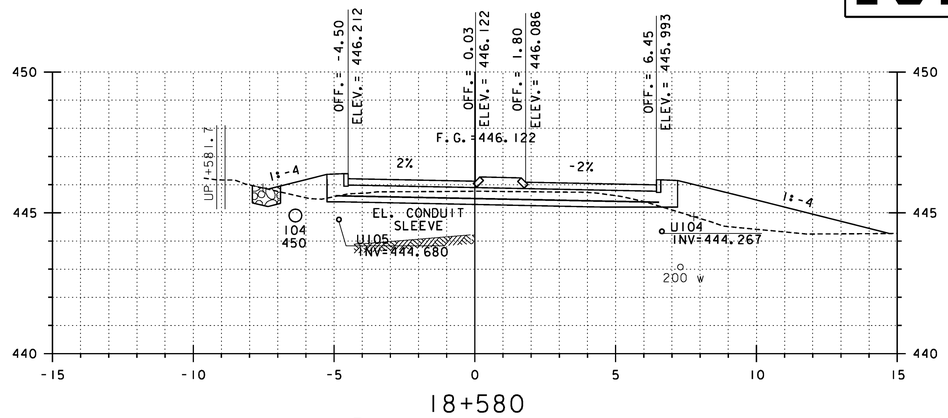

18+580

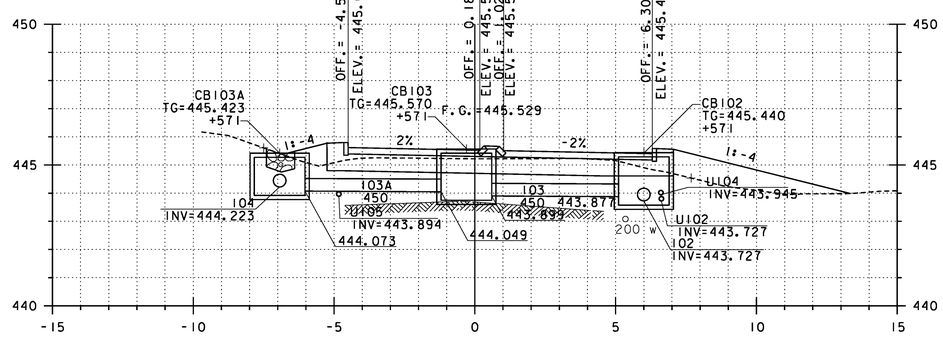

18+570

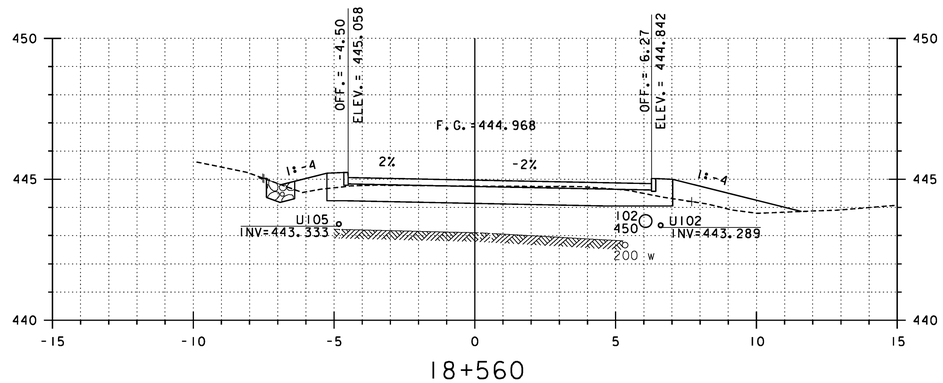

18+560

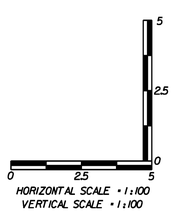

REPLACEMENT SHEETS ISSUED 02/24/12

STA 18+530 TO 18+580

PROJECT NAME: DANVILLE
PROJECT NUMBER: F EGC 028-3(32)

FILE NAME: ...\PlotFiles\I33 XS-US2_I0m.ptf
DESIGN SUPERVISOR: GARY SANTY
DESIGNED BY: STANTEC
US ROUTE 2 CROSS SECTIONS – MLX-2

PLOT DATE: 2/24/2012
DRAWN BY: STANTEC
CHECKED BY: STANTEC
SHEET 226 OF 306

2/24/2012 2:30:49 PM V:\1853\active\185300033_0092\Highway\PlotFiles\I33 XS-US2_I0m.ptf

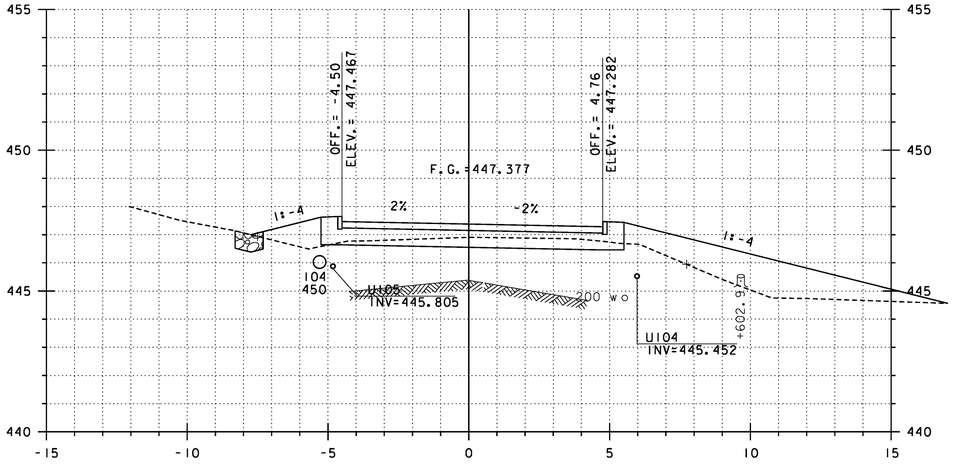

18+600

18+590

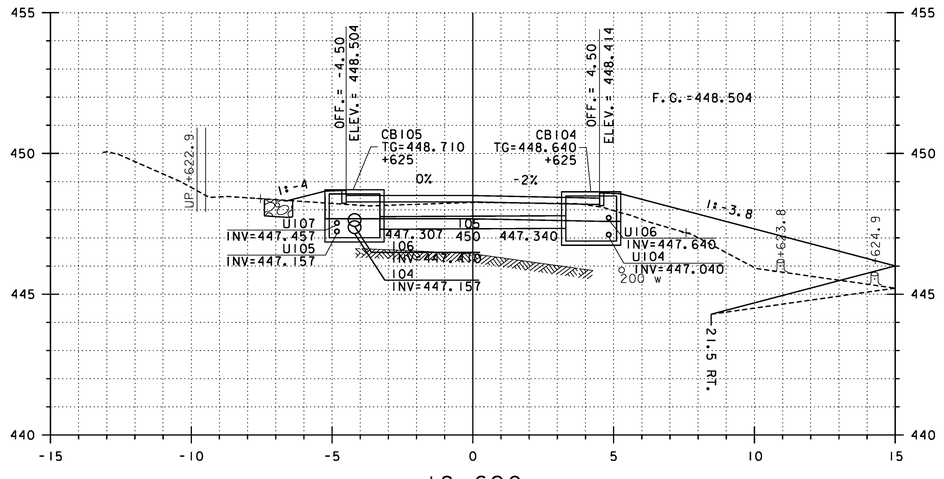

18+620

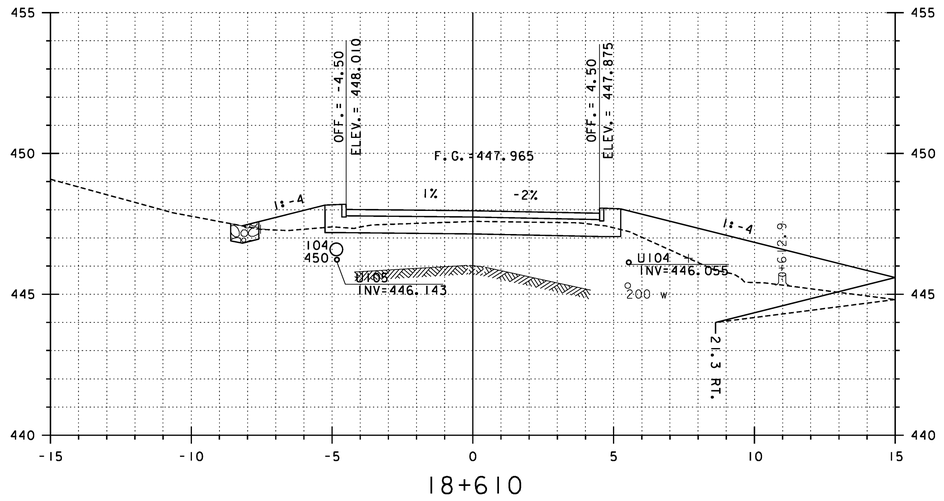

18+610

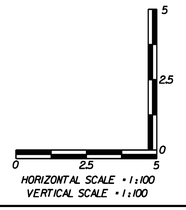

REPLACEMENT SHEETS ISSUED 02/24/12

STA 18+590 TO 18+620

PROJECT NAME: DANVILLE
PROJECT NUMBER: F EGC 028-3(32)

FILE NAME: ...\PlotFiles\I33 XS-US2_10m.ptf
DESIGN SUPERVISOR: GARY SANTY
DESIGNED BY: STANTEC
US ROUTE 2 CROSS SECTIONS – MLX-3

PLOT DATE: 2/24/2012
DRAWN BY: STANTEC
CHECKED BY: STANTEC
SHEET 227 OF 306

Stantec

2/24/2012 2:30:50 PM V:\0953\active\95300033.0092\Highway\PlotFiles\I33 XS-US2_10m.ptf

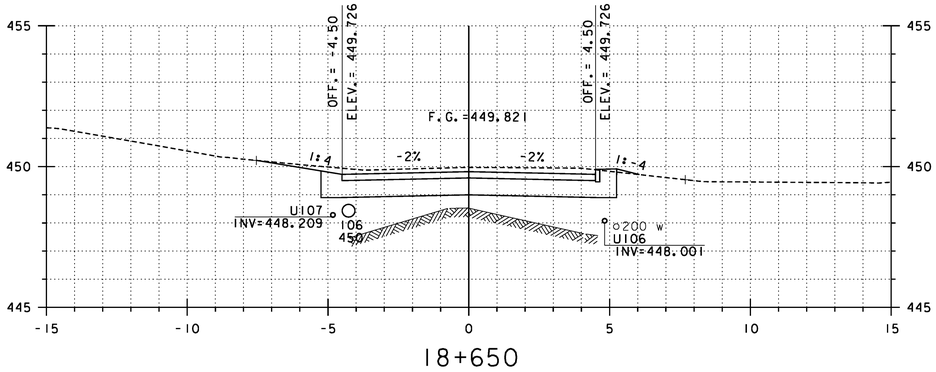

18+650

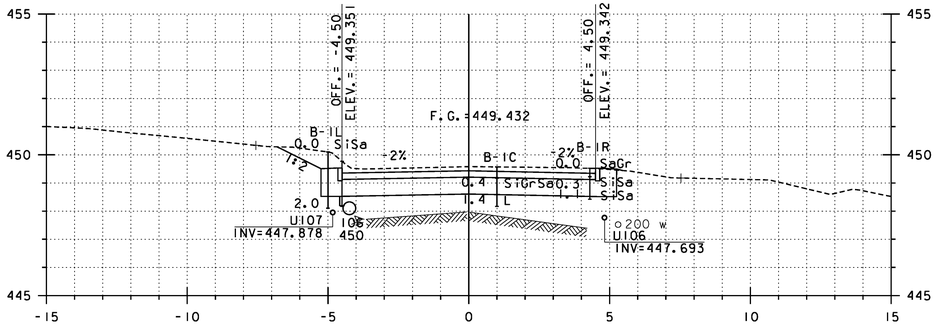

18+640

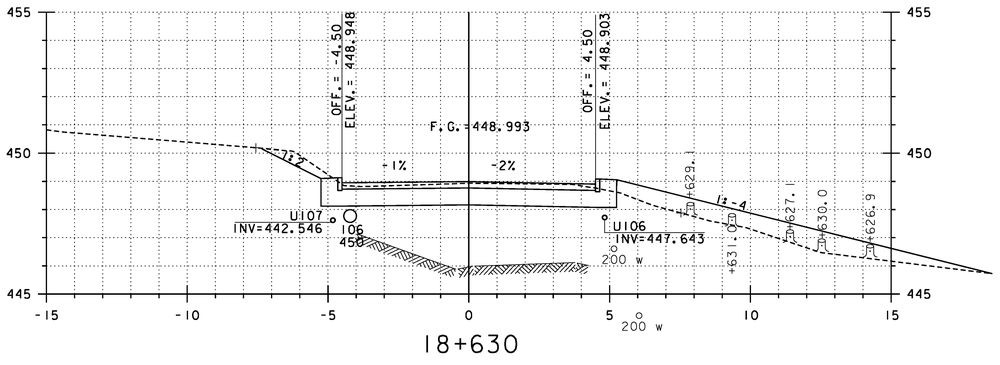

18+630

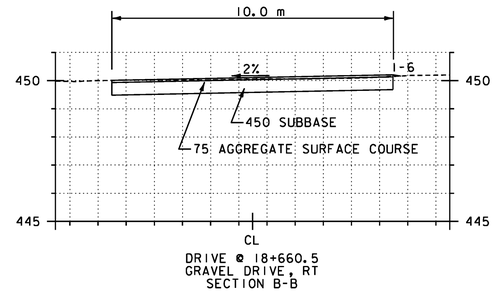

DRIVE @ 18+660.5
GRAVEL DRIVE, RT
SECTION B-B

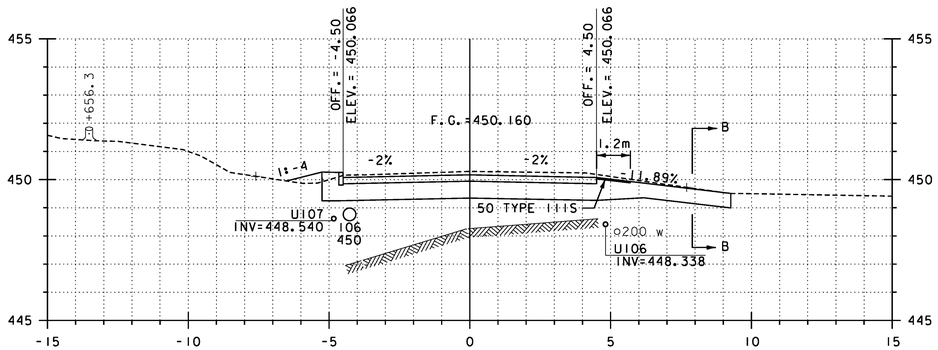

18+660

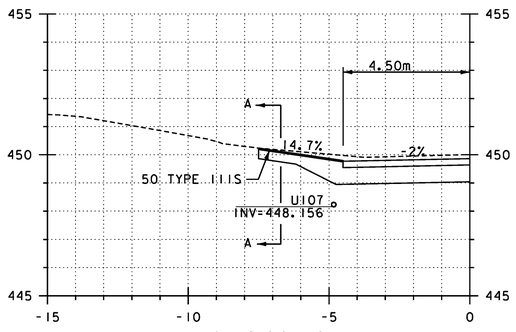

18+648.4
BIT. DRIVE, LT

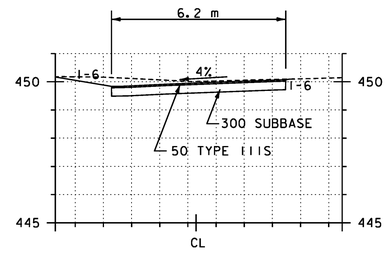

SECTION A-A

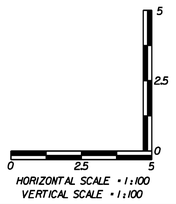

HORIZONTAL SCALE - 1:100
VERTICAL SCALE - 1:100

REPLACEMENT SHEETS ISSUED 02/24/12

STA 18+630 TO 18+660

PROJECT NAME: DANVILLE
PROJECT NUMBER: F EGC 028-3(32)

FILE NAME: ...\PlotFiles\I33 XS-US2_10m.ptf
DESIGN SUPERVISOR: GARY SANTY
DESIGNED BY: STANTEC
US ROUTE 2 CROSS SECTIONS - MLX-4

PLOT DATE: 2/24/2012
DRAWN BY: STANTEC
CHECKED BY: STANTEC
SHEET 228 OF 306

Stantec

2/24/2012 2:30:51 PM V:\1953\active\195360033_0092\Highways\PlotFiles\I33 XS-US2_10m.ptf

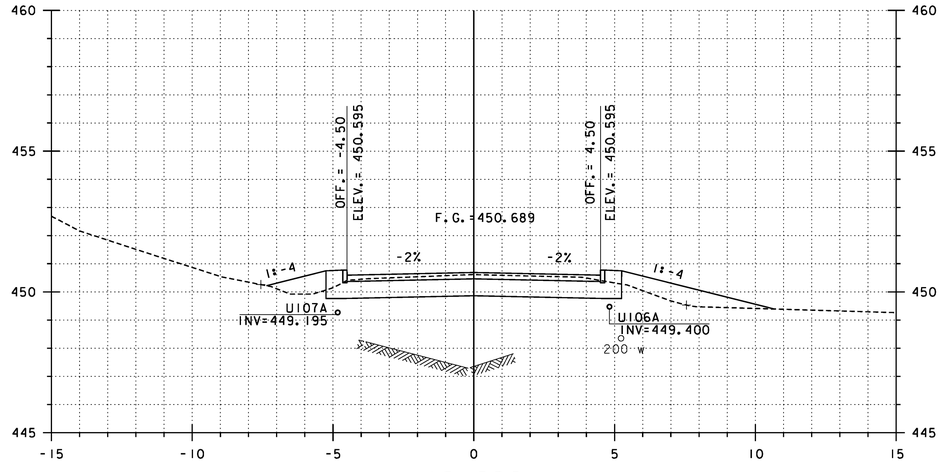

18+680

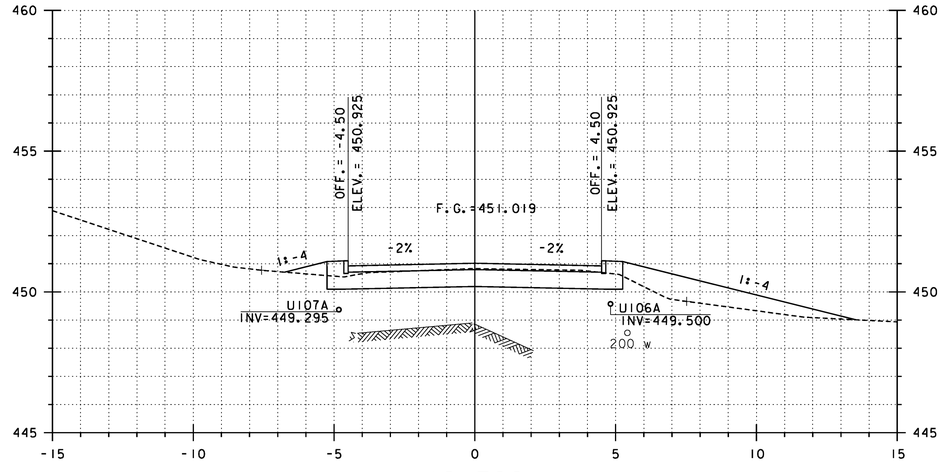

18+700

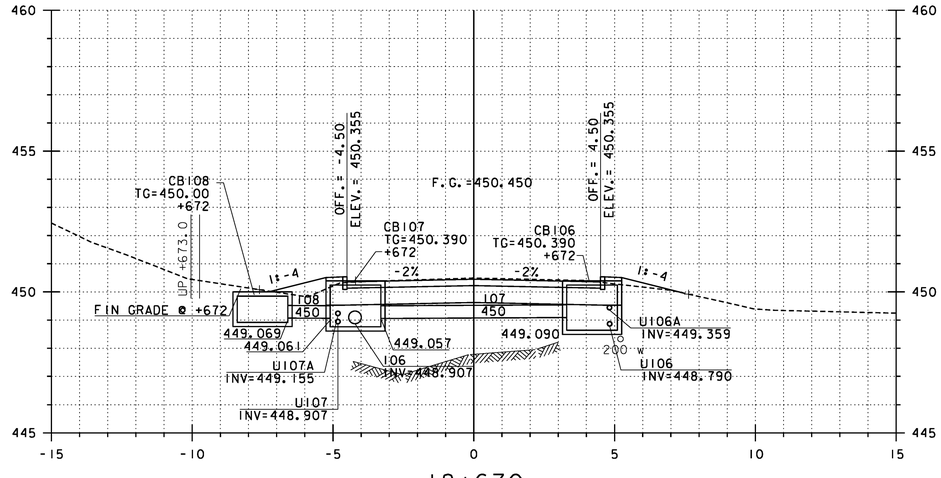

18+670

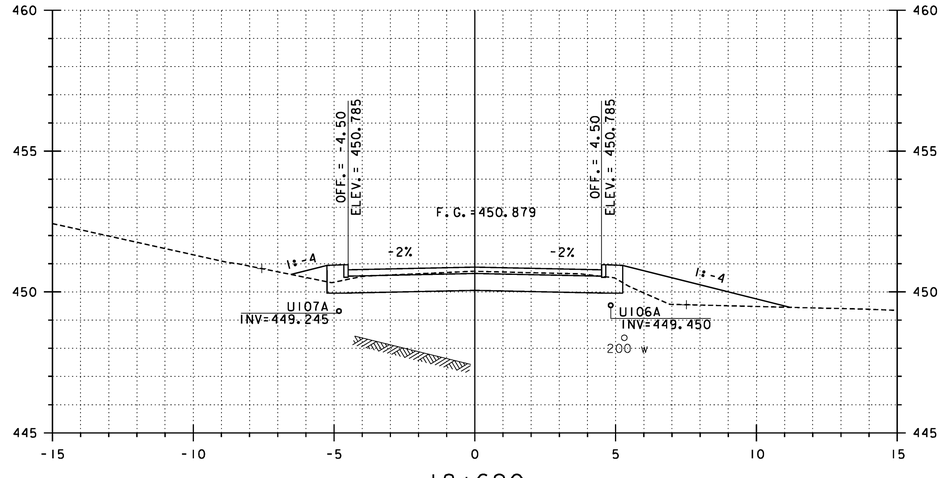

18+690

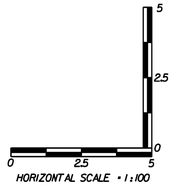

HORIZONTAL SCALE = 1:100
VERTICAL SCALE = 1:100

REPLACEMENT SHEETS ISSUED 02/24/12

STA 18+670 TO 18+700

PROJECT NAME: DANVILLE
PROJECT NUMBER: F EGC 028-3(32)

FILE NAME: ...\PlotFiles\133 XS-US2_10m.ptf
DESIGN SUPERVISOR: GARY SANTY
DESIGNED BY: STANTEC
US ROUTE 2 CROSS SECTIONS – MLX-5

PLOT DATE: 2/24/2012
DRAWN BY: STANTEC
CHECKED BY: STANTEC
SHEET 229 OF 306

Stantec

2/24/2012 2:30:52 PM V:\1953\active\195310033_10192\Highway\PlotFiles\133 XS-US2_10m.ptf

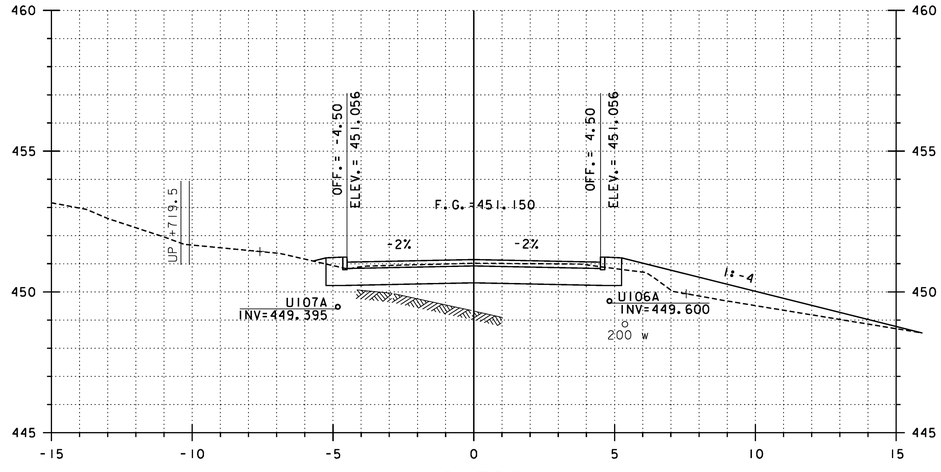

18+720

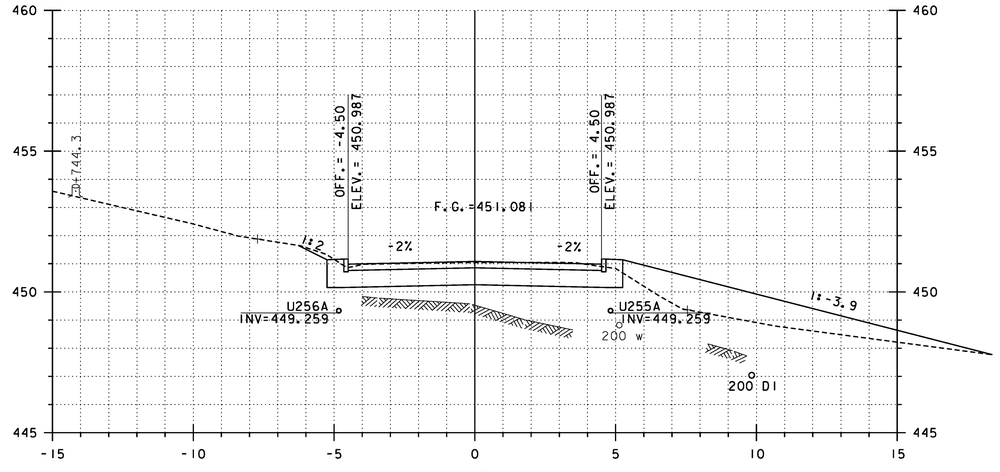

18+740

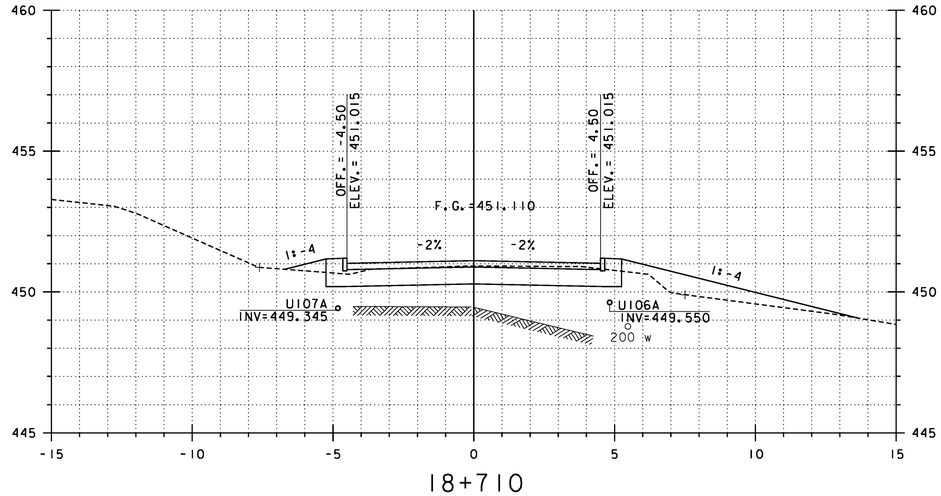

18+710

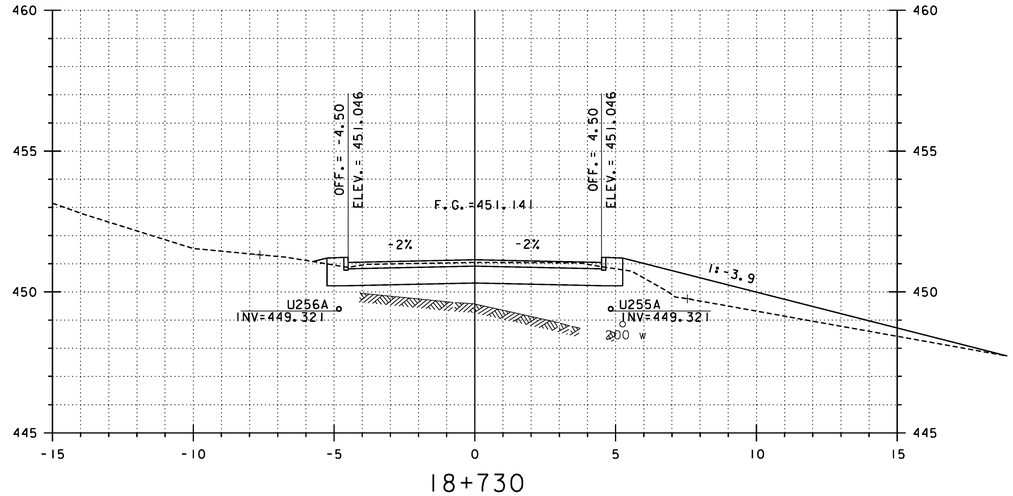

18+730

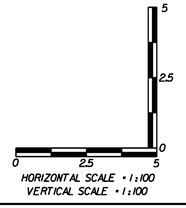

REPLACEMENT SHEETS ISSUED 02/24/12

STA 18+710 TO 18+740

PROJECT NAME: DANVILLE
PROJECT NUMBER: F EGC 028-3(32)

FILE NAME: ...\PlotFiles\133 XS-US2_10m.ptf
DESIGN SUPERVISOR: GARY SANTY
DESIGNED BY: STANTEC
US ROUTE 2 CROSS SECTIONS – MLX-6

PLOT DATE: 2/24/2012
DRAWN BY: STANTEC
CHECKED BY: STANTEC
SHEET 230 OF 306

2/24/2012 2:30:52 PM K:\953\active\953\0033.0092\Highway\PlotFiles\133 XS-US2_10m.ptf

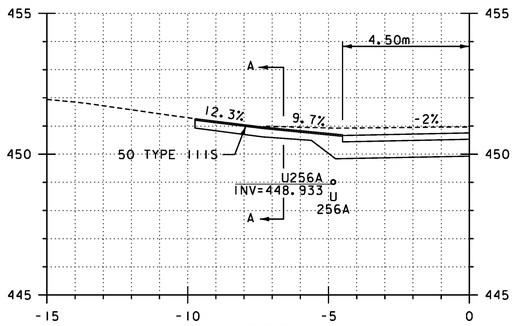

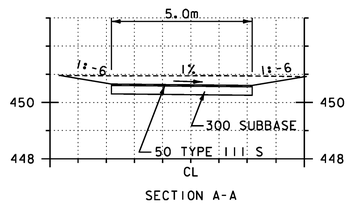

SECTION A-A

18+762.4
CONC. & GRAVEL DRIVE, LT

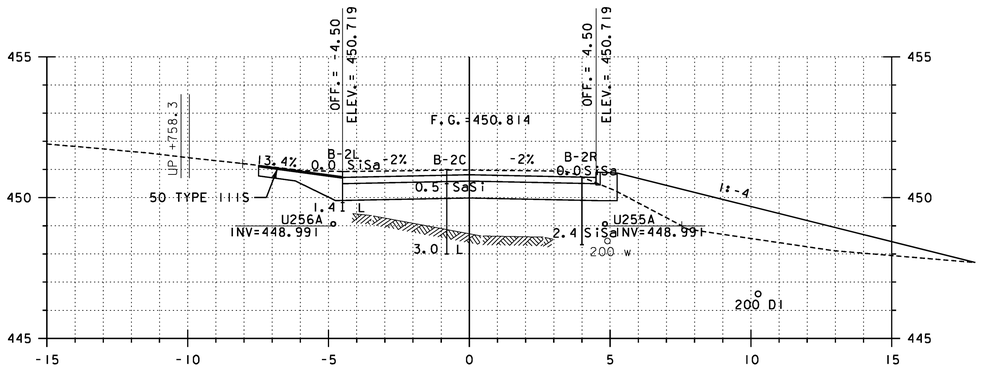

18+760

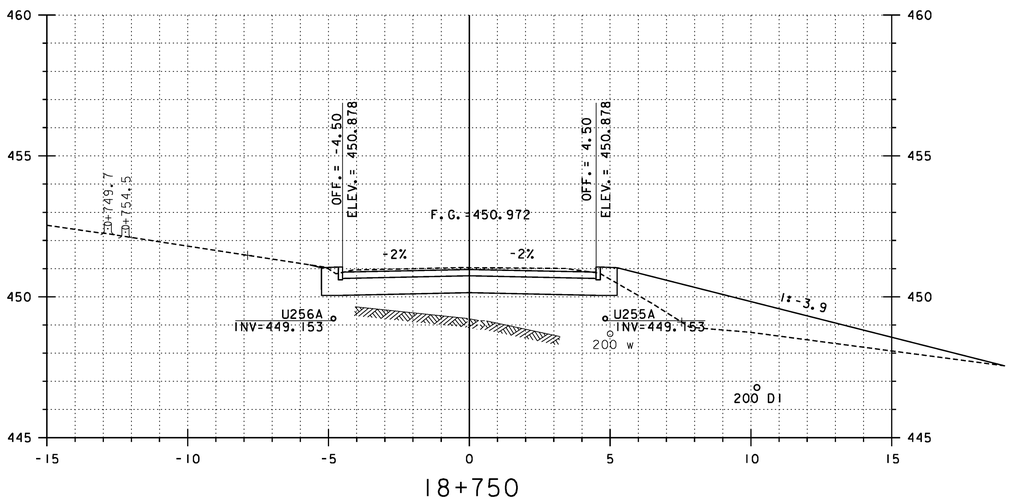

18+750

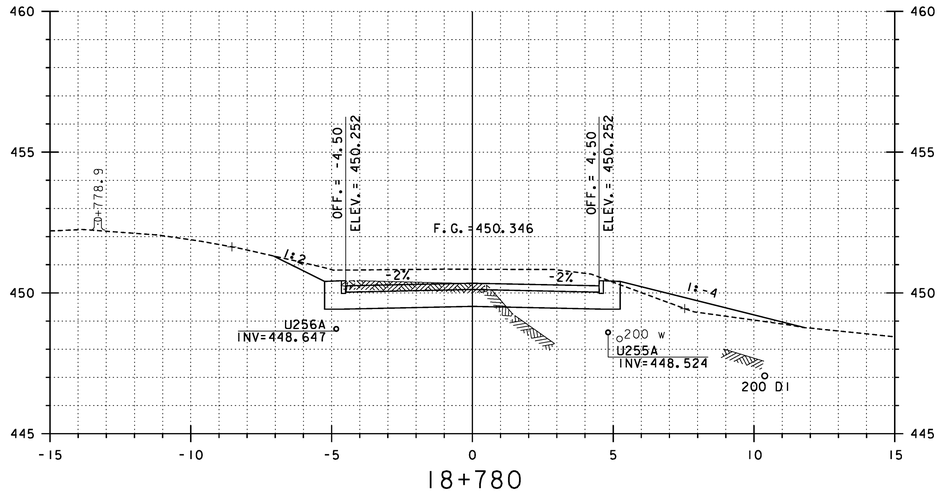

18+780

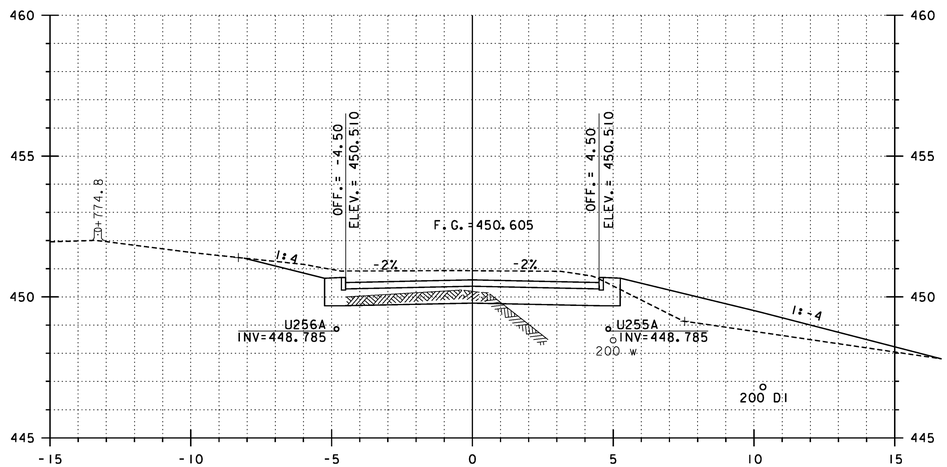

18+770

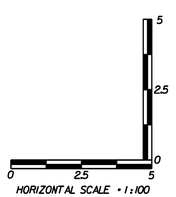

HORIZONTAL SCALE - 1:100
VERTICAL SCALE - 1:100

REPLACEMENT SHEETS ISSUED 02/24/12

STA 18+750 TO 18+780

PROJECT NAME: DANVILLE
PROJECT NUMBER: F EGC 028-3(32)

FILE NAME: ...\PlotFiles\133 XS-US2_10m.ptf
DESIGN SUPERVISOR: GARY SANTY
DESIGNED BY: STANTEC
US ROUTE 2 CROSS SECTIONS - MLX-7

PLOT DATE: 2/24/2012
DRAWN BY: STANTEC
CHECKED BY: STANTEC
SHEET 231 OF 306

2/24/2012 2:30:53 PM V:\1953\active\95300033.0092\Highway\PlotFiles\133 XS-US2_10m.ptf

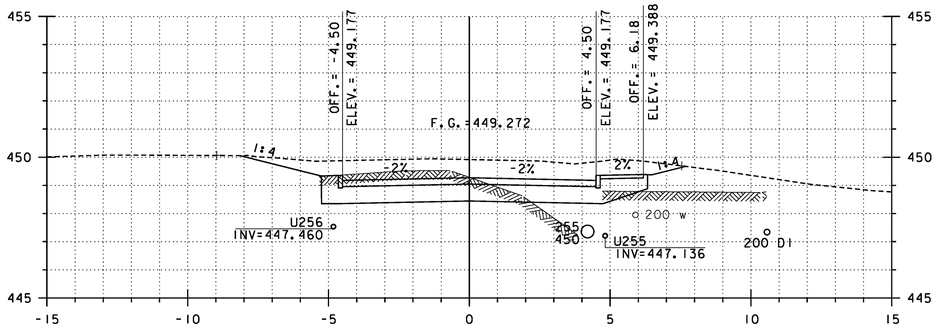

18+810

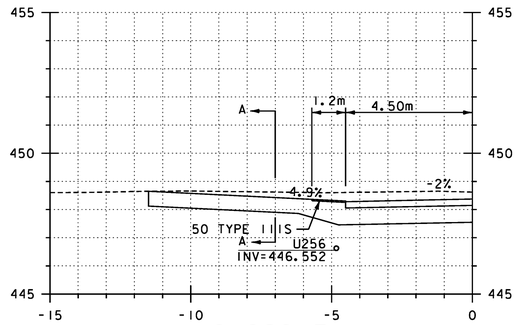

18+828.7
GRAVEL, LT

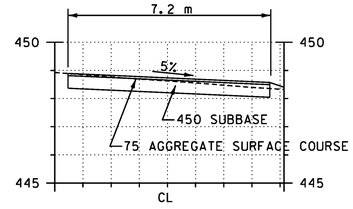

SECTION A-A

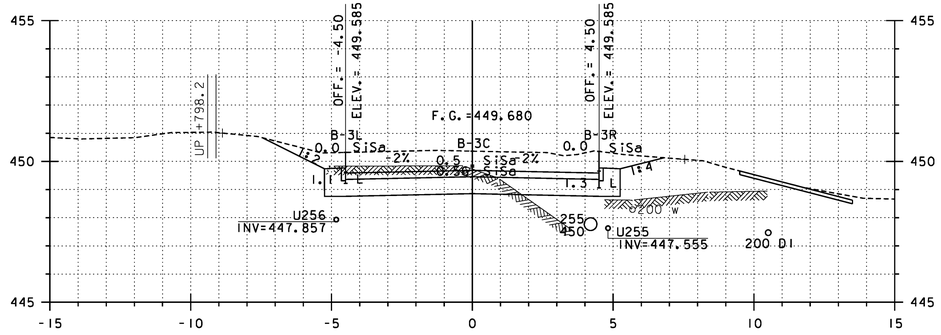

18+800

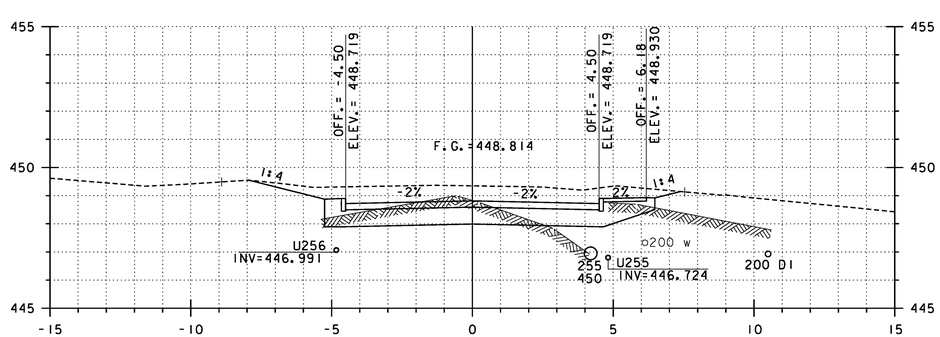

18+820

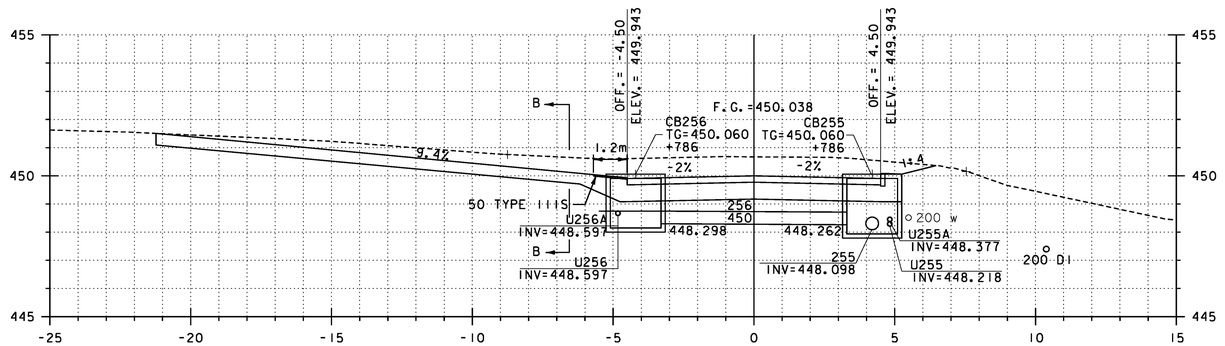

18+790

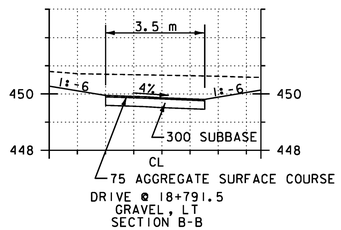

DRIVE @ 18+791.5
GRAVEL, LT
SECTION B-B

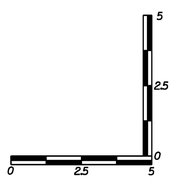

HORIZONTAL SCALE = 1:100
VERTICAL SCALE = 1:100

REPLACEMENT SHEETS ISSUED 02/24/12

STA 18+790 TO 18+828.7

PROJECT NAME: DANVILLE	
PROJECT NUMBER: F EGC 028-3(32)	
FILE NAME: ...\PlotFiles\133 XS-US2_10m.ptf	PLOT DATE: 2/24/2012
DESIGN SUPERVISOR: GARY SANTY	DRAWN BY: STANTEC
DESIGNED BY: STANTEC	CHECKED BY: STANTEC
US ROUTE 2 CROSS SECTIONS – MLX-8	SHEET 232 OF 306

Stantec

2/24/2012 2:30:54 PM V:\1953\active\195310033_10192\Highway\PlotFiles\133 XS-US2_10m.ptf

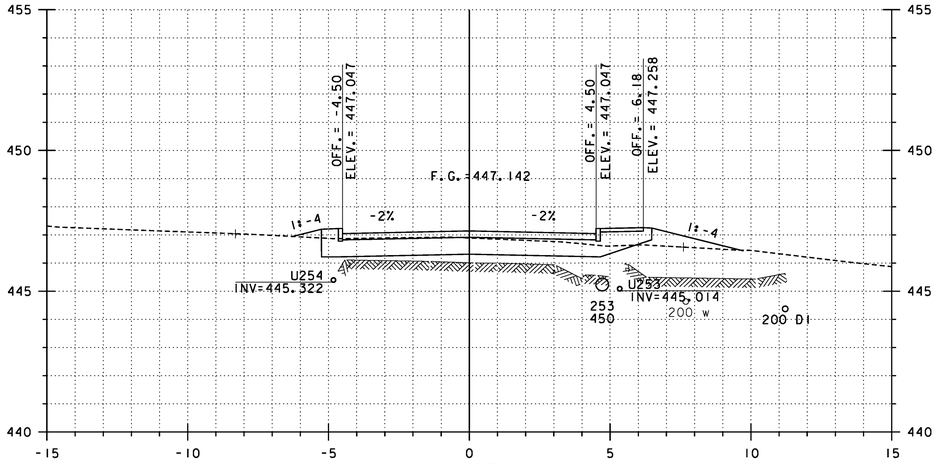

18+850

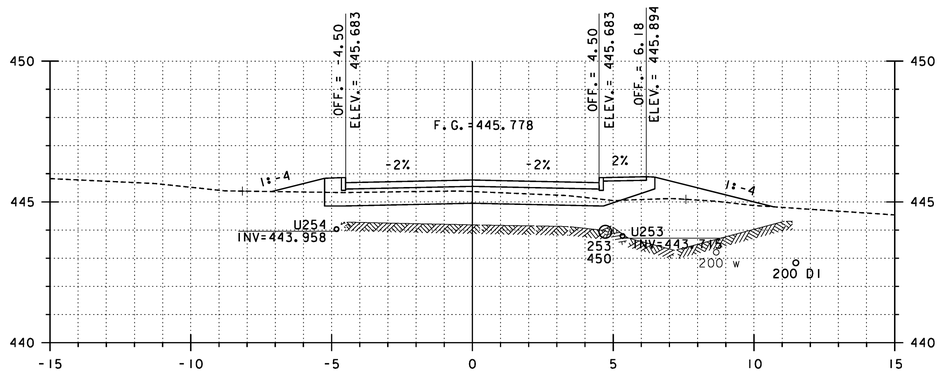

18+870

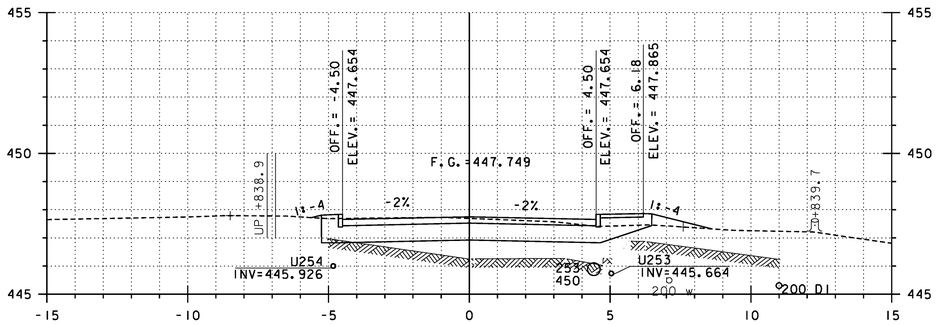

18+840

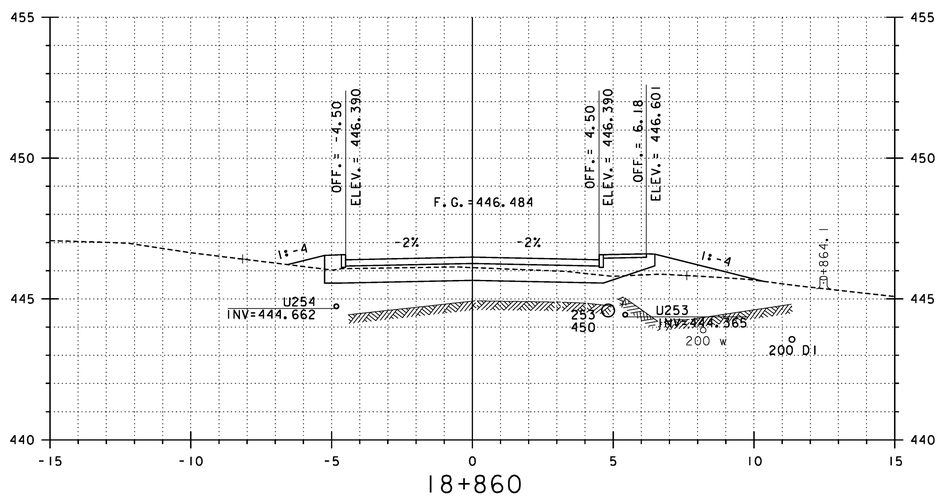

18+860

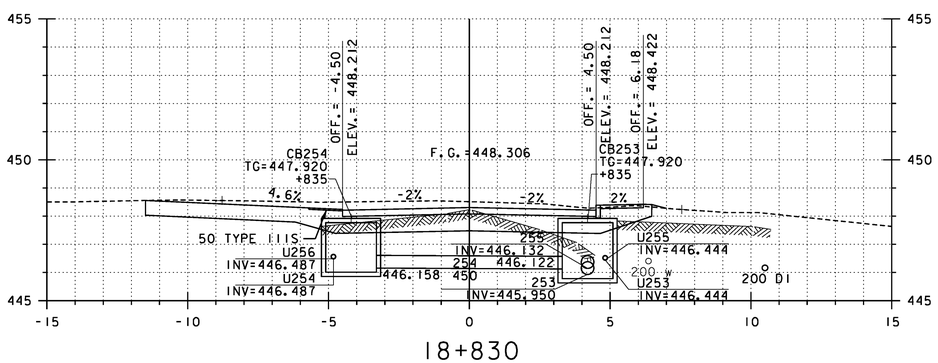

18+830

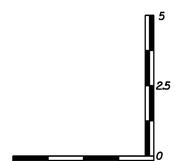

REPLACEMENT SHEETS ISSUED 02/24/12

STA 18+830 TO 18+870

PROJECT NAME: DANVILLE
PROJECT NUMBER: F EGC 028-3(32)

FILE NAME: ...\PlotFiles\133 XS-US2_10m.ptf
DESIGN SUPERVISOR: GARY SANTY
DESIGNED BY: STANTEC
US ROUTE 2 CROSS SECTIONS – MLX-9

PLOT DATE: 2/24/2012
DRAWN BY: STANTEC
CHECKED BY: STANTEC
SHEET 233 OF 306

2/24/2012 2:30:55 PM V:\053\active\053030033.0092\Highway\PlotFiles\133 XS-US2_10m.ptf

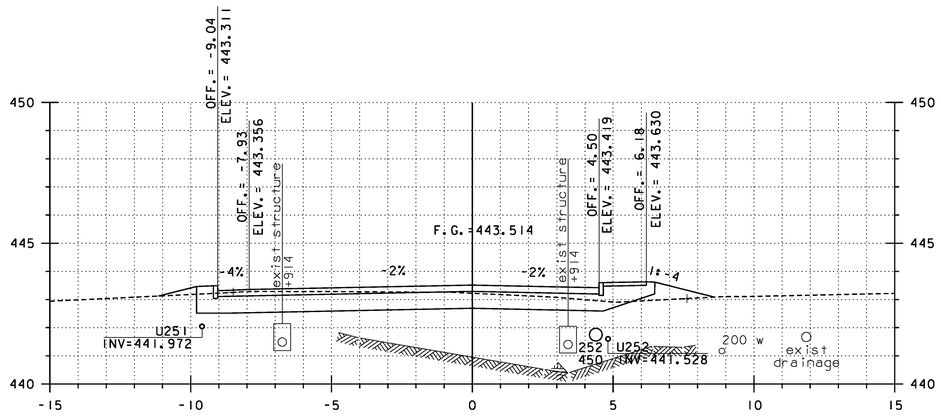

18+900

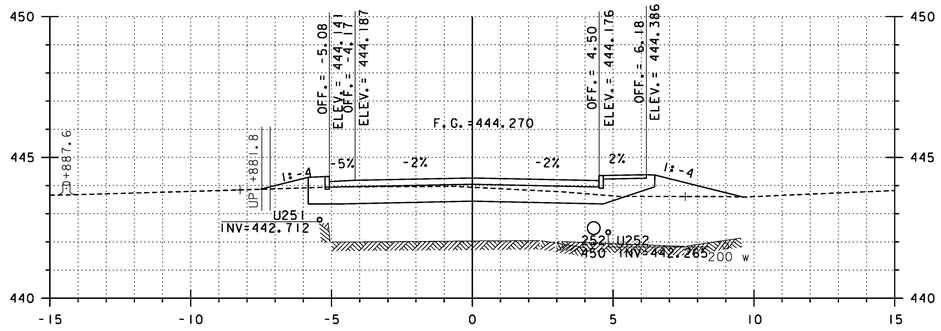

18+890

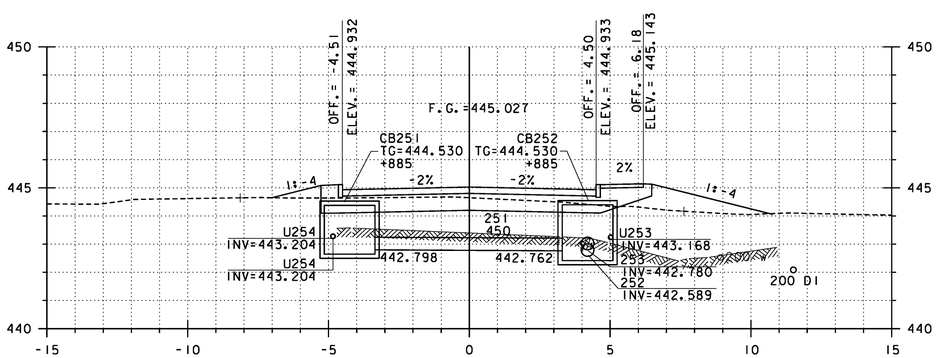

18+880

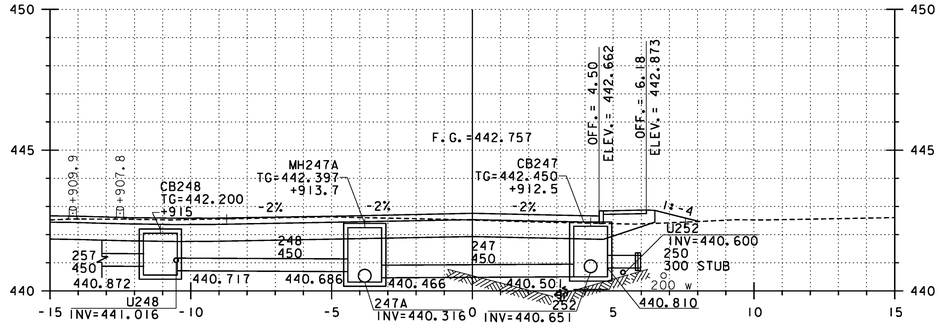

18+910

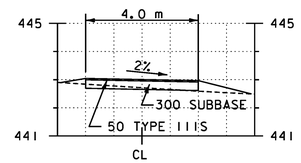

SECTION A-A

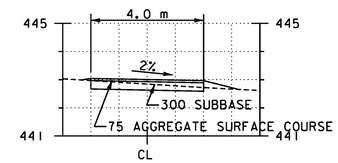

SECTION B-B

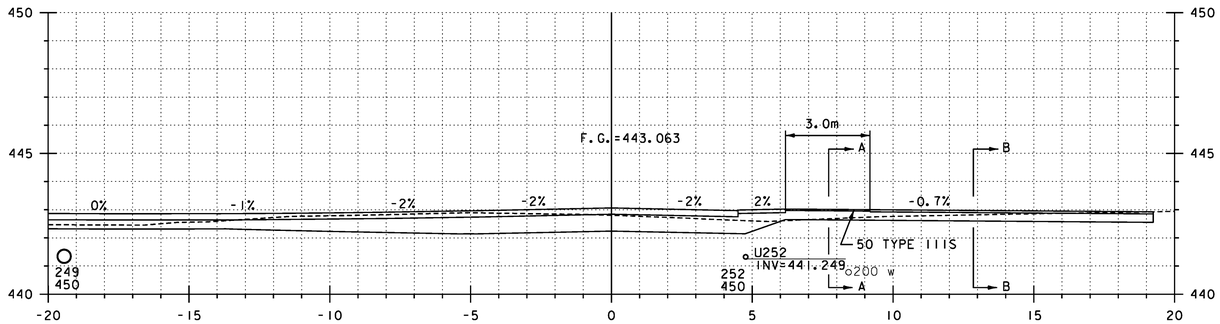

18+906.0
GRAVEL, RT

U.S. ROUTE 2 STA. 18+905.941=
WALDEN HILL ROAD STA. 1+000.000
INTERSECTION LEFT

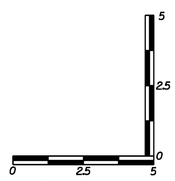

HORIZONTAL SCALE = 1:100
VERTICAL SCALE = 1:100

REPLACEMENT SHEETS ISSUED 02/24/12

STA 18+880 TO 18+910

PROJECT NAME: DANVILLE	
PROJECT NUMBER: F EGC 028-3(32)	
FILE NAME: ...\PlotFiles\133 XS-US2_10m.ptf	PLOT DATE: 2/24/2012
DESIGN SUPERVISOR: GARY SANTY	DRAWN BY: STANTEC
DESIGNED BY: STANTEC	CHECKED BY: STANTEC
US ROUTE 2 CROSS SECTIONS – MLX-10	SHEET 234 OF 306

Stantec

2/24/2012 2:30:55 PM V:\1953\active\195310033_10192\Highway\PlotFiles\133 XS-US2_10m.ptf

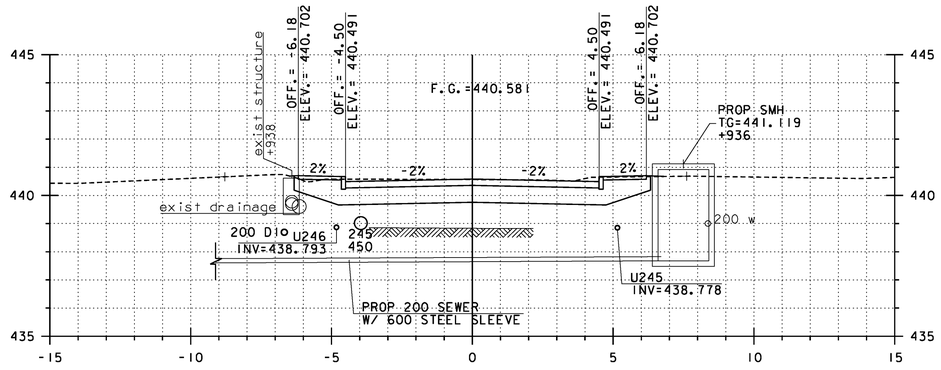

18+940

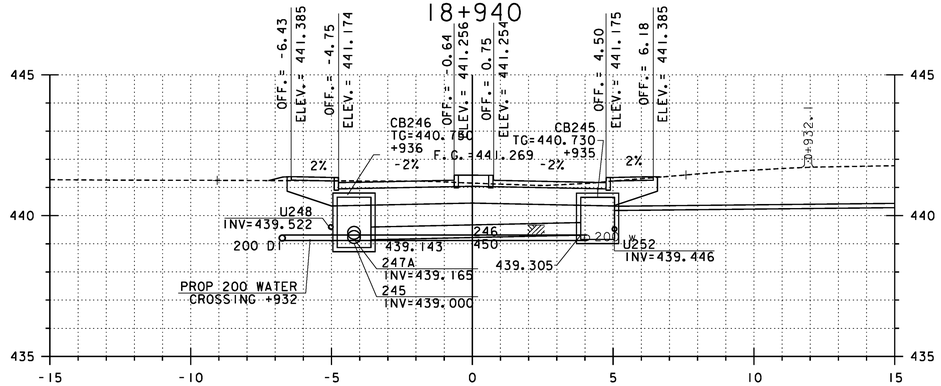

18+930

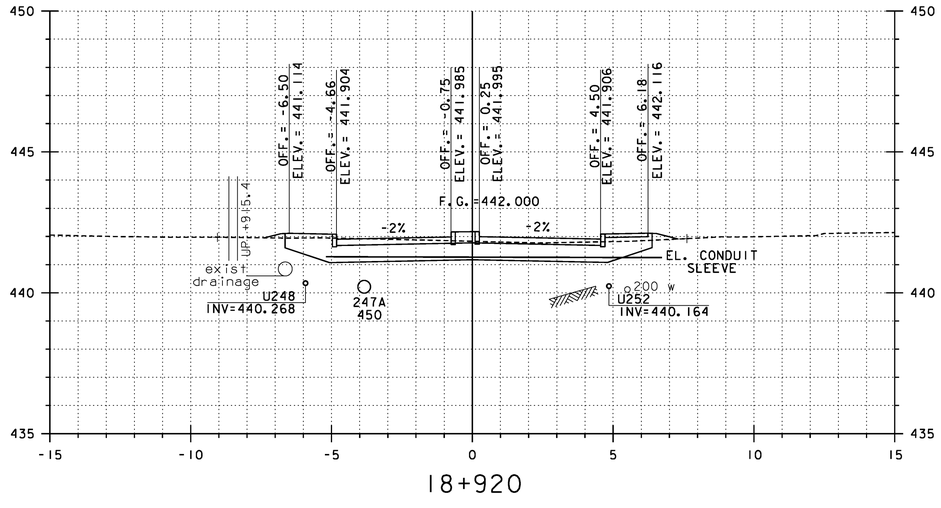

18+920

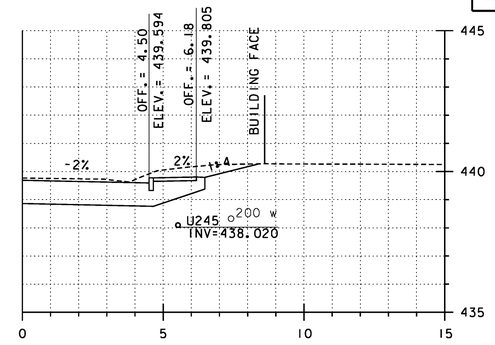

18+954

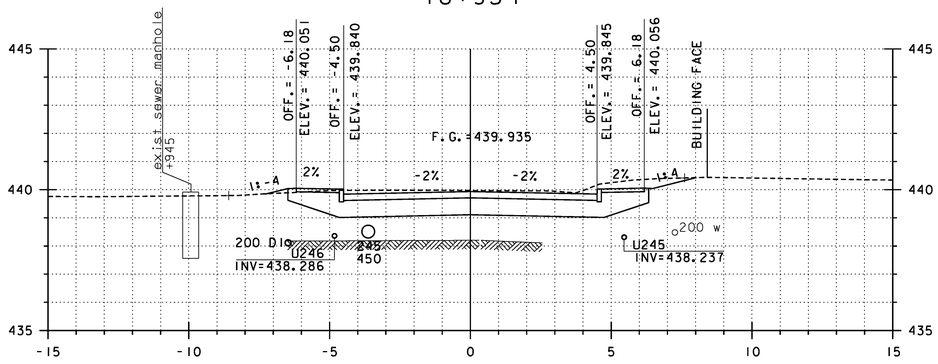

18+950

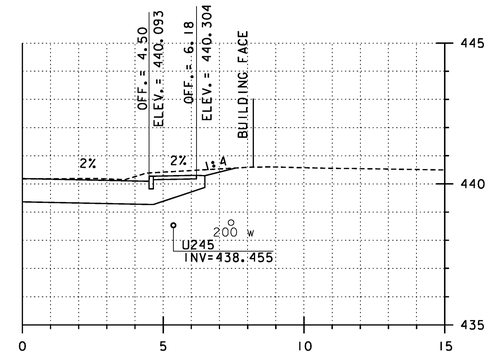

18+946

REPLACEMENT SHEETS ISSUED 02/24/12

STA 18+920 TO 18+954

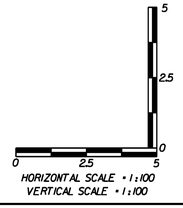

Stantec

PROJECT NAME: DANVILLE	
PROJECT NUMBER: F EGC 028-3(32)	
FILE NAME: ...\PlotFiles\133 XS-US2_10m.ptf	PLOT DATE: 2/24/2012
DESIGN SUPERVISOR: GARY SANTY	DRAWN BY: STANTEC
DESIGNED BY: STANTEC	CHECKED BY: STANTEC
US ROUTE 2 CROSS SECTIONS – MLX-11	SHEET 235 OF 306

2/24/2012 2:30:56 PM V:\1953\active\1953003.0092\Highway\PlotFiles\133 XS-US2_10m.ptf

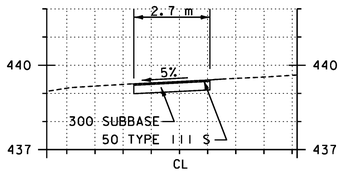

SECTION A-A

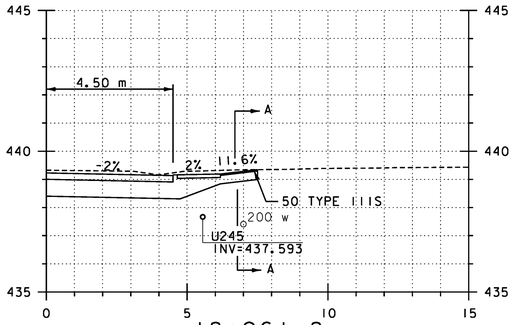

18+961.8
BIT., RT

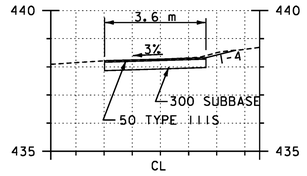

SECTION B-B

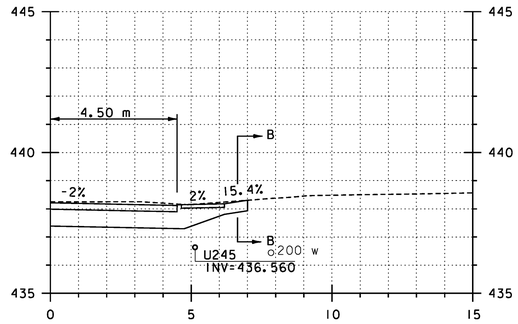

18+980.8
BIT., RT

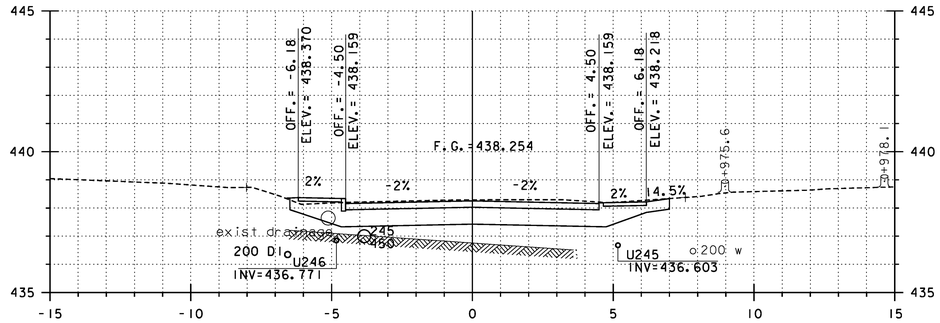

18+980

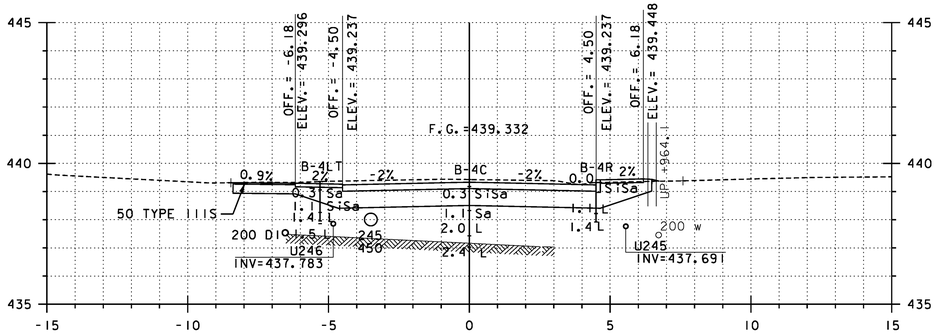

18+960

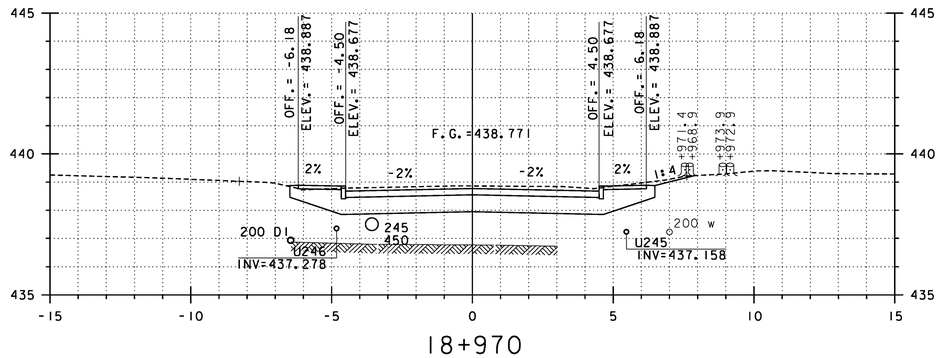

18+970

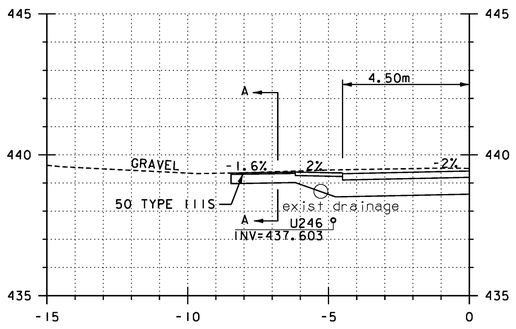

18+958.4
BIT., LT

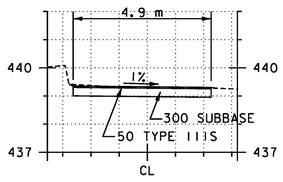

SECTION A-A

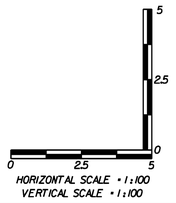

HORIZONTAL SCALE - 1:100
VERTICAL SCALE - 1:100

REPLACEMENT SHEETS ISSUED 02/24/12

STA 18+958.4 TO 18+980.8

PROJECT NAME: DANVILLE
PROJECT NUMBER: F EGC 028-3(32)

FILE NAME: ...\PlotFiles\133 XS-US2_10m.ptf
DESIGN SUPERVISOR: GARY SANTY
DESIGNED BY: STANTEC
US ROUTE 2 CROSS SECTIONS - MLX-12

PLOT DATE: 2/24/2012
DRAWN BY: STANTEC
CHECKED BY: STANTEC
SHEET 236 OF 306

Stantec

2/24/2012 2:30:57 PM V:\1953\active\195300033_0092\Highways\PlotFiles\133 XS-US2_10m.ptf

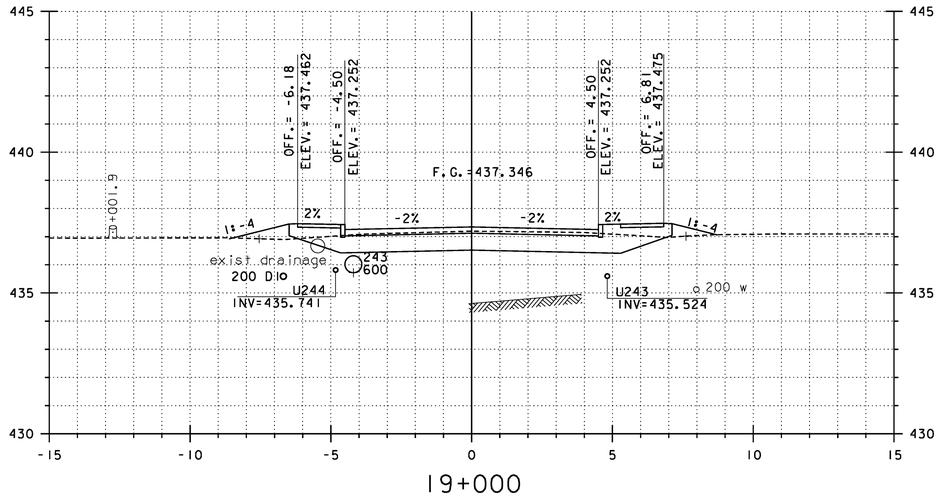

19+000

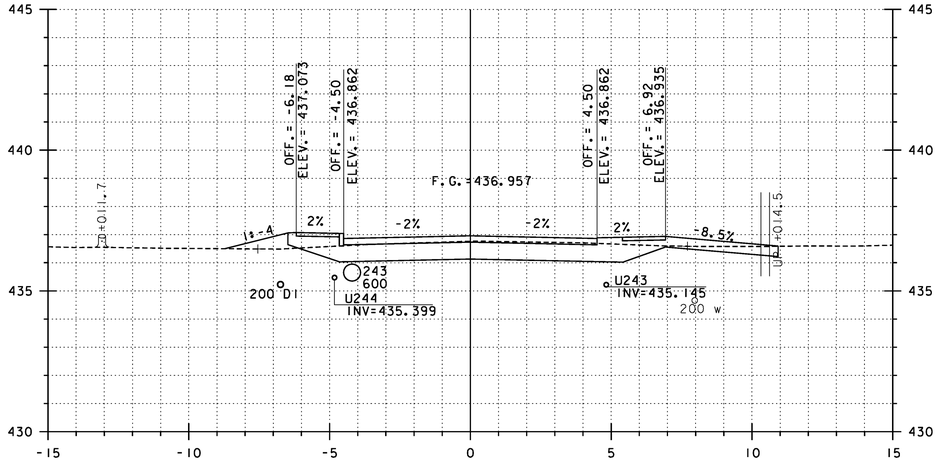

19+010

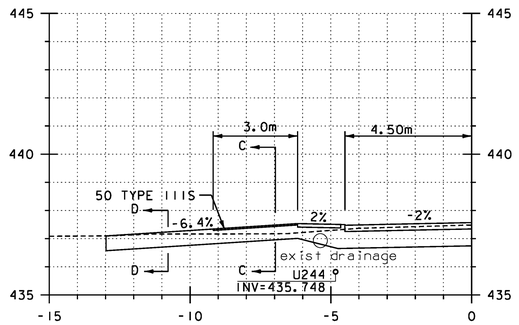

18+994.7
GRAVEL , LT

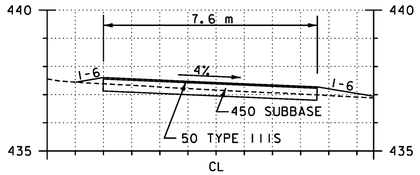

SECTION C-C

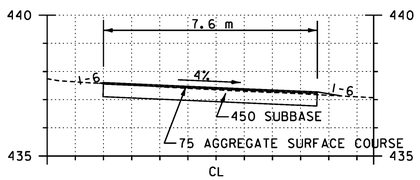

SECTION D-D

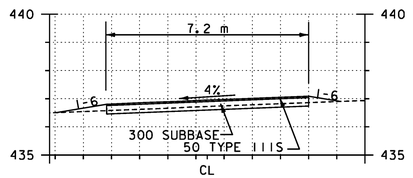

SECTION A-A

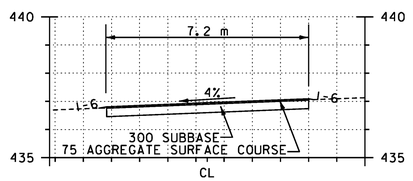

SECTION B-B

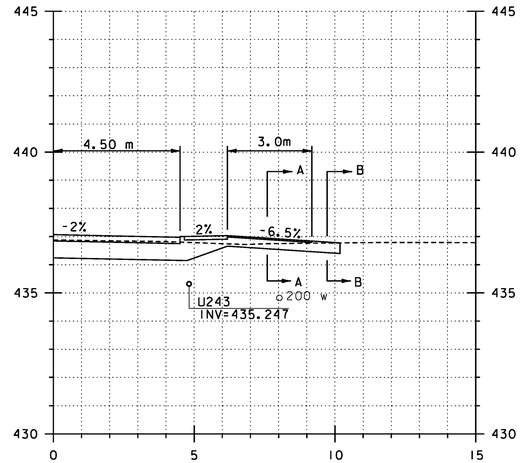

19+007.0
GRAVEL , RT

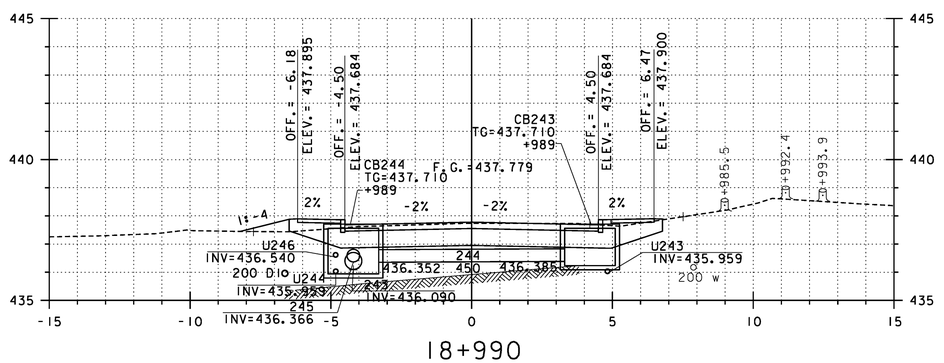

18+990

HORIZONTAL SCALE • 1:100
VERTICAL SCALE • 1:100

REPLACEMENT SHEETS ISSUED 02/24/12

STA 18+990 TO 19+010

PROJECT NAME: DANVILLE
PROJECT NUMBER: F EGC 028-3(32)

FILE NAME: ...\PlotFiles\I33 XS-US2_10m.ptf
DESIGN SUPERVISOR: GARY SANTY
DESIGNED BY: STANTEC
US ROUTE 2 CROSS SECTIONS – MLX-13

PLOT DATE: 2/24/2012
DRAWN BY: STANTEC
CHECKED BY: STANTEC
SHEET 237 OF 306

2/24/2012 2:30:58 PM V:\053\active\95300033.002\Highway\PlotFiles\I33 XS-US2_10m.ptf

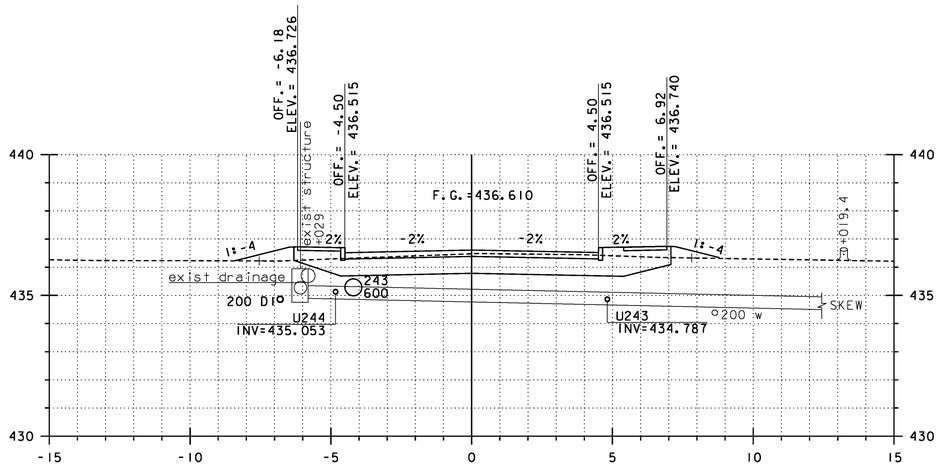

19+020

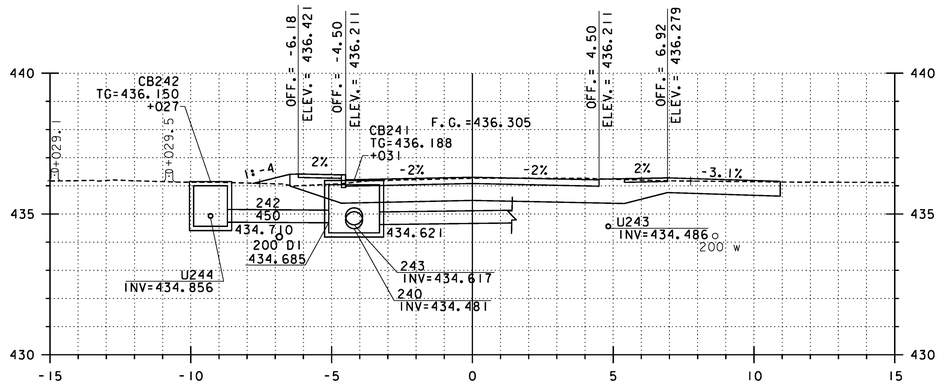

19+030

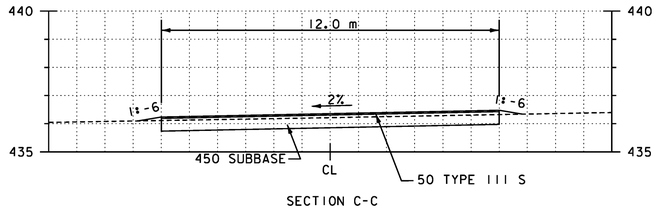

SECTION C-C

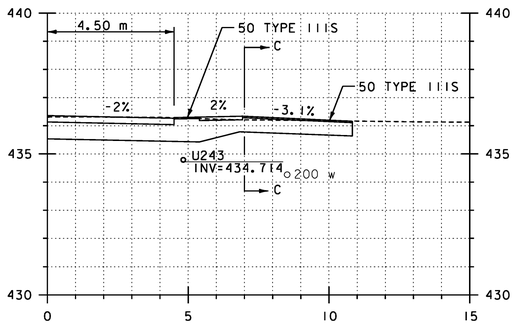

19+030.5
BIT., RT

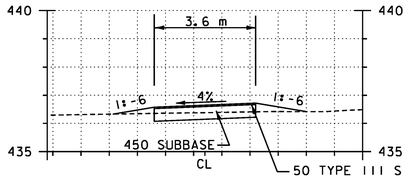

SECTION B-B

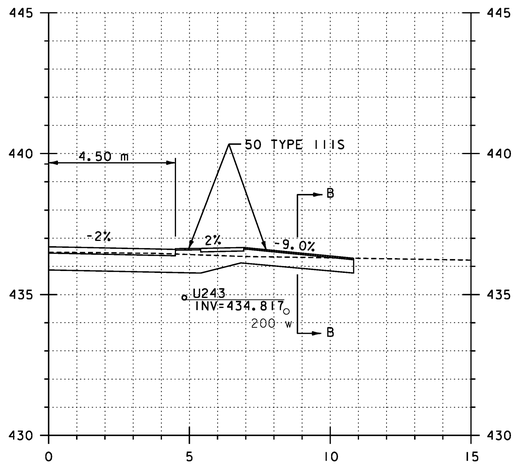

19+017.3
BIT., RT

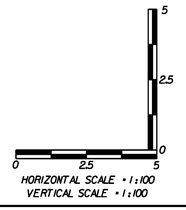

HORIZONTAL SCALE - 1:100
VERTICAL SCALE - 1:100

REPLACEMENT SHEETS ISSUED 02/24/12

STA 19+017.3 TO 19+030

PROJECT NAME: DANVILLE
PROJECT NUMBER: F EGC 028-3(32)

FILE NAME: ...\PlotFiles\133 XS-US2_10m.ptf
DESIGN SUPERVISOR: GARY SANTY
DESIGNED BY: STANTEC
US ROUTE 2 CROSS SECTIONS - MLX-14

PLOT DATE: 2/24/2012
DRAWN BY: STANTEC
CHECKED BY: STANTEC
SHEET 238 OF 306

Stantec

2/24/202 2:30:58 PM V:\1953\active\195300033_0092\Highway\PlotFiles\133 XS-US2_10m.ptf

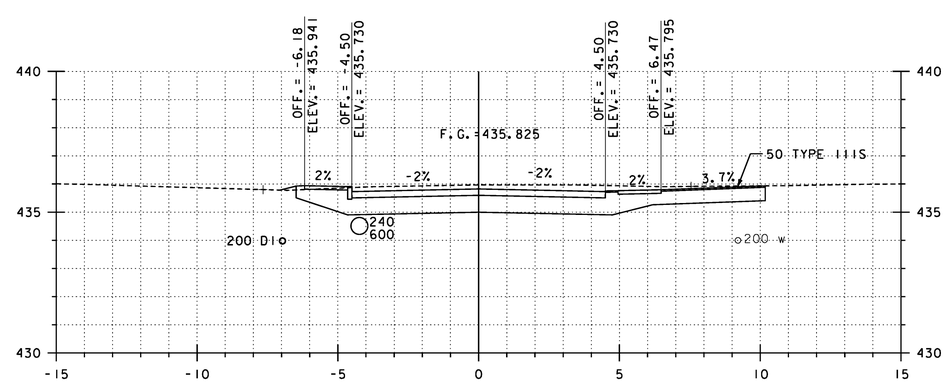

19+050

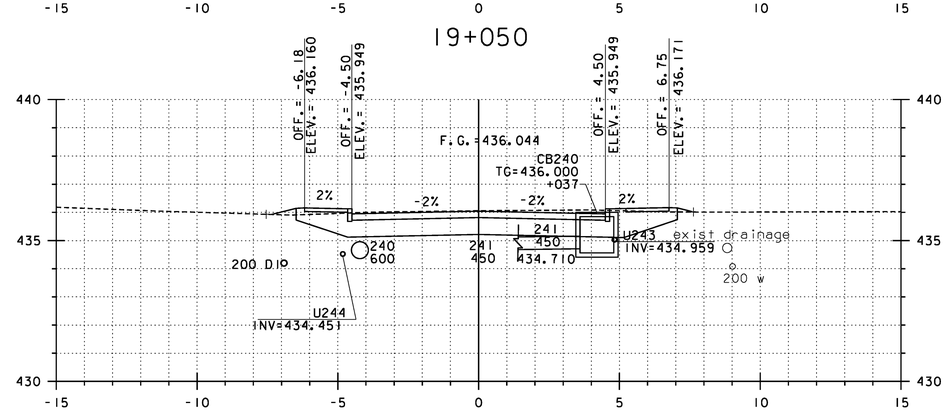

19+040

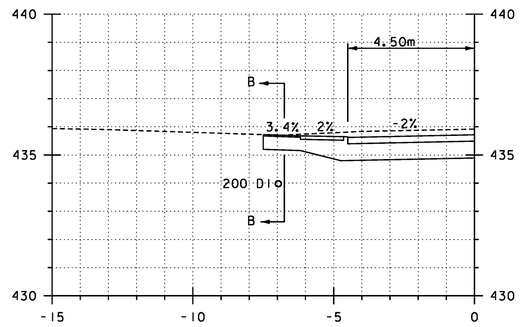

19+055.8
BIT., LT

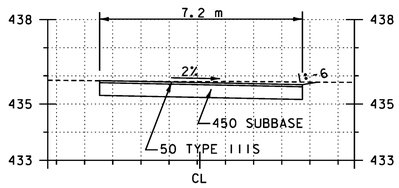

SECTION B-B

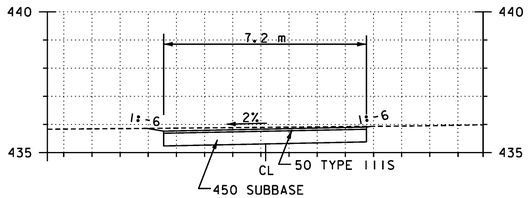

SECTION A-A

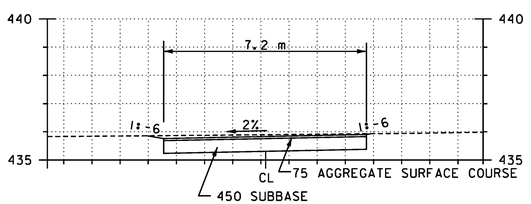

SECTION B-B

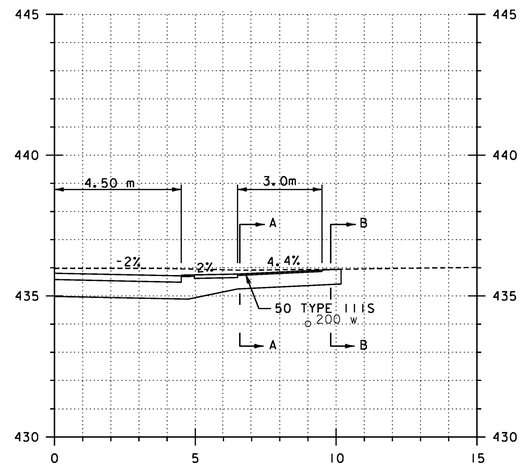

19+048.4
GRAVEL, RT

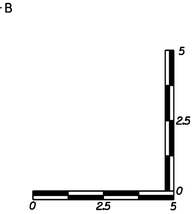

REPLACEMENT SHEETS ISSUED 02/24/12

STA 19+040 TO 19+055.8

PROJECT NAME: DANVILLE
PROJECT NUMBER: F EGC 028-3(32)

FILE NAME: ...\PlotFiles\133 XS-US2_10m.ptf
DESIGN SUPERVISOR: GARY SANTY
DESIGNED BY: STANTEC
US ROUTE 2 CROSS SECTIONS – MLX-15

PLOT DATE: 2/24/2012
DRAWN BY: STANTEC
CHECKED BY: STANTEC
SHEET 239 OF 306

Stantec

2/24/2012 2:30:59 PM V:\1953\active\195310033_10192\Highway\PlotFiles\133 XS-US2_10m.ptf

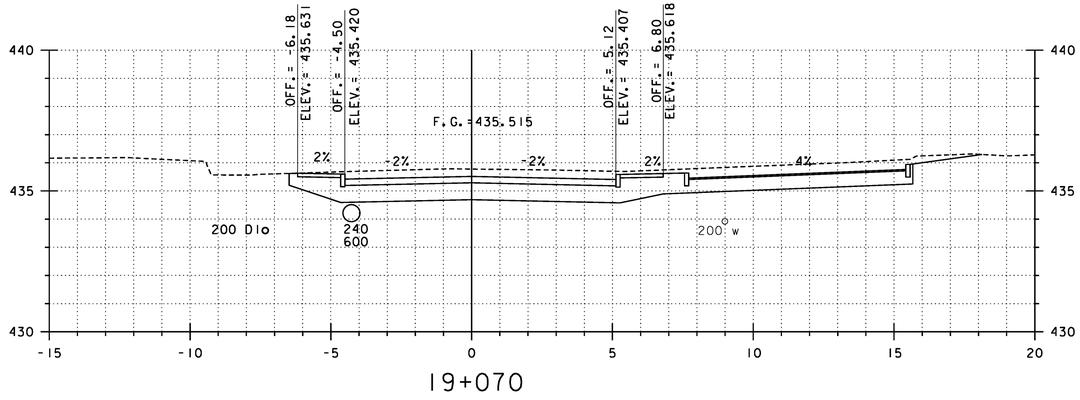

19+070

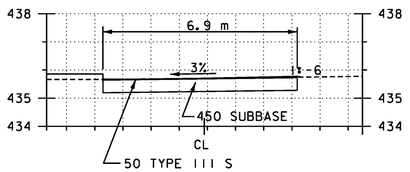

SECTION A-A

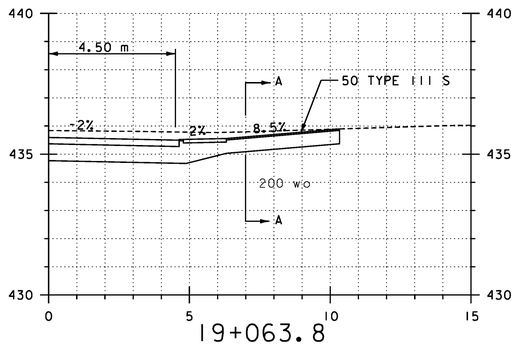

19+063.8
BIT., RT

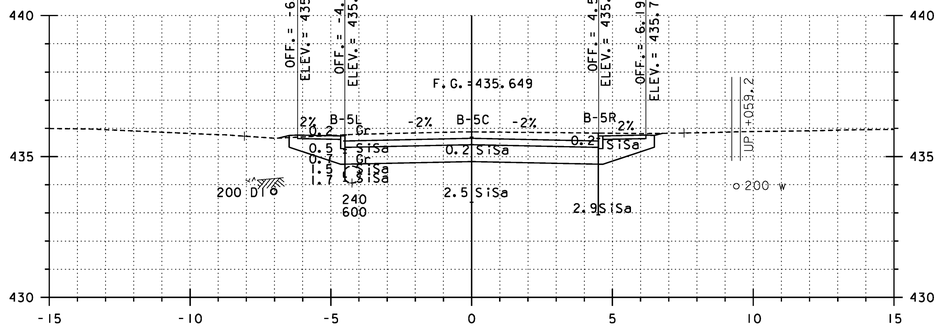

19+060

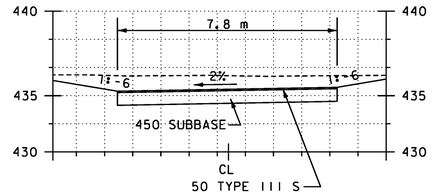

DRIVE @ 19+079.4
BIT., RT
SECTION B-B

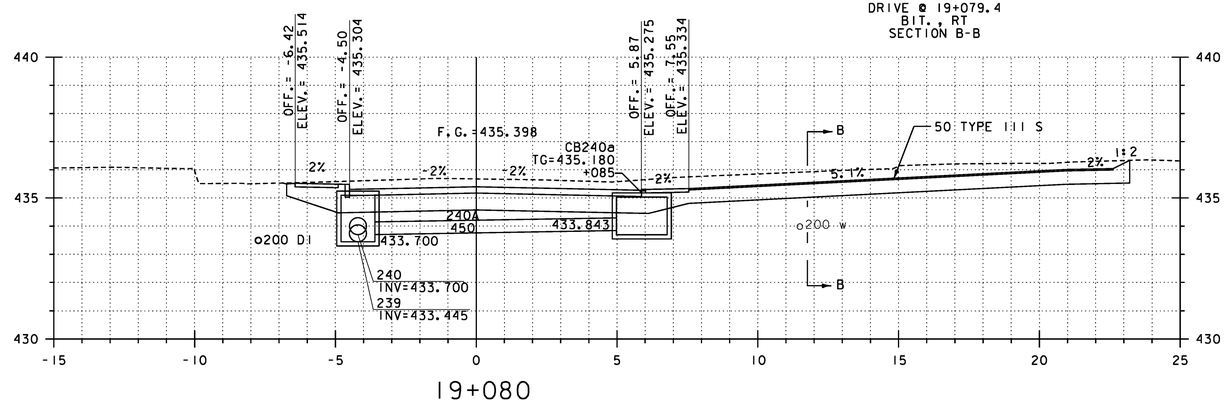

19+080

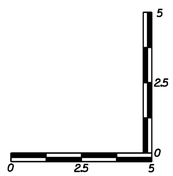

HORIZONTAL SCALE = 1:100
VERTICAL SCALE = 1:100

REPLACEMENT SHEETS
ISSUED 02/24/12

STA 19+060 TO 19+080

PROJECT NAME: DANVILLE	
PROJECT NUMBER: F EGC 028-3(32)	
FILE NAME: ...\PlotFiles\133 XS-US2_10m.ptf	PLOT DATE: 2/24/2012
DESIGN SUPERVISOR: GARY SANTY	DRAWN BY: STANTEC
DESIGNED BY: STANTEC	CHECKED BY: STANTEC
US ROUTE 2 CROSS SECTIONS – MLX-16	SHEET 240 OF 306

Stantec

2/24/2012 2:31:00 PM V:\1953\active\195310033_10192\Highway\PlotFiles\133 XS-US2_10m.ptf

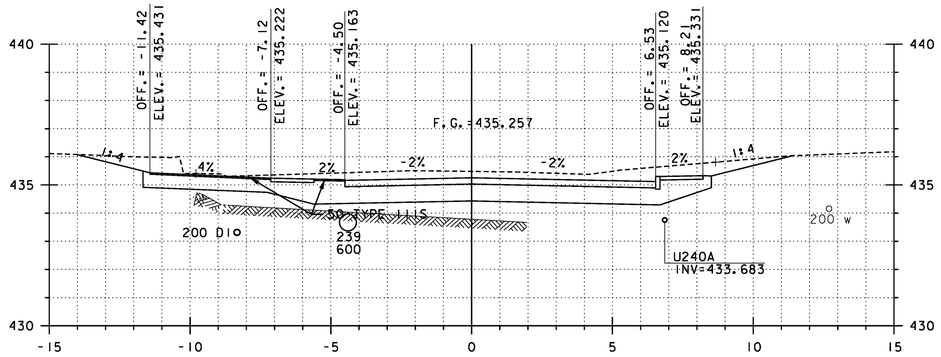

19+090

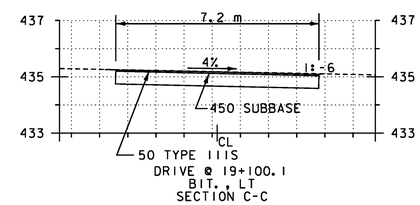

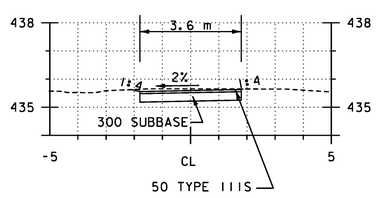

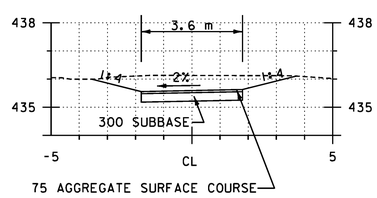

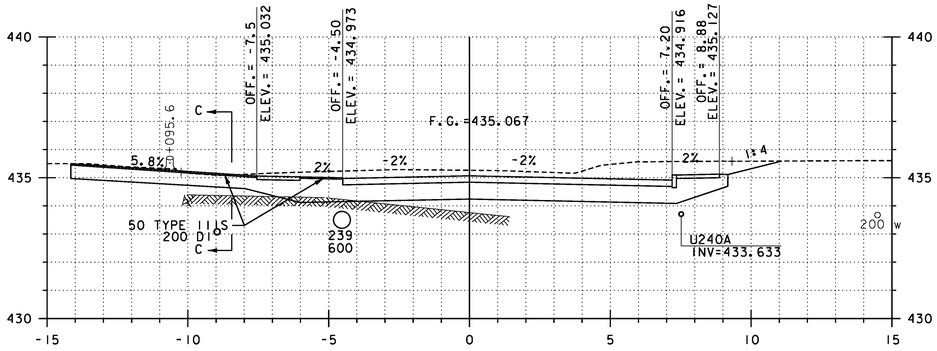

19+100

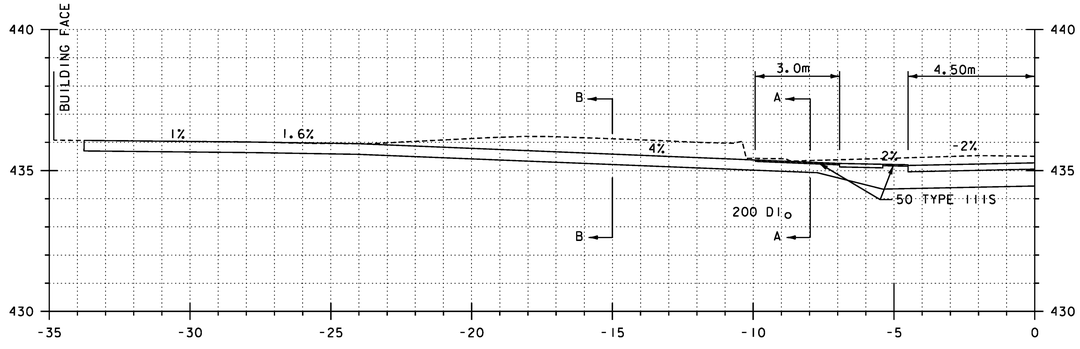

19+088.2
GRAVEL, LT

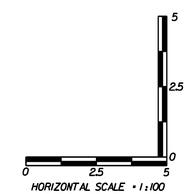

HORIZONTAL SCALE = 1:100
VERTICAL SCALE = 1:100

REPLACEMENT SHEETS
ISSUED 02/24/12

STA 19+088.2 TO 19+100

PROJECT NAME: DANVILLE
PROJECT NUMBER: F EGC 028-3(32)

FILE NAME: ...\PlotFiles\133 XS-US2_10m.ptf
DESIGN SUPERVISOR: GARY SANTY
DESIGNED BY: STANTEC
US ROUTE 2 CROSS SECTIONS – MLX-17

PLOT DATE: 2/24/2012
DRAWN BY: STANTEC
CHECKED BY: STANTEC
SHEET 241 OF 306

Stantec

2/24/2012 2:31:00 PM V:\1953\active\195310033_10192\Highway\PlotFiles\133 XS-US2_10m.ptf

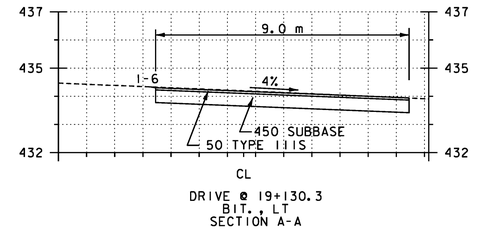

DRIVE @ 19+130.3
BIT. , LT
SECTION A-A

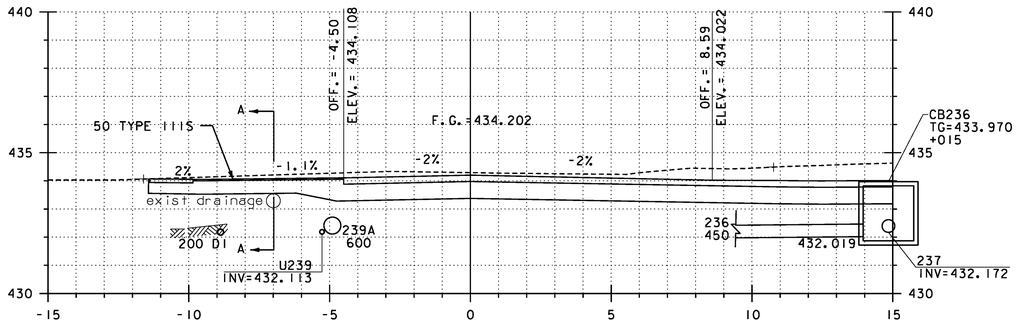

19+130

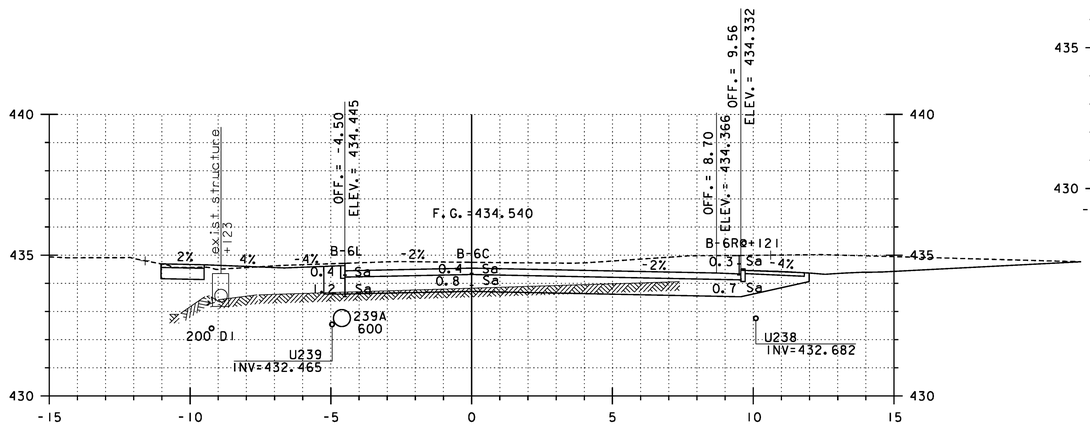

19+120

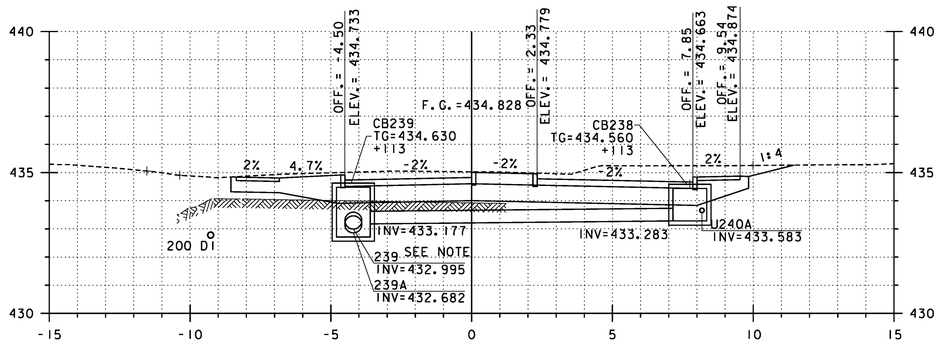

19+110

U.S. ROUTE 2 STA. 19.126.333=
PARK STREET STA. 2+000.000
INTERSECTION RIGHT

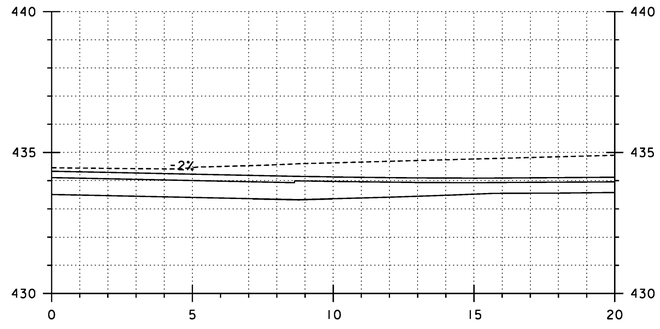

19+126.333

NOTE:
SEE FIRE DISTRICT WATER PLAN
FD-06 FOR WATER LINE/DRAINAGE
CONFLICT RESOLUTION.

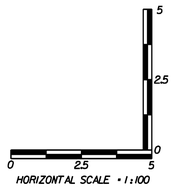

HORIZONTAL SCALE • 1:100
VERTICAL SCALE • 1:100

REPLACEMENT SHEETS ISSUED 02/24/12

STA 19+110 TO 19+130

PROJECT NAME: DANVILLE
PROJECT NUMBER: F EGC 028-3(32)

FILE NAME: ...\PlotFiles\133 XS-US2_10m.ptf
DESIGN SUPERVISOR: GARY SANTY
DESIGNED BY: STANTEC
US ROUTE 2 CROSS SECTIONS – MLX-18

PLOT DATE: 2/24/2012
DRAWN BY: STANTEC
CHECKED BY: STANTEC
SHEET 242 OF 306

Stantec

2/24/2012 2:34:01 PM V:\1953\active\195310033.1092\Highways\PlotFiles\133 XS-US2_10m.ptf

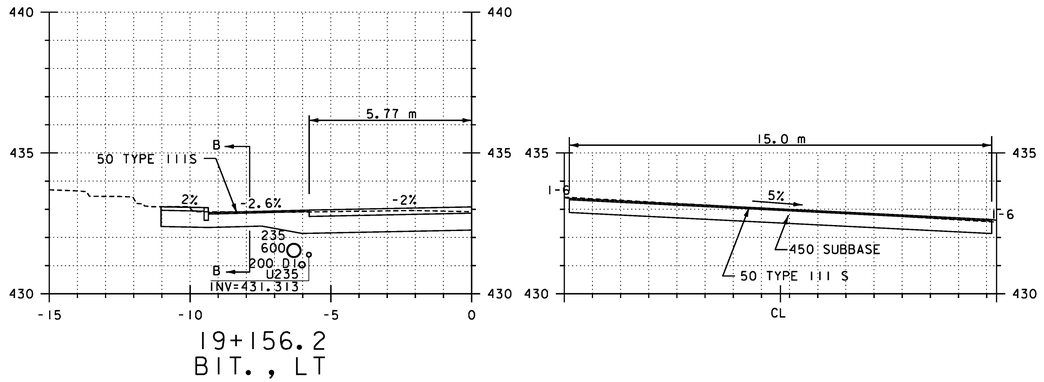

19+156.2
BIT., LT

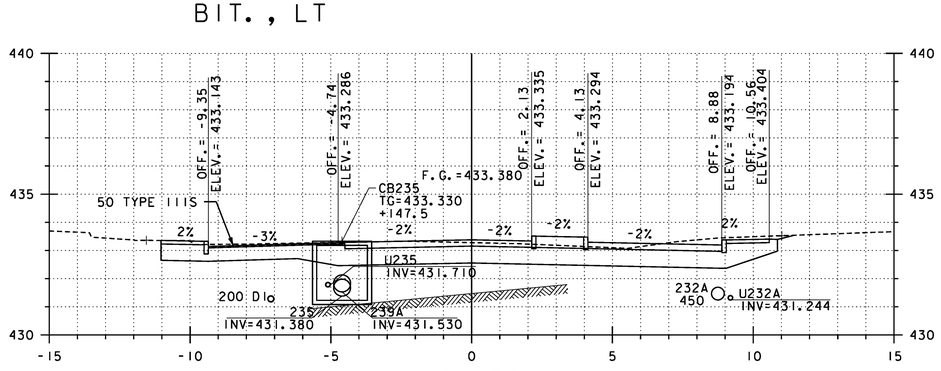

19+170

19+150

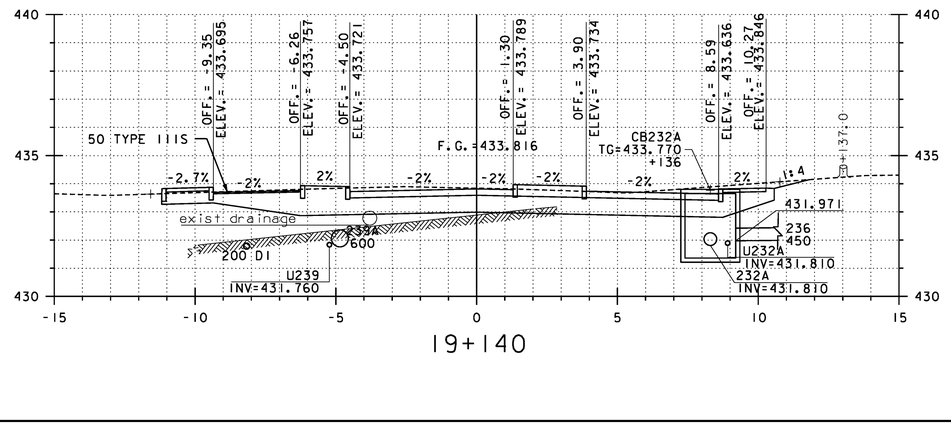

19+140

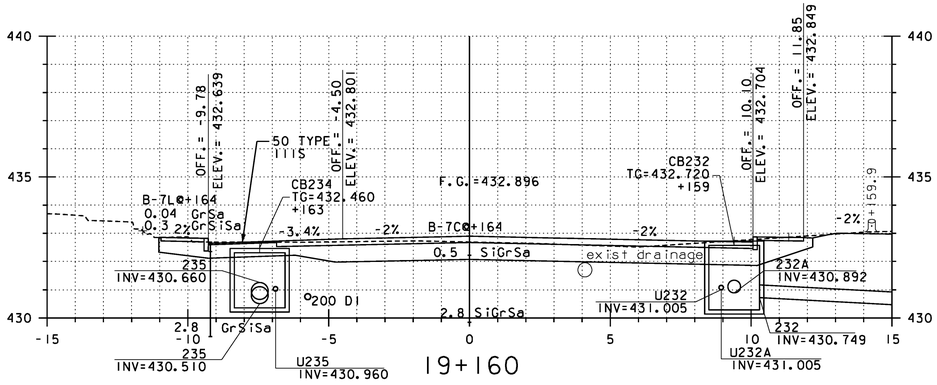

19+160

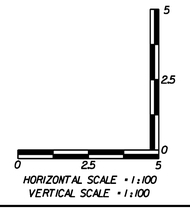

HORIZONTAL SCALE • 1:100
VERTICAL SCALE • 1:100

REPLACEMENT SHEETS ISSUED 02/24/12

STA 19+140 TO 19+170

PROJECT NAME: DANVILLE
PROJECT NUMBER: F EGC 028-3(32)

FILE NAME: ...\Plotfiles\133 XS-US2_10m.ptf
DESIGN SUPERVISOR: GARY SANTY
DESIGNED BY: STANTEC
US ROUTE 2 CROSS SECTIONS – MLX-19

PLOT DATE: 2/24/2012
DRAWN BY: STANTEC
CHECKED BY: STANTEC
SHEET 243 OF 306

2/24/2012 2:39:02 PM V:\0953\active\80530033.002\Highway\Plotfiles\133 XS-US2_10m.ptf

U.S. ROUTE 2 STA. 19+175.919=
PEACHAM ROAD STA. 4+000.000
INTERSECTION RIGHT

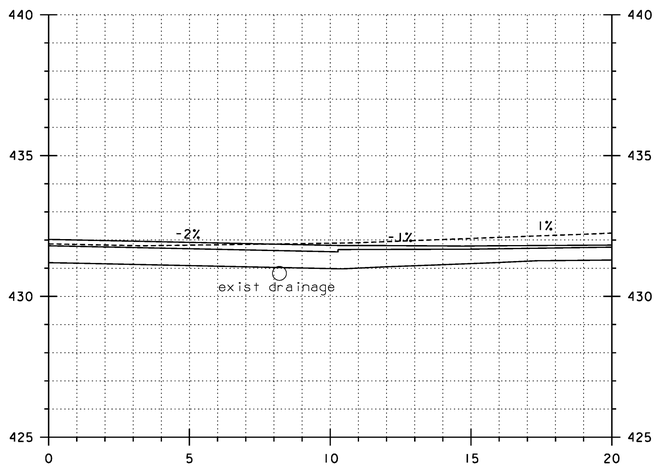

19+175.919

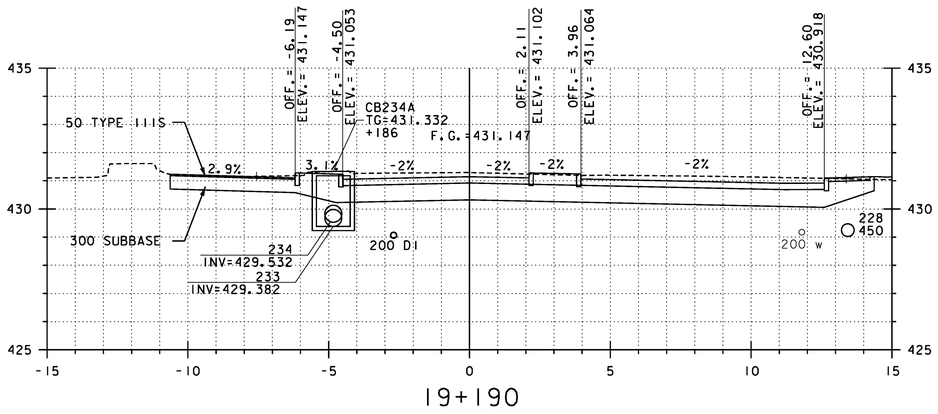

19+190

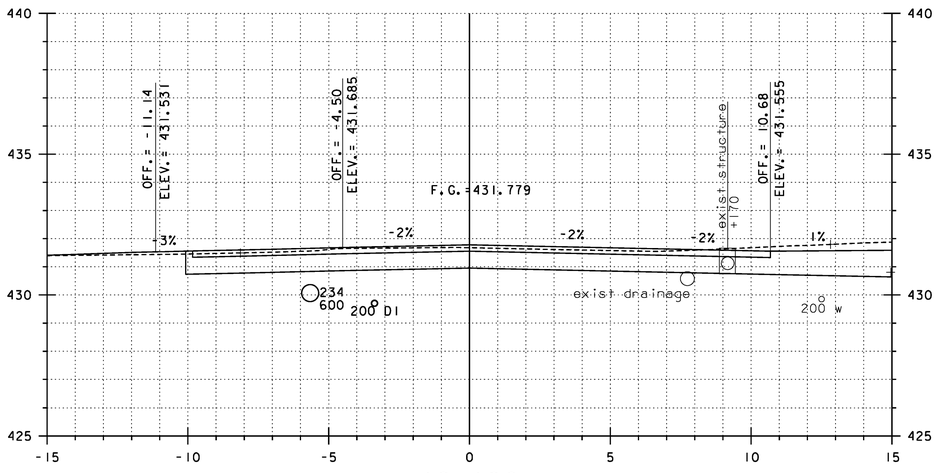

19+180

U.S. ROUTE 2 STA. 19+172.500=
HILL STREET STA. 3+000.000
INTERSECTION LEFT

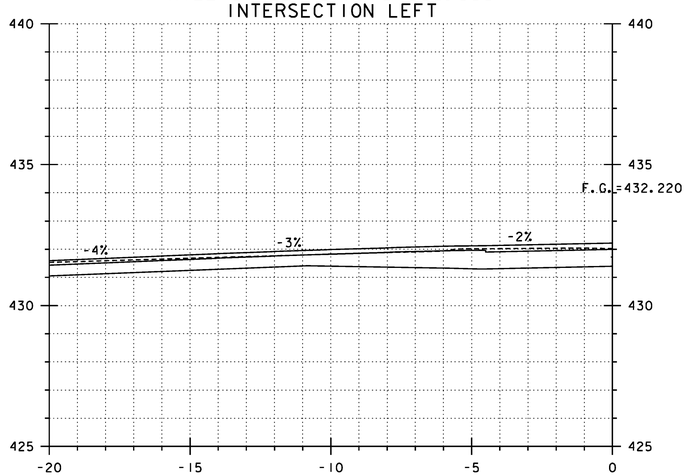

19+172.000

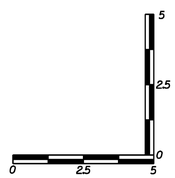

REPLACEMENT SHEETS
ISSUED 02/24/12

STA 19+172.0 TO 19+190

PROJECT NAME: DANVILLE
PROJECT NUMBER: F EGC 028-3(32)

FILE NAME: ...\PlotFiles\133 XS-US2_10m.ptf
DESIGN SUPERVISOR: GARY SANTY
DESIGNED BY: STANTEC
US ROUTE 2 CROSS SECTIONS – MLX-20

PLOT DATE: 2/24/2012
DRAWN BY: STANTEC
CHECKED BY: STANTEC
SHEET 244 OF 306

Stantec

2/24/2012 2:31:03 PM V:\1953\active\195310033_10192\Highway\PlotFiles\133 XS-US2_10m.ptf

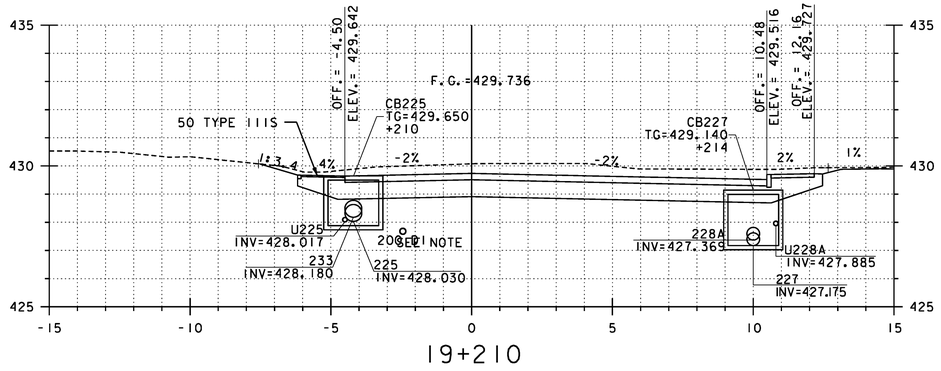

19+210

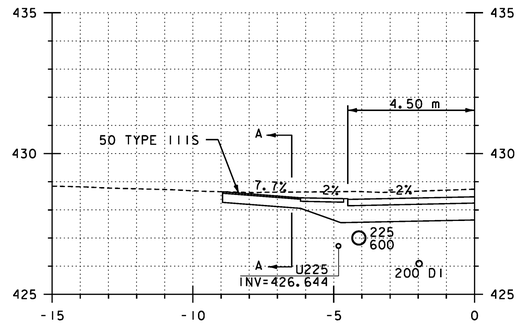

19+226

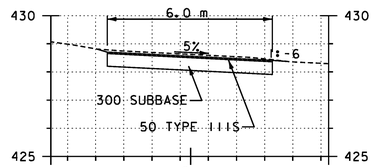

DRIVE @ 19+226.6
BIT. , LT
SECTION A-A

U.S. ROUTE 2 STA. 19+224.651=
SMITH STREET STA. 5+000.000
INTERSECTION RIGHT

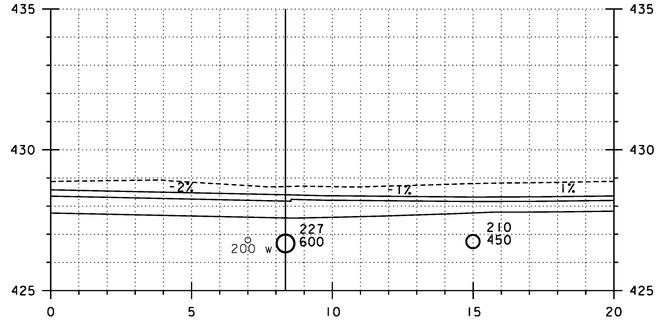

19+224.651

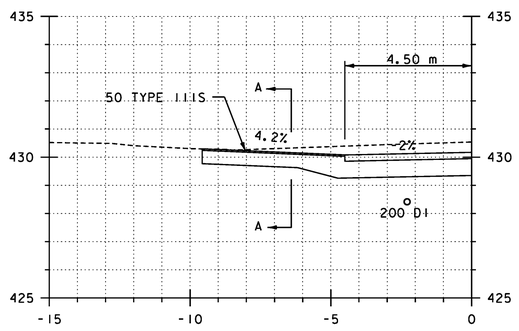

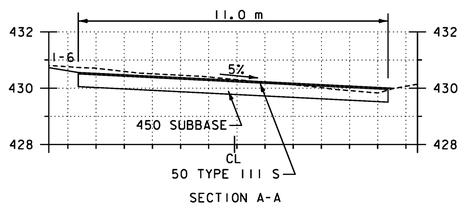

SECTION A-A

19+204.1
BIT. , LT

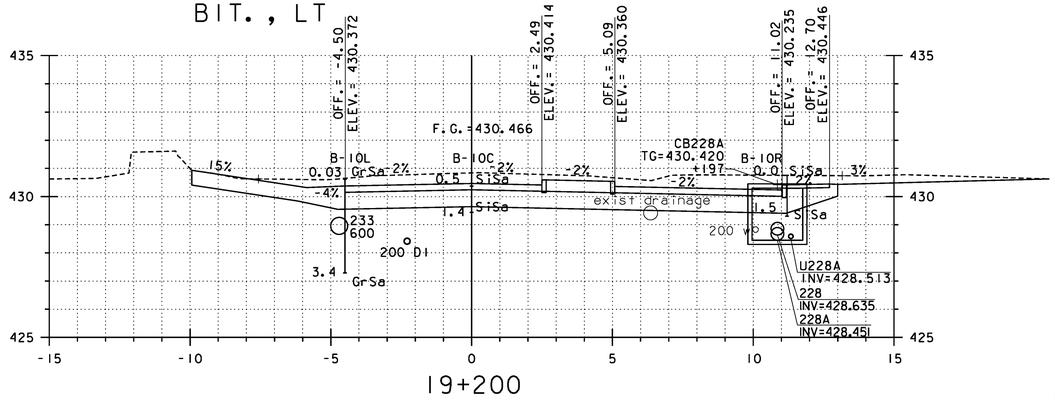

19+200

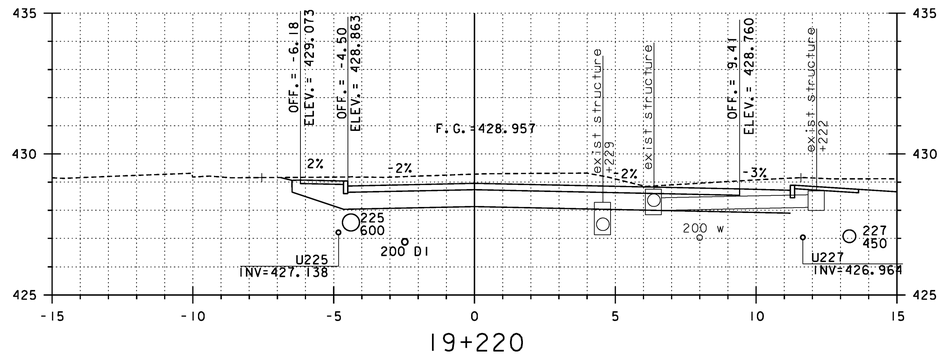

19+220

NOTE:
SEE FIRE DISTRICT WATER PLAN
FD-06 FOR WATER LINE/DRAINAGE
CONFLICT RESOLUTION.

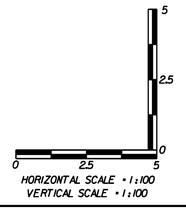

HORIZONTAL SCALE = 1:100
VERTICAL SCALE = 1:100

REPLACEMENT SHEETS ISSUED 02/24/12

STA 19+200 TO 19+226.6

PROJECT NAME: DANVILLE
PROJECT NUMBER: F EGC 028-3(32)

FILE NAME: ...\PlotFiles\133 XS-US2_10m.ptf
DESIGN SUPERVISOR: GARY SANTY
DESIGNED BY: STANTEC
US ROUTE 2 CROSS SECTIONS – MLX-21

PLOT DATE: 2/24/2012
DRAWN BY: STANTEC
CHECKED BY: STANTEC
SHEET 245 OF 306

2/24/2012 2:39:03 PM V:\0953\active\09530033.002\Highway\PlotFiles\133 XS-US2_10m.ptf

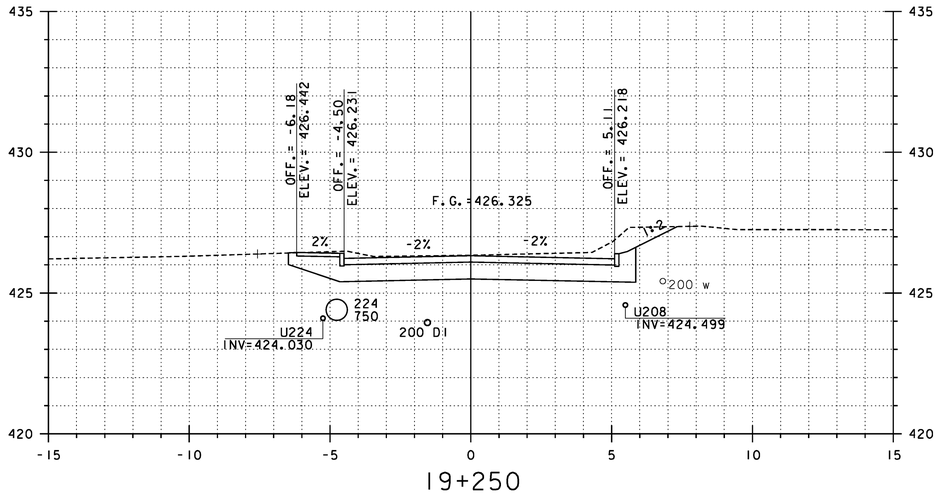

19+250

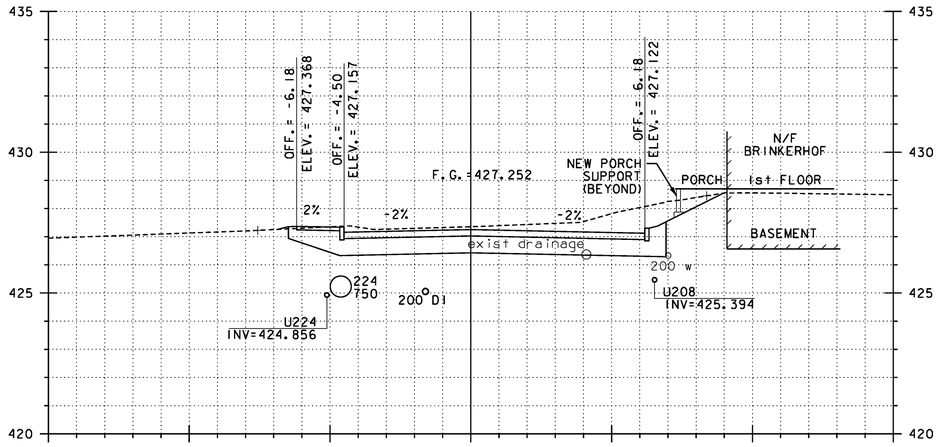

19+240

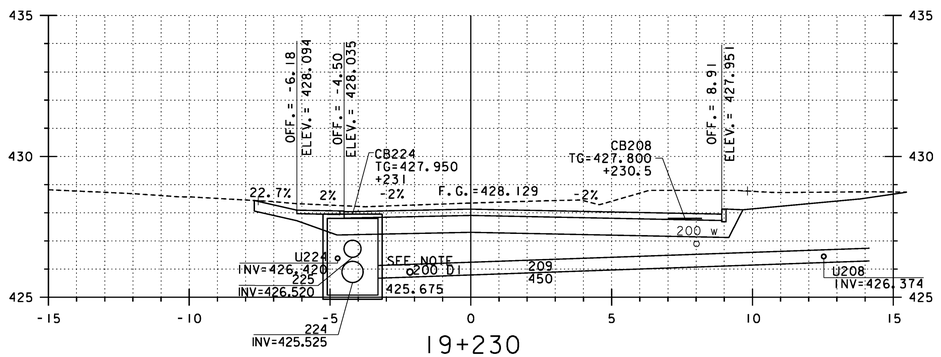

19+230

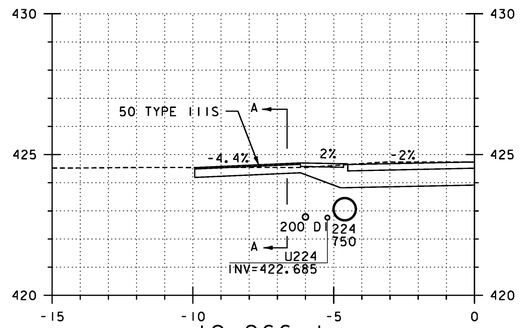

19+266.1
BIT., LT

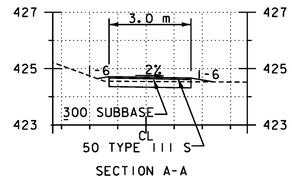

SECTION A-A

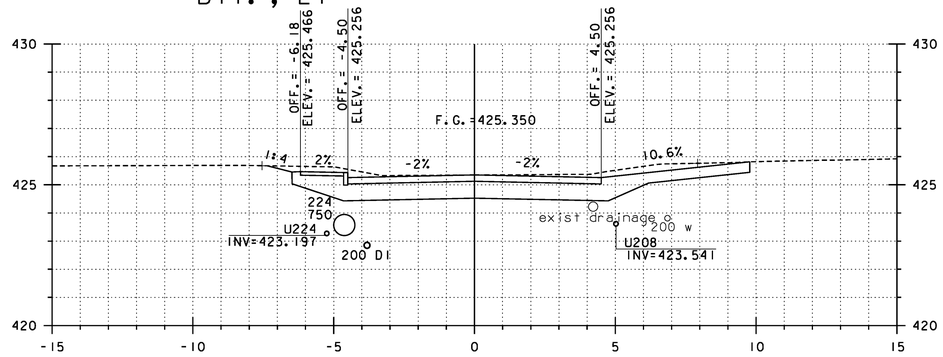

19+260

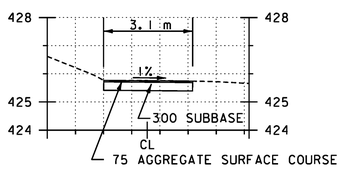

SECTION B-B

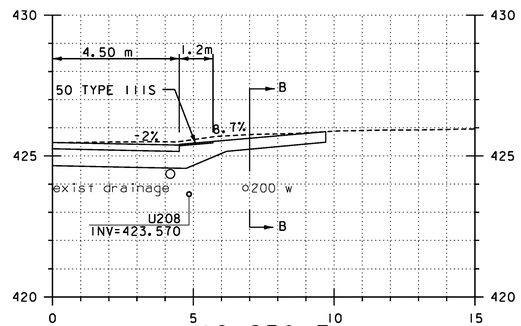

19+258.7
GRAVEL, RT

NOTE:
SEE FIRE DISTRICT WATER PLAN FD-06 FOR WATERLINE/DRAINAGE CONFLICT RESOLUTION.

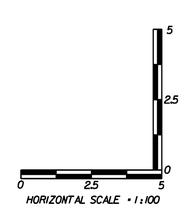

HORIZONTAL SCALE = 1:100
VERTICAL SCALE = 1:100

REPLACEMENT SHEETS
ISSUED 02/24/12

STA 19+230 TO 19+266.1

PROJECT NAME: DANVILLE	
PROJECT NUMBER: F EGC 028-3(32)	
FILE NAME: ...\PlotFiles\133 XS-US2_10m.ptf	PLOT DATE: 2/24/2012
DESIGN SUPERVISOR: GARY SANTY	DRAWN BY: STANTEC
DESIGNED BY: STANTEC	CHECKED BY: STANTEC
US ROUTE 2 CROSS SECTIONS – MLX-22	SHEET 246 OF 306

Stantec

2/24/2012 2:31:04 PM V:\1953\active\195310033_10192\Highway\PlotFiles\133 XS-US2_10m.ptf

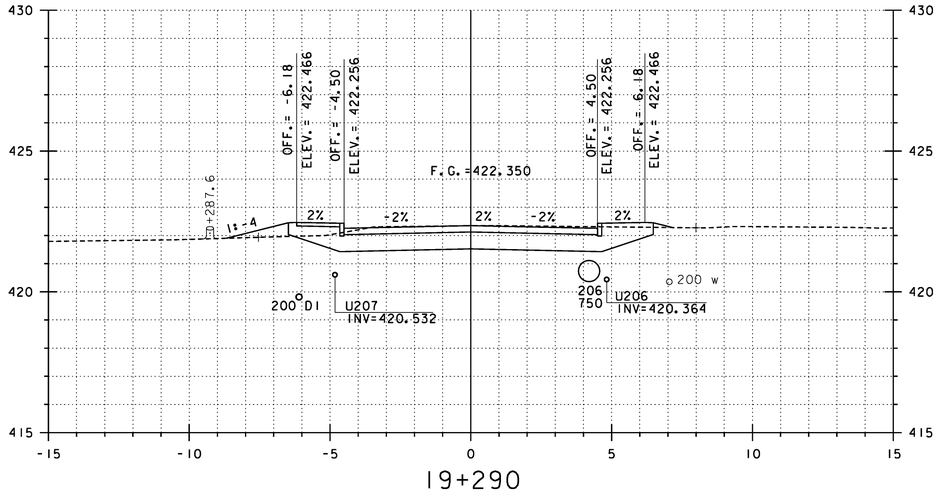

19+290

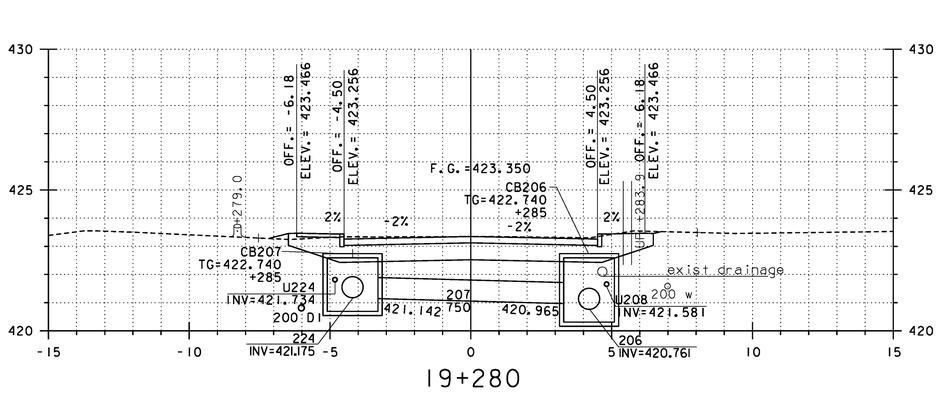

19+280

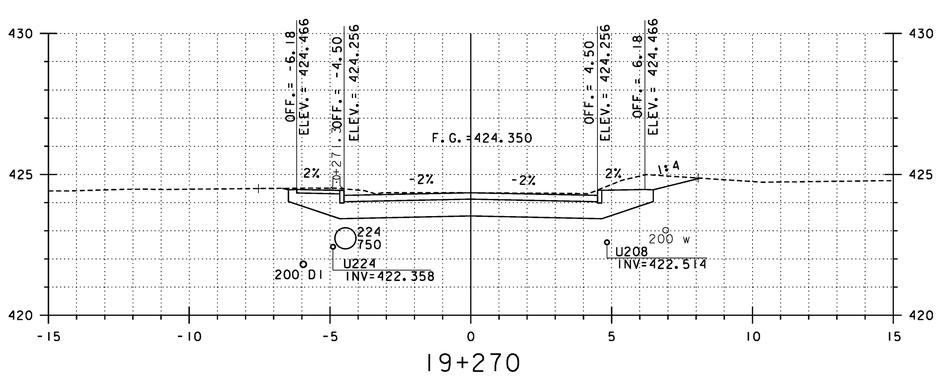

19+270

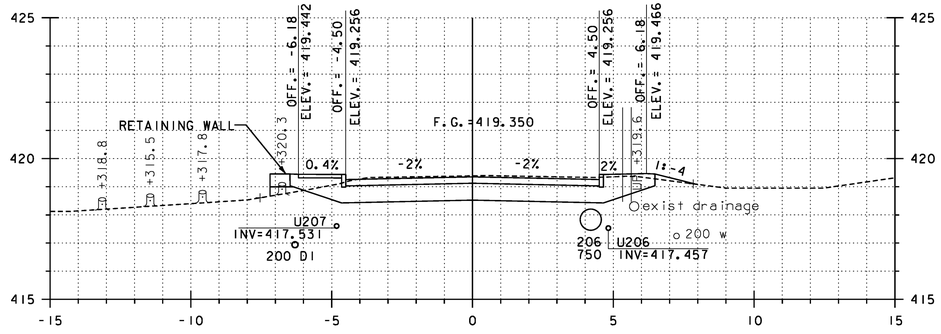

19+320

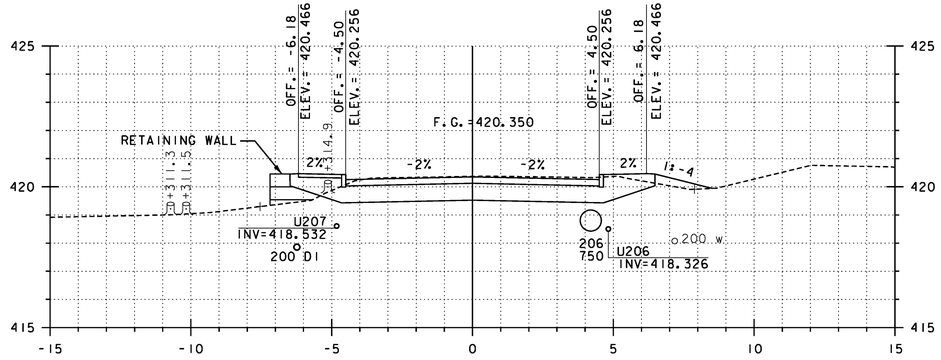

19+310

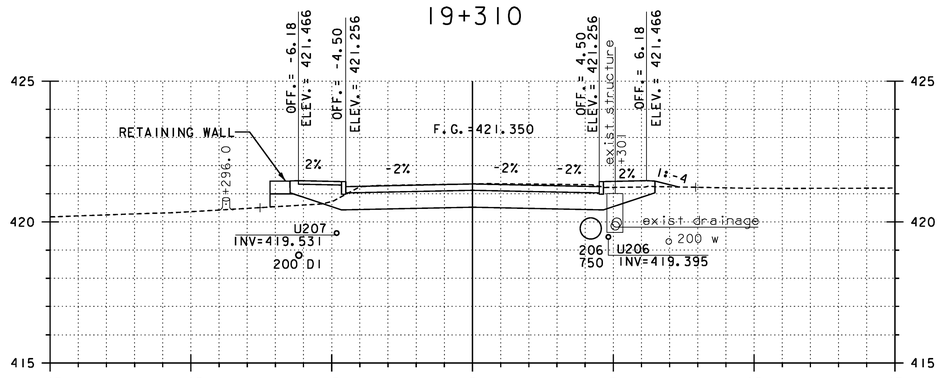

19+300

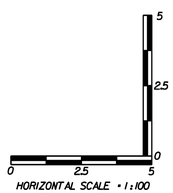

HORIZONTAL SCALE • 1:100
VERTICAL SCALE • 1:100

REPLACEMENT SHEETS ISSUED 02/24/12

STA 19+270 TO 19+320

PROJECT NAME: DANVILLE
PROJECT NUMBER: F EGC 028-3(32)

FILE NAME: ...\PlotFiles\133 XS-US2_10m.ptf
DESIGN SUPERVISOR: GARY SANTY
DESIGNED BY: STANTEC
US ROUTE 2 CROSS SECTIONS – MLX-23

PLOT DATE: 2/24/2012
DRAWN BY: STANTEC
CHECKED BY: STANTEC
SHEET 247 OF 306

2/24/2012 2:36:05 PM V:\1953\active\195360033.0092\Highway\PlotFiles\133 XS-US2_10m.ptf

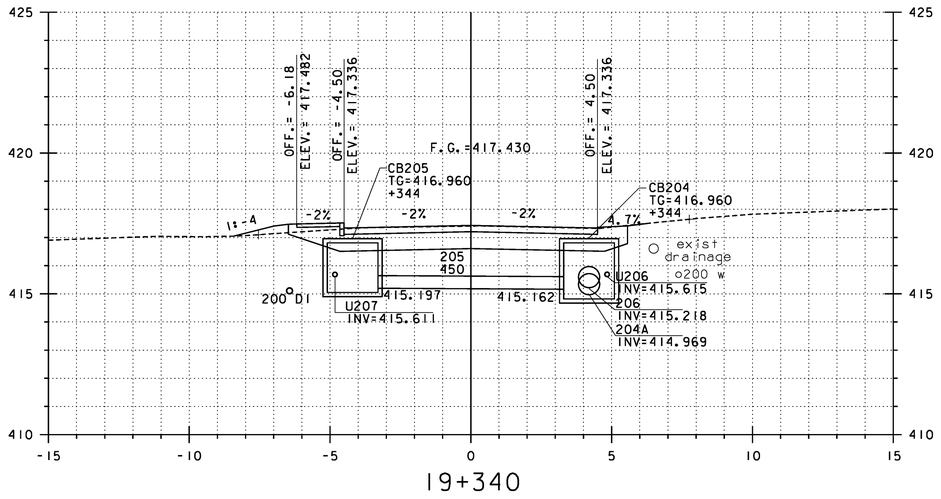

19+340

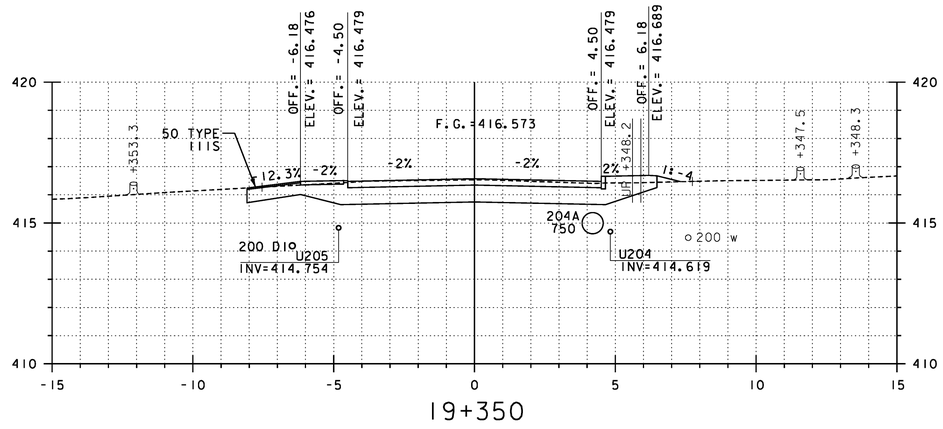

19+350

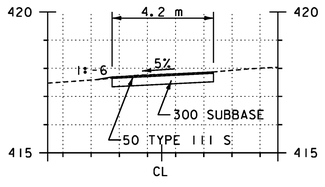

SECTION A-A

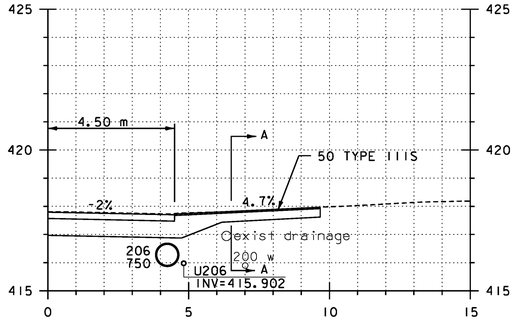

19+336.6
BIT., RT

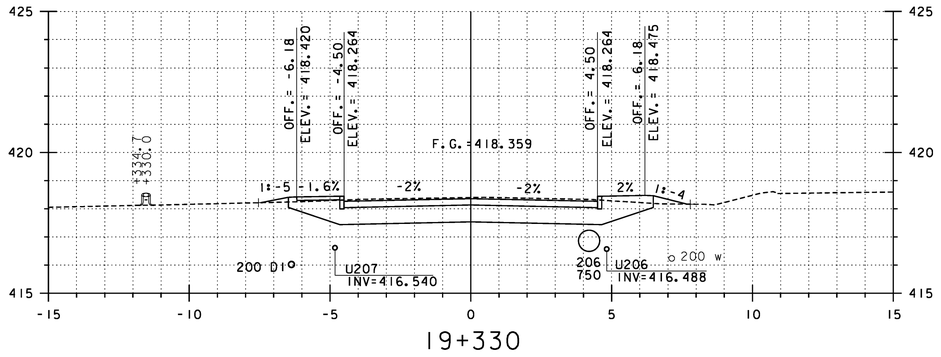

19+330

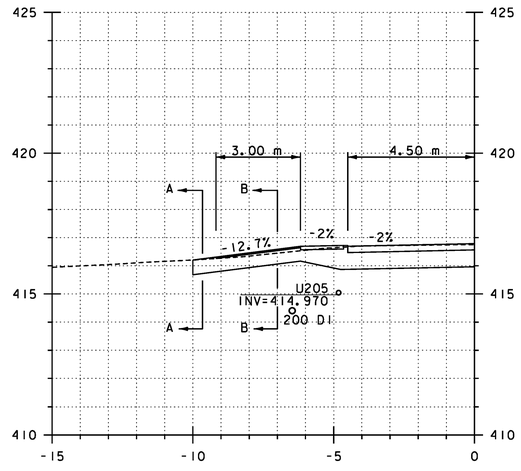

19+347.4
GRAVEL, LT

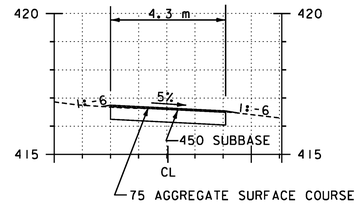

SECTION A-A

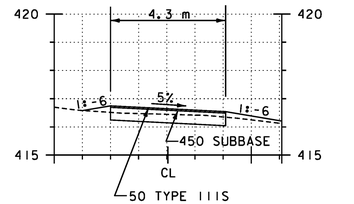

SECTION B-B

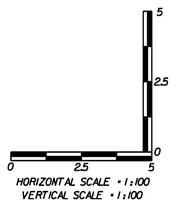

REPLACEMENT SHEETS ISSUED 02/24/12

STA 19+330 TO 19+350

PROJECT NAME: DANVILLE
PROJECT NUMBER: F EGC 028-3(32)

FILE NAME: ...\PlotFiles\133 XS-US2_10m.ptf
DESIGN SUPERVISOR: GARY SANTY
DESIGNED BY: STANTEC
US ROUTE 2 CROSS SECTIONS - MLX-24

PLOT DATE: 2/24/2012
DRAWN BY: STANTEC
CHECKED BY: STANTEC
SHEET 248 OF 306

2/24/2012 2:34:05 PM V:\1953\active\195300033.0092\Highways\PlotFiles\133 XS-US2_10m.ptf

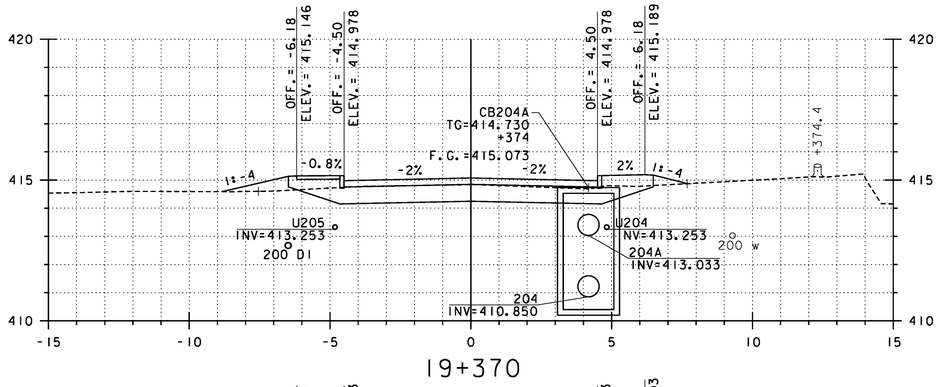

19+370

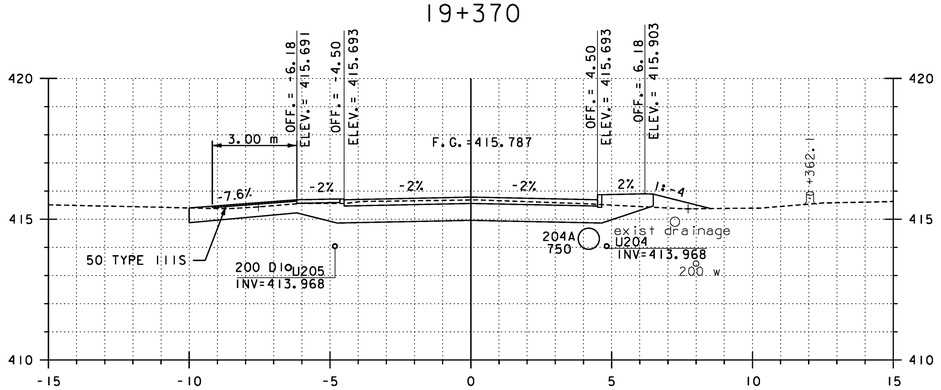

19+360

19+359.3
GRAVEL , LT

SECTION C-C

SECTION D-D

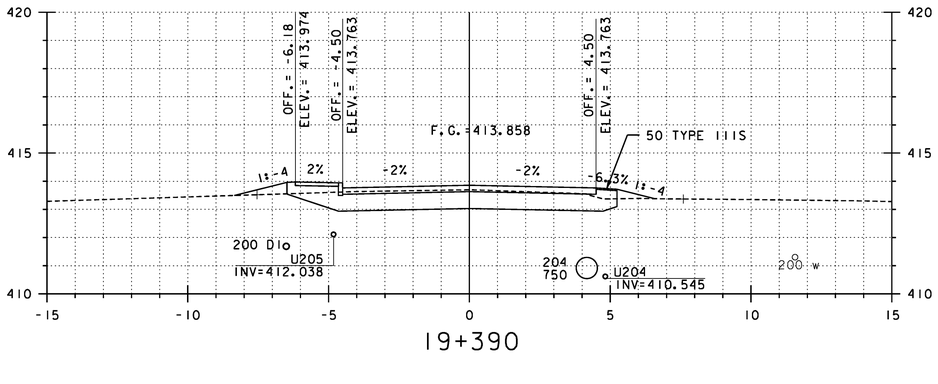

19+390

SECTION A-A

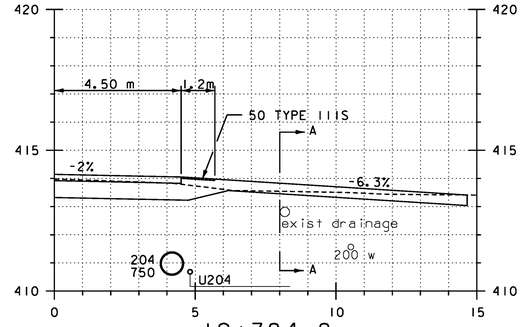

19+384.8
GRAVEL , RT

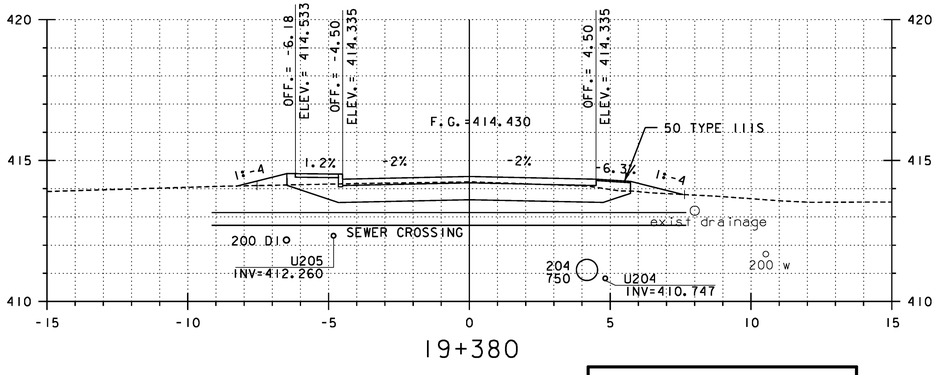

19+380

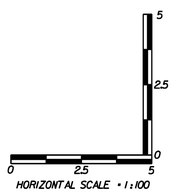

HORIZONTAL SCALE = 1:100
VERTICAL SCALE = 1:100

REPLACEMENT SHEETS ISSUED 02/24/12

STA 19+359.3 TO 19+390

PROJECT NAME: DANVILLE
PROJECT NUMBER: F EGC 028-3(32)

FILE NAME: ...\PlotFiles\I33 XS-US2_10m.ptf
DESIGN SUPERVISOR: GARY SANTY
DESIGNED BY: STANTEC
US ROUTE 2 CROSS SECTIONS – MLX-25

PLOT DATE: 2/24/2012
DRAWN BY: STANTEC
CHECKED BY: STANTEC
SHEET 249 OF 306

Stantec

2/24/2012 2:36:06 PM V:\0953\active\95300033.0092\Highway\PlotFiles\I33 XS-US2_10m.ptf

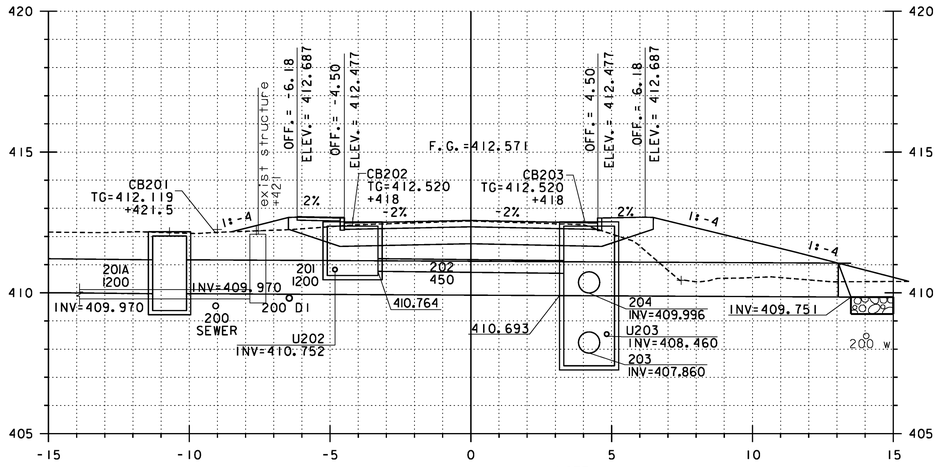

19+420

NOTE:
SEE FIRE DISTRICT WATER PLAN
FD-07 FOR WATERLINE/DRAINAGE
CONFLICT RESOLUTION.

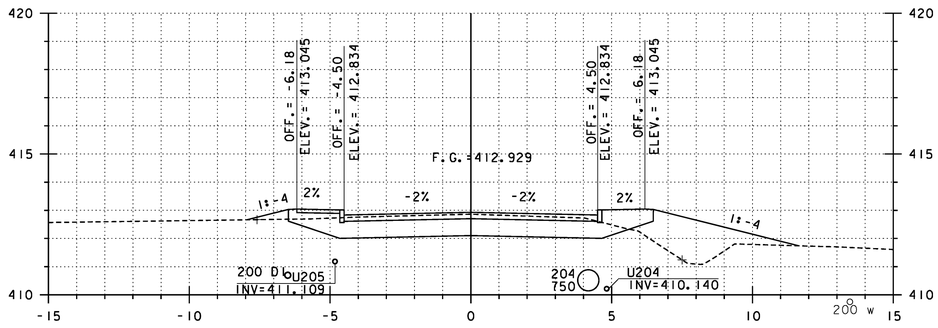

19+410

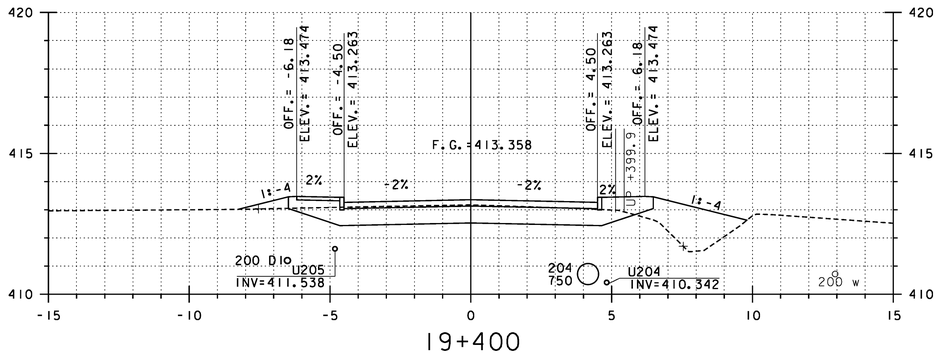

19+400

U.S. ROUTE 2 STA. 19+434.495=
HIGHLAND AVENUE STA. 6+000.000
MOUNTAINVIEW DRIVE STA. 7+000.000

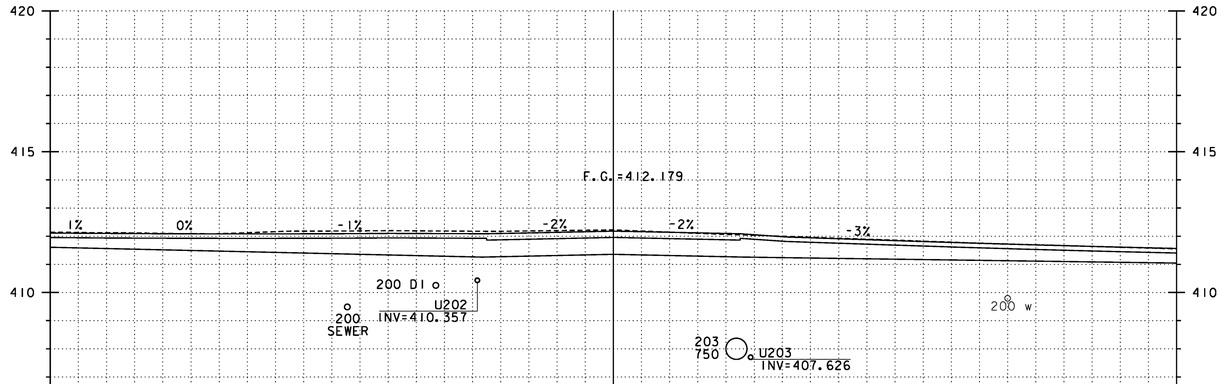

19+434

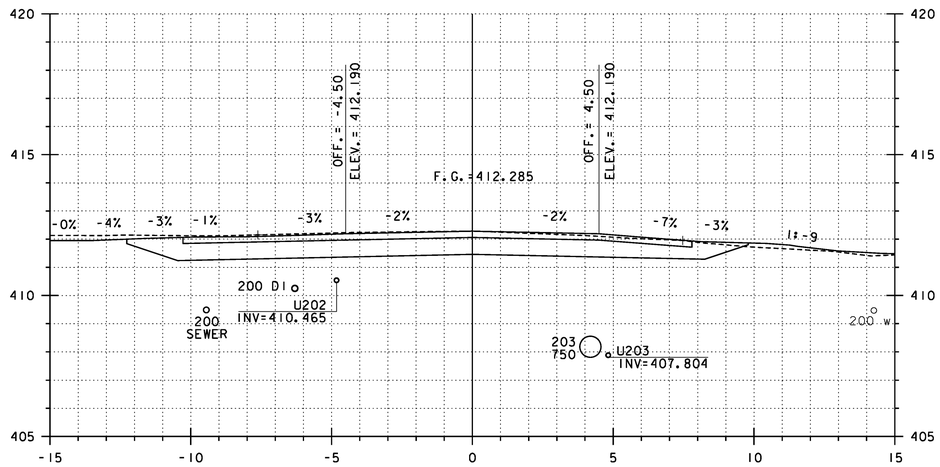

19+430

HORIZONTAL SCALE • 1:100
VERTICAL SCALE • 1:100

REPLACEMENT SHEETS
ISSUED 02/24/12

STA 19+400 TO 19+434.495

PROJECT NAME: DANVILLE
PROJECT NUMBER: F EGC 028-3(32)

FILE NAME: ...\PlotFiles\133 XS-US2_10m.ptf
DESIGN SUPERVISOR: GARY SANTY
DESIGNED BY: STANTEC
US ROUTE 2 CROSS SECTIONS – MLX-26

PLOT DATE: 2/24/2012
DRAWN BY: STANTEC
CHECKED BY: STANTEC
SHEET 250 OF 306

2/24/2012 2:36:07 PM V:\1953\active\195310033.002\Highway\PlotFiles\133 XS-US2_10m.ptf

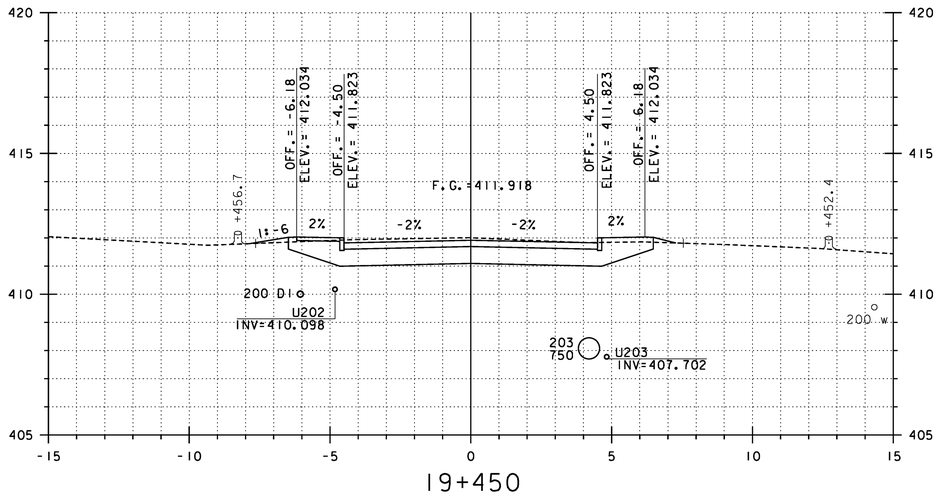

19+450

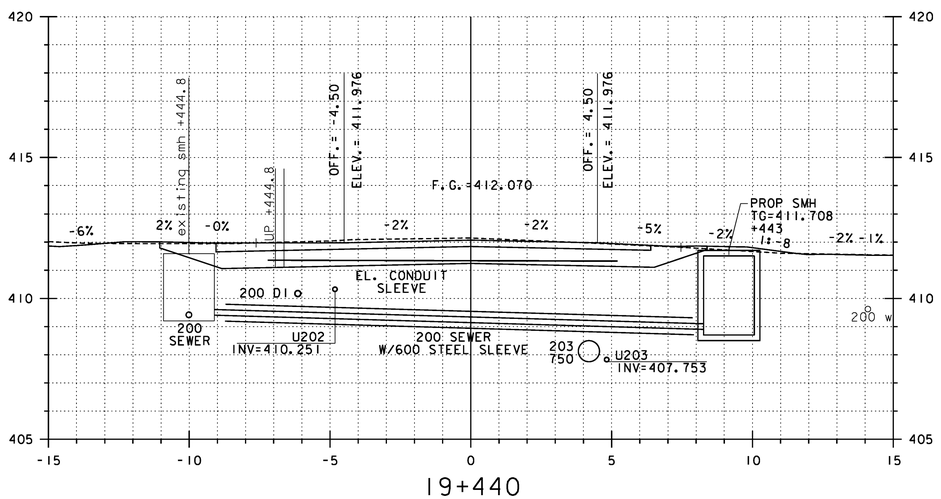

19+440

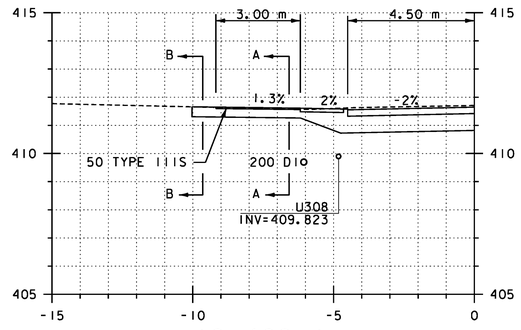

19+468.1
GRAVEL, LT

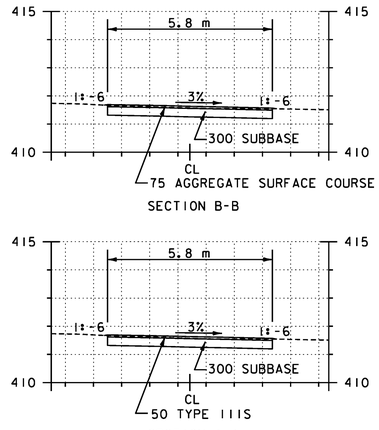

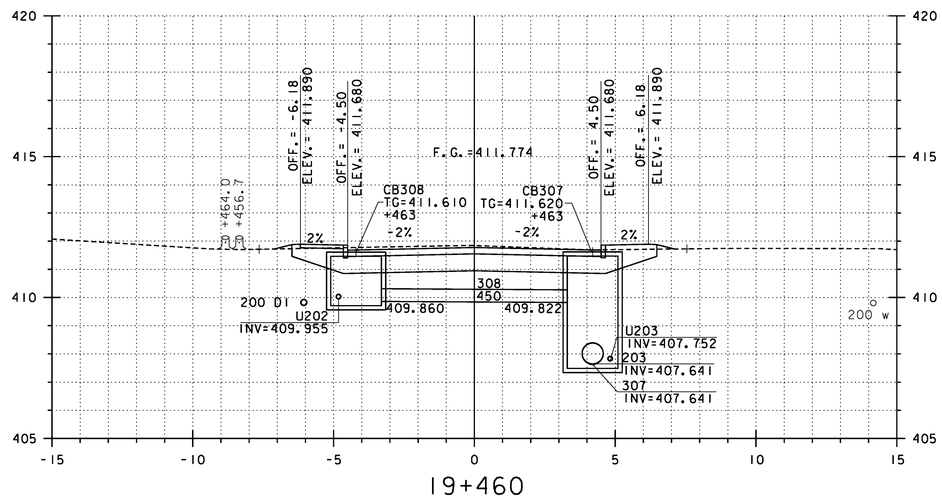

19+460

REPLACEMENT SHEETS ISSUED 02/24/12

STA 19+440 TO 19+468.1

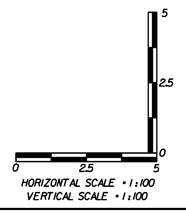

Stantec

PROJECT NAME: DANVILLE	
PROJECT NUMBER: F EGC 028-3(32)	
FILE NAME: ...\PlotFiles\133 XS-US2_10m.ptf	PLOT DATE: 2/24/2012
DESIGN SUPERVISOR: GARY SANTY	DRAWN BY: STANTEC
DESIGNED BY: STANTEC	CHECKED BY: STANTEC
US ROUTE 2 CROSS SECTIONS – MLX-27	SHEET 251 OF 306

2/24/2012 2:36:08 PM V:\0953\active\09530033.0092\Highway\PlotFiles\133 XS-US2_10m.ptf

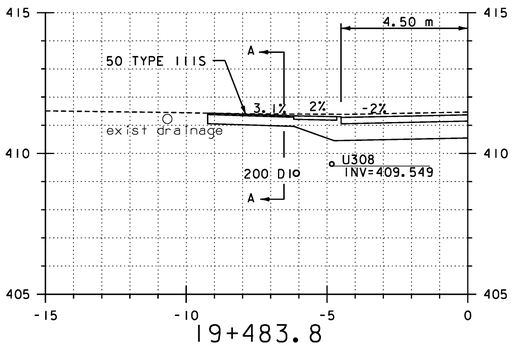

19+483.8
GRAVEL, LT

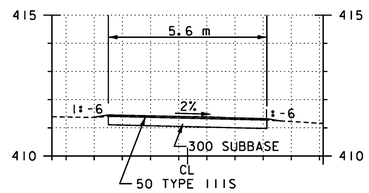

SECTION A-A

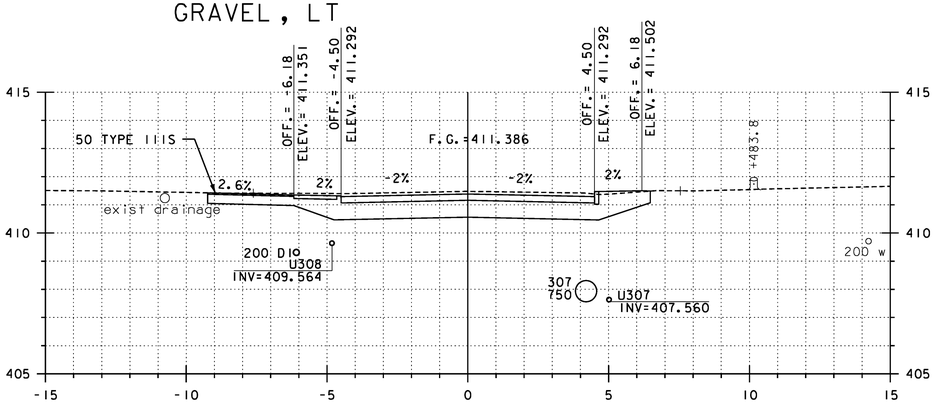

19+480

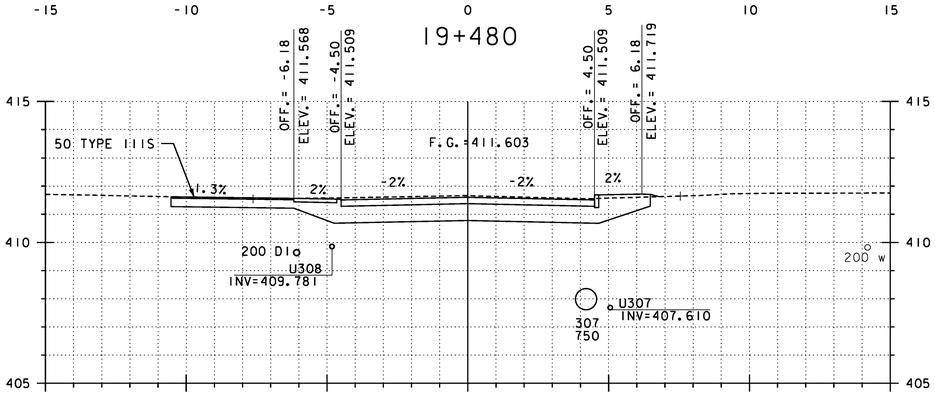

19+470

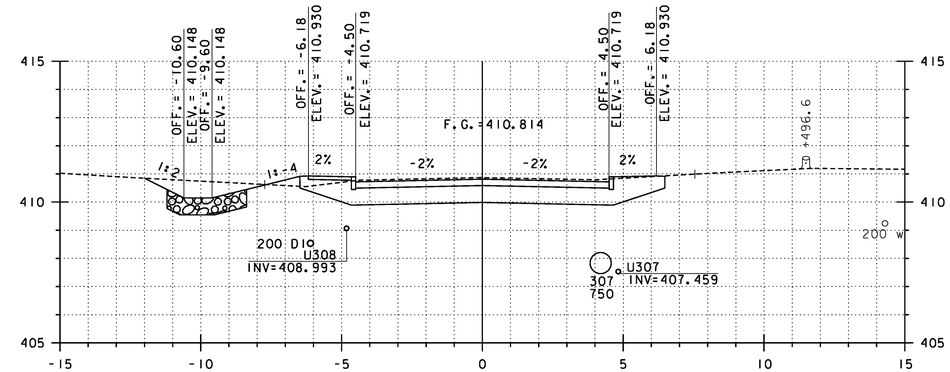

19+500

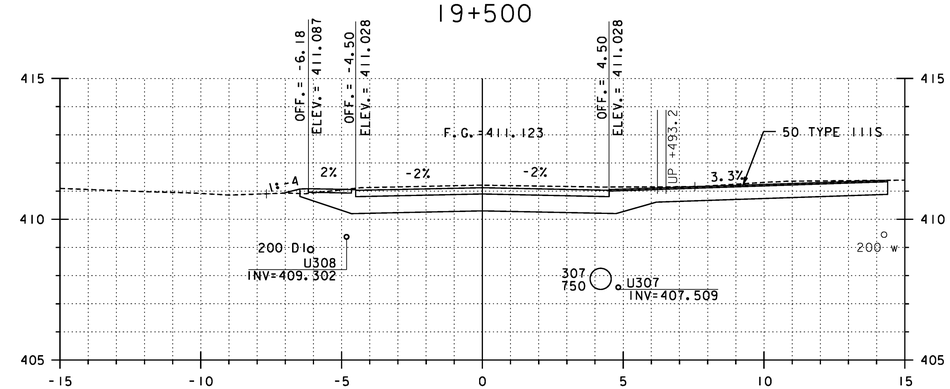

19+490

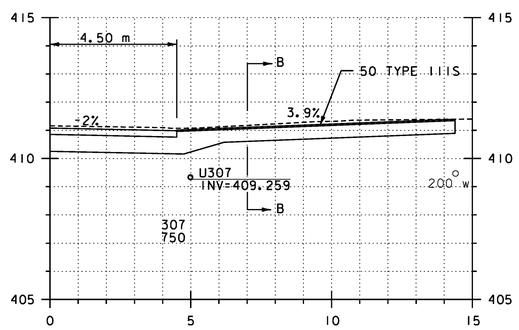

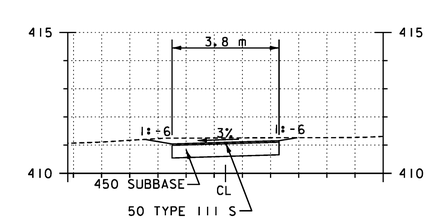

SECTION B-B

19+489.8
BIT., RT

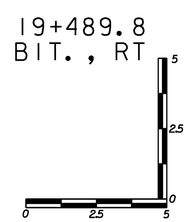

HORIZONTAL SCALE = 1:100
VERTICAL SCALE = 1:100

REPLACEMENT SHEETS ISSUED 02/24/12

STA 19+470 TO 19+500

PROJECT NAME: DANVILLE
PROJECT NUMBER: F EGC 028-3(32)

FILE NAME: ...\PlotFiles\133 XS-US2_10m.ptf
DESIGN SUPERVISOR: GARY SANTY
DESIGNED BY: STANTEC
US ROUTE 2 CROSS SECTIONS – MLX-28

PLOT DATE: 2/24/2012
DRAWN BY: STANTEC
CHECKED BY: STANTEC
SHEET 252 OF 306

Stantec

2/24/2012 2:31:08 PM V:\1953\active\195310033_10192\Highway\PlotFiles\133 XS-US2_10m.ptf

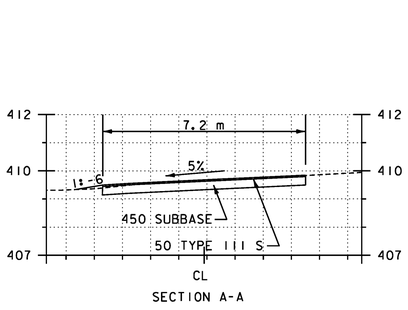

SECTION A-A

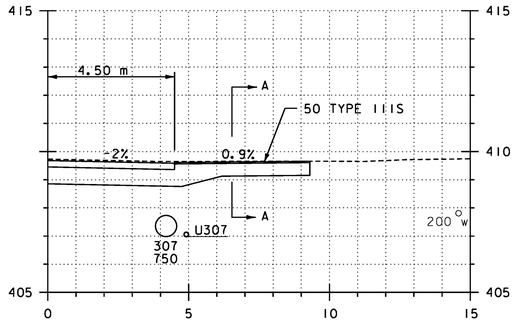

19+528.5
BIT., RT

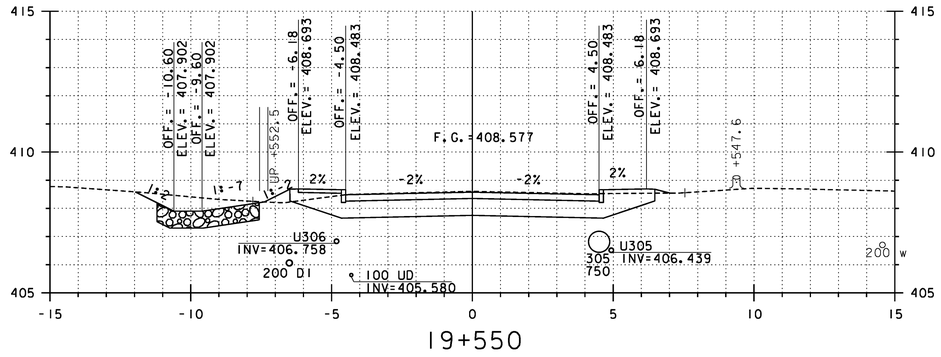

19+550

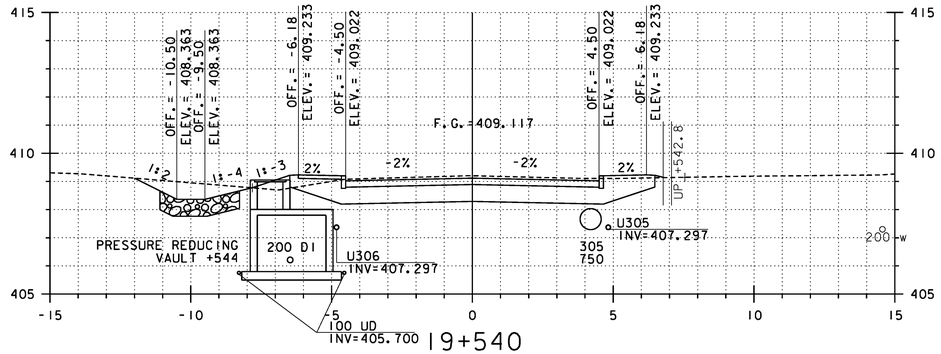

19+540

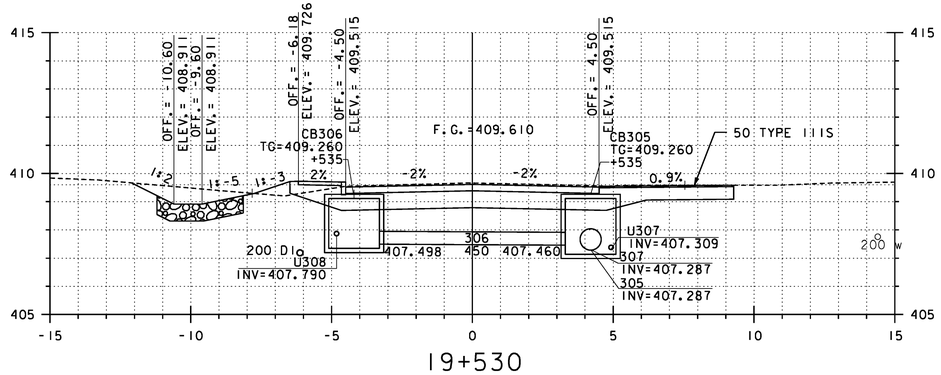

19+530

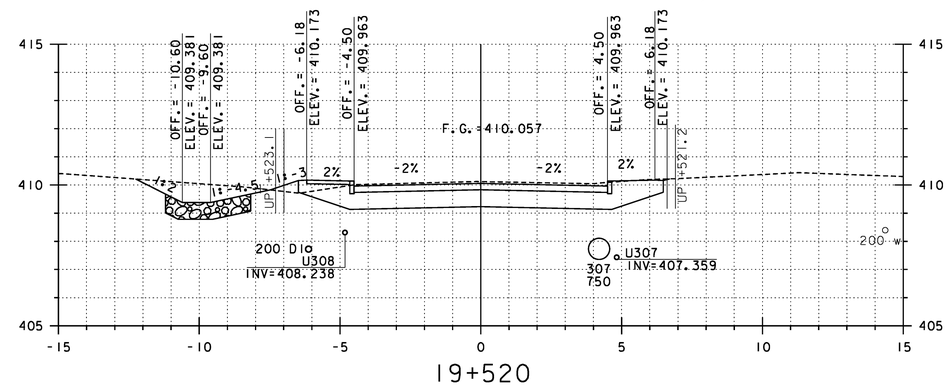

19+520

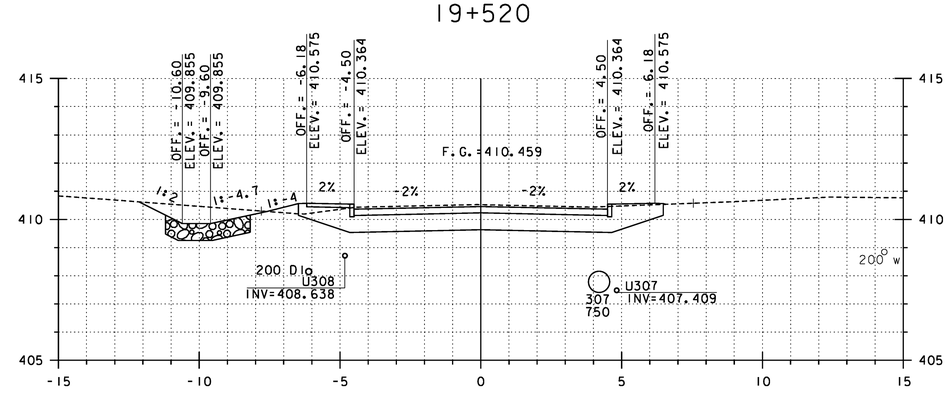

19+510

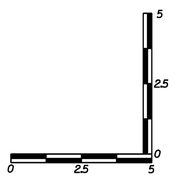

HORIZONTAL SCALE • 1:100
VERTICAL SCALE • 1:100

REPLACEMENT SHEETS
ISSUED 02/24/12

STA 19+510 TO 19+550

PROJECT NAME: DANVILLE
PROJECT NUMBER: F EGC 028-3(32)

FILE NAME: ...\PlotFiles\I33 XS-US2_10m.ptf
DESIGN SUPERVISOR: GARY SANTY
DESIGNED BY: STANTEC
US ROUTE 2 CROSS SECTIONS – MLX-29

PLOT DATE: 2/24/2012
DRAWN BY: STANTEC
CHECKED BY: STANTEC
SHEET 253 OF 306

Stantec

2/24/2012 2:36:09 PM V:\0953\active\95300033.0092\Highway\PlotFiles\I33 XS-US2_10m.ptf

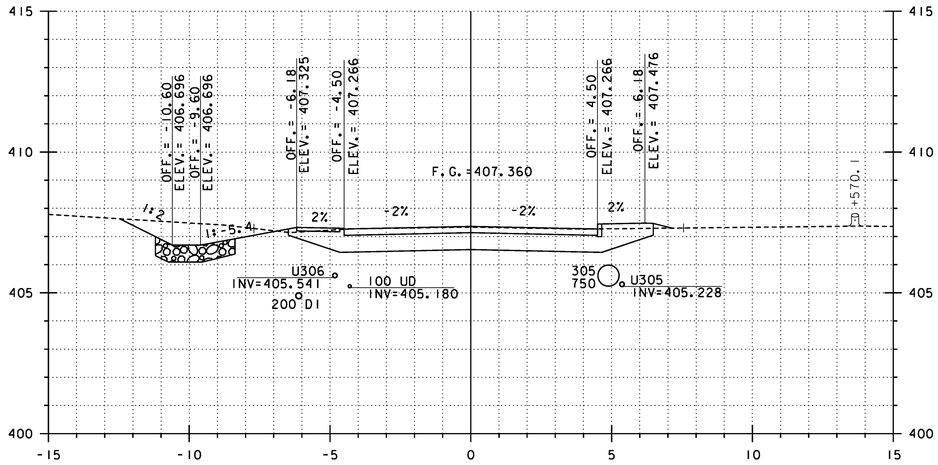

19+570

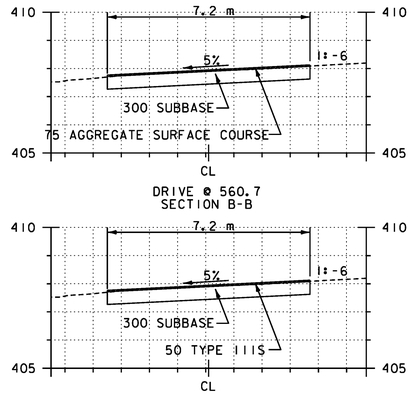

DRIVE @ 560.7
SECTION B-B

DRIVE @ 560.7
SECTION A-A

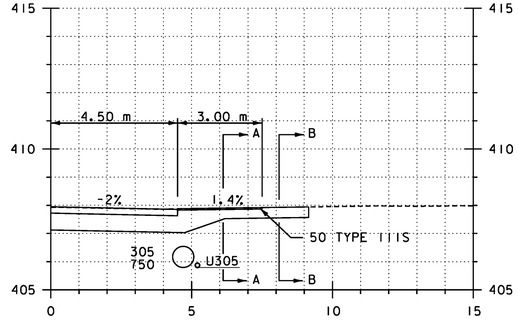

19+560.7
GRAVEL, RT

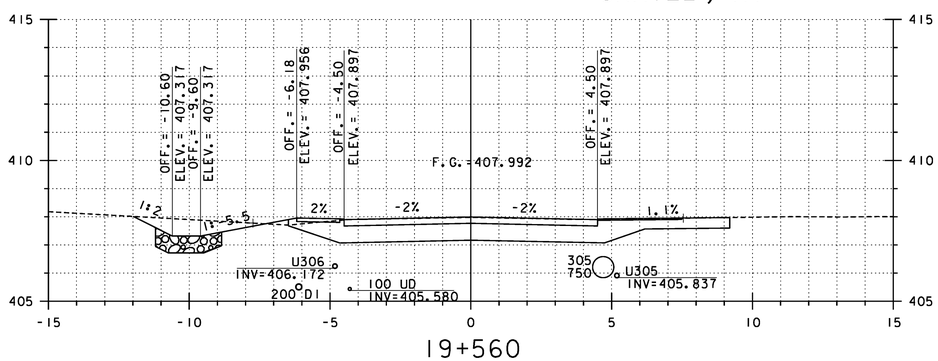

19+560

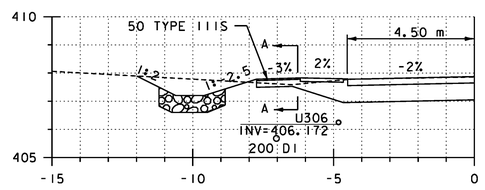

19+562.1
BIT., LT

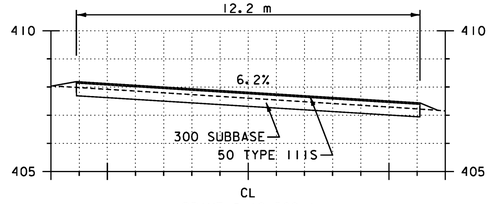

DRIVE @ 19+562.1
SECTION A-A

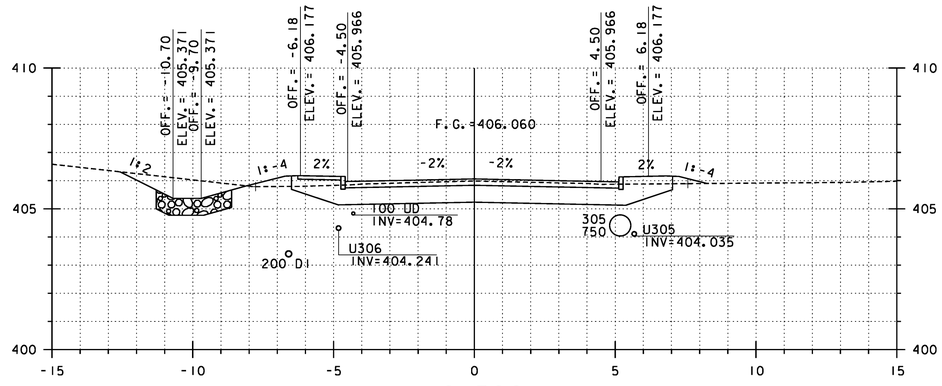

19+590

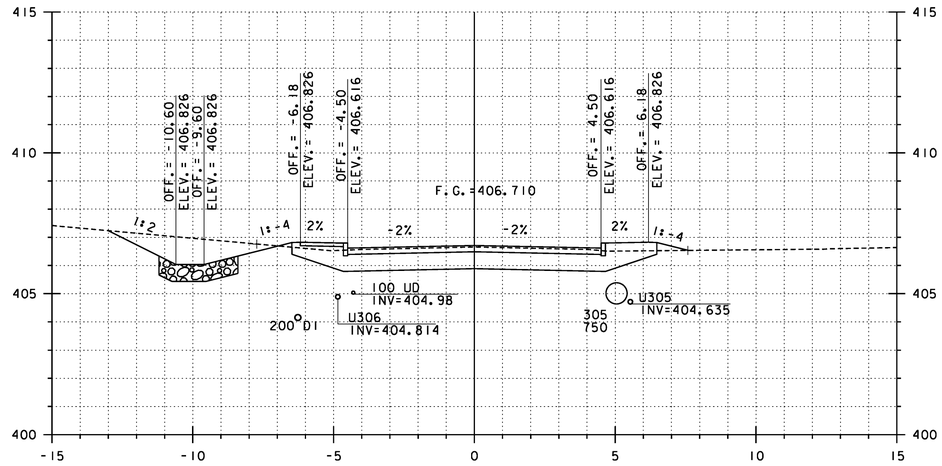

19+580

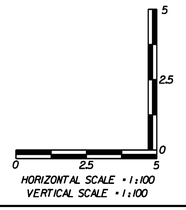

REPLACEMENT SHEETS ISSUED 02/24/12

STA 19+560 TO 19+562.1

PROJECT NAME: DANVILLE
PROJECT NUMBER: F EGC 028-3(32)

FILE NAME: ...\PlotFiles\133 XS-US2_10m.ptf
DESIGN SUPERVISOR: GARY SANTY
DESIGNED BY: STANTEC
US ROUTE 2 CROSS SECTIONS – MLX-30

PLOT DATE: 2/24/2012
DRAWN BY: STANTEC
CHECKED BY: STANTEC
SHEET 254 OF 306

2/24/2012 2:3:10 PM V:\1953\active\195300033.0092\Highways\PlotFiles\133 XS-US2_10m.ptf

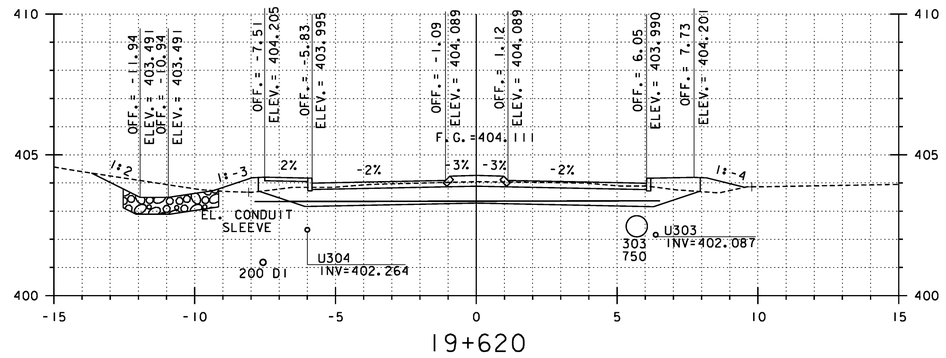

19+620

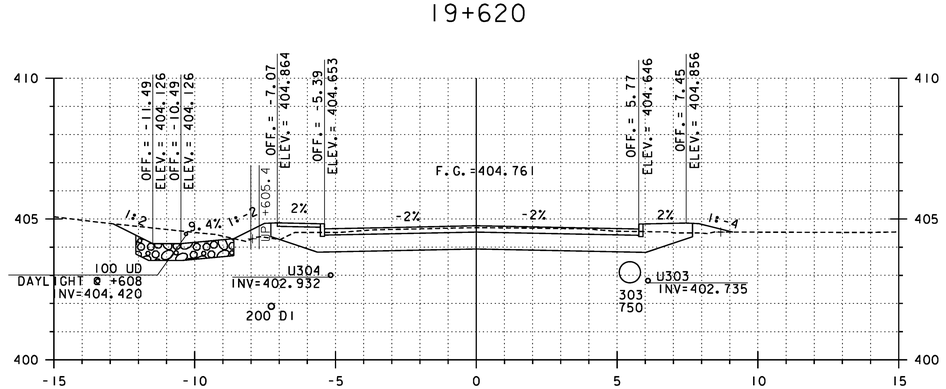

19+610

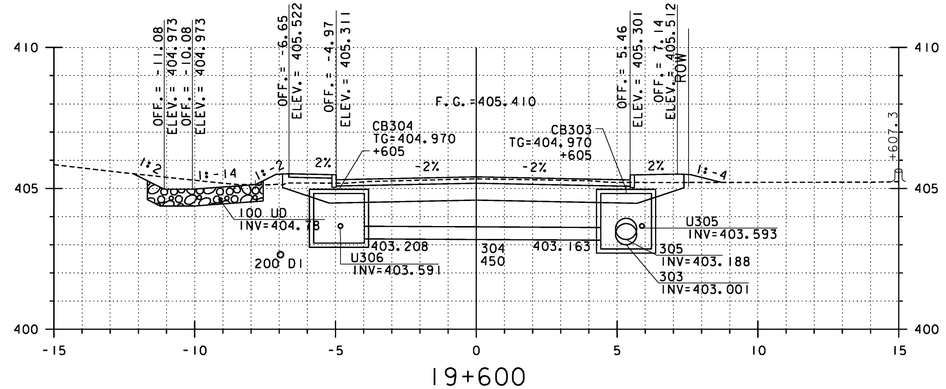

19+600

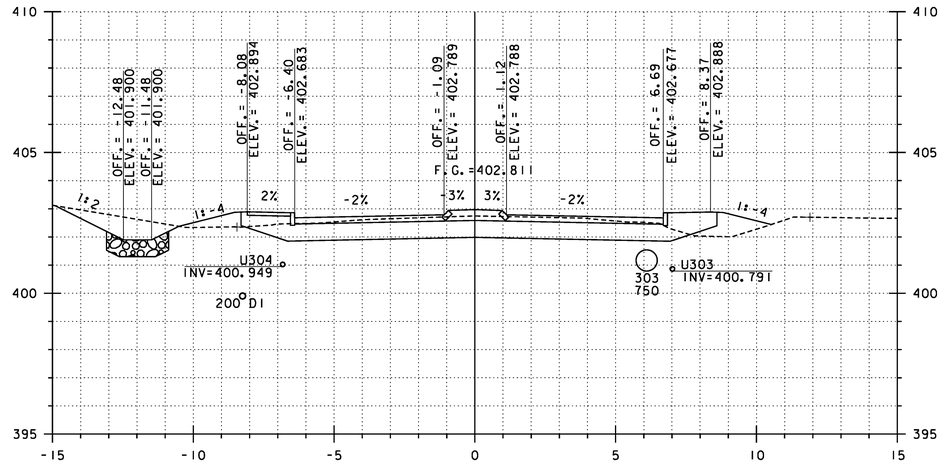

19+640

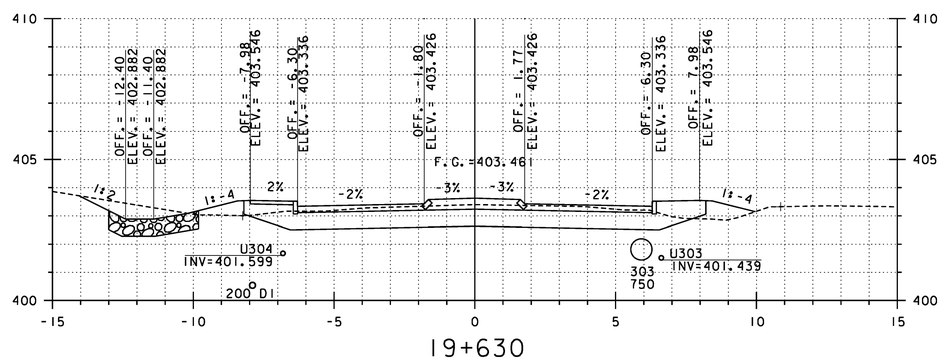

19+630

REPLACEMENT SHEETS ISSUED 02/24/12

STA 19+600 TO 19+640

HORIZONTAL SCALE • 1:100
VERTICAL SCALE • 1:100

Stantec

PROJECT NAME: DANVILLE
PROJECT NUMBER: F EGC 028-3(32)

FILE NAME: ...\PlotFiles\133 XS-US2_10m.ptf
DESIGN SUPERVISOR: GARY SANTY
DESIGNED BY: STANTEC
US ROUTE 2 CROSS SECTIONS – MLX-31

PLOT DATE: 2/24/2012
DRAWN BY: STANTEC
CHECKED BY: STANTEC
SHEET 255 OF 306

2/24/2012 2:3:1 PM V:\1953\active\05330033.0092\Highway\PlotFiles\133 XS-US2_10m.ptf

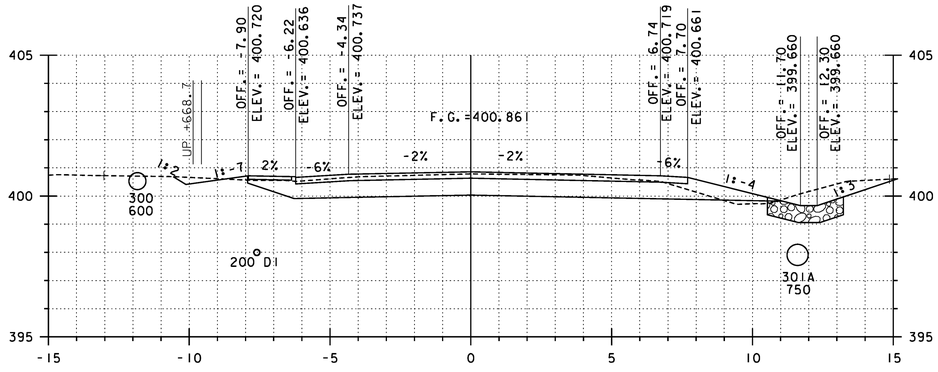

19+670

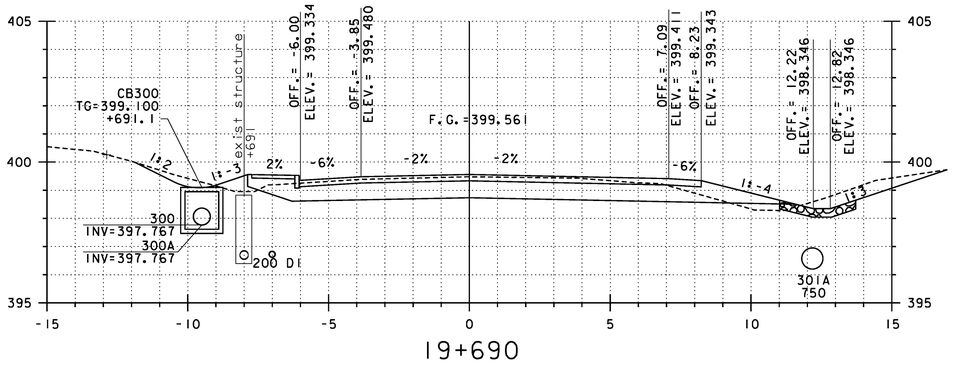

19+690

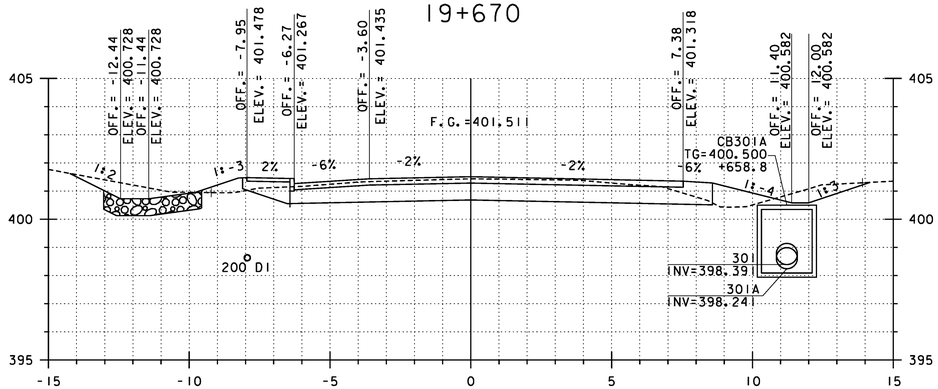

19+660

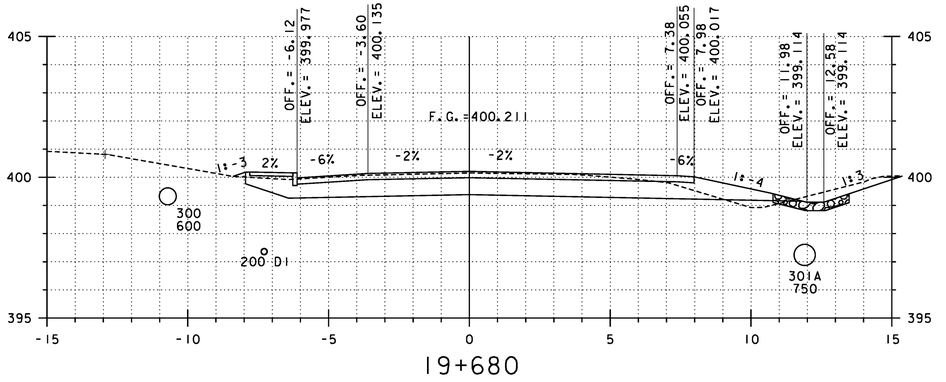

19+680

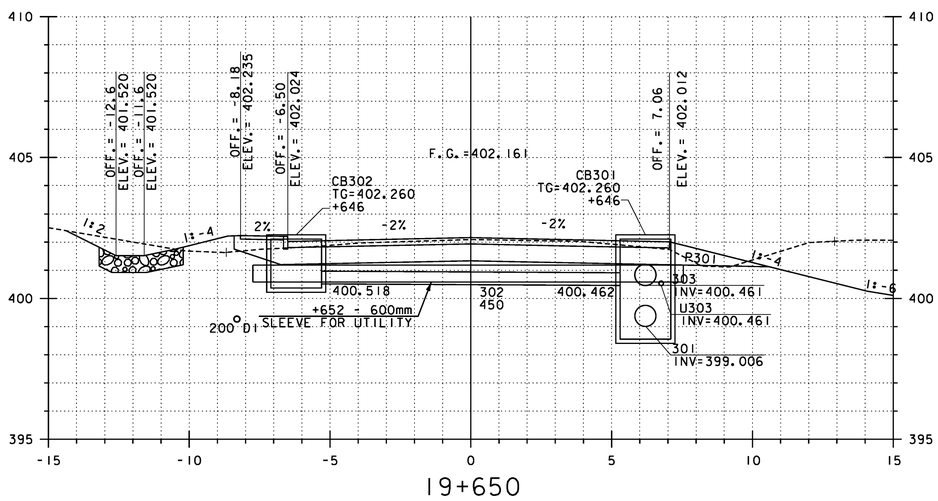

19+650

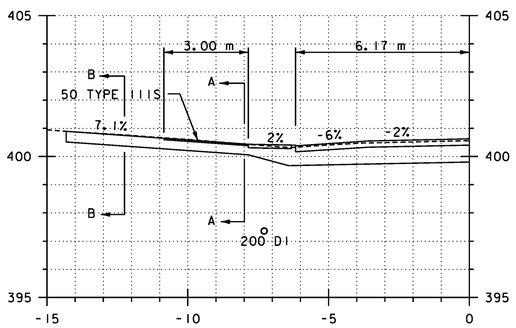

19+675.0
GRAVEL, LT

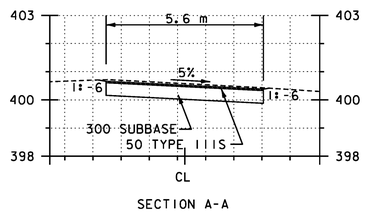

SECTION A-A

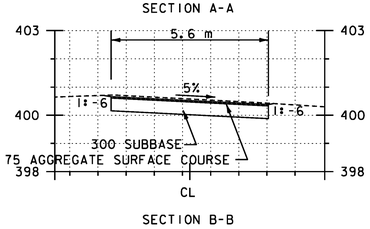

SECTION B-B

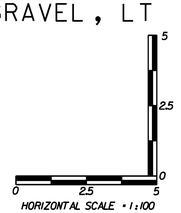

HORIZONTAL SCALE - 1:100
VERTICAL SCALE - 1:100

REPLACEMENT SHEETS ISSUED 02/24/12

STA 19+650 TO 19+690

PROJECT NAME: DANVILLE
PROJECT NUMBER: F EGC 028-3(32)

FILE NAME: ...\PlotFiles\I33 XS-US2_10m.ptf
DESIGN SUPERVISOR: GARY SANTY
DESIGNED BY: STANTEC
US ROUTE 2 CROSS SECTIONS - MLX-32

PLOT DATE: 2/24/2012
DRAWN BY: STANTEC
CHECKED BY: STANTEC
SHEET 256 OF 306

2/24/2012 2:34:2 PM V:\0953\active\95300033.0092\Highway\PlotFiles\I33 XS-US2_10m.ptf

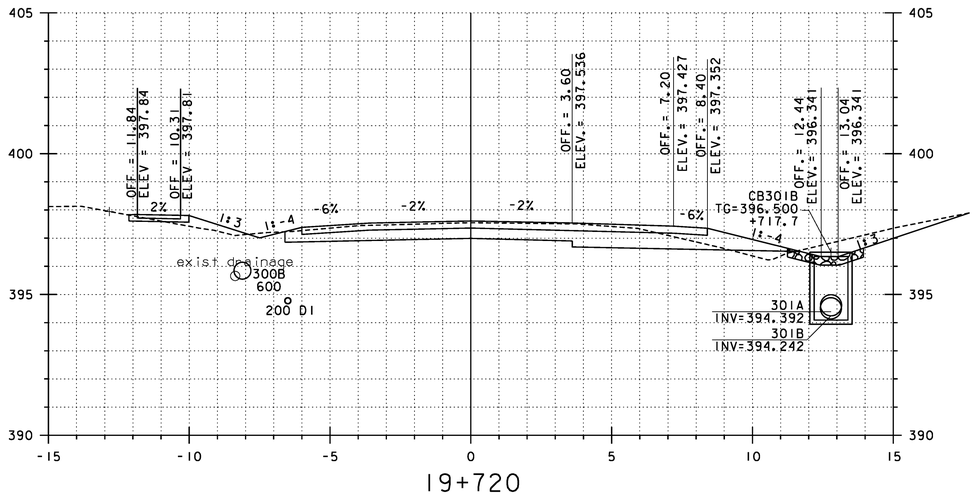

19+720

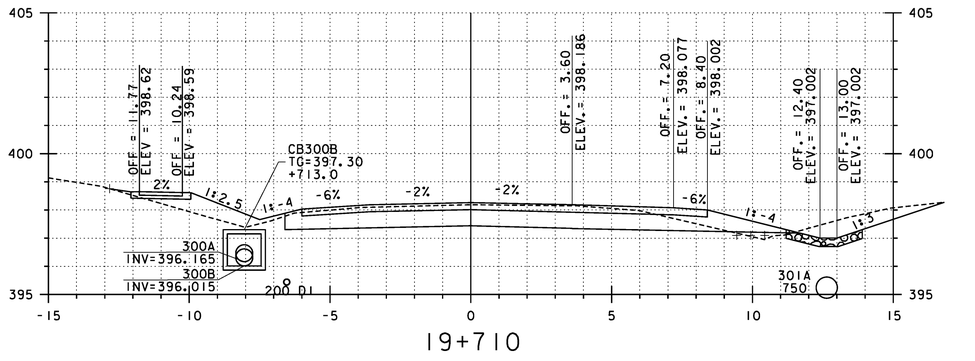

19+710

STA. 19+708.508
END PROJECT F EGC 028-3(32)
END FULL DEPTH CONSTRUCTION
BEGIN COLD PLANE/OVERLAY
BEGIN BOX CUT AND WIDENING

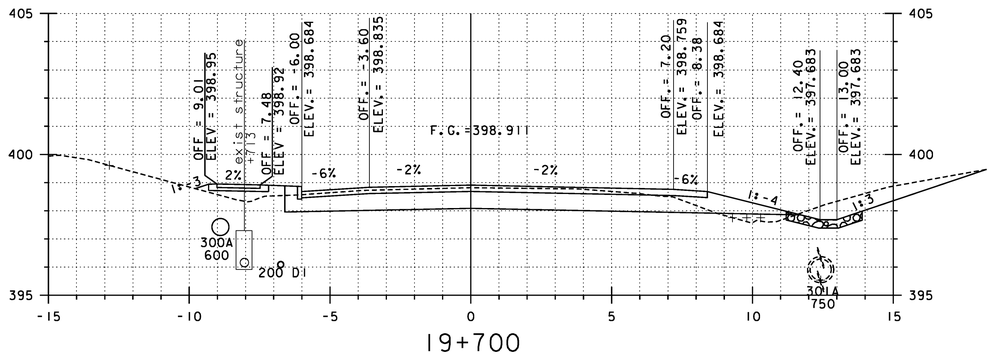

19+700

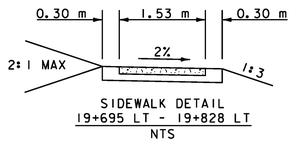

SIDEWALK DETAIL
19+695 LT - 19+828 LT
NTS

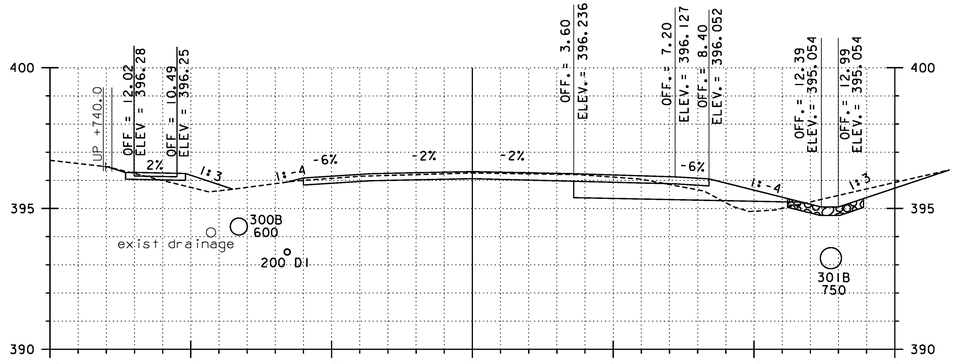

19+740

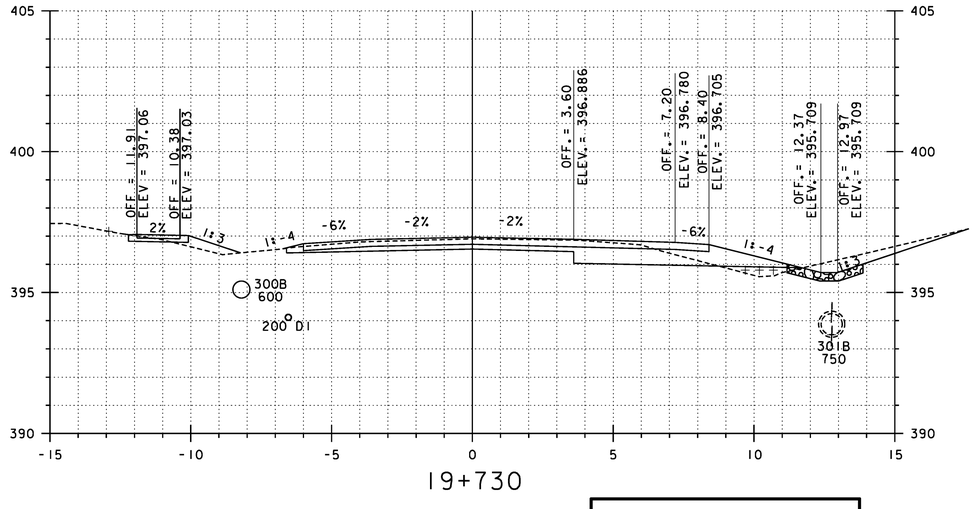

19+730

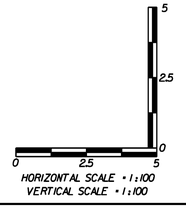

REPLACEMENT SHEETS ISSUED 02/24/12

STA 19+700 TO 19+740

PROJECT NAME: DANVILLE
PROJECT NUMBER: F EGC 028-3(32)

FILE NAME: ...\PlotFiles\133 XS-US2_10m.ptf
DESIGN SUPERVISOR: GARY SANTY
DESIGNED BY: STANTEC
US ROUTE 2 CROSS SECTIONS – MLX-33

PLOT DATE: 2/24/2012
DRAWN BY: STANTEC
CHECKED BY: STANTEC
SHEET 257 OF 306

2/24/2012 2:43:02 PM V:\1853\active\185300033.0092\Highway\PlotFiles\133 XS-US2_10m.ptf

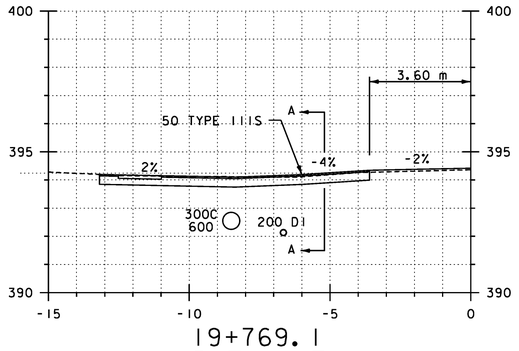

19+769.1
BIT., LT

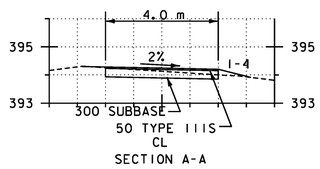

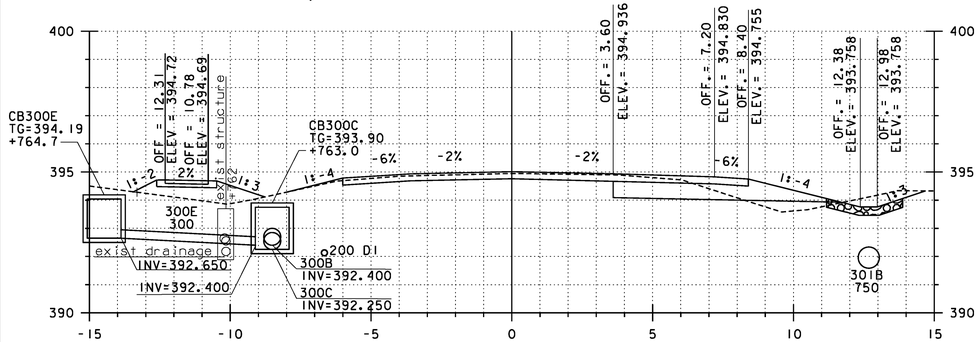

19+760

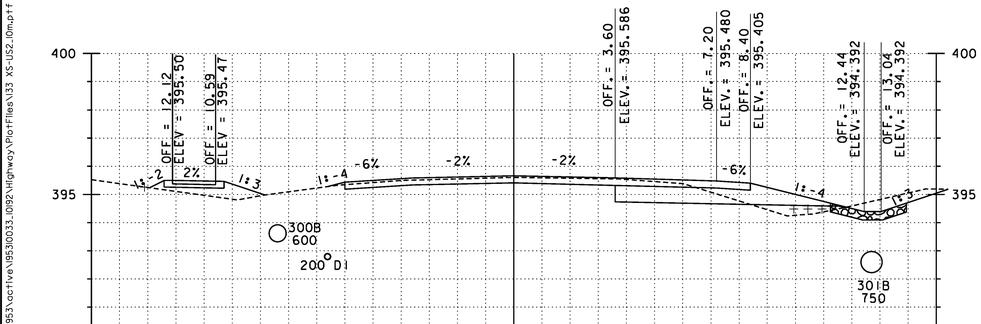

19+750

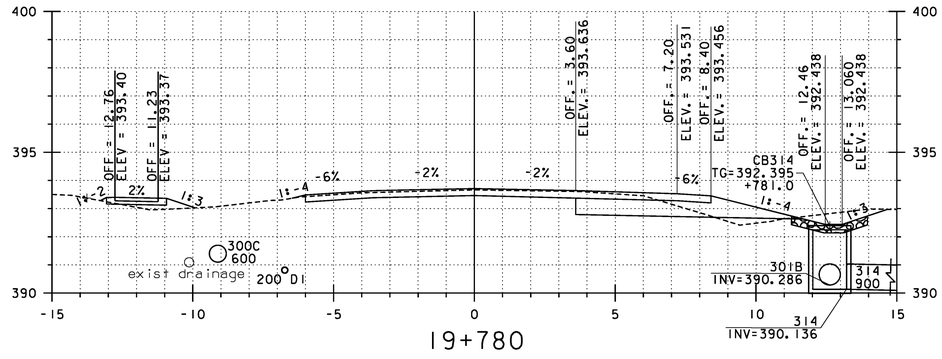

19+780

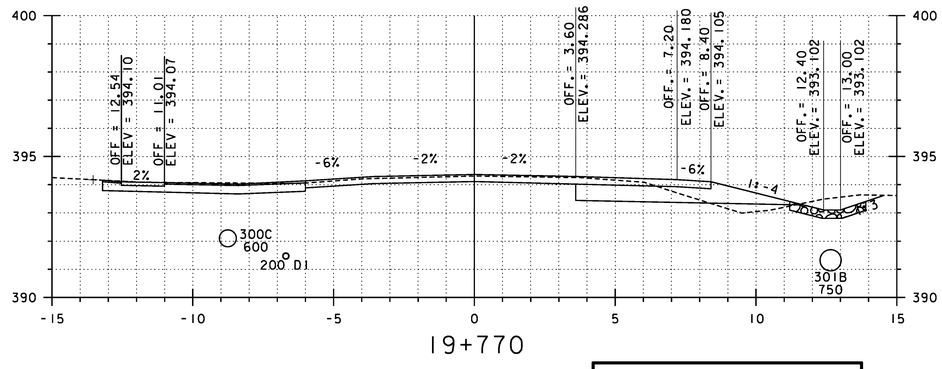

19+770

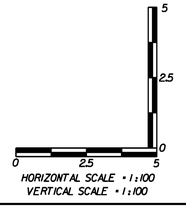

REPLACEMENT SHEETS ISSUED 02/24/12

STA 19+750 TO 19+780

PROJECT NAME: DANVILLE
PROJECT NUMBER: F EGC 028-3(32)

FILE NAME: ...\PlotFiles\133 XS-US2_10m.ptf
DESIGN SUPERVISOR: GARY SANTY
DESIGNED BY: STANTEC
US ROUTE 2 CROSS SECTIONS – MLX-34

PLOT DATE: 2/24/2012
DRAWN BY: STANTEC
CHECKED BY: STANTEC
SHEET 258 OF 306

Stantec

2/24/2012 2:43:3 PM V:\0953\active\95300033.002\Highway\PlotFiles\133 XS-US2_10m.ptf

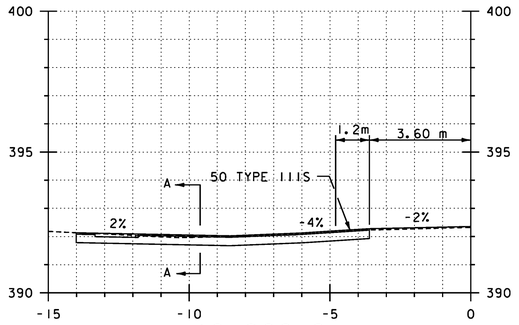

19+800.9
BIT. , LT

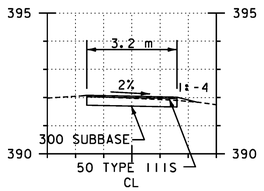

SECTION A-A

NOTES:
1. SEE STORMWATER MANAGEMENT DETAILS SWM-1 FOR WET EXTENDED DETENTION POND GRADING INFORMATION.

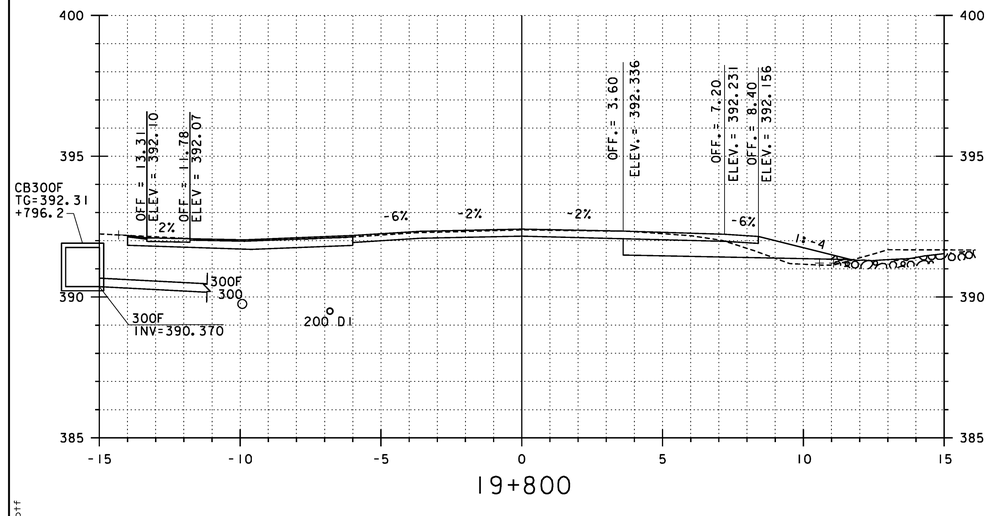

19+800

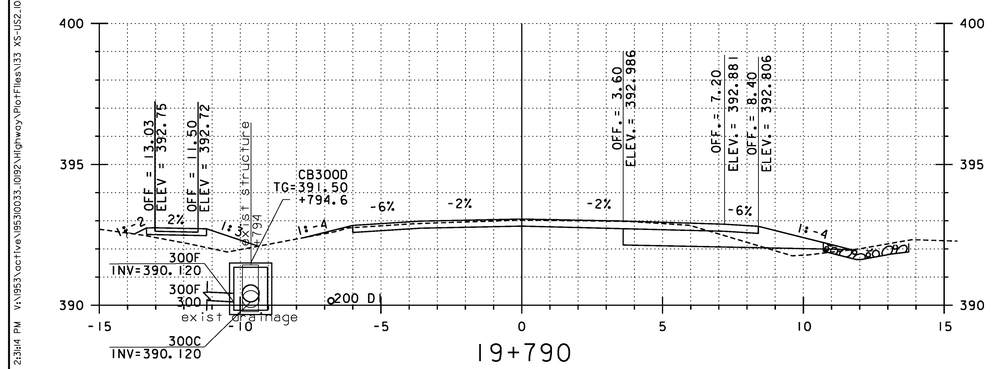

19+790

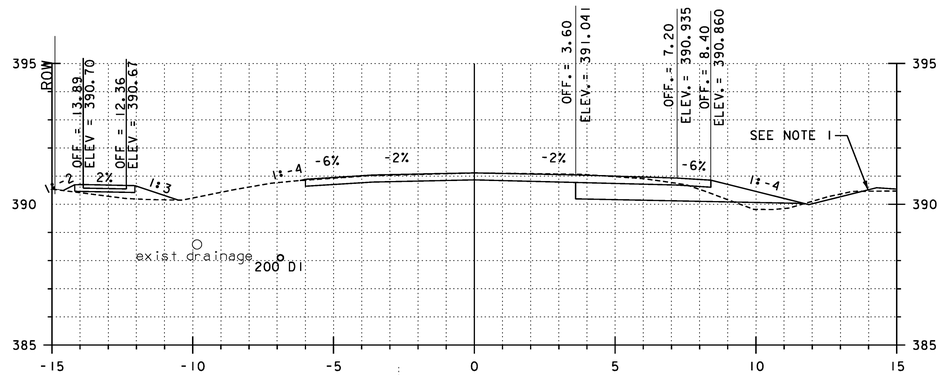

19+820

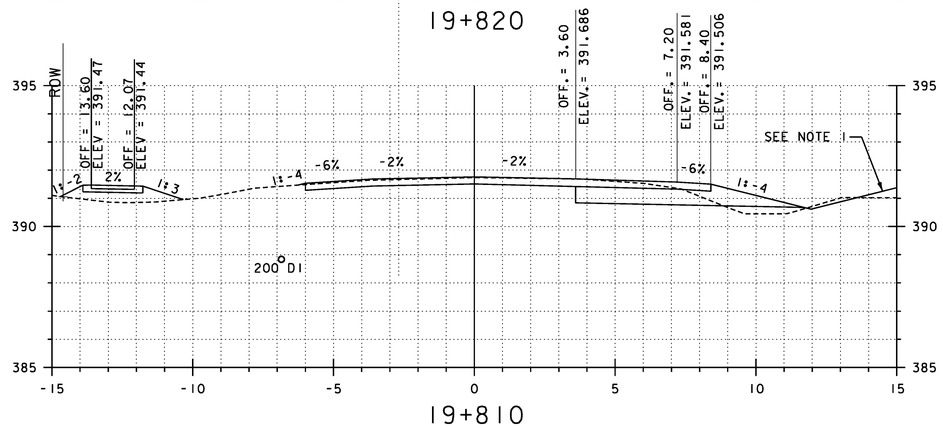

19+810

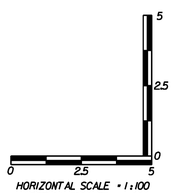

HORIZONTAL SCALE = 1:100
VERTICAL SCALE = 1:100

REPLACEMENT SHEETS ISSUED 02/24/12

STA 19+790 TO 19+820

PROJECT NAME: DANVILLE
PROJECT NUMBER: F EGC 028-3(32)

FILE NAME: ...\PlotFiles\133 XS-US2_10m.ptf
DESIGN SUPERVISOR: GARY SANTY
DESIGNED BY: STANTEC
US ROUTE 2 CROSS SECTIONS – MLX-35

PLOT DATE: 2/24/2012
DRAWN BY: STANTEC
CHECKED BY: STANTEC
SHEET 259 OF 306

2/24/2012 2:38:4 PM W:\9853\active\9853003.0092\Highway\PlotFiles\133 XS-US2_10m.ptf

VDOT Metric

NOTES:
1. SEE STORMWATER MANAGEMENT DETAILS SWM-1 FOR WET EXTENDED DETENTION POND GRADING INFORMATION.

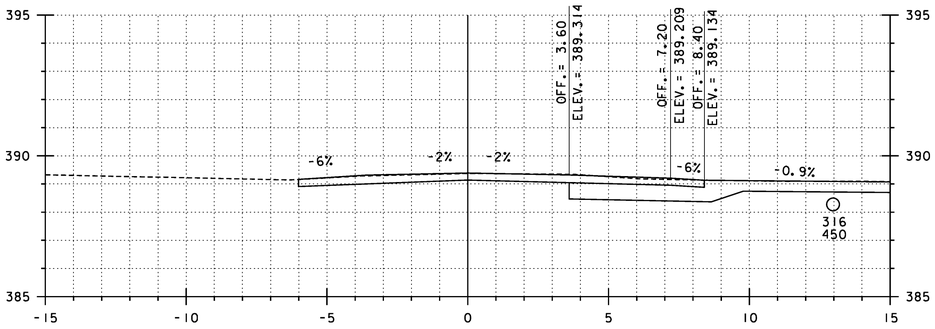

19+850

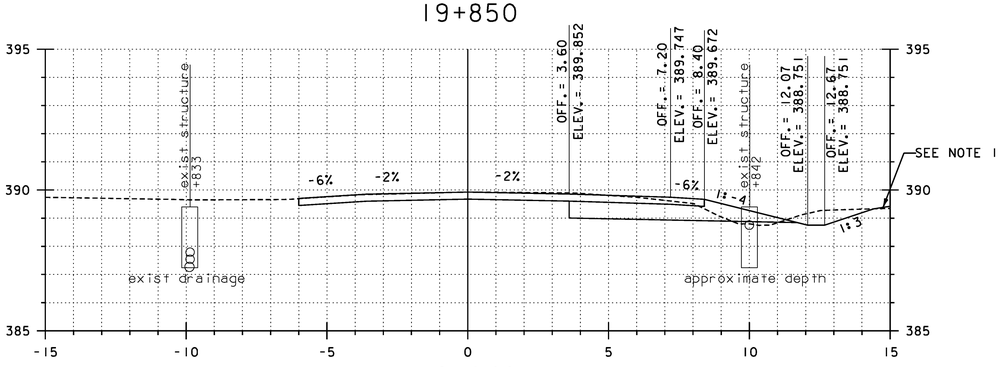

19+840

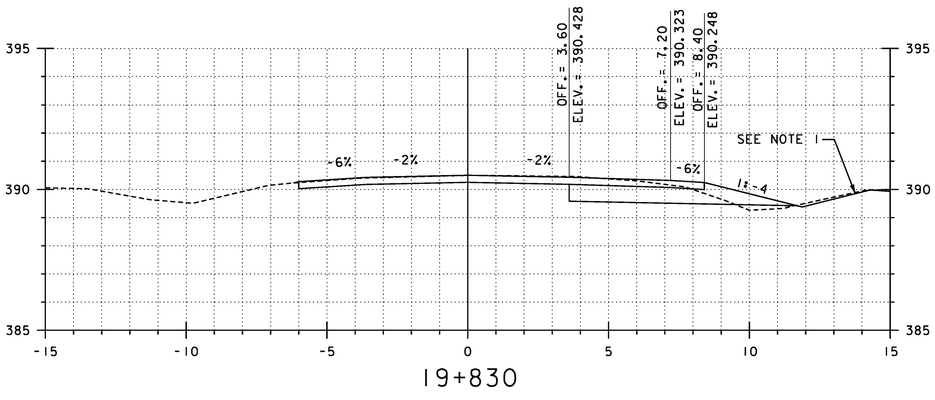

19+830

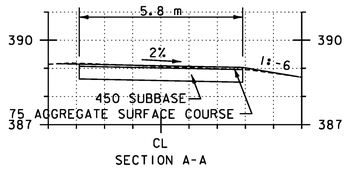

SECTION A-A

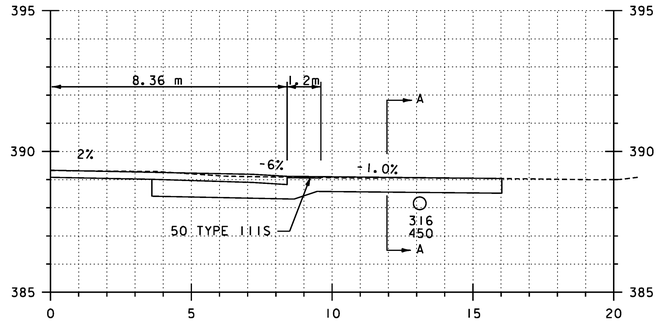

19+851.1
GRAVEL, RT

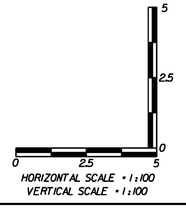

HORIZONTAL SCALE • 1:100
VERTICAL SCALE • 1:100

REPLACEMENT SHEETS ISSUED 02/24/12

STA 19+830 TO 19+851.1

PROJECT NAME: DANVILLE
PROJECT NUMBER: F EGC 028-3(32)

FILE NAME: ...\PlotFiles\133 XS-US2_10m.ptf
DESIGN SUPERVISOR: GARY SANTY
DESIGNED BY: STANTEC
US ROUTE 2 CROSS SECTIONS – MLX-36

PLOT DATE: 2/24/2012
DRAWN BY: STANTEC
CHECKED BY: STANTEC
SHEET 260 OF 306

2/24/2012 2:36:5 PM V:\0953\active\95300033.092\Highway\PlotFiles\133 XS-US2_10m.ptf

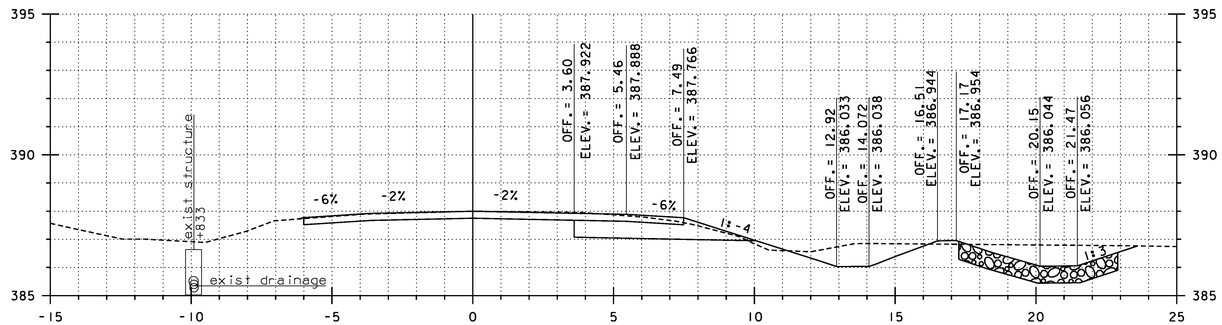

19+880

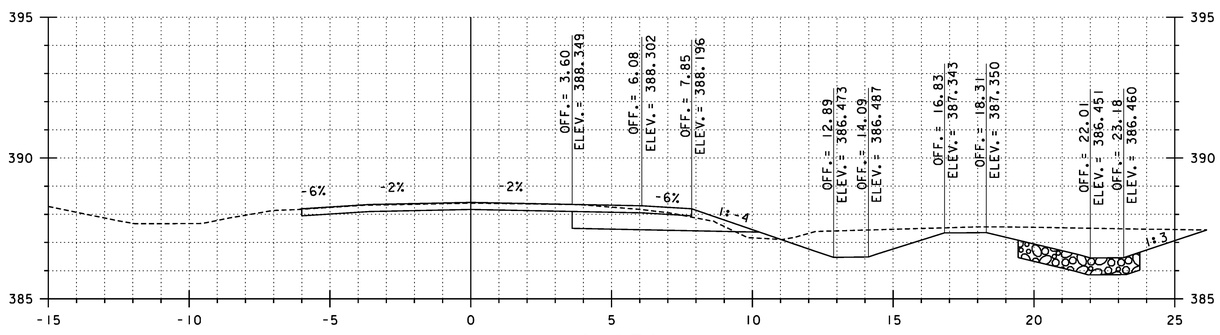

19+870

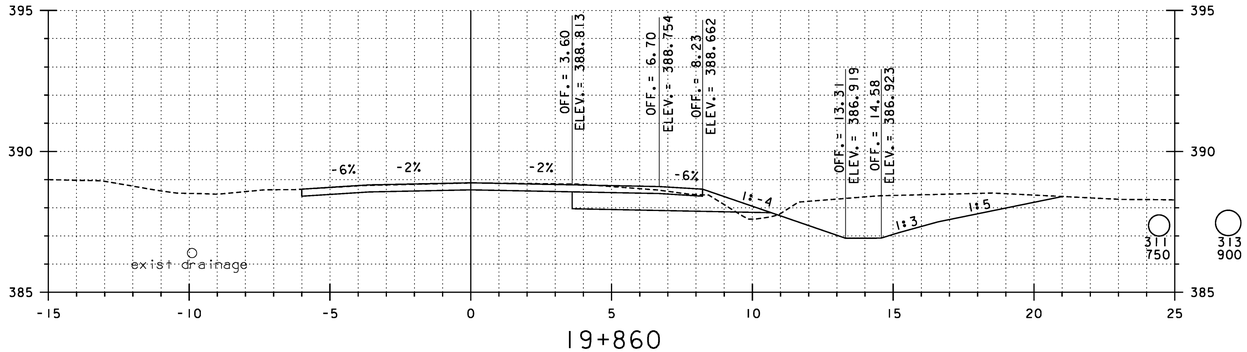

19+860

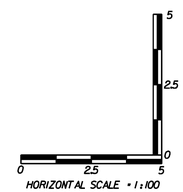

HORIZONTAL SCALE = 1:100
VERTICAL SCALE = 1:100

REPLACEMENT SHEETS
ISSUED 02/24/12

STA 19+860 TO 19+880

PROJECT NAME: DANVILLE
PROJECT NUMBER: F EGC 028-3(32)

FILE NAME: ...\PlotFiles\133 XS-US2_10m.ptf
DESIGN SUPERVISOR: GARY SANTY
DESIGNED BY: STANTEC
US ROUTE 2 CROSS SECTIONS - MLX-37

PLOT DATE: 2/24/2012
DRAWN BY: STANTEC
CHECKED BY: STANTEC
SHEET 261 OF 306

Stantec

2/24/2012 2:31:15 PM V:\1953\active\195310033_10192\Highway\PlotFiles\133 XS-US2_10m.ptf

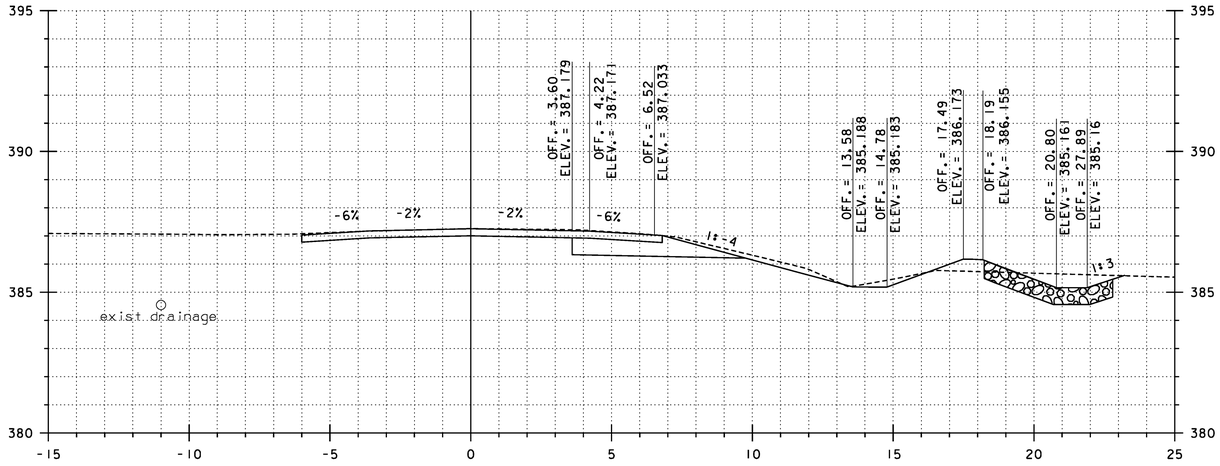

19+900

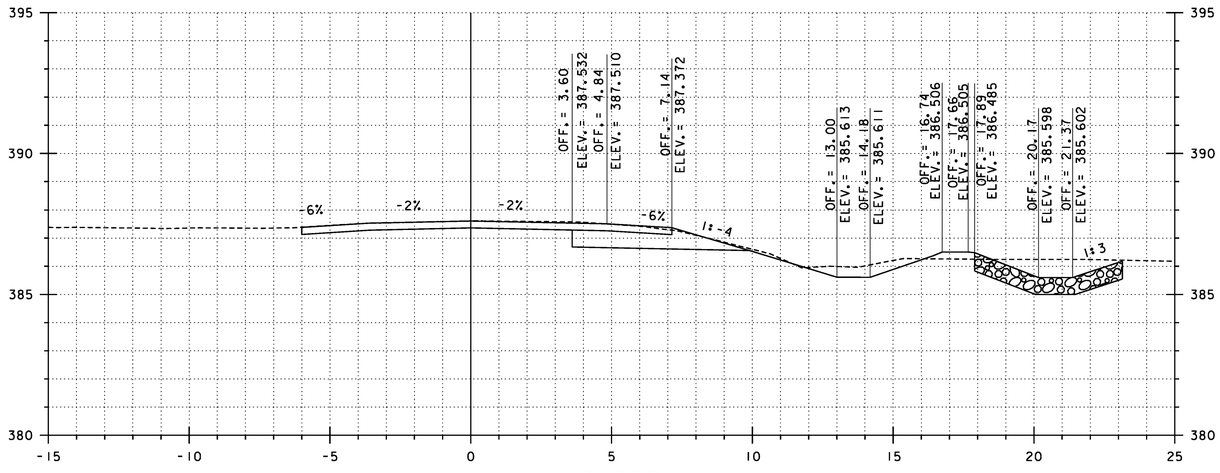

19+890

HORIZONTAL SCALE • 1:100
VERTICAL SCALE • 1:100

REPLACEMENT SHEETS ISSUED 02/24/12

STA 19+890 TO 19+900

PROJECT NAME: DANVILLE
PROJECT NUMBER: F EGC 028-3(32)

FILE NAME: ...\PlotFiles\133 XS-US2_10m.ptf
DESIGN SUPERVISOR: GARY SANTY
DESIGNED BY: STANTEC
US ROUTE 2 CROSS SECTIONS – MLX-38

PLOT DATE: 2/24/2012
DRAWN BY: STANTEC
CHECKED BY: STANTEC
SHEET 262 OF 306

2/24/2012 2:36:6 PM V:\1953\active\195300033_0092\Highways\PlotFiles\133 XS-US2_10m.ptf

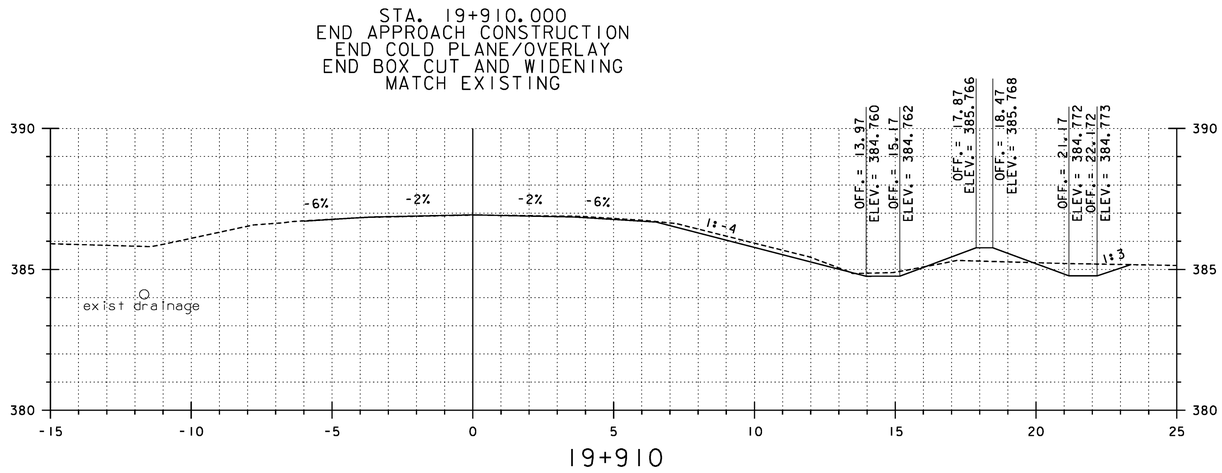

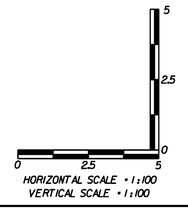

REPLACEMENT SHEETS
ISSUED 02/24/12

STA 19+910

PROJECT NAME: DANVILLE
PROJECT NUMBER: F EGC 028-3(32)

FILE NAME: ...\PlotFiles\133 XS-US2_10m.ptf
DESIGN SUPERVISOR: GARY SANTY
DESIGNED BY: STANTEC
US ROUTE 2 CROSS SECTIONS – MLX-39

PLOT DATE: 2/24/2012
DRAWN BY: STANTEC
CHECKED BY: STANTEC
SHEET 263 OF 306

Stantec

2/24/2012 2:31:16 PM V:\1953\active\195310033_10192\Highway\PlotFiles\133 XS-US2_10m.ptf

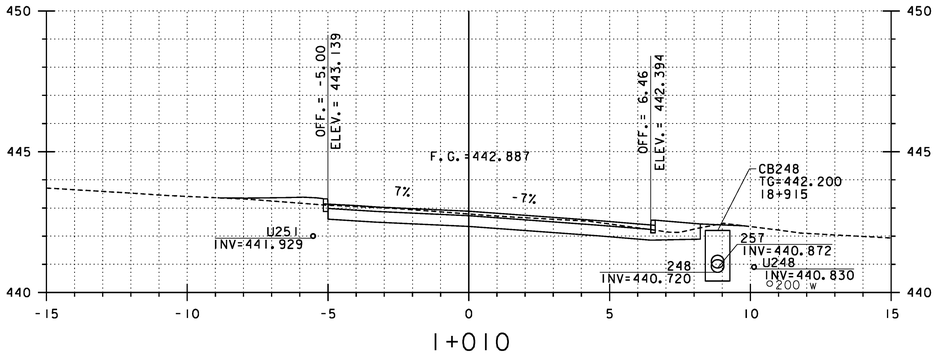

1+010

WALDEN HILL ROAD STA. 1+000.000=
U.S. ROUTE 2 STA. 18+905.941
MATCH EXISTING

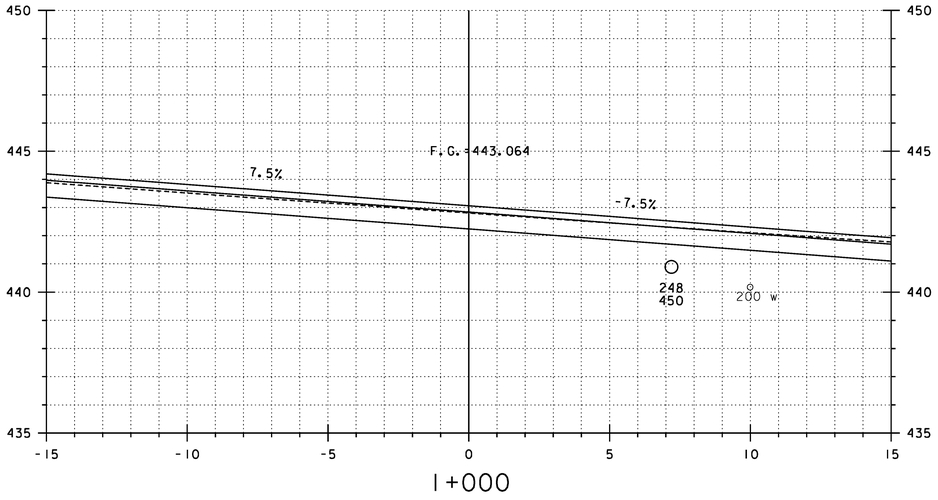

1+000

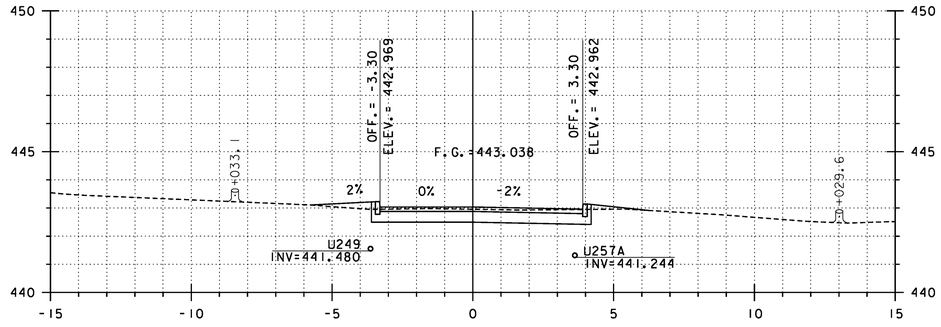

1+030

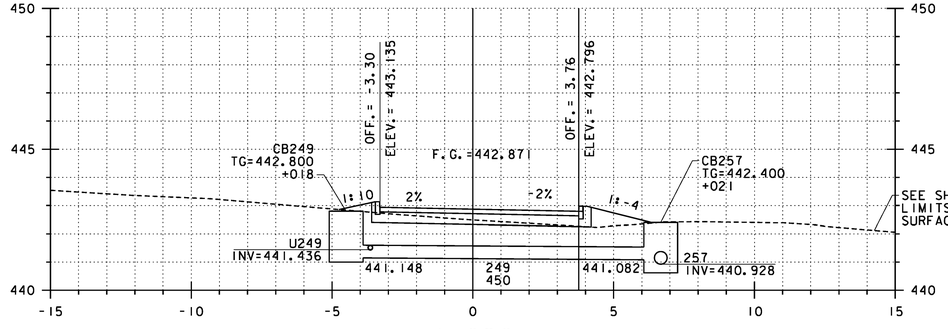

1+020

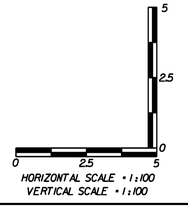

REPLACEMENT SHEETS
ISSUED 02/24/12

STA 1+000 TO 1+030

PROJECT NAME: DANVILLE
PROJECT NUMBER: F EGC 028-3(32)

FILE NAME: ...\134 XS-Walden_10m.ptf
DESIGN SUPERVISOR: GARY SANTY
DESIGNED BY: STANTEC
WALDEN HILL CROSS SECTIONS – WHX-1

PLOT DATE: 2/24/2012
DRAWN BY: STANTEC
CHECKED BY: STANTEC
SHEET 264 OF 306

2/24/2012 2:36:17 PM W:\1953\active\195300033.0092\Highway\PlotFiles\134 XS-Walden_10m.ptf

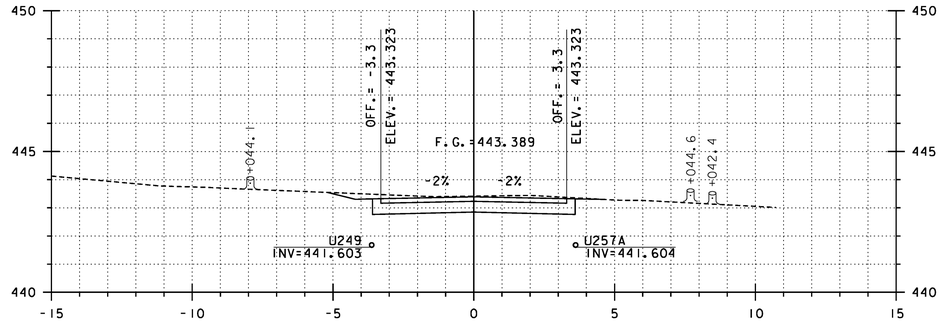

I+040

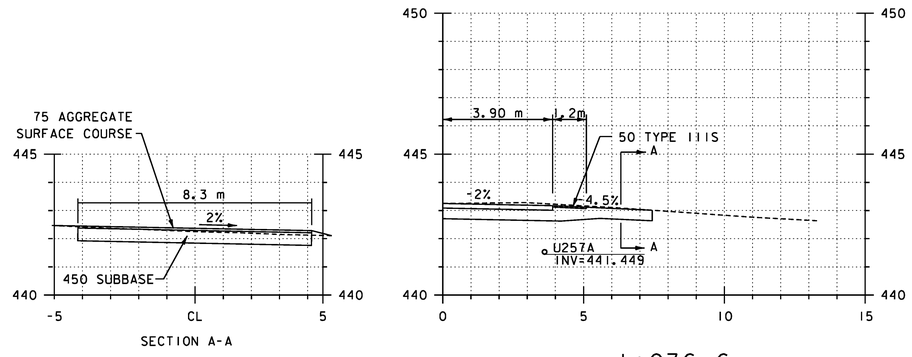

I+036.6
GRAVEL , RT

WALDEN HILL ROAD STA. 1+067.500
BEGIN APPROACH CONSTRUCTION

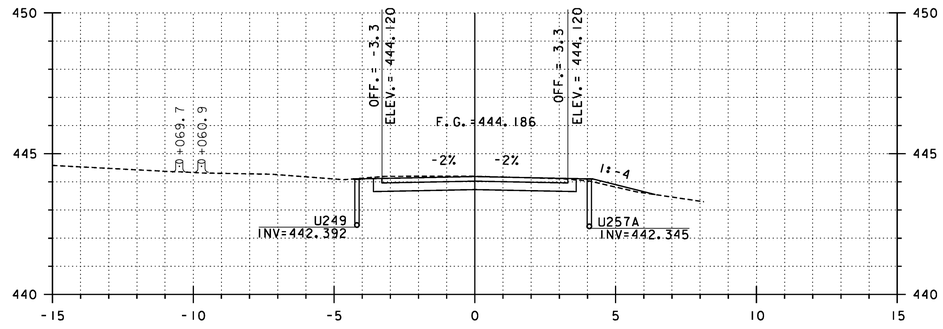

I+060

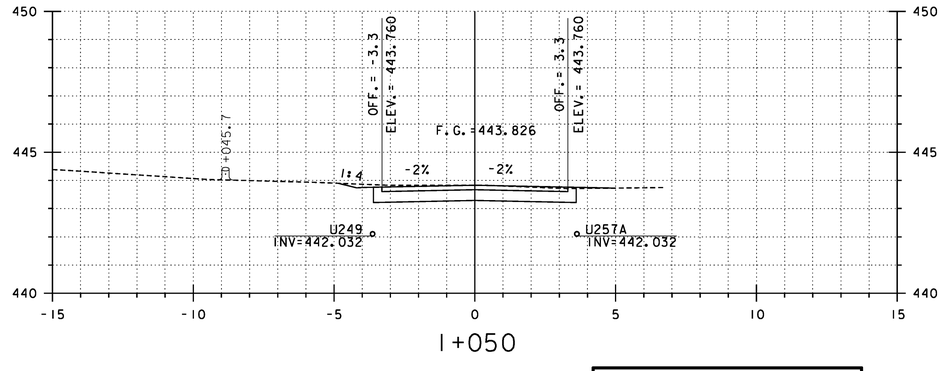

I+050

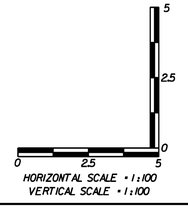

REPLACEMENT SHEETS
ISSUED 02/24/12

STA 1+036.6 TO 1+067.500

PROJECT NAME: DANVILLE
PROJECT NUMBER: F EGC 028-3(32)

FILE NAME: ...\134 XS-Walden_10m.ptf
DESIGN SUPERVISOR: GARY SANTY
DESIGNED BY: STANTEC
WALDEN HILL CROSS SECTIONS - WHX-2

PLOT DATE: 2/24/2012
DRAWN BY: STANTEC
CHECKED BY: STANTEC
SHEET 265 OF 306

Stantec

2/24/2012 2:39:08 PM V:\1953\active\195300033_0092\Highway\Plotfiles\134 XS-Walden_10m.ptf

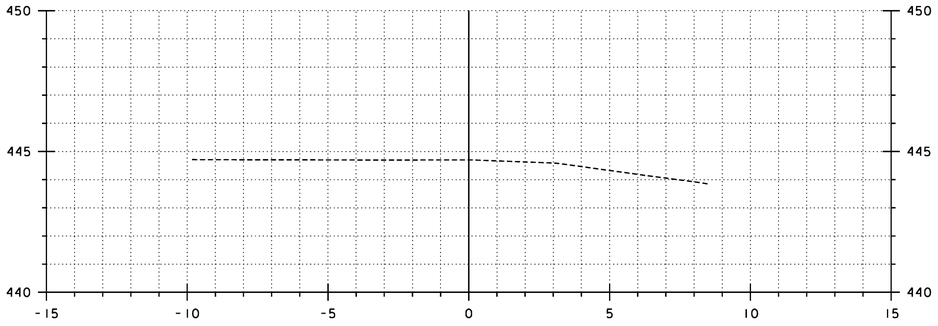

1+076

WALDEN HILL ROAD STA. 1+075.500
END APPROACH CONSTRUCTION
MATCH EXISTING

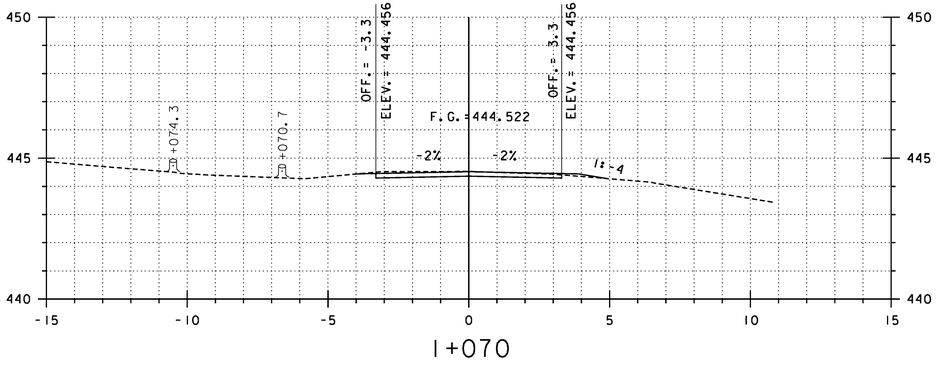

1+070

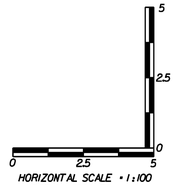

HORIZONTAL SCALE = 1:100
VERTICAL SCALE = 1:100

REPLACEMENT SHEETS ISSUED 02/24/12

STA 1+070 TO 1+076

PROJECT NAME: DANVILLE
PROJECT NUMBER: F EGC 028-3(32)

FILE NAME: ...\134 XS-Walden_10m.ptf
DESIGN SUPERVISOR: GARY SANTY
DESIGNED BY: STANTEC
WALDEN HILL CROSS SECTIONS - WHX-3

PLOT DATE: 2/24/2012
DRAWN BY: STANTEC
CHECKED BY: STANTEC
SHEET 266 OF 306

2/24/2012 2:38:18 PM V:\0953\active\95310033.0092\Highway\Plotfiles\134 XS-Walden_10m.ptf

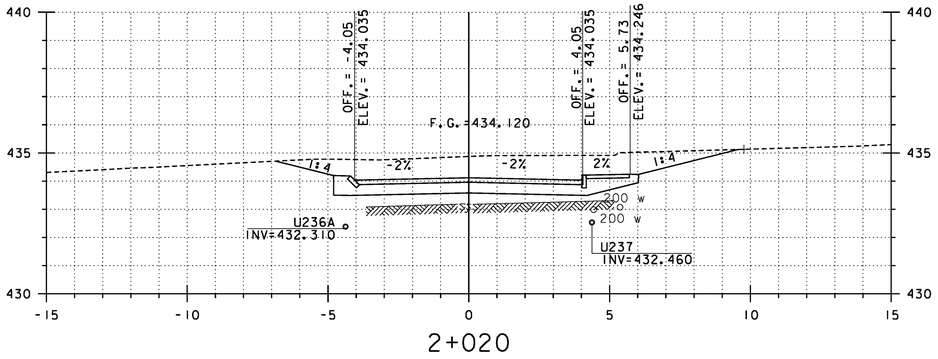

2+020

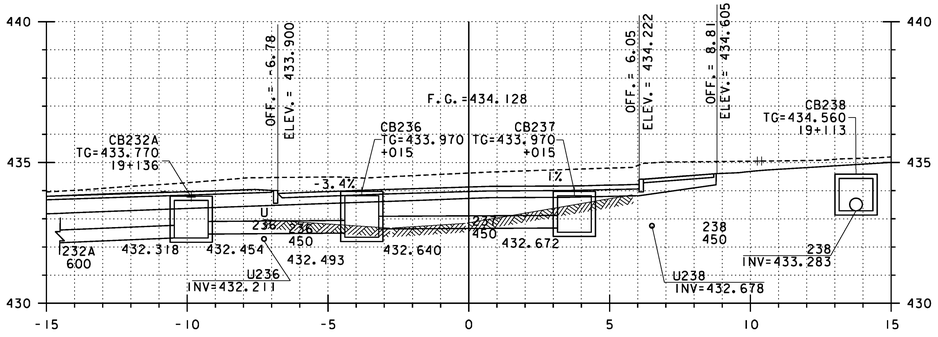

2+010

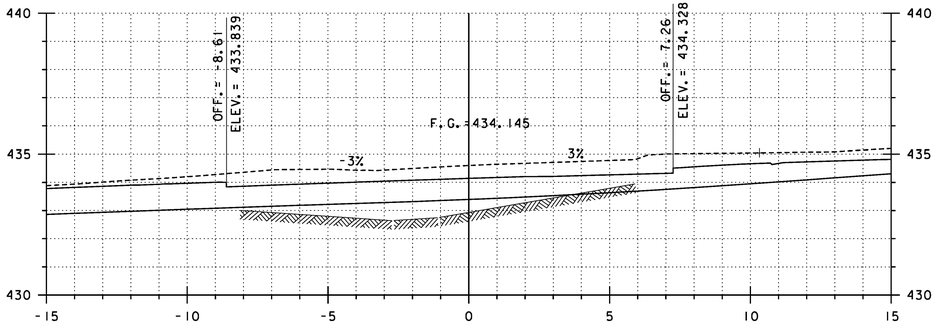

2+009

PARK STREET STA. 2+000.000=
U.S. ROUTE 2 STA. 19+126.333

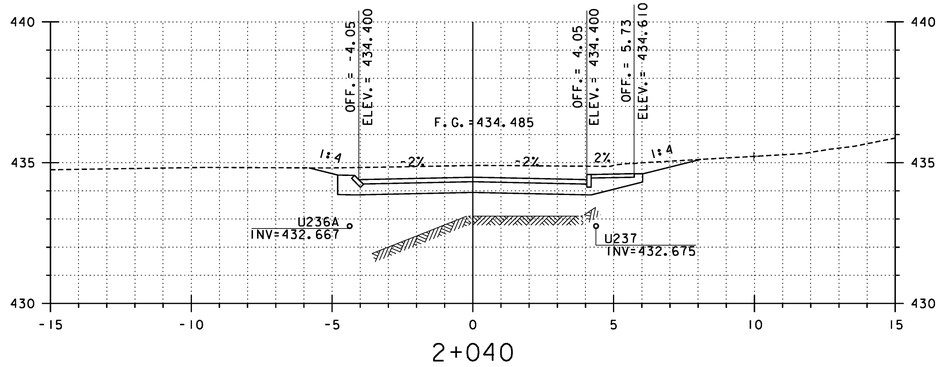

2+040

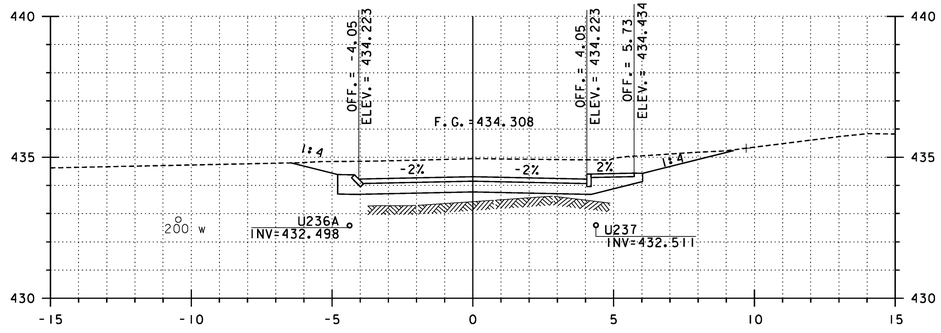

2+030

HORIZONTAL SCALE • 1:100
VERTICAL SCALE • 1:100

REPLACEMENT SHEETS
ISSUED 02/24/12

STA 2+000.000 TO 2+040

PROJECT NAME: DANVILLE
PROJECT NUMBER: F EGC 028-3(32)

FILE NAME: ...\PlotFiles\135 XS-Park_10m.ptf
DESIGN SUPERVISOR: GARY SANTY
DESIGNED BY: STANTEC
PARK STREET CROSS SECTIONS – PSX-1

PLOT DATE: 2/24/2012
DRAWN BY: STANTEC
CHECKED BY: STANTEC
SHEET 267 OF 306

Stantec

2/24/2012 2:38:9 PM V:\0953\active\95300033.0092\Highway\PlotFiles\135 XS-Park_10m.ptf

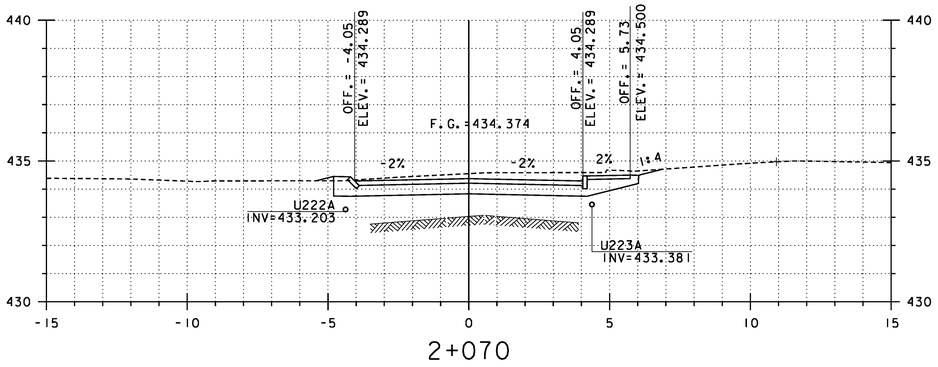

2+070

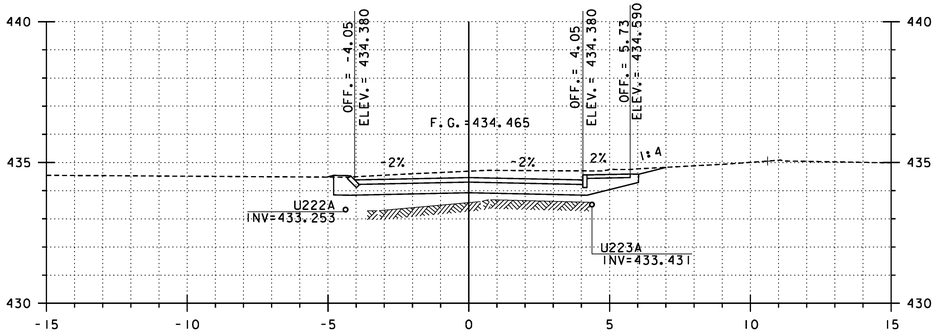

2+060

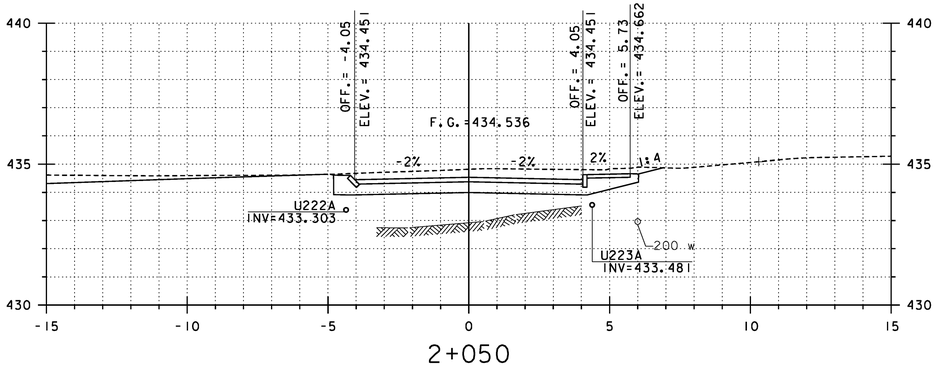

2+050

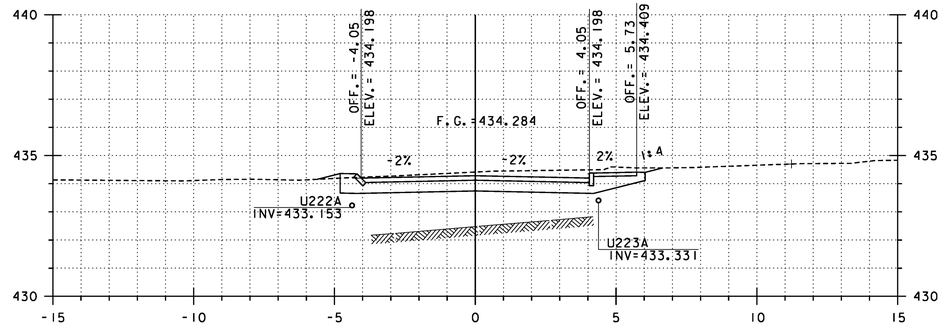

2+080

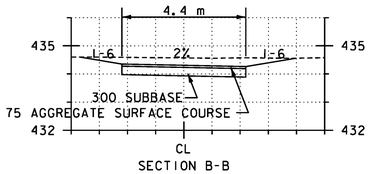

SECTION B-B

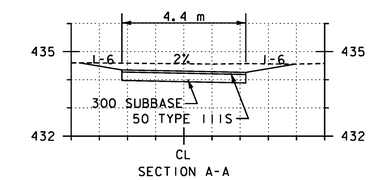

SECTION A-A

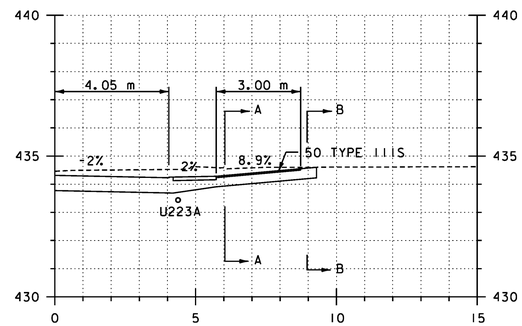

2+076.8
GRAVEL, RT

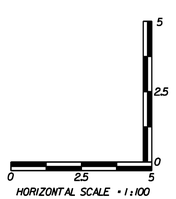

REPLACEMENT SHEETS ISSUED 02/24/12

STA 2+050 TO 2+080

PROJECT NAME: DANVILLE
PROJECT NUMBER: F EGC 028-3(32)

FILE NAME: ...\PlotFiles\I35 XS-Park_10m.ptf
DESIGN SUPERVISOR: GARY SANTY
DESIGNED BY: STANTEC
PARK STREET CROSS SECTIONS – PSX-2

PLOT DATE: 2/24/2012
DRAWN BY: STANTEC
CHECKED BY: STANTEC
SHEET 268 OF 306

2/24/2012 2:39:20 PM V:\1953\active\195300033.0092\Highway\PlotFiles\I35 XS-Park_10m.ptf

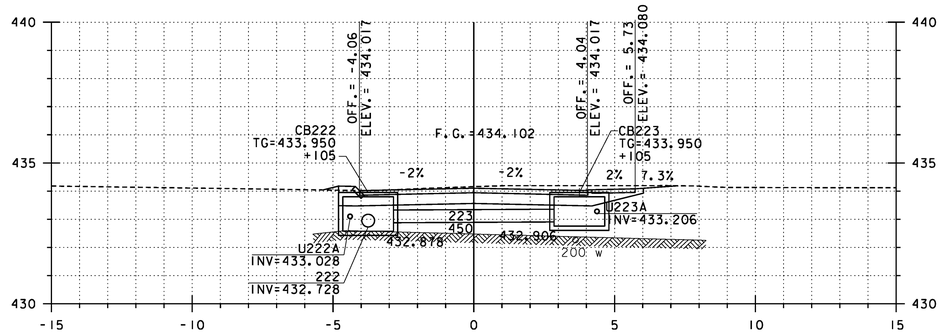

2+100

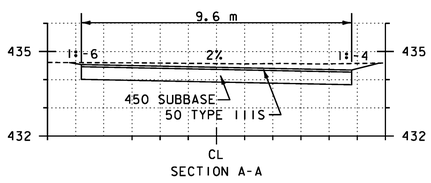

SECTION A-A

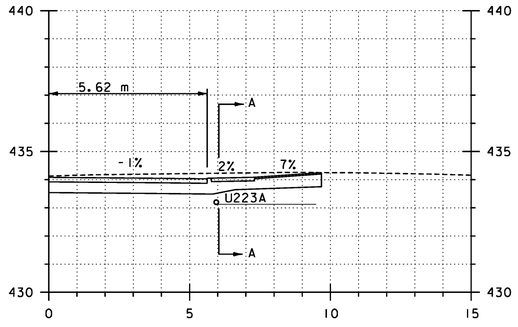

2+096.7
BIT., RT

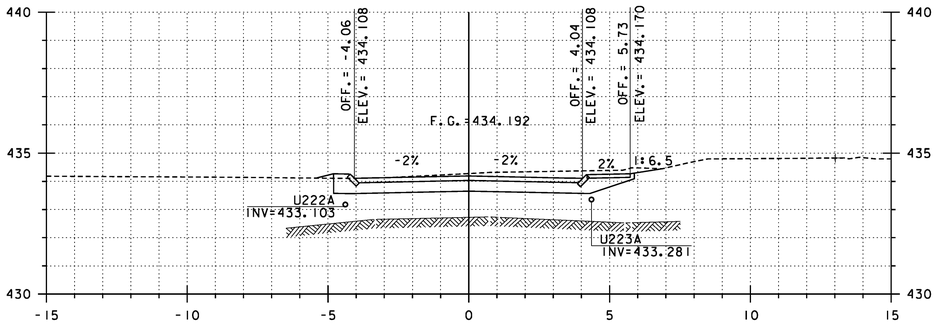

2+090

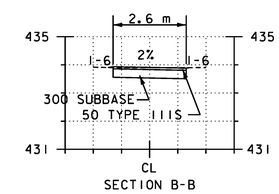

SECTION B-B

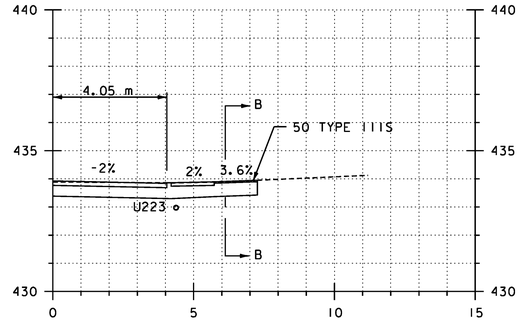

2+119.5
BIT., RT

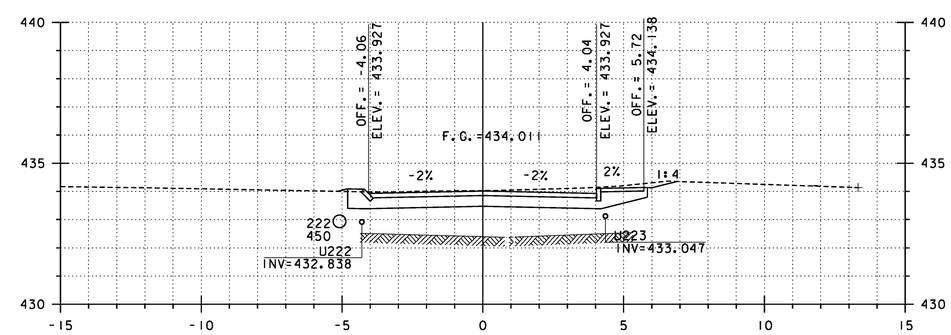

2+110

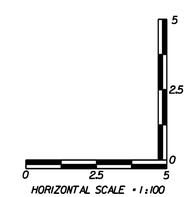

HORIZONTAL SCALE = 1:100
VERTICAL SCALE = 1:100

REPLACEMENT SHEETS ISSUED 02/24/12

STA 2+090 TO 2+119.5

PROJECT NAME: DANVILLE
PROJECT NUMBER: F EGC 028-3(32)

FILE NAME: ...\PlotFiles\135 XS-Park_10m.ptf
DESIGN SUPERVISOR: GARY SANTY
DESIGNED BY: STANTEC
PARK STREET CROSS SECTIONS - PSX-3

PLOT DATE: 2/24/2012
DRAWN BY: STANTEC
CHECKED BY: STANTEC
SHEET 269 OF 306

Stantec

2/24/2012 2:31:20 PM V:\1953\active\195310033_10192\Highway\PlotFiles\135 XS-Park_10m.ptf

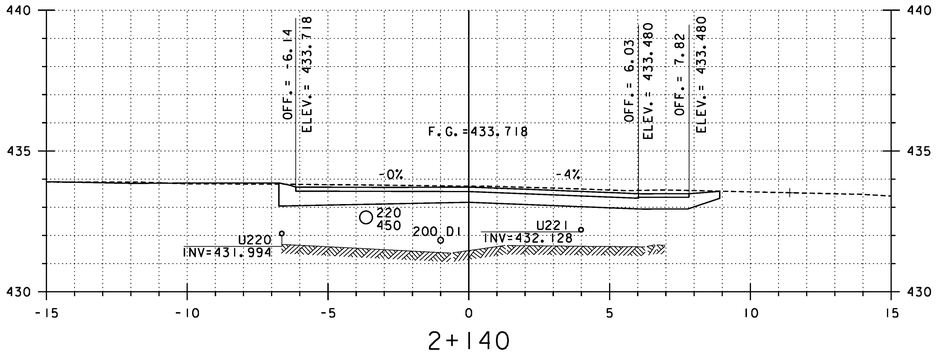

2+140

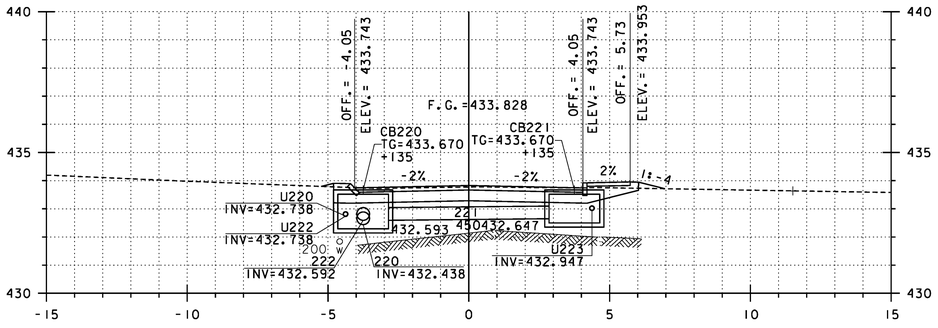

2+130

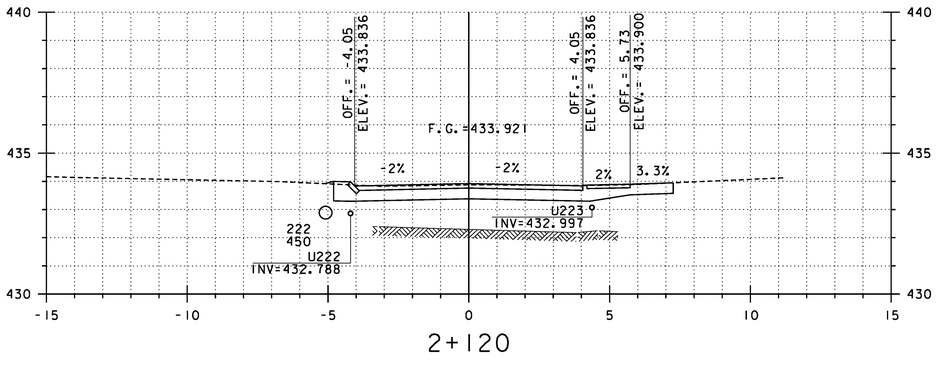

2+120

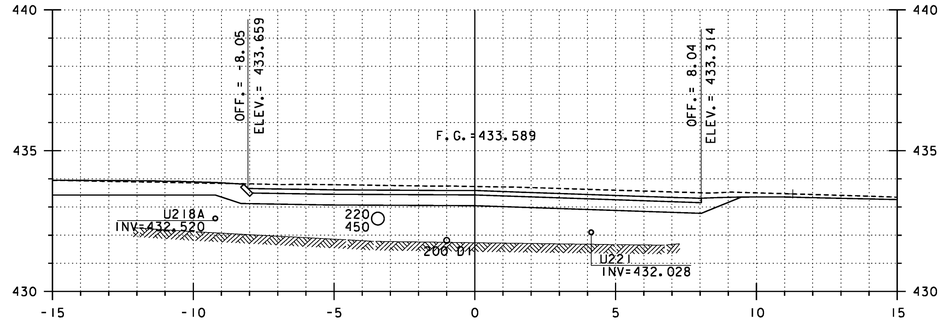

2+150

PARK STREET STA. 2+145.691=
PEACHAM ROAD STA. 4+106.333

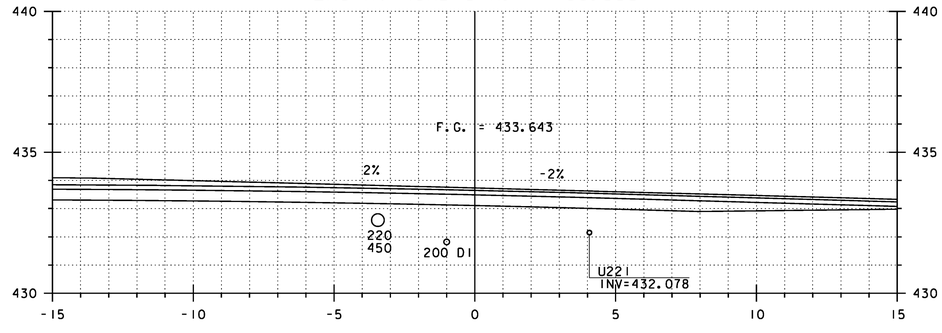

2+145.691

HORIZONTAL SCALE • 1:100
VERTICAL SCALE • 1:100

REPLACEMENT SHEETS ISSUED 02/24/12

STA 2+120 TO 2+150

PROJECT NAME: DANVILLE
PROJECT NUMBER: F EGC 028-3(32)

FILE NAME: ...\PlotFiles\135 XS-Park_10m.ptf
DESIGN SUPERVISOR: GARY SANTY
DESIGNED BY: STANTEC
PARK STREET CROSS SECTIONS – PSX-4

PLOT DATE: 2/24/2012
DRAWN BY: STANTEC
CHECKED BY: STANTEC
SHEET 270 OF 306

2/24/2012 2:34:21 PM V:\09531\active\95310033.0092\Highway\PlotFiles\135 XS-Park_10m.ptf

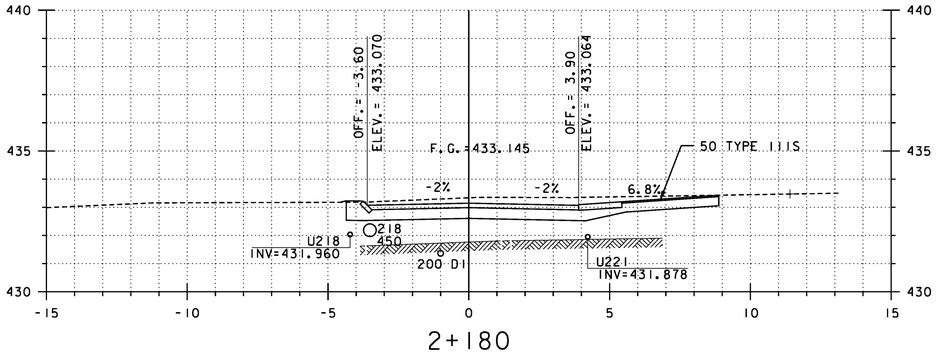

2+180

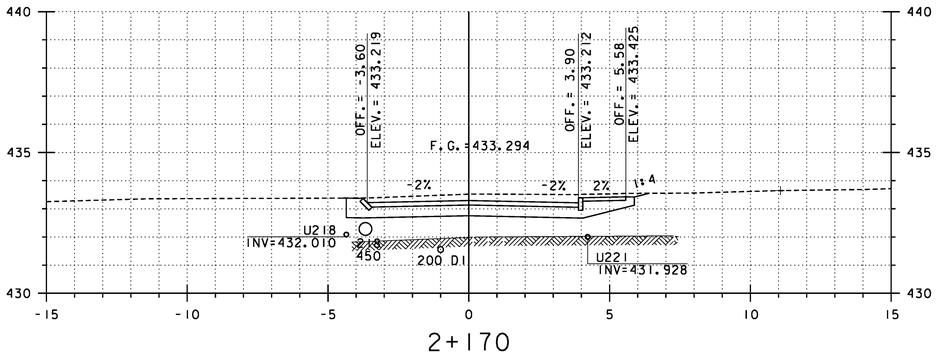

2+170

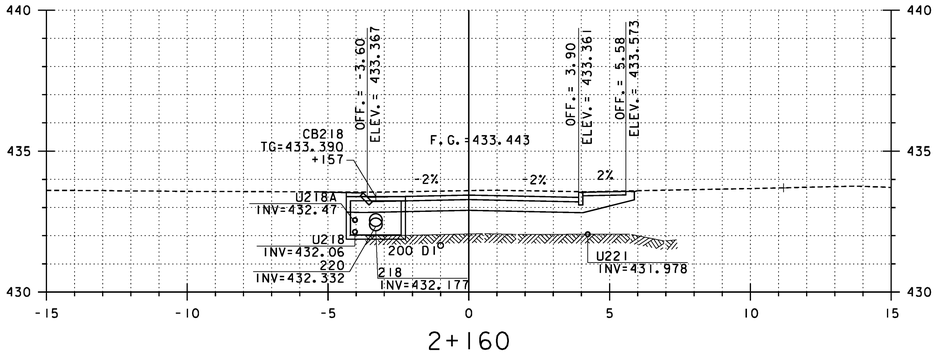

2+160

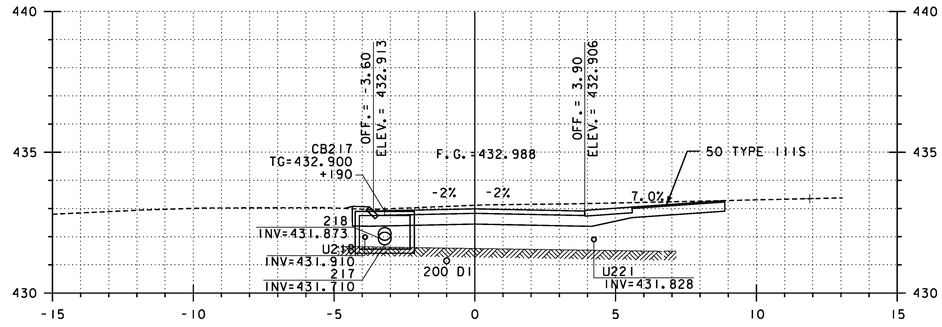

2+190

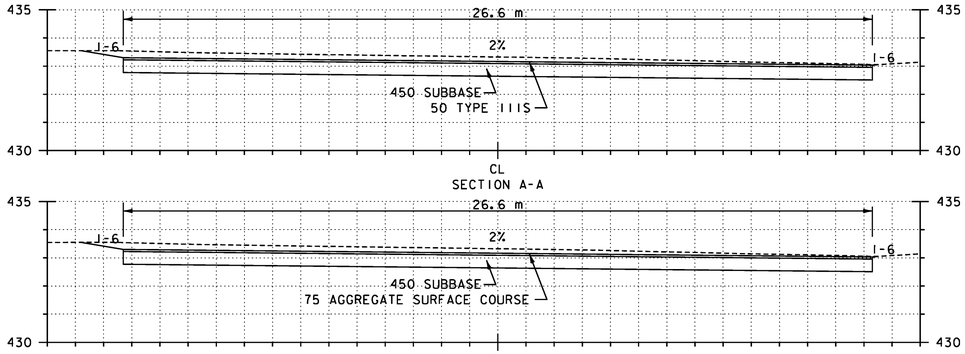

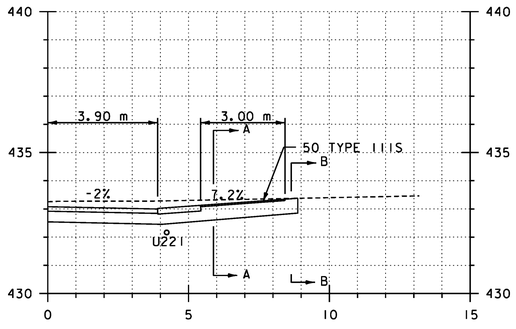

2+184.2
GRAVEL, RT

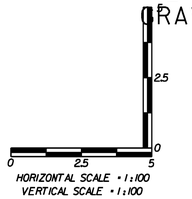

REPLACEMENT SHEETS ISSUED 02/24/12

STA 2+160 TO 2+190

PROJECT NAME: DANVILLE
PROJECT NUMBER: F EGC 028-3(32)

FILE NAME: ...\PlotFiles\I35 XS-Park_10m.ptf
DESIGN SUPERVISOR: GARY SANTY
DESIGNED BY: STANTEC
PARK STREET CROSS SECTIONS – PSX-5

PLOT DATE: 2/24/2012
DRAWN BY: STANTEC
CHECKED BY: STANTEC
SHEET 271 OF 306

2/24/2012 2:39:22 PM V:\1953\active\195330033.0092\Highway\PlotFiles\I35 XS-Park_10m.ptf

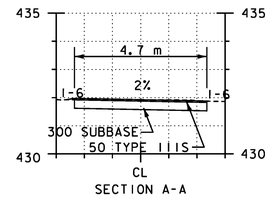

SECTION A-A

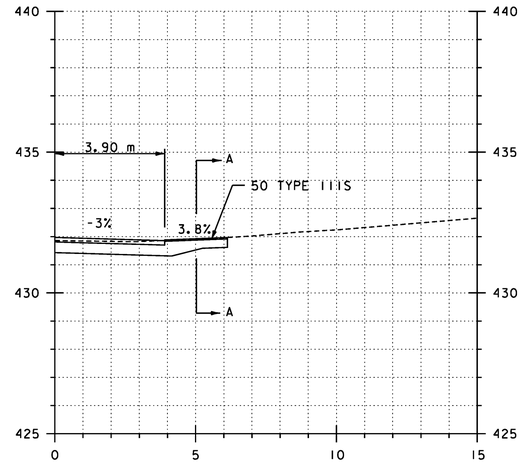

2+224.7
BIT., RT

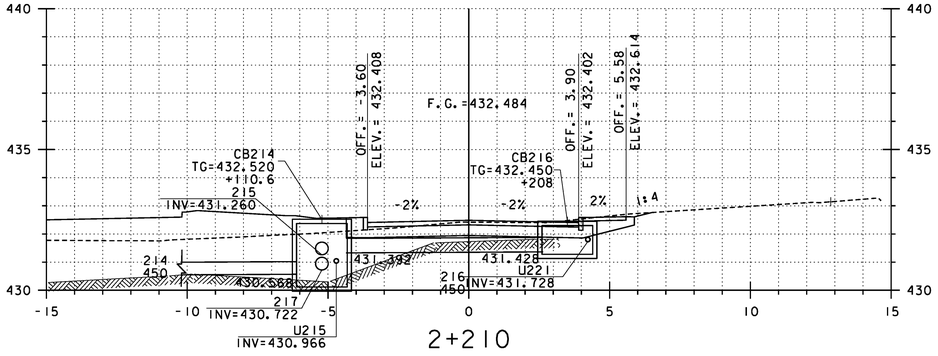

2+210

PARK STREET STA. 2+200.430=
SMITH STREET STA. 5+115.963
INTERSECTION, LEFT

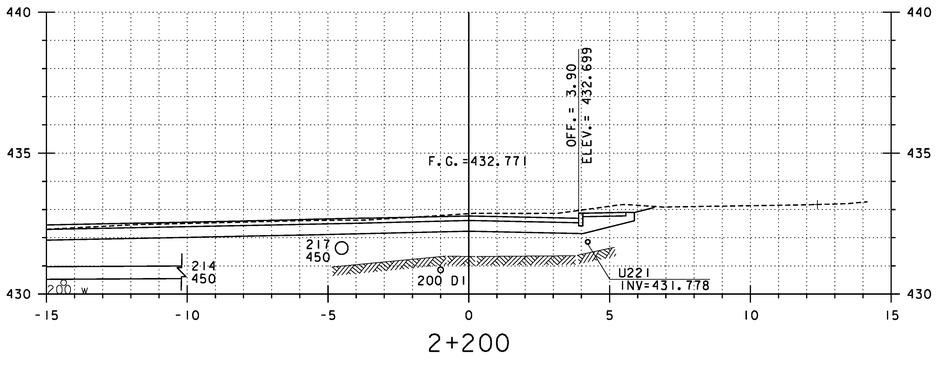

2+200

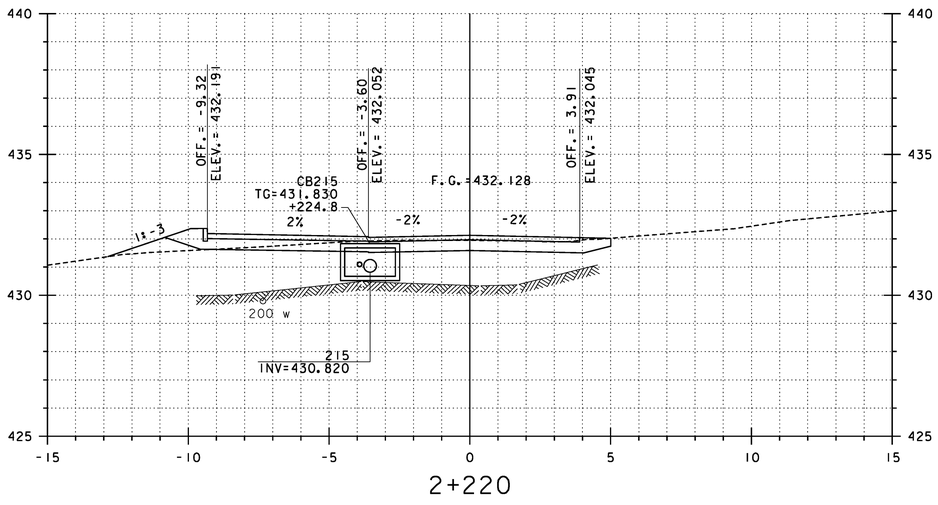

2+220

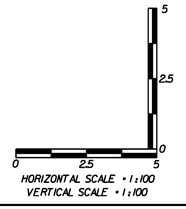

REPLACEMENT SHEETS ISSUED 02/24/12

STA 2+200 TO 2+224.7

PROJECT NAME: DANVILLE
PROJECT NUMBER: F EGC 028-3(32)

FILE NAME: ...\PlotFiles\135 XS-Park_10m.ptf
DESIGN SUPERVISOR: GARY SANTY
DESIGNED BY: STANTEC
PARK STREET CROSS SECTIONS - PSX-6

PLOT DATE: 2/24/2012
DRAWN BY: STANTEC
CHECKED BY: STANTEC
SHEET 272 OF 306

Stantec

2/24/2012 2:43:23 PM V:\1953\active\195300033_0092\Highway\PlotFiles\135 XS-Park_10m.ptf

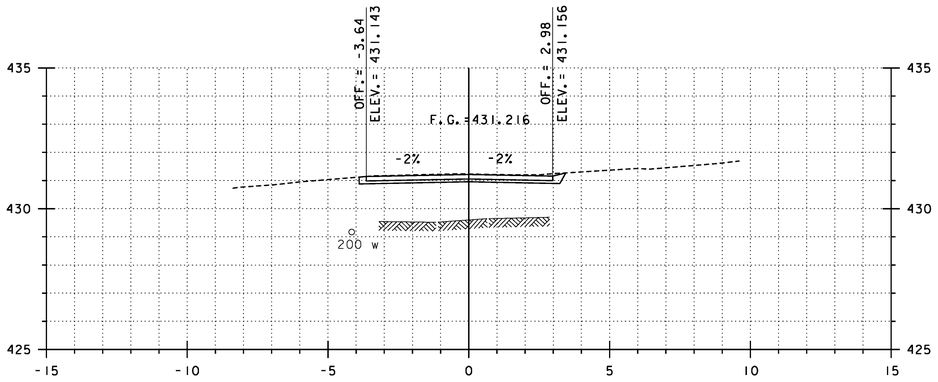

2+240

PARK STREET STA. 2+236.600
BEGIN APPROACH CONSTRUCTION

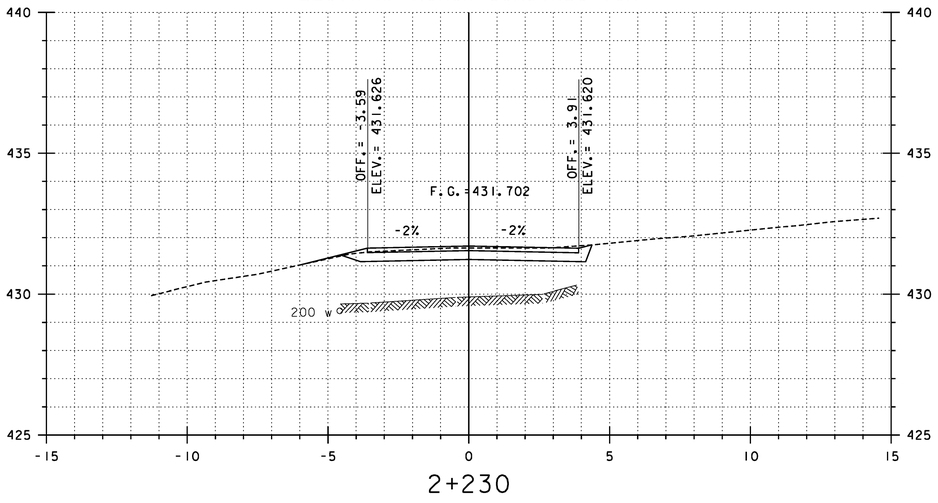

2+230

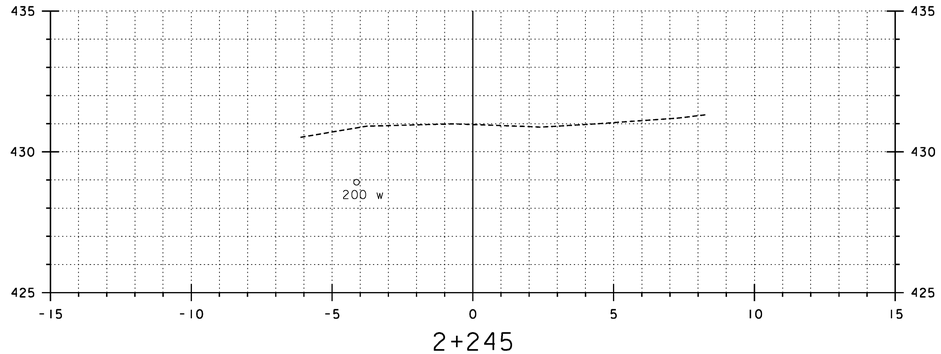

2+245

PARK STREET STA. 2+244.600
END APPROACH CONSTRUCTION
MATCH EXISTING

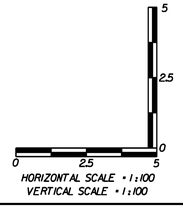

REPLACEMENT SHEETS
ISSUED 02/24/12

STA 2+230 TO 2+245

PROJECT NAME: DANVILLE
PROJECT NUMBER: F EGC 028-3(32)

FILE NAME: ...\PlotFiles\I35 XS-Park_10m.ptf
DESIGN SUPERVISOR: GARY SANTY
DESIGNED BY: STANTEC
PARK STREET CROSS SECTIONS – PSX-7

PLOT DATE: 2/24/2012
DRAWN BY: STANTEC
CHECKED BY: STANTEC
SHEET 273 OF 306

2/24/2012 2:34:23 PM V:\1853\active\053603033.0092\Highway\PlotFiles\I35 XS-Park_10m.ptf

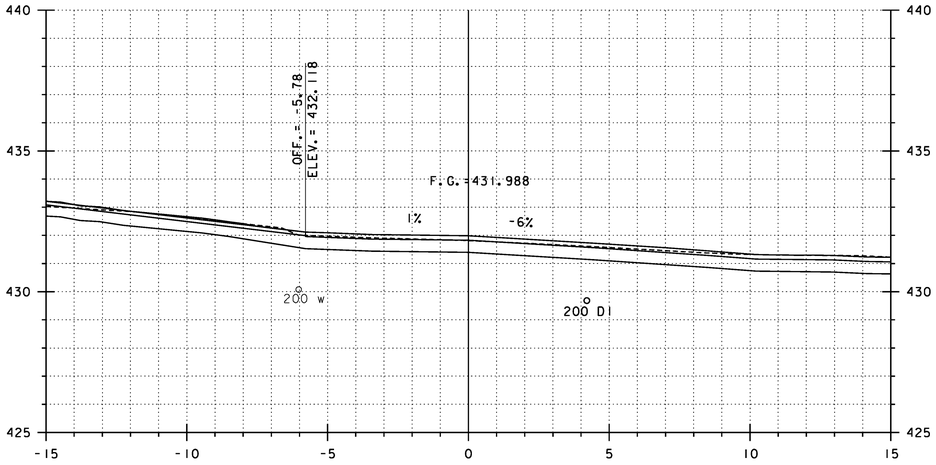

3+010

HILL STREET STA. 3+000.000=
U.S. ROUTE 2 STA. 19+172.500

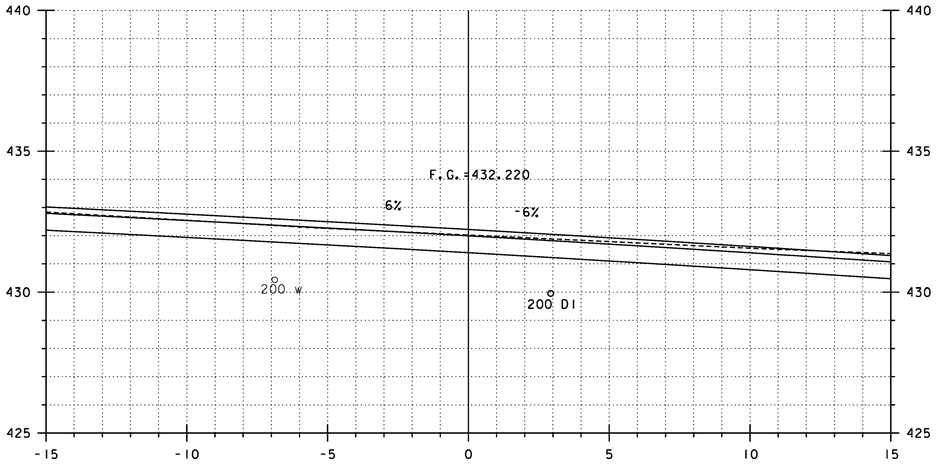

3+000

HILL STREET STA. 3+028.000
END APPROACH CONSTRUCTION
MATCH EXISTING

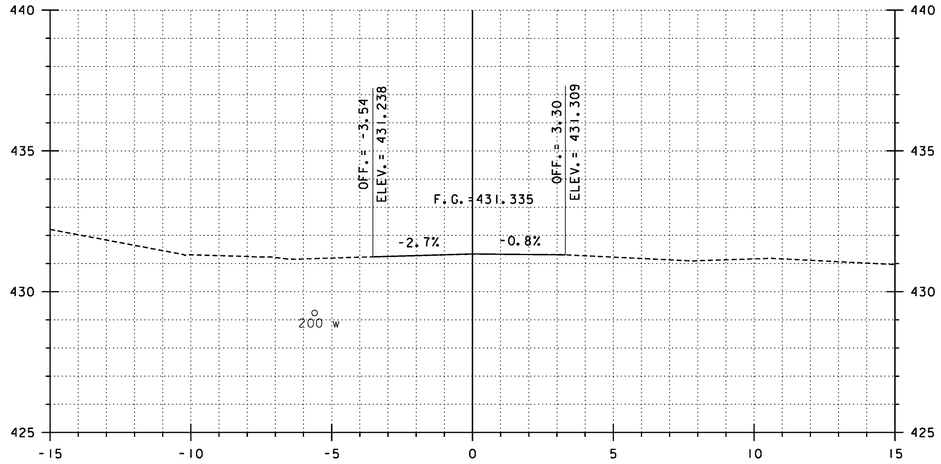

3+028

HILL STREET STA. 3+020.000
BEGIN APPROACH CONSTRUCTION

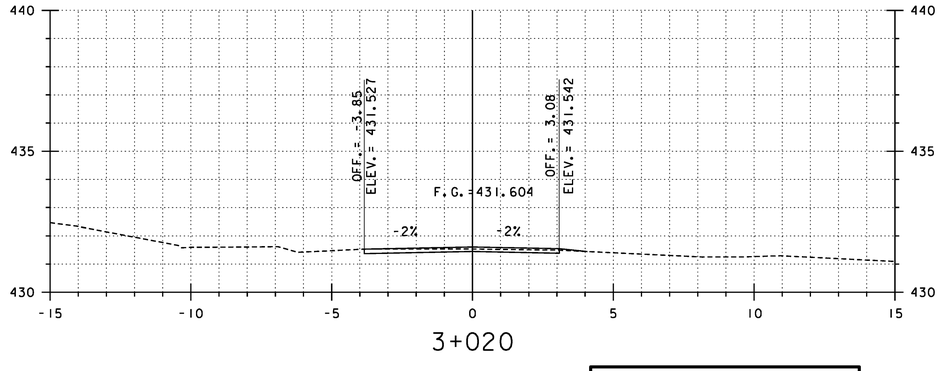

3+020

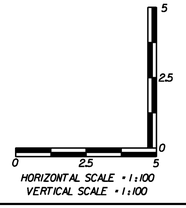

REPLACEMENT SHEETS
ISSUED 02/24/12

STA 3+000 TO 3+028.000

PROJECT NAME: DANVILLE
PROJECT NUMBER: F EGC 028-3(32)

FILE NAME: ...\PlotFiles\136 XS-Hill_10m.ptf
DESIGN SUPERVISOR: GARY SANTY
DESIGNED BY: STANTEC
HILL STREET CROSS SECTIONS - HSX 1

PLOT DATE: 2/24/2012
DRAWN BY: STANTEC
CHECKED BY: STANTEC
SHEET 274 OF 306

2/24/2012 2:34:24 PM N:\1953\active\195300033.0092\Highway\PlotFiles\136 XS-Hill_10m.ptf

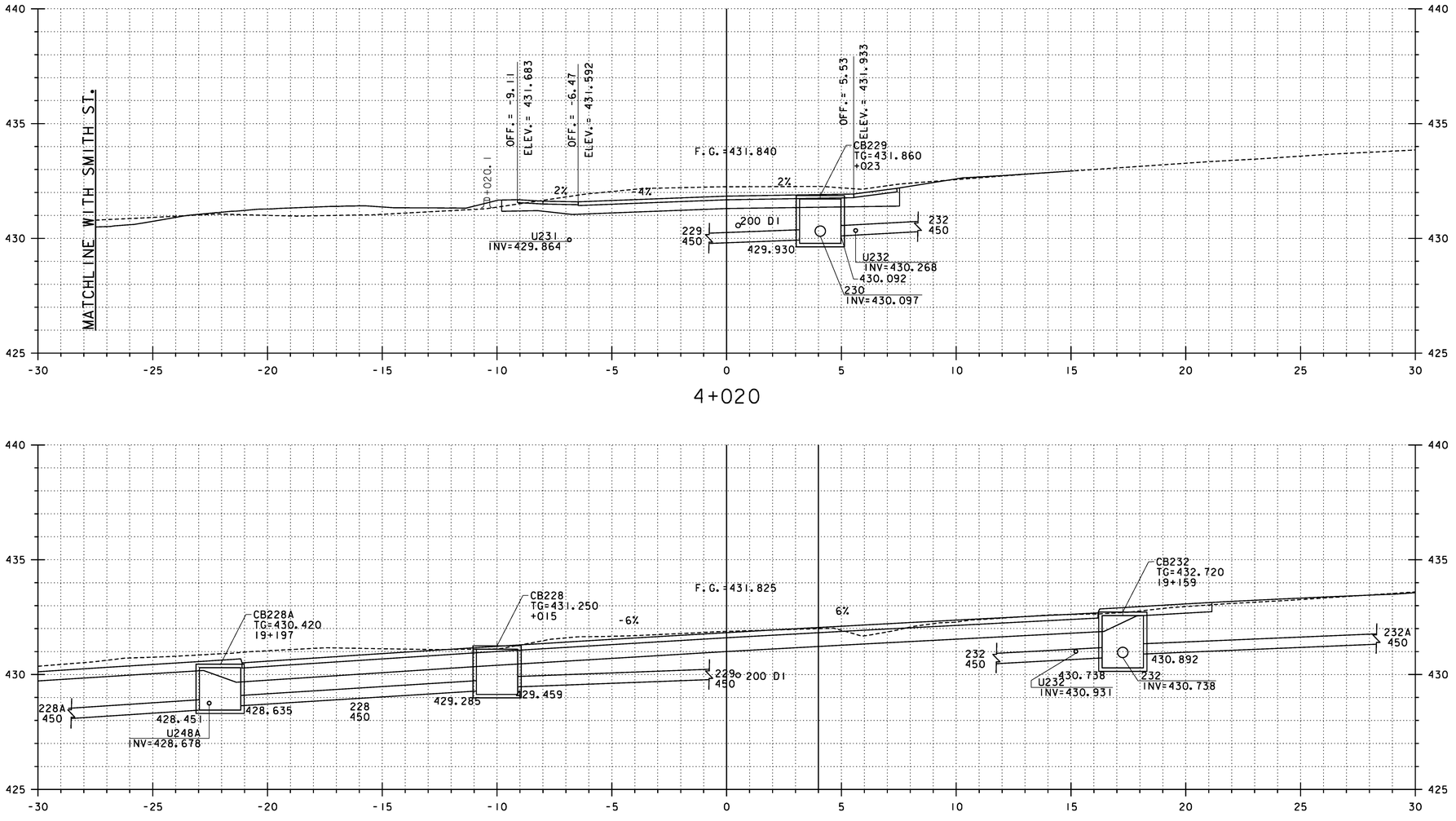

REPLACEMENT SHEETS ISSUED 02/24/12

STA 4+010 TO 4+020

PROJECT NAME: DANVILLE
PROJECT NUMBER: F EGC 028-3(32)

FILE NAME: ...\137 XS-Peacham_10m.ptf
DESIGN SUPERVISOR: GARY SANTY
DESIGNED BY: STANTEC
PEACHAM ROAD CROSS SECTIONS – PRX-1

PLOT DATE: 2/24/2012
DRAWN BY: STANTEC
CHECKED BY: STANTEC
SHEET 275 OF 306

Stantec

2/24/2012 2:34:25 PM V:\0953\active\50530033.0092\Highway\Plotfiles\137 XS-Peacham_10m.ptf

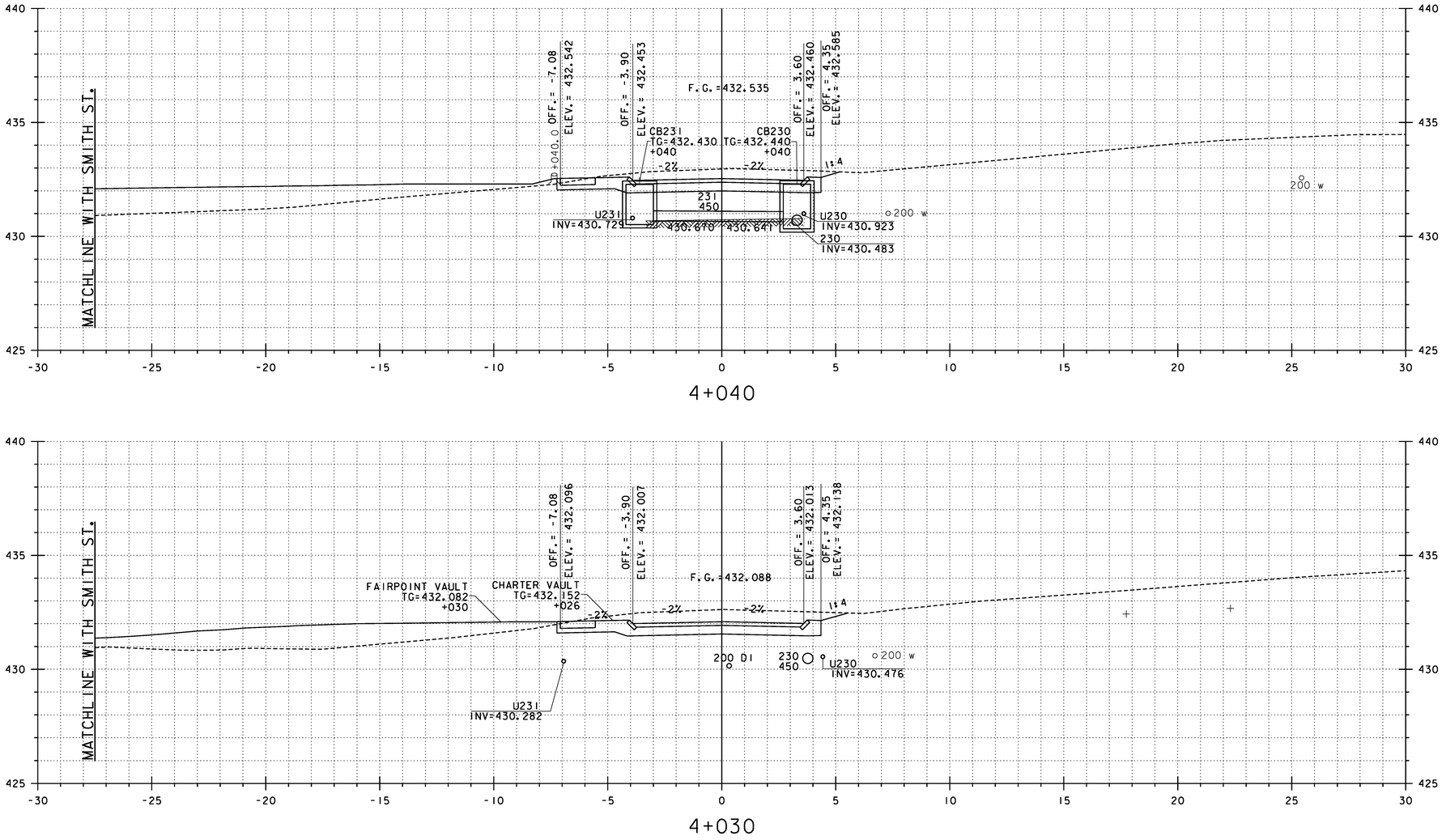

HORIZONTAL SCALE • 1:100
VERTICAL SCALE • 1:100

REPLACEMENT SHEETS ISSUED 02/24/12

STA 4+030 TO 4+040

PROJECT NAME: DANVILLE
PROJECT NUMBER: F EGC 028-3(32)

FILE NAME: ...\137 XS-Peacham_10m.ptf
DESIGN SUPERVISOR: GARY SANTY
DESIGNED BY: STANTEC
PEACHAM ROAD CROSS SECTIONS – PRX-2

PLOT DATE: 2/24/2012
DRAWN BY: STANTEC
CHECKED BY: STANTEC
SHEET 276 OF 306

2/24/2012 2:34:25 PM V:\0953\active\60530033.0092\Highway\ProtFiles\137 XS-Peacham_10m.ptf

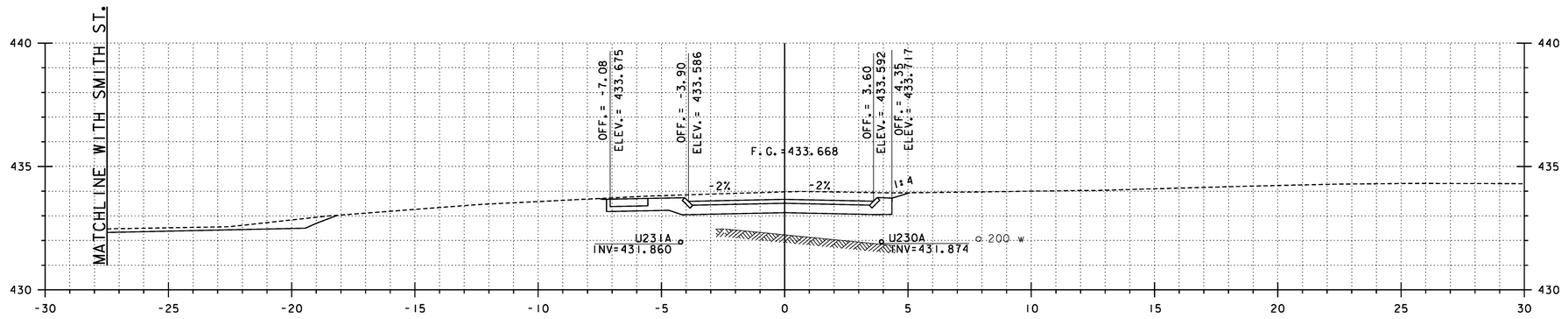

4+070

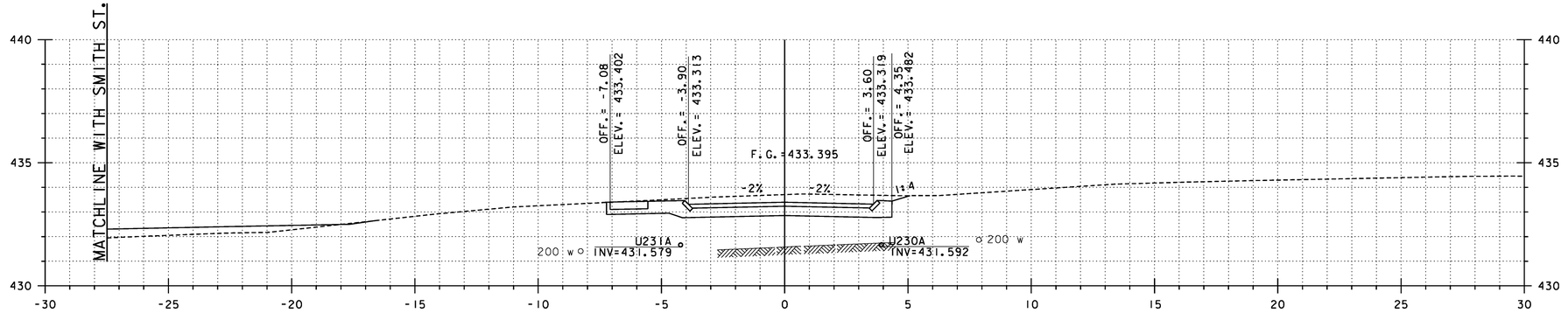

4+060

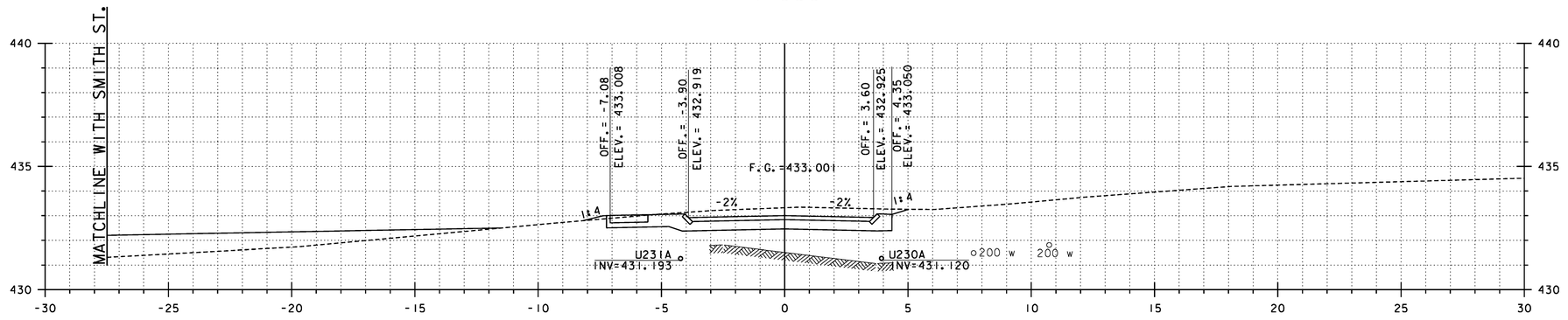

4+050

HORIZONTAL SCALE • 1:100
VERTICAL SCALE • 1:100

REPLACEMENT SHEETS ISSUED 02/24/12

STA 4+050 TO 4+070

PROJECT NAME: DANVILLE
PROJECT NUMBER: F EGC 028-3(32)

FILE NAME: ...\137 XS-Peacham_10m.ptf
DESIGN SUPERVISOR: GARY SANTY
DESIGNED BY: STANTEC
PLOT DATE: 2/24/2012
DRAWN BY: STANTEC
CHECKED BY: STANTEC

PEACHAM ROAD CROSS SECTIONS – PRX-3 SHEET 277 OF 306

2/24/2012 2:38:26 PM V:\0953\active\95300033.0092\Highway\Profiles\137 XS-Peacham_10m.ptf

Metric

PEACHAM ROAD STA. 4+106.333=
PARK STREET STA. 2+145.691

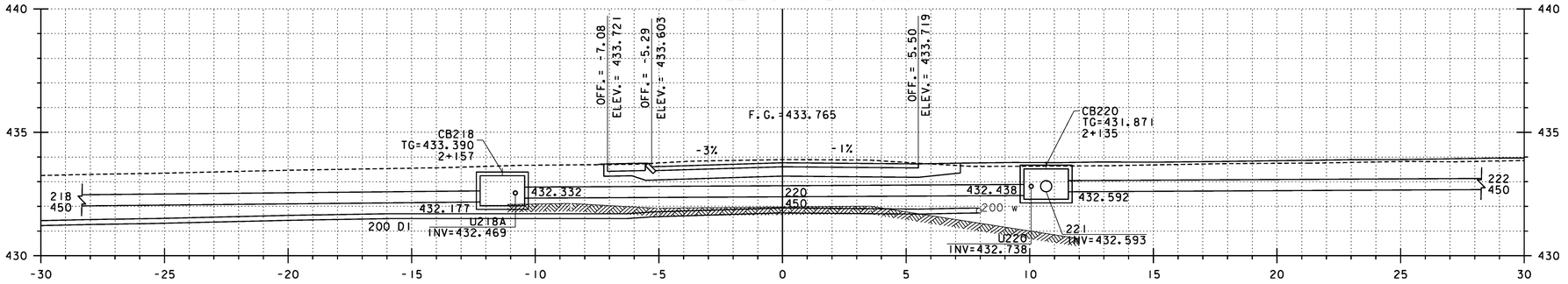

4+100

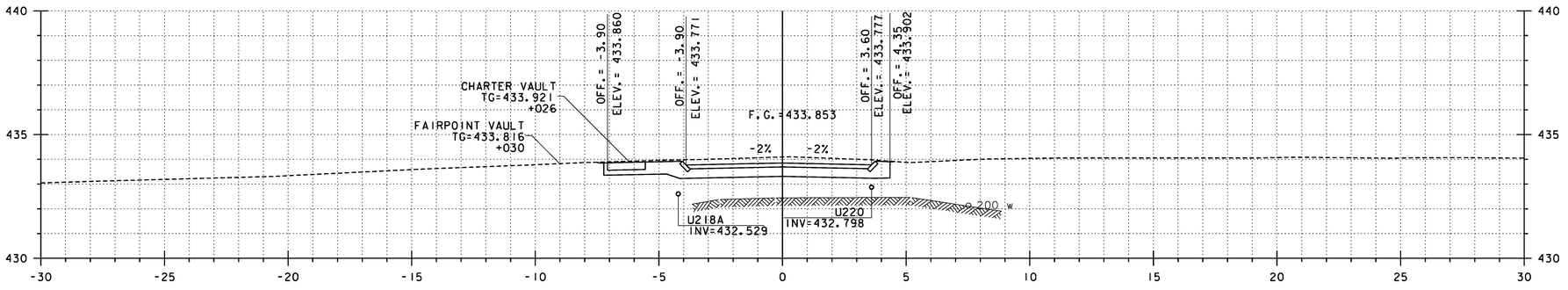

4+090

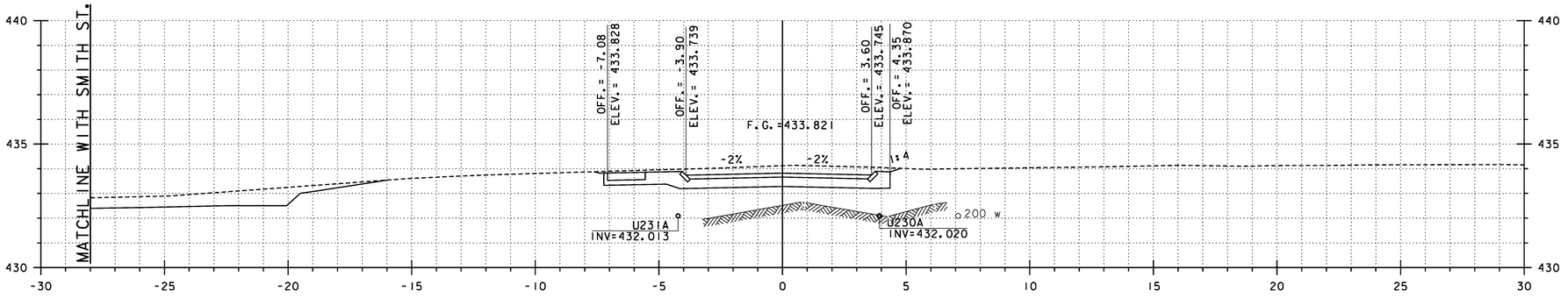

4+080

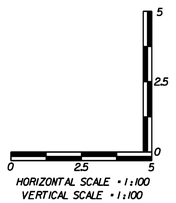

REPLACEMENT SHEETS
ISSUED 02/24/12

STA 4+080 TO 4+106.333

PROJECT NAME: DANVILLE
PROJECT NUMBER: F EGC 028-3(32)

FILE NAME: ...\137 XS-Peacham_10m.ptf
DESIGN SUPERVISOR: GARY SANTY
DESIGNED BY: STANTEC
PEACHAM ROAD CROSS SECTIONS – PRX-4

PLOT DATE: 2/24/2012
DRAWN BY: STANTEC
CHECKED BY: STANTEC
SHEET 278 OF 306

Stantec

2/24/2012 2:39:21 PM V:\1953\active\195310033.0092\Highway\PlotFiles\137 XS-Peacham_10m.ptf

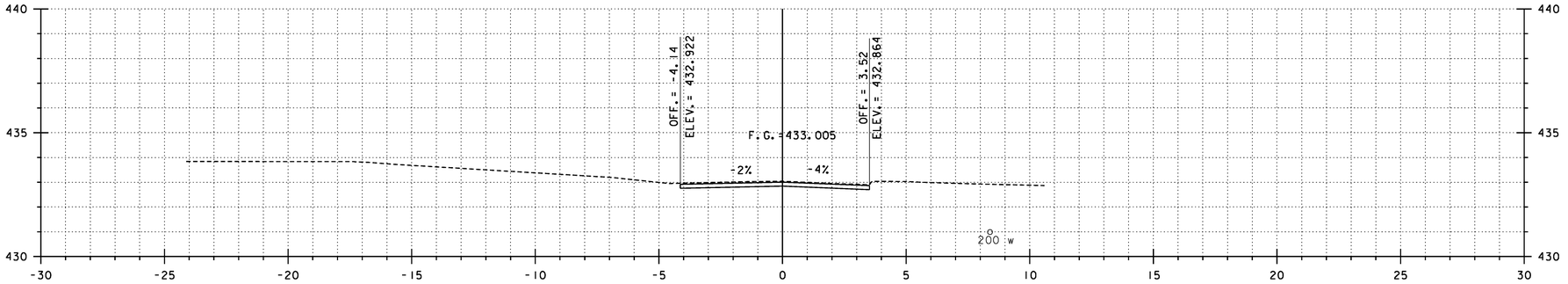

4+130

PEACHAM ROAD STA. 4+123.840
BEGIN APPROACH CONSTRUCTION

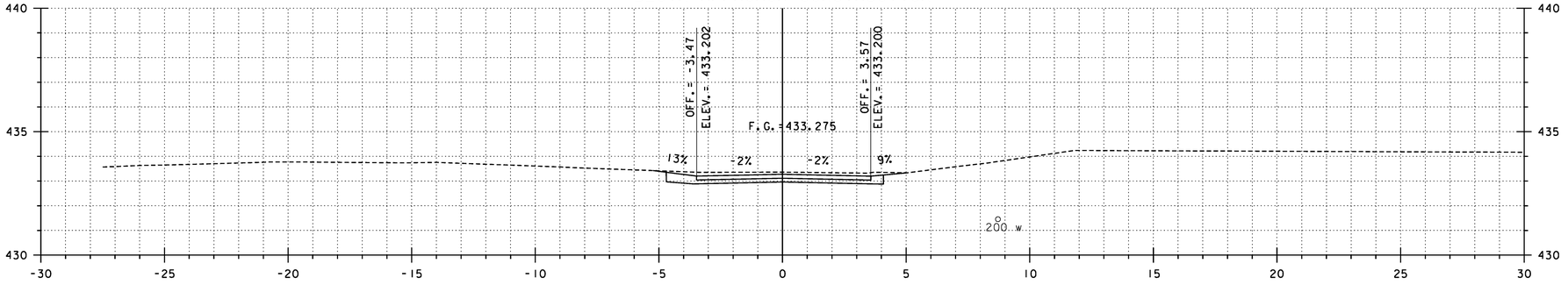

4+120

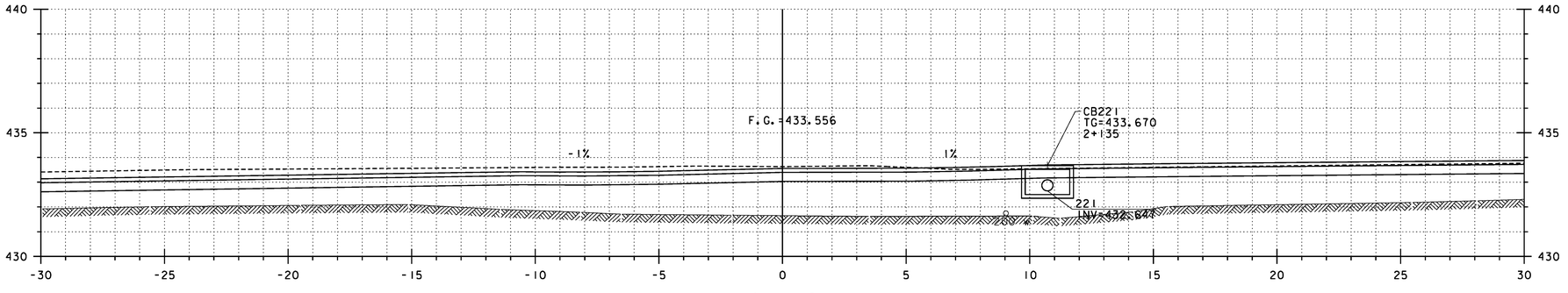

4+110

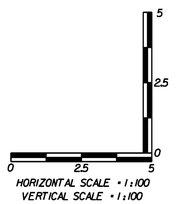

REPLACEMENT SHEETS
ISSUED 02/24/12

STA 4+110 TO 4+130

PROJECT NAME: DANVILLE
PROJECT NUMBER: F EGC 028-3(32)

FILE NAME: ...\137 XS-Peacham_10m.ptf
DESIGN SUPERVISOR: GARY SANTY
DESIGNED BY: STANTEC
PEACHAM ROAD CROSS SECTIONS – PRX-5

PLOT DATE: 2/24/2012
DRAWN BY: STANTEC
CHECKED BY: STANTEC
SHEET 279 OF 306

2/24/2012 2:39:28 PM V:\1953\active\95330033.0092\Highway\PlotFiles\137 XS-Peacham_10m.ptf

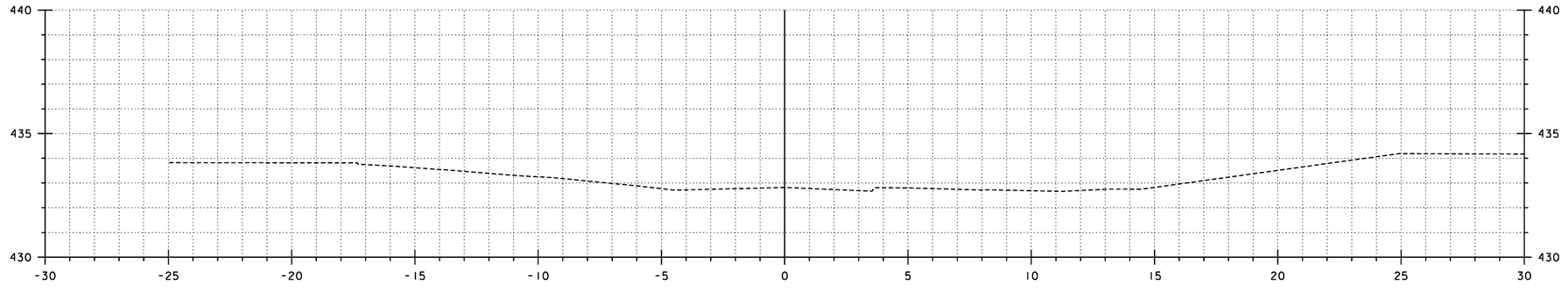

4+132

PEACHAM ROAD STA. 4+131.840
END APPROACH CONSTRUCTION
MATCH EXISTING

HORIZONTAL SCALE • 1:100
VERTICAL SCALE • 1:100

REPLACEMENT SHEETS ISSUED 02/24/12

STA 4+132

PROJECT NAME: DANVILLE
PROJECT NUMBER: F EGC 028-3(32)

FILE NAME: ...\137 XS-Peacham_10m.ptf
DESIGN SUPERVISOR: GARY SANTY
DESIGNED BY: STANTEC
PEACHAM ROAD CROSS SECTIONS – PRX-6

PLOT DATE: 2/24/2012
DRAWN BY: STANTEC
CHECKED BY: STANTEC
SHEET 280 OF 306

2/24/2012 2:36:28 PM V:\0953\active\60530033.092\Highway\Profiles\137 XS-Peacham_10m.ptf

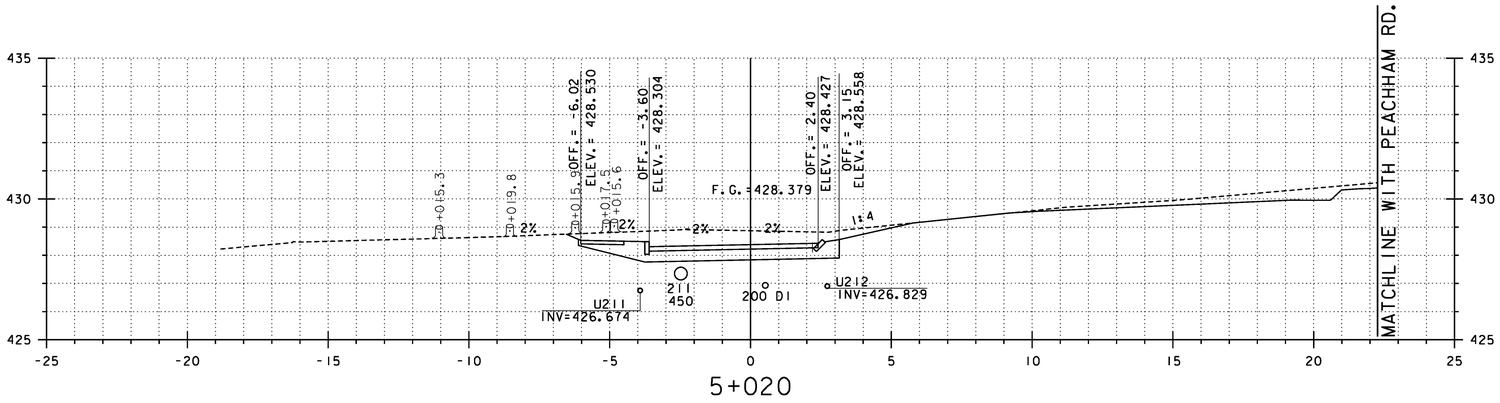

5+020

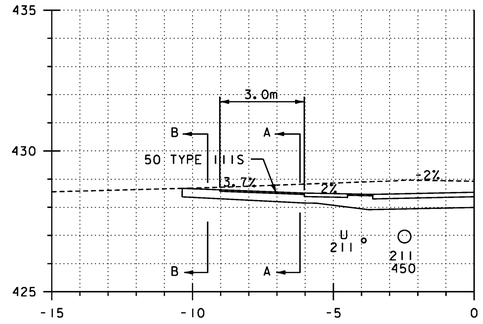

5+024.1
GRAVEL, LT

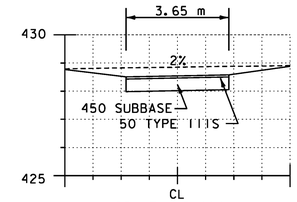

DRIVE @ 5+024.1
SECTION A-A

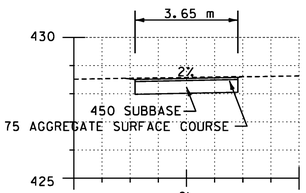

DRIVE @ 5+024.1
SECTION A-A

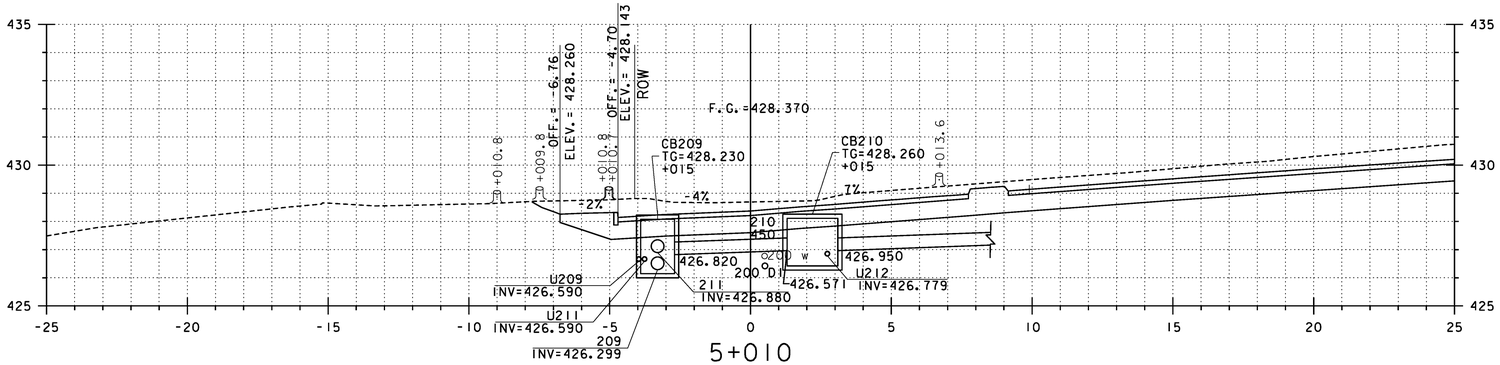

5+010

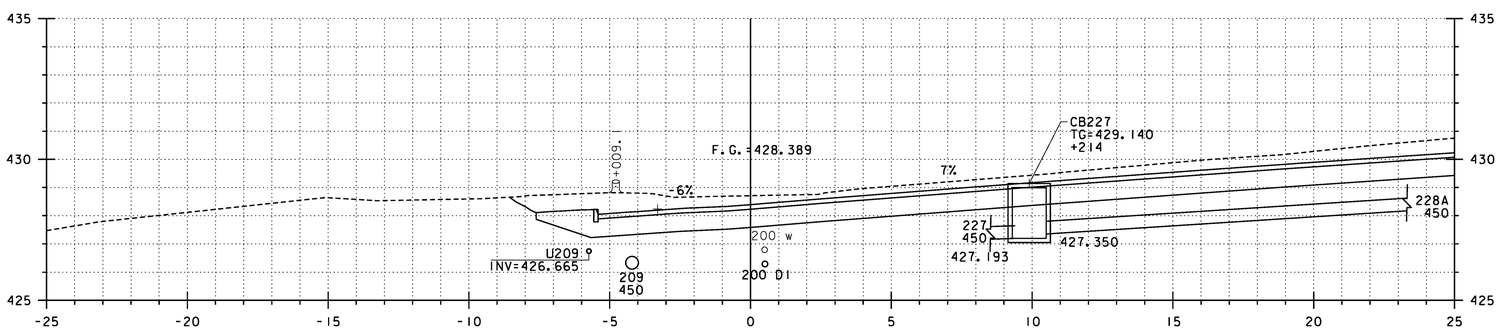

5+009

SMITH STREET STA. 5+000.000=
U.S. ROUTE 2 STA. 19+224.651

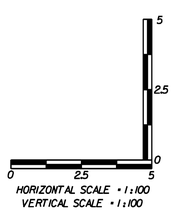

HORIZONTAL SCALE • 1:100
VERTICAL SCALE • 1:100

REPLACEMENT SHEETS ISSUED 02/24/12

STA 5+000.000 TO 5+024.1

PROJECT NAME: DANVILLE
PROJECT NUMBER: F EGC 028-3(32)

FILE NAME: ...\PlotFiles\I38 XS-Smith_I0m.ptf
DESIGN SUPERVISOR: GARY SANTY
DESIGNED BY: STANTEC
SMITH STREET CROSS SECTIONS - SSX-1

PLOT DATE: 2/24/2012
DRAWN BY: STANTEC
CHECKED BY: STANTEC
SHEET 281 OF 306

2/24/2012 2:39:29 PM V:\1953\active\053100033.0092\Highway\PlotFiles\I38 XS-Smith_I0m.ptf

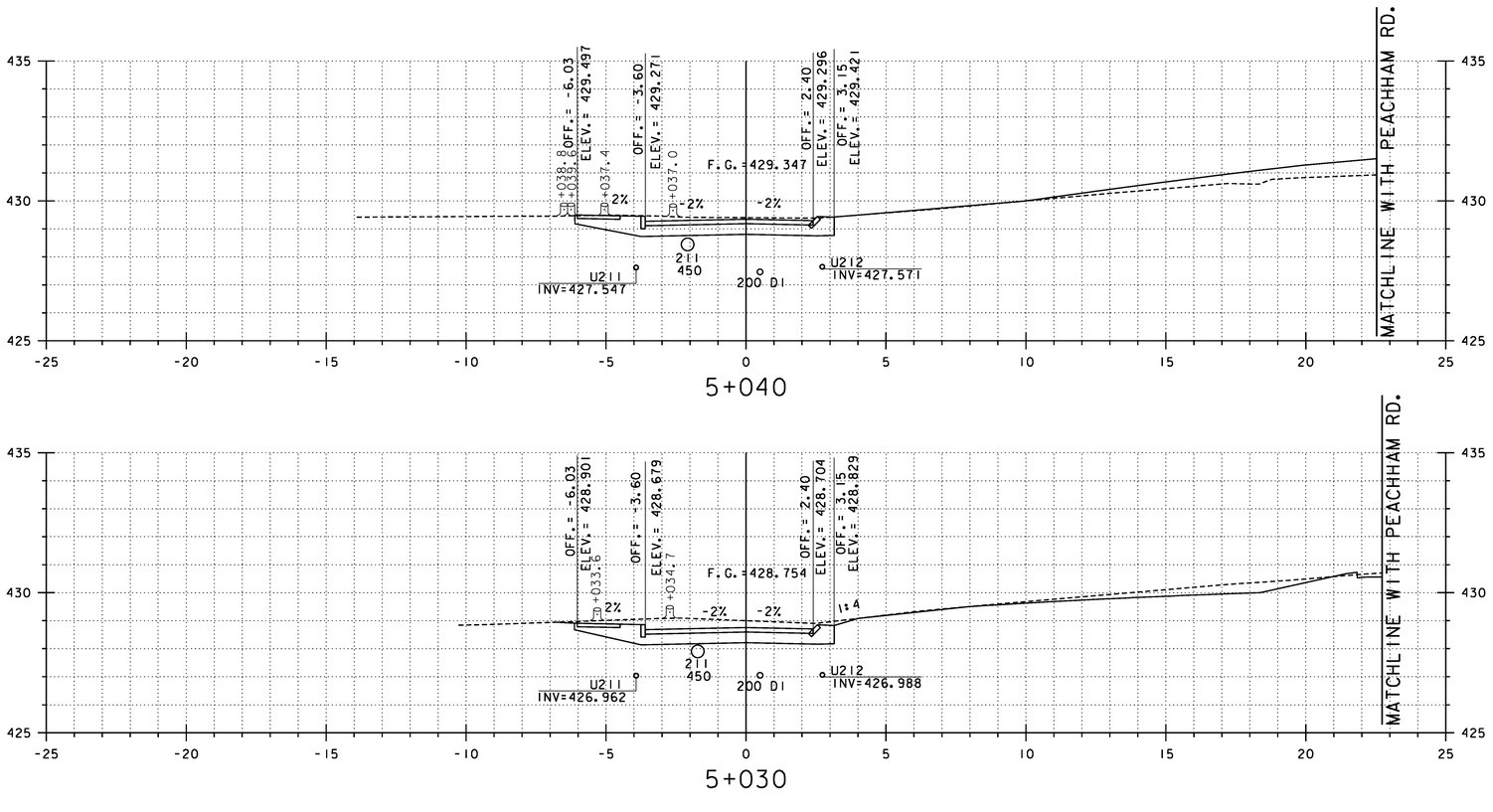

HORIZONTAL SCALE • 1:100
VERTICAL SCALE • 1:100

REPLACEMENT SHEETS ISSUED 02/24/12

STA 5+030 TO 5+040

PROJECT NAME: DANVILLE
PROJECT NUMBER: F EGC 028-3(32)

FILE NAME: ...\PlotFiles\138 XS-Smith_10m.ptf
PLOT DATE: 2/24/2012
DESIGN SUPERVISOR: GARY SANTY
DRAWN BY: STANTEC
DESIGNED BY: STANTEC
CHECKED BY: STANTEC
SMITH STREET CROSS SECTIONS - SSX-2
SHEET 282 OF 306

2/24/2012 2:31:30 PM V:\1853\active\853033.0092\Highway\PlotFiles\138 XS-Smith_10m.ptf

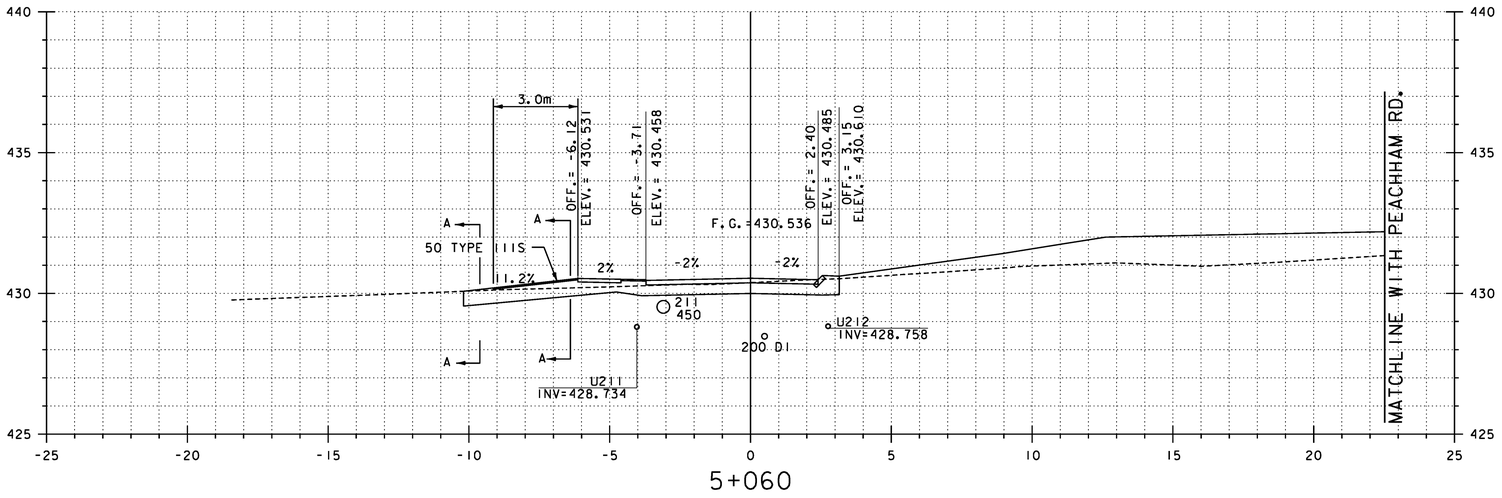

5+060

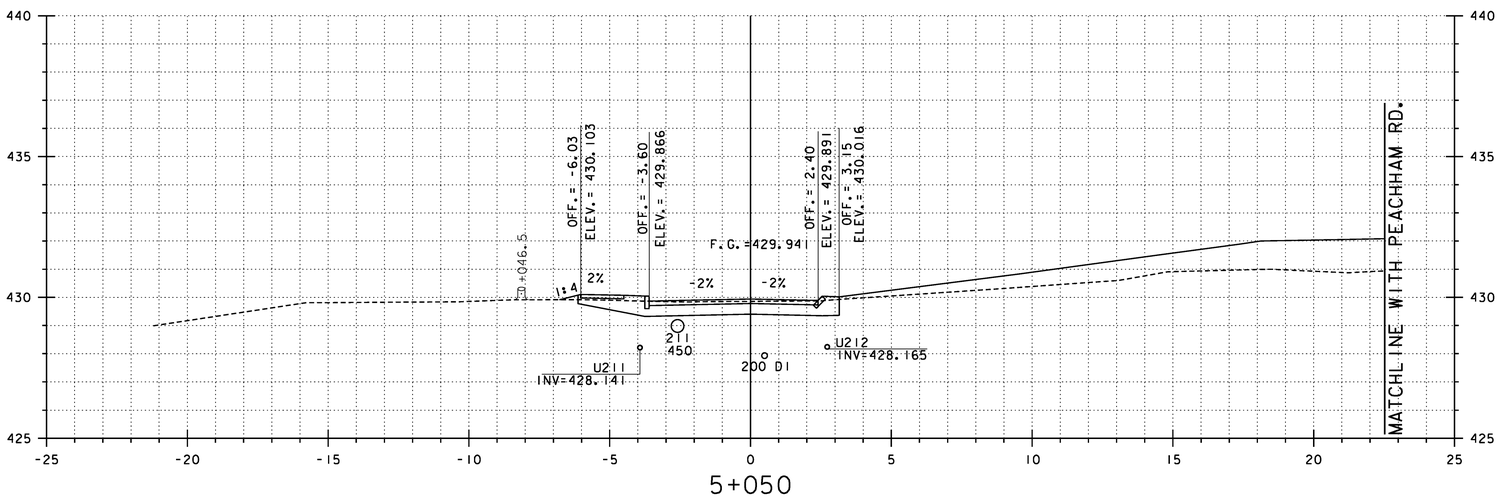

5+050

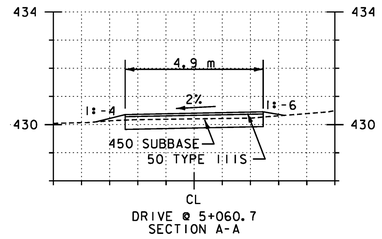

DRIVE @ 5+060.7
SECTION A-A

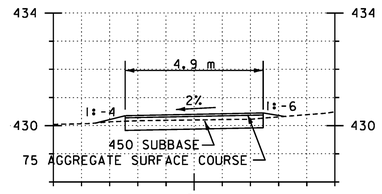

DRIVE @ 5+060.7
SECTION B-B

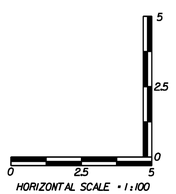

HORIZONTAL SCALE = 1:100
VERTICAL SCALE = 1:100

REPLACEMENT SHEETS ISSUED 02/24/12

STA 5+050 TO 5+060

PROJECT NAME: DANVILLE
PROJECT NUMBER: F EGC 028-3(32)

FILE NAME: ...\PlotFiles\138 XS-Smith_10m.ptf
DESIGN SUPERVISOR: GARY SANTY
DESIGNED BY: STANTEC
SMITH STREET CROSS SECTIONS – SSX–3

PLOT DATE: 2/24/2012
DRAWN BY: STANTEC
CHECKED BY: STANTEC
SHEET 283 OF 306

2/24/2012 2:38:30 PM N:\9530\active\95300033.0092\Highway\PlotFiles\138 XS-Smith_10m.ptf

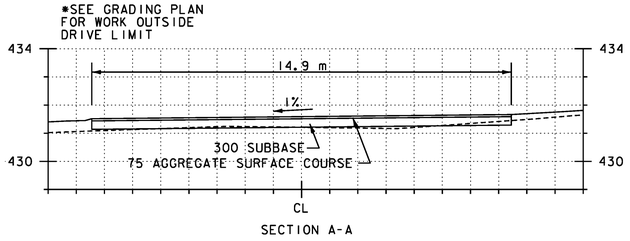

SECTION A-A

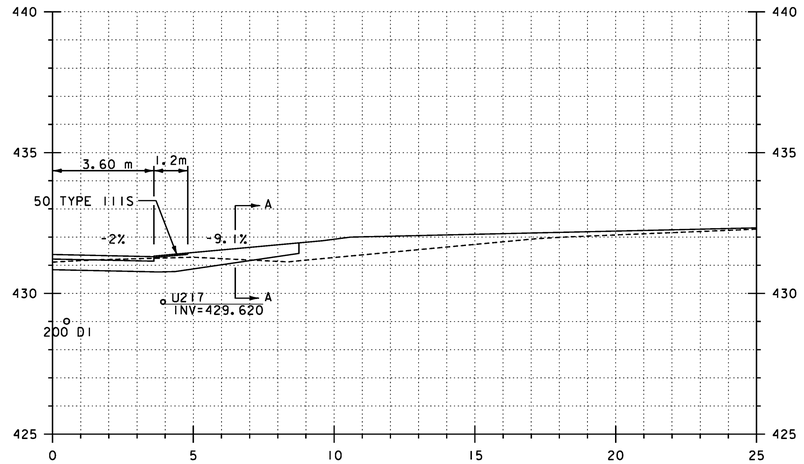

5+074.2
GRAVEL , RT

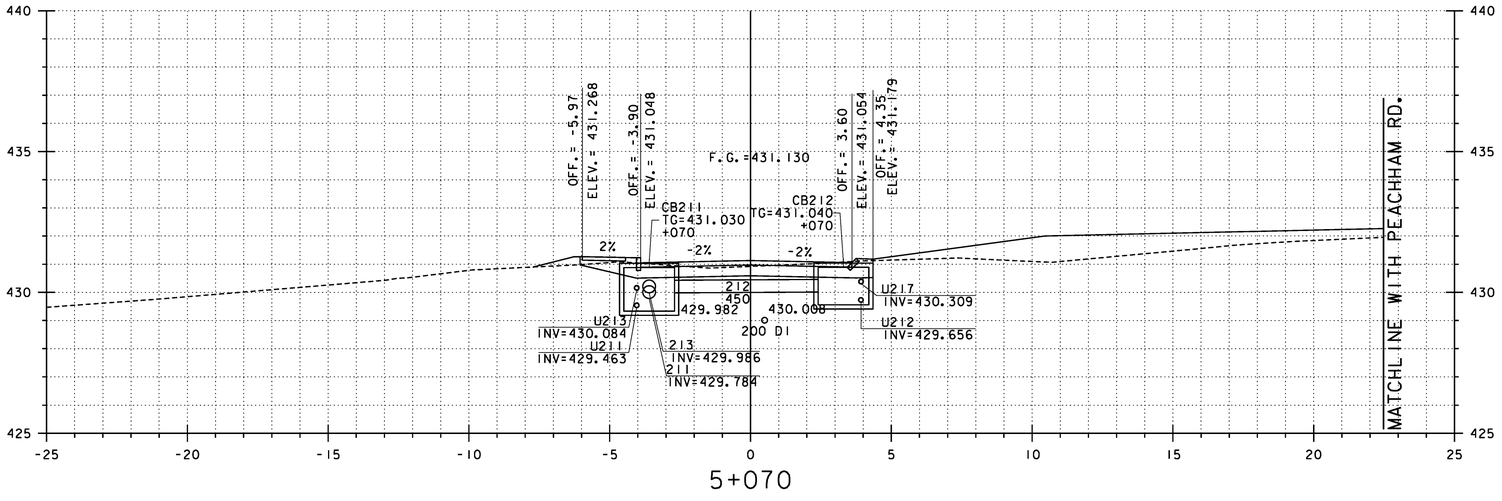

5+070

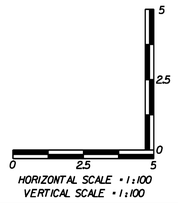

HORIZONTAL SCALE • 1:100
VERTICAL SCALE • 1:100

REPLACEMENT SHEETS ISSUED 02/24/12

STA 5+070 TO 5+074.2

PROJECT NAME: DANVILLE
PROJECT NUMBER: F EGC 028-3(32)

FILE NAME: ...\PlotFiles\138 XS-Smith_10m.ptf
DESIGN SUPERVISOR: GARY SANTY
DESIGNED BY: STANTEC
SMITH STREET CROSS SECTIONS – SSX–4

PLOT DATE: 2/24/2012
DRAWN BY: STANTEC
CHECKED BY: STANTEC
SHEET 284 OF 306

Stantec

2/24/2012 2:36:31PM V:\0953\active\95300033.0092\Highway\PlotFiles\138 XS-Smith_10m.ptf

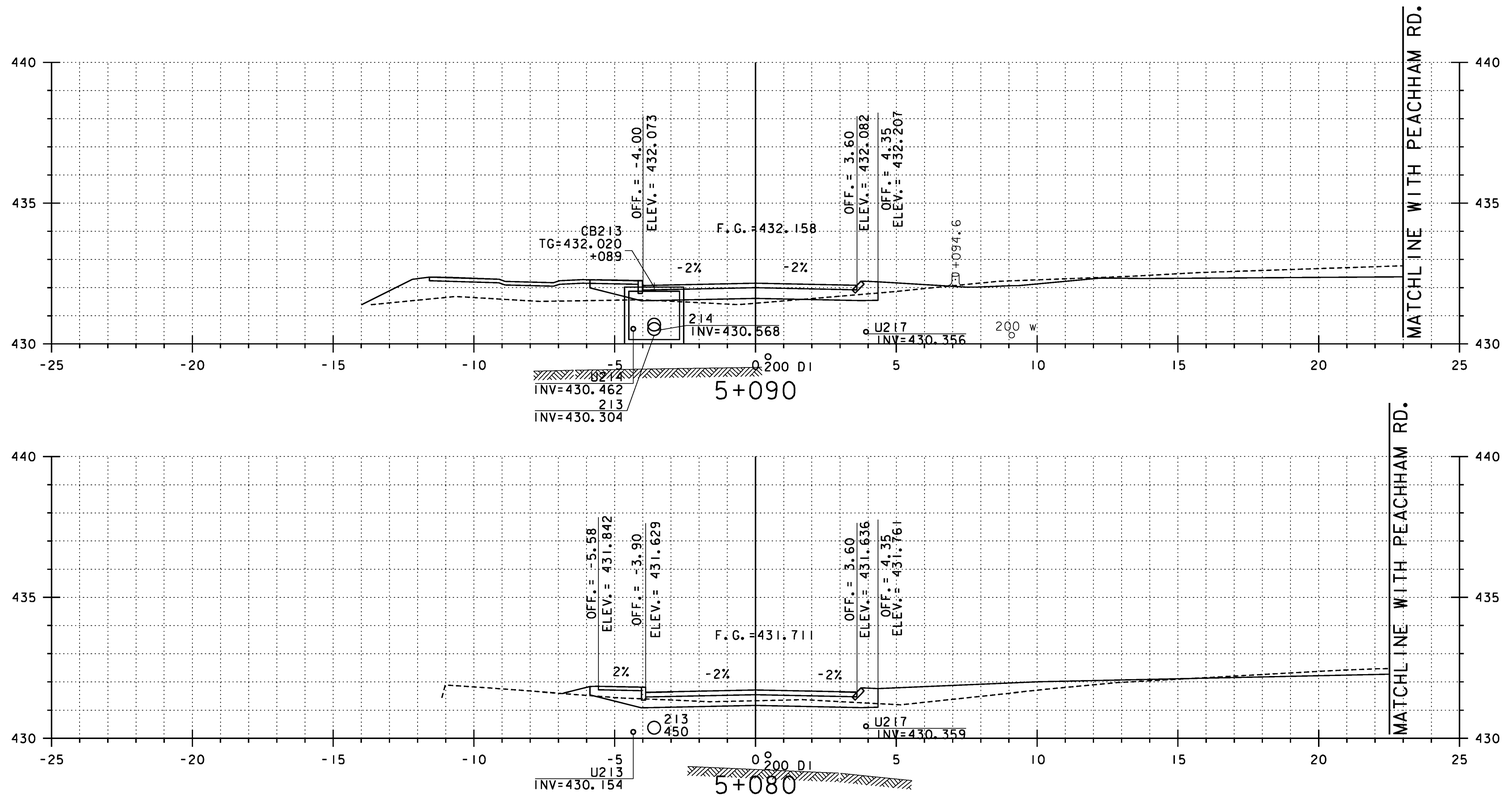

HORIZONTAL SCALE • 1:100
VERTICAL SCALE • 1:100

REPLACEMENT SHEETS ISSUED 02/24/12

STA 5+080 TO 5+090

PROJECT NAME: DANVILLE
PROJECT NUMBER: F EGC 028-3(32)

FILE NAME: ...\PlotFiles\138 XS-Smith_10m.ptf
DESIGN SUPERVISOR: GARY SANTY
DESIGNED BY: STANTEC
SMITH STREET CROSS SECTIONS – SSX–5

PLOT DATE: 2/24/2012
DRAWN BY: STANTEC
CHECKED BY: STANTEC
SHEET 285 OF 306

2/24/2012 2:34:32 PM V:\0953\active\50530033.002\Highway\PlotFiles\138 XS-Smith_10m.ptf

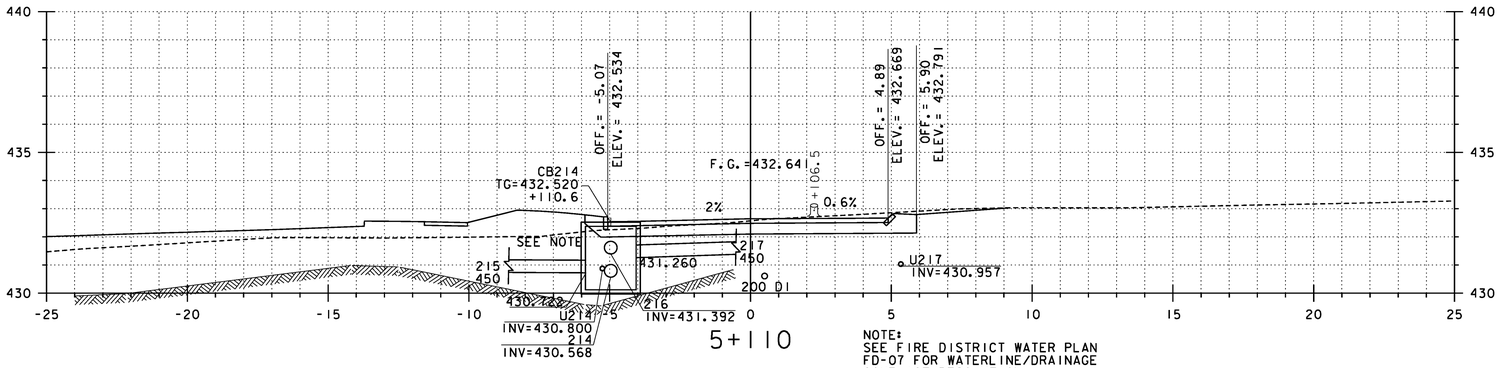

5+110

NOTE:
SEE FIRE DISTRICT WATER PLAN
FD-07 FOR WATERLINE/DRAINAGE
CONFLICT RESOLUTION.

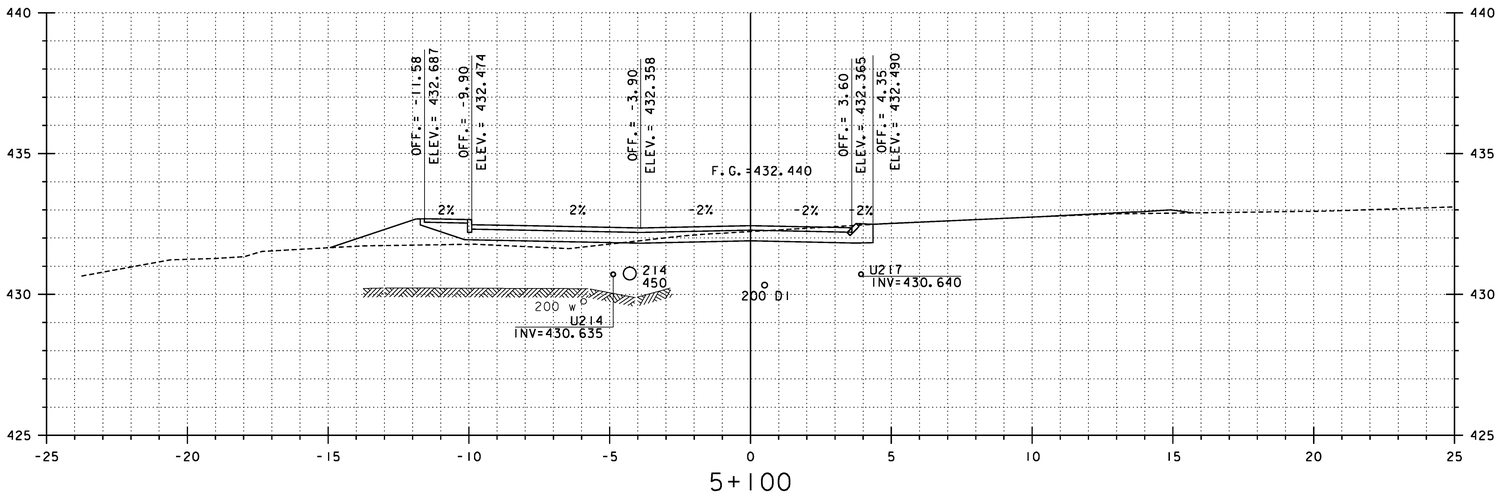

5+100

HORIZONTAL SCALE • 1:100
VERTICAL SCALE • 1:100

REPLACEMENT SHEETS ISSUED 02/24/12

STA 5+100 TO 5+110

PROJECT NAME: DANVILLE
PROJECT NUMBER: F EGC 028-3(32)

FILE NAME: ...\PlotFiles\138 XS-Smith_10m.ptf
DESIGN SUPERVISOR: GARY SANTY
DESIGNED BY: STANTEC
SMITH STREET CROSS SECTIONS – SSX–6

PLOT DATE: 2/24/2012
DRAWN BY: STANTEC
CHECKED BY: STANTEC
SHEET 286 OF 306

2/24/2012 2:43:32 PM V:\1953\active\195300033.0092\Highways\PlotFiles\138 XS-Smith_10m.ptf

Metric

SMITH STREET STA. 5+115.963=
PARK STREET STA. 2+200.430

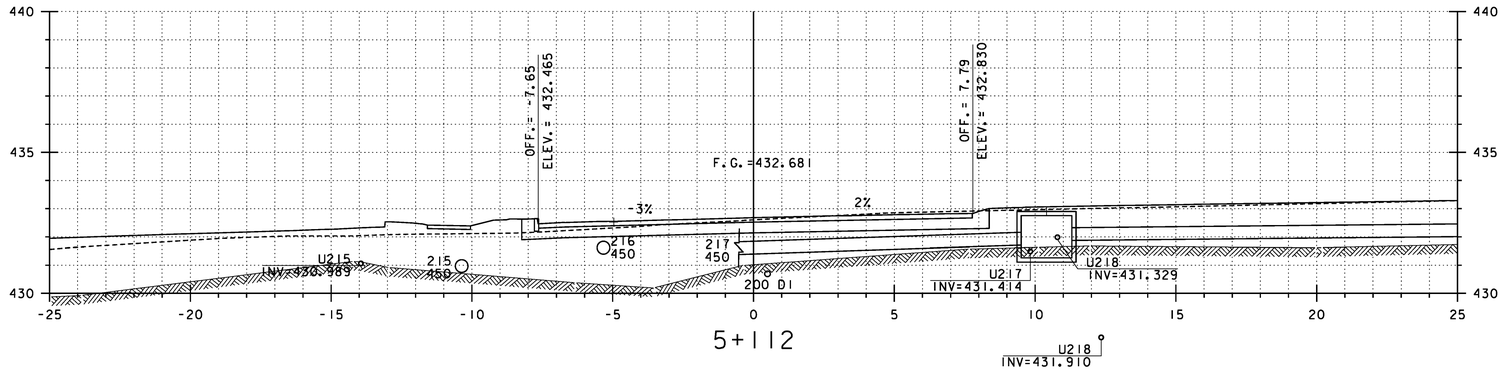

HORIZONTAL SCALE • 1:100
VERTICAL SCALE • 1:100

REPLACEMENT SHEETS ISSUED 02/24/12

STA 5+112 TO 5+115.963

PROJECT NAME: DANVILLE
PROJECT NUMBER: F EGC 028-3(32)

FILE NAME: ...\PlotFiles\138 XS-Smith_10m.ptf
DESIGN SUPERVISOR: GARY SANTY
DESIGNED BY: STANTEC
SMITH STREET CROSS SECTIONS – SSX–7

PLOT DATE: 2/24/2012
DRAWN BY: STANTEC
CHECKED BY: STANTEC
SHEET 287 OF 306

Stantec

2/24/2012 2:36:33 PM V:\0953\active\60530033.092\Highway\PlotFiles\138 XS-Smith_10m.ptf

HIGHLAND AVENUE STA. 6+019.500
BEGIN APPROACH CONSTRUCTION

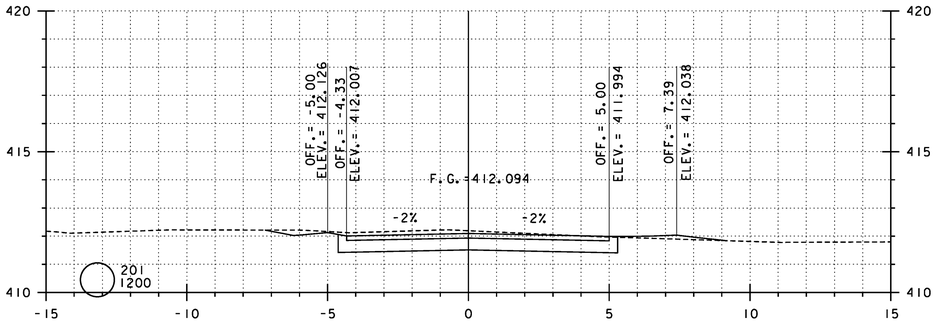

6+010

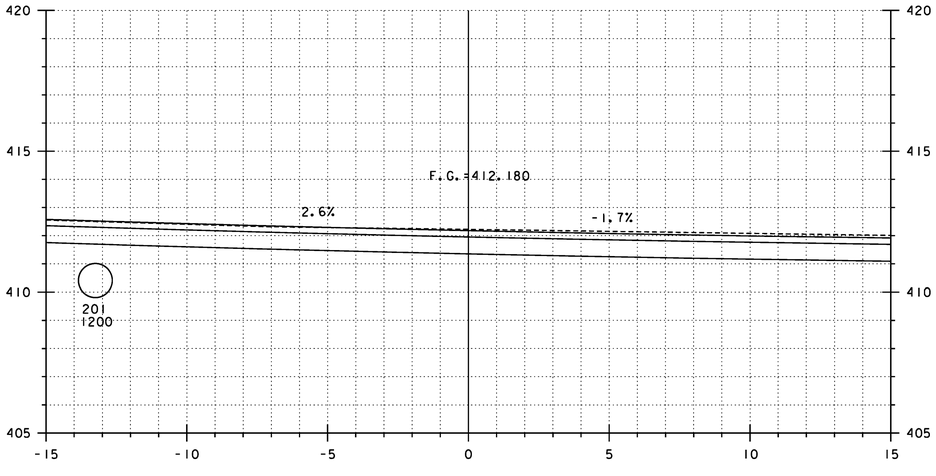

6+000

HIGHLAND AVENUE STA. 6+000.000=
U.S. ROUTE 2 STA. 19+434.495,
MOUNTAIN VIEW DRIVE STA. 6+999.932

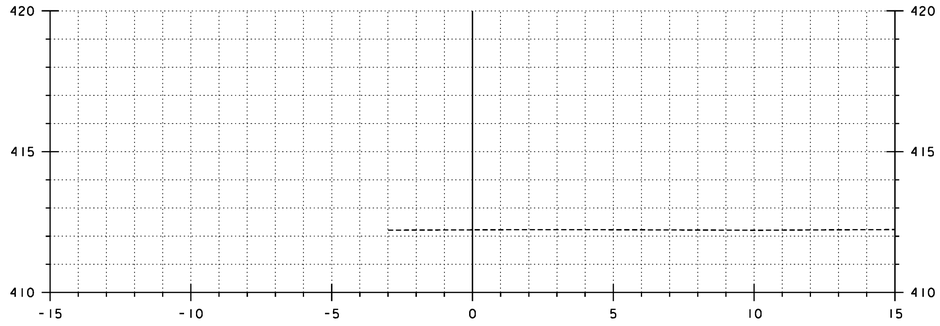

6+028

HIGHLAND AVENUE STA. 6+027.500
END APPROACH CONSTRUCTION
MATCH EXISTING

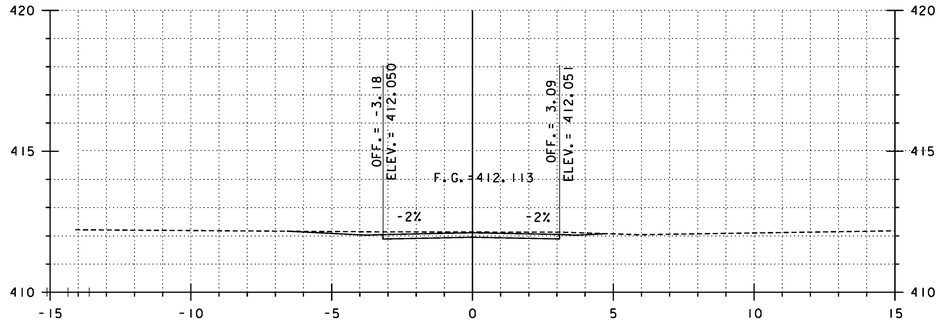

6+020

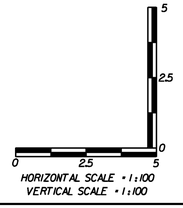

REPLACEMENT SHEETS
ISSUED 02/24/12

STA 6+000.000 TO 6+028

PROJECT NAME: DANVILLE
PROJECT NUMBER: F EGC 028-3(32)

FILE NAME: ...\139 XS-Highland_10m.ptf
DESIGN SUPERVISOR: GARY SANTY
DESIGNED BY: STANTEC
HIGHLAND AVE CROSS SECTIONS - HAX-1

PLOT DATE: 2/24/2012
DRAWN BY: STANTEC
CHECKED BY: STANTEC
SHEET 288 OF 306

Stantec

2/24/2012 2:34:33 PM N:\1953\active\195300033.0092\Highway\PlotFiles\139 XS-Highland_10m.ptf

MOUNTAIN VIEW DRIVE STA. 7+019.500
BEGIN APPROACH CONSTRUCTION

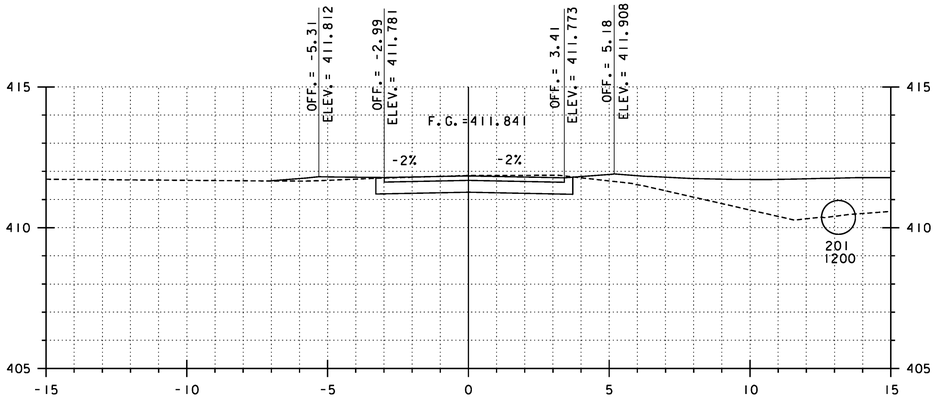

7+010

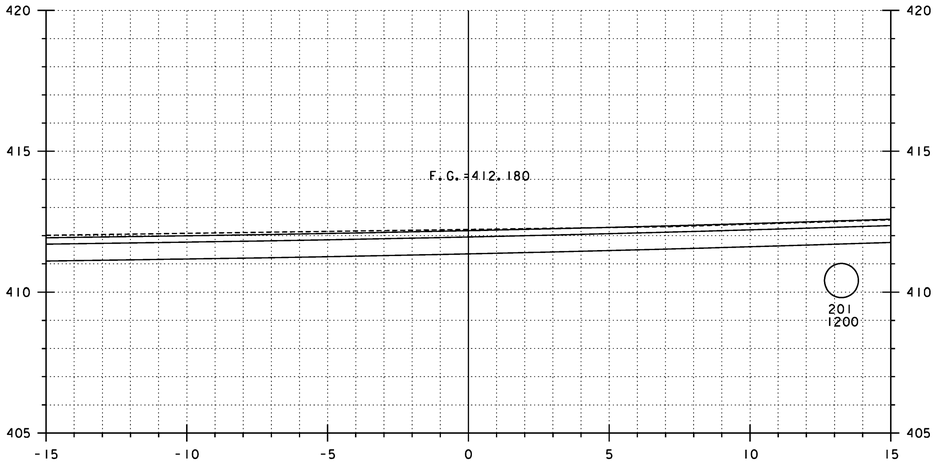

7+000

MOUNTAIN VIEW DRIVE STA. 6+999.932=
U.S. ROUTE 2 STA. 19+434.495,
HIGHLAND AVENUE STA. 6+000.000

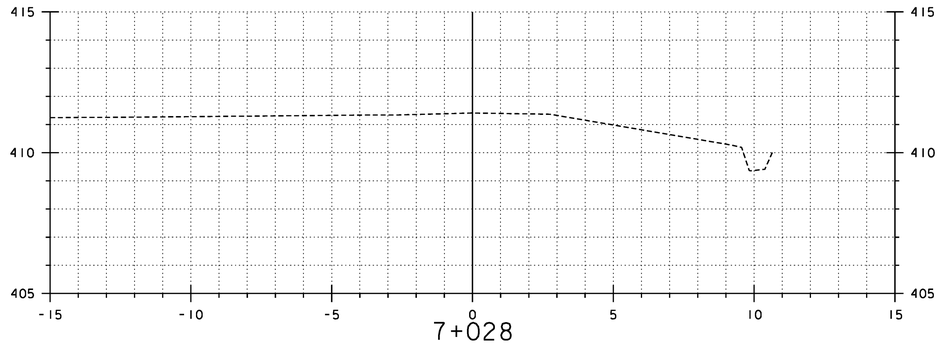

7+028

MOUNTAIN VIEW DRIVE STA. 7+027.500
END APPROACH CONSTRUCTION
MATCH EXISTING

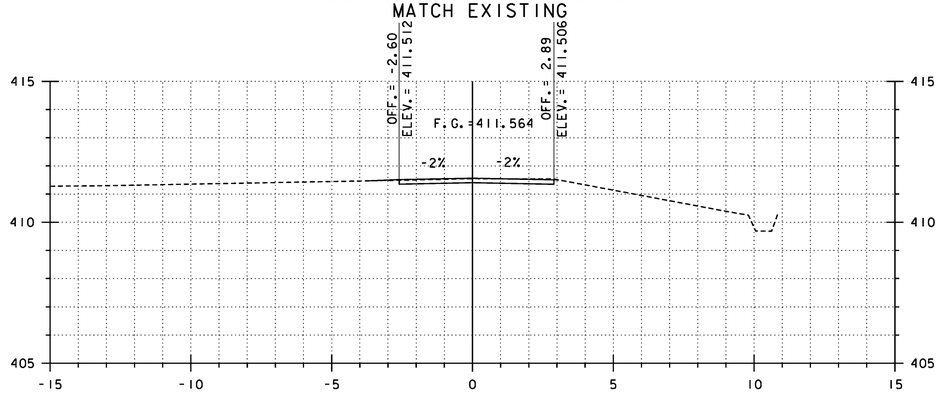

7+020

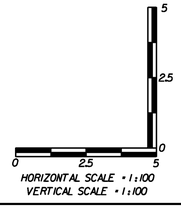

REPLACEMENT SHEETS
ISSUED 02/24/12

STA 7+000.000 TO 7+028

PROJECT NAME: DANVILLE
PROJECT NUMBER: F EGC 028-3(32)

FILE NAME: ...\140 XS-MountainView_10m.ptf
DESIGN SUPERVISOR: GARY SANTY
DESIGNED BY: STANTEC
PLOT DATE: 2/24/2012
DRAWN BY: STANTEC
CHECKED BY: STANTEC

MOUNTAIN VIEW CROSS SECTIONS – MVX-5

2/24/2012 2:31:34 PM V:\1953\active\195300033.0092\Highway\PlotFiles\140 XS-MountainView_10m.ptf

INDEX OF SHEETS

SHEET NO.	DESCRIPTION
FD-1 - FD-2	GENERAL NOTES
FD-3 - FD-12	WATER PLANS AND PROFILES
FD-13 - FD-16	WATER DETAILS
FD-17	SOIL BORINGS

CIVIL GENERAL LEGEND

- EXISTING SANITARY SEWER
- EXISTING STORM DRAIN
- EXISTING WATER MAIN
- EXISTING WOODEN FENCE
- EXISTING TREE/SHRUB LINE
- EXISTING HYDRANT
- EXISTING IRON PIN
- EXISTING SEWER MANHOLE (SMH)
- EXISTING SINGLE POLE SIGN
- EXISTING STUMP
- EXISTING CONIFEROUS TREE
- EXISTING DECIDUOUS TREE
- EXISTING UTILITY POLE
- EXISTING GATE VALVE
- EXISTING SURVEY POINT
- EXISTING CATCH BASIN (SQUARE)

- PROPOSED HYDRANT
- PROPOSED GATE VALVE
- PROPOSED MANUAL AIR RELEASE
- MJ — MECHANICAL JOINT
- RG — RETAINER GLAND
- B1 — TEST BORING
- PROPOSED WATER MAIN

LOCAL VALVE OPERATIONS

1. PROPOSED GATE VALVES OPEN LEFT OR COUNTERCLOCKWISE.
2. PROPOSED CURB STOPS OPEN LEFT OR COUNTERCLOCKWISE.

WATER AND SEWER SEPARATION

1. PARALLEL INSTALLATION: MAINTAIN 1.52M MINIMUM LATERAL DISTANCE BETWEEN STORM DRAIN AND WATERLINES. MAINTAIN 3.05M MINIMUM LATERAL DISTANCE BETWEEN SEWER AND WATER LINES. THESE DISTANCES SHALL BE MEASURED EDGE TO EDGE. IN CASES WHERE IT IS NOT PRACTICAL TO MAINTAIN THESE SEPARATIONS, THE REVIEWING AUTHORITY MAY ALLOW DEVIATION ON A CASE BY CASE BASIS.
2. WATER MAIN CROSSING SEWERS SHALL BE LAID TO PROVIDE A MINIMUM VERTICAL DISTANCE OF 450MM BETWEEN OUTSIDE OF THE WATER MAIN AND THE OUTSIDE OF THE SEWER. THIS SHALL BE THE CASE WHERE THE WATER MAIN IS EITHER ABOVE OR BELOW THE SEWER. IF THE SEWER MAIN IS OVER THE WATER MAIN, THE FIRST SEWER PIPE JOINTS ON EACH SIDE OF THE WATER MAIN MUST BE CONCRETE ENCASED. SPECIAL STRUCTURAL SUPPORT FOR THE WATER AND SEWER PIPES MAY BE REQUIRED.
3. IF IT IS IMPOSSIBLE TO OBTAIN PROPER HORIZONTAL AND VERTICAL SEPARATION AS DESCRIBED ABOVE, BOTH WATER MAIN AND SEWER MUST BE CONSTRUCTED OF PRESSURE TYPE PIPE AND BE PRESSURE TESTED TO 200 PSI TO ASSURE WATER TIGHTNESS BEFORE BACKFILLING. REFER TO WATER/SEWER CROSSING DETAIL 2.

NDOT Metric

GENERAL NOTES

1. THE CONTRACTOR SHALL PERFORM EXPLORATORY EXCAVATION TO LOCATE THE EXISTING WATER, SEWER, STORM DRAIN SYSTEMS, AND SERVICES, PRIOR TO INSTALLATION OF ANY SEGMENT OF NEW WATER MAIN. EXPLORATORY EXCAVATION IS REQUIRED TO LOCATE UNDERGROUND UTILITIES. CONTRACTOR SHALL USE EXTREME CAUTION TO PREVENT DAMAGE TO EXISTING UTILITIES.
2. THE LOCATIONS OF PIPES, DUCTS, CONDUITS, AND OTHER UNDERGROUND STRUCTURES SHOWN ON THESE PLANS ARE NOT WARRANTED TO BE EXACT NOR IS IT WARRANTED THAT ALL UNDERGROUND STRUCTURES ARE SHOWN.
3. ALL WORK TO BE DONE SHALL BE WITHIN THE PUBLIC RIGHT OF WAY OR EASEMENT.
4. ALTHOUGH NOT SHOWN, EXISTING WATER SERVICES SHALL BE REPAIRED OR RELOCATED AS NECESSARY IN ORDER TO MAINTAIN SERVICE. THE DANVILLE FIRE DISTRICT #1 WILL ASSIST IN THE LOCATION AND MARKING OF THESE SERVICES, HOWEVER, THE ACTUAL LOCATION OF SOME SERVICES IS UNKNOWN.
5. THE CONTRACTOR SHALL INSTALL 50 MM RIGID INSULATION AT ALL STORM DRAIN/CULVERT CROSSINGS AS DIRECTED BY THE ENGINEER.
6. EXISTING WATER MAINS SHALL BE PLUGGED AND ABANDONED AFTER TESTING AND CHLORINATION OF THE NEW WATER MAIN AND ALL SERVICE CONNECTIONS ARE COMPLETED. NEW PIPE SHALL BE PUT INTO SERVICE ONLY AFTER VERBAL PERMISSION OF THE ENGINEER, AND THE DANVILLE FIRE DISTRICT #1.
7. WHERE WATER MAIN CROSSES OVER OR UNDER A STORM DRAIN, A FULL LENGTH OF D.I. WATER PIPE SHALL BE PLACED WITH THE MID-LENGTH CENTERED UNDER THE STORM DRAIN.
8. LISTINGS OF NIPPLES, FITTINGS, ADAPTERS, ETC. ARE FOR THE CONVENIENCE OF THE CONTRACTOR ONLY. ADDITIONAL MATERIAL MAY BE REQUIRED.
9. MINIMUM CLEARANCE BETWEEN NEW WATER MAINS AND ALL EXISTING UTILITIES, EXCEPT SEWERS, SHALL BE 150MM AT CROSSING LOCATIONS.
10. ALL BURIED FITTINGS SHALL BE MECHANICAL JOINT WITH MEGALUG RETAINER GLANDS AND THRUST RESTRAINTS. SEE MISCELLANEOUS DETAIL SHEET.
11. WHEN SERVICE INTERRUPTION IS DEEMED NECESSARY BY THE ENGINEER, THE CONTRACTOR SHALL NOTIFY THE CUSTOMERS AND DANVILLE FIRE DISTRICT #1 24 HOURS IN ADVANCE. AT NO TIME SHALL A CUSTOMER BE WITHOUT WATER FOR MORE THAN 4 HOURS.
12. SOLID SLEEVE COUPLINGS WILL BE REQUIRED TO CONNECT PREVIOUSLY INSTALLED PIPE WITH NEW PIPE.
13. CONTRACTOR SHALL HAVE VITON OR NITRILE, JOINT GASKETS ON SITE TO BE UTILIZED AS DIRECTED BY THE ENGINEER.

REPLACEMENT SHEETS ISSUED 10/5/11

Stantec

PROJECT NAME: DANVILLE	
PROJECT NUMBER: F EGC 028-3(32)	
FILE NAME: ...\Utilities\PlotFiles\FD-01.ptf	PLOT DATE: 10/4/2011
DESIGN SUPERVISOR: TOM NESBITT	DRAWN BY: STANTEC
DESIGNED BY: STANTEC	CHECKED BY: STANTEC
FIRE DISTRICT WATER PLAN FD-01	SHEET 290 OF 306

10/4/2011 11:27:12 PM V:\1953\active\195300033.0092\Utilities\PlotFiles\FD-01.ptf

GENERAL NOTES

14. SUBMITTAL'S ARE REQUIRED TO BE SUBMITTED FOR APPROVAL BY THE ENGINEER FOR ALL PIPE, FITTINGS, VALVES, VALVE BOXES, HYDRANT, INSULATION, PAINTING AND PRESSURE GAUGES. ITEM 900.645 SPECIAL PROVISION (PRESSURE REDUCING VAULT) HAS ADDITIONAL SUBMITTAL REQUIREMENTS.

15. THE CONTRACTOR SHALL PROVIDE AND MAINTAIN AT ALL TIMES DURING CONSTRUCTION AMPLE MEANS AND DEVICES TO PROMPTLY REMOVE AND DISPOSE OF ALL WATER FROM ANY SOURCE ENTERING EXCAVATIONS OR OTHER PARTS OF THE WORK. THE CONTRACTOR SHALL MAINTAIN CONTINUAL AND COMPLETE EFFECTIVENESS OF THE DEWATERING SYSTEM OPERATION TO PROVIDE A FIRM, STABLE, EXCAVATED SUBGRADE AT ALL TIMES AS REQUIRED FOR PROPER PERFORMANCE OF THE WORK.

16. CORPORATION STOPS SHALL BE MUELLER H-25000, A.Y. MCDONALD 4701B FLARED OUTLET OR APPROVED EQUAL AND MEET THE VT LEAD FREE REQUIREMENTS.

17. COPPER TUBING SHALL BE TYPE "K" SOFT TEMPER, CONFORMING TO ASTM B88. THE NAME OR TRADEMARK OF THE MANUFACTURER AND TYPE SHALL BE STAMPED AT INTERVALS ALONG THE PIPE.

18. CURB STOPS SHALL BE MUELLER H-15184 WITH H-15530 ELBOW, A.Y. MCDONALD 6000 WITH 4779M ELBOW OR APPROVED EQUAL, AND MEET THE VT LEAD FREE REQUIREMENTS.

19. SERVICE BOXES (OR VALVE BOX) SHALL BE ADJUSTABLE LENGTHS CONSISTENT WITH PIPE DEPTHS. SERVICE BOXES SHALL BE STANDARD SLIDE TYPE AS SHOWN ON THE PLANS. STATIONARY RODS SHALL BE SUPPLIED WITH SERVICE BOXES.

20. SERVICE SADDLES SHALL BE DOUBLE BAND, STAINLESS STEEL WITH A SHOP COAT FINISH AND SHALL BE FORD F202.

21. DUCTILE IRON PIPE SHALL BE CLASS 52 IN ACCORDANCE WITH ANSI A21.51/AWWA C151 AND CEMENT LINED (6MM) AND SEAL COATED INSIDE AND OUT IN ACCORDANCE WITH ANSI A21.4/AWWA C104. JOINTS SHALL BE PUSH-ON UNLESS SHOWN OTHERWISE ON THE PLANS IN ACCORDANCE WITH ANSI A21.51/AWWA C151. DUCTILE IRON FITTINGS SHALL BE IN ACCORDANCE WITH ANSI A21.51/AWWA C151 OR IF COMPACT AWWA C153, A 21.53. GASKETS SHALL BE IN ACCORDANCE WITH ANSI A21.11/AWWA C111. PIPE LENGTHS SHALL NOT EXCEED 6.1 M.

22. TAPPING SLEEVES SHALL BE AMERICAN-DARLING MECHANICAL JOINT, MUELLER H616 SERIES MECHANICAL JOINT OR APPROVED EQUAL.

23. TAPPING VALVES SHALL BE MECHANICAL JOINT AMERICAN DARLING MODEL NO. 865, MUELLER T2360 OR APPROVED EQUAL.

24. INSERTION VALVES SHALL BE A MECHANICAL JOINT SLEEVE WITH FLANGE FITTING FOR TAPPING VALVES, BE CAPABLE OF 250 PSI WORKING PRESSURE, MEET ANSI/AWWA C515, BE NUT OPERATED (OPEN LEFT), HAVE TRIPLE "O" RING SEAL, AND BE MUELLER, SMITH (AS MANUFACTURED BY US PIPE COMPANY) OR APPROVED EQUAL.

25. VALVE OR SERVICE BOXES SHALL BE CAST IRON, HEAVY PATTERN, SLIDING ADJUSTABLE TYPE WITH CAST IRON COVER. THE UPPER SECTION SHALL HAVE A FLANGE TO PREVENT SETTLING. VALVE BOXES SHALL HAVE BARRELS NOT LESS THAN 125 MM INSIDE DIAMETER AND LENGTHS ADAPTED TO VALVE DEPTH. THE BARRELS SHALL LAP AT LEAST 150 MM WHEN IN THE MOST EXTENDED POSITION. VALVE BOXES SHALL HAVE "WATER" CAST INTO THE COVER.

26. BURIED COUPLINGS SHALL BE COMPLETELY COATED WITH TWO COATS OF BITUMINOUS PAINT.

27. ALL BURIED VALVES SHALL BE PROVIDED WITH VALVE BOXES CENTERED ON THE VALVE OPERATING NUT.

28. RIGID POLYSTYRENE INSULATION (BLUE BOARD) SHALL BE 50 MM X 600 MM X 2.44 M, AS MANUFACTURED BY DOW CHEMICAL OR US GYPSUM.

29. ALL 80 MM TO 300 MM GATE VALVES SHALL BE RESILIENT WEDGE TYPE CONFORMING TO AWWA C509, BE MECHANICAL JOINT WITH RETAINER GLAND, NON-RISING STEM, NUT OPERATED (OPEN LEFT), CAPABLE OF A WORKING PRESSURE OF 250 PSI. RESILIENT WEDGE GATE VALVES SHALL BE WATEROUS SERIES 500, CLOW F6100 OR APPROVED EQUAL AND MEET VT LEAD FREE REQUIREMENTS.

30. HYDRANTS SHALL MEET OR EXCEED AWWA C502 AND BE EDDY MODEL F-2640 OR APPROVED EQUAL.

31. HYDRANT INSTALLATION SHALL BE IN ACCORDANCE WITH MANUFACTURER'S INSTRUCTIONS EACH WITH A DRAINAGE PIT 1 METER IN DIAMETER AND .6 METERS BELOW AND TO THE REAR OF THE HYDRANT. PAYMENT INCIDENTAL TO THE HYDRANT.

32. HYDRANTS REMOVED SHALL REMAIN THE PROPERTY OF THE OWNER.

33. CONTRACTOR SHALL BE RESPONSIBLE FOR WATER SERVICE CONNECTIONS INCLUDING FURNISHING CORPORATION STOPS, CURB STOPS, CURB BOXES, FITTINGS, AND COPPER TUBING WHERE NECESSARY TO ALLOW FOR HOOK-UP TO THE WATER MAIN. THE CONTRACTOR SHALL PROVIDE 24-HOUR ADVANCE NOTICE IN WRITING TO ALL WATER CUSTOMERS REGARDING ANY DISRUPTION IN SERVICE. PROVIDE A COPY OF WRITTEN NOTICE TO THE OWNER AND THE ENGINEER.

34. ADAPTER COUPLINGS MAY BE REQUIRED FOR FITTING NEW SERVICES TO EXISTING SERVICE LINES. SUCH FITTINGS SHALL BE COMPRESSION CONNECTIONS AND PROVIDE ELECTRICAL CONTINUITY. FITTINGS SHALL BE A.Y. MCDONALD, FORD OR MUELLER.

35. INSTALL CURB STOP AND CURB BOX (NEW SERVICE INSTALLATION) AT THE APPROXIMATE PROPERTY LINE OR AS OTHERWISE DIRECTED BY THE ENGINEER.

36. ALL PAINT SHALL BE OF THE PROPER TYPE AND THICKNESS AS MANUFACTURED BY TNEMEC COMPANY OR APPROVED EQUAL. PAINT SHALL BE APPLIED AND SURFACES PREPARED IN ACCORDANCE WITH THE MANUFACTURER'S RECOMMENDATIONS. AREAS TO BE PAINTED SHALL BE HYDRANTS AND ALL INTERIOR VALVE VAULT PIPING.

REPLACEMENT SHEETS ISSUED 10/5/11

PROJECT NAME:	DANVILLE
PROJECT NUMBER:	F EGC 028-3(32)
FILE NAME: ...\Utilities\PlotFiles\FD-02.ptf	PLOT DATE: 10/4/2011
DESIGN SUPERVISOR: TOM NESBITT	DRAWN BY: STANTEC
DESIGNED BY: STANTEC	CHECKED BY: STANTEC
FIRE DISTRICT WATER PLAN FD-02	SHEET 291 OF 306

Stantec

10/4/2011 12:12 PM V:\1953\active\195300033.0192\Utilities\PlotFiles\FD-02.ptf

VAOT Metric

CUT, CAP AND ABANDON
STA. 18+623, 5.4R
STA. 18+627, 5.4R
STA. 18+670, 5.2R
STA. 18+674, 5.2R
(4) 200mm END CAPS, MJ w/RG.

CONNECTION
STA. ~~18+677, 5.2R~~ 18+583, 5.9 R
200mm SOLID SLEEVE, MJ w/RG
200mm NIPPLE, VARIABLE LENGTH

CUT, CAP AND ABANDON
STA. 18+751, 5.0
200mm END CAP, MJ w/RG.

INSERTION VALVE
STA. 18+739, 5.2R
200mm INSERTION VALVE, MJ w/RG AND BOX

20 mm COPPER WATER SERVICE w/ CORPORATION AND CURB STOP w/ BOX (TYP. UNLESS OTHERWISE NOTED)

200mm D. I. CLASS 52

CONNECTION
STA. 18+620, 5.4R
200mm SOLID SLEEVE, MJ w/RG
200mm NIPPLE, VARIABLE LENGTH

CONNECTIONS
STA. 18+630, 5.4R
STA. 18+667, 5.2R
(2) 200mm SOLID SLEEVE, MJ w/RG
(2) 200mm NIPPLE, VARIABLE LENGTH

CONNECTION
STA. 18+677, 5.2R W/FLASHING LIGHTS
200mm NIPPLE, VARIABLE LENGTH
200mm SOLID SLEEVE, MJ w/RG

ADJUST HYDRANT TO GRADE - INCIDENTAL TO NEW HYDRANT CONSTRUCTION

MANUAL AIR RELEASE/ CHLORINE INJECTION POINT
STA 18+750, 6.0R

BENDS
STA. 18+622, 5.4R
STA. 18+623, 6.5R
STA. 18+627, 6.5R
STA. 18+628, 5.4R
(4) 200mm 1/8 BENDS, MJ w/RG.
(3) 200mm NIPPLE, VARIABLE LENGTH

BENDS
STA. 18+669, 5.2R
STA. 18+670, 6.6R
STA. 18+674, 6.6R
STA. 18+675, 5.2R
(4) 200mm 1/8 BENDS, MJ w/RG.
(3) 200mm NIPPLE, VARIABLE LENGTH

BENDS
STA. 18+749, 5.0R
STA. 18+751, 7.0R
(2) 200mm 1/8 BENDS, MJ w/RG.
200mm NIPPLE, VARIABLE LENGTH

MATCHLINE - SEE WATER PLAN FD-04

VT STATE PLANE GRID

N

US ROUTE 2

18+620 18+640 18+660 18+680 18+700 18+720 18+740 18+760 18+780

B1-L B1-C B1-R B2-C B2-R

B87 B88 B89 B90

R-1 R-2 R-3 R-4 R-5 R-6 R-7 R-8

REMOVE (T)

SITE PLAN

0 10 20
SCALE 1:250

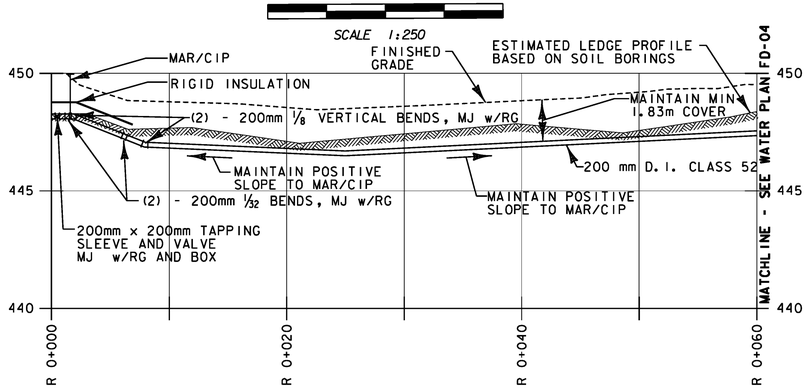

WATER MAIN PROFILE

0 10 20
SCALE 1:250 HORIZONTAL

0 5 10
SCALE 1:125 VERTICAL

REPLACEMENT SHEETS ISSUED 10/5/11

STA. R 0+000 TO STA. R 0+060

PROJECT NAME: DANVILLE
PROJECT NUMBER: F EGC 028-3(32)

FILE NAME: ...\Utilities\PlotFiles\FD-03.ptf
DESIGN SUPERVISOR: TOM NESBITT
DESIGNED BY: STANTEC
FIRE DISTRICT WATER DETAILS FD-03

PLOT DATE: 10/4/2011
DRAWN BY: STANTEC
CHECKED BY: STANTEC
SHEET 292 OF 306

Stantec

10/4/2011 12:17:17 PM V:\1953\active\195300033.1092\Utilities\PlotFiles\FD-03.ptf

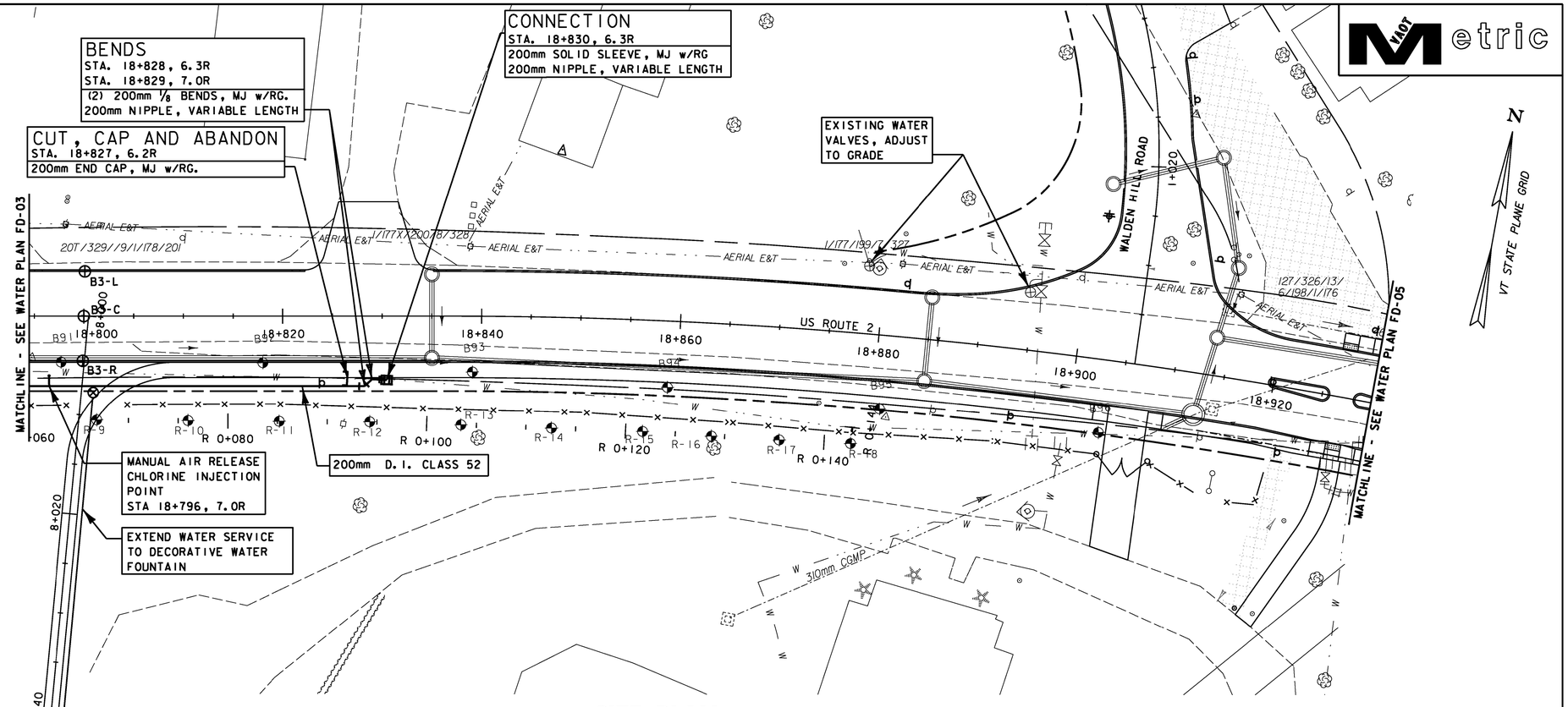

SITE PLAN

0 10 20
SCALE 1:250

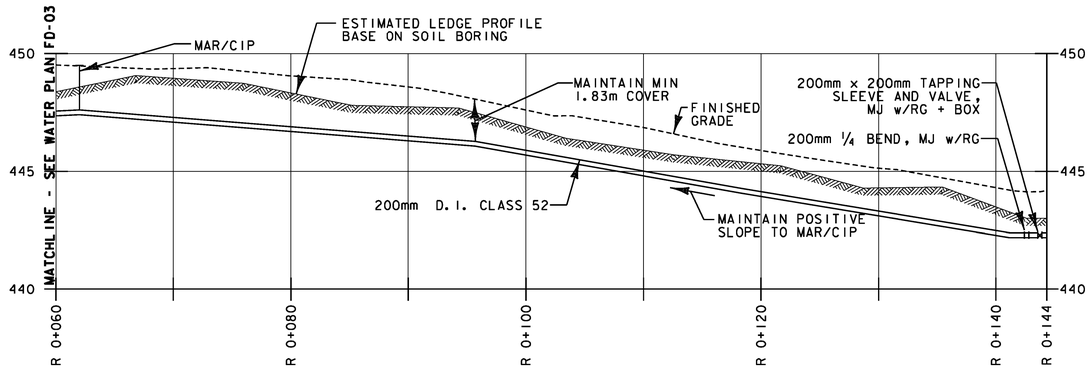

WATER MAIN PROFILE

0 10 20 HORIZONTAL
SCALE 1:250

0 5 10 VERTICAL
SCALE 1:125

REPLACEMENT SHEETS ISSUED 10/5/11

STA. R 0+060 TO STA. R 0+144

PROJECT NAME: DANVILLE	
PROJECT NUMBER: F EGC 028-3(32)	
FILE NAME: ...\Utilities\PlotFiles\FD-04.ptf	PLOT DATE: 10/4/2011
DESIGN SUPERVISOR: TOM NESBITT	DRAWN BY: STANTEC
DESIGNED BY: STANTEC	CHECKED BY: STANTEC
FIRE DISTRICT WATER PLANS FD-04	SHEET 293 OF 306

Stantec

10/4/2011 1:27:18 PM V:\1953\active\195310033_10192\Utilities\PlotFiles\FD-04.ptf

VAOT Metric

BEND
STA. 18+933, 6.7L
200mm 1/4 BEND, MJ w/RG.

CONNECTION
STA. 18+932, 3.8R
CONTRACTOR SHALL REMOVE EXISTING 200mm END CAP, CLEAN THE WATER MAIN, AND CONNECT WITH A 200mm 1/4 BEND, MJ w/RG.

CUT, CAP AND ABANDON
STA. 18+932, 9.2R
(2) - 200mm END CAPS, MJ w/RG

REMOVE EXISTING HYDRANT
STA. 18+989, 8.1R
CONTRACTOR SHALL CUT, CAP AND REMOVE EXISTING HYDRANT AT BRANCH MAIN
150mm END CAP, MJ w/RG

BEND
STA. 18+949, 6.8L
200mm 1/32 BEND, MJ w/RG.

20mm COPPER WATER SERVICE w/ CORPORATION AND CURB STOP w/ BOX. (TYP. UNLESS OTHERWISE NOTED)

HYDRANT
STA 19+017, 6.7L
200mm X 150mm HYDRANT TEE, MJ w/RG
150mm GATE VALVE ON MJ w/RG AND BOX
150mm NIPPLE, VARIABLE LENGTH HYDRANT

MAINTAIN MIN 1.52m SEPARATION FROM EXISTING STORM DRAIN

MANUAL AIR RELEASE/ CHLORINE INJECTION POINT
STA 19+033, 6.8L

200 mm D.I. CLASS 52

MATCHLINE - SEE WATER PLAN FD-04

MATCHLINE - SEE WATER PLAN FD-06

SEE ISLAND DETAIL SHEET IDS-1 FOR LAYOUT INFORMATION

SEE BLOW-UP DETAIL ON THIS SHEET

S83° 44' 28.6"E

US ROUTE 2

LILACS, M.MAPLE, MH SEWER, PED.YIELD, P-40, P-38, P-38A, P-39C, P-39D, P-35, P-34, 460mm COMB, W 0+040, W 0+060, W 0+080, W 0+100, W 0+120, B4-L, B4-C, B4-R, B5-L, B5-C, B5-R, 18+940, 18+960, 18+980, 19+000, 19+020, 19+040, 19+060, AERIAL E&T, COMB.POLE, 176X/197/320W/325/13/5, M.SPRUCE, S.ELM, M.ELM, M.W.BIRCH, M.MAPLE, S.MAPLE, S5, S6, S7, S8, CURVE #1, IRON PIN, IRON PIPE, SIGN NO PARK, SIGN INFO, 324/4/196/175, 174/195/323/31, GUY WIRE, GUY, GUIDE POST, STEEL GUIDE POST, MONITOR WELL, 310mm COMB, GRAVEL DRIVE, PAVED DRIVE, CONC.PAD, WOOD HOUSE, WOOD BUILDING, GARDEN, G.WALL, WSO, PT STA 18+981.27I, 0, 10, 20, SCALE 1:250

SITE PLAN

N
VT STATE PLANE GRID

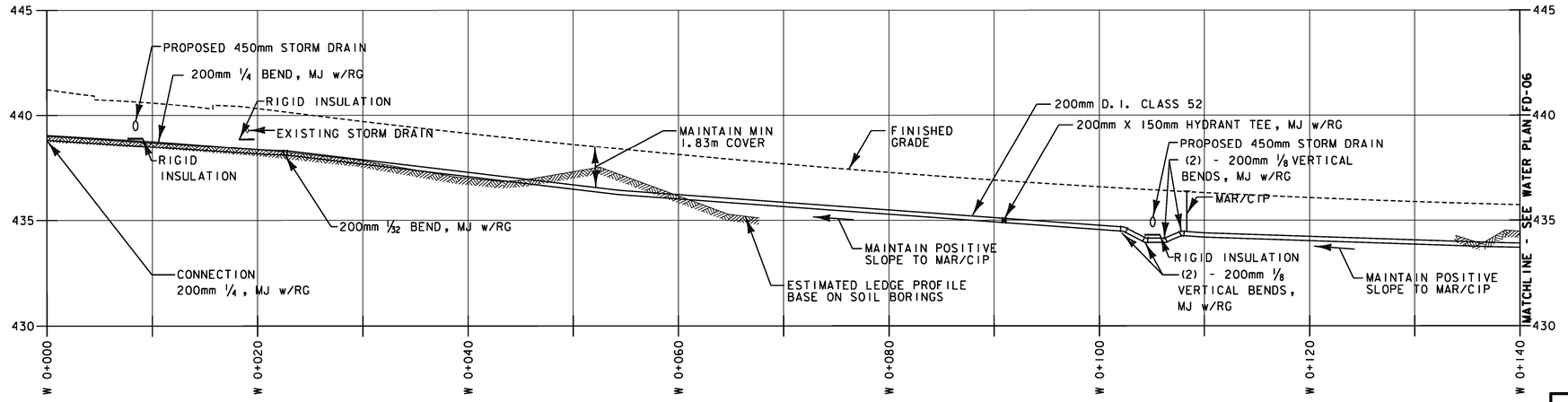

WATER MAIN PROFILE

0, 10, 20 — SCALE 1:250 — HORIZONTAL

0, 5, 10 — SCALE 1:125 — VERTICAL

REPLACEMENT SHEETS ISSUED 10/5/11

STA. W 0+000 TO STA. W 0+140

Stantec

PROJECT NAME: DANVILLE
PROJECT NUMBER: F EGC 028-3(32)

FILE NAME: ...\Utilities\PlotFiles\FD-05.ptf
DESIGN SUPERVISOR: TOM NESBITT
DESIGNED BY: STANTEC
FIRE DISTRICT WATER PLANS FD-05

PLOT DATE: 10/4/2011
DRAWN BY: STANTEC
CHECKED BY: STANTEC
SHEET 294 OF 306

10/4/2011 12:19 PM V:\1953\active\195310033_1092\Utilities\PlotFiles\FD-05.ptf

VTrans Metric

SPRINKLER SERVICE
STA. 19+103, 9.2L

CONTRACTOR SHALL REMOVE EXISTING 150mm END CAP, CLEAN THE PIPE, AND CONNECT TO THE EXISTING STUB WITH: 150mm SOLID SLEEVE, MJ w/RG
150mm NIPPLE, VARIABLE LENGTH
150mm 11.4 BEND, MJ w/RG
150mm NIPPLE, VARIABLE LENGTH
150mm GATE VALVE, MJ w/RG
150mm NIPPLE, VARIABLE LENGTH
200mm x 150mm TEE, MJ w/RG

MAINLINE VALVE
STA. 19+094, 8.8L
200mm GATE VALVE
MJ w/RG AND BOX

CUT, CAP AND ABANDON
STA. 19+166, 15.8L
(2) - 200mm END CAPS, MJ w/RG

CONNECTION
STA. 19+224, 2.4L
200mm x 200mm TEE, MJ w/RG

CONNECTION
STA. 19+176, 1.7R

CONTRACTOR SHALL REMOVE EXISTING 300mm END CAP, CLEAN THE WATER MAIN AND CONNECT WITH
300mm SOLID SLEEVE MJ w/RG
300mm NIPPLE, VARIABLE LENGTH
300mm x 200mm REDUCER, MJ w/RG
200mm NIPPLE, VARIABLE LENGTH
200mm x 200mm TEE, MJ w/RG

MAINLINE GATE VALVE
19+148, 7.4L
200mm GATE VALVE
MJ w/RG AND BOX

FROST-FREE MANHOLE
STA. 19+157, 12.7 R
SEE FD-13 FOR DETAIL

SERVICE CONNECTION
STA. 4+020, 14.2R & 19+157, 13R
CONNECT TO NEW WATER HOSE BIBB AND FROST-FREE MANHOLE

FROST-FREE MANHOLE
STA. 4+021, 15.0 R
SEE FD-13 FOR DETAIL

REMOVE EXISTING HYDRANT
STA. 4+020, 4.2R

CONTRACTOR SHALL CUT, CAP AND REMOVE EXISTING HYDRANT @ BRANCH MAIN 150mm END CAP, MJ w/RG

TEES
STA. 19+176.9, 3.5L & 19+176.9, 4.3L
200mm x 200mm TEE, MJ w/RG.

MAINLINE GATE VALVES
STA 19+220, 2.5L & STA 19+239, 1.6L
200mm GATE VALVE
MJ w/RG AND BOX

REMOVE EXISTING HYDRANT
STA. 19+213.64, 9.4R

CONTRACTOR SHALL CUT, CAP AND REMOVE EXISTING HYDRANT AT BRANCH MAIN 150mm END CAP, MJ w/RG

20mm COPPER WATER SERVICE w/ CORPORATION AND CURB STOP w/ BOX. (TYP. UNLESS OTHERWISE NOTED)

MATCHLINE - SEE WATER PLAN FD-05

MATCHLINE - SEE WATER PLAN FD-07

MATCHLINE - SEE WATER PLAN FD-09

SITE PLAN

0 10 20
SCALE 1:250

WATER MAIN PROFILE

0 10 20 HORIZONTAL
SCALE 1:250

0 5 10 VERTICAL
SCALE 1:125

ESTIMATED LEDGE PROFILE BASE ON SOIL BORINGS
PROPOSED 600mm STORM DRAIN
RIGID INSULATION
FINISHED GRADE
200mm D.I. CLASS 52
200mm VALVE MJ w/RG AND BOX
200mm x 200mm TEE, MJ w/RG
PROPOSED 450mm STORM DRAIN
RIGID INSULATION
MAINTAIN MIN 1.83m COVER
(4) - 200mm 1/8 VERTICAL BENDS, MJ w/RG
(2) - 200mm x 200mm TEES, MJ w/RG
MAINTAIN POSITIVE SLOPE TO MAR/CIP
(4) - 200mm 1/8 VERTICAL BENDS, MJ w/RG
200mm VALVE MJ w/RG AND BOX

MATCHLINE - SEE WATER PLAN FD-05
MATCHLINE - SEE WATER PLAN FD-09

W 0+140 RW 0+020 RW 0+040 RW 0+060 RW 0+080 RW 0+100 RW 0+120 RW 0+140 RW 0+160 W 0+320 W 0+330

420 425 430 435 440

REPLACEMENT SHEETS ISSUED 10/5/11

STA. W 0+140 TO STA. W 0+340

PROJECT NAME: DANVILLE
PROJECT NUMBER: F EGC 028-3(32)

FILE NAME: ...\Utilities\PlotFiles\FD-06.ptf
DESIGN SUPERVISOR: TOM NESBITT
DESIGNED BY: STANTEC
FIRE DISTRICT WATER PLANS FD-06

PLOT DATE: 10/4/2011
DRAWN BY: STANTEC
CHECKED BY: STANTEC
SHEET 295 OF 306

Stantec

10/4/2011 12:27:20 PM V:\1953\active\19530033.0192\Utilities\PlotFiles\FD-06.ptf

MATCHLINE - SEE WATER PLAN FD-06

MATCHLINE - SEE WATER PLAN FD-06

MATCHLINE - SEE WATER PLAN FD-06

HYDRANT
STA. 4+031, 7.9L
200mm x 150mm HYDRANT TEE
150mm GATE VALVE
150mm NIPPLE, VARIABLE LENGTH
HYDRANT

FUTURE STUB
STA. 5+035, 5.7RT.
200mm x 200mm TEE, MJ w/RG
200mm NIPPLE, VARIABLE LENGTH
200mm GATE VALVE, MJ w/RG AND BOX
200mm NIPPLE, VARIABLE LENGTH
MAR/CIP
200mm END CAP, MJ w/RG

20mm COPPER WATER SERVICE w/ CORPORATION AND CURB STOP w/BOX. (TYP. UNLESS OTHERWISE NOTED)

MANUAL AIR RELEASE/ CHLORINE INJECTION POINT
STA 4+031, 5.5 RT.

200mm D.I. CLASS 52

INTERCONNECTION
STA. 4+030, 6.5 RT.
200mm 1/4 BEND, MJ w/RG
200mm NIPPLE, VARIABLE LENGTH
200mm GATE VALVE, MJw/RG AND BOX
200mm NIPPLE, VARIABLE LENGTH
200mm 1/4 BEND, MJ w/RG
200mm NIPPLE, VARIABLE LENGTH
200mm SOLID SLEEVE, MJ w/RG
200mm END CAP, MJ w/RG

CUT, CAP AND ABANDON
STA. 4+055, 1.1 RT.
(2) - 100mm END CAPS, MJ w/RG

NOTE:
ADJUST VALVE LOCATIONS IN FIELD TO AVOID E&T CONFLICTS

MANUAL AIR RELEASE/ CHLORINE INJECTION POINT
STA 4+100, 3.8 RT.

CONNECTION
STA. 4+100, 7.9 RT.
200mm x 200mm TAPPING SLEEVE AND VALVE, MJ w/ RG AND BOX

BEND
STA. 2+200, 6.3 LT.
200mm 1/4 BEND, MJ w/RG

CONNECTION
STA. 5+110, 0.5 RT.
200mm x 200mm TEE, MJ w/RG
200mm NIPPLE, VARIABLE LENGTH
200mm GATE VALVE, MJ w/RG
200mm 1/8 BEND, MJ w/RG

HYDRANT
STA. 2+231, 3.3 LT.
200mm x 150mm HYDRANT TEE, MJ w/RG
150mm GATE VALVE, MJ w/RG
150mm NIPPLE, VARIABLE LENGTH
HYDRANT

INTERCONNECTION
STA. 2+233, 3.1 LT.
200mm x 100mm TEE, MJ w/RG
100mm NIPPLE, VARIABLE LENGTH
100mm 1/4 BEND, MJ w/RG
100mm NIPPLE, VARIABLE LENGTH
100mm SOLID SLEEVE, MJ w/RG

FUTURE STUB
STA. 2+236, 3.1 LT.
200mm GATE VALVE, MJ w/RG
100mm NIPPLE, VARIABLE LENGTH
MAR/CIP
200mm END CAP, MJ w/RG

SEE WATER PLAN FD-8 FOR PROFILE

REPLACEMENT SHEETS ISSUED 10/5/11

SITE PLAN

SCALE 1:250

STA. B 0+013 TO STA. W 0+189

PROJECT NAME: DANVILLE
PROJECT NUMBER: F EGC 028-3(32)

FILE NAME: ...\Utilities\PlotFiles\FD-07.ptf
DESIGN SUPERVISOR: TOM NESBITT
DESIGNED BY: STANTEC
FIRE DISTRICT WATER PLANS FD-07

PLOT DATE: 10/4/2011
DRAWN BY: STANTEC
CHECKED BY: STANTEC
SHEET 296 OF 306

Stantec

10/4/2011 1:27:20 PM V:\1953\active\195360033_0092\Utilities\PlotFiles\FD-07.ptf

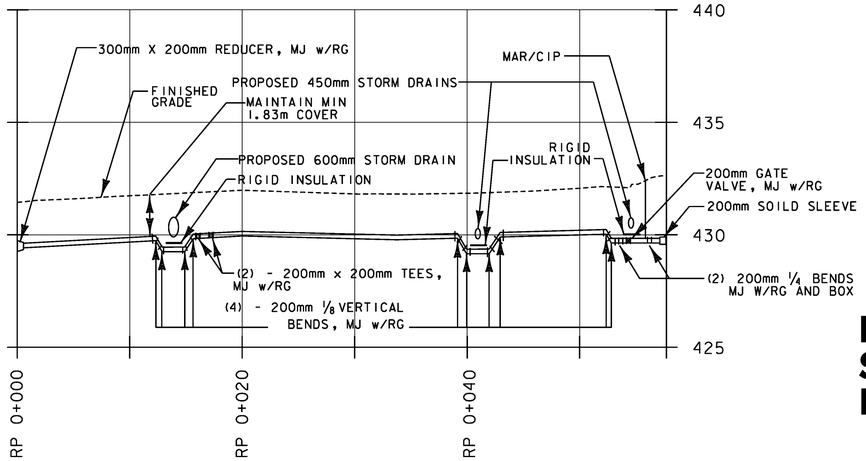

PEACHAM RD.

NOTE:
SEE WATER PLAN FD-07 FOR PLAN VIEW

PROPOSED DUCT BANKS

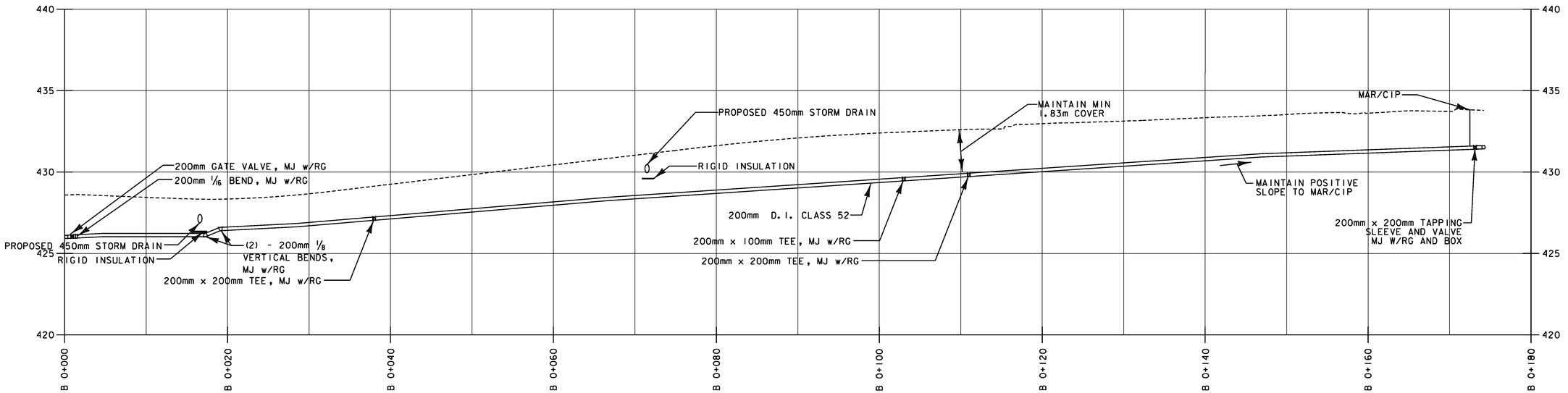

BRAINARD ST.

REPLACEMENT SHEETS ISSUED 10/5/11

WATER MAIN PROFILE BRAINARD & PEACHAM RD.

0 10 20 HORIZONTAL
SCALE 1:250

0 5 10 VERTICAL
SCALE 1:125

STA. B 0+000 TO STA. B 0+179
STA. P 0+000 TO STA. P 0+038

PROJECT NAME: DANVILLE
PROJECT NUMBER: F EGC 028-3(32)

FILE NAME: ...\Utilities\PlotFiles\FD-08.ptf
DESIGN SUPERVISOR: TOM NESBITT
DESIGNED BY: STANTEC
FIRE DISTRICT WATER PLANS FD-08

PLOT DATE: 10/4/2011
DRAWN BY: STANTEC
CHECKED BY: STANTEC
SHEET 297 OF 306

Stantec

10/4/2011 12:12:21 PM V:\1953\active\19530033.0192\Utilities\PlotFiles\FD-08.ptf

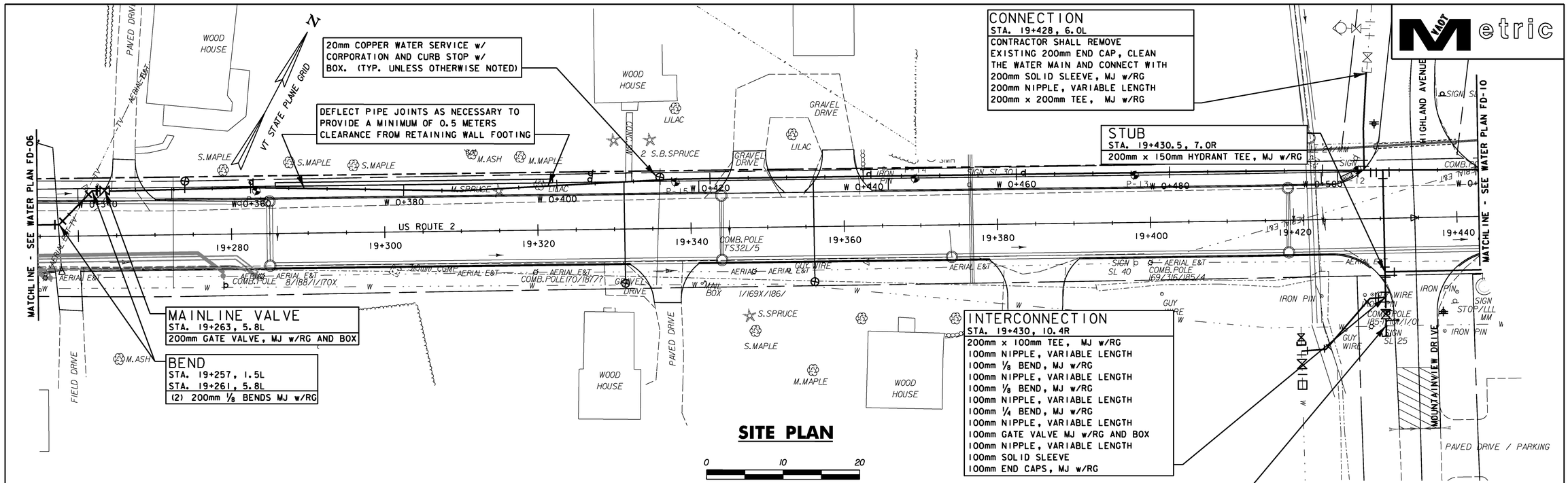

SITE PLAN

0 10 20
SCALE 1:250

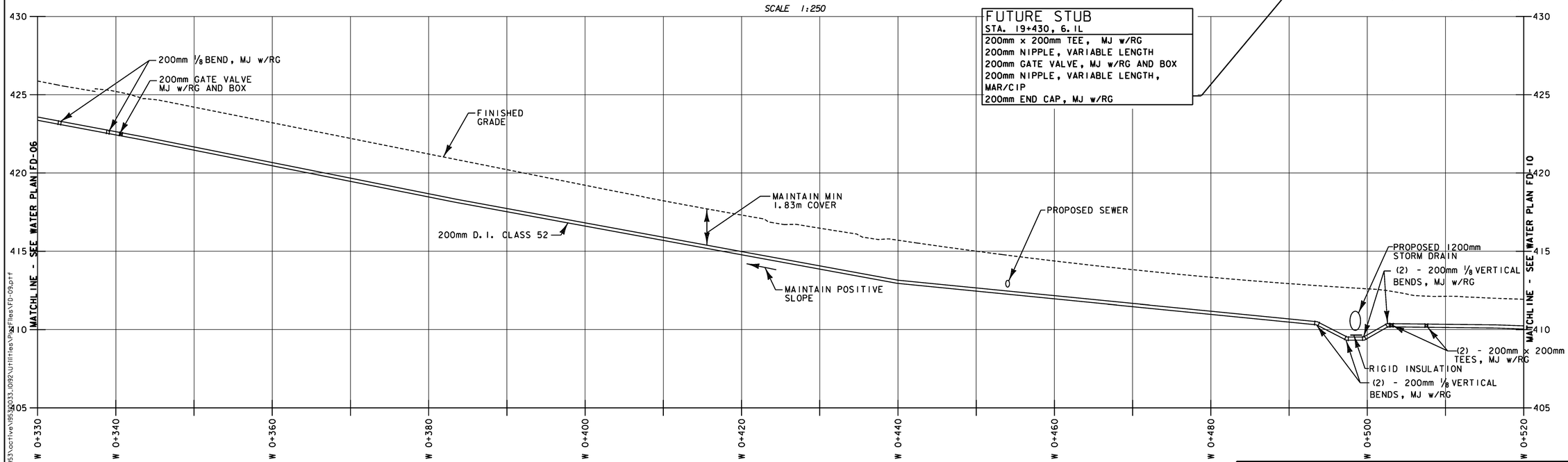

WATER MAIN PROFILE

HORIZONTAL 0 10 20 SCALE 1:250

VERTICAL 0 5 10 SCALE 1:125

REPLACEMENT SHEETS ISSUED 10/5/11

STA. W 0+330 TO STA. W 0+520

Stantec

PROJECT NAME: DANVILLE	
PROJECT NUMBER: F EGC 028-3(32)	
FILE NAME: ...\Utilities\PlotFiles\FD-09.ptf	PLOT DATE: 10/4/2011
DESIGN SUPERVISOR: TOM NESBITT	DRAWN BY: STANTEC
DESIGNED BY: STANTEC	CHECKED BY: STANTEC
FIRE DISTRICT WATER PLANS FD-09	SHEET 298 OF 306

10/4/2011 1:27:22 PM V:\1953\active\19530033.10192\Utilities\PlotFiles\FD-09.ptf

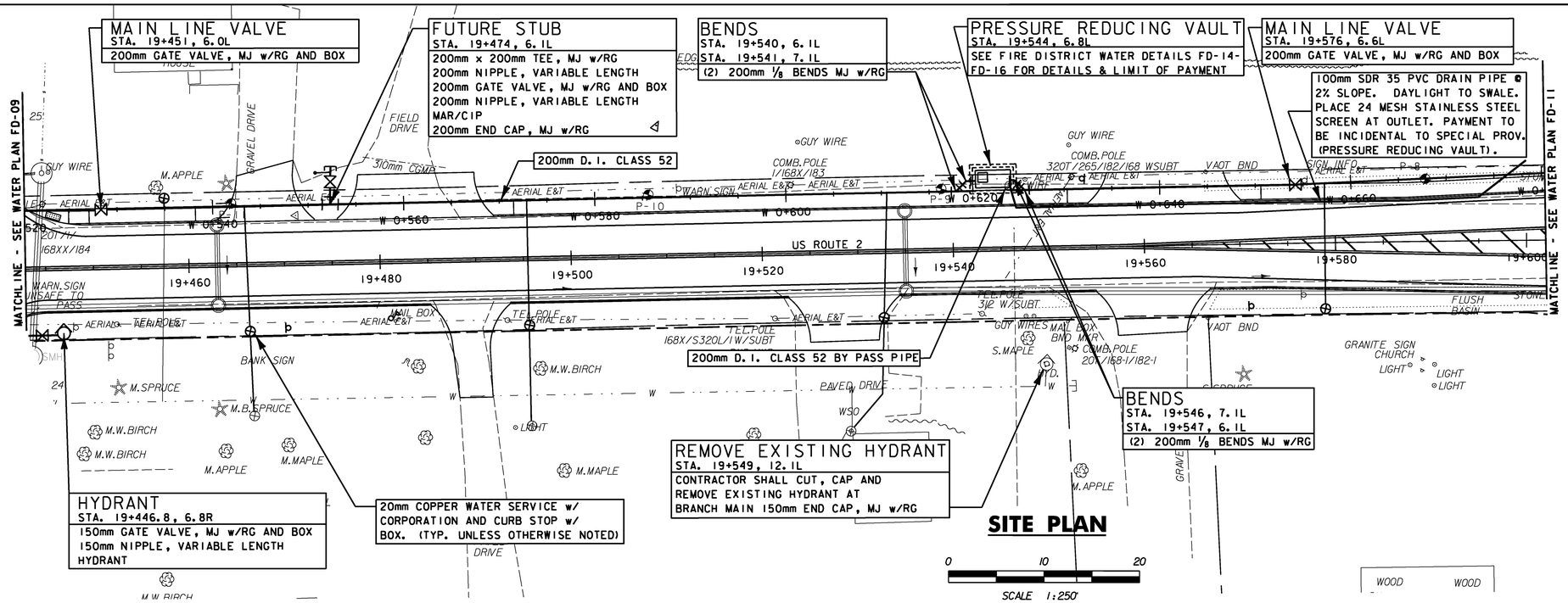

SITE PLAN

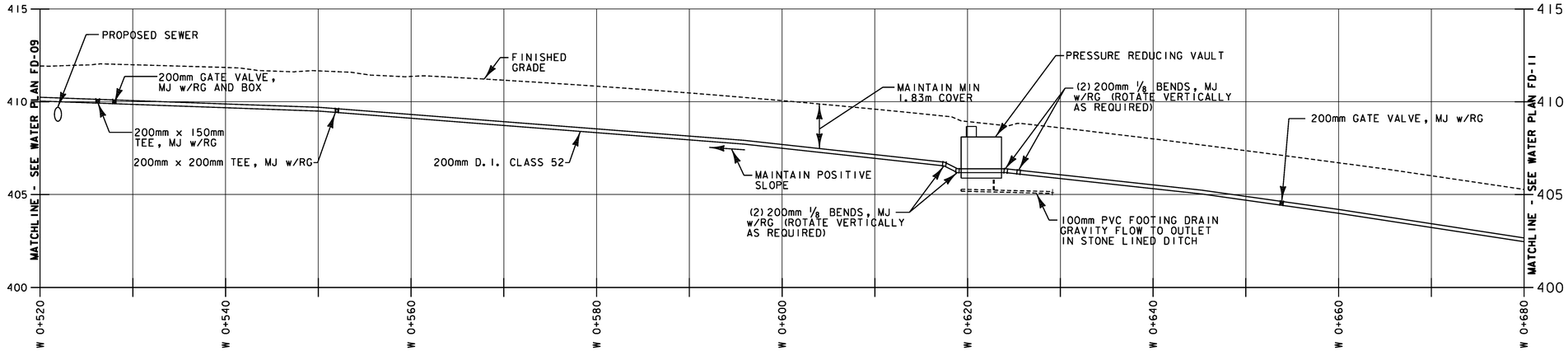

WATER MAIN PROFILE

0 10 20 HORIZONTAL
SCALE 1:250

0 5 10 VERTICAL
SCALE 1:125

REPLACEMENT SHEETS ISSUED 10/5/11

STA.W 0+520 TO STA.W 0+680

PROJECT NAME: DANVILLE	
PROJECT NUMBER: F EGC 028-3(32)	
FILE NAME: ...\Utilities\PlotFiles\FD-10.ptf	PLOT DATE: 10/4/2011
DESIGN SUPERVISOR: TOM NESBITT	DRAWN BY: STANTEC
DESIGNED BY: STANTEC	CHECKED BY: STANTEC
FIRE DISTRICT WATER PLANS FD-10	SHEET 299 OF 306

Stantec

10/4/2011 1:27:23 PM V:\1953\active\195310033_10192\Utilities\PlotFiles\FD-10.ptf

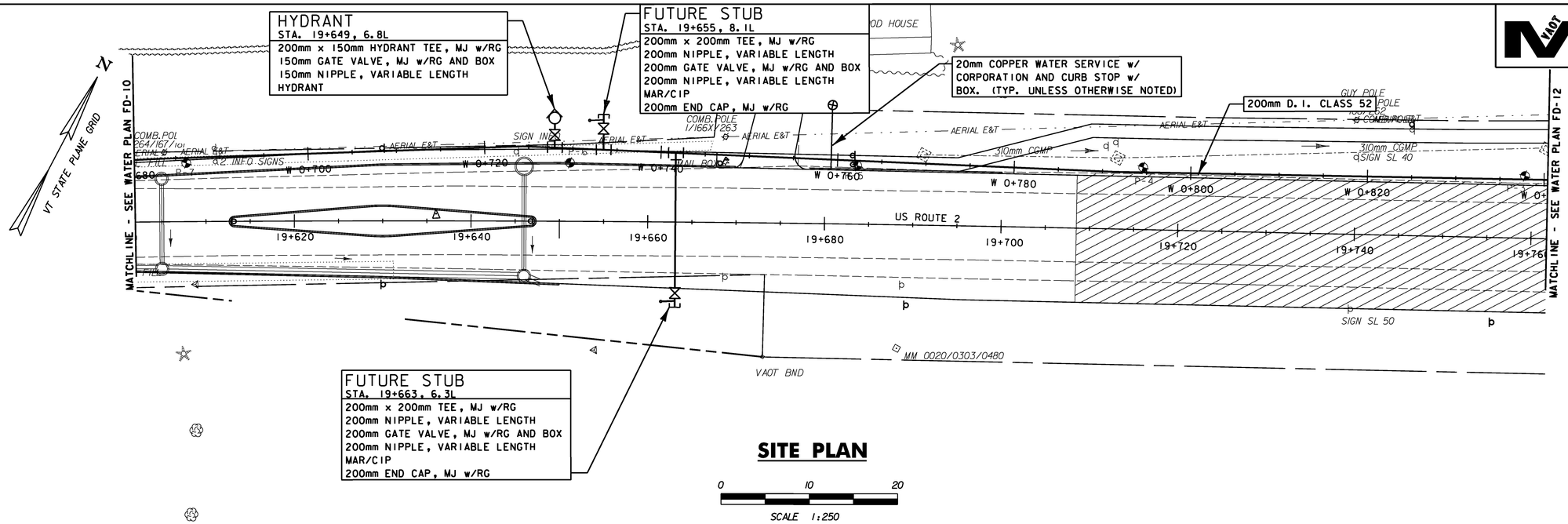

SITE PLAN

0 10 20

SCALE 1:250

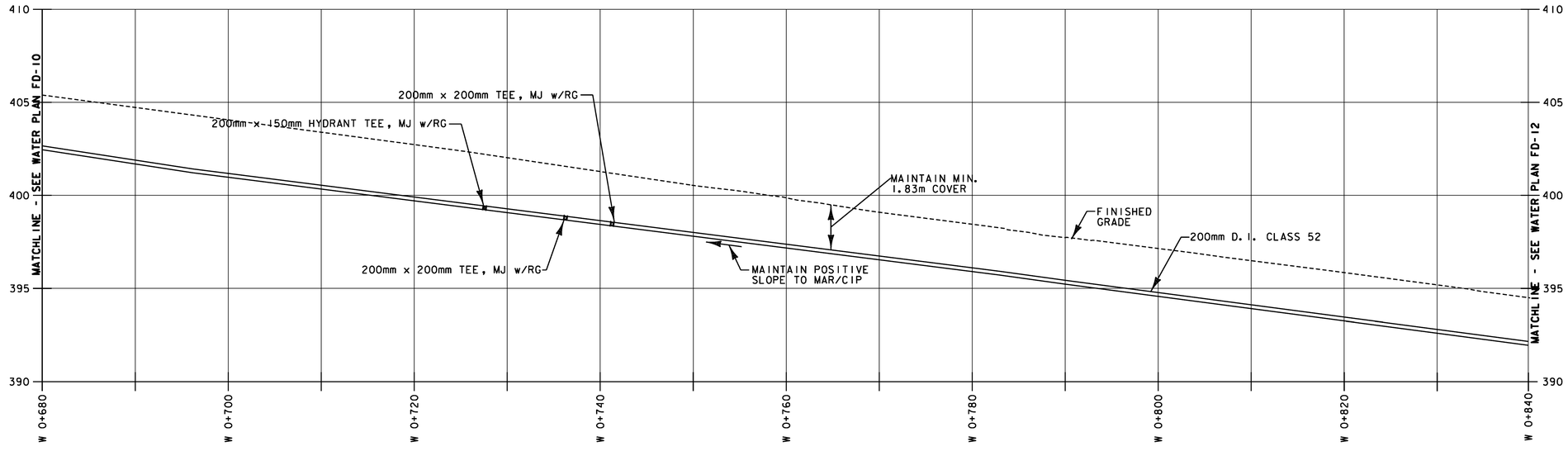

WATER MAIN PROFILE

0 10 20

HORIZONTAL SCALE 1:250

0 5 10

VERTICAL SCALE 1:125

REPLACEMENT SHEETS ISSUED 10/5/11

STA. W 0+680 TO STA. W 0+840

PROJECT NAME:	DANVILLE
PROJECT NUMBER:	F EGC 028-3(32)
FILE NAME: ...\Utilities\PlotFiles\FD-11.ptf	PLOT DATE: 10/4/2011
DESIGN SUPERVISOR: TOM NESBITT	DRAWN BY: STANTEC
DESIGNED BY: STANTEC	CHECKED BY: STANTEC
FIRE DISTRICT WATER PLANS FD-11	SHEET 300 OF 306

Stantec

10/4/2011 12:12:4 PM V:\1953\active\195300033.092\Utilities\PlotFiles\FD-11.ptf

VTrans Metric

EVERETT W. & NORMA S. DREW

BUILDING

CATHERINE J. BEATTIE TRUST

HYDRANT
STA. 19+821, 6.8L
200mm x 150mm HYDRANT TEE, MJ w/RG
150mm GATE VALVE, MJ w/RG AND BOX
150mm NIPPLE, VARIABLE LENGTH
HYDRANT

FUTURE STUB
STA. 19+828, 6.9L
200mm GATE VALVE, MJ w/RG AND BOX
200mm NIPPLE, VARIABLE LENGTH
MAR/CIP
200mm END CAP, MJ w/RG

200mm D.I. CLASS 52

310mm CGMP

AERIAL E&T

GRAVEL DRIVE

P-2

P-1

W 0+840 W 0+860 W 0+880 W 0+900 W 0+908

19+780 19+800 19+820 19+840 19+860 19+880 19+900 19+920 19+940

US ROUTE 2

CONSTRUCTION ℄

MATCHLINE - SEE WATER PLAN FD-11

VT STATE PLANE GRID

20mm COPPER WATER SERVICE w/ CORPORATION AND CURB STOP w/ BOX. (TYP. UNLESS OTHERWISE NOTED)

SITE PLAN

0 10 20

SCALE 1:250

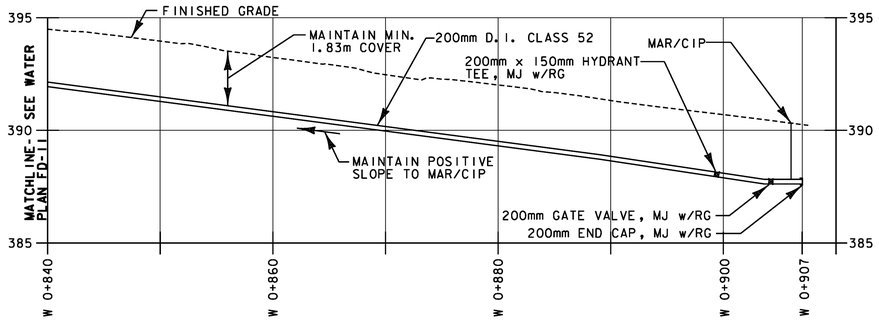

WATER MAIN PROFILE

0 10 20 HORIZONTAL

SCALE 1:250

0 5 10 VERTICAL

SCALE 1:125

REPLACEMENT SHEETS ISSUED 10/5/11

STA.W 0+840 TO STA. W 0+907

PROJECT NAME: DANVILLE
PROJECT NUMBER: F EGC 028-3(32)

FILE NAME: ...\Utilities\PlotFiles\FD-12.ptf
DESIGN SUPERVISOR: TOM NESBITT
DESIGNED BY: STANTEC
FIRE DISTRICT WATER PLANS FD-12

PLOT DATE: 10/4/2011
DRAWN BY: STANTEC
CHECKED BY: STANTEC
SHEET 301 OF 306

Stantec

10/4/2011 12:12:24 PM V:\1953\active\195310033_1092\Utilities\PlotFiles\FD-12.ptf

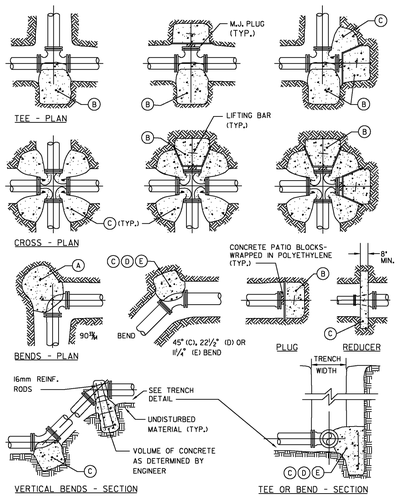

THRUST BLOCK DETAILS

NOT TO SCALE

THRUST BLOCK SCHEDULE
SQUARE METERS OF CONCRETE THRUST
BLOCKING BEARING ON UNDISTURBED MATERIAL

REACTION TYPE		PIPE SIZE 350mm, 400mm, 450mm											
		100mm	150mm	200mm	250mm	300mm	350mm	400mm	450mm	500mm	600mm	750mm	900mm
TEST PRESSURE-1690 kN/m^2	(A)	0.89	2.19	3.92	5.57	8.62	10.91	15.41	18.02	24.06	34.64	53.83	77.39
	(B)	0.65	1.55	2.76	4.19	6.09	8.37	10.89	13.87	17.01	24.49	38.06	54.72
	(C)	0.48	1.19	2.12	3.01	4.66	5.91	8.34	9.71	13.02	18.75	29.13	41.88
	(D)	0.25	0.60	1.08	1.54	2.37	3.01	4.25	4.97	6.64	9.56	14.85	21.35
	(E)	0.13	0.30	0.54	0.77	1.19	1.52	2.12	2.51	3.33	4.79	7.45	10.71
Other test pressures for the above reactions		TEST PRESSURE TO BE 1380 kN/m^2 MIN. AT LOW END OF THE TEST SECTION. SQUARE METERS OF CONCRETE THRUST BLOCKING FOR OTHER TEST PRESSURES IS DIRECTLY PROPORTIONAL TO THE ABOVE TABLE. FOR INSTANCE, AT 1380 kN/m^2 TEST PRESSURE FOR ABOVE NUMBERS DOUBLE.											

NOTES:

1. POUR THRUST BLOCKS AGAINST UNDISTURBED MATERIAL. WHERE TRENCH WALL HAS BEEN DISTURBED, EXCAVATE LOOSE MATERIAL AND EXTEND THRUST BLOCK TO UNDISTURBED MATERIAL. NO JOINTS SHALL BE COVERED WITH CONCRETE.
2. ON BENDS AND TEES, EXTEND THRUST BLOCKS FULL LENGTH OF FITTING.
3. PLACE CONCRETE PATIO BLOCKS IN FRONT OF ALL PLUGS BEFORE POURING THRUST BLOCK. COST INCIDENTAL TO CONCRETE.
4. REQUIREMENTS OF THE ABOVE TABLE PRESUME MINIMUM SOIL BEARING OF 96 kN PER SQUARE METER, AND MAY BE VARIED BY THE ENGINEER TO MEET OTHER CONDITIONS ENCOUNTERED.
5. MEGA-LUG RETAINER GLANDS ARE REQUIRED FOR ALL MECHANICAL JOINTS. THESE GLANDS DO NOT REDUCE THE REQUIREMENTS FOR THRUST RESTRAINT.
6. ALL FITTINGS SHALL BE WRAPPED IN POLYETHYLENE OR BUILDING PAPER PRIOR TO INSTALLATION OF CONCRETE RESTRAINT.
7. THREADED ROD SHALL BE ANSI A242 FY50 PIPE RESTRAINT NUTS TO MATCH AWWA C111. THREADED RODS AND NUTS TO BE FIELD COATED WITH BITUMINOUS PAINT.
8. THRUST RESTRAINT IS REQUIRED FOR ALL TEES, BENDS, REDUCERS, CAPS, PLUGS, OR CROSSES.
9. INSTALL LIFT HOOKS INTO THRUST BLOCKS AT END CAPS AND PLUGS. COST INCIDENTAL TO CONCRETE.

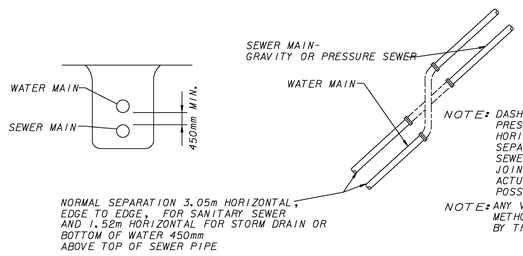

NOTE: DASHED PIPE SECTIONS SHALL BE PRESSURE TYPE PIPE UNTIL 10' HORIZONTAL OR 450mm VERTICAL SEPARATION WITH WATER MAIN ABOVE SEWER IS MAINTAINED. PIPE JOINTS SHALL BE AS FAR FROM ACTUAL CROSSING POINT AS POSSIBLE.

NOTE: ANY VARIATION FROM THIS METHOD MUST BE APPROVED BY THE ENGINEER

CROSSING DETAIL

NOT TO SCALE

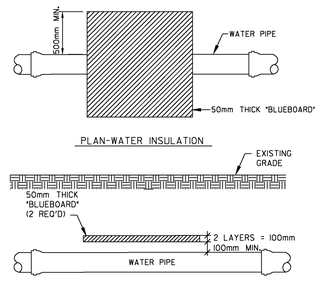

RIGID BOARD INSULATION DETAIL

NOT TO SCALE

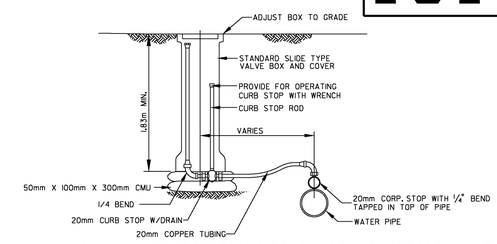

TYPICAL INSTALLATION-TRAVEL WAY FOR AIR VENT OR CHLORINATION INJECTION

NOT TO SCALE

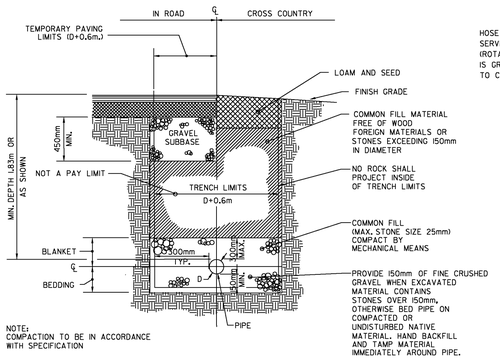

NOTE:
COMPACTION TO BE IN ACCORDANCE WITH SPECIFICATION

TYPICAL DUCTILE IRON TRENCH DETAIL

NOT TO SCALE

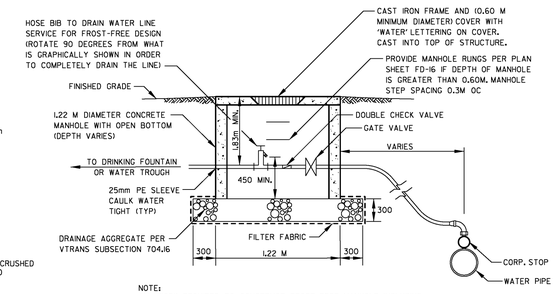

NOTE:
ALL WORK REQUIRED TO CONSTRUCT FROST-FREE MANHOLE INCLUDING EXCAVATION, BACKFILL, MANHOLE, FRAME, COVER, HOSE BIB, GATE VALVE, DOUBLE CHECK VALVE, PIPE, DRAINAGE AGGREGATE AND ALL OTHER INCIDENTALS SHALL BE PAID UNDER ITEM 900.620 SPECIAL PROVISION (FROST-FREE MANHOLE).

MANHOLE FOR FROST-FREE WATER SERVICE

NOT TO SCALE

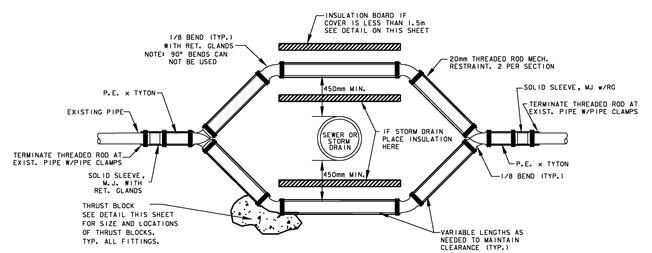

SECTION - WATER MAIN RELOCATION DETAIL

NOT TO SCALE

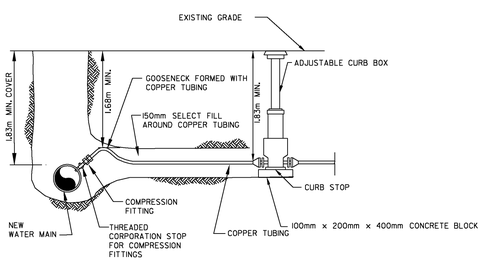

TYPICAL SERVICE CONNECTION DETAIL

NOT TO SCALE

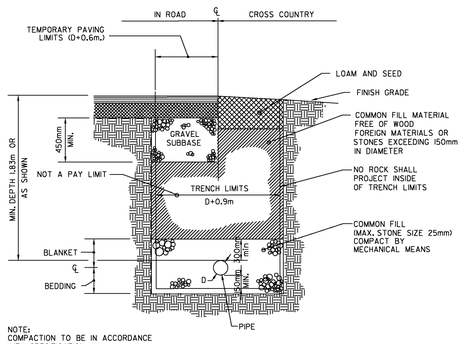

NOTE:
COMPACTION TO BE IN ACCORDANCE WITH SPECIFICATION

DRAIN TRENCH DETAIL

NOT TO SCALE

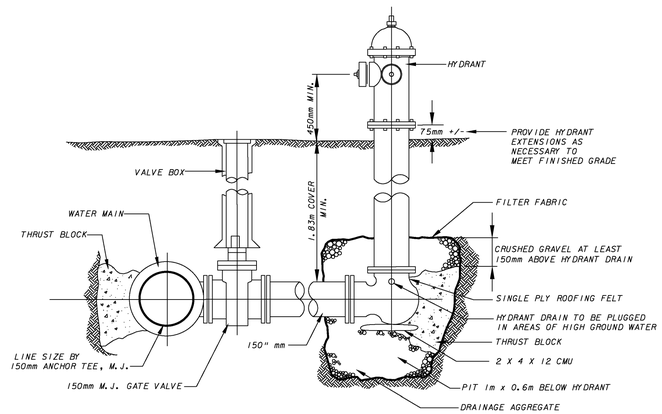

HYDRANT ASSEMBLY DETAIL

NOT TO SCALE

REPLACEMENT SHEETS ISSUED 10/5/11

PROJECT NAME: DANVILLE
PROJECT NUMBER: F EGC 028-3(32)

FILE NAME: ...\Utilities\PlotFiles\FD-13.ptf
DESIGN SUPERVISOR: TOM NESBITT
DESIGNED BY: STANTEC
FIRE DISTRICT WATER PLAN FD-13

PLOT DATE: 10/4/2011
DRAWN BY: STANTEC
CHECKED BY: STANTEC
SHEET 302 OF 306

Stantec

10/4/2011 1:21:25 PM V:\1953\active\195300033.002\Utilities\PlotFiles\FD-13.ptf

PRESSURE REDUCING VAULT

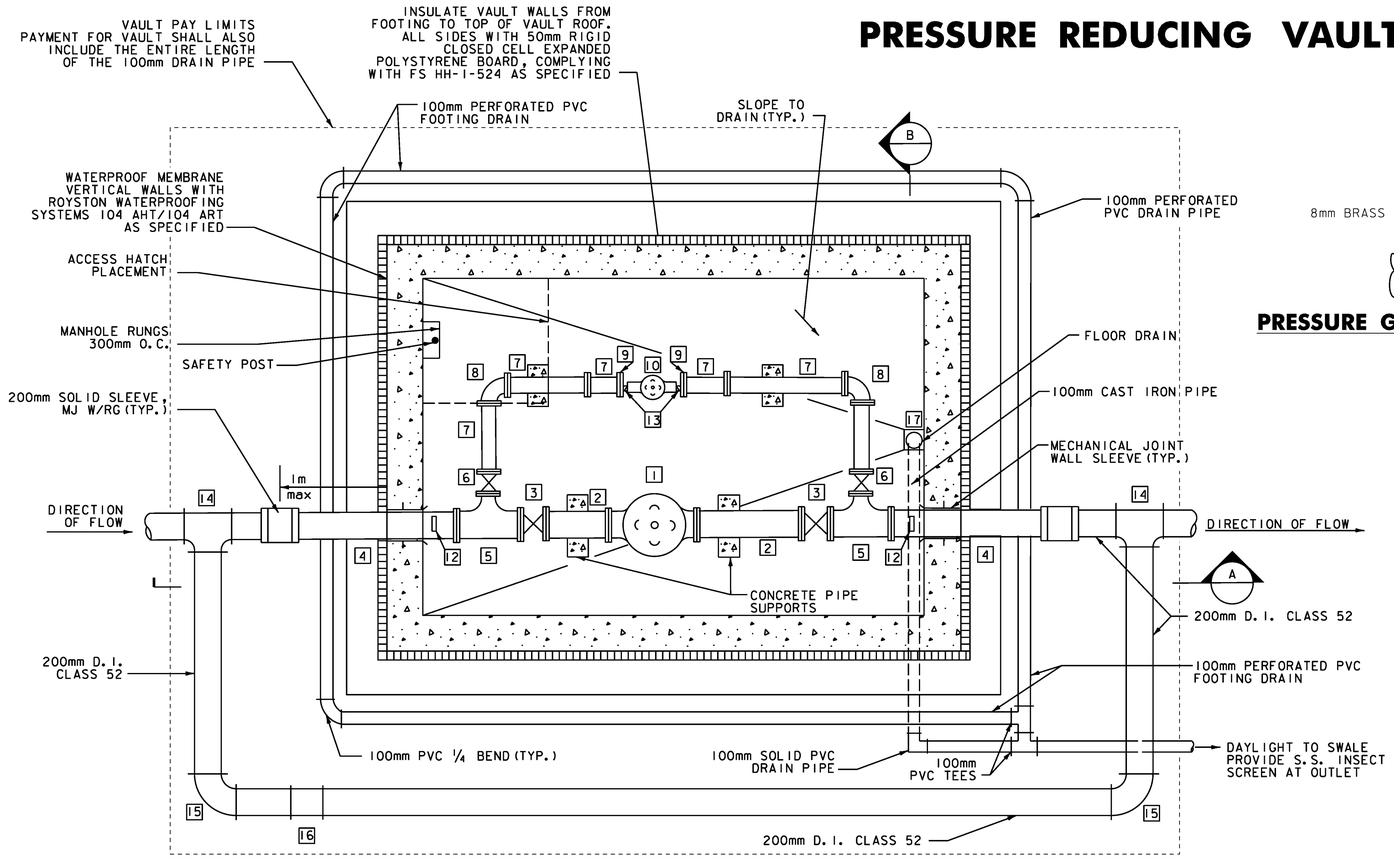

PLAN
NOT TO SCALE

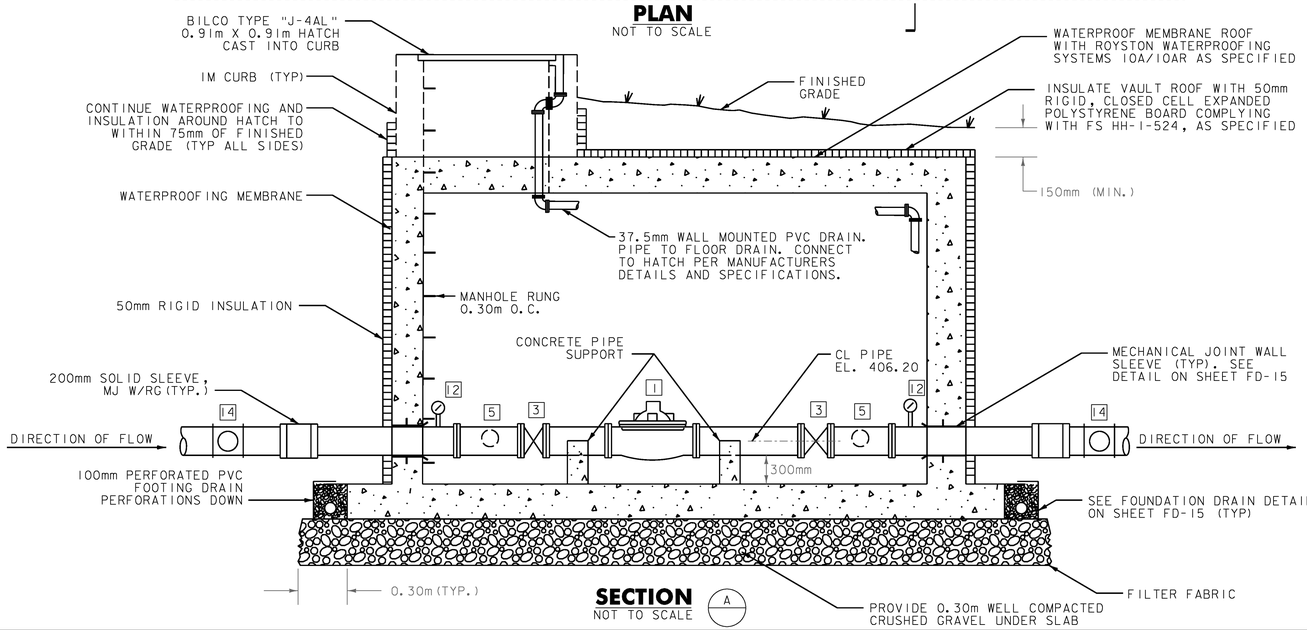

SECTION
NOT TO SCALE (A)

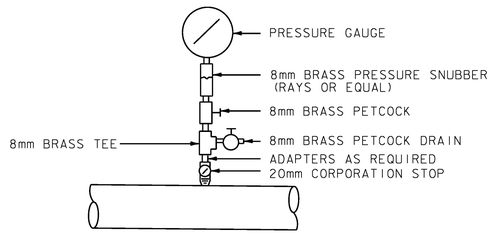

PRESSURE GAUGE AND SNUBBER DETAIL
NOT TO SCALE

LEGEND

1	200mm PRESSURE REDUCING VALVE
2	200mm SPOOL PIECE, FLG
3	200mm GATE VALVE W/ HANDWHEEL, FLG
4	200mm SPOOL PIECE, FLG & PE
5	200mm X 100mm TEE, FLG
6	100mm GATE VALVE W/ HANDWHEEL, FLG
7	100mm SPOOL PIECE, FLG
8	100mm 1/4BEND, FLG
9	100mm + 32mm REDUCING FLANGE
10	32mm PRESSURE REDUCING VALVE
11	100mm SPOOL PIECE, LENGTH AS REQUIRED
12	PRESSURE GAUGE ASSEMBLY 0-200 PSI
13	ADAPTER AS REQUIRED
14	200mm X 200mm TEE, MJ W/RG
15	200mm 1/4BEND, MJ W/RG
16	200mm GATE VALVE, MJ W/RG AND BOX
17	FLOOR DRAIN, TYLER PIPE DRAIN, SERIES 304-TYH OR EQUAL

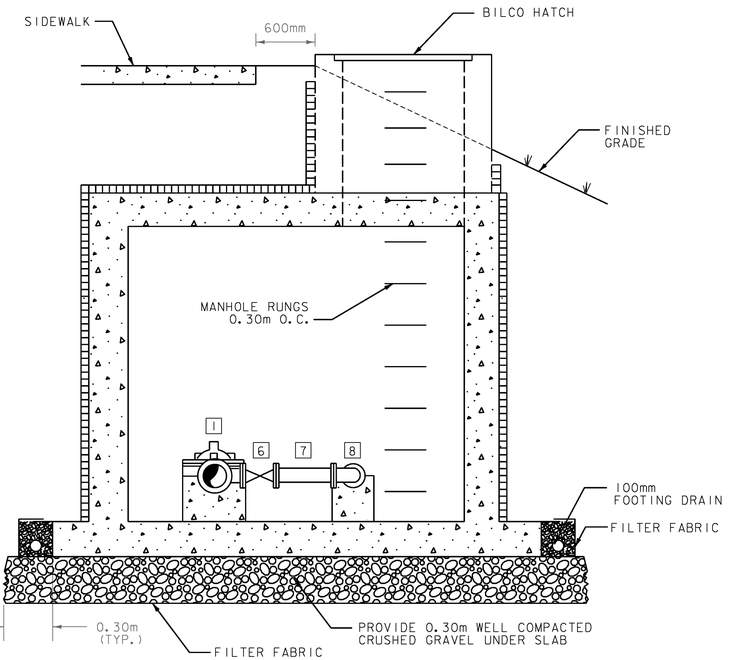

SECTION
NOT TO SCALE (B)

REPLACEMENT SHEETS ISSUED 10/5/11

PROJECT NAME:	DANVILLE
PROJECT NUMBER:	F EGC 028-3(32)
FILE NAME: ...\Utilities\PlotFiles\FD-14.ptf	PLOT DATE: 10/4/2011
DESIGN SUPERVISOR: TOM NESBITT	DRAWN BY: STANTEC
DESIGNED BY: STANTEC	CHECKED BY: STANTEC
FIRE DISTRICT WATER PLAN FD-14	SHEET 303 OF 306

Stantec

10/4/2011 12:12:26 PM V:\1853\active\053300333.0092\Utilities\PlotFiles\FD-14.ptf

PRESSURE REDUCING VAULT

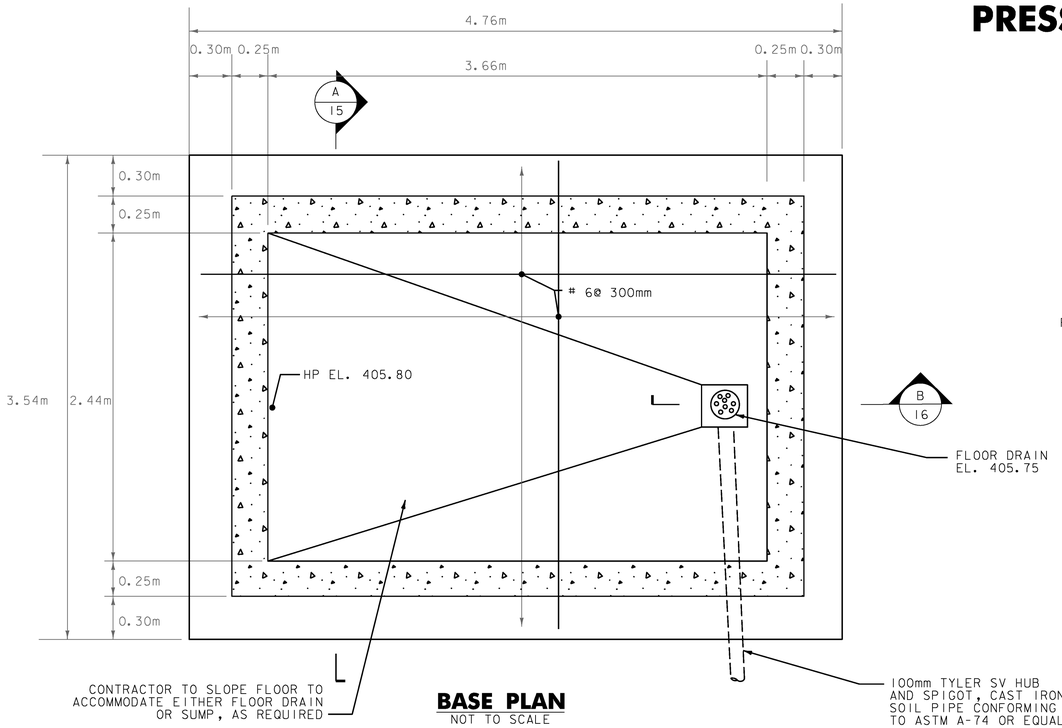

BASE PLAN
NOT TO SCALE

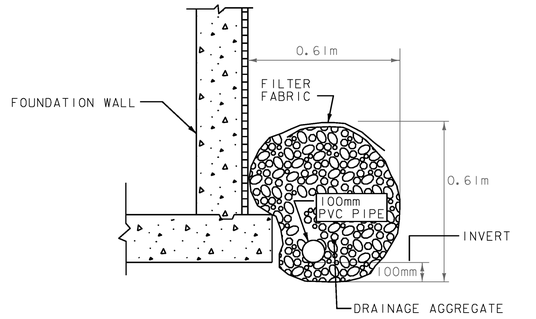

FOUNDATION DRAIN DETAIL
NOT TO SCALE

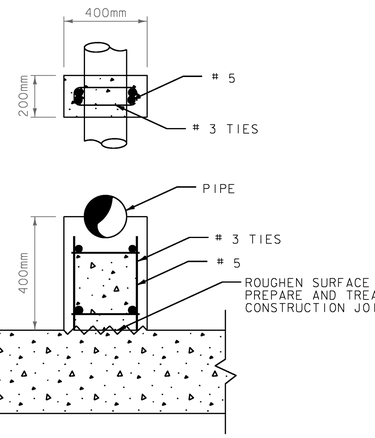

TYPICAL PIPE SUPPORT DETAIL
NOT TO SCALE

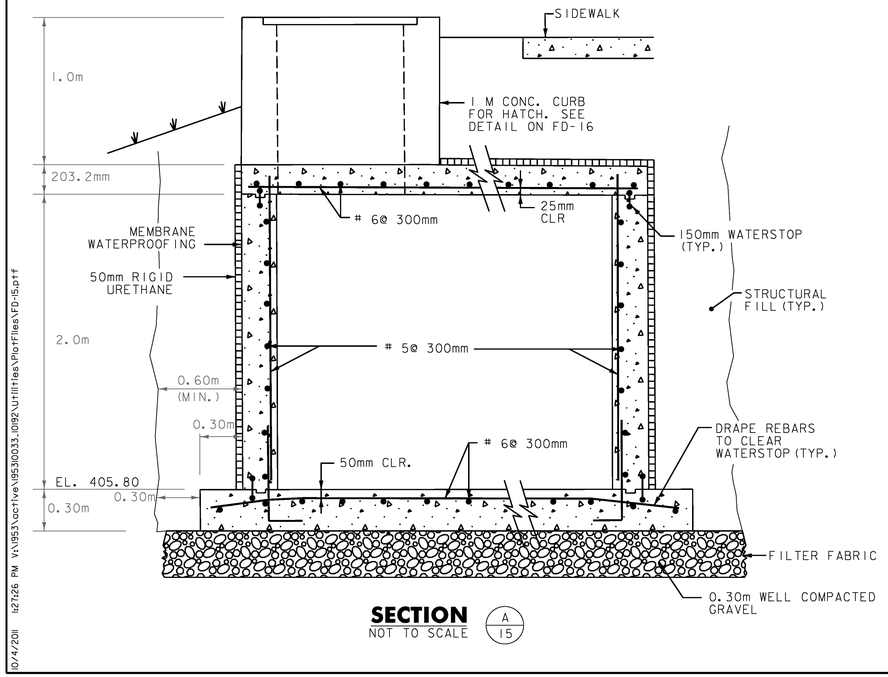

SECTION (A/15)
NOT TO SCALE

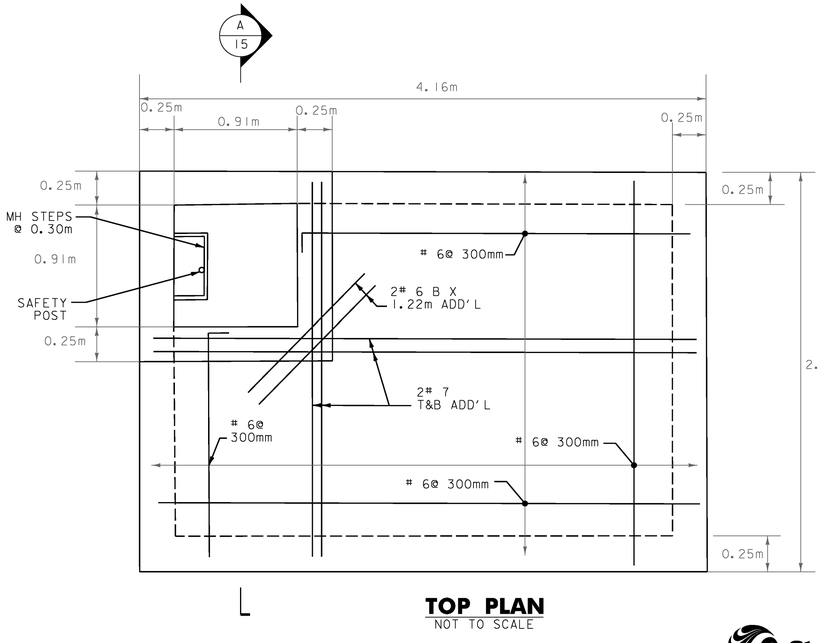

TOP PLAN
NOT TO SCALE

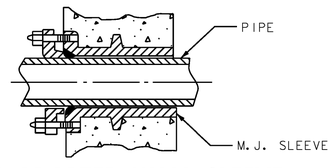

M.J. ADAPTER WALL SLEEVE
(80mm TO 600mm PIPE)
NOT TO SCALE

REPLACEMENT SHEETS ISSUED 10/5/11

Stantec

PROJECT NAME: DANVILLE	
PROJECT NUMBER: F EGC 028-3(32)	
FILE NAME: ...\Utilities\PlotFiles\FD-15.ptf	PLOT DATE: 10/4/2011
DESIGN SUPERVISOR: TOM NESBITT	DRAWN BY: STANTEC
DESIGNED BY: STANTEC	CHECKED BY: STANTEC
FIRE DISTRICT WATER PLAN FD-15	SHEET 304 OF 306

10/4/2011 12:12:26 PM V:\0953\active\95310033.0092\Utilities\PlotFiles\FD-15.ptf

PRESSURE REDUCING VAULT DETAIL

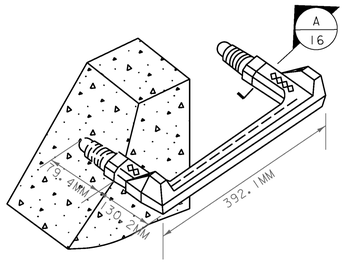

MANHOLE STEP DETAIL
NOT TO SCALE

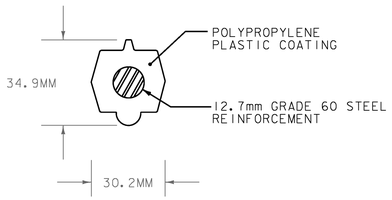

SECTION (A 16)
NOT TO SCALE

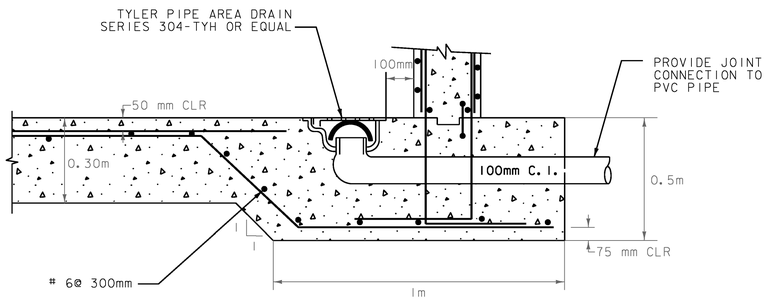

SECTION (B 16)
NOT TO SCALE

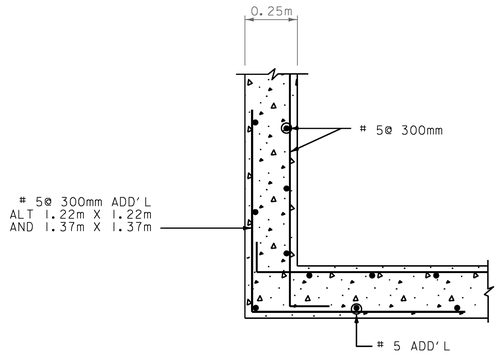

TYPICAL CORNER REINF. DETAIL
SCALE 1:20

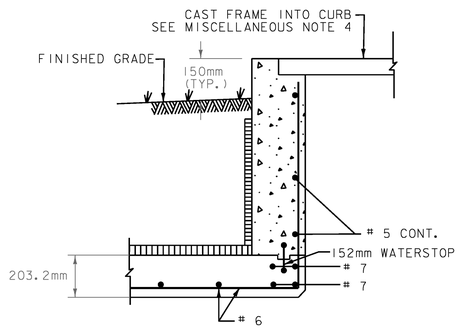

HATCH CONCRETE CURB DETAIL
NOT TO SCALE

FOUNDATIONS

1. NO CONCRETE SHALL BE PLACED IN WATER OR ON FROZEN GROUND.
2. ALL FINISHED EXCAVATIONS SHALL BE INSPECTED AND APPROVED BY THE ENGINEER OR THE ENGINEERS DESIGNATE BEFORE ANY CONCRETE IS PLACED.
3. ALL BACKFILL UNDER OR ADJACENT TO ANY PORTION OF STRUCTURE SHALL BE COMPACTED IN 8" LIFTS (SEE SPECIFICATIONS).

CONCRETE

1. ALL CONCRETE WORK SHALL CONFORM TO THE REQUIREMENTS OF THE SPECIFICATIONS, THE LATEST EDITION OF THE ACI BUILDING CODE (ACI 318), TO ACI 301-81 SPECIFICATIONS FOR STRUCTURAL CONCRETE FOR BUILDING AND TO THE NATIONAL BUILDING CODE. IN CASE OF CONFLICT, THE MORE STRINGENT REQUIREMENTS SHALL GOVERN.
2. ALL CONCRETE SHALL BE READY-MIXED IN ACCORDANCE WITH ASTM C94.
3. AT LEAST 48 HOURS SHALL ELAPSE BEFORE DEPOSITING NEW CONCRETE AGAINST PREVIOUSLY POURED CONCRETE.
4. ALL CONCRETE SHALL ATTAIN A MINIMUM COMPRESSIVE STRENGTH OF 4000 PSI AT 28 DAYS, UNLESS OTHERWISE SPECIFIED.
5. ALL WATERSTOPS SHALL BE 152MM.

REINFORCING

1. ALL REINFORCING BAR DETAILS SHALL CONFORM TO THE LATEST ACI CODE AND DETAILING MANUAL, EXCEPT AS OTHERWISE SPECIFIED.
2. ALL REINFORCING BARS SHALL CONFORM TO ASTM A615 (FY = 60,000 PSI MIN.).
3. SCHEDULE WITH THE FABRICATION DRAWINGS ALL NECESSARY ACCESSORIES TO HOLD REINFORCING SECURELY IN POSITION. MINIMUM REQUIREMENTS SHALL BE: HIGH CHAIRS 1.22M ON CENTERS: SLAB BOLSTERS 1.07M ON CENTERS: SUPPORT BARS FOR HIGH CHAIRS #5.
4. ALL BARS, EXCEPT AS OTHERWISE NOTED, SHALL BE CONTINUOUS AND SHALL BE RUN CONTINUOUSLY AROUND CORNERS, LAPPED AT NECESSARY SPLICES, AND HOOKED AT DISCONTINUOUS ENDS. LAPS SHALL BE 36 BAR DIAMETER MINIMUM, UNLESS OTHERWISE NOTED.
5. THE CONCRETE PROTECTIVE COVERING FOR MAIN REINFORCEMENT SHALL BE 75MM, UNLESS SHOWN OTHERWISE.

A. FOOTING BOTTOMS 76.2MM
B. COLUMNS, BEAMS AND FORMED SURFACES IN DIRECT CONTACT GENERAL NOTES WITH SOIL OR EXPOSED TO THE WEATHER (EXCEPT SLABS) 50.8MM
C. SLABS ON GRADE 38.1MM
D. INTERIOR FACES OF WALLS AND SLABS EXPOSED TO WEATHER 25.4MM
E. INTERIOR SLABS 19.1MM

6. ALL CONCRETE, UNLESS SPECIFICALLY NOTED TO BE PLAIN CONCRETE, SHALL BE REINFORCED.
7. ALL REINFORCING SHALL BE INSPECTED AND APPROVED BY THE ENGINEER OR THE ENGINEERS DESIGNATE BEFORE CONCRETE IS PLACED.

LIST OF ABBREVIATIONS

AL	ALUMINUM	HP	HIGH POINT	T	TOP
CJ	CONSTRUCTION JOINT	LP	LOW POINT	TOC	TOP OF CONCRETE
EF	EACH FACE	NTS	NOT TO SCALE	TOS	TOP OF SLAB, TOP OF STEEL
EL	ELEVATION	OCON	CENTER	TOW	TOP OF WALL
EW	EACH WAY	SOG	SLAB ON GRADE	TYP	TYPICAL
				WS	WATERSTOP

MISCELLANEOUS

1. ALL EQUIPMENT PENETRATIONS TO BE VERIFIED BY CONTRACTOR.
2. THE VAULT FLOOR SHALL RECEIVE A BROOM FINISH AND A LIQUID CHEMICAL HARDENER-SEALANT.
3. DO NOT SCALE DRAWINGS.
4. INSIDE WALLS AND CEILING SHALL RECEIVED TWO COATS OF WHITE CEMENTITIOUS COATING, THOROSEAL OR EQUAL.
5. HATCH SHALL BE 0.91M BY 0.91M. THE HATCH SHALL BE AN ALUMINUM HATCH WITH A PADLOCK AND KEY OF THE TOWN STANDARD TYPE.
6. TOP MANHOLE STEP TO BE WITHIN 152.4MM FROM TOP OF CONCRETE CURB, AND THE LOWEST STEP WILL BE WITHIN 152.4MM OF FLOOR SLAB. A SAFETY POST SHALL BE PROVIDED.
7. ALL WORK AND MATERIALS SHOWN AND NOTED TO BE PAID UNDER ITEM 900.645 SPECIAL PROVISION (PRESSURE REDUCING VAULT)

REPLACEMENT SHEETS ISSUED 10/5/11

PROJECT NAME:	DANVILLE
PROJECT NUMBER:	F EGC 028-3(32)

FILE NAME: ...\Utilities\PlotFiles\FD-16.ptf	PLOT DATE: 10/4/2011
DESIGN SUPERVISOR: TOM NESBITT	DRAWN BY: STANTEC
DESIGNED BY: STANTEC	CHECKED BY: STANTEC
FIRE DISTRICT WATER PLAN FD-16	SHEET 305 OF 306

Stantec

10/4/2011 12:12:7 PM V:\0953\active\95300033.0092\Utilities\PlotFiles\FD-16.ptf

HOLE #	OFFSET	STATIC LEVEL (M)	SOILS	AUGER REFUSAL (M)	DEPTH (M)
B-86	-	-	0-2.1m SAND WITH SILT, 2.1-3.0m GLACIAL TILL W/ LARGE BOULDERS		3.0
B-87	-	-	0-2.9m BROWN SAND WITH SILT WITH GRAVEL	2.9	2.9
B-88	-	-	0-0.9m SAND WITH SILT, 0.9-1.8m GLACIAL TILL	1.8	1.8
B-89	-	-	0-3m SAND AND GRAVEL		3
B-90	-	-	0-0.6m SAND WITH SILT AND GRAVEL, 0.6-3m GLACIAL TILL		3
B-91	-	-	0-0.9m BROWN SAND WITH SILT, 0.9-1.8m GLACIAL TILL	1.8	1.8
B-92	-	-	0-0.5m BROWN SAND WITH SILT	.5	.5
B-93	-	-	0-0.5m BROWN SAND WITH SILT	.5	.5
B-94	-	-	0-0.8m BROWN SAND WITH SILT, 0.8-1.7m GLACIAL TILL	1.7	1.7
B-95	-	-	0-0.6m SAND WITH SILT, 0.6-1.8m GLACIAL TILL	1.8	1.8
B-96	-	-	0-0.6m SAND WITH SILT, 0.6-1.5m GLACIAL TILL	1.7	1.7
B-97	-	-	0-3m SAND WITH SILT AND GRAVEL		3
B-98	-	-	0-0.9m SAND WITH SILT AND GRAVEL, 0.9-2.1m GLACIAL TILL	2.1	2.1
B-99	-	-	0-0.5m SAND WITH SILT AND GRAVEL, 0.5-1.2m GLACIAL TILL	1.2	1.2
B-100	-	-	0-0.5m SAND WITH SILT AND GRAVEL, 0.5-1.2m GLACIAL TILL	1.2	1.2
B-101	-	-	0-3m SAND WITH SILT AND GRAVEL		3
B-102	-	-	0-2.1m SAND WITH SILT AND GRAVEL		2.1
B-103	-	-	0-1.2m SAND WITH SILT	1.2	1.2
B-104	-	1.22	0-1.5m SAND WITH SILT, 1.5-2.4m GLACIAL TILL	2.4	2.4
B-105	-	-	0-1.2m SAND WITH SILT	1.2	1.2
B-106	-	-	0-1.8m SAND WITH SILT	1.8	1.8
B-107	-	1.22	0-1.8m SAND WITH SILT	1.8	1.8
B-108	-	-	0-1.2m SAND WITH SILT	1.2	1.2
P-1	-	-	0-1.5m SILTY SAND, 1.5m-2.4m SILTY SAND WITH STONES		2.4
P-2	-	-	0-1.2m SILTY SAND, 1.2-2.4m SILTY SAND WITH STONES		2.4
P-3	-	-	0-1.5m SILTY SAND, 1.5-2.4m SILTY SAND WITH STONES		2.4
P-4	-	-	0-2.1m SILTY SAND AND STONES, 2.1-2.4m TILL		2.4
P-5	-	-	0-1.8m SILTY SAND AND STONES, 1.8-2.4m TILL		2.4
P-6	-	-	0-2.4m SILTY SAND WITH STONES		2.4
P-7	-	-	0-2.4m SILTY SAND WITH STONES		2.4
P-8	-	-	0-2.4m SILTY SAND WITH STONES		2.4
P-9	-	-	0-2.4m SILTY SAND WITH STONES		2.4
P-10	-	-	0-2.4m SILTY SAND WITH STONES		2.4
P-11	-	-	0-2.4m SILTY SAND WITH STONES		2.4
P-12	-	-	0-2.4m SILTY SAND WITH STONES		2.4
P-13	-	-	0-2.4m SILTY SAND WITH STONES		2.4
P-14	-	-	0-2.4m SILTY SAND WITH STONES		2.4
P-15	-	-	0-2.4m SILTY SAND WITH STONES		2.4
P-16	-	-	0-2.4m SILTY SAND WITH STONES		2.4
P-17	-	-	0-0.9m SAND WITH STONES, 0.9-1.5m LARGE STONES, 1.5-2.4m SILTY SAND		2.4
P-18	-	-	0-1.2m SAND WITH STONES, 1.2-2.4m LARGE STONES AND SILTY SAND		2.4
P-19	-	-	0-1.5m SAND WITH STONES, 1.5-2.4m LARGE STONES AND SILTY SAND		2.4
P-19A	-	-	0-1.5m SAND WITH STONES, 1.5-2.1m WEATHERED ROCK	2.1	2.1
P-19B	-	-	0-2.4m SILTY SAND WITH STONES		2.4
P-19C	-	-	0-1.8m SAND AND STONES	1.8	1.8
P-20	-	-	0-0.9m LG. STONES, 0.9-1.2m SAND, 1.2m REFUSAL. DRILLED INTO WEATHERED ROCK 1.2m	1.2+0.6	1.2

HOLE #	OFFSET	STATIC LEVEL (M)	SOILS	AUGER REFUSAL (M)	DEPTH (M)
P-20A	-	-	0-1m SAND AND STONES	1	1
P-21	-	-	0-0.9m SAND AND STONES	0.9	0.9
P-22	-	-	0-0.7m SAND AND STONES	0.7	0.7
P-23	-	-	0-1.2m SAND AND STONES	1.2	1.2
P-24	-	-	0-0.5m SAND AND GRAVEL	0.5	0.5
P-24A	-	-	0-2.0m SAND WITH SOME STONES	2.0	2.0
P-25	-	-	0-1.1m SAND WITH SOME STONES	1.1	1.1
P-26	-	-	0-0.9m SAND WITH SOME STONES	0.9	0.9
P-27	-	-	0-0.8m SAND WITH SOME STONES	0.8	0.8
P-28	-	-	0-1.2m BROWN SAND AND STONES, TILL	1.2	1.2
P-29	-	-	0-1.1m BROWN SAND AND STONES, TILL	1.1	1.1
P-30	-	-	0-0.9m BROWN SAND AND STONES, TILL	0.9	0.9
P-31	-	-	0-1.4m BROWN SAND AND STONES, TILL	1.4	1.4
P-32	-	-	0-1.1m BROWN SAND AND STONES, TILL	1.1	1.1
P-33	-	-	0-1.1m BROWN SAND AND STONES, TILL	1.1	1.1
P-34	-	-	0-1.8m BROWN SAND AND STONES, TILL	1.8	1.8
P-35	-	-	0-1.4m BROWN SAND AND STONES, TILL	1.4	1.4
P-36	-	-	0-2.4m SILTY SAND AND STONES		2.4
P-37	-	-	0-2.4m SILTY SAND AND STONES WITH SOME PEAT		2.4
P-38	-	-	0-2.4m SILTY SAND AND STONES WITH SOME PEAT		2.4
P-39	-	-	0-2.0m SILTY SAND AND STONES, TILL	2.0	2.0
P-39A	-	-	0-2.0m SILTY SAND AND STONES, TILL, WITH SOME PEAT	2.0	2.0
P-39B	-	-	0-1.7m SILTY SAND AND STONES, TILL	1.7	1.7
P-39C	-	-	0-0.9m SILTY SAND AND STONES	0.9	0.9
P-39D	-	-	0-2.1m BROWN SILTY SAND AND TILL	2.1	2.1
P-40	-	-	0-1.7m BROWN SILTY SAND AND TILL	1.7	1.7
P-41	-	-	0-1.7m BROWN SILTY SAND WITH TILL	1.7	1.7
R-1	-	-	1.1m REBAR	1.1	1.1
R-2	-	-	1.2m REBAR	1.2	1.2
R-3	-	-	1.1m REBAR	1.1	1.1
R-4	-	-	1.5m REBAR	1.5	1.5
R-5	-	-	1.1m REBAR	1.1	1.1
R-6	-	-	1m REBAR	1	1
R-7	-	-	1.7m REBAR	1.7	1.7
R-8	-	-	1.3m REBAR	1.3	1.3
R-9	-	-	0.3m REBAR	0.3	0.3
R-10	-	-	0.5m REBAR	0.5	0.5
R-11	-	-	1.1m REBAR	1.1	1.1
R-12	-	-	0.5m REBAR	0.5	0.5
R-13	-	-	1m REBAR	1	1
R-14	-	-	0.8m REBAR	0.8	0.8
R-15	-	-	0.5m REBAR	0.5	0.5
R-16	-	-	0.9m REBAR	0.9	0.9
R-17	-	-	0.4m REBAR	0.4	0.4
R-18	-	-	1.1m REBAR	1.1	1.1

NOTE:

1. THIS DATA ON SUBSURFACE CONDITIONS HAS BEEN FURNISHED ONLY FOR THE BIDDER'S INFORMATION AND CONVENIENCE WITHOUT ANY WARRANTY OR GUARANTEE, EXPRESSED OR IMPLIED, THAT THE SUBSURFACE CONDITIONS ACTUALLY ENCOUNTERED WILL BE THE SAME AS SHOWN ON THE BORING LOGS. BORINGS ARE NOT INTENDED AS REPRESENTATIONS OR WARRANTIES AND IT IS EXPRESSLY UNDERSTOOD THAT NEITHER THE AGENCY NOR THE ENGINEER WILL BE RESPONSIBLE FOR THE ACCURACY THEREOF OR FOR ANY INTERPRETATIONS OR CONCLUSIONS DRAWN THERE FROM BY THE BIDDER.

2. THE BIDDER SHALL BE ESPECIALLY COGNIZANT OF THE GROUNDWATER OBSERVATIONS SHOWN ON THE SOIL BORING LOGS OR ESTIMATED IN ANALYSIS INFORMATION, IN THAT THE MEASUREMENT WAS GENERALLY TAKEN SEVERAL HOURS AFTER THE SOIL BORING WAS COMPLETED AND MAY NOT INDICATE THE TRUE GROUNDWATER ELEVATION AT THAT TIME, OR AT THE TIME OF ACTUAL CONSTRUCTION. GROUNDWATER DATA IS PROVIDED WITH NO GUARANTEE BEING EXPRESSED OR IMPLIED BY THE AGENCY, ENGINEER, OR SOIL BORING CONTRACTOR AS TO ITS MEANING WITH RESPECT TO MOISTURE CONDITIONS IN THE SOIL.

3. BORING INFORMATION IS OFFERED IN GOOD FAITH SOLELY FOR THE PURPOSE OF PROVIDING THE BIDDER ALL PERTINENT INFORMATION AVAILABLE TO THE AGENCY.

REPLACEMENT SHEETS ISSUED 10/5/11

Stantec

PROJECT NAME: DANVILLE
PROJECT NUMBER: F EGC 028-3(32)

FILE NAME: ...\Utilities\PlotFiles\FD-17.ptf
DESIGN SUPERVISOR: TOM NESBITT
DESIGNED BY: STANTEC
FIRE DISTRICT WATER PLAN FD-17

PLOT DATE: 10/4/2011
DRAWN BY: STANTEC
CHECKED BY: STANTEC
SHEET 306 OF 306

10/4/2011 12:7:27 PM V:\0953\active\95330033.002\Utilities\PlotFiles\FD-17.ptf

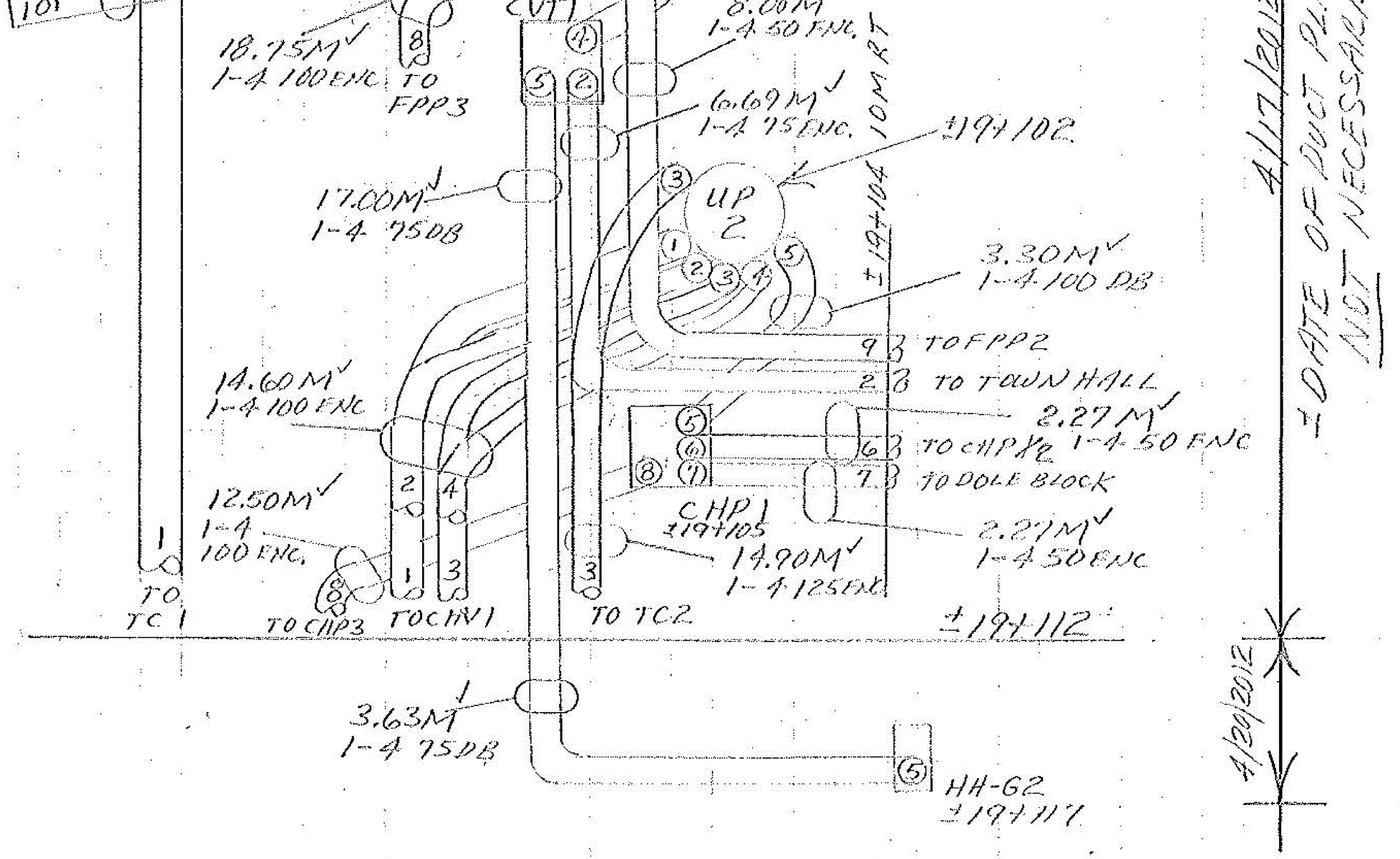

NO SCALE

SCHEMATIC FOR DETAILING PAY ITEMS

DUCT LOCATIONS ARE NOT NECESSARILY RELATIVE TO EACH OTHER.

H.W. NORTON
4/20/2012

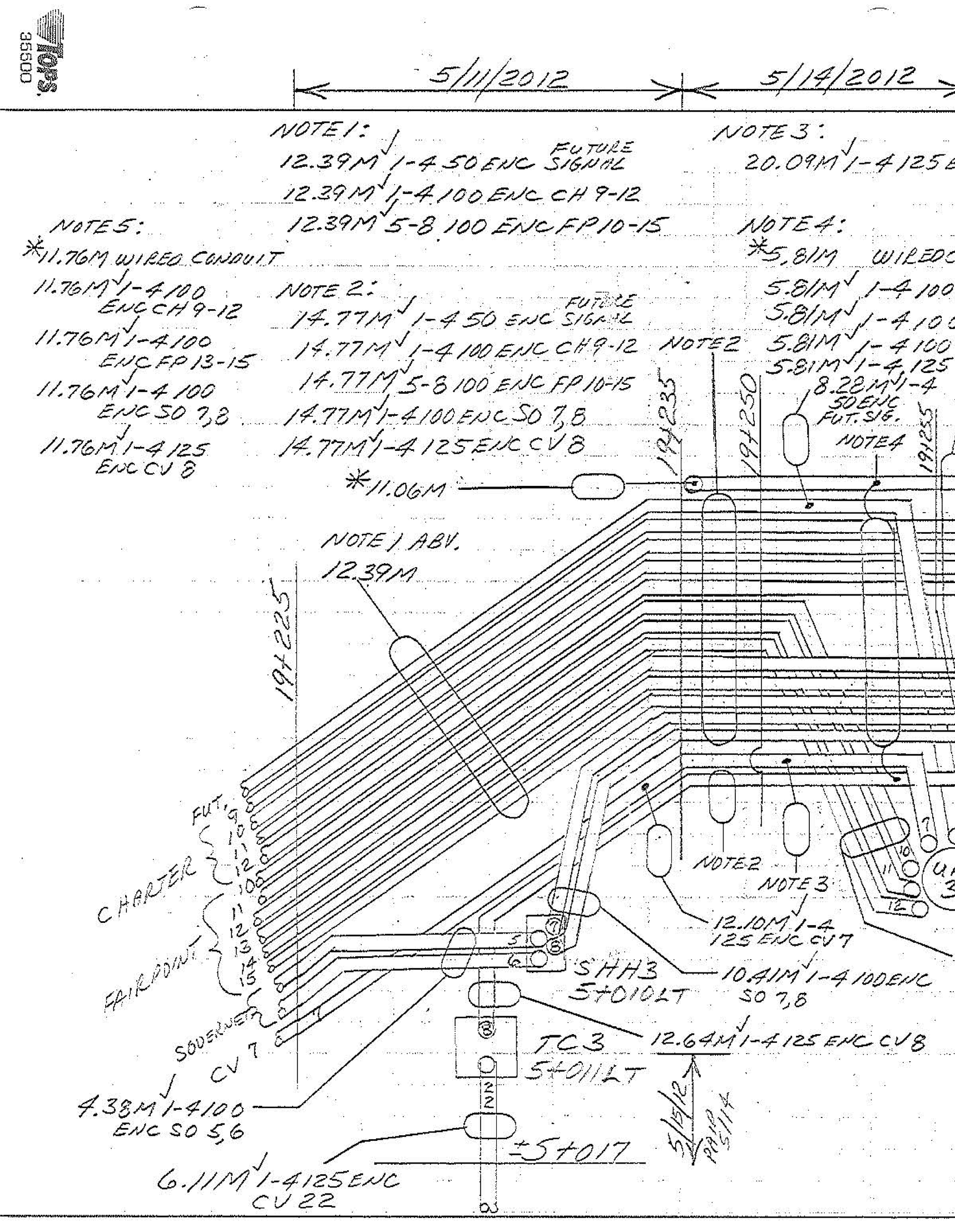

5/11/2012
5/14/2012
NOTE 1:
12.39M 1-4 50 ENC FUTURE SIGNAL
12.39M 1-4 100 ENC CH 9-12
12.39M 5-8 100 ENC FP 10-15
NOTE 3:
20.09M 1-4 125
NOTE 5:
*11.76M WIRED CONDUIT
11.76M 1-4 100 ENC CH 9-12
11.76M 1-4 100 ENC FP 13-15
11.76M 1-4 100 ENC SO 7,8
11.76M 1-4 125 ENC CV 8
NOTE 2:
14.77M 1-4 50 ENC FUTURE SIGNAL
14.77M 1-4 100 ENC CH 9-12
14.77M 5-8 100 ENC FP 10-15
14.77M 1-4 100 ENC SO 7,8
14.77M 1-4 125 ENC CV 8
NOTE 4:
*5.81M WIRED
5.81M 1-4 100
5.81M 1-4 10
5.81M 1-4 100
5.81M 1-4 125
8.28M 1-4 50 ENC FUT. SIG.
NOTE 2
NOTE 4
19+235
19+250
19+255
*11.06M
NOTE 1 ABV.
12.39M
19+225
FUT.
CHARTER
FAIRPOINT
SOVERNET
CV 7
NOTE 2
NOTE 3
12.10M 1-4 125 ENC CV 7
SHH3
5+010LT
10.41M 1-4 100 ENC SO 7,8
TC3
5+011LT
12.64M 1-4 125 ENC CV 8
4.38M 1-4 100 ENC SO 5,6
±5+017
6.11M 1-4 125 ENC CV 22
5/15/12
PAID 5/14

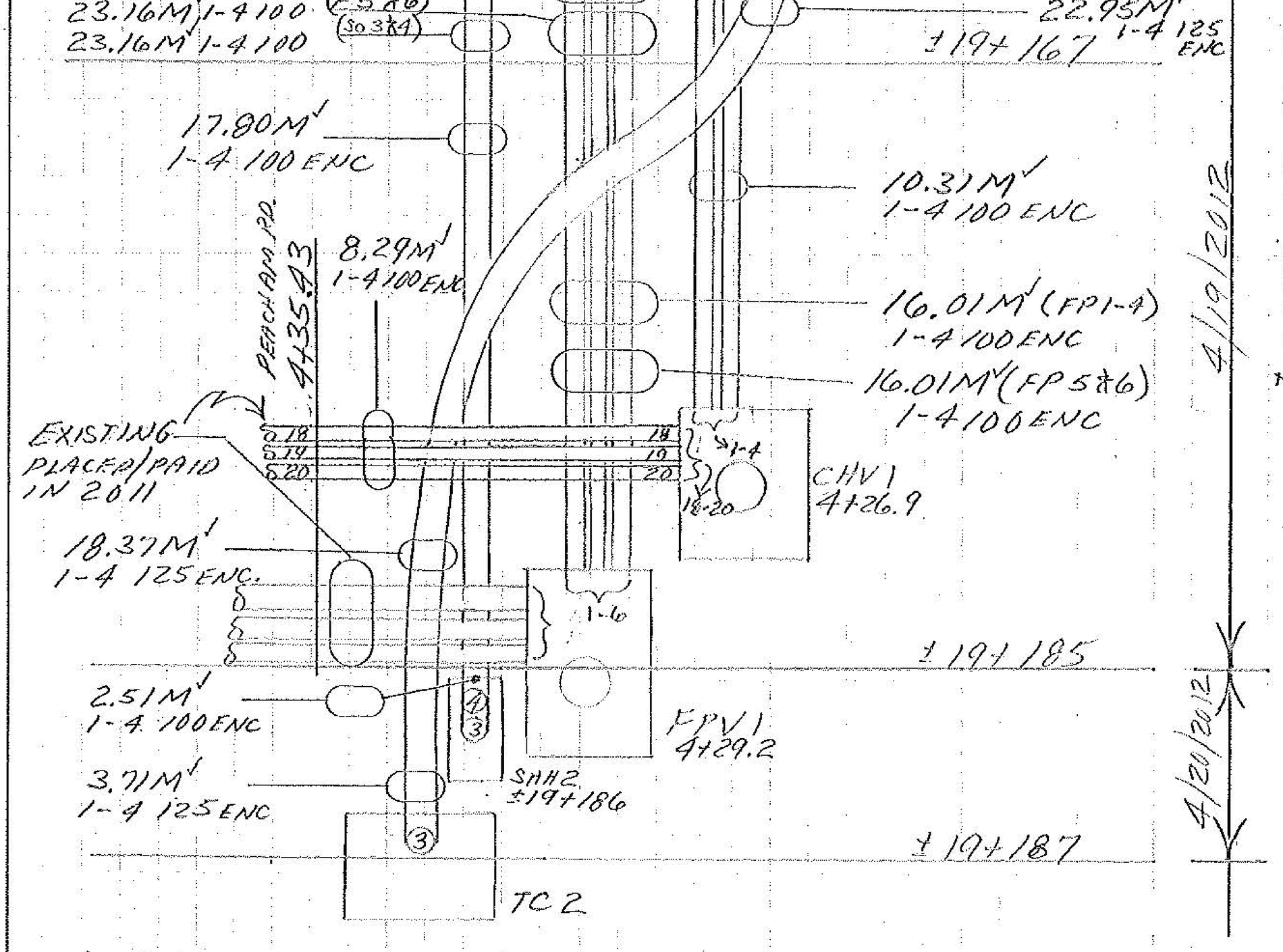

NO SCALE SCHEMATIC FOR DETAILING ITEMS

DUCT LOCATIONS ARE NOT NECESSARILY RELATIVE TO EACH OTHER

H.W. NORTON
4/20/2012, 4/25

TOPS.
35500

35500

NOTE 5
19.95M ✓ 1-4 50 DB CH16
19.95M ✓ 1-4 50 DB FP21 ✓
19.95M ✓ 1-4 75 DB CV14

NOTE 1
17.36M ✓ 1-4 125 ENC CV11
17.36M ✓ 1-4 75 ENC CV12
17.36M ✓ 1-4 75 ENC CV14,15,16,29
17.36M ✓ 1-4 50 ENC FP20,21,22
17.36M ✓ 1-4 50 ENC CH15,16,17

NOT

A-A

33.95M ✓
1-4 75 ENC

4/27/2012

PARK GAZEBO

NOTE 3
59.67M 1-4 125 ENC CV11
59.67M ✓ 1-4 75 ENC CV12

14.54M
1-4 75 DB

✓ 1-4 75 DB CV16
✓ 1-4 50 DB FP20
✓ 1-4 50 DB CH15

6.55M ✓ 1-4 75 DB CV16
6.55M ✓ 1-4 50 DB FP20
6.55M ✓ 1-4 50 DB CH15

NOTE 5
19.95M

20.11M
NOTE 4

5.15M

84 PARK ST.

9.05 ✓
~~5.35M~~ ✓
1-4 50 ENC

10.45
1-4 50

11.75M ✓
1-4 75 DB

9.62M ✓
1-4 50 ENC

8.78M ✓
1-4 50 DB

±2+081
±12M RT

NOTE 6
14.40M

79 PARK ST.

9.92M ✓
1-4 75 ENC

9.62M ✓
1-4 50 ENC

±2+081
±5M RT

101 PARK ST.

±2+100

±2+083

44
32

15
16
17
20
21
22
16
14
20
15
12
11

73 PARK ST.

10.93M ✓
1-4 75 ENC

11.70M ✓
1-4 75 ENC

59.67M ✓
NOTE 3

±2+131

11.78M
NOTE 2

±2+095 ±5M RT

±2+072

±2+053

6.20M ✓
1-4 75 ENC.

17.36M
NOTE 1

4/24/2012

±2+095 ±7M LT

4/25/2012

A-A

DATE OF DUCT PLACEMENT
4/26/2012

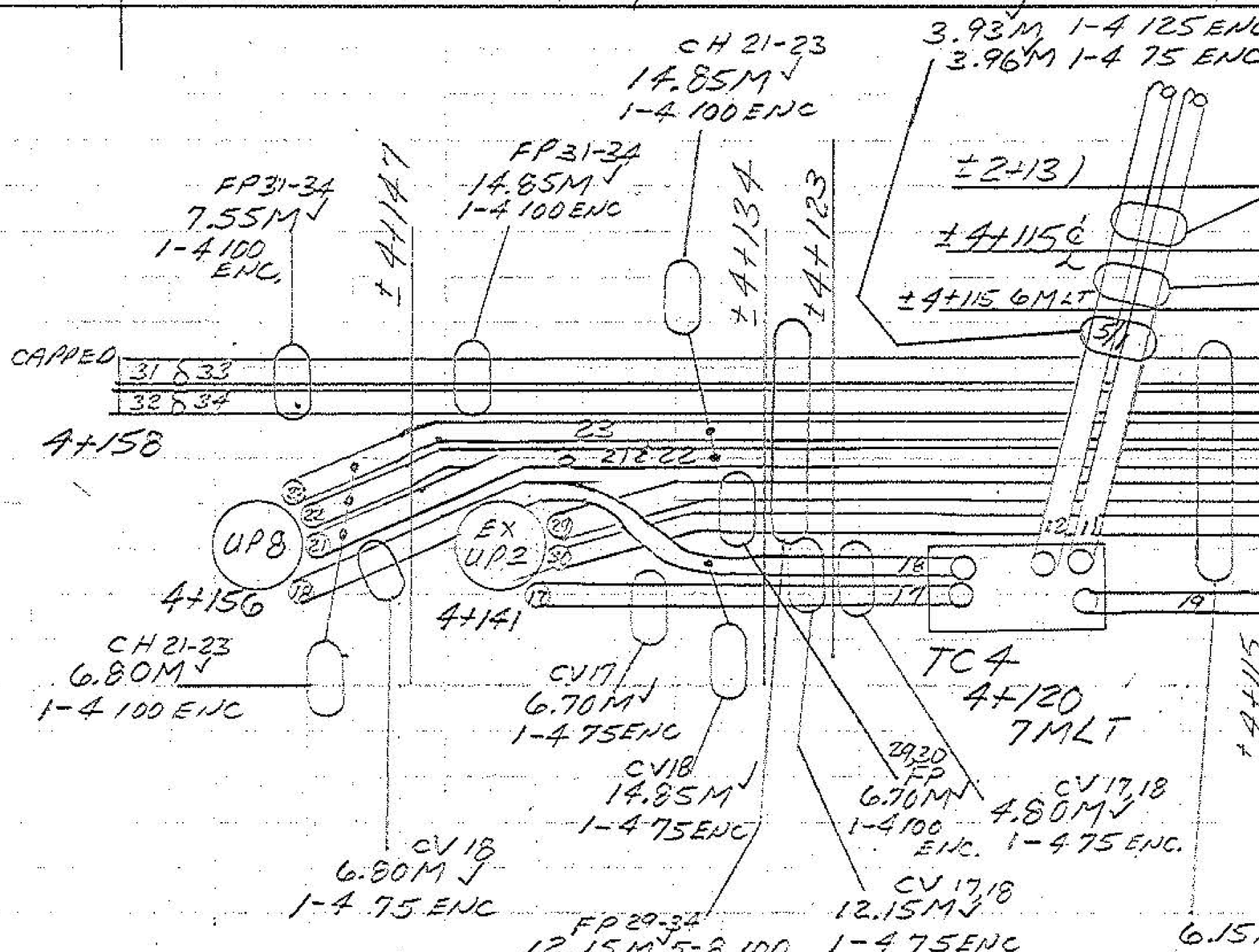

NOTE 1
8.95M 1-4 100 ENC CH 21-23

NOTE 2
10.41M 5-8 100 ENC FP 29-34

SCHEMATIC FOR DETAILING PAY ITEMS
DUCT LOCATIONS ARE NOT NECESSARILY
RELATIVE TO EACH OTHER

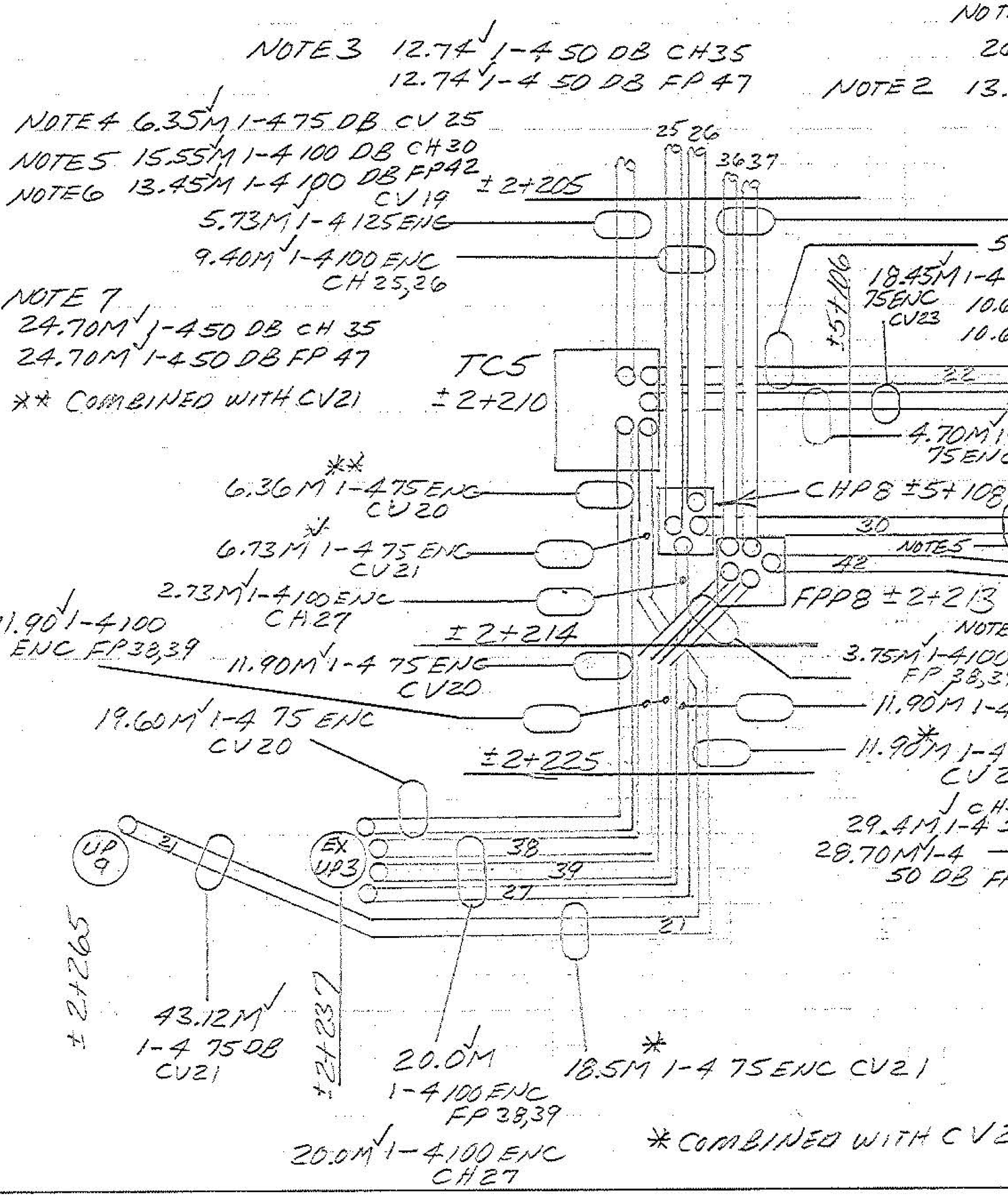
NOTE 3 12.74M 1-450 DB CH35
12.74M 1-450 DB FP47
NOTE 4 6.35M 1-475 DB CV25
NOTE 5 15.55M 1-4100 DB CH30
NOTE 6 13.45M 1-4100 DB FP42
CV19
5.73M 1-4125 ENC
9.40M 1-4100 ENC
CH 25,26
NOTE 7
24.70M 1-450 DB CH 35
24.70M 1-450 DB FP47
** COMBINED WITH CV21
TC5
±2+210
25 26
36 37
±2+205
±57+106
18.45M 1-4
75 ENC
CV23
4.70M
75 ENC
6.36M ** 1-475 ENC
CV20
CHP8 ±57+108
6.73M * 1-475 ENC
CV21
30
NOTE 5
42
2.73M 1-4100 ENC
CH27
FPP8 ±2+213
11.90 1-4100
ENC FP38,39
±2+214
11.90M 1-475 ENC
CV20
3.75M 1-4100
FP 38,39
19.60M 1-475 ENC
CV20
11.90M 1-4
±2+225
11.90* M 1-4
CV2
29.4M 1-4
28.70M 1-4
50 DB F
UP 9
EX UP3
21
38
39
27
21
±21265
43.12M
1-475 DB
CV21
±21237
20.0M
1-4100 ENC
FP 38,39
18.5M * 1-475 ENC CV21
20.0M 1-4100 ENC
CH27
* COMBINED WITH CV2

35500

* DUCTS 18 & 19 GOING PAST UP6 ARE THE SAME LENGTH AS 16 & 17 SWEEPING UP POLE UP6.

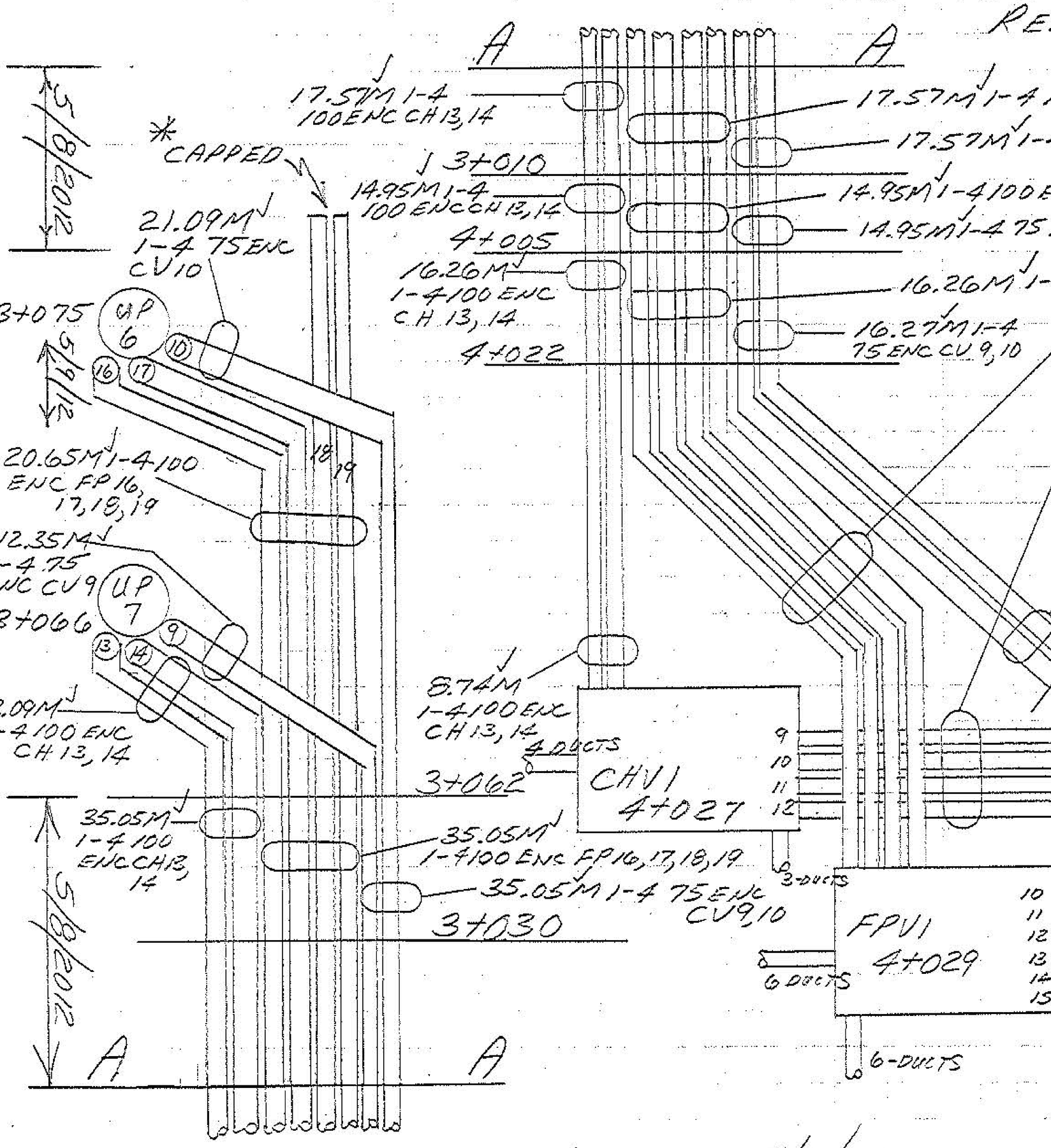

5/7/2012

NOTE 1: TRAFFIC CONTROL CABINET LOCATION ± 4+21 13M LT.

35500

5/4/2012

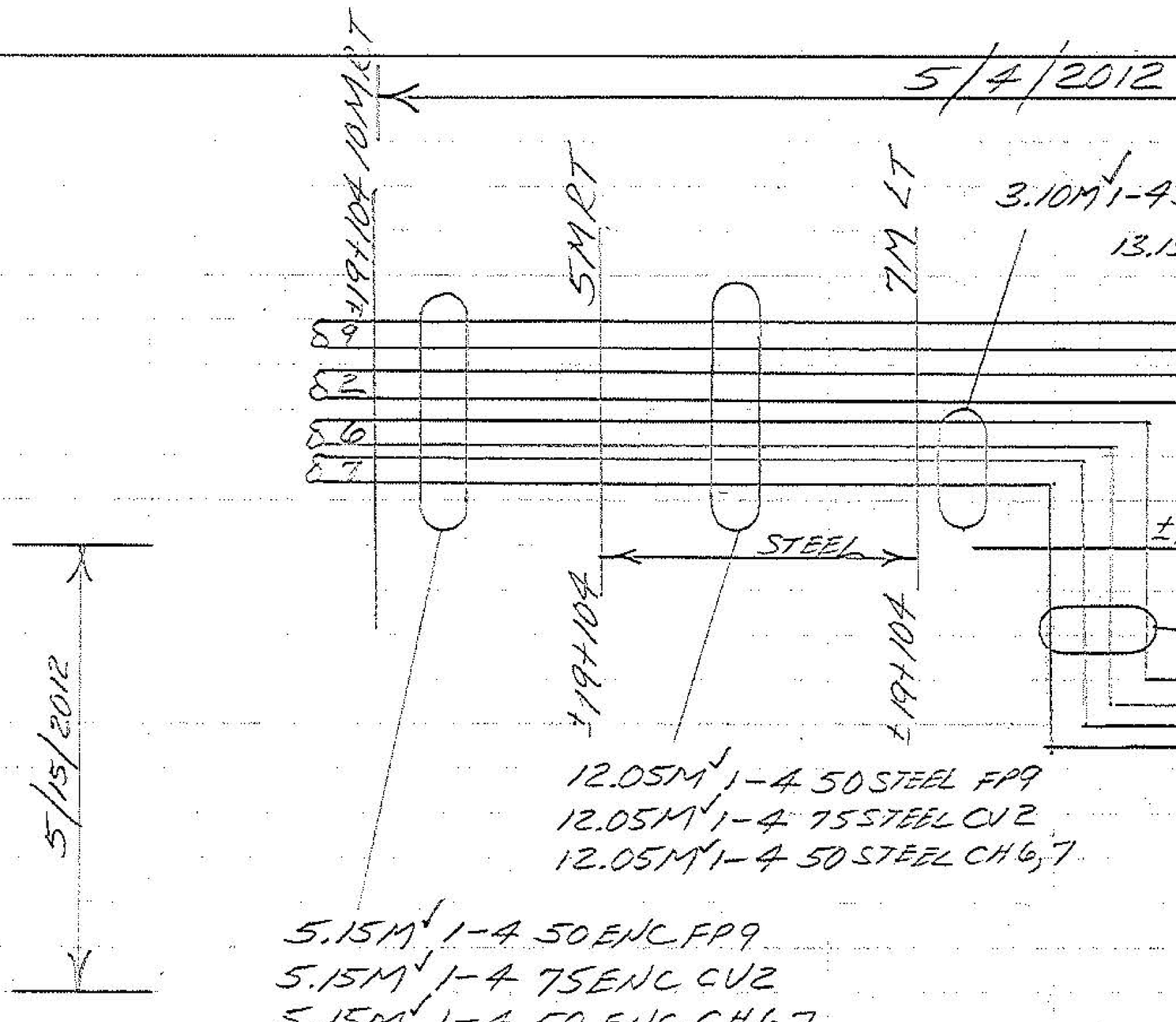

DUCT
ARE
RELAT