STATE OF VERMONT
AGENCY OF TRANSPORTATION



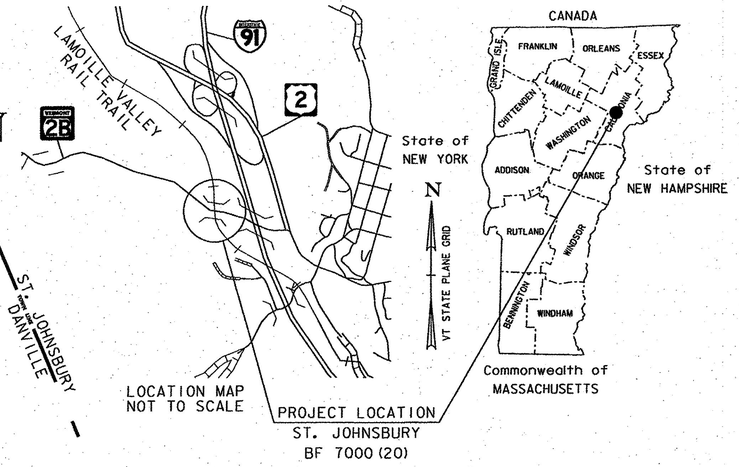

RECORD PLANS

CONTRACTOR: J.P. SICARD, INC. – BARTON, VT

RESIDENT ENGINEER: JAY STRONG

CONSTRUCTION BEGAN: MAY 10, 2017

CONSTRUCTION COMPLETE: SEPTEMBER 22, 2017

RECORD PLANS BY: JAY STRONG & AARON WEAVER

I HEREBY CERTIFY THAT ALL THE CONSTRUCTION REQUIRED BY THIS SET OF DRAWINGS HAS BEEN ACCOMPLISHED AS INDICATED HEREIN.

BY _____ RESIDENT ENGINEER

DATE 9/24/2018

NOTE: Any further information concerning final quantities, amounts or other details relative to this project may be found by contacting Vtrans Records Management.

PROPOSED IMPROVEMENT
BRIDGE PROJECT
TOWN OF ST. JOHNSBURY
COUNTY OF CALEDONIA
VT ROUTE 2B (URBAN MINOR ARTERIAL) BRIDGE NO. 6

PROJECT LOCATION: LOCATED IN THE TOWN OF ST. JOHNSBURY ON VT ROUTE 2B, APPROXIMATELY 0.353 MILES WESTERLY OF THE INTERSECTION OF US ROUTE 2 AND VT ROUTE 2B AND EXTENDING APPROXIMATELY 175 FEET.

PROJECT DESCRIPTION: WORK TO BE PERFORMED UNDER THIS PROJECT INCLUDES REPLACEMENT OF THE EXISTING 3 SPAN STEEL GIRDER BRIDGE WITH A NEW BURIED GALVANIZED STEEL STRUCTURAL PLATE ARCH WITH MSE WINGWALLS INCLUDING RELATED ROADWAY AND RAIL TRAIL WORK.

LENGTH OF STRUCTURE: 47.95 FEET
LENGTH OF ROADWAY: 127.05 FEET
LENGTH OF PROJECT: 175.00 FEET

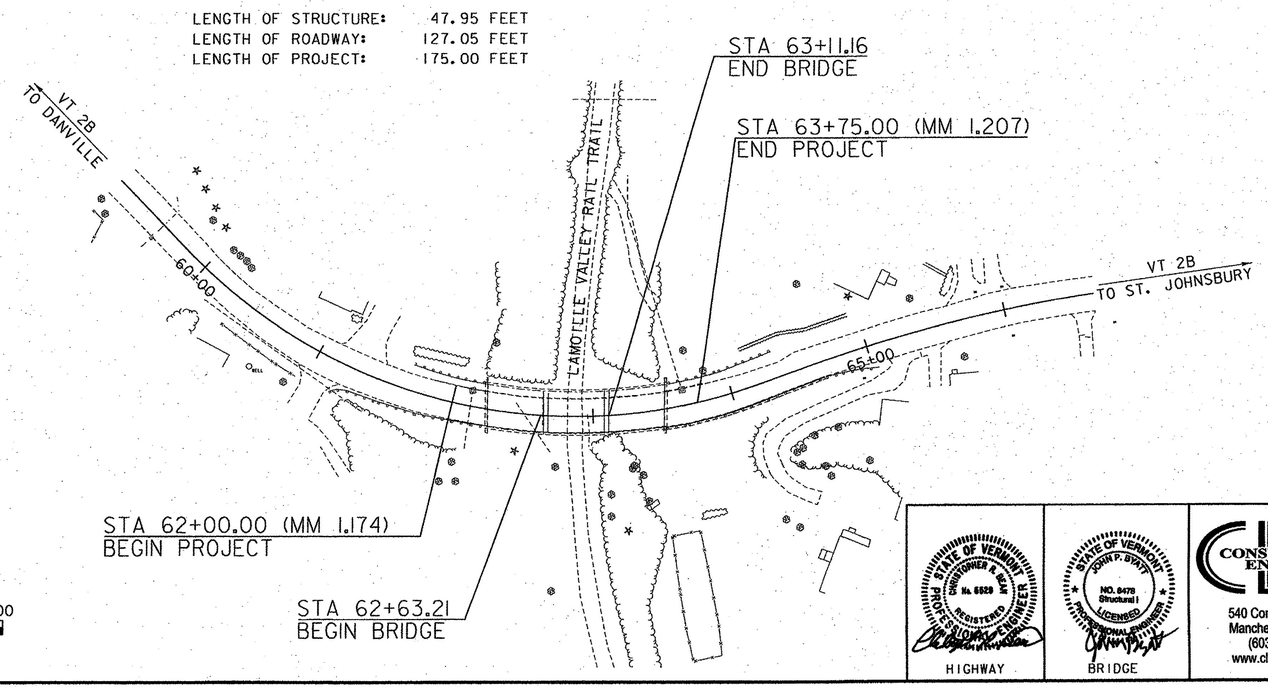

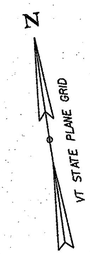

CONSTRUCTION IS TO BE CARRIED ON IN ACCORDANCE WITH THESE PLANS AND THE STANDARD SPECIFICATIONS FOR CONSTRUCTION DATED 2011, AS APPROVED BY THE FEDERAL HIGHWAY ADMINISTRATION ON JULY 20, 2011 FOR USE ON THIS PROJECT, INCLUDING ALL SUBSEQUENT REVISIONS AND SUCH REVISED SPECIFICATIONS AND SPECIAL PROVISIONS AS ARE INCORPORATED IN THESE PLANS.

QUALITY ASSURANCE PROGRAM : LEVEL 2

SURVEYED BY : VTRANS

SURVEYED DATE : 03/26/2013 & 7/22/2014

DATUM
VERTICAL NAVD88
HORIZONTAL NAD 83 (96)

0 50 100
SCALE IN FEET

STATE OF VERMONT — CHRISTOPHER A. BEAM — No. 6529 — REGISTERED PROFESSIONAL ENGINEER
HIGHWAY

STATE OF VERMONT — JOHN P. BYATT — NO. 8478 Structural — LICENSED PROFESSIONAL ENGINEER
BRIDGE

CONSULTING ENGINEERS
540 Commercial Street
Manchester, NH 03101
(603) 668-8223
www.cldengineers.com

DIRECTOR OF PROJECT DELIVERY
APPROVED _____ DATE 9/27/2016

PROJECT MANAGER : WENDY PELLETIER, P.E.

PROJECT NAME : ST. JOHNSBURY
PROJECT NUMBER : BF 7000 (20)

SHEET 1 OF 70 SHEETS

STATE OF VERMONT
AGENCY OF TRANSPORTATION

PRELIMINARY INFORMATION SHEET (CULVERT)

Version
LRFD

INDEX OF SHEETS

PLAN SHEETS

1	TITLE SHEET
2	PRELIMINARY INFORMATION SHEET
3	TYPICAL BRIDGE SECTIONS SHEET
4	TYPICAL ROADWAY SECTIONS SHEET
5	MATERIAL TRANSITION DIAGRAM SHEET
6 - 8	TYPICAL EARTHWORK SECTIONS SHEETS
9 - 10	PROJECT NOTES SHEETS
11 - 13	QUANTITY SHEETS
14	CONVENTIONAL SYMBOLOGY LEGEND SHEET
15 - 16	TIE SHEETS
17	LAYOUT SHEET
18	VT 2B PROFILE AND BANKING DIAGRAM SHEET
19	DETOUR MAP
20	DETOUR SIGNS AND NOTES SHEET
21 - 22	DETOUR SIGN SUMMARY SHEETS
23	TRAFFIC CONTROL SHEET
24	UTILITY RELOCATION SHEET
25	SIGNING AND STRIPING LAYOUT SHEET
26	SIGN DETAIL SHEET
27	BORING INFORMATION SHEET
28 - 31	BORING LOGS SHEETS
32	INSTRUMENTATION INFORMATION SHEET
33	PLAN AND ELEVATION SHEET
34	WORKING POINT LAYOUT SHEET
35 - 37	STRUCTURE DETAILS SHEETS
38 - 40	RAIL SUPPORT SLAB DETAILS SHEETS
41 - 42	SPREAD FOOTING DETAILS SHEETS
43 - 44	WALL ELEVATION SHEETS
45	BOARDWALK DETAIL SHEET
46	RAIL LAYOUT SHEET
47	BRIDGE RAIL DETAILS SHEET
48 - 51	APPROACH RAIL DETAIL SHEETS
52	REINFORCING STEEL SCHEDULE
53 - 58	VT 2B CROSS SECTIONS SHEETS
59 - 60	TRAIL CROSS SECTIONS SHEETS
61	STONE LINED DITCH CROSS SECTIONS SHEET
62	EPSC NARRATIVE
63	EPSC EXISTING PLAN SHEET
64	EPSC CONSTRUCTION PLAN SHEET
65	EPSC FINAL PLAN SHEET
66 - 68	EPSC DETAILS SHEETS
69	ROW DETAIL SHEET
70	ROW LAYOUT SHEET
	REFERENCE DRAWINGS SP 15-00388 1-6
	REFERENCE DRAWINGS VA15-00388 1-16
	REFERENCE DRAWINGS - RECORD PLANS 1-7 (2)

STANDARDS LIST

B-5	SLOPE GRADING, EMBANKMENTS, MUCK	06-01-1994
B-71	STANDARD FOR RESIDENTIAL AND COMMERCIAL DRIVES	07-08-2005
C-10	CURBING	02-11-2008
D-15	PRECAST REINF CONC. MH-GRATES, CAST IRON GRATE WITH FRAME, TYPE D & E	06-01-1994
E-121	STANDARD SIGN PLACEMENT - CONVENTIONAL ROAD	08-08-1995
E-127	ROUTE MARKINGS AT RURAL INTERSECTIONS	08-08-1995
E-136B	STATE ROUTE MARKER SIGN DETAILS	08-08-1995
E-193	PAVEMENT MARKING DETAILS	08-18-1995
G-1bM	BOX BEAM GUARD RAIL	06-13-1997
G-19	GENERIC GRADING PLANS FOR GUARDRAIL END TERMINALS	11-15-2002
J-3	MAIL BOX SUPPORT DETAILS	08-07-1995
L-1	SETTLEMENT PLATFORM TYPE I STANDPIPE TYPE TYPE II REMOTE READING TYPE	03-09-1995
L-2	GEOTECHNICAL INSTRUMENTATION	07-24-1995
S-352A	BRIDGE RAILING, GALVANIZED STEEL TUBING/CONCRETE COMBINATION	08-22-2012
S-352B	BRIDGE RAILING, GALVANIZED STEEL TUBING/CONCRETE COMBINATION	08-22-2012
S-352C	BRIDGE RAILING, GALVANIZED STEEL TUBING/CONCRETE COMBINATION	08-22-2012
T-1	TRAFFIC CONTROL GENERAL NOTES	04-25-2016
T-2	TRAFFIC SIGN GENERAL NOTES	04-25-2016
T-10	CONVENTIONAL ROADS CONSTRUCTION APPROACH SIGNING	08-06-2012
T-17	TRAFFIC CONTROL MISCELLANEOUS DETAILS	08-06-2012
T-28	CONSTRUCTION SIGN DETAILS	08-06-2012
T-29	CONSTRUCTION SIGN DETAILS	08-06-2012
T-30	CONSTRUCTION SIGN DETAILS	08-06-2012
T-36	CONSTRUCTION ZONE LONGITUDINAL DROP-OFFS FOR PAVING	08-06-2012
T-40	DELINEATORS AND MILEPOSTS	01-02-2013
T-42	BRIDGE NUMBER PLAQUE	04-09-2014
T-45	SQUARE TUBE SIGN POST AND ANCHOR	01-02-2013

STRUCTURES DETAIL SHEETS

SD-501.00	CONCRETE DETAILS AND NOTES	2/9/2012
SD-502.00	CONCRETE DETAILS AND NOTES	10/10/2012

HIGHWAY SAFETY AND DESIGN DETAILS

HSD-621.06	GUARDRAIL TERMINAL LABEL DETAIL	11/3/2015

FINAL HYDRAULIC REPORT



TRAFFIC MAINTENANCE NOTES

1. MAINTAIN TRAFFIC ON AN OFF SITE DETOUR.
2. TRAFFIC SIGNALS ARE NOT NECESSARY.
3. SIDEWALKS ARE NOT NECESSARY

DESIGN VALUES

1. DESIGN LIVE LOAD		HL-93
2. FUTURE PAVEMENT	d_p:	---
3. CULVERT OPENING	D:	47.92 FT
4. MIN. MID-SPAN POS. CAMBER @ RELEASE (PRESTRESSED UNITS)	Δ:	---
5. PRESTRESSING STRAND	f_y:	---
6. PRESTRESSED CONCRETE STRENGTH	f'_{ci}:	---
7. PRESTRESSED CONCRETE RELEASE STRENGTH	f'_{ci}:	---
8. CONCRETE, HIGH PERFORMANCE CLASS AA	f'_c:	---
9. CONCRETE, HIGH PERFORMANCE CLASS A	f'_c:	4.0 KSI
10. CONCRETE, HIGH PERFORMANCE CLASS B	f'_c:	---
11. CONCRETE, CLASS C	f'_c:	3.0 KSI
12. REINFORCING STEEL	f_y:	60 KSI
13. STRUCTURAL STEEL AASHTO M270	f_y:	---
14. NOMINAL BEARING RESISTANCE OF SOIL	q_n:	SEE NOTES
15. SOIL BEARING RESISTANCE FACTOR (REFER TO AASHTO LRFD)	ϕ:	0.45
16. NOMINAL BEARING RESISTANCE OF ROCK	q_n:	---
17. ROCK BEARING RESISTANCE FACTOR (REFER TO AASHTO LRFD)	ϕ:	---
18. PILE RESISTANCE FACTOR	ϕ:	---
19. LATERAL PILE DEFLECTION	Δ:	---
20. BASIC WIND SPEED	V_{3s}:	---
21. MINIMUM GROUND SNOW LOAD	p_g:	---
22. SEISMIC DATA PGA: 0	S_s:	---
	S_1:	---
23.		---
24.		---
25.		---
26.		---

LRFR LOAD RATING FACTORS

LOADING LEVELS	TRUCK						
	H-20	HL-93	3S2	6 AXLE	3A STR.	4A STR.	5A SEM
TONNAGE	20	36	36	66	30	34.5	38
INVENTORY							
POSTING							
OPERATING							
COMMENTS:	TABLE TO BE COMPLETED BY CONTRACTOR'S DESIGNER						

CULVERT DESIGN CRITERIA

1. PROPOSED CULVERT IS A DEEP CORRUGATED STRUCTURAL PLATE BURIED BRIDGE (47'-11" X 26'-9" X 40'-3" ARCH).
2. CULVERT ENDS ARE NOT SKEWED.
3. CULVERT WILL BE SET AT A SLOPE OF 0.00 IN. ON 0 FT.
4. CULVERT WILL NOT REQUIRE FISH PASSAGE ACCOMODATIONS
5. CULVERT CONSTRUCTION WILL NOT REQUIRE A TEMPORARY PIPE

REVISION	DATE	DESCRIPTION	BY
(2)	12-05-2016	ADD RECORD PLANS	SRB

AS BUILT "REBAR" DETAIL

LEVEL I	LEVEL II	LEVEL III
TYPE:	TYPE:	TYPE:
GRADE:	GRADE:	GRADE:

TRAFFIC DATA

YEAR	ADT	DHV	% D	% T	ADTT
2016	820	85	50	1.6	20
2036	860	90	50	2.2	30

20 year ESAL for flexible pavement from 2016 to 2036 : 147000

40 year ESAL for flexible pavement from 2016 to 2056 : 341000

Design Speed : 35 mph

PROJECT NAME: ST. JOHNSBURY
PROJECT NUMBER: BF 7000(20)

FILE NAME: 86e048/cos/z86e048pi.dgn
PROJECT LEADER: J.BYATT
DESIGNED BY: S.BEAUMONT
PRELIMINARY INFORMATION SHEET

PLOT DATE: 11/30/2016
DRAWN BY: M.SMITH
CHECKED BY: A.GIRALDI
SHEET 2 OF 70

MODEL: PI
CLD 14-0116

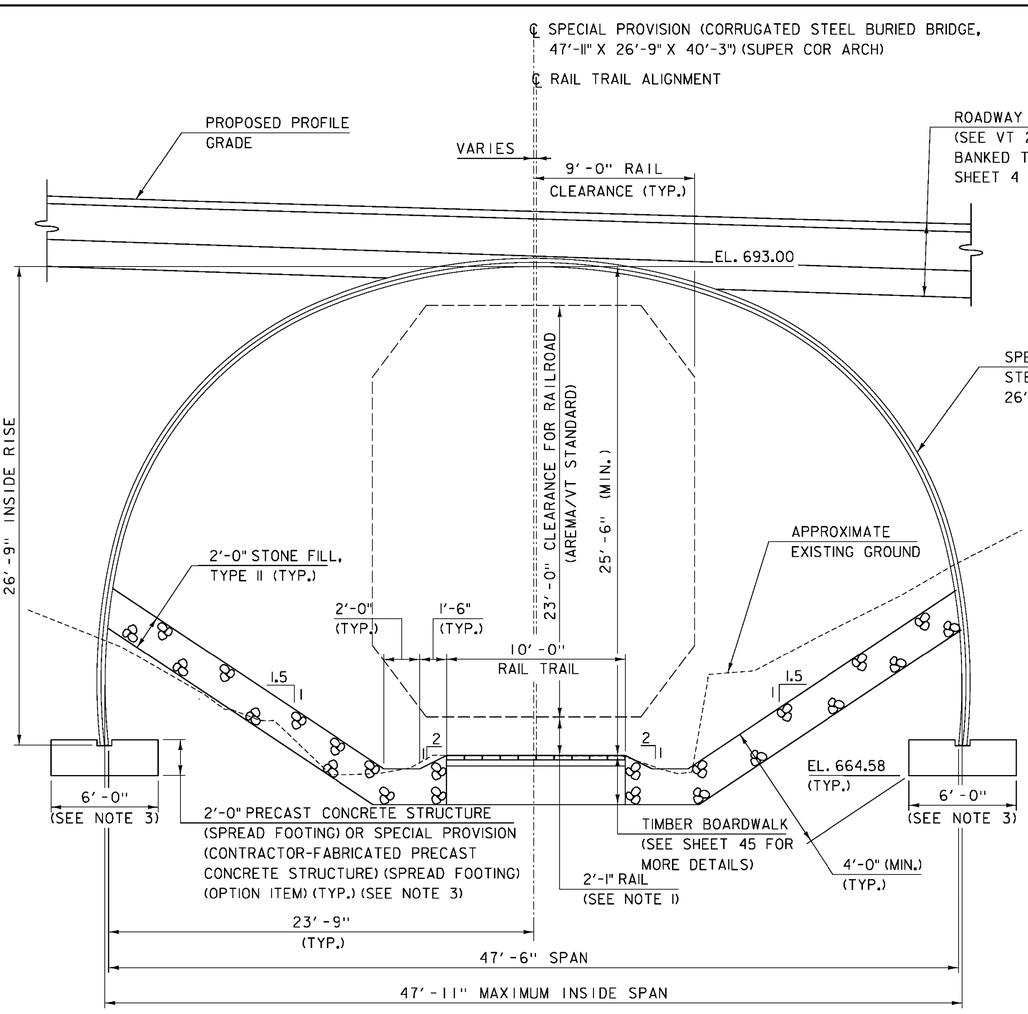

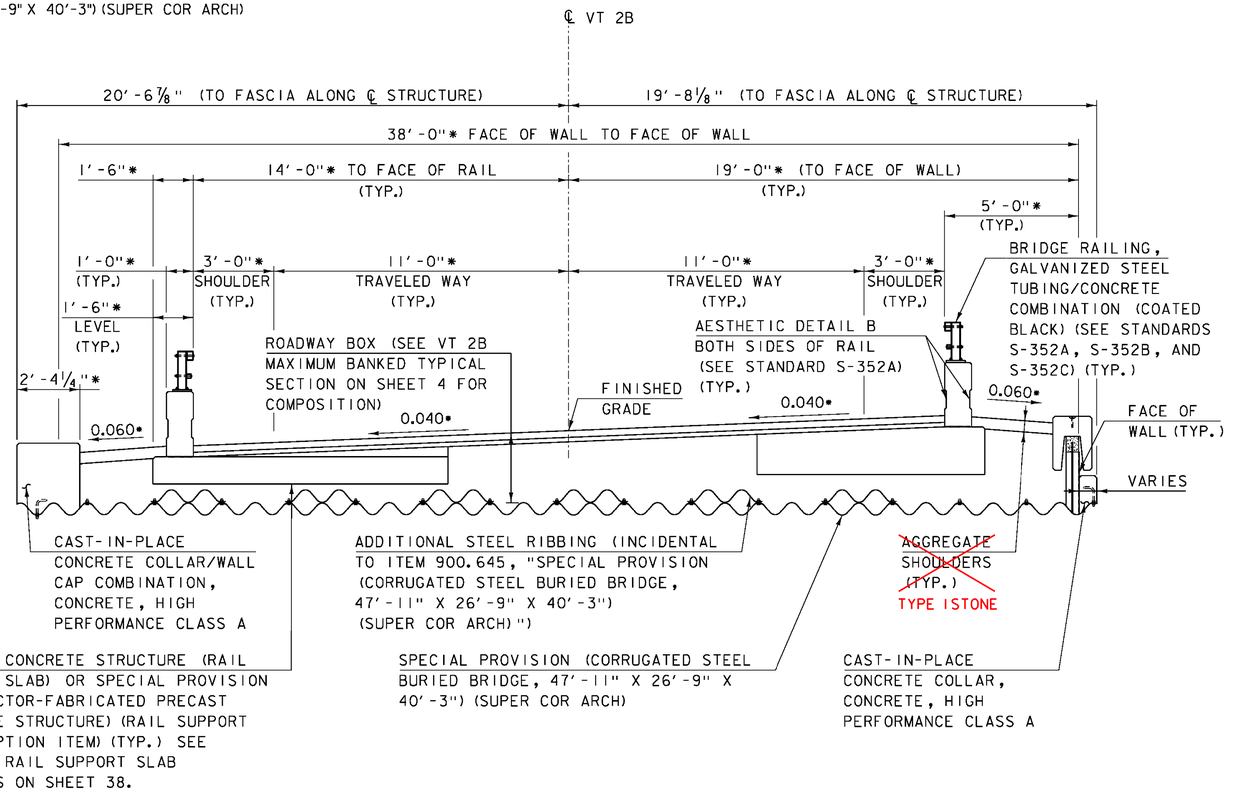

CORRUGATED STRUCTURAL STEEL PLATE ARCH TYPICAL SECTION

SCALE: 1/4" = 1'-0"

TYPICAL LONGITUDINAL BRIDGE SECTION

SCALE: 3/8" = 1'-0"

* DIMENSIONS AND SLOPES GIVEN PERPENDICULAR TO ROADWAY ℄

NOTES:

1. 2'-1" RAIL DEPTH INCLUDES ALLOWANCE FOR 18" OF BALLAST AND 7" OF RAIL SHOULD THE LVRR BE REACTIVATED.
2. SEE STRUCTURAL ELEMENTS NOTES ON SHEET 9 AND CORRUGATED STRUCTURAL STEEL PLATE BURIED BRIDGE SYSTEM NOTES AND VIST-A-WALL RETAINING WALL SYSTEM NOTES ON SHEET 10. ALL STRUCTURE DIMENSIONS WERE PROVIDED BY BIG R BRIDGE.
3. SEE SPREAD FOOTING, RAIL SUPPORT SLAB, AND WALL CAP INFORMATION IN PRECAST CONCRETE ELEMENTS NOTES ON SHEET 10.

CLD 14-0116 MODEL: SUB01

CONSULTING ENGINEERS

PROJECT NAME: ST. JOHNSBURY	
PROJECT NUMBER: BF 7000(20)	
FILE NAME: 86e048/cos/z86e048sub.dgn	PLOT DATE: 10/26/2016
PROJECT LEADER: J.BYATT	DRAWN BY: M.SMITH
DESIGNED BY: A. GIRALDI	CHECKED BY: S.BEAUMONT
TYPICAL BRIDGE SECTIONS SHEET	SHEET 3 OF 70

MATERIAL TOLERANCES
(IF USED ON PROJECT)

SURFACE	
- PAVEMENT (TOTAL THICKNESS)	+/- 1/4"
- AGGREGATE SURFACE COURSE	+/- 1/2"
SUBBASE	+/- 1"
SAND BORROW	+/- 1"

3" SPECIAL PROVISION (BITUMINOUS CONCRETE PAVEMENT, SMALL QUANTITY) (2-1 1/2" LIFTS) (TYPE IVS)
2" SPECIAL PROVISION (BITUMINOUS CONCRETE PAVEMENT, SMALL QUANTITY) (TYPE IIIS)
24" SUBBASE OF DENSE GRADED CRUSHED STONE
18" SAND BORROW

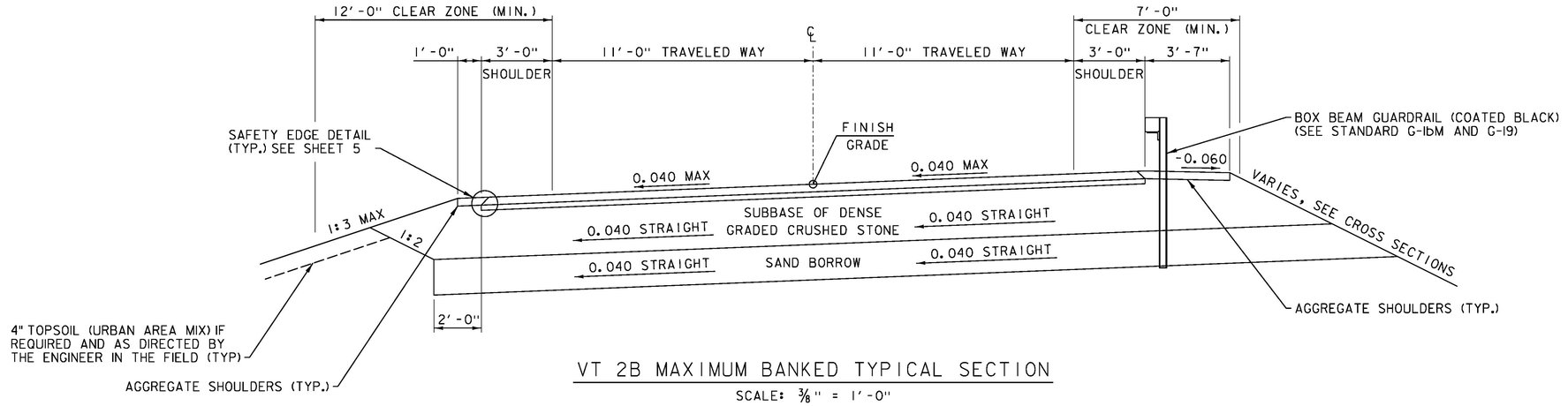

VT 2B MAXIMUM BANKED TYPICAL SECTION
SCALE: 3/8" = 1'-0"

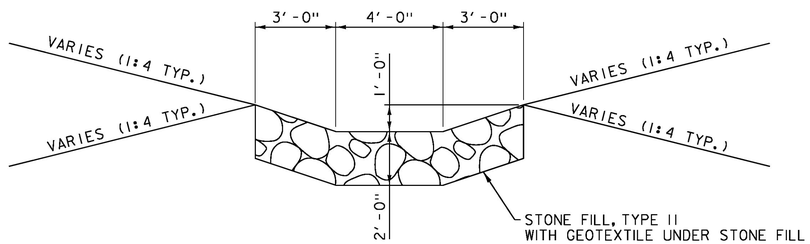

STONE LINED DITCH DETAIL
SCALE: 3/8" = 1'-0"

CLD 14-016 MODEL: TYPICAL 01

PROJECT NAME:	ST. JOHNSBURY
PROJECT NUMBER:	BF 7000(20)
FILE NAME: 86e048/cos/z86e048frm.dgn	PLOT DATE: 10/26/2016
PROJECT LEADER: J.BYATT	DRAWN BY: W.GORDON
DESIGNED BY: M.HALEY	CHECKED BY: P.SHEDD
TYPICAL ROADWAY SECTIONS SHEET	SHEET 4 OF 70

CLD CONSULTING ENGINEERS

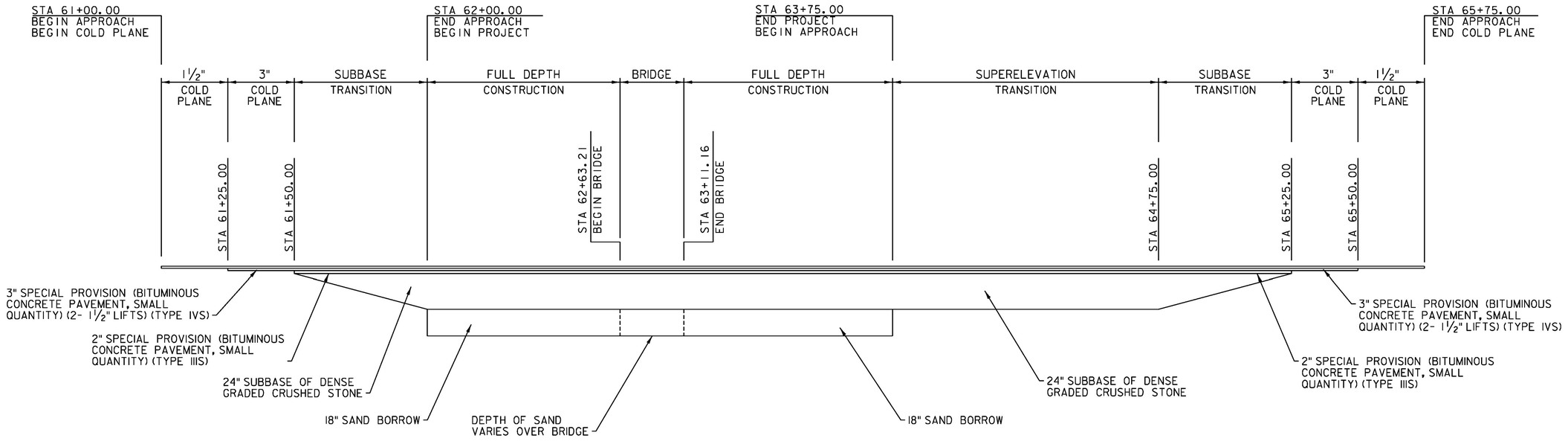

MATERIAL TRANSITION DIAGRAM

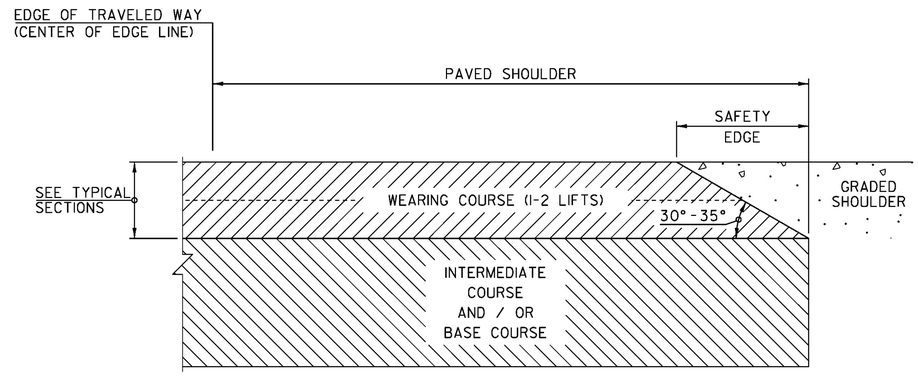

SAFETY EDGE DETAIL

SAFETY EDGE NOTES

1. THE EDGE OF PAVEMENT SHALL BE FORMED IN SUCH A WAY THAT THE BITUMINOUS CONCRETE PAVEMENT IS EXTRUDED OR COMPRESSED TO FORM THE 30 TO 35 DEGREE ANGLE. DEVICES THAT SIMPLY STRIKE-OFF THE MIX WITHOUT PROVIDING ANY COMPACTIVE EFFORT WILL NOT BE ALLOWED.

2. THE PAVED SHOULDER EXTENDS FROM THE EDGE OF TRAVELED WAY TO THE EDGE OF THE WEARING COURSE, INCLUDING THE "SAFETY EDGE".

NOT TO SCALE

CLD 14-0116 MODEL: TYPICAL 02

PROJECT NAME: ST. JOHNSBURY	
PROJECT NUMBER: BF 7000(20)	
FILE NAME: 86e048/cos/z86e048frm.dgn	PLOT DATE: 10/26/2016
PROJECT LEADER: J.BYATT	DRAWN BY: W.GORDON
DESIGNED BY: M.HALEY	CHECKED BY: P.SHEDD
MATERIAL TRANSITION DIAGRAM SHEET	SHEET 5 OF 70

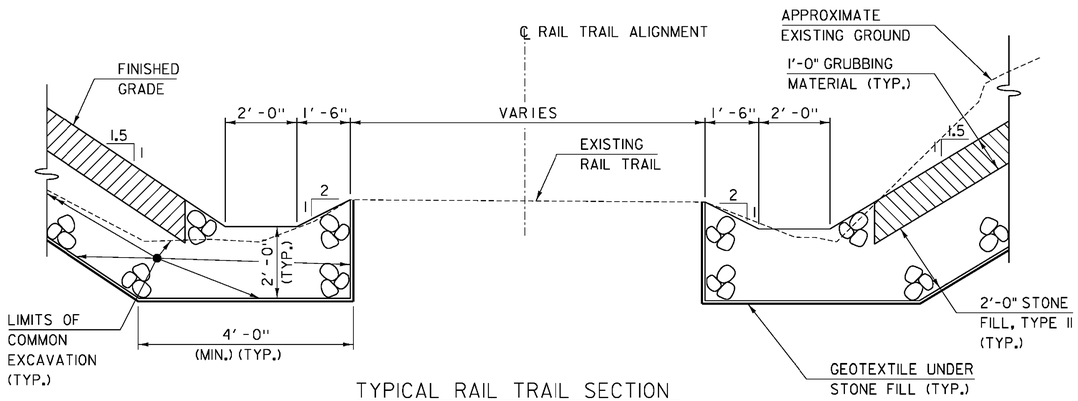

TYPICAL RAIL TRAIL SECTION

STA. 78+75.00 TO STA. 79+25.00 AND STA. 80+00.00 TO STA. 80+10.00
SCALE: ½" = 1'-0"

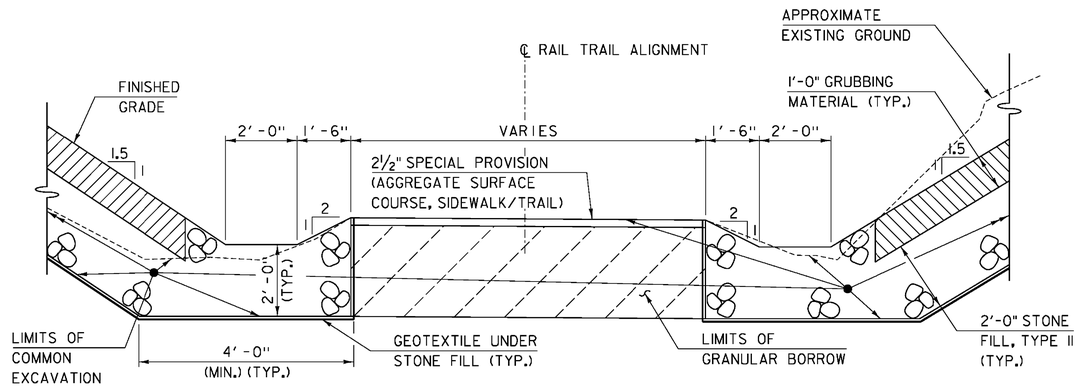

TYPICAL RAIL TRAIL SECTION

STA. 79+25.00 TO STA. 79+37.00 AND STA. 79+85.67 TO STA. 80+00.00
SCALE: ½" = 1'-0"

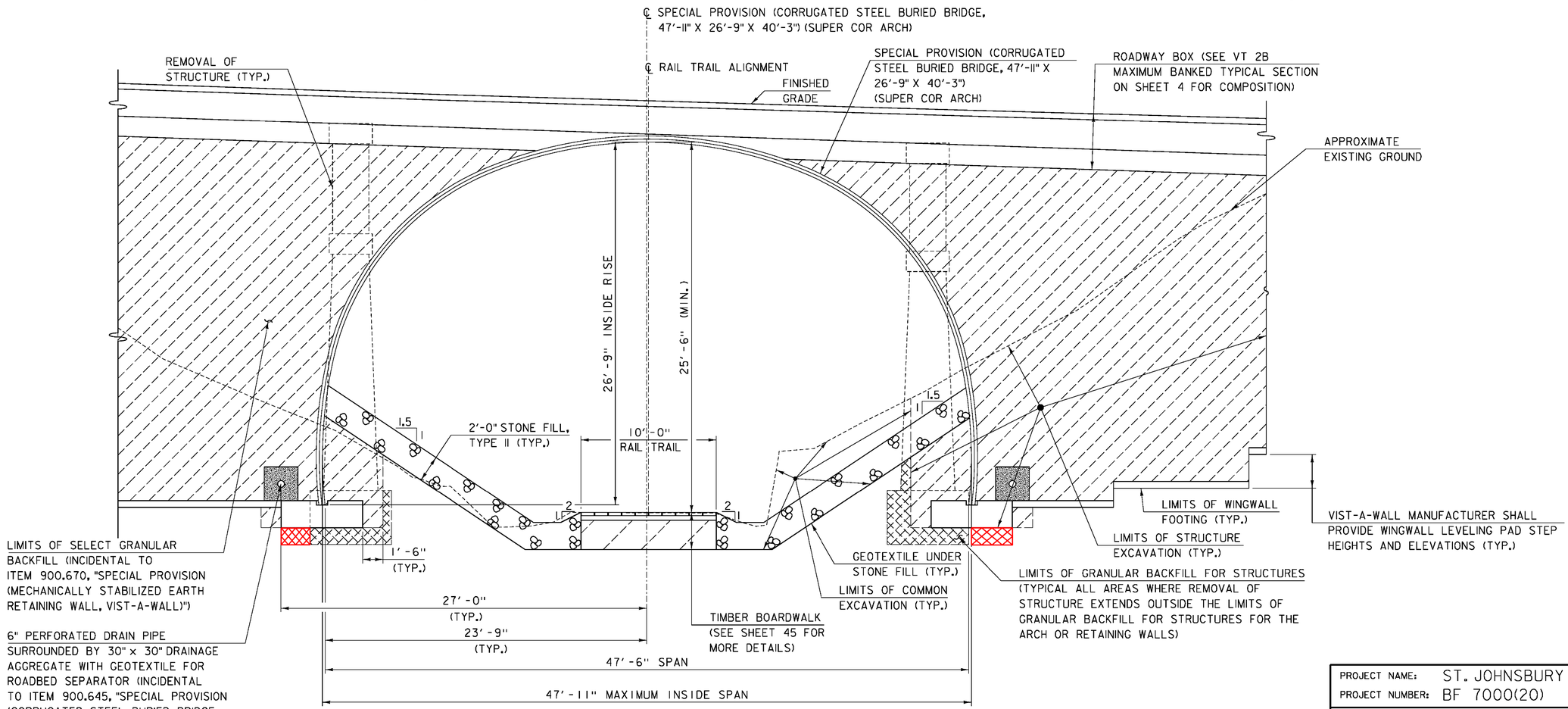

TYPICAL CORRUGATED STRUCTURAL STEEL PLATE ARCH EARTHWORK SECTION

SCALE: ¼" = 1'-0"

MODEL: SUB02
CLD 14-0116

PROJECT NAME:	ST. JOHNSBURY
PROJECT NUMBER:	BF 7000(20)
FILE NAME: 86e048/cos/z86e048sub.dgn	PLOT DATE: 10/26/2016
PROJECT LEADER: J.BYATT	DRAWN BY: M.SMITH
DESIGNED BY: A.GIRALDI	CHECKED BY: S.BEAUMONT
TYPICAL EARTHWORK SECTIONS SHEET 1	SHEET 6 OF 70

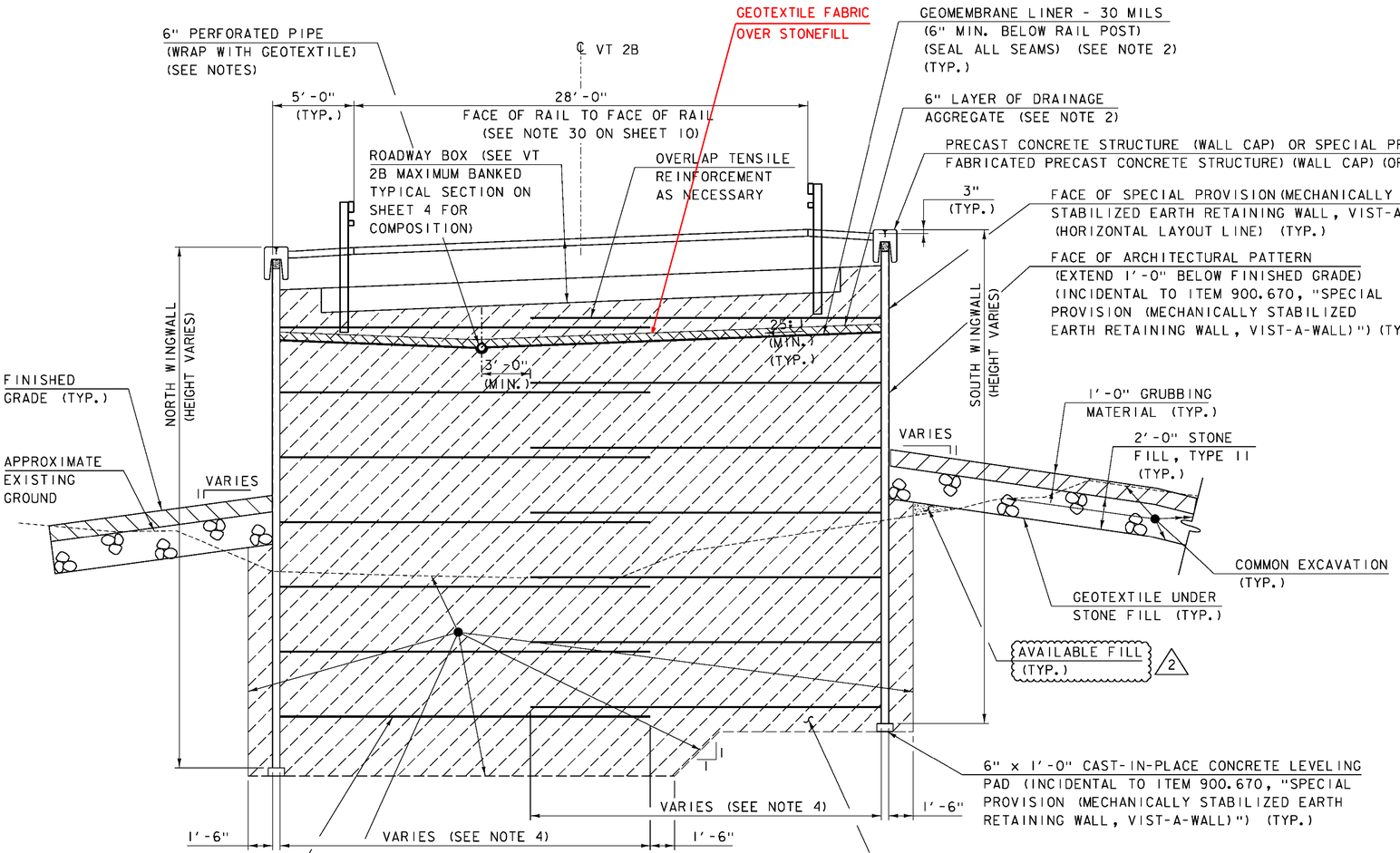

TYPICAL WINGWALL SECTION
(WITH OVERLAPPING TENSILE REINFORCEMENT)

(STA. 62+31.43 TO STA. 63+39.05)
SCALE: 1/4" = 1'-0"

REVISION	DATE	DESCRIPTION	BY
1	11-23-2016	ADD NOTE	SRB
2	12-05-2016	CHANGE LABEL	SRB

* 1 THE MAXIMUM ANTICIPATED SETTLEMENT OF THE MSE BACKFILL IS 2.5 INCHES. THIS SETTLEMENT IS CONSIDERED TO BE UNIFORM ACROSS THE FOOTPRINT OF THE WALL AND SHOULD OCCUR WITHIN THE TIMEFRAME OF THE WALL INSTALLATION. PAY LIMITS FOR THE SELECT GRANULAR BACKFILL WILL BE AS SHOWN ON THE PLANS IRREGARDLESS OF ANY ANTICIPATED SETTLEMENT.

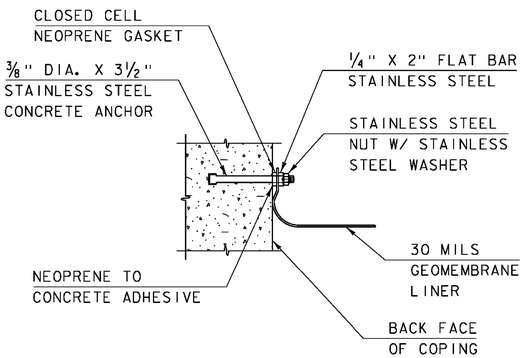

MEMBRANE CONNECTION
TO PANELS DETAIL
NOT TO SCALE

NOTES:

1. A SINGLE PERFORATED PIPE SHALL ACCOMMODATE BOTH WALLS IN AREAS WHERE THE WALLS RUN PARALLEL TO EACH OTHER AND THE TENSILE REINFORCEMENT FOR EACH WALL OVERLAPS. THE PIPE SHALL BE LOCATED A MINIMUM OF 3'-0" FROM THE END OF THE TENSILE REINFORCEMENT FOR THE SOUTH WALL AND CONTINUE AT THIS OFFSET A MINIMUM OF 5'-0" PAST THE END OF BOTH WALLS. SEE SHEET 17 FOR UNDERDRAIN LAYOUT.
2. ALL MATERIALS NECESSARY FOR DRAINAGE BEHIND THE SPECIAL PROVISION (MECHANICALLY STABILIZED EARTH RETAINING WALL, VIST-A-WALL), INCLUDING, BUT NOT LIMITED TO, THE 6" PERFORATED PIPE, DRAINAGE AGGREGATE, AND GEOMEMBRANE LINER, WILL BE CONSIDERED INCIDENTAL TO ITEM 900.670, "SPECIAL PROVISION (MECHANICALLY STABILIZED EARTH RETAINING WALL, VIST-A-WALL)". SEE NOTES 31 AND 32 ON SHEET 10.
3. ADJUST GEOMEMBRANE LINER AND REINFORCEMENT STRIP DEPTHS TO ENSURE THE ENTIRETY OF THE ARCH IS COVERED.
4. TENSILE REINFORCEMENT STRIP LENGTH VARIES. STRIP LENGTHS AND STRIP OVERLAP DETAILS WILL BE PROVIDED BY THE VIST-A-WALL MANUFACTURER.
5. ALL ATTACHMENT DEVICES AND FASTENERS WILL BE CONSIDERED INCIDENTAL TO ITEM 900.670, "SPECIAL PROVISION (MECHANICALLY STABILIZED EARTH RETAINING WALL, VIST-A-WALL)". SEE NOTE 23 ON SHEET 10.

CLD 14-0116 MODEL: SUB03

CONSULTING ENGINEERS

PROJECT NAME: ST. JOHNSBURY
PROJECT NUMBER: BF 7000(20)

FILE NAME: 86e048/cos/z86e048sub.dgn
PROJECT LEADER: J.BYATT
DESIGNED BY: A. GIRALDI
TYPICAL EARTHWORK SECTIONS SHEET 2

PLOT DATE: 11/30/2016
DRAWN BY: M.SMITH
CHECKED BY: S.BEAUMONT
SHEET 7 OF 70

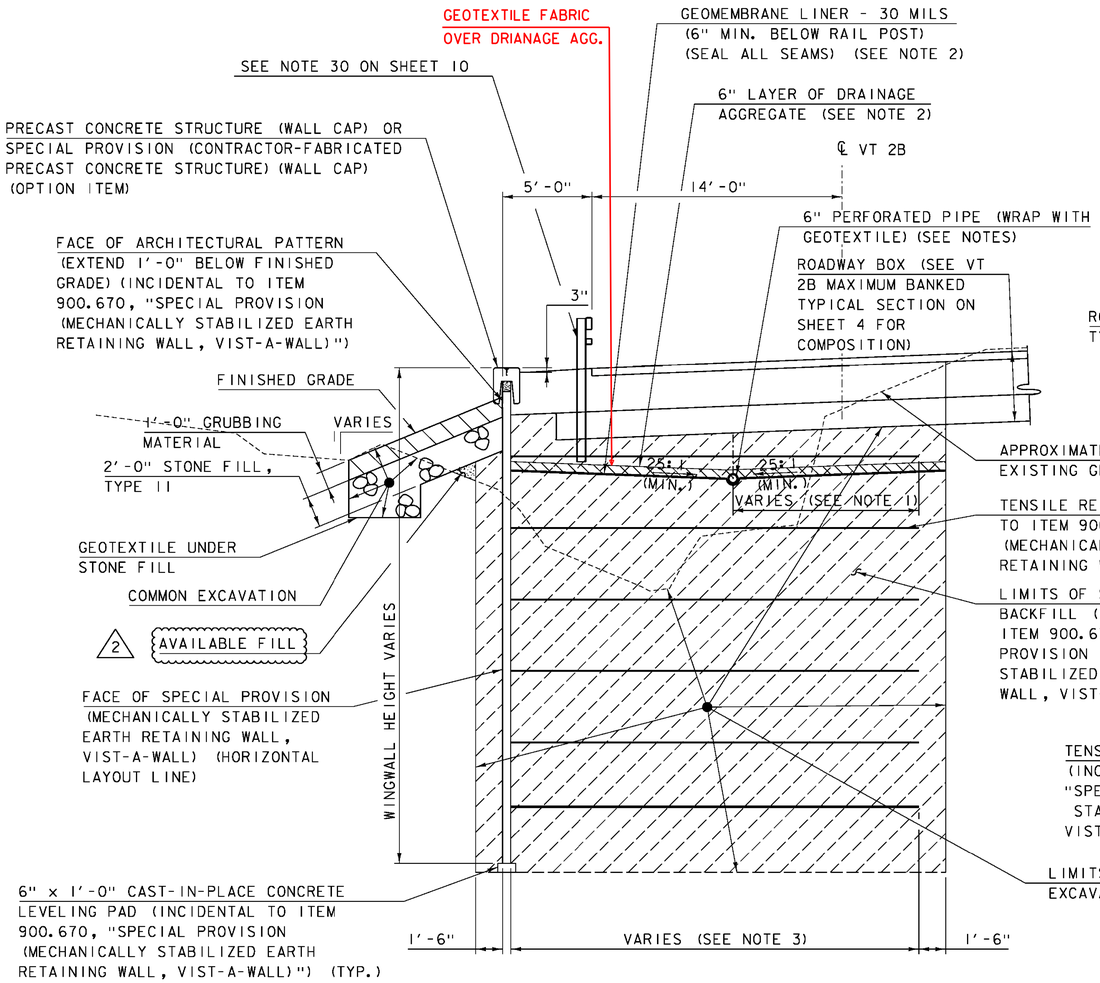

TYPICAL WINGWALL SECTION

(STA. 62+24.43 LT TO STA. 62+31.43 LT
AND STA. 63+39.05 LT TO STA. 63+43.37 LT)
SCALE: 1/4" = 1'-0"

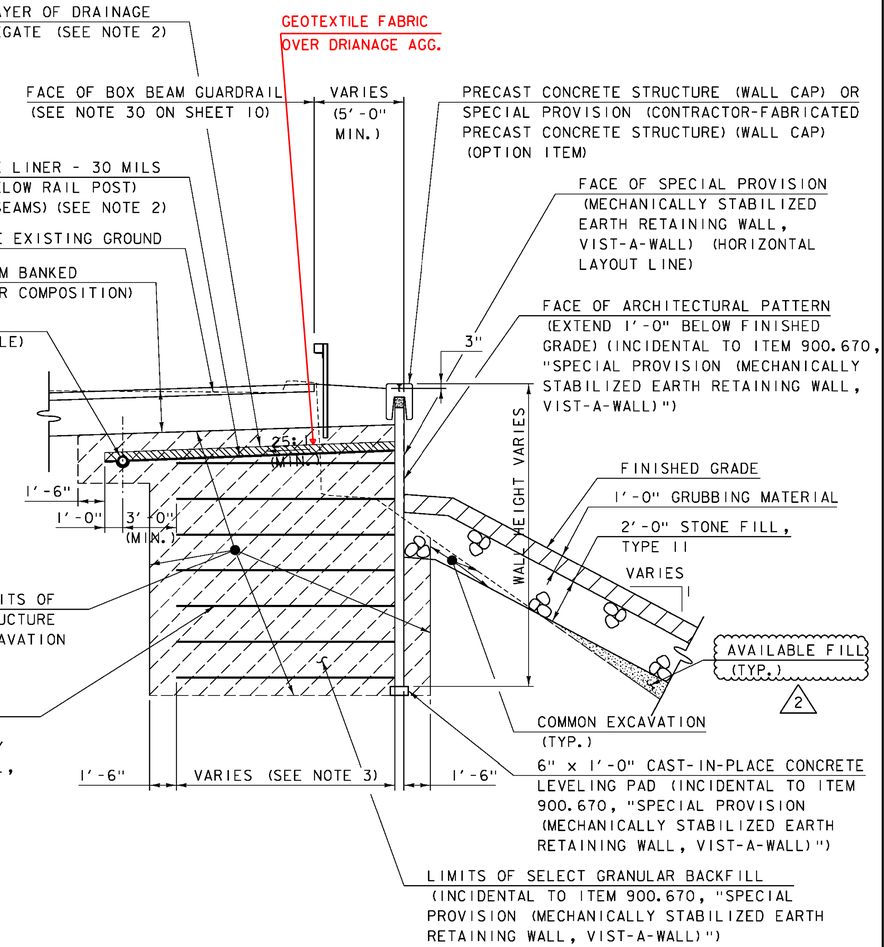

TYPICAL DRIVE RETAINING WALL SECTION

(STA. 63+92.00 RT TO STA. 65+05.00 RT)
SCALE: 1/4" = 1'-0"

REVISION	DATE	DESCRIPTION	BY
1	11-23-2016	ADD NOTE	SRB
2	12-05-2016	CHANGE LABEL	SRB

NOTES:

1. A SINGLE PERFORATED PIPE SHALL ACCOMMODATE BOTH WALLS IN AREAS WHERE THE WALLS RUN PARALLEL TO EACH OTHER AND THE TENSILE REINFORCEMENT FOR EACH WALL OVERLAPS. THE PIPE SHALL BE LOCATED A MINIMUM OF 3'-0" FROM THE END OF THE TENSILE REINFORCEMENT FOR THE SOUTH WALL AND CONTINUE AT THIS OFFSET A MINIMUM OF 5'-0" PAST THE END OF BOTH WALLS. SEE SHEET 7 FOR TYPICAL WINGWALL SECTION (WITH OVERLAPPING TENSILE REINFORCEMENT). SEE SHEET 17 FOR UNDERDRAIN LAYOUT.
2. ALL MATERIALS NECESSARY FOR DRAINAGE BEHIND THE SPECIAL PROVISION (MECHANICALLY STABILIZED EARTH RETAINING WALL, VIST-A-WALL), INCLUDING, BUT NOT LIMITED TO, THE 6" PERFORATED PIPE, DRAINAGE AGGREGATE, AND GEOMEMBRANE LINER, WILL BE CONSIDERED INCIDENTAL TO ITEM 900.670, "SPECIAL PROVISION (MECHANICALLY STABILIZED EARTH RETAINING WALL, VIST-A-WALL)". SEE NOTES 31 AND 32 ON SHEET 10.
3. TENSILE REINFORCEMENT STRIP LENGTH VARIES AND WILL BE PROVIDED BY THE VIST-A-WALL MANUFACTURER.
4. ALL ATTACHMENT DEVICES AND FASTENERS WILL BE CONSIDERED INCIDENTAL TO ITEM 900.670, "SPECIAL PROVISION (MECHANICALLY STABILIZED EARTH RETAINING WALL, VIST-A-WALL)". SEE NOTE 23 ON SHEET 10.

* 1 THE MAXIMUM ANTICIPATED SETTLEMENT OF THE MSE BACKFILL IS 2.5 INCHES. THIS SETTLEMENT IS CONSIDERED TO BE UNIFORM ACROSS THE FOOTPRINT OF THE WALL AND SHOULD OCCUR WITHIN THE TIMEFRAME OF THE WALL INSTALLATION. PAY LIMITS FOR THE SELECT GRANULAR BACKFILL WILL BE AS SHOWN ON THE PLANS IRREGARDLESS OF ANY ANTICIPATED SETTLEMENT.

PROJECT NAME: ST. JOHNSBURY
PROJECT NUMBER: BF 7000(20)

FILE NAME: 86e048/cos/z86e048sub.dgn
PROJECT LEADER: J.BYATT
DESIGNED BY: A. GIRALDI
TYPICAL EARTHWORK SECTIONS SHEET 3
PLOT DATE: 11/30/2016
DRAWN BY: M.SMITH
CHECKED BY: S.BEAUMONT
SHEET 8 OF 70

CONSULTING ENGINEERS

MODEL: SUB04
CLD 14-0116

GENERAL

1. ALL MATERIALS AND CONSTRUCTION SHALL CONFORM TO THE STATE OF VERMONT AGENCY OF TRANSPORTATION STANDARD SPECIFICATIONS FOR CONSTRUCTION DATED 2011, AND THE AASHTO LRFD BRIDGE DESIGN SPECIFICATIONS, DATED 2014, AND THEIR LATEST REVISIONS.

2. ALL DIMENSIONS SHOWN IN THE PLANS ARE HORIZONTAL OR VERTICAL AND ARE GIVEN AT 68 DEGREES FAHRENHEIT, UNLESS NOTED OTHERWISE.

3. EMULSIFIED ASPHALT SHALL BE APPLIED TO ALL COLD PLANED SURFACES AT A RATE OF 0.080 GAL/SY AND BETWEEN EACH LIFT OF PAVEMENT AT A RATE OF 0.040 GAL/SY OR AS DIRECTED BY THE ENGINEER AND WILL BE PAID FOR UNDER ITEM 404.65, EMULSIFIED ASPHALT.

4. ANY REQUIRED SAWCUT OF EXISTING PAVEMENT WILL BE CONSIDERED INCIDENTAL TO THE WEARING COURSE PAY ITEM 900.680, "SPECIAL PROVISION (BITUMINOUS CONCRETE PAVEMENT, SMALL QUANTITY)".

5. THE CONTRACTOR SHALL BE MADE AWARE THAT EXISTING UTILITIES ARE WITHIN THE CONSTRUCTION LIMITS OF BRIDGE 6. THE UTILITIES WILL BE RELOCATED BY OTHERS PRIOR TO THE START OF CONSTRUCTION EXCEPT THE WATER LINE RUNNING PARALLEL TO THE NORTHERN WINGWALLS THAT WILL REMAIN IN PLACE FOR THE DURATION OF CONSTRUCTION. NO CLAIMS ARE MADE AS TO THE ACCURACY OR COMPLETENESS OF THE UTILITIES SHOWN. THE CONTRACTOR IS SOLELY RESPONSIBLE FOR LOCATING AND PROTECTING FROM DAMAGE ALL UTILITIES ON SITE DURING ALL STAGES OF CONSTRUCTION.

6. THE EXISTING WATER LINE RUNNING PARALLEL TO THE NORTHERN WINGWALLS WILL NEED TO BE TEMPORARILY SUPPORTED, PROTECTED, AND INSULATED DURING CONSTRUCTION. THE COST TO TEMPORARILY SUPPORT, PROTECT, AND INSULATE THE EXISTING WATER LINE WILL BE PAID FOR UNDER ITEM 900.645, "SPECIAL PROVISION (TEMPORARY SUPPORT OF WATER MAIN)".

GEOTECHNICAL INSTRUMENTATION AND SETTLEMENT:

7. GEOTECHNICAL/MONITORING INSTRUMENTATION SHALL BE PROVIDED, INSTALLED, AND MAINTAINED BY THE CONTRACTOR DURING CONSTRUCTION AS SHOWN ON PLAN SHEET 32. THE INSTRUMENTATION WILL BE PAID FOR UNDER ITEM 900.620, "SPECIAL PROVISION (SETTLEMENT PLATFORM, TYPE I)", ITEM 900.620, "SPECIAL PROVISION (SETTLEMENT PLATFORM, TYPE IV)", OR ITEM 900.620, "SPECIAL PROVISION (PIEZOMETER, VIBRATING WIRE)", AS APPROPRIATE.

EARTHWORK

8. REMOVAL OF THE EXISTING STRUCTURE WILL BE PAID FOR UNDER ITEM 529.15, "REMOVAL OF STRUCTURE". THIS WORK SHALL INCLUDE REMOVAL OF ANY PORTIONS OF THE EXISTING STRUCTURE, INCLUDING THE SUPERSTRUCTURE, ABUTMENTS, PIERS, WINGWALLS, AND RETAINING WALLS THAT FALL OUTSIDE THE LIMIT OF STRUCTURE EXCAVATION. ALL EXISTING STRUCTURAL ELEMENTS INCLUDING THE ABUTMENTS AND PIERS SHALL BE REMOVED IN THEIR ENTIRETY.

9. ALL EXCAVATION AND BACKFILLING SHALL BE CONDUCTED IN DRY CONDITIONS. DEWATERING SHALL BE CONTINUOUS UNTIL THE GALVANIZED STEEL STRUCTURAL PLATE STRUCTURE, WINGWALLS, AND RETAINING WALL ARE BACKFILLED TO THE SURROUNDING WATER TABLE, UNLESS OTHERWISE NOTED. WATER IS EVIDENT AT THE PROJECT SITE AND ADEQUATE WATER CONTROL WILL BE REQUIRED.

MISCELLANEOUS

10. ALL STEEL COMPONENTS OF BRIDGE RAILING, APPROACH RAILING, AND GUARDRAIL SHALL BE GALVANIZED IN ACCORDANCE WITH THE STANDARD SPECIFICATIONS. COMPONENTS SHALL BE POWDER COATED BLACK IN ACCORDANCE WITH ASTM D 7803 WITH TYPE A CERTIFICATION.

CONCRETE AND REINFORCING STEEL

11. ITEM 514.10, "WATER REPELLENT, SILANE", SHALL BE APPLIED TO ALL EXPOSED CONCRETE SURFACES TO 1'-0" BELOW GRADE EXCEPT THE PATTERNED FACES OF THE VIST-A-WALLS PER NOTE 29 ON SHEET 10. THIS WORK WILL BE PAID FOR UNDER ITEM 514.10, "WATER REPELLENT, SILANE".

12. ALL EXPOSED EDGES OF CONCRETE SHALL BE CHAMFERED 1" X 1", UNLESS OTHERWISE NOTED.

13. MINIMUM CLEAR COVER FOR REINFORCING STEEL SHALL BE AS FOLLOWS:
    a. CAST AGAINST EARTH: 3.0 INCH
    b. EXPOSURE TO DEICING SALTS 3.0 INCH
    c. WALL FACES NOT EXPOSED TO DEICING SALTS: 2.0 INCH
    d. ELSEWHERE UNLESS OTHERWISE INDICATED: 3.0 INCH

14. TEST BARS SHALL BE PROVIDED IN ACCORDANCE WITH THE "VERMONT AGENCY OF TRANSPORTATION MATERIALS SAMPLING MANUAL" AVAILABLE ON THE AGENCY WEBSITE.

STRUCTURAL ELEMENTS

15. THE PROJECT SHALL UTILIZE THE BIG R BRIDGE SUPER COR DEEP CORRUGATED STRUCTURAL PLATE BURIED ARCH FOR THE BRIDGE REPLACEMENT AND THE BIG R BRIDGE VIST-A-WALL SYSTEM FOR THE WINGWALLS AND DRIVE RETAINING WALL. SEE THE BIG R BRIDGE SUPER COR ARCH AND VIST-A-WALL PLANS INCLUDED FOR REFERENCE AT THE BACK OF THE CONTRACT PLANS.

16. THE CONTRACTOR SHALL PROVIDE EQUIPMENT CAPABLE OF UNLOADING, LIFTING, AND PLACING STRUCTURAL PLATES AND VIST-A-WALL ELEMENTS IN ACCORDANCE WITH THE INFORMATION PROVIDED BY BIG R BRIDGE, AND THE PRECAST CONCRETE ELEMENTS IN ACCORDANCE WITH THE PRECAST CONCRETE MANUFACTURER'S REPRESENTATIVE. COST WILL BE CONSIDERED INCIDENTAL TO ITEM 900.645, "SPECIAL PROVISION (CORRUGATED STEEL BURIED BRIDGE, 47'-11" X 26'-9" X 40'-3") (SUPER COR ARCH)", ITEM 900.670, "SPECIAL PROVISION (MECHANICALLY STABILIZED EARTH RETAINING WALL, VIST-A-WALL)", OR THE APPLICABLE PRECAST CONCRETE PAY ITEM, AS APPROPRIATE.

17. THE CONTRACTOR SHALL FOLLOW BIG R BRIDGE RECOMMENDATIONS REGARDING BACKFILL AND COMPACTION LIMITS, PROPERTIES, AND PROCEDURES, INCLUDING RESTRICTIONS OF CONSTRUCTION MACHINERY AND OPERATIONS.

18. ANY DAMAGE TO THE STRUCTURAL PLATES, VIST-A-WALL ELEMENTS, OR PRECAST CONCRETE ELEMENTS DUE DIRECTLY TO THE CONTRACTOR'S OPERATIONS SHALL BE REPAIRED AS DIRECTED BY THE ENGINEER AT NO ADDITIONAL COST TO THE STATE.

18A. THE STEEL FRAMING IN THE EXISTING BRIDGE IS PAINTED WITH A MATERIAL WHICH MAY CONTAIN LEAD. THE CONTRACTOR SHALL FOLLOW ALL APPLICABLE REGULATIONS WHEN HANDLING AND WORKING WITH THIS STEEL. THE REMOVED STRUCTURAL STEEL IS THE PROPERTY OF THE CONTRACTOR. THE CONTRACTOR SHALL INDEMNIFY AND HOLD THE STATE AND ITS OFFICERS AND EMPLOYEES HARMLESS CONCERNING THE CONTRACTOR'S USE OR DISPOSAL OF THE REMOVED EXISTING STRUCTURAL STEEL. (2)

REVISION	DATE	DESCRIPTION	BY
2	12-05-2016	ADD NOTE	SRB

STRUCTURAL ELEMENT	CONCRETE		REINFORCING STEEL	
	CONTRACT ITEM:	TO MEET THE REQUIREMENTS FOR:	TO MEET THE REQUIREMENTS FOR:	PAYMENT TO BE INCLUDED IN:
PRECAST CONCRETE RAIL SUPPORT SLABS*	ITEM 540.10, "PRECAST CONCRETE STRUCTURE (RAIL SUPPORT SLAB)" OR ITEM 900.645, "SPECIAL PROVISION (CONTRACTOR-FABRICATED PRECAST CONCRETE STRUCTURE) (RAIL SUPPORT SLAB)" (OPTION ITEM)	SECTION 540	REINFORCING STEEL, LEVEL I EPOXY COATED	ITEM 540.10, "PRECAST CONCRETE STRUCTURE (RAIL SUPPORT SLAB)" OR ITEM 900.645, "SPECIAL PROVISION (CONTRACTOR-FABRICATED PRECAST CONCRETE STRUCTURE) (RAIL SUPPORT SLAB)" (OPTION ITEM)
PRECAST CONCRETE CAPS*	ITEM 540.10, "PRECAST CONCRETE STRUCTURE (WALL CAP)" OR ITEM 900.645, "SPECIAL PROVISION (CONTRACTOR-FABRICATED PRECAST CONCRETE STRUCTURE) (WALL CAP)" (OPTION ITEM)	SECTION 540	REINFORCING STEEL, LEVEL I EPOXY COATED	ITEM 540.10, "PRECAST CONCRETE STRUCTURE (WALL CAP)" OR ITEM 900.645, "SPECIAL PROVISION (CONTRACTOR-FABRICATED PRECAST CONCRETE STRUCTURE) (WALL CAP)" (OPTION ITEM)
CAST-IN-PLACE CONCRETE ARCH COLLAR & ARCH COLLAR/WALL CAP COMBINATION	ITEM 501.33, "CONCRETE, HIGH PERFORMANCE CLASS A"	CONCRETE, HIGH PERFORMANCE CLASS A	REINFORCING STEEL, LEVEL I EPOXY COATED	ITEM 507.11, "REINFORCING STEEL, LEVEL I"
PRECAST CONCRETE SPREAD FOOTINGS*	ITEM 540.10, "PRECAST CONCRETE STRUCTURE (SPREAD FOOTING)" OR ITEM 900.645, "SPECIAL PROVISION (CONTRACTOR-FABRICATED PRECAST CONCRETE STRUCTURE) (SPREAD FOOTING)" (OPTION ITEM)	SECTION 540	REINFORCING STEEL, LEVEL I	ITEM 540.10, "PRECAST CONCRETE STRUCTURE (SPREAD FOOTING)" OR ITEM 900.645, "SPECIAL PROVISION (CONTRACTOR-FABRICATED PRECAST CONCRETE STRUCTURE) (SPREAD FOOTING)" (OPTION ITEM)
BRIDGE RAILING, GALVANIZED STEEL TUBING/CONCRETE COMBINATION (COATED BLACK)	ITEM 525.45, "BRIDGE RAILING, GALVANIZED STEEL TUBING/CONCRETE COMBINATION (COATED BLACK)"	SECTION 525	REINFORCING STEEL, LEVEL III	ITEM 525.45, "BRIDGE RAILING, GALVANIZED STEEL TUBING/CONCRETE COMBINATION (COATED BLACK)"

* ALL PRECAST CONCRETE ELEMENTS SHALL BE FABRICATED TO THE SPECIFIED DIMENSIONS WITHIN THE TOLERANCES DICTATED IN THE PRECAST/PRESTRESSED CONCRETE INSTITUTE TOLERANCE MANUAL FOR PRECAST AND PRESTRESSED CONCRETE CONSTRUCTION, MNL 135-00, AND ITS LATEST REVISIONS.

CLD 14-0116 MODEL: Sheet01

CONSULTING ENGINEERS

PROJECT NAME: ST. JOHNSBURY
PROJECT NUMBER: BF 7000(20)

FILE NAME: 86e048/cos/z86e048gennotes.dgn PLOT DATE: 11/30/2016
PROJECT LEADER: J. BYATT DRAWN BY: M. SMITH
DESIGNED BY: S. BEAUMONT CHECKED BY: A. GIRALDI
PROJECT NOTES SHEET 1 SHEET 9 OF 70

CORRUGATED STEEL BURIED BRIDGE SYSTEM

19. ITEM 900.645, "SPECIAL PROVISION (CORRUGATED STEEL BURIED BRIDGE, 47'-11" X 26'-9" X 40'-3") (SUPER COR ARCH)" WILL INCLUDE ALL MATERIALS AND HARDWARE NECESSARY TO ASSEMBLE THE STRUCTURAL PLATE ARCH IN ITS ENTIRETY, INCLUDING, BUT NOT LIMITED TO:
    A. STRUCTURAL STEEL PLATES AND RIBS
    B. GALVANIZING
    C. ATTACHMENT DEVICES AND FASTENERS
    D. THE DRAIN SYSTEM ON EITHER SIDE OF THE ARCH FOOTINGS

20. DESIGN AND DETAILING OF THE SUPER COR ARCH AND ALL DETAILS, APPURTENANCES, AND CONNECTIONS FOR THE ARCH, INCLUDING THE CONNECTION BETWEEN THE ARCH AND CAST-IN-PLACE CONCRETE COLLAR, SHALL BE THE CONTRACTOR'S RESPONSIBILITY. BIG R BRIDGE SHALL PROVIDE STAMPED DESIGN CALCULATIONS PREPARED BY A REGISTERED VERMONT PROFESSIONAL ENGINEER. BIG R BRIDGE SHALL CONSIDER STRENGTH, SERVICEABILITY, AND STABILITY OF THE STEEL PLATE ARCH ELEMENTS FOR LOADS GENERATED DURING FABRICATION, TRANSPORTATION, ERECTION, CONSTRUCTION OPERATIONS, AND ULTIMATE TRAFFIC CONDITIONS. THE DESIGN SHALL INCLUDE A LOAD RATING COMPLETED USING THE LOAD AND RESISTANCE FACTOR RATING METHOD AND CONFORMING TO STANDARD VTRANS PRACTICE. ALL COSTS WILL BE CONSIDERED INCIDENTAL TO ITEM 900.645, "SPECIAL PROVISION (CORRUGATED STEEL BURIED BRIDGE, 47'-11" X 26'-9" X 40'-3") (SUPER COR ARCH)".

21. THE CORRUGATED STEEL ARCH SHALL BE DESIGNED PER THE AASHTO LRFD BRIDGE DESIGN SPECIFICATIONS, DATED 2014, AND ITS LATEST REVISIONS, AND SHALL CONSIDER THE FOLLOWING DESIGN CRITERIA:
    A. DESIGN LOADING: HL-93
    B. WEIGHT OF BACKFILL MATERIAL: 140 PCF

22. A 6" DIAMETER PERFORATED PVC DRAIN PIPE CONFORMING TO THE REQUIREMENTS OF SECTION 605 SHALL BE INSTALLED BEHIND THE ARCH WALLS JUST ABOVE THE FOOTING HEELS AND SHALL OUTLET THROUGH THE PRECAST CONCRETE WALL PANELS ON EITHER SIDE OF THE ROAD. NO WEEPHOLES SHALL BE PROVIDED THROUGH THE CORRUGATED STEEL ARCH. THESE DRAIN PIPES SHALL BE PLACED WITHIN A MINIMUM 30" THICK ZONE OF DRAINAGE AGGREGATE CONFORMING TO SUBSECTION 704.16. STONE SHALL BE COMPLETELY SEPARATED FROM THE IN SITU SOILS BY GEOTEXTILE CONFORMING TO THE REQUIREMENTS OF SECTION 649, GEOTEXTILE FOR ROADBED SEPARATOR. PERFORATED PVC PIPE SHALL BE LAID WITH PERFORATIONS DOWN. THIS WORK AND MATERIALS WILL BE CONSIDERED INCIDENTAL TO ITEM 900.645, "SPECIAL PROVISION (CORRUGATED STEEL BURIED BRIDGE, 47'-11" X 26'-9" X 40'-3") (SUPER COR ARCH)".

VIST-A-WALL RETAINING WALL SYSTEM

23. ITEM 900.670, "SPECIAL PROVISION (MECHANICALLY STABILIZED EARTH RETAINING WALL, VIST-A-WALL)" SHALL INCLUDE ALL MATERIALS AND HARDWARE NECESSARY TO INSTALL THE VIST-A-WALL WINGWALLS AND DRIVE RETAINING WALL IN THEIR ENTIRETY, INCLUDNG, BUT NOT LIMITED TO:
    A. SELECT GRANULAR BACKFILL
    B. PRECAST CONCRETE WALL PANELS
    C. CAST-IN-PLACE CONCRETE LEVELING PAD
    D. TENSILE REINFORCEMENT
    E. ARCHITECTURAL PATTERN
    F. ATTACHMENT DEVICES AND FASTENERS
    G. 6" PERFORATED PIPE (WRAPPED WITH GEOTEXTILE)
    H. DRAINAGE AGGREGATE
    I. GEOMEMBRANE LINER

24. THE DESIGN, INTERNAL STABILITY, AND DETAILING OF THE WINGWALLS, DRIVE RETAINING WALL, TENSILE REINFORCEMENT, CONCRETE FACING PANELS, LEVELING PAD, GEOMEMBRANE LINER, PERFORATED PIPE, AND DRAINAGE AGGREGATE SHALL BE THE CONTRACTOR'S RESPONSIBILITY. BIG R BRIDGE SHALL PROVIDE STAMPED DESIGN CALCULATIONS PREPARED BY A REGISTERED VERMONT PROFESSIONAL ENGINEER. BIG R BRIDGE SHALL CONSIDER STRENGTH, SERVICEABILITY, AND STABILITY OF THE VIST-A-WALL ELEMENTS FOR LOADS GENERATED DURING FABRICATION, TRANSPORTATION, ERECTION, CONSTRUCTION OPERATIONS, AND ULTIMATE TRAFFIC CONDITIONS. ALL COSTS WILL BE CONSIDERED INCIDENTAL TO ITEM 900.670, "SPECIAL PROVISION (MECHANICALLY STABILIZED EARTH RETAINING WALL, VIST-A-WALL)".

VIST-A-WALL RETAINING WALL SYSTEM (CONTINUED)

25. VIST-A-WALL LAYOUT AND DIMENSIONS ARE REFERENCED TO THE FRONT FACE OF THE WALL PANEL AS DEFINED BY THE 5½" THICKNESS.

26. DIMENSIONS FOR THE REINFORCED SOIL ZONE SHALL BE PROVIDED BY BIG R BRIDGE. THE CONTRACTOR SHALL BE RESPONSIBLE TO COORDINATE CHANGES TO OTHER COMPONENTS AND DIMENSIONS TO FIT THE VIST-A-WALL DESIGN.

27. THE VIST-A-WALL SYSTEM, INCLUDING ALL CAST-IN-PLACE AND PRECAST CONCRETE ELEMENTS, SHALL BE DESIGNED PER THE AASHTO LRFD BRIDGE DESIGN SPECIFICATIONS, DATED 2014, AND ITS LATEST REVISIONS, AND CONSIDER THE FOLLOWING DESIGN CRITERIA:
    A. DESIGN LOADING: HL-93
    B. PRECAST CONCRETE COMPRESSIVE STRENGTH: f'c = 5,000 PSI
    C. CAST-IN-PLACE CONCRETE COMPRESSIVE STRENGTH: f'c = 3,500 PSI
    D. REINFORCING STEEL, LEVEL I: fy = 60,000 PSI
    E. EXISTING IN-SITU SOIL PROPERTIES:

MATERIAL	DENSITY (pcf)	INTERNAL SOIL FRICTION ANGLE (deg)	NOMINAL BEARING RESISTANCE, qn (Ksf) *
ABUTMENT 1 SANDY SILT DEPOSITS	100	29	6.7
ABUTMENT 2 SILTY SAND DEPOSITS	100	30	4.1
DRIVE RETAINING WALL SILT DEPOSITS	105	29	4.3

* ALL NOMINAL BEARING RESISTANCES CORRESPOND TO 2.5 INCHES OF SETTLEMENT.

F. FILL MATERIAL PROPERTIES:

MATERIAL	DENSITY (pcf)	INTERNAL SOIL FRICTION ANGLE (deg)	ACTIVE EARTH PRESSURE COEFFICIENT, Ka
GRANULAR BORROW	130	32	0.31
SELECT GRANULAR BACKFILL		34	0.28

28. EXPOSED VIST-A-WALL PANELS SHALL HAVE A PATTERN AS SHOWN ON THE PLANS. THE FORM LINER SHALL BE AS SPECIFIED IN THE SPECIAL PROVISIONS, AND SHALL EXTEND A MINIMUM OF 1'-0" BELOW THE PROPOSED GRADE AT THE FACE OF THE WALL. THE COST OF THE FORM LINER WILL BE CONSIDERED INCIDENTAL TO ITEM 900.670, "SPECIAL PROVISION (MECHANICALLY STABILIZED EARTH RETAINING WALL, VIST-A-WALL)".

29. AN ACRYLIC GRAY TINT STAIN AND SEALANT SYSTEM SHALL BE FIELD APPLIED TO ALL VIST-A-WALL PANEL SURFACES WITH THE PATTERN. THE COST OF THE STAIN WILL BE PAID FOR UNDER ITEM 900.625, "SPECIAL PROVISION (CONCRETE STAINING AND SEALING)". THE SEALANT WILL BE CONSIDERED INCIDENTAL TO ITEM 900.625, "SPECIAL PROVISION (CONCRETE STAINING AND SEALING)".

30. LOCATIONS OF DRIVEN POSTS BEHIND THE WALL SHALL BE DETERMINED IN THE FIELD PER THE PLANS, AND 12" SONO TUBES SHALL BE PLACED AT THE POST LOCATIONS DURING BACKFILL OPERATIONS. TENSILE REINFORCING STRIPS SHALL BE LAID AROUND THE SONO TUBES. THIS WORK WILL BE CONSIDERED INCIDENTAL TO ITEM 900.670, "SPECIAL PROVISION (MECHANICALLY STABILIZED EARTH RETAINING WALL, VIST-A-WALL)".

31. A GEOMEMBRANE LINER, 30 MILS THICK, SHALL BE PROVIDED WITHIN THE VIST-A-WALL REINFORCED SOIL ZONE AREAS AS DETAILED ON THE PLANS AND SPECIFIED IN THE SPECIAL PROVISIONS AND SHALL EXTEND OVER THE TOP OF THE ARCH STRUCTURE. PRIOR TO PLACING THE GEOMEMBRANE LINER, THE SUBGRADE SHALL BE GRADED SMOOTH WITH NO IRREGULARITIES OR STONE PROTUSIONS. GEOMEMBRANE LINER SHALL BE LOCATED A MINIMUM OF 6" BELOW BOTTOM OF GUARDRAIL POSTS TO AVOID DAMAGE DURING INSTALLATION OF THE POSTS. LIMITS OF GEOMEMBRANE LINER SHALL EXTEND 5'-0" BEYOND THE END OF THE VIST-A-WALL.

VIST-A-WALL RETAINING WALL SYSTEM (CONTINUED)

32. A DRAIN SYSTEM SHALL BE PROVIDED AND CONSIST OF A 6" DIAMETER PERFORATED PVC DRAIN PIPE CONFORMING TO THE REQUIREMENTS OF SECTION 605 WRAPPED IN GEOTEXTILE CONFORMING TO THE REQUIREMENTS OF SECTION 649, GEOTEXTILE FOR ROADBED SEPARATOR. A 6" LAYER OF DRAINAGE AGGREGATE CONFORMING TO SUBSECTION 704.16 SHALL BE PLACED OVER THE GEOMEMBRANE LINER. SEE SHEET 17 FOR LAYOUT OF 6" DIAMETER PERFORATED PIPE DRAIN. ALL PIPE, INCLUDING SECTIONS OF CARRIER PIPE BEYOND THE LIMITS OF THE RETAINING WALL, WILL BE CONSIDERED INCIDENTAL TO ITEM 900.670, "SPECIAL PROVISION (MECHANICALLY STABILIZED EARTH RETAINING WALL, VIST-A-WALL)", ALONG WITH ANY ASSOCIATED EXCAVATION.

33. THE DRILLING OF HOLES IN THE PRECAST CONCRETE ELEMENTS SHALL NOT BE PERMITTED UNLESS APPROVED IN WRITING BY THE VERMONT AGENCY OF TRANSPORTATION STRUCTURES SECTION. ANY LIFTING HOLES SHALL BE FILLED WITH MORTAR, TYPE IV CONFORMING TO THE REQUIREMENTS OF SUBSECTION 707.03. COST FOR MORTAR WILL BE CONSIDERED INCIDENTAL TO ITEM 900.670, "SPECIAL PROVISION (MECHANICALLY STABILIZED EARTH RETAINING WALL, VIST-A-WALL)".

34. A 6" DIAMETER WEEPHOLE SHALL BE PROVIDED THROUGH THE FACE OF THE VIST-A-WALL PANELS AT THE FOUR CORNERS OF THE ARCH STRUCTURE TO OUTLET THE 6" PERFORATED PIPE RUNNING PARALLEL TO THE PROPOSED ARCH ABOVE THE FOOTING. COST SHALL BE INCIDENTAL TO ITEM 900.670, "SPECIAL PROVISION (MECHANICALLY STABILIZED EARTH RETAINING WALL, VIST-A-WALL)".

PRECAST CONCRETE ELEMENTS

35. AS DETAILED ON THE QUANTITY SUMMARY SHEETS ON SHEETS 11-13, THE PRECAST CONCRETE RAIL SUPPORT SLABS, WALL CAPS, AND SPREAD FOOTINGS ARE OPTION ITEMS. THE CONTRACTOR SHALL CHOOSE EITHER CONTRACT ITEM 540.10, "PRECAST CONCRETE STRUCTURE" FOR ALL OPTIONS OR CONTRACT ITEM 900.645, "SPECIAL PROVISION (CONTRACTOR-FABRICATED PRECAST CONCRETE STRUCTURE)" FOR ALL OPTIONS. MIXING OPTION ITEMS SHALL NOT BE ALLOWED.

REVISION	DATE	DESCRIPTION	BY
1	11-23-2016	MODIFY NOTE	SRB

36. DESIGN VALUES:
    A. DESIGN LOADING: HL-93
    B. WEIGHT OF BACKFILL MATERIAL: 140 PCF
    C. PRECAST CONCRETE COMPRESSIVE STRENGTH: f'c = 5,000 PSI
    E. REINFORCING STEEL, LEVEL I: fy = 60,000 PSI
    F. SEE NOTES 27E. AND 27F. FOR NOMINAL BEARING RESISTANCES

37. 1 THE PRECAST CONCRETE MANUFACTURER IS RESPONSIBLE FOR THE DESIGN OF THE PRECAST CONCRETE ELEMENTS, CONSIDERING STRENGTH, SERVICEABILITY, STIFFNESS, AND STABILITY, FOR LOADS GENERATED DURING FABRICATION, TRANSPORTATION, ERECTION, AND CONSTRUCTION OPERATIONS, AS WELL AS THE DESIGN AND LOCATION OF THE LIFTING POINTS. THE MANUFACTURER SHALL OBTAIN WRITTEN APPROVAL FROM THE VERMONT AGENCY OF TRANSPORTATION STRUCTURE SECTION PRIOR TO FABRICATION.

38. THE COST OF ALL REINFORCING BARS THAT ARE CAST INTO THE PRECAST CONCRETE ELEMENTS WILL BE INCLUDED IN THE APPROPRIATE PRECAST CONCRETE PAY ITEM.

39. THE CONCRETE FOR THE RAIL SUPPORT SLAB CLOSURE POURS SHALL CONFORM TO THE REQUIREMENTS OF ITEM 900.608, "SPECIAL PROVISION (HIGH PERFORMANCE CONCRETE, RAPID SET) (FPQ).

40. THE DRILLING OF HOLES IN THE PRECAST CONCRETE ELEMENTS SHALL NOT BE PERMITTED, UNLESS APPROVED IN WRITING BY THE VERMONT AGENCY OF TRANSPORTATION STRUCTURES SECTION. ANY LIFTING HOLES SHALL BE FILLED WITH MORTAR, TYPE IV CONFORMING TO THE REQUIREMENTS OF SUBSECTION 707.03. COST FOR MORTAR WILL BE CONSIDERED INCIDENTAL TO THE APPROPRIATE PRECAST CONCRETE PAY ITEM.

CONSULTING ENGINEERS

PROJECT NAME: ST. JOHNSBURY
PROJECT NUMBER: BF 7000(20)

FILE NAME: 86e048/cos/z86e048gennotes.dgn PLOT DATE: 11/22/2016
PROJECT LEADER: J. BYATT DRAWN BY: M. SMITH
DESIGNED BY: S. BEAUMONT CHECKED BY: A. GIRALDI
PROJECT NOTES SHEET 2 SHEET 10 OF 70

CLD 14-0116 MODEL: Sheet02

STATE OF VERMONT
AGENCY OF TRANSPORTATION

QUANTITY SHEET 1

| SUMMARY OF ESTIMATED QUANTITIES | | |

STATE OF VERMONT
AGENCY OF TRANSPORTATION

QUANTITY SHEET 2

SUMMARY OF ESTIMATED QUANTITIES									TOTALS		DESCRIPTIONS				DETAILED SUMMARY OF QUANTITIES		
						ROADWAY	EROSION CONTROL	BRIDGE NO. 6	FULL C.E. ITEMS	GRAND TOTAL	FINAL	UNIT	ITEMS	ITEM NUMBER	ROUND	QUANTITIES	UNIT	ITEMS
													BEGIN OPTION DD					
						50				50		LF	PRECAST REINFORCED CONCRETE CURB, TYPE B	616.26	-			
						50				50		LF	CAST-IN-PLACE CONCRETE CURB, TYPE B	616.28	-			
													END OPTION DD					
						1				1		EACH	RELOCATE MAILBOX, MULTIPLE SUPPORT	617.12	-			
						3				3		EACH	YIELDING MARKER POSTS	619.17	-			
						380				380		LF	BOX BEAM GUARDRAIL (COATED BLACK)	621.30	2			
						2				2		EACH	MANUFACTURED TERMINAL SECTION, TANGENT (COATED BLACK)	621.51	-			
								4		4		EACH	GUARDRAIL APPROACH SECTION, GALVANIZED 2 RAIL BOX BEAM (COATED BLACK)	621.72	-			
						400				400		LF	REMOVAL AND DISPOSAL OF GUARDRAIL	621.80	8			
						1				1		MFBM	INSULATION BOARD	622.10	-			
						50				50		LF	SEAMLESS COPPER WATER TUBE (3/4")	629.23	EST.			
						1				1		EACH	EXTENSION SERVICE BOX AND CURB STOP (3/4")	629.25	-			
						100				100		HR	UNIFORMED TRAFFIC OFFICERS	630.10	EST.			
						300				300		HR	FLAGGERS	630.15	EST.			
									1	1		LS	FIELD OFFICE, ENGINEERS	631.10	-			
									1	1		LS	TESTING EQUIPMENT, CONCRETE	631.16	-			
									1	1		LS	TESTING EQUIPMENT, BITUMINOUS	631.17	-			
									3000	3000		DL	FIELD OFFICE TELEPHONE (N.A.B.I.)	631.26	-			
						1				1		LS	MOBILIZATION/DEMOBILIZATION	635.11	-			
						4				4		EACH	PORTABLE CHANGEABLE MESSAGE SIGN	641.15	-			
						950				950		LF	DURABLE 4 INCH WHITE LINE, POLYUREA	646.404	-			
						950				950		LF	DURABLE 4 INCH YELLOW LINE, POLYUREA	646.414	-			
						950				950		LF	TEMPORARY 4 INCH WHITE LINE, PAINT	646.602	-			
						950				950		LF	TEMPORARY 4 INCH YELLOW LINE, PAINT	646.612	-			
						150				150		EACH	LINE STRIPING TARGETS	646.76	3			
						1975				1975		SY	GEOTEXTILE UNDER STONE FILL	649.31	4.1			
							110			110		SY	GEOTEXTILE FOR SILT FENCE	649.51	1			
							20			20		LB	SEED	651.15	1.4			
							40			40		LB	FERTILIZER	651.18	5			
							0.5			0.5		TON	AGRICULTURAL LIMESTONE	651.20	0.4			
							0.5			0.5		TON	HAY MULCH	651.25	0.4			
						45				45		CY	TOPSOIL	651.35	3.1			
						1575				1575		SY	GRUBBING MATERIAL	651.40	9.5			
							1			1		LS	EPSC PLAN	652.10	-			
							40			40		HR	MONITORING EPSC PLAN	652.20	-			
							1			1		LU	MAINTENANCE OF EPSC PLAN (N.A.B.I.)	652.30	-			
							175			175		SY	TEMPORARY EROSION MATTING	653.20	22			
							5			5		CY	TEMPORARY STONE CHECK DAM, TYPE I	653.25	EST.			
							15			15		CY	VEHICLE TRACKING PAD	653.35	EST.			

CLD 14-0116 MODEL: ROAD QUANTITY 02

CONSULTING ENGINEERS

PROJECT NAME: ST. JOHNSBURY
PROJECT NUMBER: BF 7000(20)

FILE NAME: 86e048/cos/z86e048frm.dgn
PROJECT LEADER: J.BYATT
DESIGNED BY: M.HALEY
QUANTITY SHEET 2

PLOT DATE: 10/26/2016
DRAWN BY: W.GORDON
CHECKED BY: P.SHEDD
SHEET 12 OF 70

STATE OF VERMONT
AGENCY OF TRANSPORTATION

QUANTITY SHEET 3

SUMMARY OF ESTIMATED QUANTITIES

ROADWAY	EROSION CONTROL	BRIDGE NO. 6	FULL C.E. ITEMS	GRAND TOTAL	FINAL	UNIT	ITEMS	ITEM NUMBER	ROUND
	1			1		EACH	INLET PROTECTION DEVICE, TYPE I	653.40	-
	1			1		EACH	FILTER BAG	653.45	-
	825			825		LF	PROJECT DEMARCATION FENCE	653.55	9
8				8		SF	TRAFFIC SIGNS, TYPE A	675.20	0.91
75				75		LF	SQUARE TUBE SIGN POST AND ANCHOR	675.341	-
8				8		EACH	REMOVING SIGNS	675.50	-
2				2		EACH	ERECTING SALVAGED SIGNS	675.60	-
4				4		EACH	DELINEATOR WITH STEEL POST	676.10	-
1				1		EACH	REMOVAL OF EXISTING DELINEATOR	676.12	-
1				1		LU	PRICE ADJUSTMENT, FUEL (N.A.B.I.)	690.50	-
3				3		CY	SPECIAL PROVISION (AGGREGATE SURFACE COURSE, SIDEWALK/TRAIL)	900.608	0.97
		17		17		CY	SPECIAL PROVISION (HIGH PERFORMANCE CONCRETE, RAPID SET) (FPQ)	900.608	0.19
105000				105000		DL	SPECIAL PROVISION (INCENTIVE/DISINCENTIVE) (N.A.B.I.)	900.615	-
3				3		EACH	SPECIAL PROVISION (CPM SCHEDULE)	900.620	-
		2		2		EACH	SPECIAL PROVISION (GROUND WATER OBSERVATION WELL)	900.620	-
		2		2		EACH	SPECIAL PROVISION (PIEZOMETER, VIBRATING WIRE)	900.620	-
		3		3		EACH	SPECIAL PROVISION (SETTLEMENT PLATFORM, TYPE I)	900.620	-
		2		2		EACH	SPECIAL PROVISION (SETTLEMENT PLATFORM, TYPE IV)	900.620	-
		20		20		GAL	SPECIAL PROVISION (CONCRETE STAINING AND SEALING)	900.625	0.44
		1		1		LS	SPECIAL PROVISION (CORRUGATED STEEL BURIED BRIDGE, 47'-11" X 26'-9" X 40'-3") (SUPER COR ARCH)	900.645	-
		1		1		LS	SPECIAL PROVISION (TEMPORARY SUPPORT OF WATER MAIN)	900.645	-
1				1		LS	SPECIAL PROVISION (TRAFFIC CONTROL, ALL-INCLUSIVE)	900.645	-
1				1		LU	SPECIAL PROVISION (MAT DENSITY PAY ADJUSTMENT, SMALL QUANTITY) (N.A.B.I.)	900.650	-
1				1		LU	SPECIAL PROVISION (MIXTURE PAY ADJUSTMENT) (N.A.B.I.)	900.650	-
		5669		5669		SF	SPECIAL PROVISION (MECHANICALLY STABILIZED EARTH RETAINING WALL, VIST-A-WALL)	900.670	-
115				115		SY	SPECIAL PROVISION (HAND-PLACED BITUMINOUS CONCRETE MATERIAL, DRIVES)	900.675	2
400				400		TON	SPECIAL PROVISION (BITUMINOUS CONCRETE PAVEMENT, SMALL QUANTITY)	900.680	24

DETAILED SUMMARY OF QUANTITIES

QUANTITIES	UNIT	ITEMS
		SPECIAL PROVISION (BITUMINOUS CONCRETE PAVEMENT, SMALL QUANTITY)
135	TON	TYPE IIIS
241	TON	TYPE IVS
376	TON	SUBTOTAL
24	TON	ROUNDING
400	TON	TOTAL

CLD 14-0116 MODEL: ROAD QUANTITY 03

CONSULTING ENGINEERS

PROJECT NAME: ST. JOHNSBURY
PROJECT NUMBER: BF 7000(20)

FILE NAME: 86e048/cos/z86e048frm.dgn
PROJECT LEADER: J.BYATT
DESIGNED BY: M.HALEY
QUANTITY SHEET 3

PLOT DATE: 10/26/2016
DRAWN BY: W.GORDON
CHECKED BY: P.SHEDD
SHEET 13 OF 70

GENERAL INFORMATION

SYMBOLOGY LEGEND NOTE

THE SYMBOLOGY ON THIS SHEET IS INTENDED TO COVER STANDARD CONVENTIONAL SYMBOLOGY. THE SYMBOLOGY IS USED FOR EXISTING & PROPOSED FEATURES WITH HEAVIER LINEWEIGHT, IN COMBINATION WITH PROJECT ANNOTATION, AS NOTED ON PROJECT PLAN SHEETS. THIS LEGEND SHEET COVERS THE BASICS. SYMBOLOGY ON PLANS MAY VARY, PLAN ANNOTATIONS AND NOTES SHOULD BE USED TO CLARIFY AS NEEDED.

R.O.W. ABBREVIATIONS (CODES) & SYMBOLS

POINT	CODE	DESCRIPTION
	CH	CHANNEL EASEMENT
	CONST	CONSTRUCTION EASEMENT
	CUL	CULVERT EASEMENT
	D&C	DISCONNECT & CONNECT
	DIT	DITCH EASEMENT
	DR	DRAINAGE EASEMENT
	DRIVE	DRIVEWAY EASEMENT
	EC	EROSION CONTROL
	HWY	HIGHWAY EASEMENT
	I&M	INSTALL & MAINTAIN EASEMENT
	LAND	LANDSCAPE EASEMENT
	R&RES	REMOVE & RESET
	R&REP	REMOVE & REPLACE
	SR	SLOPE RIGHT
	UE	UTILITY EASEMENT
	(P)	PERMANENT EASEMENT
	(T)	TEMPORARY EASEMENT
■	BNDNS	BOUND SET
▣	BNDNS	BOUND TO BE SET
●	IPNS	IRON PIN SET
◎	IPNS	IRON PIN TO BE SET
⊠	CALC	EXISTING ROW POINT
○	PROW	PROPOSED ROW POINT
[LENGTH]		LENGTH CARRIED ON NEXT SHEET

COMMON TOPOGRAPHIC POINT SYMBOLS

POINT	CODE	DESCRIPTION
	APL	BOUND APPARENT LOCATION
	BM	BENCHMARK
	BND	BOUND
	CB	CATCH BASIN
	COMB	COMBINATION POLE
	DITHR	DROP INLET THROATED DNC
	EL	ELECTRIC POWER POLE
	FPOLE	FLAGPOLE
	GASFIL	GAS FILLER
	GP	GUIDE POST
	GSO	GAS SHUT OFF
	GUY	GUY POLE
	GUYW	GUY WIRE
	GV	GATE VALUE
	H	TREE HARDWOOD
	HCTRL	CONTROL HORIZONTAL
	HVCTRL	CONTROL HORIZ. & VERTICAL
	HYD	HYDRANT
	IP	IRON PIN
	IPIPE	IRON PIPE
	LI	LIGHT - STREET OR YARD
	MB	MAILBOX
	MH	MANHOLE (MH)
	MM	MILE MARKER
	PM	PARKING METER
	PMK	PROJECT MARKER
	POST	POST STONE/WOOD
	RRSIG	RAILROAD SIGNAL
	RRSL	RAILROAD SWITCH LEVER
	S	TREE SOFTWOOD
	SAT	SATELLITE DISH
	SHRUB	SHRUB
	SIGN	SIGN
	STUMP	STUMP
	TEL	TELEPHONE POLE
	TIE	TIE
	TSIGN	SIGN W/DOUBLE POST
	VCTRL	CONTROL VERTICAL
	WELL	WELL
	WSO	WATER SHUT OFF

THESE ARE COMMON VAOT SURVEY POINT SYMBOLS FOR EXISTING FEATURES, ALSO USED FOR PROPOSED FEATURES WITH HEAVIER LINEWEIGHT, IN COMBINATION WITH PROPOSED ANNOTATION.

PROPOSED GEOMETRY CODES

CODE	DESCRIPTION
PC	POINT OF CURVATURE
PI	POINT OF INTERSECTION
CC	CENTER OF CURVE
PT	POINT OF TANGENCY
PCC	POINT OF COMPOUND CURVE
PRC	POINT OF REVERSE CURVE
POB	POINT OF BEGINNING
POE	POINT OF ENDING
STA	STATION PREFIX
AH	AHEAD STATION SUFFIX
BK	BACK STATION SUFFIX
D	CURVE DEGREE OF (100FT)
R	CURVE RADIUS OF
T	CURVE TANGENT LENGTH
L	CURVE LENGTH OF
E	CURVE EXTERNAL DISTANCE

UTILITY SYMBOLOGY

UNDERGROUND UTILITIES

- UGU — UTILITY (GENERIC-UNKNOWN)
- UT — TELEPHONE
- UE — ELECTRIC
- UC — CABLE (TV)
- UEC — ELECTRIC+CABLE
- UET — ELECTRIC+TELEPHONE
- UCT — CABLE+TELEPHONE
- UECT — ELECTRIC+CABLE+TELEP.
- G — GAS LINE
- W — WATER LINE
- S — SANITARY SEWER (SEPTIC)

ABOVE GROUND UTILITIES (AERIAL)

- AGU — UTILITY (GENERIC-UNKNOWN)
- T — TELEPHONE
- E — ELECTRIC
- C — CABLE (TV)
- EC — ELECTRIC+CABLE
- ET — ELECTRIC+TELEPHONE
- AER E&T — ELECTRIC+TELEPHONE
- CT — CABLE+TELEPHONE
- ECT — ELECTRIC+CABLE+TELEP.
- UTILITY POLE GUY WIRE

PROJECT CONSTRUCTION SYMBOLOGY

PROJECT DESIGN & LAYOUT SYMBOLOGY

- CLEAR ZONE
- PLAN LAYOUT MATCHLINE

PROJECT CONSTRUCTION FEATURES

- TOP OF CUT SLOPE
- TOE OF FILL SLOPE
- STONE FILL
- BOTTOM OF DITCH ℄
- CULVERT PROPOSED
- STRUCTURE SUBSURFACE
- PROJECT DEMARCATION FENCE
- BARRIER FENCE
- TREE PROTECTION ZONE (TPZ)
- STRIPING LINE REMOVAL
- SHEET PILES

CONVENTIONAL BOUNDARY SYMBOLOGY

BOUNDARY LINES

- TOWN BOUNDARY LINE
- COUNTY BOUNDARY LINE
- STATE BOUNDARY LINE
- PROPOSED STATE R.O.W. (LIMITED ACCESS)
- PROPOSED STATE R.O.W.
- STATE ROW (LIMITED ACCESS)
- STATE ROW
- TOWN ROW
- PERMANENT EASEMENT LINE (P)
- TEMPORARY EASEMENT LINE (T)
- SURVEY LINE
- PROPERTY LINE (P/L)
- SLOPE RIGHTS
- 6F PROPERTY BOUNDARY
- 4F PROPERTY BOUNDARY
- HAZARDOUS WASTE

EPSC LAYOUT PLAN SYMBOLOGY

EPSC MEASURES

- FILTER CURTAIN
- SILT FENCE
- SILT FENCE WOVEN WIRE
- CHECK DAM
- DISTURBED AREAS REQUIRING RE-VEGETATION
- EROSION MATTING

SEE EPSC DETAIL SHEETS FOR ADDITIONAL SYMBOLOGY

ENVIRONMENTAL RESOURCES

- WETLAND BOUNDARY
- RIPARIAN BUFFER ZONE
- WETLAND BUFFER ZONE
- SOIL TYPE BOUNDARY
- T&E — THREATENED & ENDANGERED SPECIES
- HAZ — HAZARDOUS WASTE AREA
- AG — AGRICULTURAL LAND
- HABITAT — FISH & WILDLIFE HABITAT
- FLOOD PLAIN — FLOOD PLAIN
- OHW — ORDINARY HIGH WATER (OHW)
- STORM WATER
- USDA FOREST SERVICE LANDS
- WILDLIFE HABITAT SUIT/CONN

ARCHEOLOGICAL & HISTORIC

- ARCH — ARCHEOLOGICAL BOUNDARY
- HISTORIC DIST — HISTORIC DISTRICT BOUNDARY
- HISTORIC — HISTORIC AREA
- Ⓗ HISTORIC STRUCTURE

CONVENTIONAL TOPOGRAPHIC SYMBOLOGY

EXISTING FEATURES

- ROAD EDGE PAVEMENT
- ROAD EDGE GRAVEL
- DRIVEWAY EDGE
- DITCH
- FOUNDATION
- FENCE (EXISTING)
- FENCE WOOD POST
- FENCE STEEL POST
- GARDEN
- ROAD GUARDRAIL
- RAILROAD TRACKS
- CULVERT (EXISTING)
- STONE WALL
- WALL
- WOOD LINE
- BRUSH LINE
- HEDGE
- BODY OF WATER EDGE
- LEDGE EXPOSED

CONSULTING ENGINEERS

PROJECT NAME:	ST. JOHNSBURY
PROJECT NUMBER:	BF 7000(20)
FILE NAME: 86e048/cos/z86e048frm.dgn	PLOT DATE: 10/26/2016
PROJECT LEADER: J.BYATT	DRAWN BY: W.GORDON
DESIGNED BY: M.HALEY	CHECKED BY: P.SHEDD
CONVENTIONAL SYMBOLOGY LEGEND SHEET	SHEET 14 OF 70

CLD 14-0116 MODEL: LEGEND

GPS CONTROL POINTS

HVCTRL #1

CCY 105
NORTH = 706017.958
EAST = 1762633.984
ELEV. = 787.400

GENERAL LOCATION, ST JOHNSBURY, VT.
TO REACH FROM THE I-91 SOUTHBOUND BRIDGE OVER THE I-91 ACCESS ROAD AT EXIT 22 GO SOUTH ALONG I-91 SOUTHBOUND FOR 1.3 MI (2.1 KM) TO MILE MARKER 131.20 AND THE SITE OF THE MARK ON THE RIGHT. IT IS 0.5 MI (0.8 KM) NORTH OF EXIT 21. THE MARK IS SET FLUSH WITH GROUND SURFACE IN THE TOP OF A 15 CM SQUARE CONCRETE MONUMENT. IT IS 49.2 M (161.4 FT) (SLOPE) NORTH NORTHWEST OF AND ABOUT 15 M (49.2 FT) HIGHER THAN THE NORTH NORTHWEST EDGE OF PAVEMENT OF THE SOUTHBOUND LANE, 11.9 M (39.0 FT) SOUTH SOUTHEAST OF THE RIGHT-OF-WAY FENCE, 76.4 M (250.7 FT) EAST NORTHEAST OF A CONCRETE RIGHT-OF-WAY BOUND WHERE THE RIGHT-OF-WAY FENCE CHANGES FROM CHAIN LINK TO WOVEN WIRE, AND 0.3 M (1.0 FT) SOUTH SOUTHEAST OF A FIBERGLASS WITNESS POST. NOTE, MARK IS AT SOUTHBOUND STATION 825+37, 180 FT (54.9 M) LEFT.

HVCTRL #2

N 56
NORTH = 705217.451
EAST = 1762388.552
ELEV. = 714.480

RECOVERY NOTE BY VERMONT GEODETIC SURVEY 1996 (CHR)
GENERAL LOCATION, ST JOHNSBURY, VT. TO REACH FROM THE U.S.ROUTE 2 WESTBOUND BRIDGE OVER I-91 NORTHBOUND GO NORTHEAST ALONG I-91 NORTHBOUND FOR 0.4 MI (0.6 KM) TO THE MARK ON THE RIGHT. THE MARK IS SET IN THE TOP OF A LONG ROCK OUTCROP. IT IS 8.4 M (27.6 FT) SOUTHEAST OF AND ABOUT 1.5 M (4.9 FT) HIGHER THAN THE SOUTHEAST EDGE OF PAVEMENT OF I-91 NORTHBOUND LANE, 62.2 M (204.1 FT) EAST OF AND ACROSS THE HIGHWAY FROM THE SOUTHEAST LEG OF A ROAD SIGN STATING EXIT 21 ST JOHNSBURY MONTPELIER, 16.8 M (55.1 FT) NORTHEAST OF THE CENTER OF A DROP INLET, 22.9 M (75.1 FT) NORTHEAST OF A SIGN STATING NORTH 91, AND 1.4 M (4.6 FT) SOUTHEAST OF A FIBERGLASS WITNESS POST.

TRAVERSE TIES

HVCTRL #4

NORTH = 700856.716
EAST = 1762208.026
ELEV. = 687.523

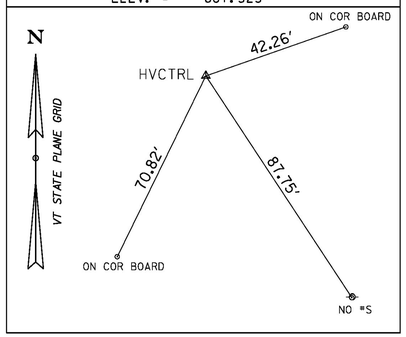

HVCTRL #10

NORTH = 700855.704
EAST = 1761565.942
ELEV. = 699.596

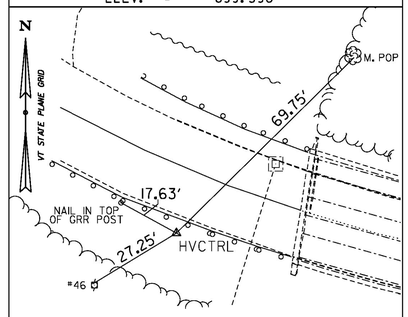

NORTH = _____
EAST = _____
ELEV. = _____

NORTH = _____
EAST = _____
ELEV. = _____

NORTH = _____
EAST = _____
ELEV. = _____

ALIGNMENT TIES

NORTH = _____
EAST = _____
ELEV. = _____

NORTH = _____
EAST = _____
ELEV. = _____

NORTH = _____
EAST = _____
ELEV. = _____

NORTH = _____
EAST = _____
ELEV. = _____

NORTH = _____
EAST = _____
ELEV. = _____

DATUM
VERTICAL NAVD 88
HORIZONTAL NAD 83(1996)
ADJUSTMENT COMPASS

PROJECT NAME: ST. JOHNSBURY
PROJECT NUMBER: BF 7000(20)

FILE NAME: X86E048TI.DGN
PROJECT LEADER: W. PELLETIER
DESIGNED BY: S. DONOVAN
TIE SHEET 1

PLOT DATE: 10/26/2016
DRAWN BY: S. DONOVAN
CHECKED BY: P. BEYOR
SHEET 15 OF 70

CLD 14-0116 MODEL: TIE 01

ALIGNMENT TIES

PC 59+83.92
NORTH = 701001.8337
EAST = 1761411.3702

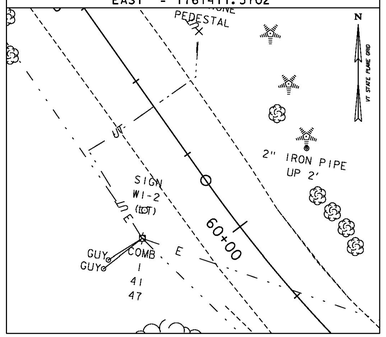

PI 62+29.17
NORTH = 700801.4662
EAST = 1761552.7804

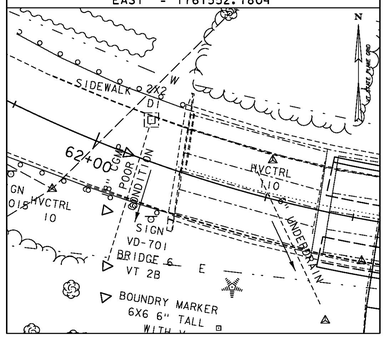

PT 64+19.49
NORTH = 700847.7864
EAST = 1761793.6091

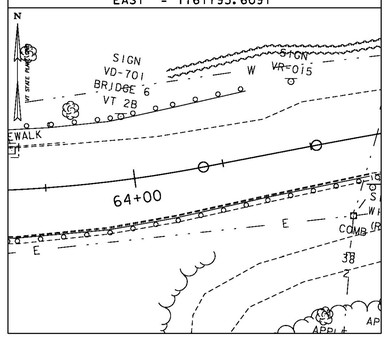

PC 64+51.66
NORTH = 700853.8620
EAST = 1761825.1974

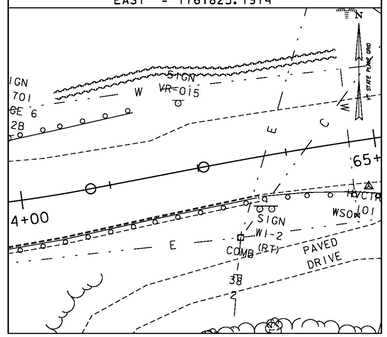

PI 65+58.01
NORTH = 700873.9478
EAST = 1761929.6280

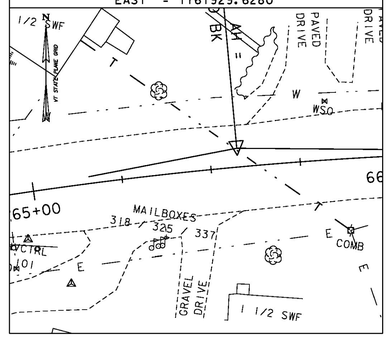

ALIGNMENT TIES

PT 66+63.65
NORTH = 700873.0856
EAST = 1762035.9691

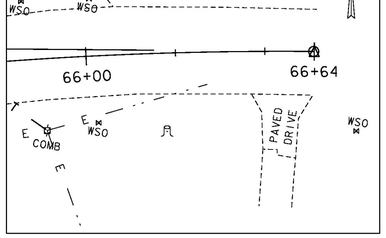

ALIGNMENT TIES

PC 71+55.53
NORTH = 700141.9797
EAST = 1761960.9677

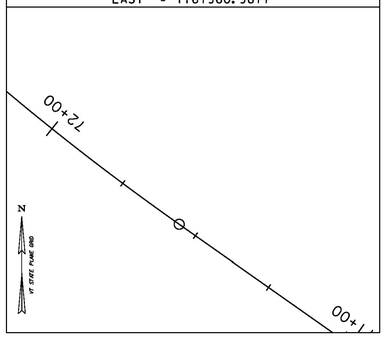

PI 76+69.64
NORTH = 700438.0153
EAST = 1761540.6446

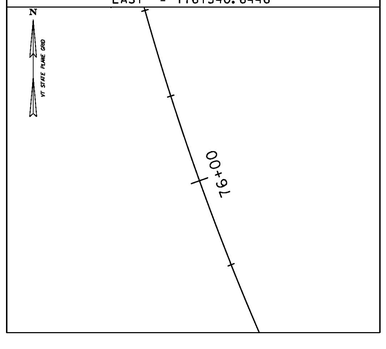

PT 80+49.91
NORTH = 700932.6044
EAST = 1761680.9666

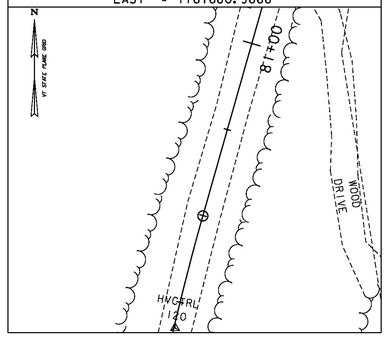

PROJECT NAME: ST. JOHNSBURY
PROJECT NUMBER: BF 7000(20)

FILE NAME: 86e048/cos/z86e048tie.dgn
PROJECT LEADER: J. BYATT
DESIGNED BY: M. HALEY
TIE SHEET 2

PLOT DATE: 10/26/2016
DRAWN BY: W.GORDON
CHECKED BY: P. SHEDD
SHEET 16 OF 70

CLD 14-0116 MODEL: TIE 02

REMOVAL AND DISPOSAL OF GUARDRAIL
61+18 TO 62+25 RT
61+67 TO 62+20 LT
63+51 TO 65+04 RT
63+56 TO 64+35 LT

GUARDRAIL APPROACH SECTION, GALVANIZED 2 RAIL BOX BEAM (COATED BLACK)
62+18.7 TO 62+66.4 LT
62+23.5 TO 62+67.9 RT
63+06.5 TO 63+50.8 RT
63+08 TO 63+55.7 LT

BOX BEAM GUARDRAIL (COATED BLACK)
61+28 TO 62+23.5 RT
61+71.9 TO 62+18.7 LT
63+50.8 TO 64+92.8 RT
63+55.7 TO 64+48 LT

MANUFACTURED TERMINAL SECTION, TANGENT (COATED BLACK)
64+48 TO 64+62 LT
64+92.8 TO 65+07 RT

DELINEATOR WITH STEEL POST
61+28 RT
61+71.9 LT
64+62 LT
65+07 RT

RELOCATE MAILBOX, MULTIPLE SUPPORT
65+33 RT

CAST-IN-PLACE CONCRETE CURB, TYPE B
63+08 TO 63+58 LT

EXTENSION SERVICE BOX AND CURB STOP
64+92 RT

SEAMLESS COPPER WATER TUBE (3/4")
64+92 RT

NOTE
AN EXISTING 1 INCH WATER LINE IS LOCATED ALONG THE NORTH SIDE OF VT ROUTE 2B. CONTRACTOR SHALL INSTALL 4 INCHES OF INSULATION BOARD FOR A 2 FEET WIDTH CENTERED OVER THE WATER LINE FROM APPROXIMATE STA 62+25 TO 63+50 LT. INSTALLATION WILL BE PAID FOR UNDER ITEM 622.10, INSULATION BOARD.

VT 2B CURVE (1)
BRG BK = S35°12'45.77"E
DELTA = 65°40'28" LT
D = 15°04'40"
R = 380.00'
T = 245.24'
L = 435.57'
E = 72.27'
BANK = 0.040

EXISTING DRAINAGE
1 STA 62+12.5 LT TO 62+14.5 RT
EXISTING 18" CGMP W/ DI
REMOVE DI/ REMOVE 40' PIPE

2 STA 62+43.9 LT TO 62+70.9 RT
EXISTING 6" UNDERDRAIN
REMOVE 45' PIPE

3 STA 63+51.3 LT TO 63+66.0 LT
EXISTING 18" CGMP W/ DI
REMOVE DI/ REMOVE 20' PIPE
CAP AND ABANDON REMAINING PIPE

PROPOSED DRAINAGE
1 STA 63+51.0 LT
NEW 18" X 15' CPEP(SL)
NEW 4' DIA. PRCCB
W/CI GRATE TYPE D AT 63+51.0

2 STA 62+18.0 RT TO 62+21.0 LT
NEW 6" X 40' CARRIER PIPE
STA 62+21.0 LT TO 62+72.0 LT
NEW 6" X 51' UNDERDRAIN
INV IN (UNDERDRAIN) = 691.15
INV OUT (CARRIER PIPE) = 690.24

3 STA 63+03.0 TO 63+51.0 LT
NEW 6" X 51' UNDERDRAIN
INV IN = 690.26
INV OUT = 688.88
CONNECT TO NEW CB AT 63+51.0 LT

4 STA 63+38.0 LT TO 63+85.0 RT
NEW 6" X 61' CARRIER PIPE
STA 63+85.0 RT TO 65+04.0 RT
NEW 6" X 119' UNDERDRAIN
INV IN (UNDERDRAIN) = 686.34
INV OUT (CARRIER PIPE) = 684.54

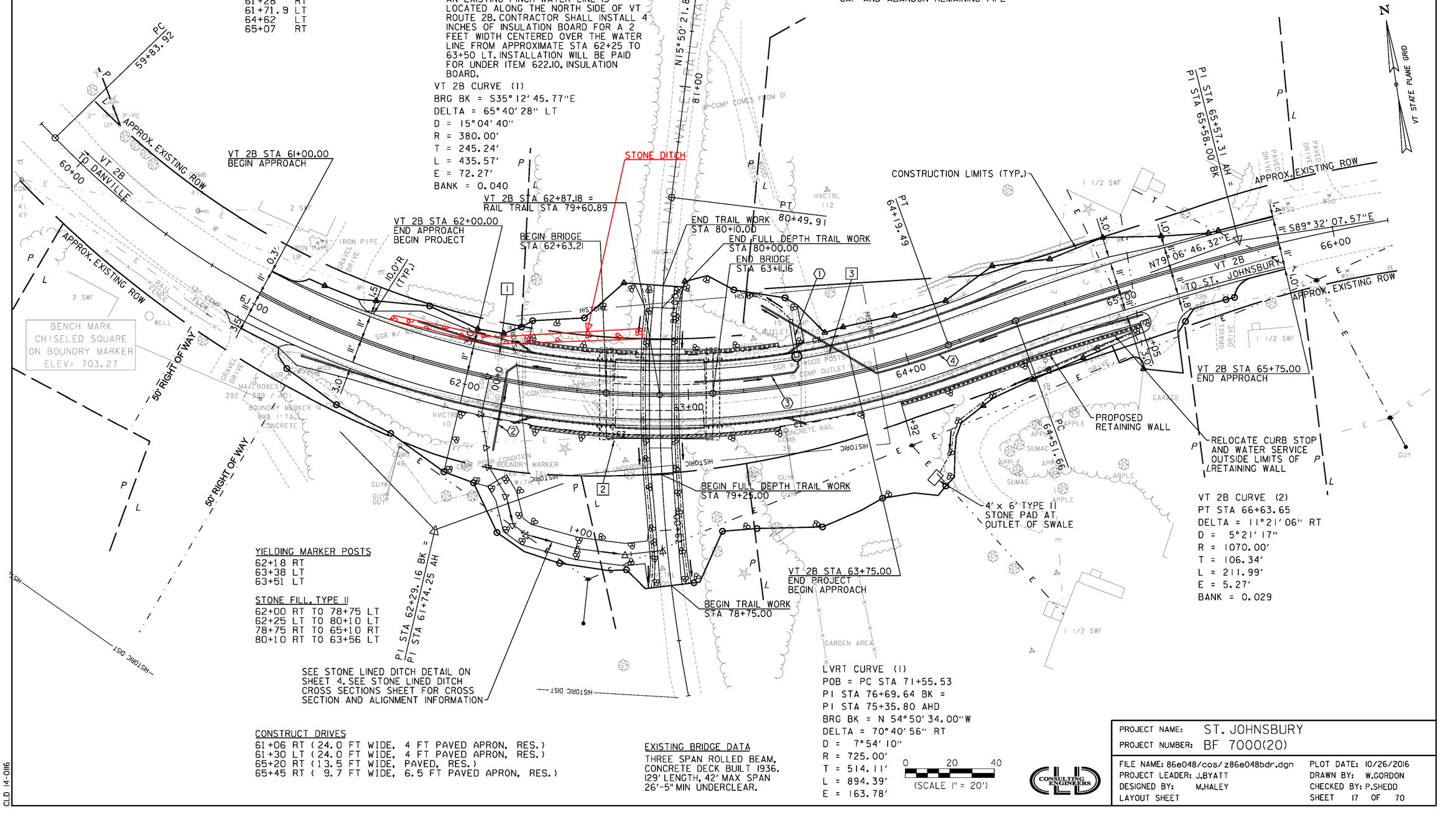

YIELDING MARKER POSTS
62+18 RT
63+38 LT
63+51 LT

STONE FILL, TYPE II
62+00 RT TO 78+75 LT
62+25 LT TO 80+10 LT
78+75 RT TO 65+10 RT
80+10 RT TO 63+56 LT

SEE STONE LINED DITCH DETAIL ON SHEET 4. SEE STONE LINED DITCH CROSS SECTIONS SHEET FOR CROSS SECTION AND ALIGNMENT INFORMATION

CONSTRUCT DRIVES
61+06 RT (24.0 FT WIDE, 4 FT PAVED APRON, RES.)
61+30 LT (24.0 FT WIDE, 4 FT PAVED APRON, RES.)
65+20 RT (13.5 FT WIDE, PAVED, RES.)
65+45 RT (9.7 FT WIDE, 6.5 FT PAVED APRON, RES.)

EXISTING BRIDGE DATA
THREE SPAN ROLLED BEAM, CONCRETE DECK BUILT 1936. 129' LENGTH, 42' MAX SPAN 26'-5" MIN UNDERCLEAR.

LVRT CURVE (1)
POB = PC STA 71+55.53
PI STA 76+69.64 BK =
PI STA 75+35.80 AHD
BRG BK = N 54°50'34.00"W
DELTA = 70°40'56" RT
D = 7°54'10"
R = 725.00'
T = 514.11'
L = 894.39'
E = 163.78'

0 20 40
(SCALE 1" = 20')

CLD CONSULTING ENGINEERS

PROJECT NAME:	ST. JOHNSBURY
PROJECT NUMBER:	BF 7000(20)
FILE NAME: 86e048/cos/z86e048bdr.dgn	PLOT DATE: 10/26/2016
PROJECT LEADER: J.BYATT	DRAWN BY: W.GORDON
DESIGNED BY: M.HALEY	CHECKED BY: P.SHEDD
LAYOUT SHEET	SHEET 17 OF 70

CLD 14-0116

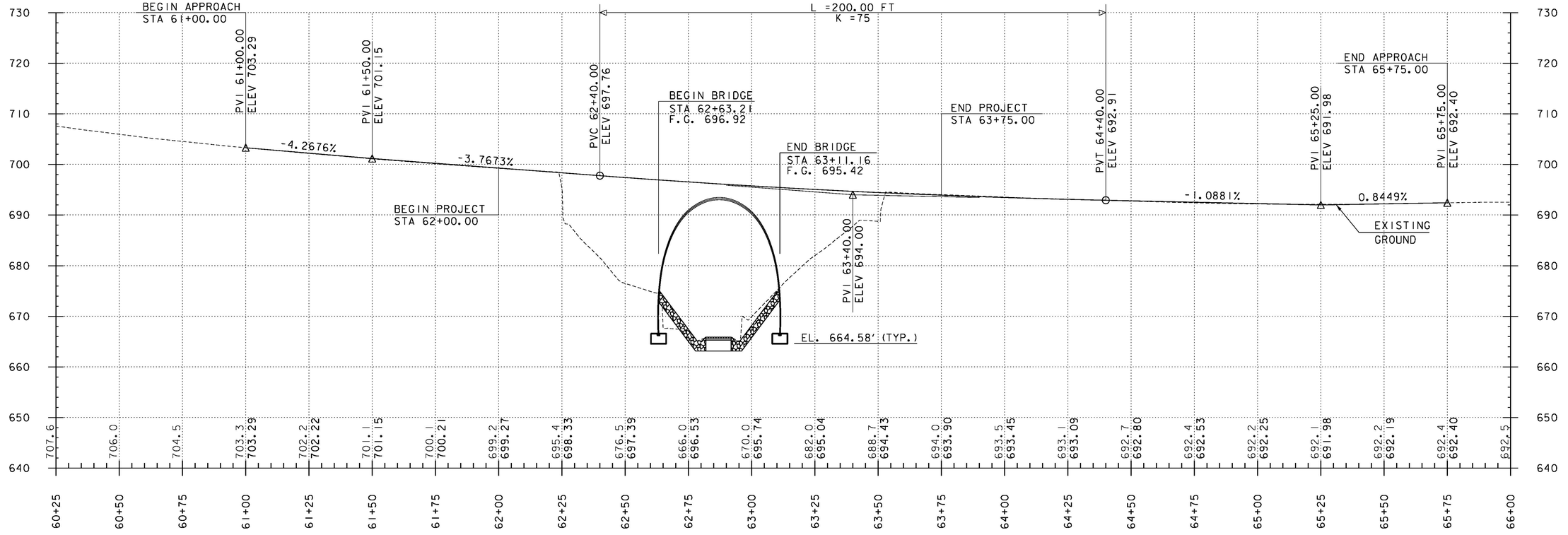

STATIONS AND ELEVATIONS ARE IN FEET.

THE ELEVATIONS SHOWN TO THE NEAREST TENTH ARE THE OLD GROUND ALONG THE CENTERLINE.

THE ELEVATIONS SHOWN TO THE NEAREST HUNDREDTH ARE THE PROPOSED FINISHED GRADE ALONG THE CENTERLINE.

VT 2B PROFILE

HOR. SCALE 1" = 20'-0"
VER. SCALE 1" = 10'-0"

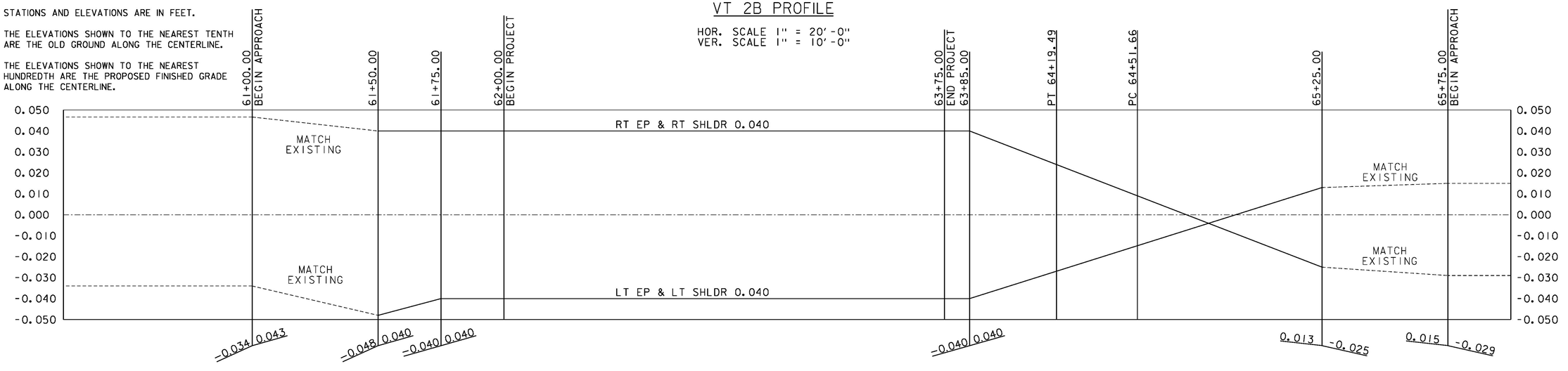

BANKING DIAGRAM

NOT TO SCALE

PROJECT NAME:	ST. JOHNSBURY
PROJECT NUMBER:	BF 7000(20)
FILE NAME: 86e048/cos/z86e048pro.dgn	PLOT DATE: 10/26/2016
PROJECT LEADER: J.BYATT	DRAWN BY: W.GORDON
DESIGNED BY: M.HALEY	CHECKED BY: P.SHEDD
VT 2B PROFILE AND BANKING DIAGRAM	SHEET 18 OF 70

CLD 14-0116 MODEL: MAINLINE PROFILE

NOTES

1. SEE DETOUR SIGNS AND NOTES SHEET AND DETOUR SIGN SUMMARY SHEET FOR ADDITIONAL SIGN AND DETOUR INFORMATION.
2. SEE TRAFFIC CONTROL SHEET FOR SIGN INFORMATION AT THE BRIDGE SITE.

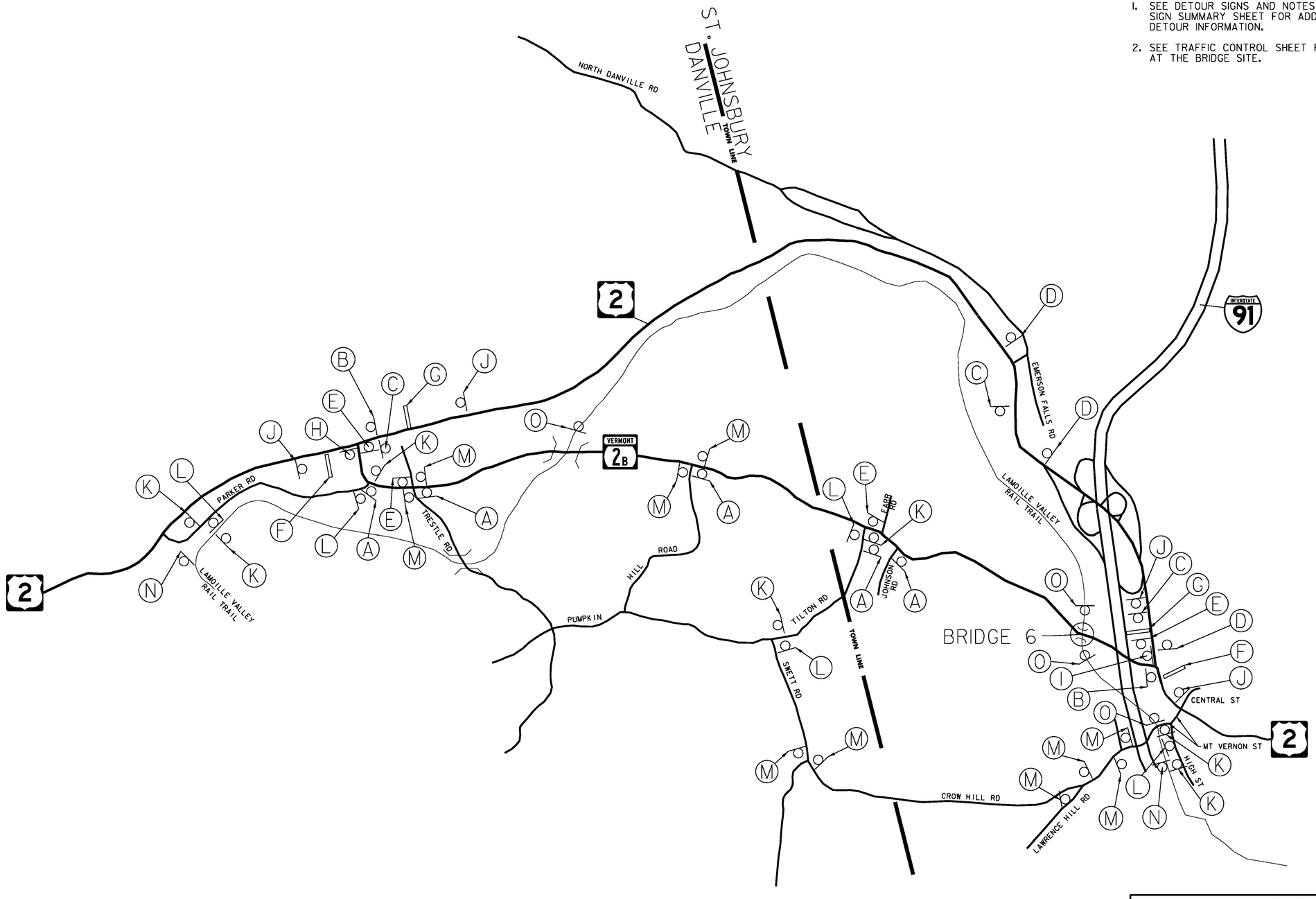

DETOUR MAP

NOT TO SCALE

PROJECT NAME:	ST. JOHNSBURY
PROJECT NUMBER:	BF 7000(20)
FILE NAME: 86e048/cos/z86e048bdrtcp.dgn	PLOT DATE: 10/26/2016
PROJECT LEADER: J.BYATT	DRAWN BY: W.GORDON
DESIGNED BY: M.HALEY	CHECKED BY: P.SHEDD
DETOUR MAP	SHEET 19 OF 70

CLD 14-0116 MODEL: DETOUR MAP

(A) (5) 	(B) (2) 	(C) (3) 	(D) (3) 	(E) (4) 
(F) (2) 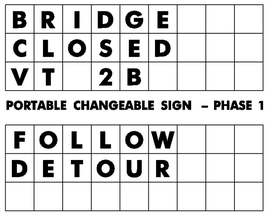 PORTABLE CHANGEABLE SIGN – PHASE 1 PORTABLE CHANGEABLE SIGN – PHASE 2	(G) (2) 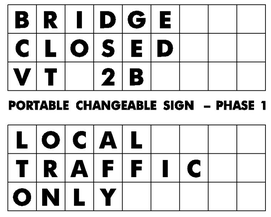 PORTABLE CHANGEABLE SIGN – PHASE 1 PORTABLE CHANGEABLE SIGN – PHASE 2	(H) (1)  SIGNS MOUNTED ON TYPE III BARRICADE	(I) (1)  SIGNS MOUNTED ON TYPE III BARRICADE	(J) (4) 
(K) (7) 	(L) (5) 	(M) (10) 	(N) (2) 	(O) (4) 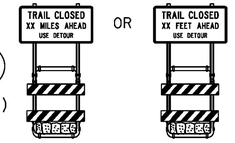 SIGN MOUNTED ON TYPE III BARRICADE

TRAFFIC CONTROL NOTES

1. TRAFFIC WILL BE MAINTAINED ON A DETOUR VIA US ROUTE 2.
2. THE CONTRACTOR SHALL SUBMIT A SITE SPECIFIC TRAFFIC CONTROL PLAN FOR ACCEPTANCE BY THE PROJECT MANAGER PRIOR TO THE START OF CONSTRUCTION. THE COST OF PREPARING THIS PLAN (AND MAKING CHANGES IF NECESSARY) WILL BE INCLUDED IN THE UNIT PRICE BID FOR ITEM 900.645, "SPECIAL PROVISION (TRAFFIC CONTROL, ALL-INCLUSIVE)". THE TRAFFIC CONTROL PLAN SHALL BE IN COMPLIANCE WITH VTRANS STANDARDS AND THE LATEST EDITION OF THE MUTCD. WHERE CONFLICTS EXIST, THE MUTCD SHALL GOVERN.
3. THE CONTRACTOR SHALL BE RESPONSIBLE FOR ALL DETOUR AND CONSTRUCTION SIGNING. THE EXACT LOCATIONS FOR SIGN INSTALLATIONS WILL BE COORDINATED WITH THE ENGINEER AND SHALL BE IN ACCORDANCE WITH THE LATEST EDITION OF THE MUTCD.
4. TRAFFIC CONTROL WARNING SIGNS SHALL BE PROVIDED PER STANDARDS T-1 AND T-10 AND THE LATEST EDITION OF THE MUTCD. ADDITIONAL PROJECT CONSTRUCTION SIGNS SHALL BE INSTALLED AS SHOWN ON THE PLANS AND AS DIRECTED BY THE ENGINEER. ALL ON AND OFF PROJECT SIGNS AND BARRICADES AS REQUIRED FOR THE DETOUR WILL BE THE RESPONSIBILITY OF THE CONTRACTOR AND SHALL BE PAID FOR UNDER THE ITEM 900.645, "SPECIAL PROVISION (TRAFFIC CONTROL, ALL-INCLUSIVE)". ALL SIGNS AND BARRICADES SHALL BE INSPECTED DAILY AND REPAIRED AS NECESSARY. ALL SIGNS AND BARRICADES SHALL BE CLEARED OF DUST AND DEBRIS WEEKLY.
5. PORTABLE CHANGEABLE MESSAGE SIGNS (PCMS) SHALL BE PLACED AT THE APPROXIMATE LOCATIONS SHOWN ON THE PLANS OR WHERE DIRECTED BY THE ENGINEER. TWO PCMS SHALL BE PLACED AT THE PROJECT LOCATION 14 DAYS PRIOR TO THE START OF CONSTRUCTION TO WARN OF THE IMPENDING DETOUR. THESE PCMS SHALL THEN BE REMOVED AND DEPLOYED TO THE LOCATIONS SHOWN ONCE CONSTRUCTION HAS BEGUN. PAYMENT FOR THESE SIGNS, INCLUDING ANY RELOCATING, WILL BE INCLUDED IN THE UNIT PRICE BID FOR ITEM 641.15 "PORTABLE CHANGEABLE MESSAGE SIGN".
6. THE MESSAGE TO BE DISPLAYED ON PCMS SHALL BE SUBMITTED TO THE ENGINEER IN ADVANCE FOR APPROVAL. MESSAGES SHOULD BE UPDATED PERIODICALLY TO DESCRIBE THE WORK ACTIVITY OCCURRING SO THAT THE PCMS CONTINUES TO COMMAND THE ATTENTION OF MOTORISTS.
7. THE ROUTE MARKERS USED FOR THE DETOUR AS SHOWN ON THE PLANS SHALL FOLLOW STANDARDS E-127 AND E-136B. THESE SIGNS SHALL BE REMOVED AT THE END OF THE CONSTRUCTION PERIOD. THESE SIGNS AND THEIR REMOVAL WILL BE PAID FOR UNDER ITEM 900.645, "SPECIAL PROVISION (TRAFFIC CONTROL, ALL-INCLUSIVE)".

TRAFFIC CONTROL NOTES (CONTINUED)

8. ACCESS TO ALL EXISTING DRIVES AND SIDE ROADS SHALL BE MAINTAINED AT ALL TIMES DURING ALL PHASES OF CONSTRUCTION.
9. INSTALLATION OF DETOUR SIGNS SHALL NOT BLOCK ANY EXISTING TRAFFIC CONTROL SIGN ASSEMBLIES AND SHALL MODIFY OR BE PLACED ADJACENT TO EXISTING SIGN ASSEMBLIES WHEN POSSIBLE. THE CONTRACTOR SHALL MAINTAIN AT LEAST 200 FEET BETWEEN SIGN ASSEMBLIES WHENEVER POSSIBLE.
10. EXISTING SIGNS THAT ARE IN CONFLICT WITH THE TRAFFIC FLOW OF THE DETOUR SHALL BE REMOVED OR COVERED BY THE CONTRACTOR. ALL SIGNS REMOVED OR COVERED SHALL BE REPLACED OR UNCOVERED WHEN THE TRAFFIC CONTROL PLAN IS DISASSEMBLED. PAYMENT FOR THIS WORK WILL BE INCIDENTAL TO ITEM 900.645, "SPECIAL PROVISION (TRAFFIC CONTROL, ALL-INCLUSIVE)".
11. CONTACT DIG-SAFE AT LEAST 48 HOURS PRIOR TO BREAKING GROUND TO INSTALL ANY SIGN POSTS.
12. TEMPORARY TRAFFIC BARRIER WILL BE PAID FOR UNDER ITEM 900.645, "SPECIAL PROVISION (TRAFFIC CONTROL, ALL-INCLUSIVE)" AND SHALL BE USED FOR THE CLOSURE OF THE BRIDGE. CONTRACTOR SHALL INSTALL BARRIER AS NECESSARY TO PREVENT THE TRAVELLING PUBLIC FROM ENTERING THE CONSTRUCTION SITE.
13. THE ESTIMATED NUMBER OF EACH SIGN PACKAGE REQUIRED IS REPRESENTED BY THE NUMBER UNDERNEATH EACH LETTER DESIGNATOR AND TOTALED ON SHEET 21 AND 22.
14. ~~ADDITIONAL BIKE PATH DETOUR SIGNAGE WILL BE REQUIRED AT THE BEGINNING AND END OF THE DETOUR. SIGNAGE INFORMATION AND INSTALLATION LOCATIONS WILL BE PROVIDED AT THE MANDATORY PRE-BID MEETING.~~
14. HOURS FOR ITEM 630.10, "UNIFORMED TRAFFIC OFFICERS" AND ITEM 630.15, "FLAGGERS" HAVE BEEN INCLUDED IN THE CONTRACT FOR THE INSTALLATION/REMOVAL OF DETOUR SIGNING AND FOR TEMPORARY ACCESS OF CONTRUCTION VEHICLES INTO AND OUT OF THE BRIDGE CLOSURE AREA.

REVISION	DATE	DESCRIPTION	BY
1	11-23-2016	MODIFY NOTE	SRB
2	11-23-2016	DELETE NOTE	SRB
3	11-23-2016	ADD NOTE	SRB

CONSULTING ENGINEERS

PROJECT NAME: ST. JOHNSBURY
PROJECT NUMBER: BF 7000(20)

FILE NAME: 86e048/cos/z86e048bdrtcp.dgn PLOT DATE: 11/22/2016
PROJECT LEADER: J.BYATT DRAWN BY: W.GORDON
DESIGNED BY: M.HALEY CHECKED BY: P.SHEDD
DETOUR SIGNS AND NOTES SHEET SHEET 20 OF 70

CLD 14-0116 MODEL: DETOUR NOTES

STATE OF VERMONT
AGENCY OF TRANSPORTATION

DETOUR SIGN SUMMARY SHEET

SHSM = FHWA 2004 STANDARD HIGHWAY SIGNS AND MARKINGS BOOK AND THE 2012 SUPPLEMENT TO THE 2004 EDITION

SIGN ASSEMLBY DESIGNATION (SEE SHEET 20)	SIGN LEGEND	SIGN DIMENSIONS EA	WIDTH (In)	HEIGHT (In)	NEW & SALVAGED SIGNS "A"	"B"	SALV SIGN	SALV TIS	EXIST POST RETAIN	EXIST POST SALVAGE	NEW SIGN POSTS NO. OF POSTS	SQUARE STEEL (In) 1.75 lb/ft 1.88	2.0 lb/ft 2.42	2.5 lb/ft 3.35	ANCHOR	SLEEVE	TUBULAR ALUMINUM Ø (In) 3.0 lb/ft 1.3	4.0 lb/ft 1.7	4.0 MOD lb/ft 1.7	TUBULAR STEEL Ø (In) FOUND-ATION	3.0 lb/ft 7.6	3.5 lb/ft 9.0	4.0 lb/ft 10.8	5.0 lb/ft 14.6	W-SHAPE STEEL FTG. SIZE 24"	30"	WEIGHT	POST SIZE	SIGN REQUIRED	REMARKS	SIGN DETAIL SHSM	DETAIL ON SHEET NUMBER	STD. SHEET NUMBER
Ⓐ	DETOUR EAST	5	24	12	10.00						5		X		X																LOCATIONS AS SHOWN ON DETOUR MAP BLACK ON FLUORESCENT ORANGE GREEN ON WHITE	M4-8 M3-2		
	VERMONT 2B ←	5	24	24	20.00																										GREEN ON WHITE BLACK ON FLUORESCENT ORANGE	M6-1		E-136B
		5	21	15	10.94																												
Ⓑ	DETOUR WEST	2	24	12	4.00						2		X		X																LOCATIONS AS SHOWN ON DETOUR MAP BLACK ON FLUORESCENT ORANGE GREEN ON WHITE	M4-8 M3-4		
	VERMONT 2B ←	2	24	24	8.00																										GREEN ON WHITE BLACK ON FLUORESCENT ORANGE	M6-1		E-136B
		2	21	15	4.38																												
Ⓒ	DETOUR EAST	3	24	12	6.00						3		X		X																LOCATIONS AS SHOWN ON DETOUR MAP BLACK ON FLUORESCENT ORANGE GREEN ON WHITE	M4-8 M3-2		
	VERMONT 2B ↑	3	24	24	12.00																										GREEN ON WHITE BLACK ON FLUORESCENT ORANGE	M6-3		E-136B
		3	21	15	6.56																												
Ⓓ	DETOUR WEST	3	24	12	6.00						3		X		X																LOCATIONS AS SHOWN ON DETOUR MAP BLACK ON FLUORESCENT ORANGE GREEN ON WHITE	M4-8 M3-4		
	VERMONT 2B ↑	3	24	24	12.00																										GREEN ON WHITE BLACK ON FLUORESCENT ORANGE	M6-3		E-136B
		3	21	15	6.56																												
Ⓔ	DETOUR EAST	4	24	12	8.00						4		X		X																LOCATIONS AS SHOWN ON DETOUR MAP BLACK ON FLUORESCENT ORANGE GREEN ON WHITE	M4-8 M3-2		
	VERMONT 2B →	4	24	24	16.00																										GREEN ON WHITE BLACK ON FLUROESCENT ORANGE	M6-1		E-136B
		4	21	15	8.75																												
Ⓗ	ROAD CLOSED 3 MILES AHEAD LOCAL TRAFFIC ONLY ← DETOUR	1	60	30	12.50																										LOCATION AS SHOWN ON DETOUR MAP SIGNS MOUNTED ON TYPE III BARRICADE	R11-3a M4-10L		
		1	48	18	6.00																												
Ⓘ	ROAD CLOSED 0.3 MILES AHEAD LOCAL TRAFFIC ONLY DETOUR →	1	60	30	12.50																										LOCATION AS SHOWN ON DETOUR MAP SIGNS MOUNTED ON TYPE III BARRICADE	R11-3a M4-10R		
		1	48	18	6.00																												
Ⓙ	DETOUR AHEAD	4	48	48	64.00						8		X		X																LOCATIONS AS SHOWN ON DETOUR MAP	W20-2		

NOTES

1. FINAL POST LENGTHS ARE TO BE DETERMINED IN THE FIELD. POST SIZES ARE COMPUTED BASED ON INFORMATION FURNISHED ON THE STANDARD SHEETS AND VAOT "SIGN POST DESIGN GUIDELINE."
2. ALL SIGNS SHOWN ARE FOR INFORMATIONAL PURPOSES. ALL SIGNS, POSTS, AND ANCHORS WILL BE PAID UNDER ITEM 900.645, "SPECIAL PROVISION (TRAFFIC CONTROL, ALL-INCLUSIVE)". SEE TRAFFIC CONTROL NOTES FOR ADDITIONAL INFORMATION.

PROJECT NAME: ST. JOHNSBURY
PROJECT NUMBER: BF 7000(20)

FILE NAME: 86e048/cos/z86e048bdrtcp.dgn PLOT DATE: 10/26/2016
PROJECT LEADER: J.BYATT DRAWN BY: P. McKECHNIE
DESIGNED BY: M.HALEY CHECKED BY: P.SHEDD
DETOUR SIGN SUMMARY SHEET 1 SHEET 21 OF 70

MODEL: DETOUR SIGN SUMMARY SHEET 01
CLD 14-0116

STATE OF VERMONT
AGENCY OF TRANSPORTATION

DETOUR SIGN SUMMARY SHEET

SHSM = FHWA 2004 STANDARD HIGHWAY SIGNS AND MARKINGS BOOK AND THE 2012 SUPPLEMENT TO THE 2004 EDITION

SIGN ASSEMLBY DESIGNATION (SEE SHEET 20)	SIGN LEGEND	SIGN DIMENSIONS EA	WIDTH (In)	HEIGHT (In)	NEW & SALVAGED SIGNS "A"	"B"	SALV SIGN	SALV TIS	EXIST POST RETAIN	EXIST POST SALVAGE	NEW SIGN POSTS NO. OF POSTS	SQUARE STEEL (In) 1.75 lb/ft 1.88	2.0 lb/ft 2.42	2.5 lb/ft 3.35	ANCHOR	SLEEVE	TUBULAR ALUMINUM Ø (In) 3.0 lb/ft 1.3	4.0 lb/ft 1.7	4.0 MOD lb/ft 1.7	TUBULAR STEEL Ø (In) FOUNDATION	3.0 lb/ft 7.6	3.5 lb/ft 9.0	4.0 lb/ft 10.8	5.0 lb/ft 14.6	W-SHAPE STEEL FTG. SIZE 24"	30"	WEIGHT	POST SIZE	SIGN REQUIRED	REMARKS	SIGN DETAIL SHSM	DETAIL ON SHEET NUMBER	STD. SHEET NUMBER
Ⓚ	DETOUR ←	7	30	24	35.00						3		X		X																LOCATION AS SHOWN ON DETOUR MAP BLACK ON FLUORESCENT ORANGE	M4-9a(L)		
Ⓛ	DETOUR →	5	30	24	25.00						3		X		X																LOCATION AS SHOWN ON DETOUR MAP BLACK ON FLUORESCENT ORANGE	M4-9a(R)		
Ⓜ	DETOUR ↑	10 10	30 21	24 15	50.00 21.90						10		X		X																LOCATION AS SHOWN ON DETOUR MAP BLACK ON FLUORESCENT ORANGE	M4-9a M6-3		
Ⓝ	END DETOUR	2 2	24 30	12 24	4.00 10.00						2		X		X																LOCATION AS SHOWN ON DETOUR MAP BLACK ON FLUORESCENT ORANGE	M4-8b M4-9a		
Ⓞ	TRAIL CLOSED XX MILES AHEAD USE DETOUR	1	60	30	12.50																										3.3 MILES LOCATION AS SHOWN ON DETOUR MAP SIGN MOUNTED ON TYPE III BARRICADE	RII-3a		
Ⓞ	TRAIL CLOSED XX MILES AHEAD USE DETOUR	1	60	30	12.50																										0.5 MILES LOCATION AS SHOWN ON DETOUR MAP SIGN MOUNTED ON TYPE III BARRICADE	RII-3a		
Ⓞ	TRAIL CLOSED XX FEET AHEAD USE DETOUR	2	60	30	25.00																										100 FEET LOCATIONS AS SHOWN ON DETOUR MAP SIGNS MOUNTED ON TYPE III BARRICADE	RII-3a		

NOTES

1. FINAL POST LENGTHS ARE TO BE DETERMINED IN THE FIELD. POST SIZES ARE COMPUTED BASED ON INFORMATION FURNISHED ON THE STANDARD SHEETS AND VAOT "SIGN POST DESIGN GUIDELINE."
2. ALL SIGNS SHOWN ARE FOR INFORMATIONAL PURPOSES. ALL SIGNS, POSTS, AND ANCHORS WILL BE PAID UNDER ITEM 900.645, "SPECIAL PROVISION (TRAFFIC CONTROL, ALL-INCLUSIVE)". SEE TRAFFIC CONTROL NOTES FOR ADDITIONAL INFORMATION.

PROJECT NAME: ST. JOHNSBURY
PROJECT NUMBER: BF 7000(20)

FILE NAME: 86e048/cos/z86e048bdrtcp.dgn PLOT DATE: 10/26/2016
PROJECT LEADER: J.BYATT DRAWN BY: P. McKECHNIE
DESIGNED BY: M.HALEY CHECKED BY: P.SHEDD
DETOUR SIGN SUMMARY SHEET 2 SHEET 22 OF 70

MODEL: DETOUR SIGN SUMMARY SHEET 02
CLD 14-0116

NOTES

1. THE CONTRACTOR SHALL BE RESPONSIBLE FOR PROVIDING SIGNAGE AS SHOWN ON THIS SHEET AND IN ACCORDANCE WITH THE LATEST EDITION OF THE MUTCD AND VTRANS STANDARDS. PAYMENT FOR SIGNAGE WILL BE MADE UNDER ITEM 900.645, "SPECIAL PROVISION (TRAFFIC CONTROL, ALL-INCLUSIVE)".

2. TEMPORARY TRAFFIC BARRIER WILL BE PAID FOR UNDER ITEM 900.645, "SPECIAL PROVISION (TRAFFIC CONTROL, ALL-INCLUSIVE)" AND FURNISHED IN ACCORDANCE WITH SECTION 621.

N

VT STATE PLANE GRID

LAMOILLE VALLEY RAIL TRAIL

WOODY DRIVE

VT 2B
TO DANVILLE

APPROX. EXISTING ROW

VT 2B STA 61+00.00
BEGIN APPROACH

VT 2B STA 62+87.18 =
RAIL TRAIL STA 79+60.89

VT 2B STA 62+00.00
END APPROACH
BEGIN PROJECT

TEMPORARY TRAFFIC BARRIER

TYPE III BARRICADE WITH
TYPE III BARRICADE (MOD)

TEMPORARY TRAFFIC BARRIER

TEMPORARY TRAFFIC BARRIER

VT 2B STA 63+75.00
END PROJECT
BEGIN APPROACH

TYPE III BARRICADE WITH
TYPE III BARRICADE (MOD)

TEMPORARY TRAFFIC BARRIER

APPROX. EXISTING ROW

VT 2B
TO ST. JOHNSBURY

APPROX. EXISTING ROW

VT 2B STA 65+75.00
END APPROACH

60+00
61+00
62+00
63+00
64+00
65+00
66+00
80+00
81+00
79+00

500'
500'

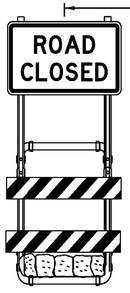

RII-2 B/W SIGN
MOUNTED ON
TYPE III BARRICADE
(MODIFIED)



N/C

W20-3 B/O



N/C

W20-3 B/O

0 20 40
(SCALE 1" = 20')

LEGEND

N/C	NEW SIGN/CONSTRUCTION ONLY
B/O	BLACK/ORANGE
B/W	BLACK/WHITE
⊠	TYPE III BARRICADE
⊠	TYPE III BARRICADE (MOD.)
═	TEMPORARY TRAFFIC BARRIER

CONSULTING ENGINEERS

PROJECT NAME: ST. JOHNSBURY
PROJECT NUMBER: BF 7000(20)

FILE NAME: 86e048/cos/z86e048bdrtcp.dgn PLOT DATE: 10/26/2016
PROJECT LEADER: J.BYATT DRAWN BY: W.GORDON
DESIGNED BY: M.HALEY CHECKED BY: P.SHEDD
TRAFFIC CONTROL SHEET SHEET 23 OF 70

CLD 14-016 MODEL: TCP

MARK	STATION	OFFSET	REMARKS	POLE NUMBER
UP#1	59+87	23.9' RT	RETAIN EXISTING POLE AND ANCHORS. RETAIN CONNECTIONS TO POLE #2 AND POLE #3.	1/41/47
UP#2	60+56	16.8' LT	RETAIN EXISTING POLE. RETAIN EXISTING ELECTRIC AND TELEPHONE SERVICES.	1/41A
UP#3	61+80	39.8' RT	RETAIN EXISTING POLE, REMOVE EXISTING ANCHORS. RETAIN EXISTING CONNECTION TO POLE #1, REMOVE CONNECTION TO EXISTING POLE #4. CONNECT NEW LINES TO NEW POLE #3A.	46
UP#3A	62+61	84.0' RT	INSTALL NEW POLE WITH 20 FT GUY AND ANCHOR. CONNECT NEW LINES TO EXISTING POLE #3 AND NEW POLE #4A.	NEW
UP#4	63+41	19.9' RT	REMOVE EXISTING POLE AND ANCHORS. REMOVE CONNECTIONS TO POLE #3 AND POLE #5.	39
UP#4A	63+91.5	38.0' RT	INSTALL NEW POLE . CONNECT NEW LINES TO NEW POLE #3A AND REPLACED POLE #6. INSTALL NEW ELECTRIC AND TELEPHONE SERVICES. INSTALL NEW MID-SPAN ELECTRIC AND CABLE TV SERVICES NEAR STA. 65+00.	NEW
UP#5	64+58	21.3' RT	REMOVE EXISTING POLE, REMOVE EXISTING CONNECTIONS TO POLE #4 AND POLE #6, REMOVE EXISTING SERVICE CONNECTIONS.	1/38/2
UP#6	65+88	20.1' RT	REMOVE EXISTING POLE. INSTALL NEW POLE IN SAME LOCATION AS EXISTING. RETAIN EXISTING TELEPHONE SERVICE AND CONNECTION TO EXISTING POLE NEAR STA. 67+15 LT. CONNECT NEW LINES TO NEW POLE #4A AND NEW POLE #7.	-
UP#7	66+09	87.3' RT	REMOVE EXISTING POLE AND ANCHOR. INSTALL NEW POLE AND ANCHOR IN SAME LOCATION AS EXISTING. CONNECT NEW LINE TO NEW POLE #6. RETAIN EXISTING ELECTRIC SERVICE LINES.	-

N

VT STATE PLANE GRID

VT 2B STA 61+00.00
BEGIN APPROACH

VT 2B STA 62+00.00
END APPROACH
BEGIN PROJECT

VT 2B STA 62+87.18 =
RAIL TRAIL STA 79+60.89

EXISTING WATER MAIN TO REMAIN IN PLACE. SEE NOTES 5 AND 6 ON SHEET 9.

VT 2B STA 63+75.00
END PROJECT
BEGIN APPROACH

VT 2B STA 65+75.00
END APPROACH

BENCH MARK
CHISELED SQUARE
ON BOUNDRY MARKER
ELEV= 703.27

LAMOILLE VALLEY RAIL TRAIL

VT 2B TO DANVILLE

VT 2B TO ST. JOHNSBURY

APPROX. EXISTING ROW

UP #1 UP #2 UP #3 UP #3A UP #4 UP #4A UP #5 UP #6 UP #7

NOTES

1. SEE THE UTILITY SPECIAL PROVISIONS FOR ADDITIONAL INFORMATION AND REQUIREMENTS.

2. ALL RELOCATIONS SHALL BE COMPLETED BY OTHERS PRIOR TO BRIDGE/ROAD CONSTRUCTION.

0 20 40
(SCALE 1" = 20')

CONSULTING ENGINEERS

PROJECT NAME:	ST. JOHNSBURY
PROJECT NUMBER:	BF 7000(20)
FILE NAME: 86e048/cos/z86e048bdrutl.dgn	PLOT DATE: 10/26/2016
PROJECT LEADER: J.BYATT	DRAWN BY: W.GORDON
DESIGNED BY: M.HALEY	CHECKED BY: P.SHEDD
UTILITY RELOCATION SHEET	SHEET 24 OF 70

CLD 14-016 MODEL: L01

TEMPORARY 4 INCH WHITE LINE, PAINT
DURABLE 4 INCH WHITE LINE
61+00 TO 65+75 LT & RT

TEMPORARY 4 INCH YELLOW LINE, PAINT
DURABLE 4 INCH YELLOW LINE
61+00 TO 65+75 LT & RT

REMOVING SIGNS
AS SHOWN - 8

ERECTING SALVAGED SIGNS
AS SHOWN - 2

N15°50'21.81"E
LAMOILLE VALLEY RAIL TRAIL

VT 2B
TO DANVILLE

APPROX. EXISTING ROW

50' RIGHT OF WAY

BENCH MARK
CHISELED SQUARE
ON BOUNDRY MARKER
ELEV= 703.27

59+81 RT
59+81 RT

VT 2B STA 61+00.00
BEGIN APPROACH

VT 2B STA 62+87.18 =
RAIL TRAIL STA 79+60.89

VT 2B STA 62+00.00
END APPROACH
BEGIN PROJECT

63+45 LT

63+99 LT

64+48 LT
WEIGHT LIMIT
8T
20T
22T
35T

VT 2B STA 65+75.00
END APPROACH

64+68 RT
R & S
HIDDEN DRIVES
R & S

61+38 RT
BRIDGE ICES BEFORE ROAD

61+82 RT
WEIGHT LIMIT
8T
20T
22T
35T

62+22 RT
BRIDGE 6 VT 28

62+30 RT
BRIDGE 6 VT-28

VT 2B STA 63+75.00
END PROJECT
BEGIN APPROACH

63+90 RT
HIDDEN DRIVES

VT 2B
TO ST. JOHNSBURY

VT STATE PLANE GRID

LEGEND

N	NEW SIGN
RET	RETAIN SIGN
S	SALVAGE SIGN
R	REMOVE SIGN

EXISTING BRIDGE DATA
THREE SPAN ROLLED BEAM,
CONCRETE DECK BUILT 1936.
129' LENGTH, 42' MAX SPAN
26'-5" MIN UNDERCLEAR.

0 20 40
(SCALE 1" = 20')

CONSULTING ENGINEERS

PROJECT NAME:	ST. JOHNSBURY
PROJECT NUMBER:	BF 7000(20)
FILE NAME: 86e048/cos/z86e048bdrts.dgn	PLOT DATE: 10/26/2016
PROJECT LEADER: J.BYATT	DRAWN BY: W.GORDON
DESIGNED BY: M.HALEY	CHECKED BY: P.SHEDD
SIGNING AND STRIPING LAYOUT SHEET	SHEET 25 OF 70

CLD 14-016

STATE OF VERMONT
AGENCY OF TRANSPORTATION

TRAFFIC SIGN SUMMARY

SHSM = FHWA 2004 STANDARD HIGHWAY SIGNS AND MARKINGS BOOK AND THE 2012 SUPPLEMENT TO THE 2004 EDITION

MILEMARKER, STATION, OR SIGN NUMBER	SIGN LEGEND	SIGN DIMENSIONS EA	WIDTH (In)	HEIGHT (In)	NEW & SALVAGED SIGNS "A"	"B"	SALV SIGN	SALV TIS	EXIST POST RETAIN	EXIST POST SALVAGE	NEW SIGN POSTS NO. OF POSTS	SQUARE STEEL (In) 1.75 lb/ft 1.88	2.0 lb/ft 2.42	2.5 lb/ft 3.35	ANCHOR	SLEEVE	TUBULAR ALUMINUM Ø (In) 3.0 lb/ft 1.3	4.0 lb/ft 1.7	4.0 MOD lb/ft 1.7	TUBULAR STEEL Ø (In) FOUNDATION	3.0 lb/ft 7.6	3.5 lb/ft 9.0	4.0 lb/ft 10.8	5.0 lb/ft 14.6	W-SHAPE STEEL FTG. SIZE 24"	30"	WEIGHT	POST SIZE	SIGN REQUIRED	REMARKS	SIGN DETAIL SHSM	DETAIL ON SHEET NUMBER	STD. SHEET NUMBER
59+81 RT		1	30	30	6.25						1		X		X																WI-2L		
62+30 RT		1	6	10	0.42						1	X			X																VD-701		T-42
63+45 LT		1	6	10	0.42						1	X			X																VD-701		T-42
63+90 RT							1				2		X		X																		
							1																										
	ROUNDING				0.91																												
FINAL POST LENGTHS ARE TO BE DETERMINED IN THE FIELD. POST SIZES ARE COMPUTED BASED ON INFORMATION FURNISHED ON THE STANDARD SHEETS AND VAOT "SIGN POST DESIGN GUIDELINE."												FT 20	FT 55	FT		EA	LB	LB	LB		LB	LB	LB	LB									
	PROJECT TOTAL	SF 8.00	SF	SF	EA. 2	SF						FT 75					LB			EA.	LB				EA.	EA.	LB						

SIGN DESIGN AND FABRICATION NOTES

1. ALL SIGNS SHALL BE DESIGNED IN ACCORDANCE WITH THE LATEST REVISION OF THE MUTCD, THE 2004 STANDARD HIGHWAY SIGNS AND MARKINGS (SHSM), AND THE 2012 SUPPLEMENT TO THE 2004 EDITION (SHSM) DETAILS AS AVAILABLE, VAOT STANDARDS OR AS DETAILED IN THE PLANS.
2. ALL LETTERS AND NUMBERS USED FOR ALL SIGNS SHALL CONFORM TO THE APPLICABLE FONT AS DEFINED AND DETAILED IN THE 2004 SHSM AND THE 2012 SUPPLEMENT.
3. ALL ARROWS AND SYMBOLS SHALL CONFORM WITH THE 2004 SHSM AND THE 2012 SUPPLEMENT UNLESS OTHERWISE DETAILED IN THE PLANS.
4. COLORS USED ON ALL SIGNS SHALL CONFORM WITH THE REQUIREMENTS OF SECTION 1A.12 OF THE 2009 MUTCD AND LATEST REVISIONS.
5. SHEETING TYPES AND MANUFACTURERS SHALL NOT BE MIXED ON A SINGLE SIGN ASSEMBLY. SHEETING COLOR/TYPE SHALL BE BY THE SAME MANUFACTURER AND BE CONSISTENT THROUGHOUT THE PROJECT UNLESS OTHERWISE DETAILED ON THE PLANS.

SIGN POST NOTES

1. ALL SIGN POSTS SHALL BE INSTALLED IN A NEW ANCHOR. ALL SIGNS INSTALLED IN PAVED OR CONCRETE ISLANDS OR SIDEWALKS SHALL ALSO BE INSTALLED WITH AN 18" SLEEVE. PAYMENT FOR SLEEVE WILL BE CONSIDERED INCIDENTAL TO 675.341, "SQUARE TUBE SIGN POST AND ANCHOR".
2. 1.75" SQUARE STEEL POSTS SHALL BE 14 GAUGE STEEL. 2.0" AND 2.5" SQUARE STEEL POSTS SHALL BE 12 GAUGE STEEL.

SIGN INSTALLATION NOTES

1. THE CONTRACTOR SHALL BE RESPONSIBLE FOR REPAIRING ANY DAMAGE TO PRIVATE OR PUBLIC PROPERTY CAUSED BY THE CONTRACTOR, AT NO COST TO THE STATE.
2. ALL SIGNS WITHIN THE PROJECT LIMITS ARE TO BE RETAINED, REMOVED, OR REPLACED AS NOTED OR AS DIRECTED BY THE ENGINEER. SIGN LOCATIONS AS SHOWN ON THE PLANS ARE APPROXIMATE. EXACT LOCATIONS TO BE DETERMINED IN THE FIELD.
3. ALL SIGN PLACEMENT SHALL BE IN CONFORMANCE WITH VTRANS STANDARD E-121 STANDARD SIGN PLACEMENT CONVENTIONAL ROADS, UNLESS OTHERWISE NOTED.
4. ALL SIGNS, FRAMES, MOUNTING HARDWARE, POSTS, AND ANCHORS FOR ANY SIGN ASSEMBLY SHALL BE REPLACED AT THE SAME TIME. MIXING OF OLD AND NEW SIGNS ON THE SAME ASSEMBLY WILL NOT BE ALLOWED EXCEPT AS NOTED ON THE PLANS.
5. NEW SIGNS WITH THEIR GREATER NIGHTTIME REFLECTIVITY CAN OBSCURE OLDER SIGNS MOUNTED ADJACENT TO THEM. TO AVOID CONFUSION OF ROAD USERS, WORK SHALL BE COORDINATED SUCH THAT ALL SIGNS ASSOCIATED WITH A CURVE, INTERSECTION, OR SPEED CHANGE, SHALL BE REPLACED ON THE SAME DAY AND NOT LEFT INCOMPLETE NOR WITH A MIXTURE OF OLD AND NEW SIGNS WITHIN A GROUP OF ASSOCIATED SIGNS.

PROJECT NAME: ST. JOHNSBURY
PROJECT NUMBER: BF 7000(20)

FILE NAME: 86e048/cos/z86e048frm.dgn
PROJECT LEADER: J.BYATT
DESIGNED BY: M.HALEY
SIGN DETAIL SHEET

PLOT DATE: 10/26/2016
DRAWN BY: S.GOODWIN
CHECKED BY: P.SHEDD
SHEET 26 OF 70

CLD 14-0116

SOIL CLASSIFICATION

AASHTO	
A1	Gravel and Sand
A3	Fine Sand
A2	Silty or Clayey Gravel and Sand
A4	Silty Soil - Low Compressibility
A5	Silty Soil - Highly Compressible
A6	Clayey Soil - Low Compressibility
A7	Clayey Soil - Highly Compressible

ROCK QUALITY DESIGNATION

R.Q.D. (%)	ROCK DESCRIPTION
<25	Very Poor
25 to 50	Poor
51 to 75	Fair
76 to 90	Good
>90	Excellent

SHEAR STRENGTH

UNDRAINED SHEAR STRENGTH IN P.S.F.	CONSISTENCY
<250	Very Soft
250-500	Soft
500-1000	Med. Stiff
1000-2000	Stiff
2000-4000	Very Stiff
>4000	Hard

CORRELATION GUIDE OF "N" TO DENSITY/CONSISTENCY

DENSITY (GRANULAR SOILS)		CONSISTENCY (COHESIVE SOILS)	
N	DESCRIPTIVE TERM	N	DESCRIPTIVE TERM
<5	Very Loose	<2	Very Soft
5-10	Loose	2-4	Soft
11-24	Med. Dense	5-8	Med. Stiff
25-50	Dense	9-15	Stiff
>50	Very Dense	16-30	Very Stiff
		31-60	Hard
		>60	Very Hard

COMMONLY USED SYMBOLS

▼	Water Elevation
⊕	Standard Penetration Boring
⊕	Auger Boring
⊙	Rod Sounding
S	Sample
N	Standard Penetration Test Blow Count Per Foot For: 2" O.D. Sampler 1 3/8" I.D. Sampler Hammer Weight Of 140 Lbs. Hammer Fall Of 30"
VS	Field Vane Shear Test
US	Undisturbed Soil Sample
B	Blast
DC	Diamond Core
MD	Mud Drill
WA	Wash Ahead
HSA	Hollow Stem Auger
AX	Core Size 1 1/8"
BX	Core Size 1 5/8"
NX	Core Size 2 1/8"
M	Double Tube Core Barrel Used
LL	Liquid Limit
PL	Plastic Limit
PI	Plasticity Index
NP	Non Plastic
w	Moisture Content (Dry Wgt. Basis)
D	Dry
M	Moist
MTW	Moist To Wet
W	Wet
Sat	Saturated
Bo	Boulder
Gr	Gravel
Sa	Sand
SI	Silt
Cl	Clay
HP	Hardpan
Le	Ledge
NLTD	No Ledge To Depth
CNPF	Can Not Penetrate Further
TLOB	Top of Ledge Or Boulder
NR	No Recovery
Rec.	Recovery
%Rec.	Percent Recovery
RQD	Rock Quality Designation
CBR	California Bearing Ratio
<	Less Than
>	Greater Than
R	Refusal (N > 100)
VTSPG	NAD83 - See Note 7

COLOR

blk	Black	pnk	Pink
bl	Blue	pu	Purple
brn	Brown	rd	Red
dk	Dark	tn	Tan
gry	Gray	wh	White
gn	Green	yel	Yellow
lt	Light	mltc	Multicolored
or	Orange		

DEFINITIONS (AASHTO)

BEDROCK (LEDGE) - Rock in its native location of indefinite thickness.

BOULDER - A rock fragment with an average dimension > 12 inches.

COBBLE - Rock fragments with an average dimension between 3 and 12 inches.

GRAVEL - Rounded particles of rock < 3" and > 0.0787" (#10 sieve).

SAND - Particles of rock < 0.0787" (#10 sieve) and > 0.0029" (#200 sieve).

SILT - Soil < 0.0029" (#200 sieve), non or slightly plastic and exhibits no strength when air-dried.

CLAY - Fine grained soil, exhibits plasticity when moist and considerable strength when air-dried.

VARVED - Alternate layers of silt and clay.

HARDPAN - Extremely dense soil, cemented layer, not softened when wet.

MUCK - Soft organic soil (containing > 10% organic material.

MOISTURE CONTENT - Weight of water divided by dry weight of soil.

FLOWING SAND - Granular soil so saturated (loose) that it flows into drill casing during extraction of wash rod.

STRIKE - Angle from magnetic north to line of intersection of bed with a horizontal plane.

DIP - Inclination of bed with a horizontal plane.

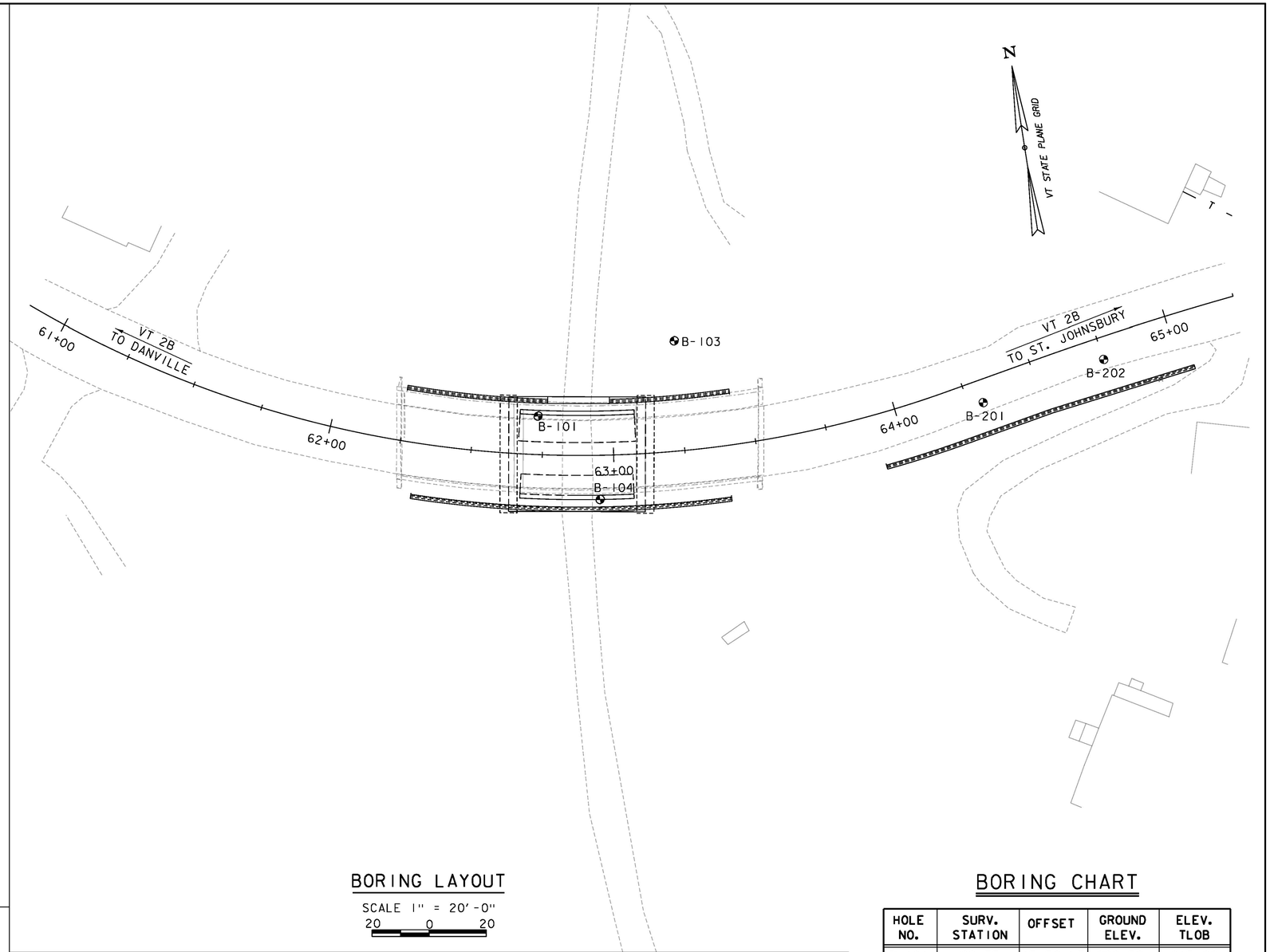

BORING LAYOUT

SCALE 1" = 20'-0"

20 0 20

GENERAL NOTES

1. The subsurface explorations shown herein were made between June 2, 2014 and June 18, 2014 by the Agency.
2. Soil and rock classifications, properties and descriptions are based on engineering interpretation from available subsurface information by the Agency and may not necessarily reflect actual variations in subsurface conditions that may be encountered between individual boring or sample locations.
3. Observed water levels and/or conditions indicated are as recorded at the time of exploration and may vary according to the prevailing rainfall, methods of exploration and other factors.
4. Engineering judgment was exercised in preparing the subsurface information presented herein. Analysis and interpretation of subsurface data was performed and interpreted for Agency design and estimating purposes. Presentation of the information in the Contract is intended to provide the Contractor access to the same data available to the Agency. The subsurface information is presented in good faith and is not intended as a substitute for personal investigation, independent interpretation, independent analysis or judgment by the Contractor.
5. Pictorial structure details shown on the boring plan layout or soils profile are for illustrative purposes only and may not accurately portray final contract details.
6. Terminology used on boring logs to describe the hardness, degree of weathering, and spacing of fractures, joints and other discontinuities in the bedrock is defined in the AASHTO Manual on Subsurface Investigations, 1988.
7. Northing and Easting coordinates are shown in Vermont State Plane Grid North American Datum 1983 in meters and survey feet.

BORING CHART

HOLE NO.	SURV. STATION	OFFSET	GROUND ELEV.	ELEV. TLOB
B-101	62+73	13.50 LT	666.56	615.66
B-103	63+25	38.60 LT	672.38	608.98
B-104	62+95	15.50 RT	664.61	606.91
B-201	64+30	7.90 RT	692.94	-
B-202	64+75	7.70 RT	692.28	-

PROJECT NAME: ST. JOHNSBURY

PROJECT NUMBER: BF 7000(20)

FILE NAME: 86e048/cos/z86e048bor.dgn
PROJECT LEADER: J. BYATT
DESIGNED BY: A. GIRALDI
BORING INFORMATION SHEET

PLOT DATE: 10/26/2016
DRAWN BY: M. SMITH
CHECKED BY: S. BEAUMONT
SHEET 27 OF 70

CLD 14-016 MODEL: BOR01

APPROX. BOTTOM OF FOOTING EL. 664.58'

STATE OF VERMONT
AGENCY OF TRANSPORTATION
MATERIALS & RESEARCH SECTION
SUBSURFACE INFORMATION

BORING LOG

ST. JOHNSBURY
BF 7000(20)
VT-2B BR-6

Boring No.: **B-101**
Page No.: 1 of 2
Pin No.: 86E048
Checked By: END

Boring Crew: JUDKINS, HOOK, NIETO
Date Started: 6/02/14 Date Finished: 6/04/14
VTSPG NAD83: N 700863.33 ft E 1761651.05 ft
Station: 62+73 Offset: -13.50
Ground Elevation: 666.56 ft

	Casing	Sampler
Type:	WB	SS
I.D.:	4 in	1.5 in
Hammer Wt:	N.A.	140 lb.
Hammer Fall:	N.A.	30 in.
Hammer/Rod Type:	Auto/AWJ	
Rig:	CME 55 TRACK	C_E = 1.46

Groundwater Observations

Date	Depth (ft)	Notes
06/03/14	5.3	While drilling.
06/04/14	5.5	While drilling.

Depth (ft)	Strata (1)	CLASSIFICATION OF MATERIALS (Description)	Run (Dip deg.)	Core Rec. % (RQD %)	Drill Rate min/ft/ft	Blows/6" (N Value)	Moisture Content %	Gravel %	Sand %	Fines %	LL %	PI %
		A-2-4, GrSiSa, brn, Wet, Rec. = 0.5 ft				WH-WH-WH-WH (WH)	19.7	23.5	41.0	35.5		
		A-4, SaSi, gry, Wet, Rec. = 1.8 ft, Cleaned out with roller cone.				WH-2-2-WH (4)	23.6	8.5	30.7	60.8		
5		A-6, SiCl, gry, MTW, Rec. = 2.0 ft, Lab Note: Material from Triaxial test "A".					37.7		1.5	98.5	38	15
		A-7-6, Cl, gry, MTW, Rec. = 2.0 ft, Lab Note: Sample was taken right after Consolidation sample.					43.2		0.2	99.8	41	20
		A-7-6, Cl, gry, MTW, Material from Triaxial sample "B".					39.6		0.3	99.7	41	20
		A-4, Si, gry, MTW, Rec. = 2.0 ft				WH-WH-1-2 (1)	40.8	5.4	4.4	90.2	27	6
10		A-6, SiCl, gry, MTW, Rec. = 2.0 ft, Cleaned out with roller cone.				WH-WH-WH-1 (WH)	40.0	0.3	3.8	95.9	36	14
		A-6, SiCl, gry, MTW, Rec. = 2.0 ft, Artesian conditions at 14.0 feet. Cleaned out casing with roller cone.				WH-1-1-2 (2)	37.4		5.0	95.0	34	14
15		A-6, SiCl, gry, MTW, Rec. = 2.0 ft				WH-1-1-2 (2)	37.0		4.5	95.5	32	12
		A-4, Si, gry, MTW, Rec. = 2.0 ft				WH-1-WH-2 (1)	33.0		1.8	98.2	28	5
		A-4, Si, gry, MTW, Rec. = 1.7 ft				WH-1-1-2 (2)	32.4		1.7	98.3	27	2
20		A-4, Si, gry, MTW, Rec. = 1.8 ft				4-4-4-4 (8)	23.2	9.8	11.5	78.7		
		Field Note:, Roller coned ahead										
25		A-2-4, SiSaGr, gry, Wet, Rec. = 0.6 ft, Lab Note: Broken Rock was within sample.				29-11-9-6 (20)	9.6	37.3	35.4	27.3		
		Field Note:, NXDC										

Notes:
1. Stratification lines represent approximate boundary between material types. Transition may be gradual.
2. N Values have not been corrected for hammer energy. C_E is the hammer energy correction factor.
3. Water level readings have been made at times and under conditions stated. Fluctuations may occur due to other factors than those present at the time measurements were made.

BORING LOG 2 ST JOHNSBURY BF 7000(20).GPJ VERMONT AOT.GDT 1/22/15

STATE OF VERMONT
AGENCY OF TRANSPORTATION
MATERIALS & RESEARCH SECTION
SUBSURFACE INFORMATION

BORING LOG

ST. JOHNSBURY
BF 7000(20)
VT-2B BR-6

Boring No.: **B-101**
Page No.: 2 of 2
Pin No.: 86E048
Checked By: END

Boring Crew: JUDKINS, HOOK, NIETO
Date Started: 6/02/14 Date Finished: 6/04/14
VTSPG NAD83: N 700863.33 ft E 1761651.05 ft
Station: 62+73 Offset: -13.50
Ground Elevation: 666.56 ft

	Casing	Sampler
Type:	WB	SS
I.D.:	4 in	1.5 in
Hammer Wt:	N.A.	140 lb.
Hammer Fall:	N.A.	30 in.
Hammer/Rod Type:	Auto/AWJ	
Rig:	CME 55 TRACK	C_E = 1.46

Groundwater Observations

Date	Depth (ft)	Notes
06/03/14	5.3	While drilling.
06/04/14	5.5	While drilling.

Depth (ft)	Strata (1)	CLASSIFICATION OF MATERIALS (Description)	Run (Dip deg.)	Core Rec. % (RQD %)	Drill Rate min/ft/ft	Blows/6" (N Value)	Moisture Content %	Gravel %	Sand %	Fines %	LL %	PI %
		Field Note:, No Recovery.				R@0.0" (R)						
		Field Note:, NXDC										
35		A-4, SaSi, gry, Wet, Rec. = 0.5 ft, Lab Note: Broken Rock was within sample.				R@6.0" (R)	9.8	15.5	34.7	49.8		
		Field Note:, NXDC										
40		A-4, GrSaSi, gry, Moist, Rec. = 0.9 ft, Lab Note: Broken Rock was within sample.				48-R@5.0" (R)	8.6	20.0	27.9	52.1		
		Field Note:, NXDC										
45		Visual Description:, SaSiGr, gry, Moist, Rec. = 0.1 ft, Lab Note: Broken Rock was within sample.				R@1.0" (R)	9.3					
		Field Note:, NXDC										
50		A-4, SiSa, gry, Moist, Rec. = 0.2 ft, Lab Note: Broken Rock was within sample.				R@2.5" (R)	7.0	19.2	43.6	37.2		
		50.9 ft - 55.9 ft, Bluish-gray, Silicous Meta-Limestone, Hard, Unweathered, Good rock, NXMDC, Rock is Micaceous from 50.9 to 54.0 feet. RMR = 72	1 (?)	100 (62)	5 4 3 2 2	Top of Bedrock @ 50.9 ft						
55		Hole stopped @ 55.9 ft										

Remarks:
Hole collapsed at 25.5 ft.

Notes:
1. Stratification lines represent approximate boundary between material types. Transition may be gradual.
2. N Values have not been corrected for hammer energy. C_E is the hammer energy correction factor.
3. Water level readings have been made at times and under conditions stated. Fluctuations may occur due to other factors than those present at the time measurements were made.

BORING LOG 2 ST JOHNSBURY BF 7000(20).GPJ VERMONT AOT.GDT 1/22/15

CLD 14-0116 MODEL: BOR02

CONSULTING ENGINEERS

PROJECT NAME: ST. JOHNSBURY
PROJECT NUMBER: BF 7000(20)

FILE NAME: 86e048/cos/z86e048bor.dgn
PROJECT LEADER: J. BYATT
DESIGNED BY: A. GIRALDI
BORING LOGS SHEET 1

PLOT DATE: 10/26/2016
DRAWN BY: M. SMITH
CHECKED BY: S. BEAUMONT
SHEET 28 OF 70

STATE OF VERMONT
AGENCY OF TRANSPORTATION
MATERIALS & RESEARCH SECTION
SUBSURFACE INFORMATION

BORING LOG

ST. JOHNSBURY
BF 7000(20)
VT-2B BR-6

Boring No.: **B-103**
Page No.: 1 of 3
Pin No.: 86E048
Checked By: END

Boring Crew: HOOK, DAIGNEAULT
Date Started: 6/16/14 Date Finished: 6/18/14
VTSPG NAD83: N 700872.66 ft E 1761696.27 ft
Station: 63+25 Offset: -38.60
Ground Elevation: 672.38 ft

	Casing	Sampler
Type:	WB	SS
I.D.:	4 in	1.5 in
Hammer Wt:	N.A.	140 lb.
Hammer Fall:	N.A.	30 in.
Hammer/Rod Type:		Auto/AWJ
Rig:	CME 55 TRACK	C_E = 1.46

Groundwater Observations

Date	Depth (ft)	Notes
06/17/14	11.8	While drilling.
06/18/14	11.2	While drilling.

Depth (ft)	Strata (1)	CLASSIFICATION OF MATERIALS (Description)	Run (Dip deg.)	Core Rec. % (RQD %)	Drill Rate minutes/ft	Blows/6" (N Value)	Moisture Content %	Gravel %	Sand %	Fines %	LL %	PI %
		A-4, SaSi, brn, Moist, Rec. = 0.4 ft, Cleaned out with roller cone.				WH-WH-1-1 (1)	21.9	3.0	48.3	48.7		
		A-4, ClSi, brn-gry, Moist, Rec. = 1.8 ft, Cleaned out with roller cone.				1-1-1-2 (2)	31.5		3.4	96.6	28	8
5		A-6, SiCl, gry, Moist, Rec. = 2.0 ft, Cleaned out with roller cone.				WH-WH-WH-WH (WH)	37.6		0.2	99.8	32	13
		A-6, SiCl, gry, Moist, Rec. = 2.0 ft, Cleaned out with roller cone. Material from Consolidation sample & Triaxial T-208 tube sample "A".					42.4		0.2	99.8	39	19
							49.0		0.8	99.2	47	24
		A-7-6, Cl, gry, Moist, Material from Triaxial T-208 "B & C" tube samples.					45.7		0.9	99.1	45	22
		A-7-6, Cl, gry, Moist, Rec. = 2.0 ft, Material from Consolidation sample & Triaxial T-208 tube sample "A".					48.8		0.5	99.5	50	25
10		A-7-6, Cl, gry, Moist, Material from Triaxial T-208 "B & C" tube samples.					42.7					
		Visual Description:, SiCl, gry, Moist, Rec. = 2.0 ft, Lab Note: Material similar as 12-14 ft.				(WH)						
		A-6, SiCl, gry, Moist, Rec. = 2.0 ft, Cleaned out with roller cone.				(WH)	41.0		0.3	99.7	36	16
15		Visual Description:, SiCl, gry, Moist, Rec. = 2.0 ft, Lab Note: Material similar as 16-18 ft.				(WH)	40.5					
		A-6, SiCl, gry, Moist, Rec. = 2.0 ft, Cleaned out with roller cone.				(WH)	41.3	7.3	0.2	92.5	39	18
		Visual Description:, SiCl, gry, Moist, Rec. = 2.0 ft, Lab Note: Material similar as 20-22 ft.				WH-2-2-1 (4)	34.5					
20		A-6, SiCl, gry, Moist, Rec. = 2.0 ft				WH-1-2-1 (3)	37.7		0.4	99.6	36	16
		Field Note:, Cleaned out with roller cone										
25		A-4, ClSi, gry, Moist, Rec. = 2.0 ft				WH-1-1-2 (2)	30.6		0.3	99.7	28	9

Notes:
1. Stratification lines represent approximate boundary between material types. Transition may be gradual.
2. N Values have not been corrected for hammer energy. C_E is the hammer energy correction factor.
3. Water level readings have been made at times and under conditions stated. Fluctuations may occur due to other factors than those present at the time measurements were made.

BORING LOG 2 ST JOHNSBURY BF 7000(20).GPJ VERMONT AOT.GDT 1/22/15

STATE OF VERMONT
AGENCY OF TRANSPORTATION
MATERIALS & RESEARCH SECTION
SUBSURFACE INFORMATION

BORING LOG

ST. JOHNSBURY
BF 7000(20)
VT-2B BR-6

Boring No.: **B-103**
Page No.: 2 of 3
Pin No.: 86E048
Checked By: END

Boring Crew: HOOK, DAIGNEAULT
Date Started: 6/16/14 Date Finished: 6/18/14
VTSPG NAD83: N 700872.66 ft E 1761696.27 ft
Station: 63+25 Offset: -38.60
Ground Elevation: 672.38 ft

	Casing	Sampler
Type:	WB	SS
I.D.:	4 in	1.5 in
Hammer Wt:	N.A.	140 lb.
Hammer Fall:	N.A.	30 in.
Hammer/Rod Type:		Auto/AWJ
Rig:	CME 55 TRACK	C_E = 1.46

Groundwater Observations

Date	Depth (ft)	Notes
06/17/14	11.8	While drilling.
06/18/14	11.2	While drilling.

Depth (ft)	Strata (1)	CLASSIFICATION OF MATERIALS (Description)	Run (Dip deg.)	Core Rec. % (RQD %)	Drill Rate minutes/ft	Blows/6" (N Value)	Moisture Content %	Gravel %	Sand %	Fines %	LL %	PI %
30		Visual Description:, Broken Rock with silt & little clay, gry, MTW, Rec. = 0.5 ft, Insufficient sample for testing.				3-5-3-6 (8)	13.2					
35		A-4, GrSiSa (HP), gry, Moist, Rec. = 0.3 ft				R@3.5" (R)	8.0	21.7	39.7	38.6		
		Field Note:, Cleaned out with roller cone										
40		A-4, SiSa (HP), gry, Moist, Rec. = 0.3 ft				R@3.5" (R)	8.6	18.2	41.5	40.3		
		Field Note:, Cleaned out with roller cone										
45		A-4, SaSi (HP), gry, Moist, Rec. = 0.9 ft				35-R@5.0" (R)	9.2	14.7	36.2	49.1		
		Field Note:, Cleaned out with roller cone										
50		A-2-4, SaSiGr, gry, Moist, Rec. = 0.7 ft, Lab Note: Broken Rock was within sample.				35-R@2.5" (R)	7.1	41.5	26.4	32.1		
		Field Note:, Cleaned out with NXDC										

Notes:
1. Stratification lines represent approximate boundary between material types. Transition may be gradual.
2. N Values have not been corrected for hammer energy. C_E is the hammer energy correction factor.
3. Water level readings have been made at times and under conditions stated. Fluctuations may occur due to other factors than those present at the time measurements were made.

BORING LOG 2 ST JOHNSBURY BF 7000(20).GPJ VERMONT AOT.GDT 1/22/15

STATE OF VERMONT
AGENCY OF TRANSPORTATION
MATERIALS & RESEARCH SECTION
SUBSURFACE INFORMATION

BORING LOG

ST. JOHNSBURY
BF 7000(20)
VT-2B BR-6

Boring No.: **B-103**
Page No.: 3 of 3
Pin No.: 86E048
Checked By: END

Boring Crew: HOOK, DAIGNEAULT
Date Started: 6/16/14 Date Finished: 6/18/14
VTSPG NAD83: N 700872.66 ft E 1761696.27 ft
Station: 63+25 Offset: -38.60
Ground Elevation: 672.38 ft

	Casing	Sampler
Type:	WB	SS
I.D.:	4 in	1.5 in
Hammer Wt:	N.A.	140 lb.
Hammer Fall:	N.A.	30 in.
Hammer/Rod Type:		Auto/AWJ
Rig:	CME 55 TRACK	C_E = 1.46

Groundwater Observations

Date	Depth (ft)	Notes
06/17/14	11.8	While drilling.
06/18/14	11.2	While drilling.

Depth (ft)	Strata (1)	CLASSIFICATION OF MATERIALS (Description)	Run (Dip deg.)	Core Rec. % (RQD %)	Drill Rate minutes/ft	Blows/6" (N Value)	Moisture Content %	Gravel %	Sand %	Fines %	LL %	PI %
55		A-4, SaGrSi, gry, Moist, Rec. = 0.4 ft				R@5.0" (R)	8.2	33.1	30.2	36.7		
		Field Note:, Cleaned out with NXDC										
60		A-4, GrSaSi, gry, Moist, Rec. = 1.0 ft, Lab Note: Broken Rock was within sample.				44-48-R@1.0" (R)	8.1	25.1	31.7	43.2		
		63.4 ft - 68.4 ft, Bluish-gray, Micaceous silicous Meta-Limestone, Hard, Unweathered, Good rock, NXMDC, RMR = 72	1 (30)	96 (56)	4 5 5 7 5							
65		Top of Bedrock @ 63.4 ft										
70		68.4 ft - 73.4 ft, Bluish-gray, Micaceous silicous Meta-Limestone, Hard, Unweathered, Very good rock, NXMDC, RMR = 84	2 (?)	100 (100)	2 2 2 2 2							
		Hole stopped @ 73.4 ft										
75		Remarks: Hole collapsed at 59.2 ft.										
80												

Notes:
1. Stratification lines represent approximate boundary between material types. Transition may be gradual.
2. N Values have not been corrected for hammer energy. C_E is the hammer energy correction factor.
3. Water level readings have been made at times and under conditions stated. Fluctuations may occur due to other factors than those present at the time measurements were made.

BORING LOG 2 ST JOHNSBURY BF 7000(20).GPJ VERMONT AOT.GDT 1/22/15

CLD 14-0116 MODEL: BOR03

CONSULTING ENGINEERS

PROJECT NAME: ST. JOHNSBURY
PROJECT NUMBER: BF 7000(20)

FILE NAME: 86e048/cos/z86e048bor.dgn
PROJECT LEADER: J. BYATT
DESIGNED BY: A. GIRALDI
BORING LOGS SHEET 2

PLOT DATE: 10/26/2016
DRAWN BY: M. SMITH
CHECKED BY: S. BEAUMONT
SHEET 29 OF 70

APPROX. BOTTOM OF FOOTING EL. 664.58'

STATE OF VERMONT
AGENCY OF TRANSPORTATION
MATERIALS & RESEARCH SECTION
SUBSURFACE INFORMATION

BORING LOG

ST. JOHNSBURY
BF 7000(20)
VT-2B BR-6

Boring No.: **B-104**
Page No.: 1 of 2
Pin No.: 86E048
Checked By: END

Boring Crew: JUDKINS, HOOK, DAIGNEAULT
Date Started: 6/04/14 Date Finished: 6/05/14
VTSPG NAD83: N 700829.18 ft E 1761670.17 ft
Station: 62+95 Offset: 15.50
Ground Elevation: 664.61 ft

	Casing	Sampler
Type:	WB	SS
I.D.:	4 in	1.5 in
Hammer Wt:	N.A.	140 lb.
Hammer Fall:	N.A.	30 in.
Hammer/Rod Type:	Auto/AWJ	
Rig:	CME 55 TRACK	C_E = 1.46

Groundwater Observations

Date	Depth (ft)	Notes
06/05/14	2.2	While drilling.

Depth (ft)	Strata (1)	CLASSIFICATION OF MATERIALS (Description)	Run (Dip deg.)	Core Rec. % (RQD %)	Drill Rate minute/ft	Blows/6" (N Value)	Moisture Content %	Gravel %	Sand %	Fines %	LL %	PI %
		A-4, SaSi, brn, Moist, Rec. = 0.4 ft, Lab Note: Sticks & Wood were within sample.				WH-1-WH-1 (1)	33.3	14.2	25.7	60.1		
		A-2-4, SiSa, brn, Moist, Rec. = 1.4 ft, Cleaned out with roller cone. Lab Note: Wood & Broken Rock were within sample.				8-3-3-6 (6)	18.6	17.6	54.4	28.0		
5		A-1-a, SaGr, brn, Moist, Rec. = 0.5 ft, Lab Note: Broken Rock was within sample.				11-R@5.0" (R)	8.3	61.3	25.5	13.2		
		Field Note:, Cleaned out with roller cone										
		A-6, SiCl, gry, MTW, Rec. = 2.0 ft				5-2-1-2 (3)	41.3	0.2	0.4	99.4	36	16
10		Field Note:, Attempted Shelby Tube sample, No Recovery.										
		Field Note:, Attempted Shelby Tube sample, No Recovery.										
		A-7-6, Cl, gry, MTW, Rec. = 2.0 ft, Cleaned out with roller cone.				5-6-2-2 (8)	45.0	3.8	0.4	95.8	45	23
15		A-6, SiCl, gry, MTW, Rec. = 2.0 ft, Cleaned out with roller cone.				WR-WR-2-2 (2)	40.3	4.6	0.5	94.9	38	17
		A-4, ClSi, gry, MTW, Rec. = 2.0 ft, Cleaned out with roller cone.				WH-WH-2-2 (2)	34.0	3.7	0.1	96.2	29	9
		A-4, ClSi, gry, MTW, Rec. = 2.0 ft				WH-1-1-2 (2)	30.7		0.4	99.6	27	7
20		A-4, Si, gry, MTW, Rec. = 2.0 ft, Lab Note: A very thin layer of clay was noticeable.				WH-1-2-3 (3)	30.9		0.7	99.3		
		Field Note:, Cleaned out with roller cone										
25		A-4, SaGrSi, gry, Moist, Rec. = 0.5 ft, Lab Note: Broken Rock was within sample.				16-16-10-17 (26)	10.6	32.0	31.4	36.6		
		Field Note:, Cleaned out with NXDC										
30		Field Note:, No Recovery				R@0.0" (R)						
		Field Note:, Cleaned out with NXDC										
35		A-4, SaSi, gry, Moist, Rec. = 0.3 ft				R@3.5" (R)	8.3	10.0	36.9	53.1		

Notes:
1. Stratification lines represent approximate boundary between material types. Transition may be gradual.
2. N Values have not been corrected for hammer energy. C_E is the hammer energy correction factor.
3. Water level readings have been made at times and under conditions stated. Fluctuations may occur due to other factors than those present at the time measurements were made.

BORING LOG 2 ST JOHNSBURY BF 7000(20).GPJ VERMONT AOT.GDT 1/22/15

STATE OF VERMONT
AGENCY OF TRANSPORTATION
MATERIALS & RESEARCH SECTION
SUBSURFACE INFORMATION

BORING LOG

ST. JOHNSBURY
BF 7000(20)
VT-2B BR-6

Boring No.: **B-104**
Page No.: 2 of 2
Pin No.: 86E048
Checked By: END

Boring Crew: JUDKINS, HOOK, DAIGNEAULT
Date Started: 6/04/14 Date Finished: 6/05/14
VTSPG NAD83: N 700829.18 ft E 1761670.17 ft
Station: 62+95 Offset: 15.50
Ground Elevation: 664.61 ft

Casing: Type: WB, I.D.: 4 in, Hammer Wt: N.A., Hammer Fall: N.A., Hammer/Rod Type: Auto/AWJ, Rig: CME 55 TRACK, C_E = 1.46
Sampler: SS, 1.5 in, 140 lb., 30 in.

Groundwater Observations

Date	Depth (ft)	Notes
06/05/14	2.2	While drilling.

Depth (ft)	Strata (1)	CLASSIFICATION OF MATERIALS (Description)	Run (Dip deg.)	Core Rec. % (RQD %)	Drill Rate minute/ft	Blows/6" (N Value)	Moisture Content %	Gravel %	Sand %	Fines %	LL %	PI %
		Field Note:, Cleaned out with NXDC										
40		A-2-4, GrSiSa, gry, Moist, Rec. = 0.3 ft, Lab Note: Broken Rock was within sample.				R@3.5" (R)	7.5	31.2	36.4	32.4		
		Field Note:, Cleaned out with NXDC										
45		A-4, SaGrSi, gry, Moist, Rec. = 0.9 ft, Lab Note: Broken Rock was within sample.				24-R@5.0" (R)	7.9	33.7	27.0	39.3		
		Field Note:, Cleaned out with NXDC										
50		A-4, GrSaSi, gry, Moist, Rec. = 0.4 ft, Lab Note: Broken Rock was within sample.				R@5.0" (R)	9.1	28.4	32.7	38.9		
		Field Note:, Cleaned out with NXDC										
55		A-4, SaSi, gry, Moist, Rec. = 1.2 ft				17-49-R@2.5" (R)	9.3	12.8	40.7	46.5		
60		57.7 ft - 62.7 ft, Bluish-gray, Silicous Meta-Limestone, Hard, Unweathered, Good rock, NXMDC, RMR = 76	1 (?)	90 (90)	3 4 3 3 3	Top of Bedrock @ 57.7 ft						
65		62.7 ft - 67.7 ft, Bluish-gray, Silicous Meta-Limestone, Hard, Unweathered, Good rock, NXMDC, RMR = 76	2 (?)	92 (92)	3 2 3 2 2							
70		Hole stopped @ 67.7 ft Remarks: Hole collapsed at 54.0 ft.										
75												

Notes:
1. Stratification lines represent approximate boundary between material types. Transition may be gradual.
2. N Values have not been corrected for hammer energy. C_E is the hammer energy correction factor.
3. Water level readings have been made at times and under conditions stated. Fluctuations may occur due to other factors than those present at the time measurements were made.

BORING LOG 2 ST JOHNSBURY BF 7000(20).GPJ VERMONT AOT.GDT 1/22/15

CLD 14-0116 MODEL: BOR04

CONSULTING ENGINEERS

PROJECT NAME: ST. JOHNSBURY
PROJECT NUMBER: BF 7000(20)

FILE NAME: 86e048/cos/z86e048bor.dgn
PROJECT LEADER: J. BYATT
DESIGNED BY: A. GIRALDI
BORING LOGS SHEET 3

PLOT DATE: 10/26/2016
DRAWN BY: M. SMITH
CHECKED BY: S. BEAUMONT
SHEET 30 OF 70

STATE OF VERMONT
AGENCY OF TRANSPORTATION
CONSTRUCTION AND
MATERIALS BUREAU
CENTRAL LABORATORY

BORING LOG

ST. JOHNSBURY
BF 7000(20)
VT-2B BR-6

Boring No.: **B-201**
Page No.: 1 of 1
Pin No.: 86E048
Checked By: END

Boring Crew: DAIGNEAULT, HOOK
Date Started: 9/15/14 Date Finished: 9/16/14
VTSPG NAD83: N 700842.01 ft E 1761805.42 ft
Station: 64+30 Offset: 7.90
Ground Elevation: 692.94 ft

	Casing	Sampler
Type:	WB	SS
I.D.:	4 in	1.5 in
Hammer Wt:	N.A.	140 lb.
Hammer Fall:	N.A.	30 in.
Hammer/Rod Type:	Auto/AWJ	
Rig:	CME 45C TRACK	C_E = 1.34

Groundwater Observations

Date	Depth (ft)	Notes
09/16/14	5.8	Casing removed.

Depth (ft)	Strata (1)	CLASSIFICATION OF MATERIALS (Description)	Blows/6" (N Value)	Moisture Content %	Gravel %	Sand %	Fines %	LL %	PI %
		Asphalt Pavement, 0.0 ft - 0.35 ft							
		Concrete, 0.35 ft - 0.95 ft	1-1-1-3 (2)	5.0	18.6	70.8	10.6		
		A-2-4, Sa, brn, Moist, Rec. = 1.1 ft, Lab Note: Some Broken Rock was within sample.	4-8-12-15 (20)	5.5	24.8	53.9	21.3		
		A-2-4, SiGrSa, brn, Moist, Rec. = 0.9 ft, Lab Note: Broken Rock was within sample.	7-7-5-3 (12)	5.0	10.7	10.2	68.5	21.3	
5		Visual Description:, Broken Concrete & Rock with sand, gry, Moist, Rec. = 0.4 ft							
		A-2-4, SiSa, brn, Moist, Rec. = 1.2 ft	6-4-4-3 (8)	16.6	1.0	61.7	37.3		
		A-4, SiSa, brn, Moist, Rec. = 1.0 ft, Cleaned out with roller cone.	4-3-3-2 (6)	22.2	5.1	53.0	41.9		
10		A-4, SiSa, brn, Moist, Rec. = 0.9 ft, Cleaned out with roller cone.	1-1-2-2 (3)	29.9		13.8	86.2		
		A-4, Si, brn, MTW, Rec. = 1.2 ft, Cleaned out with roller cone.	1-WH-WH-1 (WH)	33.0		1.6	98.4	25	1
		A-4, Si, brn, MTW, Rec. = 1.4 ft, Cleaned out with roller cone.	2-2-2-2 (4)	29.0		1.5	98.5	27	2
15		A-4, Si, brn, MTW, Rec. = 1.1 ft, Cleaned out with roller cone.							
		Field Note:, Pushed Shelby Tube, brn, Moist, Rec. = 2.0 ft, Appears to be Silty Clay.							
		Field Note:, Pushed Shelby Tube, Lt/brn, Moist, Rec. = 1.5 ft, Appears to be Silt.							
20		A-4, Si, brn, Moist, Rec. = 1.1 ft, Cleaned out with roller cone.	1-1-4-4 (5)	28.4		1.1	98.9	28	4
		A-4, Si, brn, Moist, Rec. = 1.5 ft	3-3-4-4 (7)	29.1		2.1	97.9		
		A-4, Si, brn, Moist, Rec. = 1.1 ft	2-2-2-3 (4)	28.7	0.1	4.6	95.3		
25									
30		A-4, Si, gry, Moist, Rec. = 1.4 ft	WH-3-1-2 (4)	27.8		3.1	96.9	25	2
		Hole stopped @ 32.0 ft							
35		Remarks: Hole collapsed at 29.1 ft.							

Notes:
1. Stratification lines represent approximate boundary between material types. Transition may be gradual.
2. N Values have not been corrected for hammer energy. C_E is the hammer energy correction factor.
3. Water level readings have been made at times and under conditions stated. Fluctuations may occur due to other factors than those present at the time measurements were made.

BORING LOG 2 ST JOHNSBURY BF 7000(20) GPJ VERMONT AOT.GDT 12/11/14

STATE OF VERMONT
AGENCY OF TRANSPORTATION
CONSTRUCTION AND
MATERIALS BUREAU
CENTRAL LABORATORY

BORING LOG

ST. JOHNSBURY
BF 7000(20)
VT-2B BR-6

Boring No.: **B-202**
Page No.: 1 of 1
Pin No.: 86E048
Checked By: END

Boring Crew: NIETO, DAIGNEAULT, HOOK
Date Started: 9/19/14 Date Finished: 9/19/14
VTSPG NAD83: N 700850.43 ft E 1761849.45 ft
Station: 64+75 Offset: 7.70
Ground Elevation: 692.28 ft

	Casing	Sampler
Type:	WB	SS
I.D.:	4 in	1.5 in
Hammer Wt:	N.A.	140 lb.
Hammer Fall:	N.A.	30 in.
Hammer/Rod Type:	Auto/AWJ	
Rig:	CME 45C TRACK	C_E = 1.34

Groundwater Observations

Date	Depth (ft)	Notes
09/19/14	3.3	Casing in ground.

Depth (ft)	Strata (1)	CLASSIFICATION OF MATERIALS (Description)	Blows/6" (N Value)	Moisture Content %	Gravel %	Sand %	Fines %	LL %	PI %
		Asphalt Pavement, 0.0 ft - 0.95 ft							
		A-2-4, Sa, brn, Moist, Rec. = 1.4 ft, Cleaned out casing with roller cone.	9-9-15-R@2.5" (24)	11.1	19.9	62.5	17.6		
		Field Note:, No Recovery. Appears to be Gravelly Sand, Cleaned out casing with roller cone.	21-8-3-4 (11)						
5		A-2-4, SiSa, brn, Moist, Rec. = 1.1 ft, Cleaned out casing with roller cone.	3-3-4-4 (7)	15.4	3.5	70.8	25.7		
		A-4, SaSi, brn, Moist, Rec. = 1.0 ft, Cleaned out casing with roller cone.	5-3-3-4 (6)	22.5	0.2	43.3	56.5		
		A-4, Si, brn, Moist, Rec. = 1.0 ft	1-2-1-2 (3)	29.4		5.5	94.5	28	2
10		A-4, Si, brn, Moist, Rec. = 1.5 ft, Cleaned out casing with roller cone.	2-2-2-1 (4)	29.4	0.2	5.5	94.3		
		A-4, Si, brn, MTW, Rec. = 1.6 ft, Cleaned out casing with roller cone.	1-1-1-1 (2)	31.8		1.4	98.6		
		A-4, Si, brn, MTW, Rec. = 1.5 ft, Cleaned out casing with roller cone.	WH-1-1-WH (2)	31.6	0.1	2.2	97.7		
15		A-4, Si, brn, MTW, Rec. = 1.9 ft, Cleaned out casing with roller cone.	WR-1-1-WH (2)	34.0		0.8	99.2	27	3
		A-4, Si, brn, MTW, Rec. = 1.8 ft, Cleaned out casing with roller cone.	WR-WR-3-1 (3)	31.6		1.0	99.0	26	2
		A-4, Si, brn, MTW, Rec. = 1.1 ft, Cleaned out casing with roller cone.	1-2-1-3 (3)	29.5		4.4	95.6		
20		A-4, Si, Lt/brn, MTW, Rec. = 1.0 ft, Lab Note: Sample was brownish-orange in color.	3-3-3-3 (6)	29.6		3.2	96.8		
		A-4, Si, brn, MTW, Rec. = 0.8 ft, Cleaned out casing with roller cone.	3-3-2-3 (5)	29.9		1.1	98.9		
25									
		A-4, Si, gry, MTW, Rec. = 1.5 ft	1-2-1-1 (3)	28.7		4.5	95.5	23	2
30		Hole stopped @ 32.0 ft							
		Remarks: Hole collapsed at 28.7 ft.							
35									

Notes:
1. Stratification lines represent approximate boundary between material types. Transition may be gradual.
2. N Values have not been corrected for hammer energy. C_E is the hammer energy correction factor.
3. Water level readings have been made at times and under conditions stated. Fluctuations may occur due to other factors than those present at the time measurements were made.

BORING LOG 2 ST JOHNSBURY BF 7000(20) GPJ VERMONT AOT.GDT 12/11/14

CLD 14-0116 MODEL: BOR05

CONSULTING ENGINEERS

PROJECT NAME: ST. JOHNSBURY
PROJECT NUMBER: BF 7000(20)

FILE NAME: 86e048/cos/z86e048bor.dgn
PROJECT LEADER: J. BYATT
DESIGNED BY: A. GIRALDI
BORING LOGS SHEET 4

PLOT DATE: 10/26/2016
DRAWN BY: M. SMITH
CHECKED BY: S. BEAUMONT
SHEET 31 OF 70

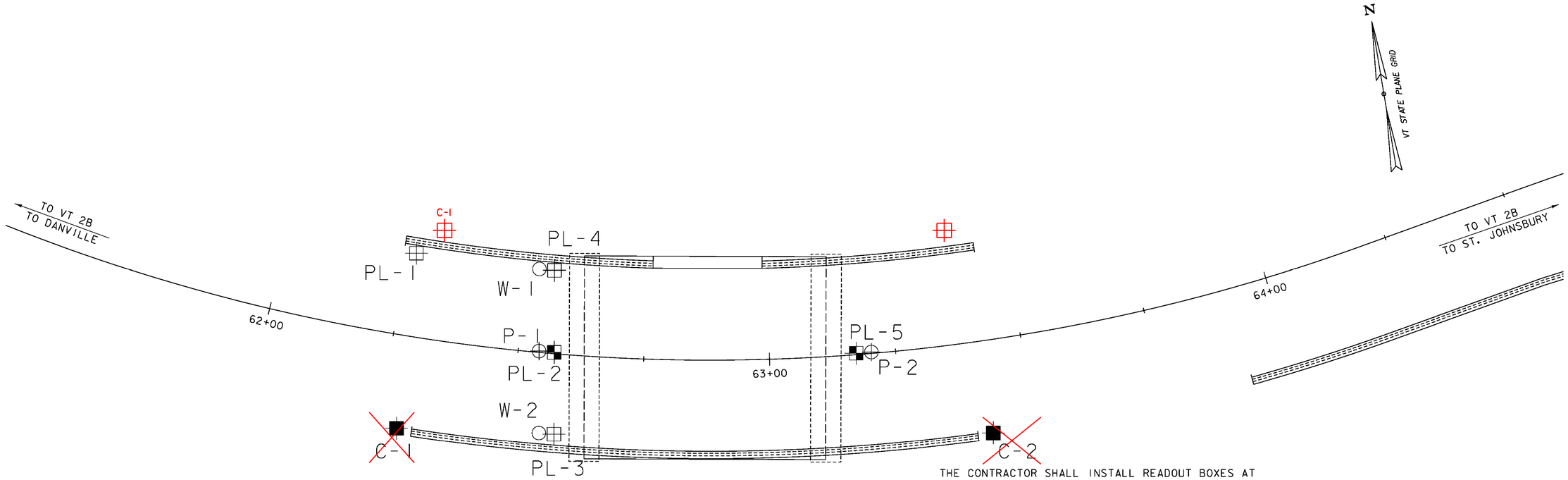

THE CONTRACTOR SHALL INSTALL SETTLEMENT PLATFORMS AT THE FOLLOWING LOCATIONS:

SETTLEMENT PLATFORM LOCATIONS

PLATFORM	STATION	OFFSET (FT)	ELEVATION (FT)	DISTANCE FROM FOOTING (FT)
PL-1	62+27.1	-16.2	670.3	30.6
PL-2	62+57.2	0.0	663.6	3.0
PL-3	62+58.4	16.2	663.6	3.0
PL-4	62+55.9	-16.2	663.6	3.0
PL-5	63+17.2	0.0	663.6	3.0

THE CONTRACTOR SHALL INSTALL OBSERVATION WELLS AT THE FOLLOWING LOCATIONS:

OBSERVATION WELL/PIEZOMETER LOCATIONS

WELL/ PIEZOMETER	STATION	OFFSET (FT)	ELEVATION (FT)	DISTANCE FROM FOOTING (FT)
W-1	62+52.7	-16.2	658.6*	6.0
W-2	62+55.5	16.2	658.6*	6.0
P-1	62+54.2	0.0	658.6	6.0
P-2	63+20.2	0.0	658.6	6.0

*ELEVATION OF THE TOP OF THE SCREENED SECTION

THE CONTRACTOR SHALL INSTALL READOUT BOXES AT THE FOLLOWING APPROXIMATE LOCATIONS. THE EXACT LOCATION OF THE READOUT BOX WILL BE DETERMINED BY THE CONTRACTOR WITH APPROVAL BY THE ENGINEER:

READOUT BOX LOCATIONS

READOUT BOX	STATION	OFFSET (FT)
C-1	62+28.6	18.7
C-2	63+41.8	18.7

⊕ -PIEZOMETER

○ -MONITORING WELL

■ -SETTLEMENT PLATFORM TYPE IV

⊞ -SETTLEMENT PLATFORM TYPE I

■ -READOUT BOX LOCATION*

*EXACT LOCATION WILL BE DETERMINED BY THE CONTRACTOR WITH APPROVAL OF THE ENGINEER.

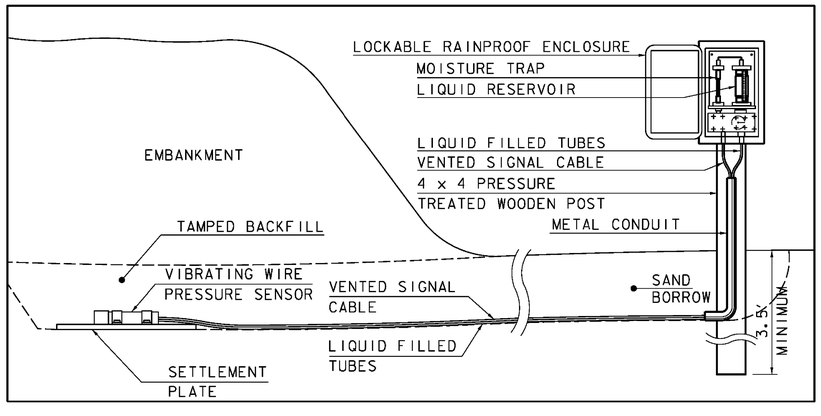

TYPICAL INSTALLATION FOR SETTLEMENT PLATFORM, TYPE IV

N.T.S.

INSTRUMENTATION LAYOUT

0 10 20

(SCALE 1" = 10')

NOTES:

1. ALL GEOTECHNICAL INSTRUMENTATION SHALL AVOID TENSILE REINFORCEMENT STRIPS.
2. THE SETTLEMENT OF THE FOUNDATION WILL BE MONITORED DURING THE BACKFILL ACTIVITIES USING TYPE I AND TYPE IV SETTLEMENT PLATFORMS AT THE LOCATIONIS SHOWN ABOVE. OBSERVATION WELLS AND THE PIEZOMETERS WILL ALSO BE INSTALLED DURING BACKFILL ACTIVITIES AT THE LOCATIONS SHOWN ABOVE. BOTH THE SPECIFIED PLATFORMS, OBSERVATION WELLS, AND THE PIEZOMETERS SHALL MEET THE GUIDELINES SPECIFIED IN STANDARD SHEETS L1 AND L2, AND SECTION 900 OF THE SPECIAL PROVISIONS. THE MONITORING INSTRUMENTATION WILL BE PAID FOR UNDER ITEM 900.620, "SPECIAL PROVISION (SETTLEMENT PLATFORM, TYPE I)", ITEM 900.620, "SPECIAL PROVISION (SETTLEMENT PLATFORM, TYPE IV)", ITEM 900.620, "SPECIAL PROVISION (PIEZOMETER, VIBRATING WIRE)" AND ITEM 900.620, "SPECIAL PROVISION (GROUND WATER OBSERVATION WELL)".

PROJECT NAME: ST. JOHNSBURY
PROJECT NUMBER: BF 7000(20)

FILE NAME: 86e048/cos/z86e048bor-inst.dgn PLOT DATE: 10/26/2016
PROJECT LEADER: J.BYATT DRAWN BY: VTRANS
DESIGNED BY: VTRANS CHECKED BY: VTRANS
INSTRUMENTATION INFORMATION SHEET SHEET 32 OF 70

MODEL: BOR01
CLD 14-0116

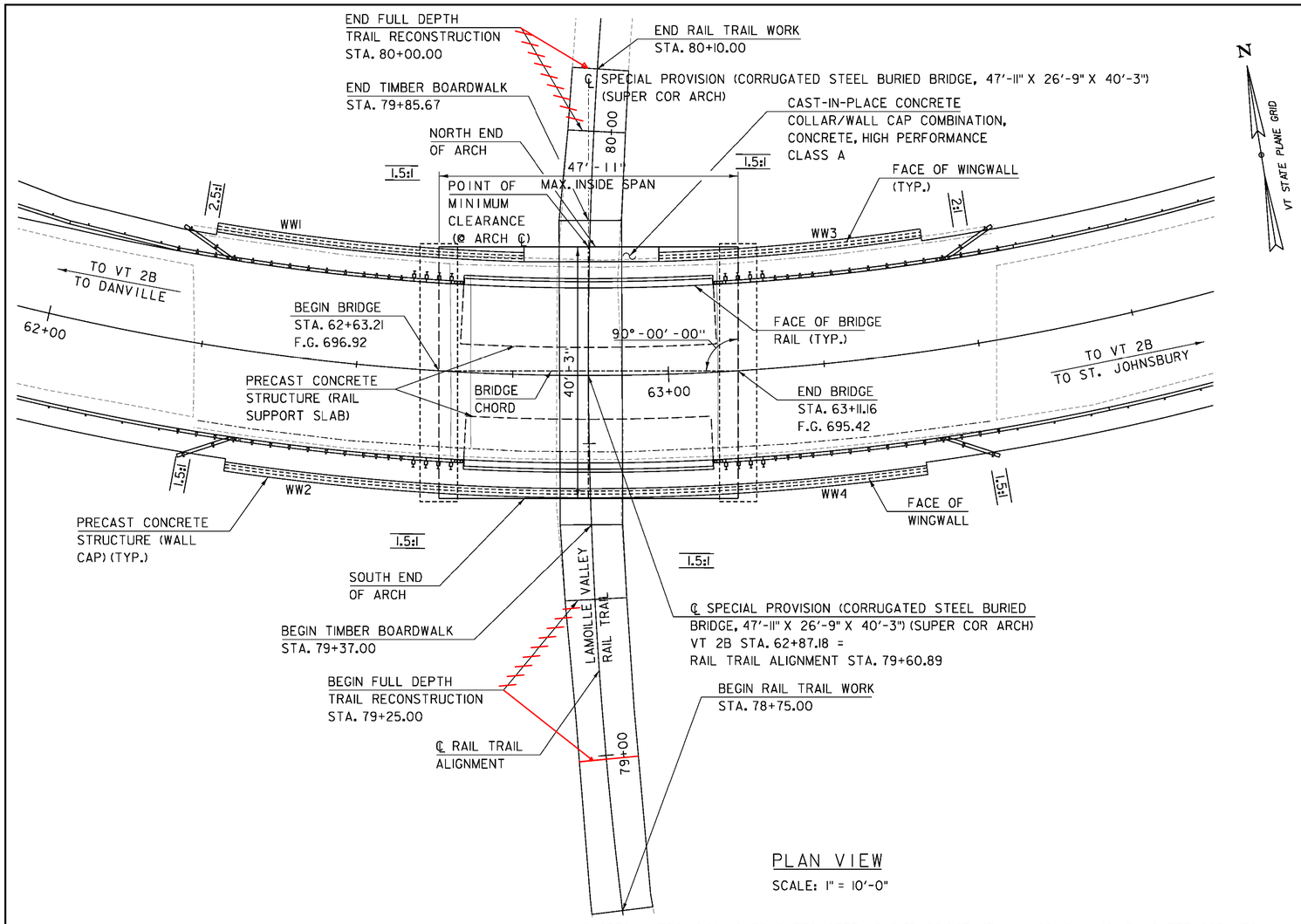

PLAN VIEW

SCALE: 1" = 10'-0"

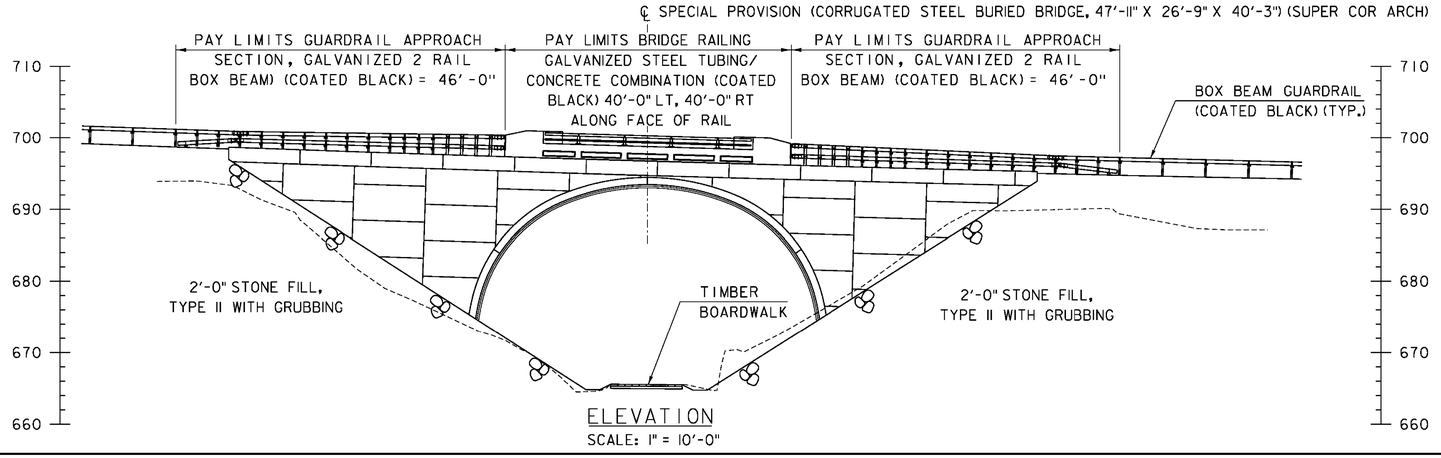

ELEVATION

SCALE: 1" = 10'-0"

0 10 20

(SCALE 1" = 10')

CONSULTING ENGINEERS

PROJECT NAME:	ST. JOHNSBURY
PROJECT NUMBER:	BF 7000(20)
FILE NAME: 86e048/cos/z86e048pe.dgn	PLOT DATE: 10/26/2016
PROJECT LEADER: J.BYATT	DRAWN BY: M.SMITH
DESIGNED BY: A.GIRALDI	CHECKED BY: S.BEAUMONT
PLAN AND ELEVATION SHEET	SHEET 33 OF 70

CLD 14-0116 MODEL: Sheet

WORKING POINTS				
	STA.	OFFSET	NORTHING	EASTING
WP1	62+87.18	20.57 LT	700866.0065	1761665.2220
WP2	62+87.18	0.00	700845.6904	1761661.9815
WP3	62+87.18	19.68 RT	700826.2589	1761658.8821
WP4	62+24.43	19.00 LT	700878.6514	1761607.1419
WP5	62+25.00	19.00 LT	700878.4790	1761607.6579
WP6	62+50.00	19.00 LT	700871.7135	1761630.4194
WP7	62+75.00	19.00 LT	700866.4591	1761653.5765
WP8	62+76.28	19.00 LT	700866.2308	1761654.7727
WP9	62+99.04	19.00 LT	700862.8530	1761676.1218
WP10	63+00.00	19.00 LT	700862.7384	1761677.0289
WP11	63+25.00	19.00 LT	700860.5676	1761700.6752
WP12	63+43.37	19.00 LT	700859.9659	1761718.1191
WP13	62+31.43	19.00 RT	700840.3471	1761602.0665
WP14	62+50.00	19.00 RT	700834.9521	1761620.7966
WP15	62+75.00	19.00 RT	700829.1446	1761646.3912
WP16	62+87.18	19.00 RT	700826.9276	1761658.9888
WP17	63+00.00	19.00 RT	700825.0322	1761672.3123
WP18	63+25.00	19.00 RT	700822.6329	1761698.4477
WP19	63+39.05	19.00 RT	700822.0405	1761713.1914
WP20	63+92.00	19.00 RT	700824.7056	1761768.6760
WP21	64+00.00	19.00 RT	700825.7795	1761777.0069
WP22	64+19.49	19.00 RT	700829.1283	1761797.1977
WP23	64+51.66	19.00 RT	700835.2039	1761828.7860
WP24	65+05.00	20.00 RT	700842.8230	1761880.5995

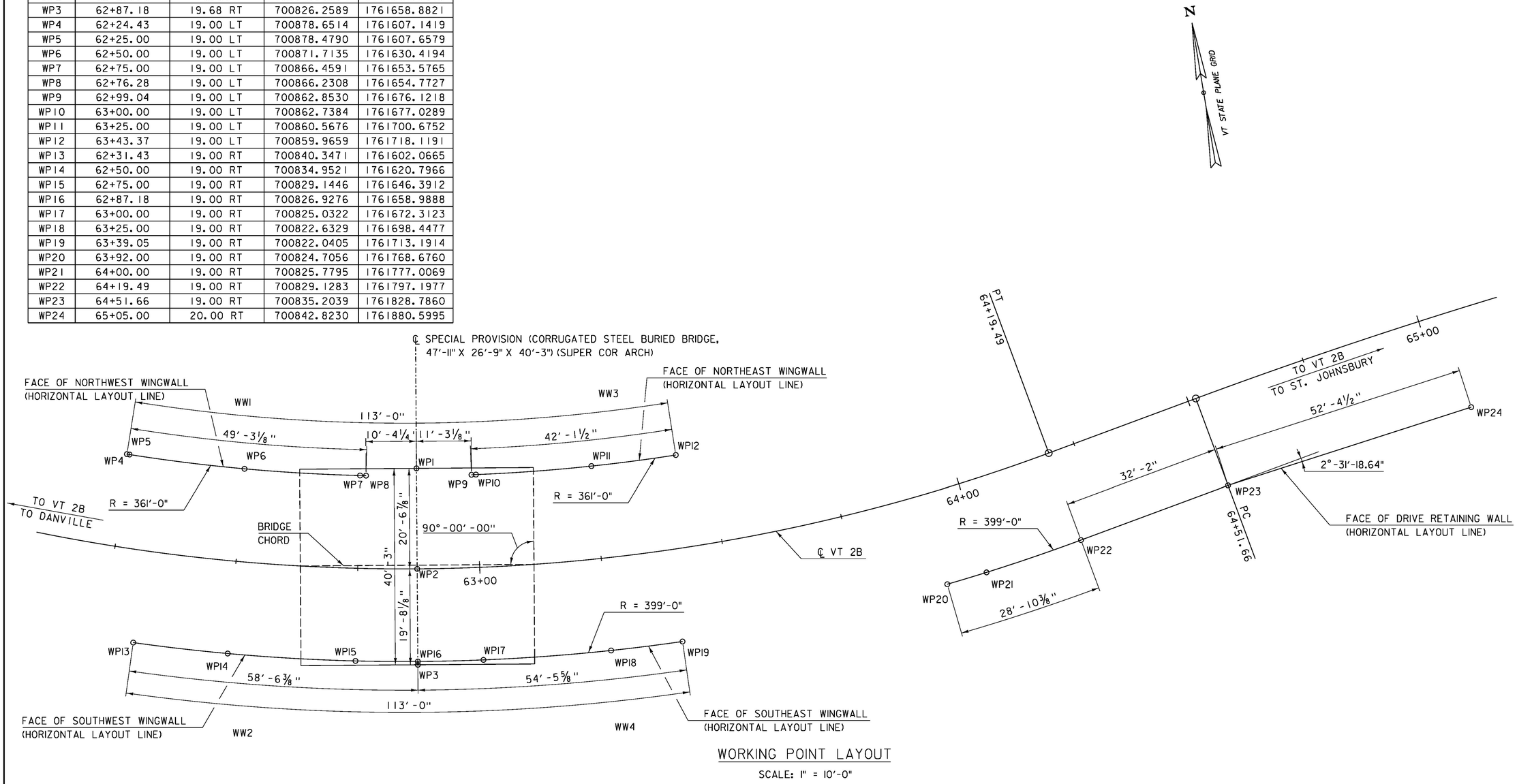

WORKING POINT LAYOUT

SCALE: 1" = 10'-0"

CLD 14-0116 MODEL: SUB05

PROJECT NAME:	ST. JOHNSBURY
PROJECT NUMBER:	BF 7000(20)
FILE NAME: 86e048/cos/z86e048sub.dgn	PLOT DATE: 10/26/2016
PROJECT LEADER: J.BYATT	DRAWN BY: M.SMITH
DESIGNED BY: S. BEAUMONT	CHECKED BY: A. GIRALDI
WORKING POINT LAYOUT SHEET	SHEET 34 OF 70

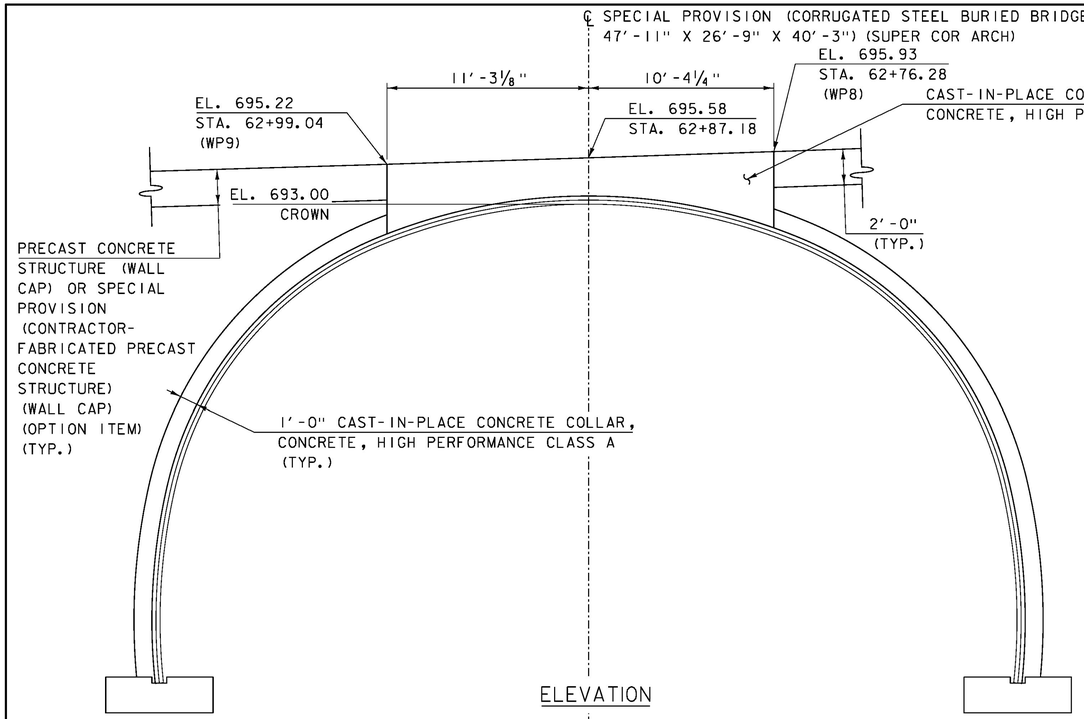

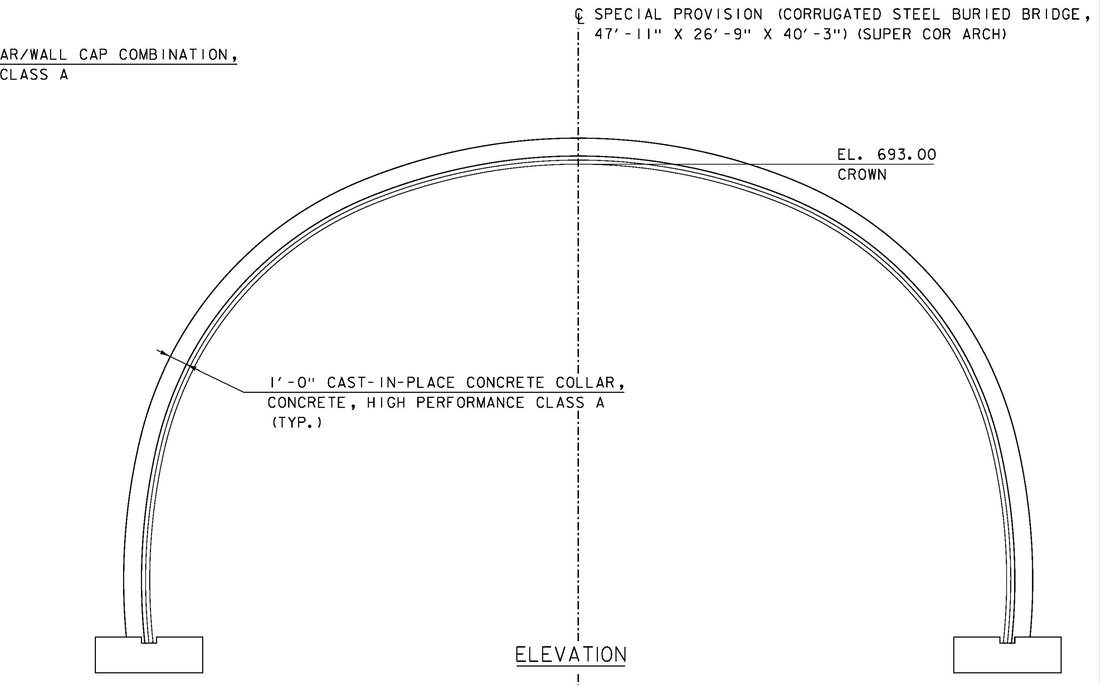

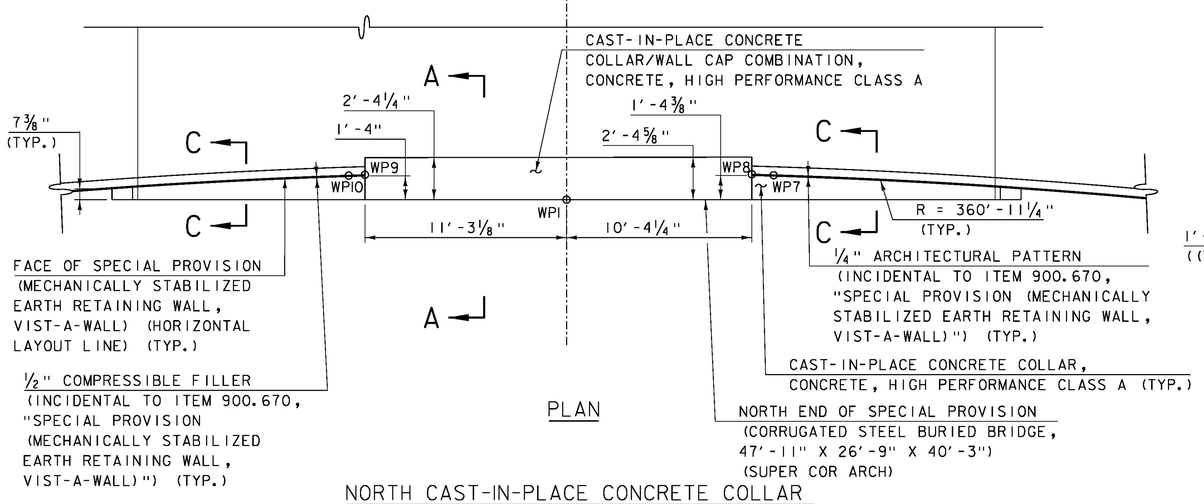

NORTH CAST-IN-PLACE CONCRETE COLLAR AND COLLAR/WALL CAP COMBINATION

SCALE: ¼" = 1'-0"

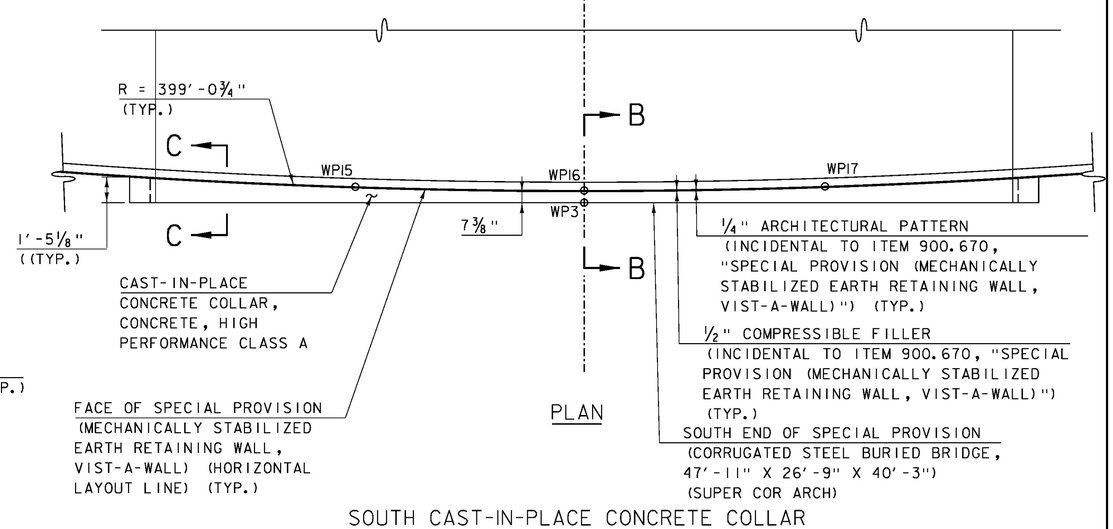

SOUTH CAST-IN-PLACE CONCRETE COLLAR

SCALE: ¼" = 1'-0"

NOTES:

1. PRECAST CONCRETE WALL CAP NOT SHOWN IN PLAN VIEWS FOR CLARITY.
2. CAST-IN-PLACE CONCRETE COLLAR AND COLLAR/WALL CAP COMBINATION SHALL BE POURED AFTER THE VIST-A-WALL PANELS ARE IN PLACE.
3. CAST-IN-PLACE CONCRETE COLLAR WILL VARY IN WIDTH AND WILL EXTEND FROM EACH END OF THE CORRUGATED STRUCTURAL STEEL PLATE ARCH TO THE NORTH/SOUTH FACE OF THE VIST-A-WALL ARCHITECTURAL PATTERN, AS APPLICABLE. ½" OF COMPRESSIBLE FILLER SHALL BE PROVIDED BETWEEN THE ARCHITECTURAL PATTERN AND THE CAST-IN-PLACE CONCRETE COLLAR.
4. THE TOP OF CAST-IN-PLACE CONCRETE COLLAR/CAP COMBINATION SHALL MATCH INTO THE TOP OF PRECAST CONCRETE WALL CAP AT WP8 AND WP9.
5. SEE SHEET 36 FOR SECTIONS A-A, B-B, AND C-C AND SHEET 36 FOR REINFORCING DETAILS.

MODEL: SUB06

CLD 14-016

CONSULTING ENGINEERS

PROJECT NAME: ST. JOHNSBURY	
PROJECT NUMBER: BF 7000(20)	
FILE NAME: 86e048/cos/z86e048sub.dgn	PLOT DATE: 10/26/2016
PROJECT LEADER: J.BYATT	DRAWN BY: M.SMITH
DESIGNED BY: S.BEAUMONT	CHECKED BY: A. GIRALDI
STRUCTURE DETAILS SHEET 1	SHEET 35 OF 70

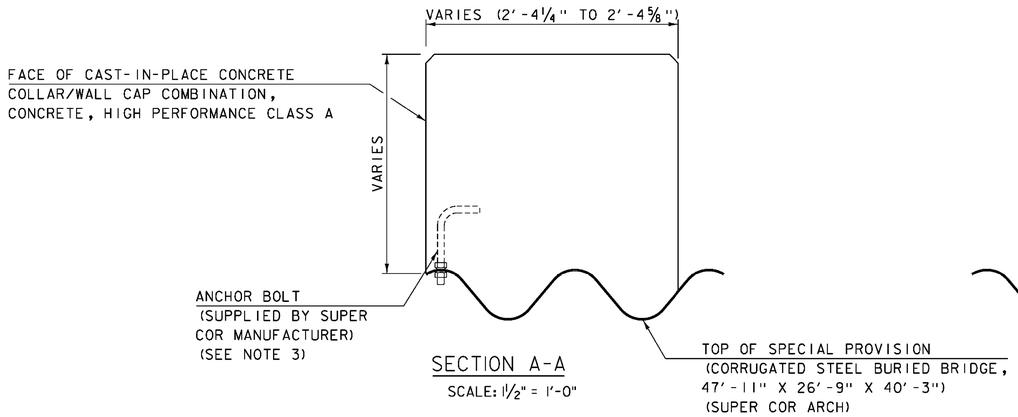

SECTION A-A

SCALE: 1½" = 1'-0"

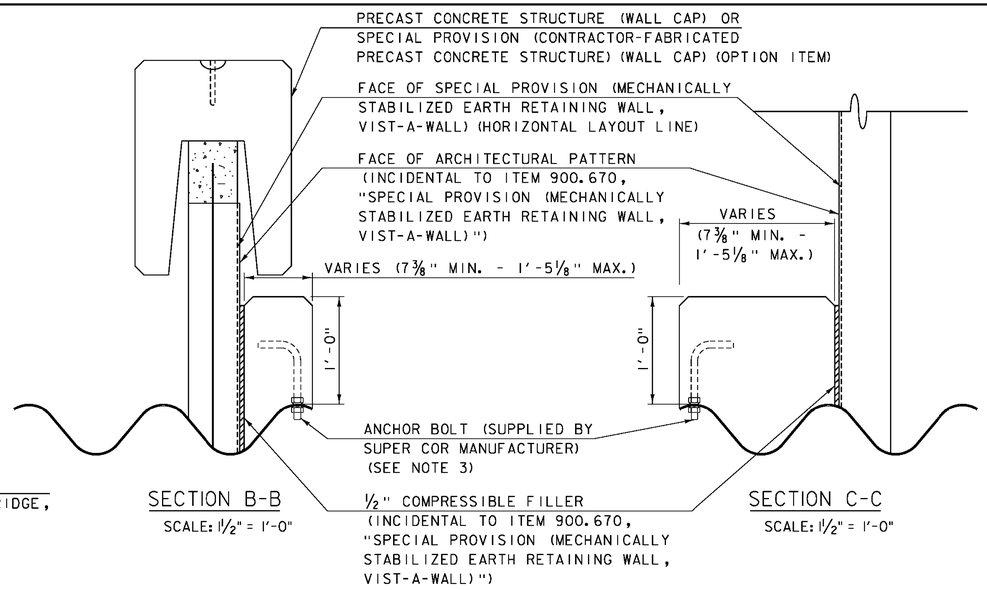

SECTION B-B

SCALE: 1½" = 1'-0"

SECTION C-C

SCALE: 1½" = 1'-0"

NOTES:

1. SEE SHEET 35 FOR CAST-IN-PLACE CONCRETE COLLAR AND COLLAR/WALL CAP COMBINATION ELEVATION AND PLAN.
2. SEE SHEET 36 FOR CAST-IN-PLACE CONCRETE COLLAR AND COLLAR/WALL CAP COMBINATION REINFORCING LAYOUT.
3. SUPER COR MANUFACTURER TO PROVIDE CAST-IN-PLACE CONCRETE COLLAR AND COLLAR/WALL CAP COMBINATION CONNECTION HARDWARE INFORMATION.

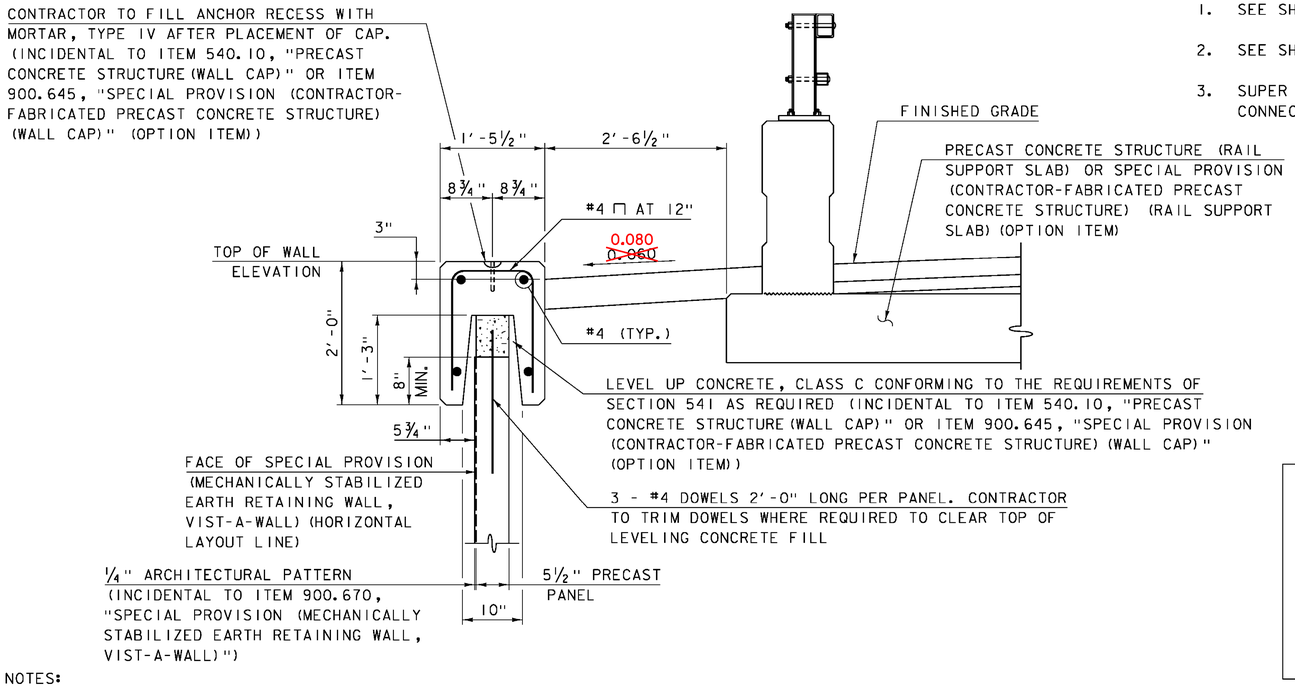

NOTES:

1. 2" CLEAR UNLESS OTHERWISE SPECIFIED ON THE THE PLANS.
2. 2'-1" BAR LAP UNLESS OTHERWISE SPECIFIED ON THE PLANS.

TYPICAL PRECAST CONCRETE WALL CAP SECTION

SCALE: 1" = 1'-0"

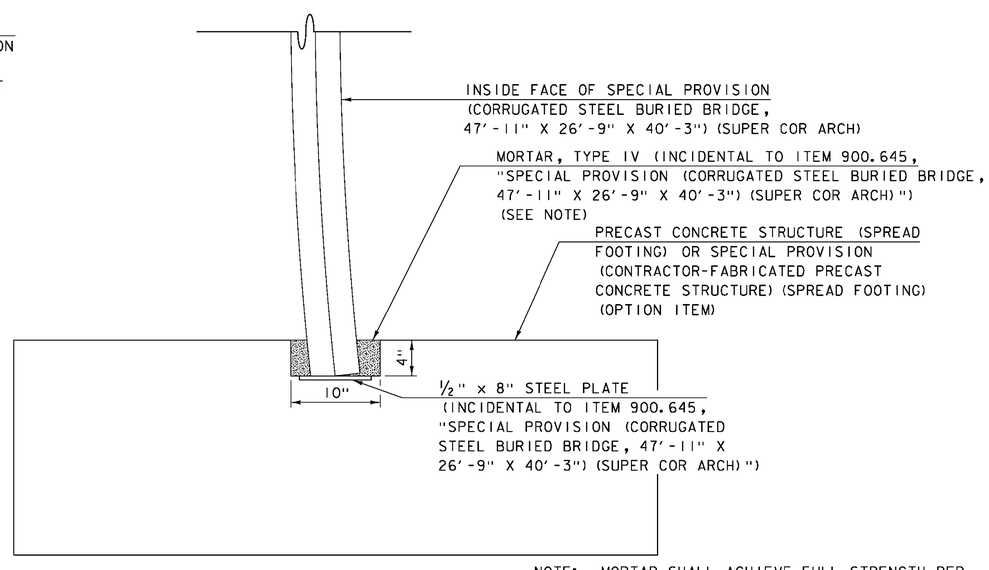

FOOTING CONNECTION DETAIL

SCALE: 1½" = 1'-0"

NOTE: MORTAR SHALL ACHIEVE FULL STRENGTH PER SECTION 707.03 PRIOR TO BACKFILLING.

PROJECT NAME: ST. JOHNSBURY
PROJECT NUMBER: BF 7000(20)

FILE NAME: 86e048/cos/z86e048sub.dgn
PROJECT LEADER: J.BYATT
DESIGNED BY: A. GIRALDI
STRUCTURE DETAILS SHEET 2

PLOT DATE: 10/26/2016
DRAWN BY: M.SMITH
CHECKED BY: S.BEAUMONT
SHEET 36 OF 70

CONSULTING ENGINEERS

MODEL: SUB07
CLD 14-0116

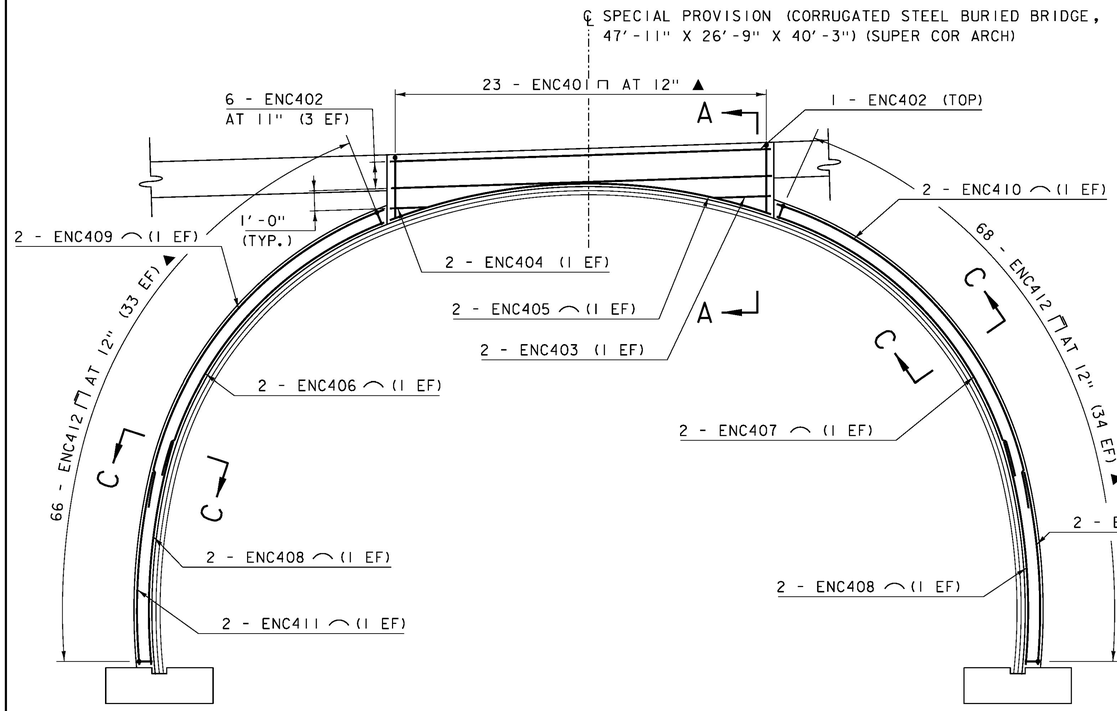

NORTH CAST-IN-PLACE CONCRETE COLLAR
AND COLLAR/WALL CAP COMBINATION REINFORCING ELEVATION

SCALE: 1/4" = 1'-0"

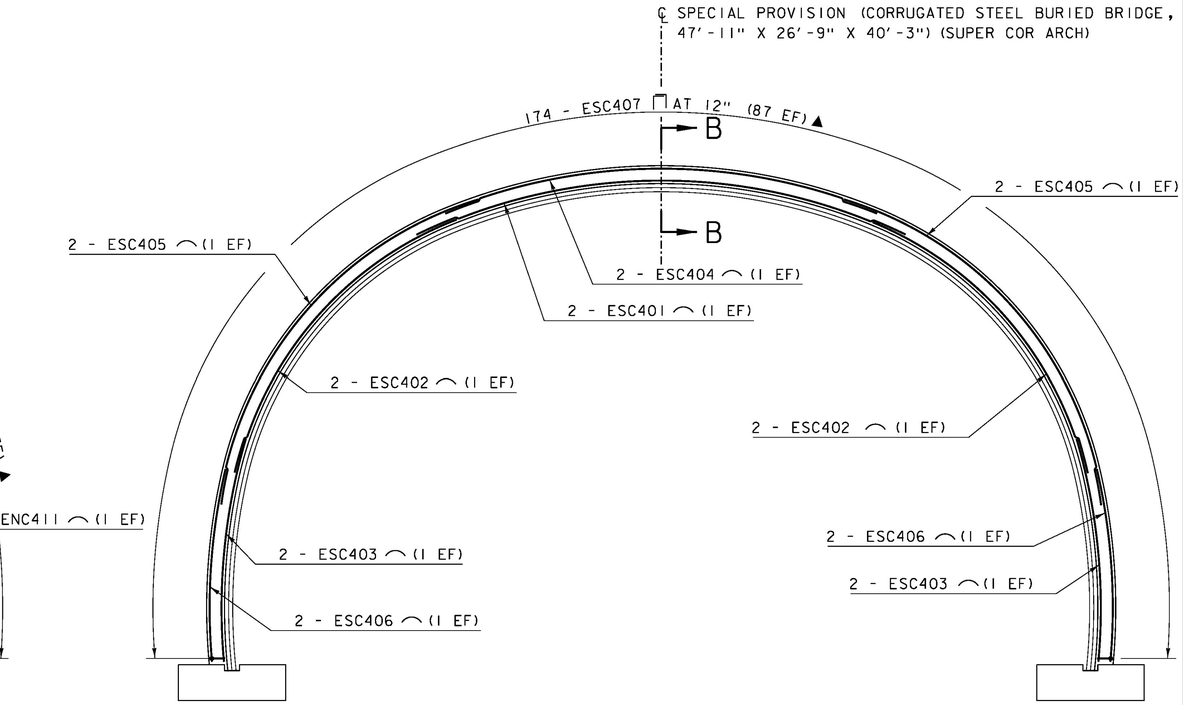

SOUTH CAST-IN-PLACE CONCRETE COLLAR REINFORCING ELEVATION

SCALE: 1/4" = 1'-0"

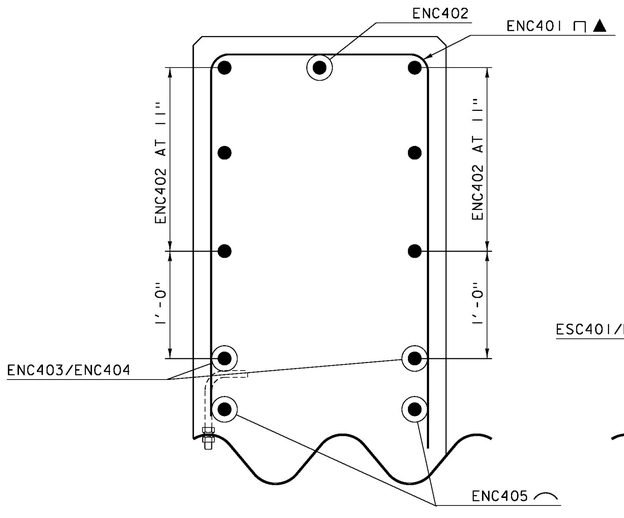

SECTION A-A

SCALE: 1 1/2" = 1'-0"

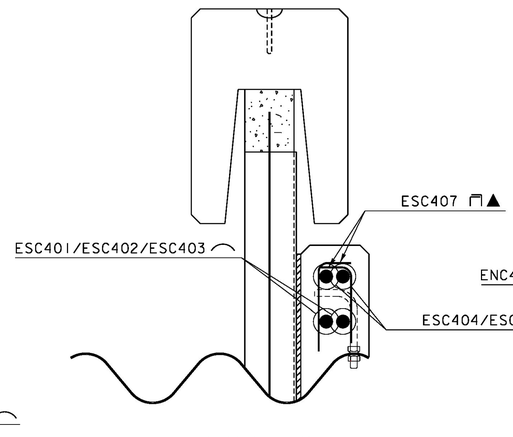

SECTION B-B

SCALE: 1 1/2" = 1'-0"

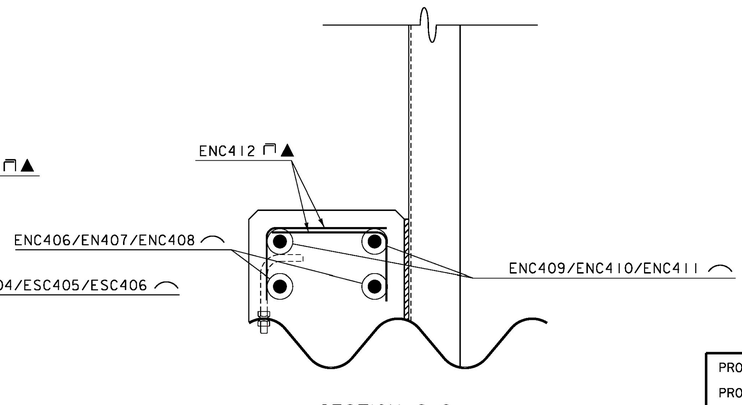

SECTION C-C

SCALE: 1 1/2" = 1'-0"

NOTES:
NF = NEAR FACE
FF = FAR FACE
EF = EACH FACE
2" CLEAR, UNLESS OTHERWISE SPECIFIED ON THE THE PLANS.
1'-11" BAR LAP UNLESS OTHERWISE SPECIFIED ON THE PLANS

PROJECT NAME:	ST. JOHNSBURY
PROJECT NUMBER:	BF 7000(20)
FILE NAME: 86e048/cos/z86e048sub.dgn	PLOT DATE: 10/26/2016
PROJECT LEADER: J.BYATT	DRAWN BY: M.SMITH
DESIGNED BY: S. BEAUMONT	CHECKED BY: A. GIRALDI
STRUCTURE DETAILS SHEET 3	SHEET 37 OF 70

CONSULTING ENGINEERS

CLD 14-0116 MODEL: SUB08

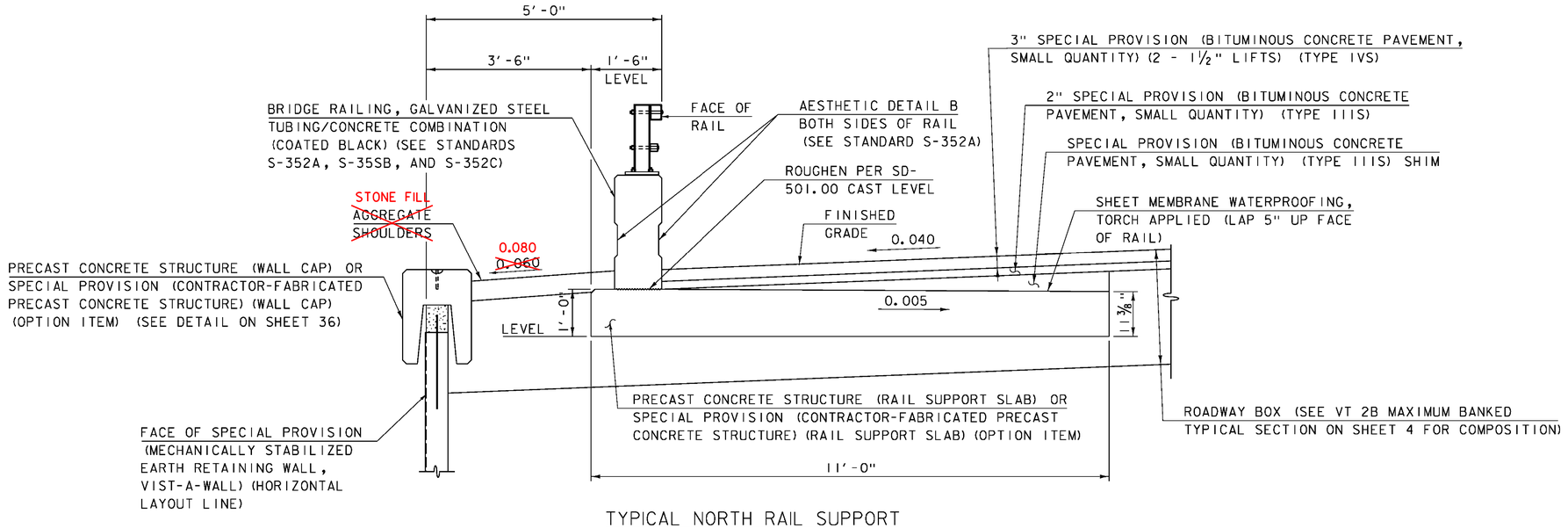

TYPICAL NORTH RAIL SUPPORT SLAB MASONRY SECTION

SCALE: ¾" = 1'-0"

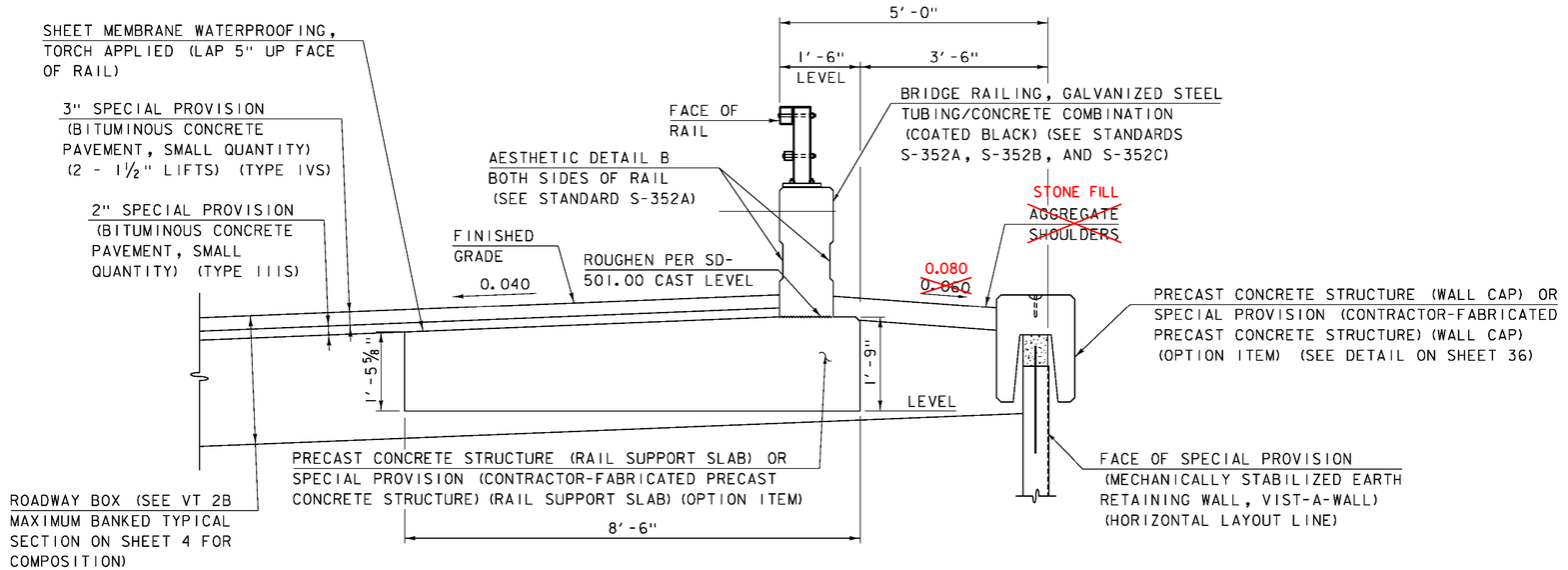

TYPICAL SOUTH RAIL SUPPORT SLAB MASONRY SECTION

SCALE: ¾" = 1'-0"

MODEL: SUB09

CLD 14-0116

PROJECT NAME:	ST. JOHNSBURY
PROJECT NUMBER:	BF 7000(20)
FILE NAME: 86e048/cos/z86e048sub.dgn	PLOT DATE: 10/26/2016
PROJECT LEADER: J.BYATT	DRAWN BY: M.SMITH
DESIGNED BY: A. GIRALDI	CHECKED BY: S.BEAUMONT
RAIL SUPPORT SLAB DETAILS SHEET 1	SHEET 38 OF 70

CONSULTING ENGINEERS

RAIL SUPPORT SLAB DIMENSIONS

W AT NF OF SLAB	6.41
W AT FF OF SLAB	6.22
W AT FACE OF RAIL	6.25
W1 AT NF OF SLAB	8.66
W1 AT FF OF SLAB	8.40
W1 AT FACE OF RAIL	8.44
W2 AT NF OF SLAB	7.53
W2 AT FF OF SLAB	7.31
W2 AT FACE OF RAIL	7.34
X AT NF OF SLAB	2.24
X AT FF OF SLAB	2.18
X AT FACE OF RAIL	2.19
X1 AT NF OF SLAB	2.37
X1 AT FF OF SLAB	2.30
X1 AT FACE OF RAIL	2.31
Y AT NF OF SLAB	3.21
Y AT FF OF SLAB	3.11
Y AT FACE OF RAIL	3.13
Y1 AT NF OF SLAB	4.33
Y1 AT FF OF SLAB	4.20
Y1 AT FACE OF RAIL	4.22

RAIL SUPPORT SLAB ELEVATIONS

	STATION	OFFSET	TOP OF SLAB ELEVATION	BOTTOM OF SLAB ELEVATION
A	62+66.42	15.50 LT	695.84	694.84
B	62+66.42	4.50 LT	695.79	694.84
C	62+72.91	15.50 LT	695.62	694.62
D	62+72.91	4.50 LT	695.57	694.62
E	62+75.18	15.50 LT	695.54	694.54
F	62+75.18	4.50 LT	695.50	694.54
G	62+81.67	15.50 LT	695.33	694.33
H	62+81.67	4.50 LT	695.29	694.33
I	62+83.94	15.50 LT	695.26	694.26
J	62+83.94	4.50 LT	695.21	694.26
K	62+90.43	15.50 LT	695.06	694.06
L	62+90.43	4.50 LT	695.01	694.06
M	62+92.70	15.50 LT	694.99	693.99
N	62+92.70	4.50 LT	694.94	693.99
O	62+99.19	15.50 LT	694.79	693.79
P	62+99.19	4.50 LT	694.74	693.79
Q	63+01.46	15.50 LT	694.72	693.72
R	63+01.46	4.50 LT	694.68	693.72
S	63+07.95	15.50 LT	694.54	693.54
T	63+07.95	4.50 LT	694.49	693.54

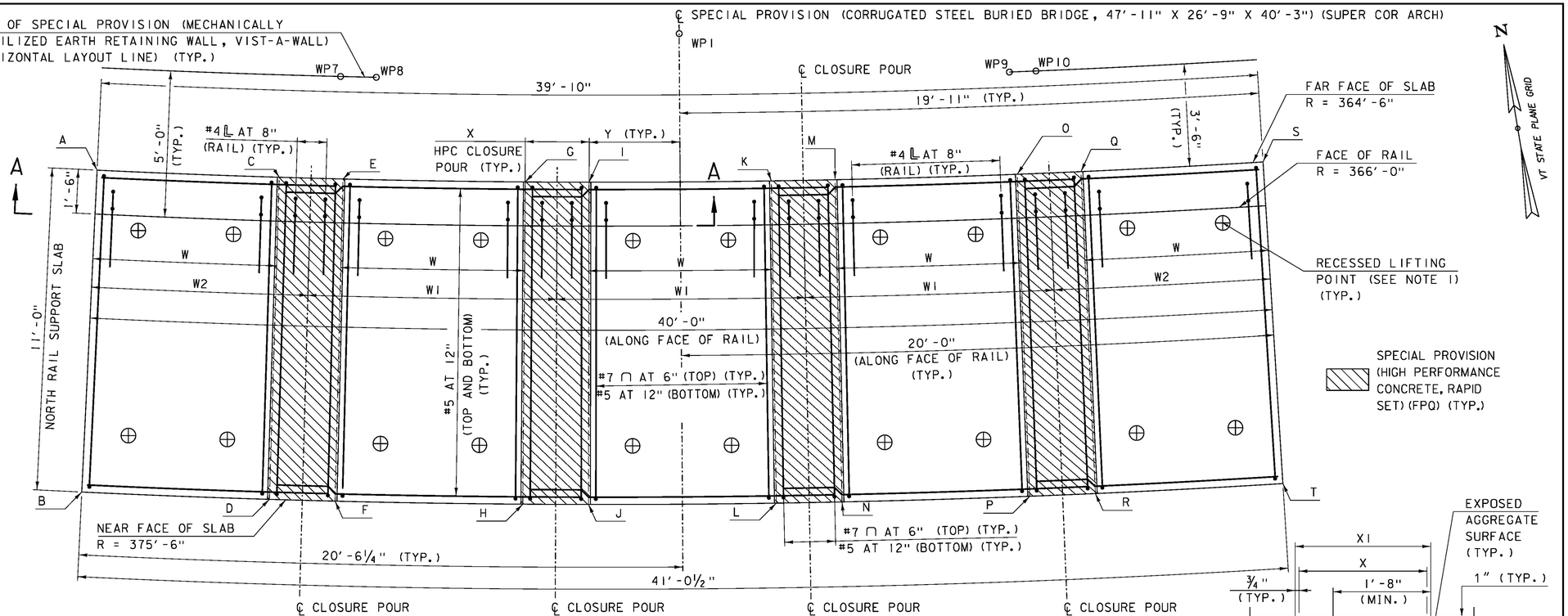

NORTH RAIL SUPPORT SLAB PLAN

SCALE: ½" = 1'-0"

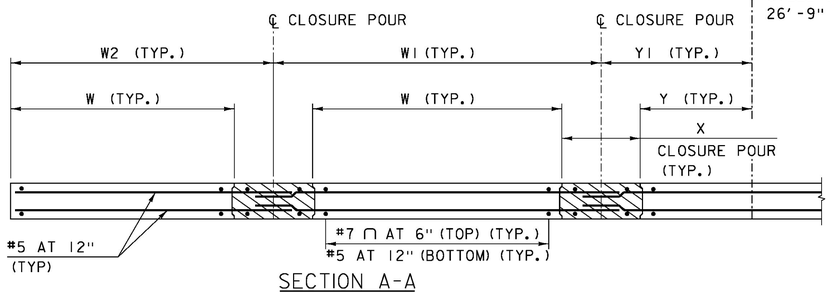

SECTION A-A

SCALE: ½" = 1'-0"

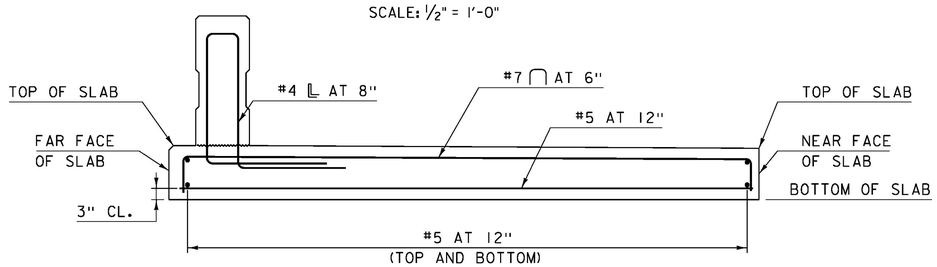

TYPICAL NORTH RAIL SUPPORT SLAB REINFORCING SECTION

SCALE: ¾" = 1'-0"

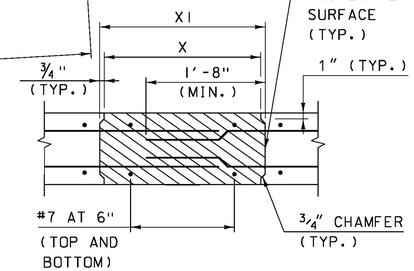

JOINT DETAIL SECTION

SCALE: 1" = 1'-0"

NOTES:

1. FABRICATOR TO DESIGN CONCRETE RAIL SUPPORT SLABS AND LIFTING POINTS AND LOCATIONS FOR ERECTION STRESSES AND INCLUDE CALCULATIONS WITH SUBMITTAL. SEE NOTE 37 ON SHEET 10.
2. 2" CLEAR UNLESS OTHERWISE NOTED ON THE PLANS.
3. 2'-1" BAR LAP UNLESS OTHERWISE SPECIFIED ON THE PLANS.
4. ALL DIMENSIONS IN RAIL SUPPORT SLAB DIMENSIONS TABLE ARE MEASURED ALONG THE CURVE AT THE LOCATION INDICATED.
5. SEE SHEET 38 FOR NORTH RAIL SUPPORT SLAB TYPICAL MASONRY SECTION.
6. THE CONTRACTOR MAY PROPOSE ALTERNATE PRECAST CONCRETE RAIL SUPPORT SLAB GEOMETRY PROVIDED POINTS "A", "B", "S", AND "T" REMAIN THE SAME. THE CONTRACTOR SHALL SUBMIT THE REVISED GEOMETRY AND DESIGN (IF APPLICABLE) FOR APPROVAL, WHICH SHALL BE STAMPED BY A PROFESSIONAL ENGINEER LICENSED IN THE STATE OF VERMONT.

PROJECT NAME: ST. JOHNSBURY
PROJECT NUMBER: BF 7000(20)

FILE NAME: 86e048/cos/z86e048sub.dgn
PROJECT LEADER: J.BYATT
DESIGNED BY: A. GIRALDI
RAIL SUPPORT SLAB DETAILS SHEET 2

PLOT DATE: 10/26/2016
DRAWN BY: M.SMITH
CHECKED BY: S.BEAUMONT
SHEET 39 OF 70

CLD 14-0116 MODEL: SUBIO

RAIL SUPPORT SLAB DIMENSIONS

W AT NF OF SLAB	6.14
W AT FF OF SLAB	6.27
W AT FACE OF RAIL	6.25
W1 AT NF OF SLAB	8.29
W1 AT FF OF SLAB	8.47
W1 AT FACE OF RAIL	8.44
W2 AT NF OF SLAB	7.21
W2 AT FF OF SLAB	7.37
W2 AT FACE OF RAIL	7.34
X AT NF OF SLAB	2.15
X AT FF OF SLAB	2.20
X AT FACE OF RAIL	2.19
X1 AT NF OF SLAB	2.27
X1 AT FF OF SLAB	2.32
X1 AT FACE OF RAIL	2.31
Y AT NF OF SLAB	3.07
Y AT FF OF SLAB	3.14
Y AT FACE OF RAIL	3.13
Y1 AT NF OF SLAB	4.14
Y1 AT FF OF SLAB	4.23
Y1 AT FACE OF RAIL	4.22

RAIL SUPPORT SLAB ELEVATIONS

	STATION	OFFSET	TOP OF SLAB ELEVATION	BOTTOM OF SLAB ELEVATION
A	62+67.89	15.50	696.91	695.16
B	62+67.89	7.00	696.63	695.16
C	62+73.92	15.50	696.71	694.96
D	62+73.92	7.00	696.43	694.96
E	62+76.03	15.50	696.64	694.89
F	62+76.03	7.00	696.36	694.89
G	62+82.06	15.50	696.44	694.69
H	62+82.06	7.00	696.16	694.69
I	62+84.17	15.50	696.37	694.62
J	62+84.17	7.00	696.09	694.62
K	62+90.20	15.50	696.18	694.43
L	62+90.20	7.00	695.90	694.43
M	62+92.31	15.50	696.12	694.37
N	62+92.31	7.00	695.84	694.37
O	62+98.33	15.50	695.94	694.19
P	62+98.33	7.00	695.66	694.19
Q	63+00.44	15.50	695.87	694.12
R	63+00.44	7.00	695.59	694.12
S	63+06.47	15.50	695.70	693.95
T	63+06.47	7.00	695.42	693.95

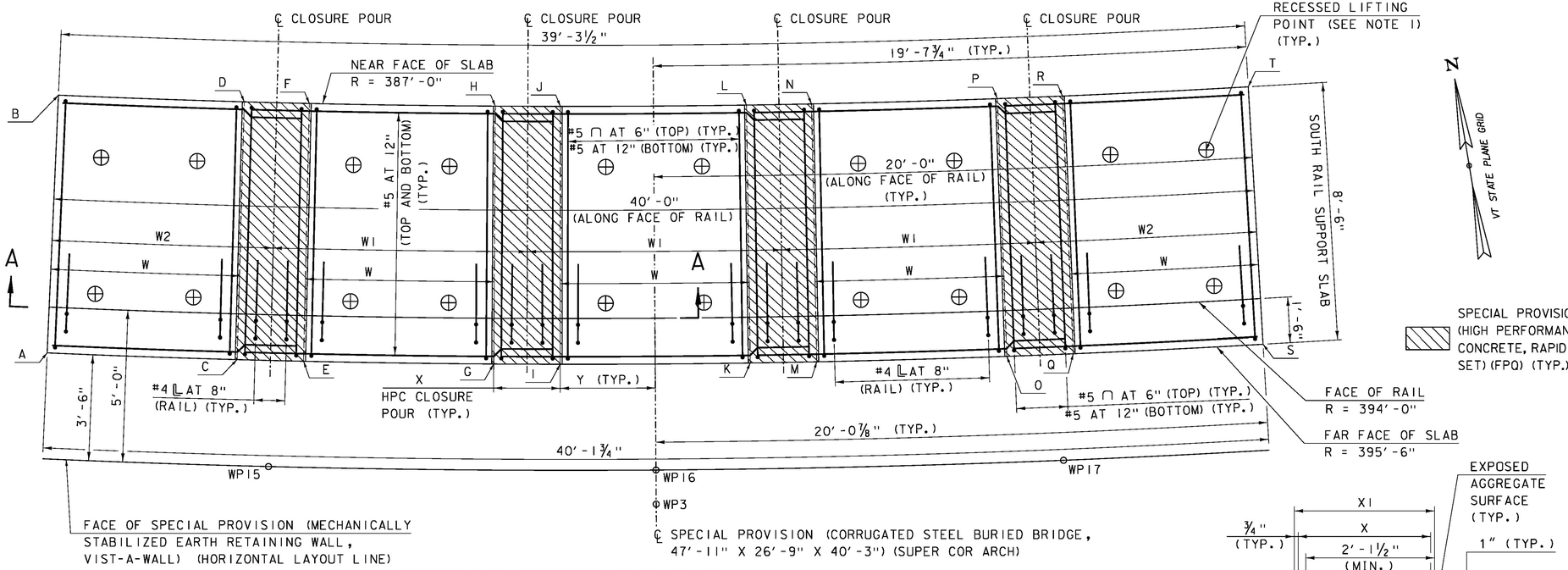

SOUTH RAIL SUPPORT SLAB PLAN

SCALE: ½" = 1'-0"

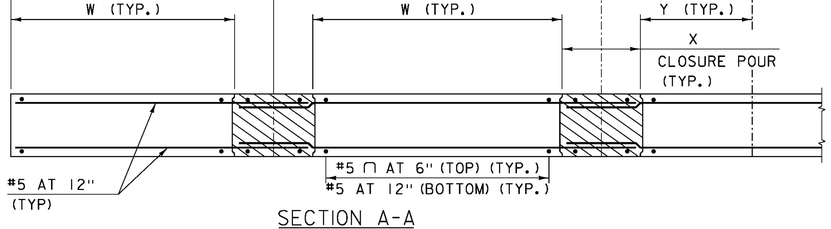

SECTION A-A

SCALE: ½" = 1'-0"

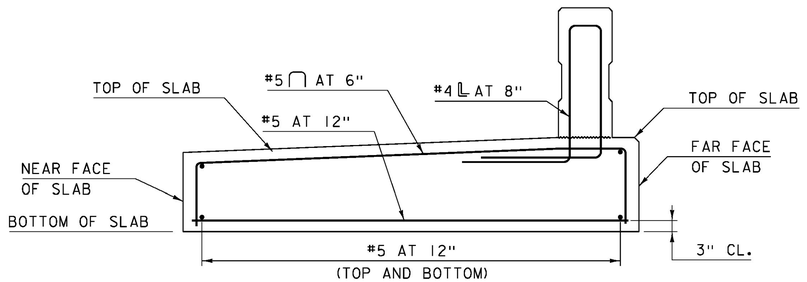

TYPICAL SOUTH RAIL SUPPORT SLAB REINFORCING SECTION

SCALE: ¾" = 1'-0"

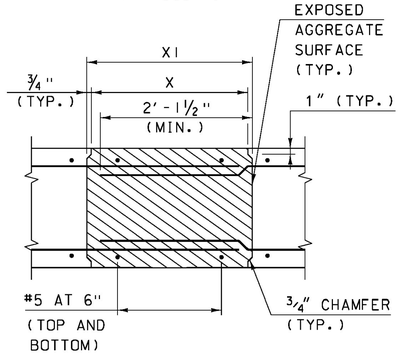

JOINT DETAIL SECTION

SCALE: 1" = 1'-0"

NOTES:

1. FABRICATOR TO DESIGN CONCRETE RAIL SUPPORT SLABS AND LIFTING POINTS AND LOCATIONS FOR ERECTION STRESSES AND INCLUDE CALCULATIONS WITH SUBMITTAL. SEE NOTE 37 ON SHEET 10.
2. 2" CLEAR UNLESS OTHERWISE NOTED ON THE PLANS.
3. 2'-9" BAR LAP UNLESS OTHERWISE SPECIFIED ON THE PLANS.
4. ALL DIMENSIONS IN RAIL SUPPORT SLAB DIMENSIONS TABLE ARE MEASURED ALONG THE CURVE AT THE LOCATION INDICATED.
5. SEE SHEET 38 FOR SOUTH RAIL SUPPORT SLAB TYPICAL MASONRY SECTION.
6. THE CONTRACTOR MAY PROPOSE ALTERNATE PRECAST CONCRETE RAIL SUPPORT SLAB GEOMETRY PROVIDED POINTS "A", "B", "S", AND "T" REMAIN THE SAME. THE CONTRACTOR SHALL SUBMIT THE REVISED GEOMETRY AND DESIGN (IF APPLICABLE) FOR APPROVAL, WHICH SHALL BE STAMPED BY A PROFESSIONAL ENGINEER LICENSED IN THE STATE OF VERMONT.

PROJECT NAME: ST. JOHNSBURY
PROJECT NUMBER: BF 7000(20)

FILE NAME: 86e048/cos/z86e048sub.dgn
PROJECT LEADER: J.BYATT
DESIGNED BY: A. GIRALDI
RAIL SUPPORT SLAB DETAILS SHEET 3
PLOT DATE: 10/26/2016
DRAWN BY: M.SMITH
CHECKED BY: S.BEAUMONT
SHEET 40 OF 70

CLD 14-0116 MODEL: SUBII

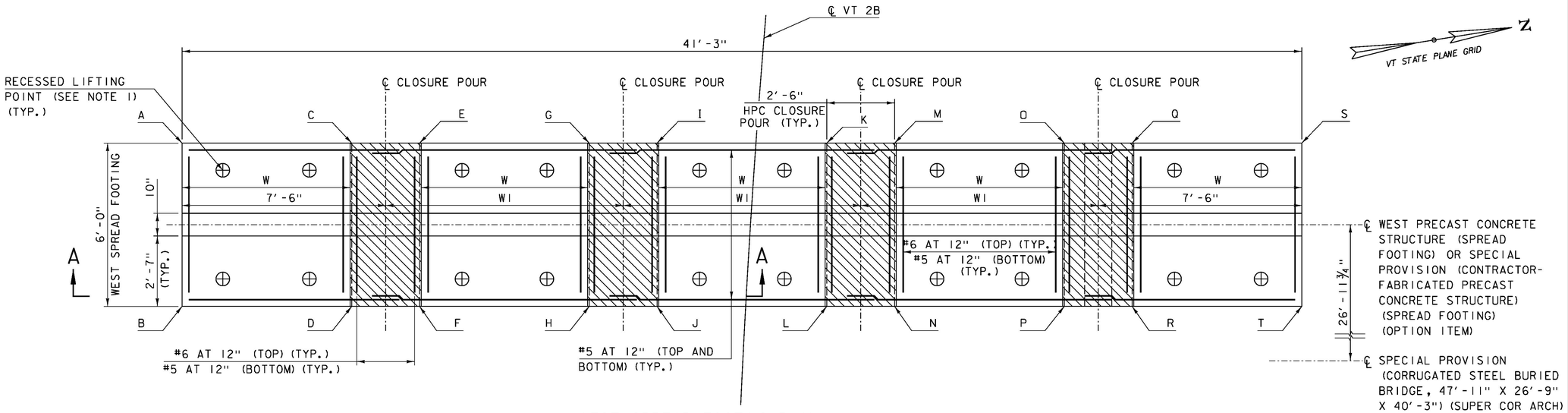

WEST SPREAD FOOTING PLAN

SCALE: ½" = 1′-0"

SPECIAL PROVISION (HIGH PERFORMANCE CONCRETE, RAPID SET) (FPQ) (TYP.)

SPREAD FOOTING DIMENSIONS

W	6.25
W1	8.75

SPREAD FOOTING ELEVATIONS

	STATION	OFFSET	TOP OF FOOTING ELEVATION	BOTTOM OF FOOTING ELEVATION
A	62+61.60	21.09	666.58	664.58
B	62+67.28	20.73	666.58	664.58
C	62+61.20	14.85	666.58	664.58
D	62+66.96	14.49	666.58	664.58
E	62+61.03	12.36	666.58	664.58
F	62+66.84	11.99	666.58	664.58
G	62+60.61	6.12	666.58	664.58
H	62+66.51	5.75	666.58	664.58
I	62+60.44	3.63	666.58	664.58
J	62+66.37	3.25	666.58	664.58
K	62+59.99	-2.61	666.58	664.58
L	62+66.03	-2.99	666.58	664.58
M	62+59.81	-5.10	666.58	664.58
N	62+65.89	-5.48	666.58	664.58
O	62+59.35	-11.33	666.58	664.58
P	62+65.52	-11.72	666.58	664.58
Q	62+59.16	-13.83	666.58	664.58
R	62+65.38	-14.22	666.58	664.58
S	62+58.67	-20.06	666.58	664.58
T	62+65.00	-20.46	666.58	664.58

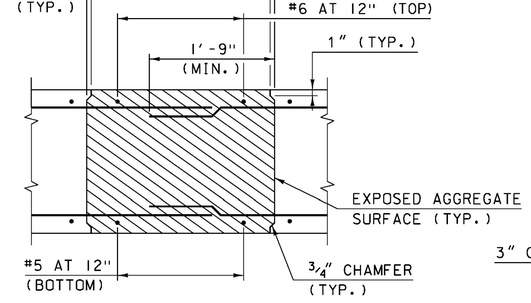

JOINT DETAIL SECTION

SCALE: 1" = 1′-0"

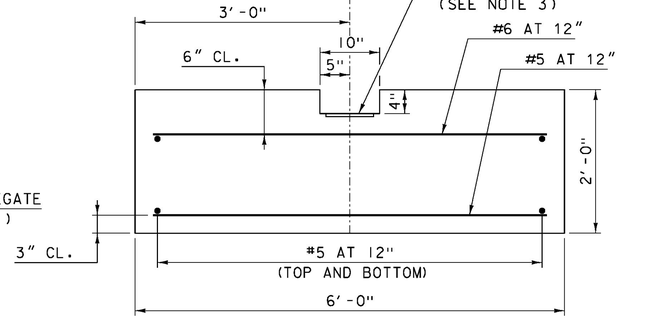

FOOTING TYPICAL MASONRY AND REINFORCING SECTION

SCALE: 1" = 1′-0"

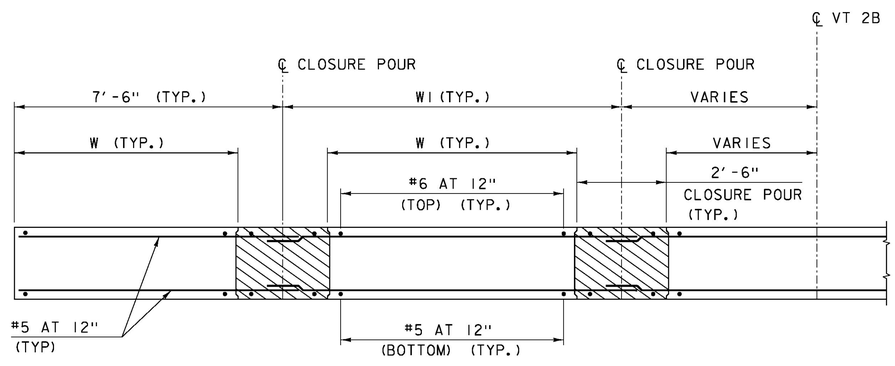

SECTION A-A

SCALE: ½" = 1′-0"

NOTES:

1. FABRICATOR TO DESIGN CONCRETE SPREAD FOOTING AND LIFTING POINTS AND LOCATIONS FOR ERECTION STRESSES AND INCLUDE CALCULATIONS WITH SUBMITTAL. SEE NOTE 37 ON SHEET 10.
2. 2" CLEAR UNLESS OTHERWISE NOTED ON THE PLANS.
3. SEE SHEET 36 FOR FOOTING CONNECTION DETAIL.

CONSULTING ENGINEERS

PROJECT NAME:	ST. JOHNSBURY
PROJECT NUMBER:	BF 7000(20)
FILE NAME: 86e048/cos/z86e048sub.dgn	PLOT DATE: 10/26/2016
PROJECT LEADER: J.BYATT	DRAWN BY: M.SMITH
DESIGNED BY: A. GIRALDI	CHECKED BY: S.BEAUMONT
SPREAD FOOTINGS DETAILS SHEET 1	SHEET 41 OF 70

CLD 14-0116 MODEL: SUBI2

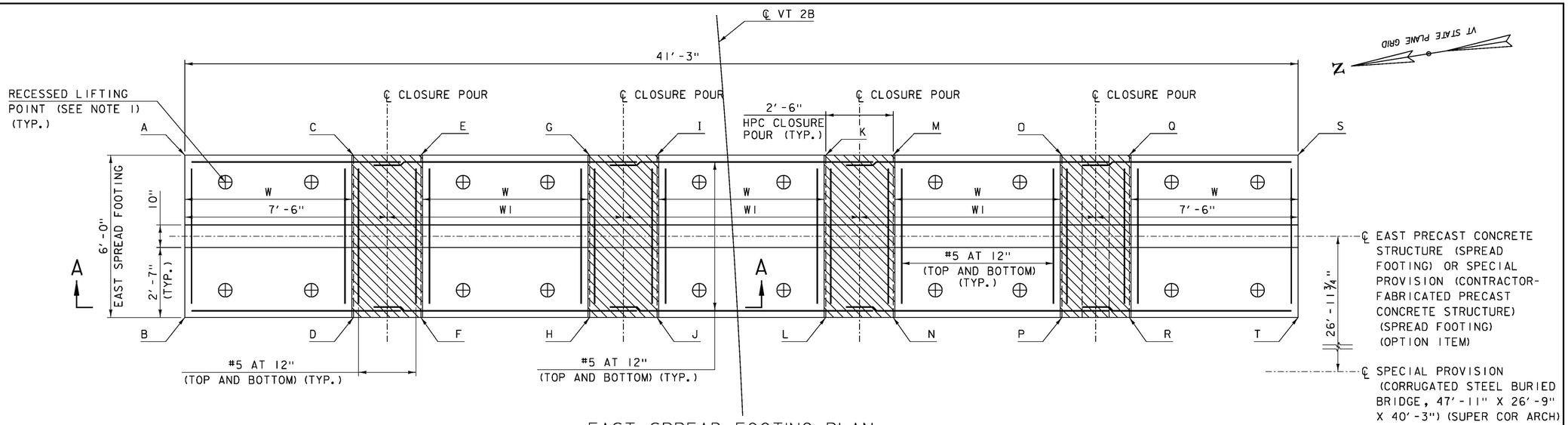

EAST SPREAD FOOTING PLAN

SCALE: ½" = 1′-0"

SPECIAL PROVISION (HIGH PERFORMANCE CONCRETE, RAPID SET) (FPQ) (TYP.)

SPREAD FOOTING DIMENSIONS

W	6.25
W1	8.75

SPREAD FOOTING ELEVATIONS

	STATION	OFFSET	TOP OF FOOTING ELEVATION	BOTTOM OF FOOTING ELEVATION
A	63+15.69	-20.06	666.58	664.58
B	63+09.37	-20.46	666.58	664.58
C	63+15.21	-13.83	666.58	664.58
D	63+08.99	-14.22	666.58	664.58
E	63+15.02	-11.33	666.58	664.58
F	63+08.84	-11.72	666.58	664.58
G	63+14.55	-5.10	666.58	664.58
H	63+08.48	-5.48	666.58	664.58
I	63+14.37	-2.61	666.58	664.58
J	63+08.34	-2.99	666.58	664.58
K	63+13.93	3.63	666.58	664.58
L	63+07.99	3.25	666.58	664.58
M	63+13.76	6.12	666.58	664.58
N	63+07.86	5.75	666.58	664.58
O	63+13.33	12.36	666.58	664.58
P	63+07.53	11.99	666.58	664.58
Q	63+13.17	14.85	666.58	664.58
R	63+07.40	14.49	666.58	664.58
S	63+12.76	21.09	666.58	664.58
T	63+07.09	20.73	666.58	664.58

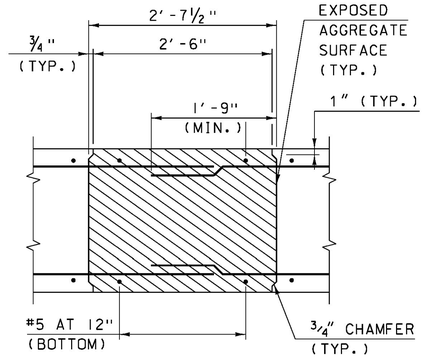

JOINT DETAIL SECTION

SCALE: 1" = 1′-0"

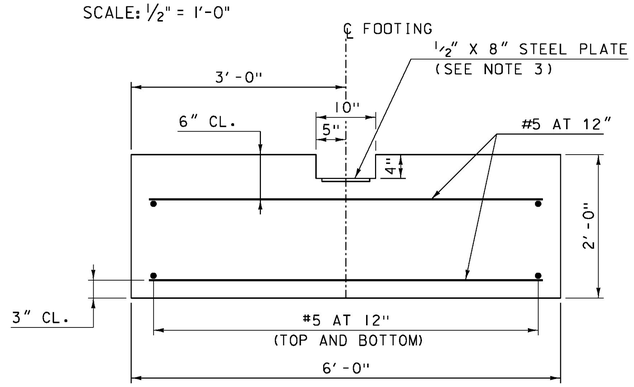

FOOTING TYPICAL MASONRY AND REINFORCING SECTION

SCALE: 1" = 1′-0"

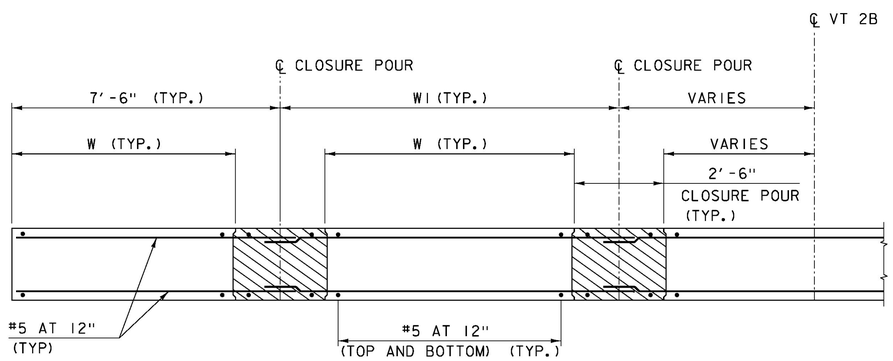

SECTION A-A

SCALE: ½" = 1′-0"

NOTES:

1. FABRICATOR TO DESIGN CONCRETE SPREAD FOOTING AND LIFTING POINTS AND LOCATIONS FOR ERECTION STRESSES AND INCLUDE CALCULATIONS WITH SUBMITTAL. SEE NOTE 37 ON SHEET 10.
2. 2" CLEAR UNLESS OTHERWISE NOTED ON THE PLANS.
3. SEE SHEET 36 FOR FOOTING CONNECTION DETAIL.

PROJECT NAME:	ST. JOHNSBURY
PROJECT NUMBER:	BF 7000(20)

FILE NAME: 86e048/cos/z86e048sub.dgn	PLOT DATE: 10/26/2016
PROJECT LEADER: J.BYATT	DRAWN BY: M.SMITH
DESIGNED BY: A. GIRALDI	CHECKED BY: S.BEAUMONT
SPREAD FOOTINGS DETAILS SHEET 2	SHEET 42 OF 70

CLD CONSULTING ENGINEERS

CLD 14-0116 MODEL: SUB13

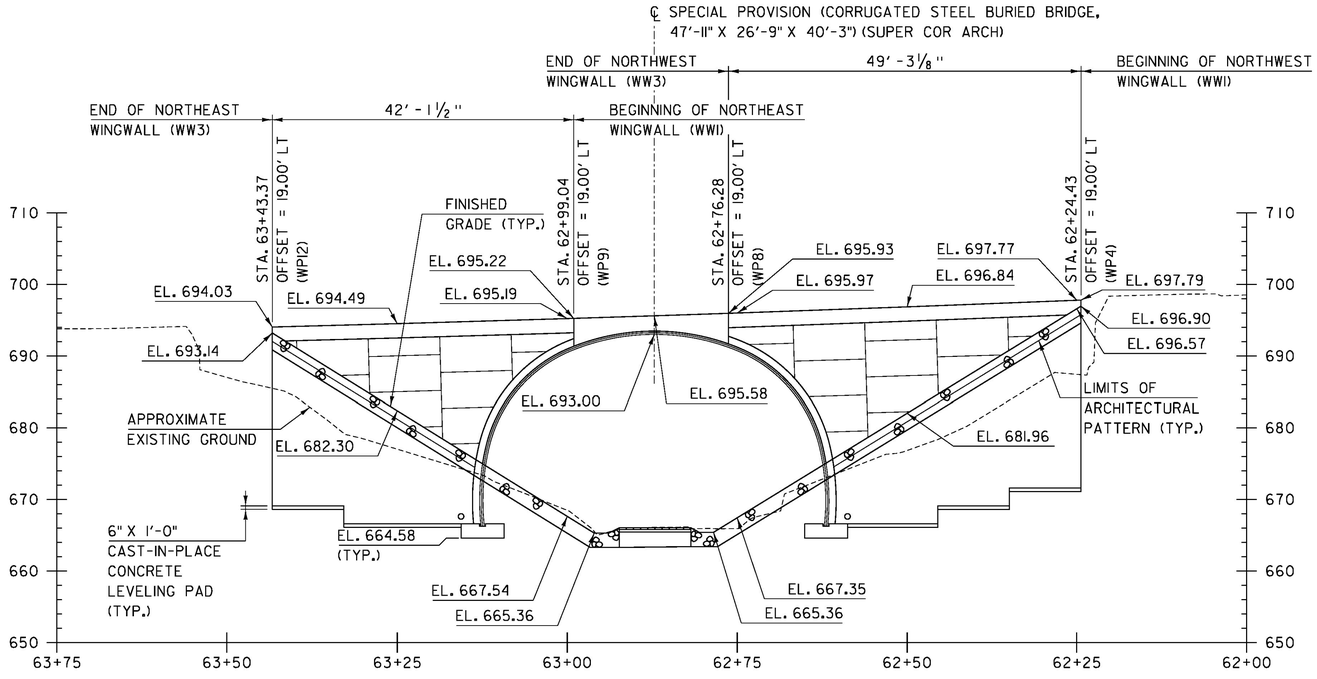

NORTH WINGWALL ELEVATIONS

SCALE: 1" = 10'-0"

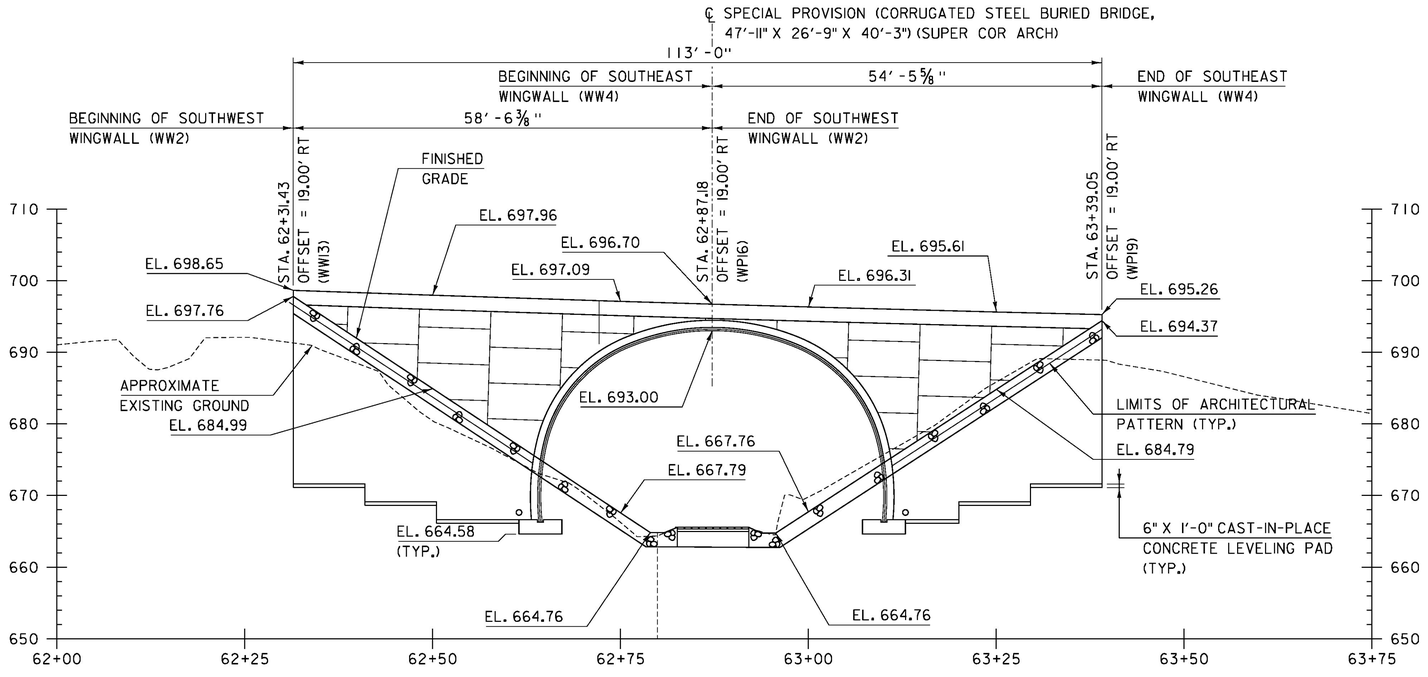

SOUTH WINGWALL ELEVATIONS

SCALE: 1" = 10'-0"

NOTES:

1. SEE SHEET 34 FOR WORKING POINT LAYOUT.
2. VIST-A-WALL MANUFACTURER SHALL PROVIDED LEVELING PAD STEP HEIGHTS AND ELEVATIONS.

CLD 14-0116 MODEL: SUBI4

PROJECT NAME:	ST. JOHNSBURY
PROJECT NUMBER:	BF 7000(20)
FILE NAME: 86e048/cos/z86e048sub.dgn	PLOT DATE: 10/26/2016
PROJECT LEADER: J. BYATT	DRAWN BY: M. SMITH
DESIGNED BY: A. GIRALDI	CHECKED BY: S. BEAUMONT
WALL ELEVATION SHEET 1	SHEET 43 OF 70

CLD CONSULTING ENGINEERS

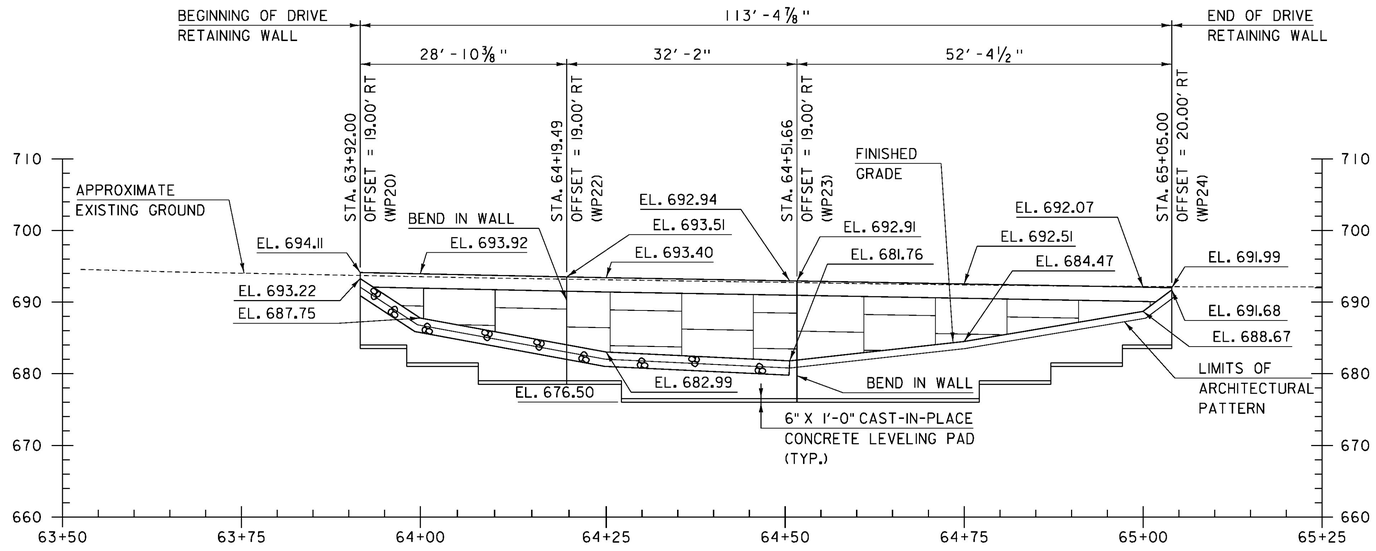

DRIVE RETAINING WALL ELEVATION

SCALE: 1" = 10'-0"

NOTES:

1. SEE SHEET 34 FOR WORKING POINT LAYOUT.
2. VIST-A-WALL MANUFACTURER SHALL PROVIDED LEVELING PAD STEP HEIGHTS AND ELEVATIONS.

PROJECT NAME:	ST. JOHNSBURY
PROJECT NUMBER:	BF 7000(20)

FILE NAME: 86e048/cos/z86e048sub.dgn	PLOT DATE: 10/26/2016
PROJECT LEADER: J. BYATT	DRAWN BY: M. SMITH
DESIGNED BY: A. GIRALDI	CHECKED BY: S. BEAUMONT
WALL ELEVATION SHEET 2	SHEET 44 OF 70

CLD 14-0116 MODEL: SUB15

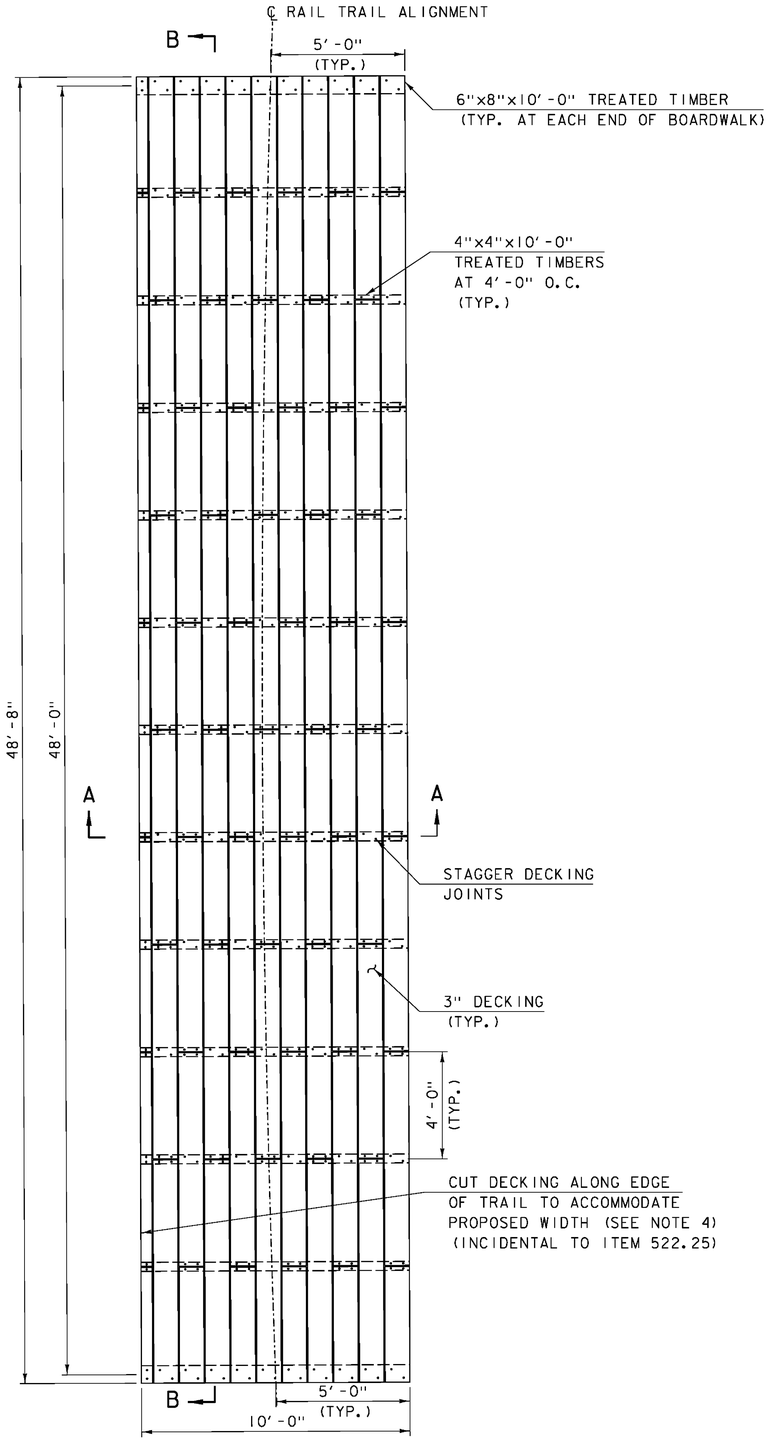

BOARDWALK PLAN

SCALE: 3/8" = 1'-0"

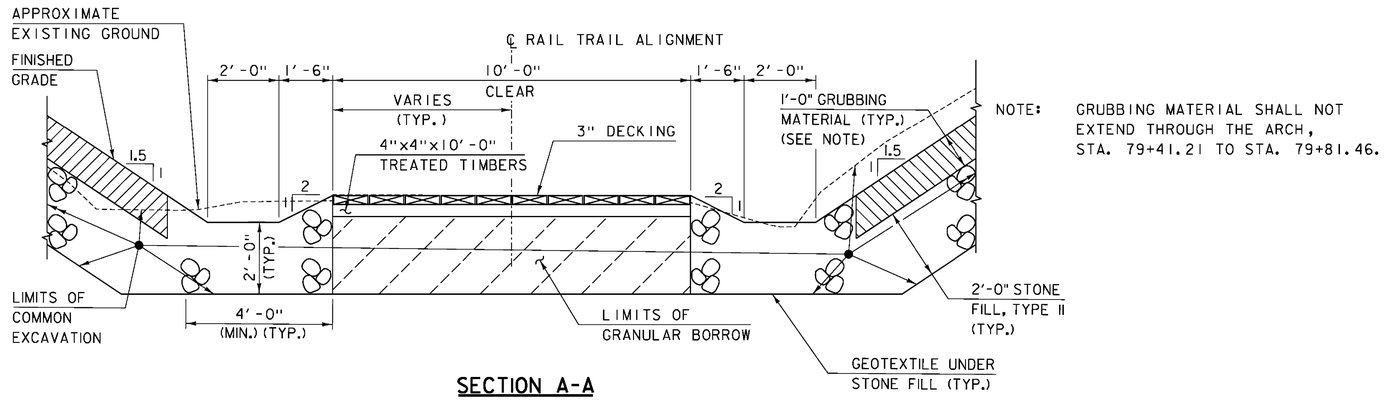

NOTE: GRUBBING MATERIAL SHALL NOT EXTEND THROUGH THE ARCH, STA. 79+41.21 TO STA. 79+81.46.

SECTION A-A

STA. 79+37.00 TO STA. 79+85.67
SCALE: 1/2" = 1'-0"

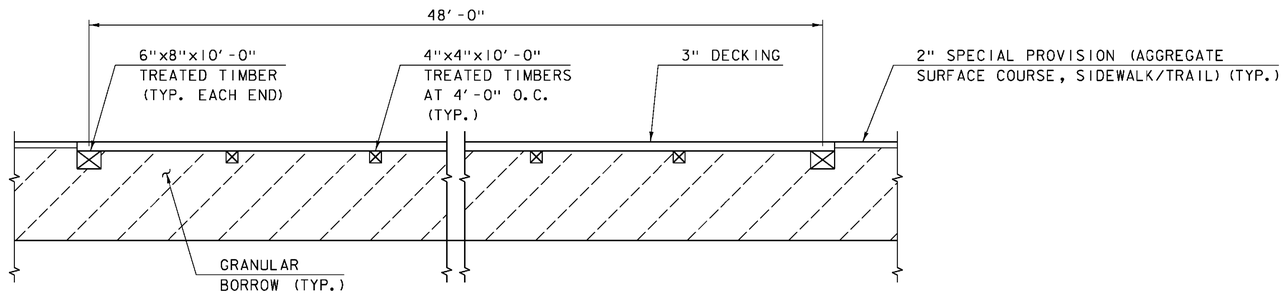

SECTION B-B

SCALE: 1/2" = 1'-0"

NOTES:

1. 3" DECKING SHALL BE TAMARACK OR HEMLOCK ROUGH SAWN PLANKS WITH 3/8" MAX GAP BETWEEN DRY LUMBER PLANKS, SHALL BE ACQ TREATED TO AWPA STANDARDS, AND WILL BE PAID FOR UNDER ITEM 522.25, "STRUCTURAL LUMBER AND TIMBER, TREATED".

2. DECKING JOINTS SHALL OCCUR AT TIE LOCATIONS. JOINTS SHALL BE STAGGERED SUCH THAT NO TWO JOINTS ARE ADJACENT.

3. DECK PLANKING CONNECTIONS SHALL BE MADE WITH 1/4" X 5" LONG SCREWS WITH A 5/16" HEX WITH OVERSIZED WASHER HEAD MADE OF TREATED STEEL AND COATED WITH A MULTI-COATED CORROSION PROTECTOR COMPATIBLE WITH ACQ TIMBER TREATMENT. THE MINIMUM THREAD LENGTH IS 2 3/4". THESE SCREWS SHALL BE COUNTERSUNK A MINIMUM OF 3/8" AND LOCATED AT THE END OF EACH PLANK INTO THE 6"X8" TREATED TIMBER.

4. THE TRAIL ALIGNMENT FOLLOWS A HORIZONTAL CURVE. HOWEVER, THE BOARDWALK THROUGH THE STRUCTURE SHALL BE STRAIGHT. THE WEST DECKING BOARDS SHALL BE CUT TO ACCOMMODATE THE PROPOSED BOARDWALK WIDTH OF 10'-0". ADJUST SCREWS TO ENSURE A MINIMUM OF 2 SCREWS ARE UTILIZED AT THE END OF EACH DECKING BOARD AND AT EACH TIMBER SUPPORT AS SHOWN IN THE BOARDWALK PLAN.

ROUGHCUT HEMLOCK DECKING

5. TREATED SUPPORT TIMBERS SHALL BE ACQ TREATED TO AWPA STANDARDS. THE COST FOR THE TREATED SUPPORT TIMBERS AND FASTENERS FOR THE BOARDWALK WILL BE PAID FOR UNDER ITEM 522.25, "STRUCTURAL LUMBER AND TIMBER, TREATED".

CONSULTING ENGINEERS

PROJECT NAME:	ST. JOHNSBURY
PROJECT NUMBER:	BF 7000(20)
FILE NAME: 86e048/cos/z86e048boardwalk.dgn	PLOT DATE: 10/26/2016
PROJECT LEADER: J.BYATT	DRAWN BY: M.SMITH
DESIGNED BY: A.GIRALDI	CHECKED BY: S.BEAUMONT
BOARDWALK DETAIL SHEET	SHEET 45 OF 70

MODEL: Untitled Sheet

CLD 14-0116

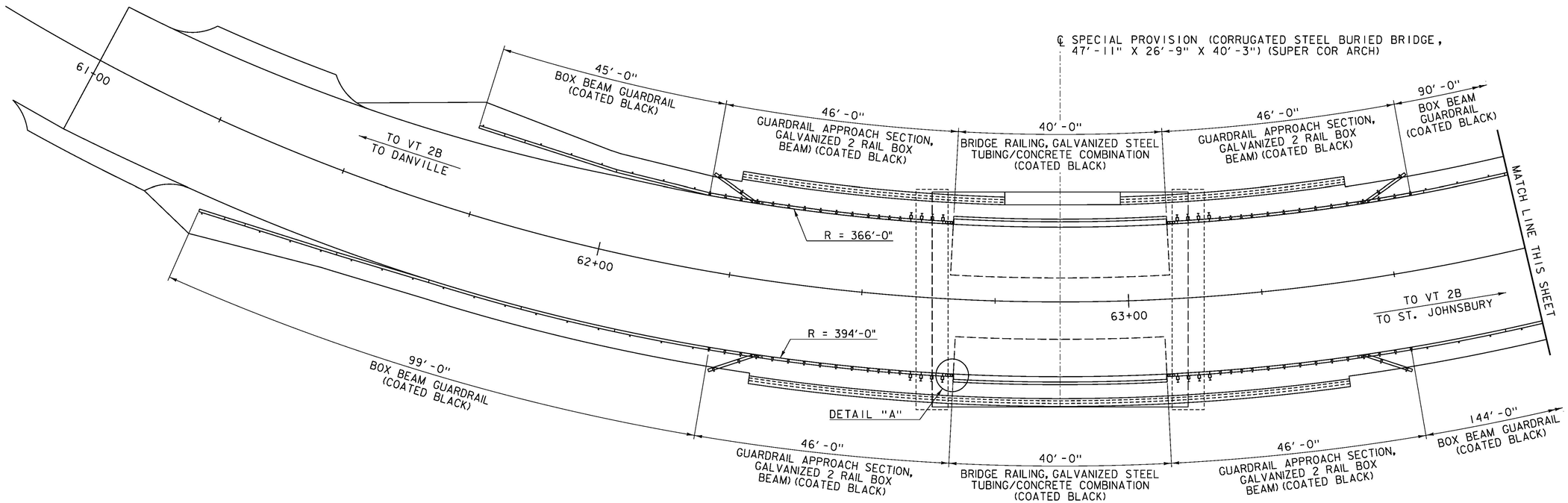

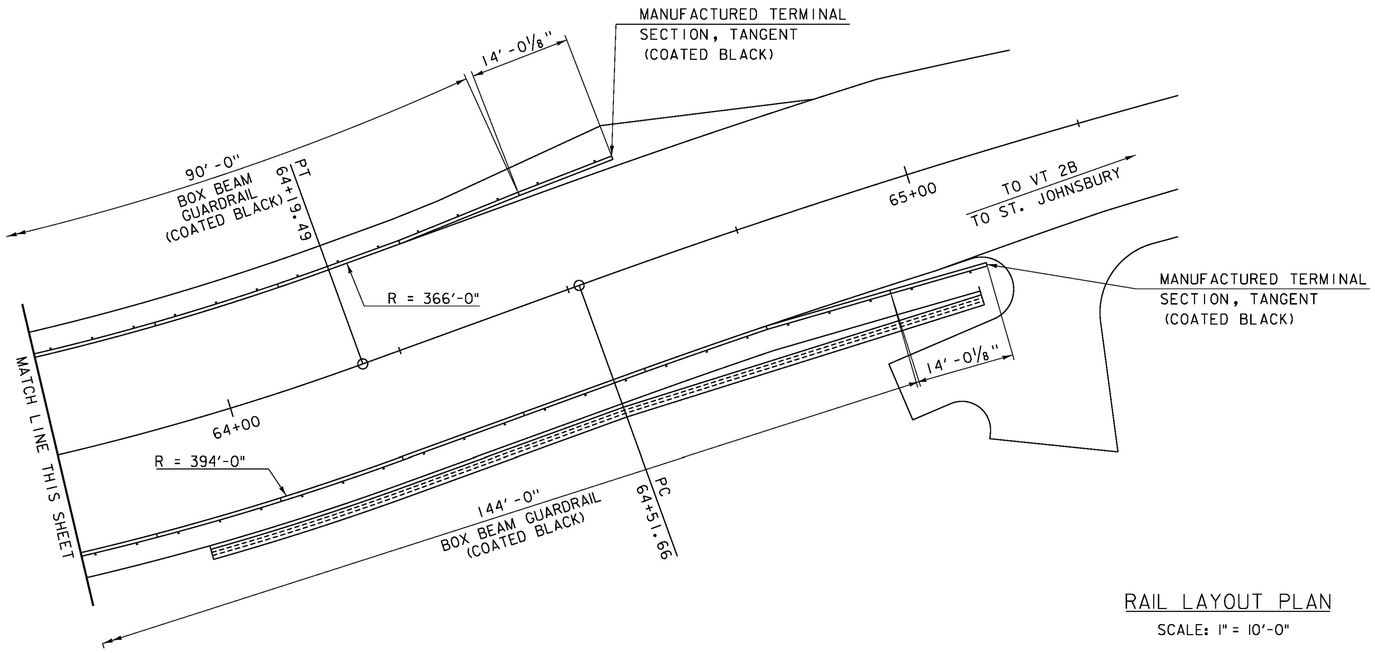

RAIL LAYOUT PLAN

SCALE: 1" = 10'-0"

NOTE:

1. SEE STANDARDS G-1bM, G-19, S-352A, S-352B, AND S-352C AND BRIDGE AND APPROACH RAIL DETAIL SHEETS 46 THROUGH 50.
2. SEE NOTE 39 ON SHEET 10.

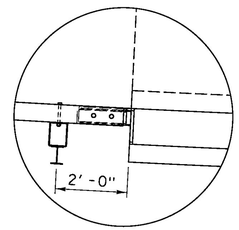

DETAIL A

SCALE: 1/2" = 1'-0"

0 10 20

(SCALE 1" = 10')

CONSULTING ENGINEERS CLD

PROJECT NAME: ST. JOHNSBURY	
PROJECT NUMBER: BF 7000(20)	
FILE NAME: 86e048/cos/z86e048rail.dgn	PLOT DATE: 10/26/2016
PROJECT LEADER: J. BYATT	DRAWN BY: M. SMITH
DESIGNED BY: M. SMITH	CHECKED BY: S. BEAUMONT
RAIL LAYOUT SHEET	SHEET 46 OF 70

CLD 14-0116 MODEL: Sheet01

NOTES:

1. SEE STANDARDS S-352A. S-352B, AND S-352C FOR ADDITIONAL INFORMATION.
2. THE BRIDGE PLAQUE FURNISHED BY THE AGENCY SHALL BE CAST INTO THE FACE OF THE RAIL AT THE NORTHEAST CORNER AS SHOWN IN THE BRIDGE PLAQUE LOCATION DETAIL BELOW. ALL WORK TO INSTALL THE PLAQUE WILL BE CONSIDERED INCIDENTAL TO CONTRACT ITEM 525.45, "BRIDGE RAILING, GALVANIZED STEEL TUBING/CONCRETE COMBINATION (COATED BLACK)". SEE STRUCTURES DETAIL SD-502.00 FOR FURTHER DETAILS.
3. SEE SHEET 49 FOR APPROACH RAIL CONNECTION DETAIL.

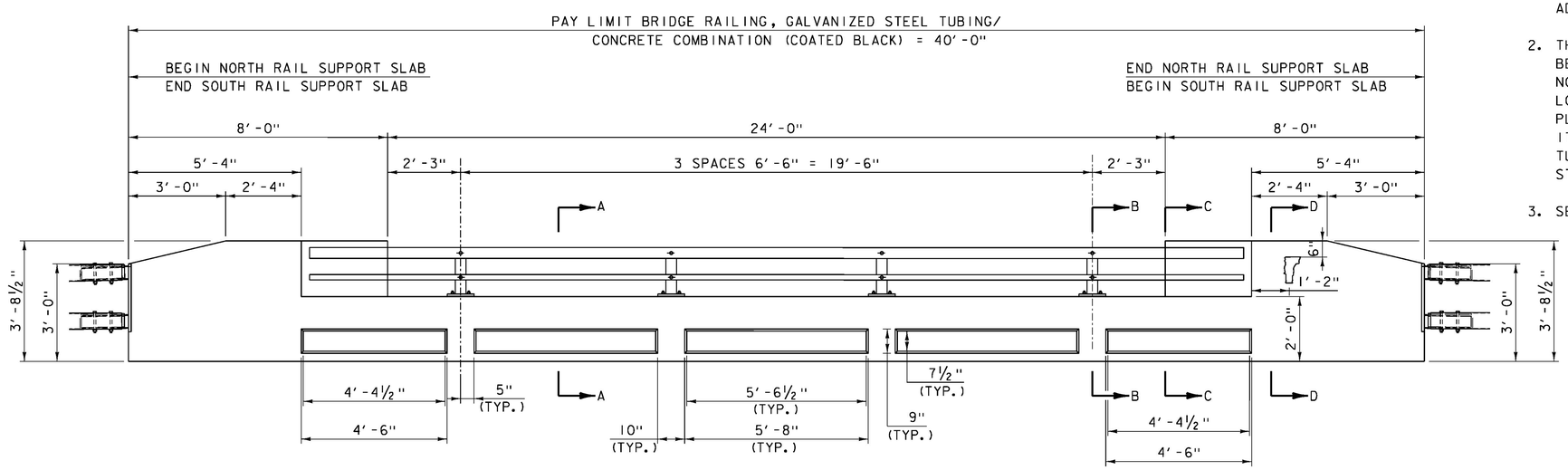

ROADWAY ELEVATION OF RAIL

SCALE: ½" = 1'-0"

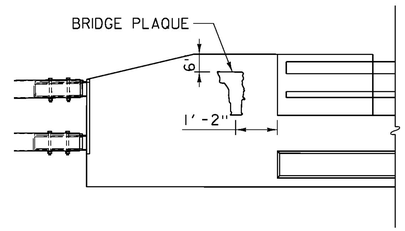

BRIDGE PLAQUE LOCATION DETAIL

SCALE: ½" = 1'-0"

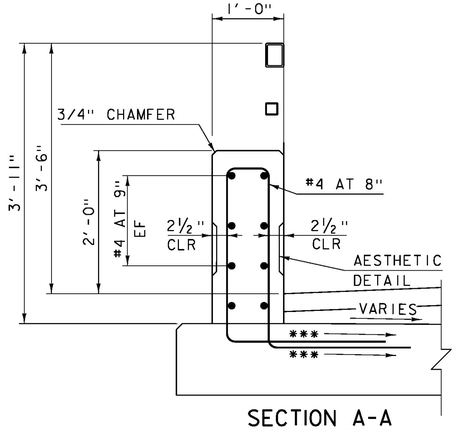

SECTION A-A

SCALE 1"=1'-0"

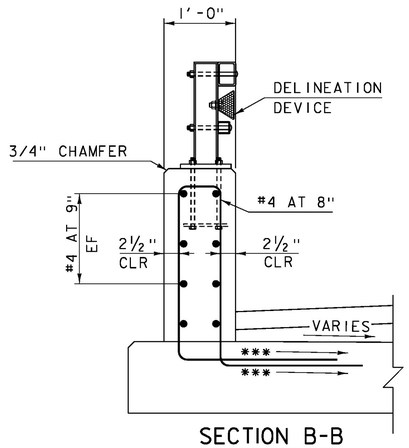

SECTION B-B

SCALE 1"=1'-0"

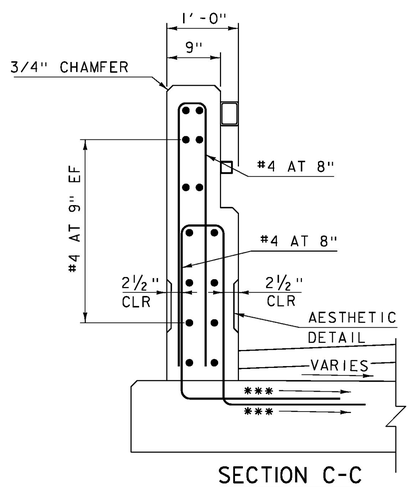

SECTION C-C

SCALE 1"=1'-0"

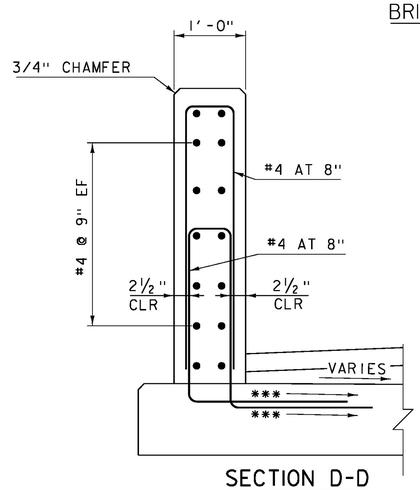

SECTION D-D

SCALE 1"=1'-0"

NOTES:

NF = NEAR FACE
FF = FAR FACE
EF = EACH FACE
3" CLEAR, UNLESS OTHERWISE SPECIFIED ON THE THE PLANS.
2'-2" BAR LAP UNLESS OTHERWISE SPECIFIED ON THE PLANS
*** MATCH SLOPE OF NEAREST TRANSVERSE STEEL

PROJECT NAME:	ST. JOHNSBURY
PROJECT NUMBER:	BF 7000(20)
FILE NAME: 86e048/cos/z86e048rail.dgn	PLOT DATE: 10/26/2016
PROJECT LEADER: J. BYATT	DRAWN BY: M. SMITH
DESIGNED BY: M. SMITH	CHECKED BY: S. BEAUMONT
BRIDGE RAIL DETAILS SHEET	SHEET 47 OF 70

CONSULTING ENGINEERS

MODEL: Sheet02

CLD 14-0116

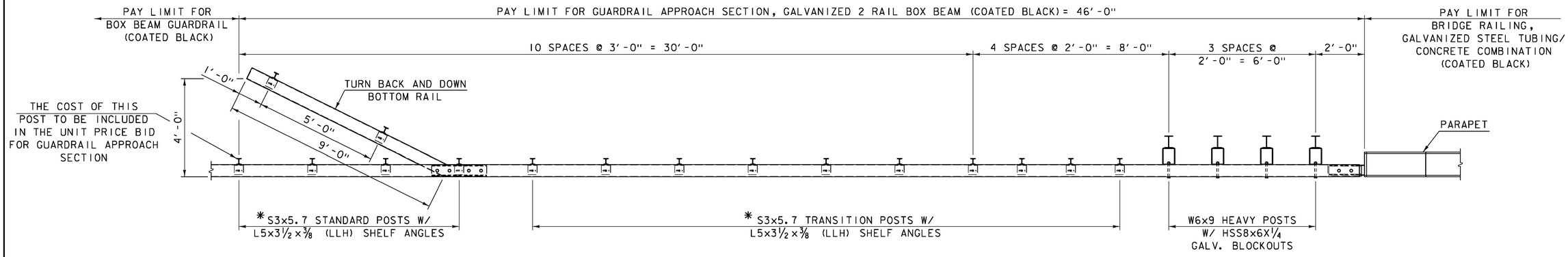

*SEE STD. GI-BM FOR POST CONNECTION DETAILS

APPROACH RAIL PLAN

NOT TO SCALE

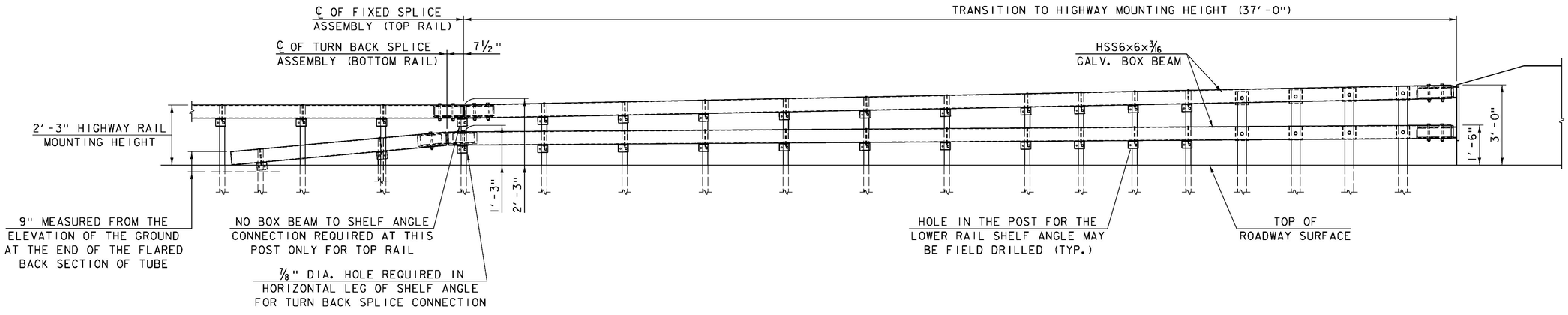

APPROACH RAIL ELEVATION

NOT TO SCALE

PROJECT NAME: ST. JOHNSBURY	
PROJECT NUMBER: BF 7000(20)	
FILE NAME: 86e048/cos/z86e048rail.dgn	PLOT DATE: 10/26/2016
PROJECT LEADER: J. BYATT	DRAWN BY: M. SMITH
DESIGNED BY: M. SMITH	CHECKED BY: S. BEAUMONT
APPROACH RAIL DETAILS SHEET 1	SHEET 48 OF 70

CLD 14-0116 MODEL: Sheet103

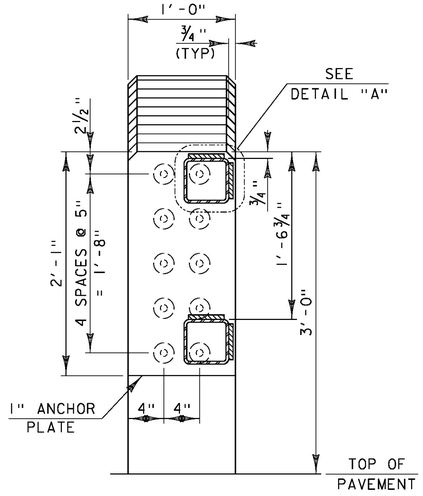

SECTION A-A
NOT TO SCALE

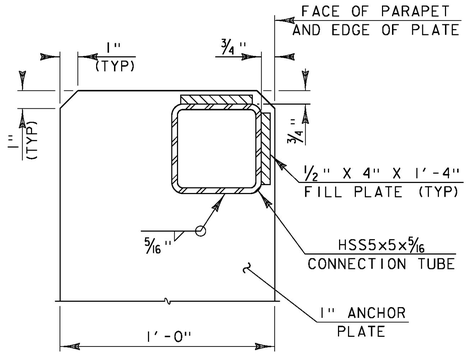

DETAIL "A"
NOT TO SCALE

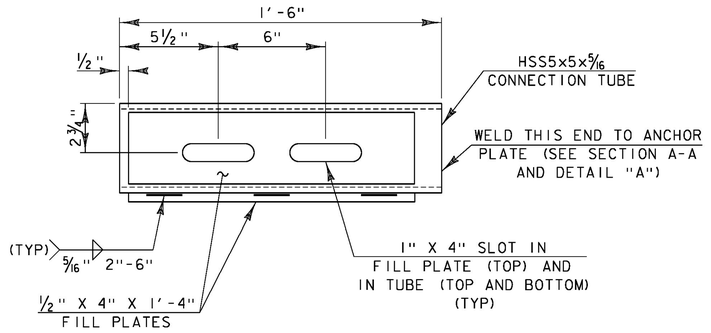

CONNECTION TUBE DETAIL PLAN
NOT TO SCALE

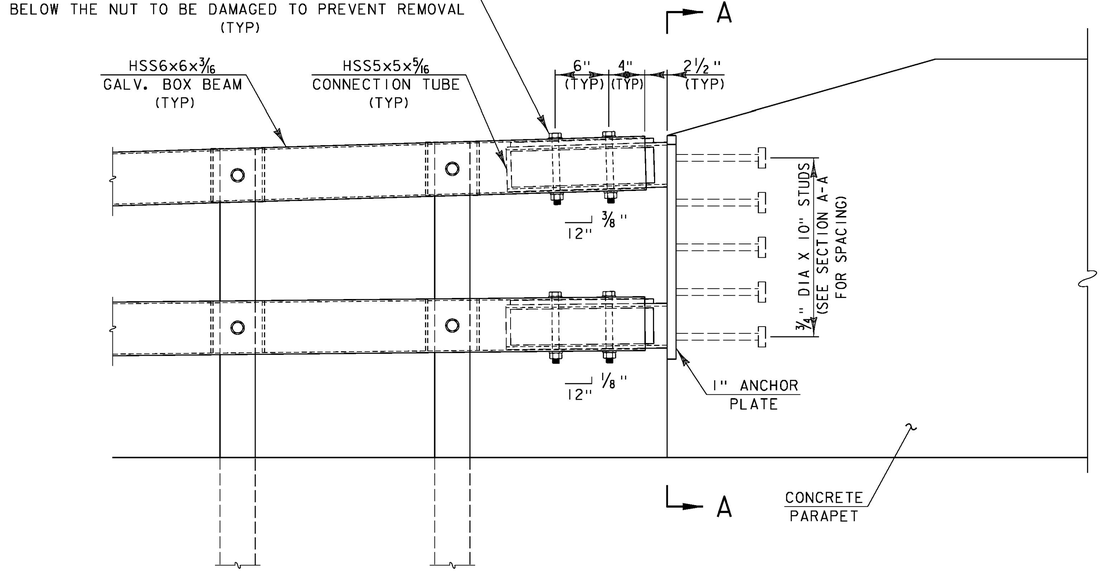

APPROACH RAIL CONNECTION DETAIL
NOT TO SCALE

PROJECT NAME: ST. JOHNSBURY	
PROJECT NUMBER: BF 7000(20)	
FILE NAME: 86e048/cos/z86e048rail.dgn	PLOT DATE: 10/26/2016
PROJECT LEADER: J. BYATT	DRAWN BY: M. SMITH
DESIGNED BY: M. SMITH	CHECKED BY: S. BEAUMONT
APPROACH RAIL DETAILS SHEET 2	SHEET 49 OF 70

CLD 14-0116 MODEL: Sheet04

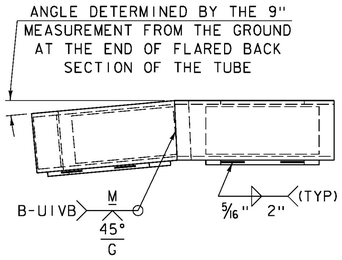

ELEVATION

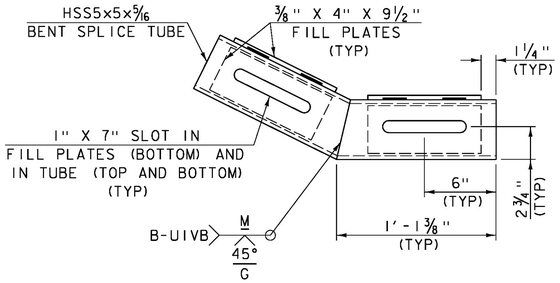

PLAN

FLARED BACK SPLICE TUBE DETAIL

NOT TO SCALE

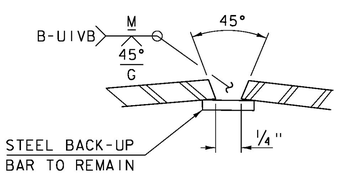

WELD DETAIL FOR SPLICE TUBE

NOT TO SCALE

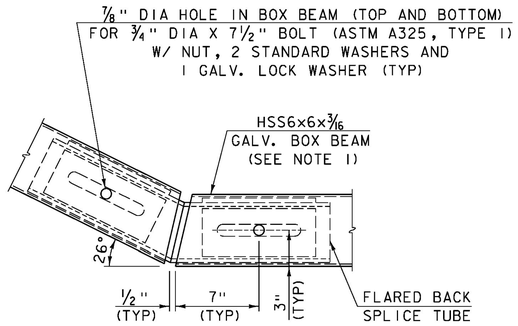

PLAN BOTTOM RAIL FLARE BACK DETAIL

NOT TO SCALE

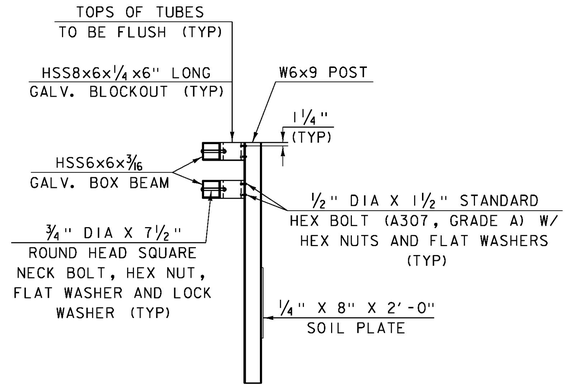

HEAVY POST ELEVATION

NOT TO SCALE

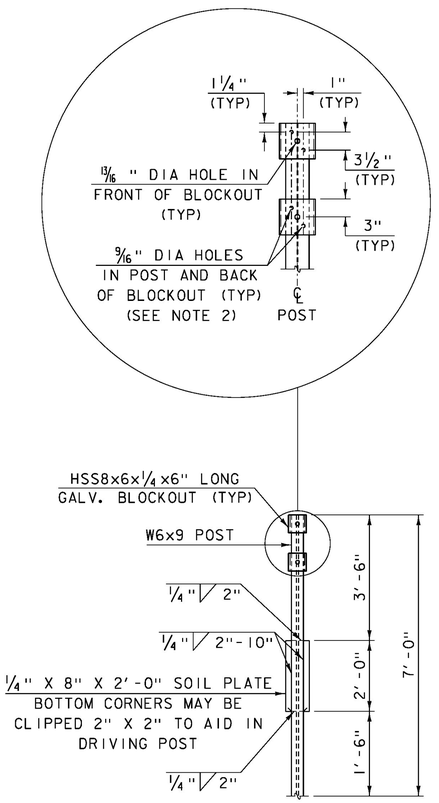

HEAVY POST DETAIL

NOT TO SCALE

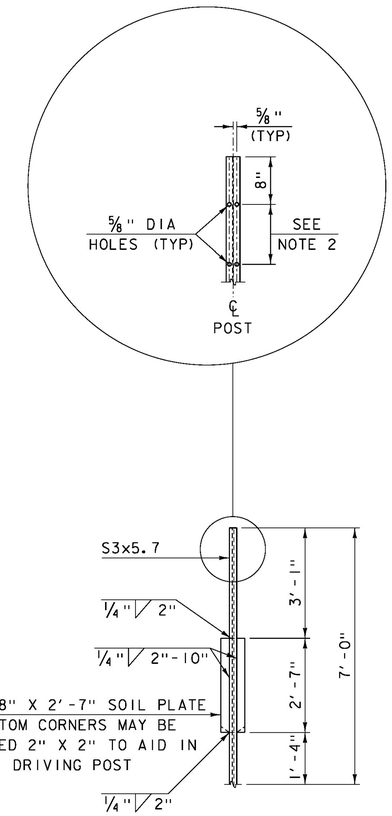

TRANSITION POST DETAIL

NOT TO SCALE

NOTES:

1. PROTRUSIONS CAUSED BY WELDING OR GALVANIZING ARE NOT PERMITTED ON THE ADJOINING SURFACES OF THE BOX BEAM RAILS, SPLICE TUBES AND FILL PLATES.

2. HOLES IN POST FOR LOWER RAIL MAY BE LOCATED AND DRILLED IN THE FIELD. IF SO, GALVANIZING SHALL BE REPAIRED.

CONSULTING ENGINEERS

PROJECT NAME: ST. JOHNSBURY	
PROJECT NUMBER: BF 7000(20)	
FILE NAME: 86e048/cos/z86e048rail.dgn	PLOT DATE: 10/26/2016
PROJECT LEADER: J. BYATT	DRAWN BY: M. SMITH
DESIGNED BY: M. SMITH	CHECKED BY: S. BEAUMONT
APPROACH RAIL DETAILS SHEET 3	SHEET 50 OF 70

CLD 14-0116 MODEL: Sheet05

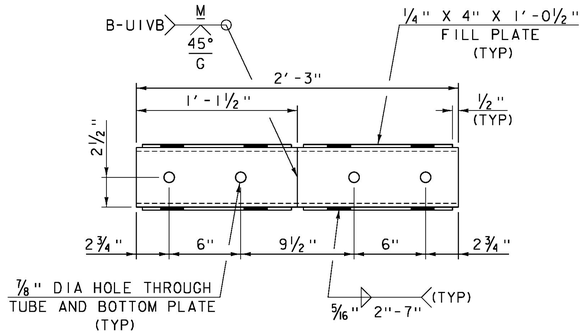

FIXED SPLICE TUBE PLAN

NOT TO SCALE

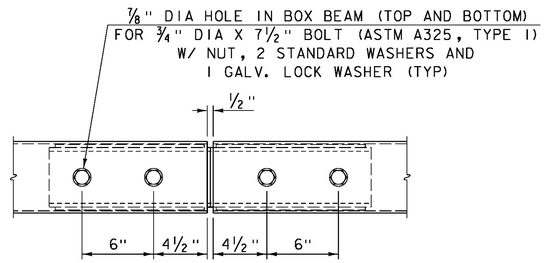

FIXED SPLICE ASSEMBLY PLAN

NOT TO SCALE

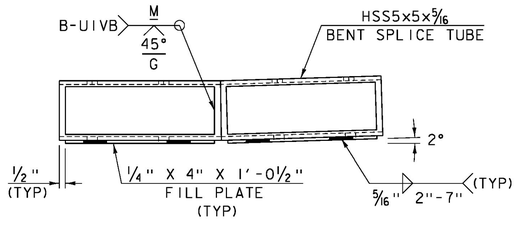

FIXED SPLICE TUBE ELEVATION

NOT TO SCALE

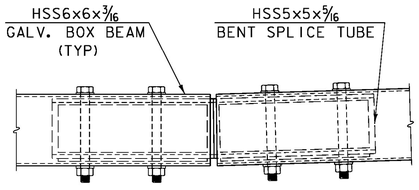

FIXED SPLICE ASSEMBLY ELEVATION

NOT TO SCALE

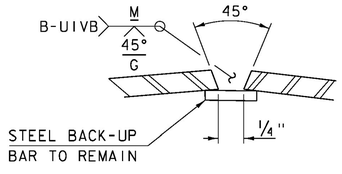

WELD DETAIL
FOR SPLICE TUBE

NOT TO SCALE

CLD 14-0116 MODEL: Sheet06

PROJECT NAME: ST. JOHNSBURY	
PROJECT NUMBER: BF 7000(20)	
FILE NAME: 86e048/cos/z86e048rail.dgn	PLOT DATE: 10/26/2016
PROJECT LEADER: J. BYATT	DRAWN BY: M. SMITH
DESIGNED BY: M. SMITH	CHECKED BY: S. BEAUMONT
APPROACH RAIL DETAILS SHEET 4	SHEET 51 OF 70

STATE OF VERMONT
AGENCY OF TRANSPORTATION

REINFORCING STEEL SCHEDULE

ITEM	EACH	SIZE	LENGTH	MARK	TYPE	A	B	C	D	E	F	G	H	J	K	R	O
	SOUTH COLLAR																
	2	4	28'- 2"	ESC401	9		28'- 2"						3'- 2"			31'- 2"	27'- 3"
	4	4	19'- 1"	ESC402	9		19'- 1"						2'- 3"			20'- 0"	18'- 4"
	4	4	12'- 7"	ESC403	9		12'- 7"						0'- 7"			33'- 5"	12'- 6"
✳	3	4	24'- 10"	ESC404	9		24'- 10"						2'- 5"			31'- 10"	24'- 2"
	4	4	23'- 7"	ESC405	9		23'- 7"						3'- 3"			20'- 8"	22'- 4"
	4	4	10'- 10"	ESC406	9		10'- 10"						0'- 5"			34'- 1"	10'- 9"
✳ ▲	175	4	1'- 9"	ESC407	17		0'- 8"	1'- 1"	0'- 0"								
	NORTH COLLAR																
▲	23	4	9'- 8"	ENC401	17		3'- 10"	2'- 0"	3'- 10"								
✳	8	4	21'- 3"	ENC402	STR	21'- 3"											
	2	4	3'- 2"	ENC403	STR	3'- 2"											
	2	4	2'- 1"	ENC404	STR	2'- 1"											
	2	4	21'- 8"	ENC405	9		21'- 8"						1'- 10"			31'- 2"	21'- 3"
	2	4	19'- 6"	ENC406	9		19'- 6"						2'- 4"			20'- 0"	18'- 9"
	2	4	20'- 6"	ENC407	9		20'- 6"						2'- 7"			20'- 0"	19'- 7"
	4	4	12'- 7"	ENC408	9		12'- 7"						0'- 7"			33'- 5"	12'- 6"
	2	4	22'- 4"	ENC409	9		22'- 4"						2'- 11"			20'- 8"	21'- 3"
	2	4	23'- 4"	ENC410	9		23'- 4"						3'- 3"			20'- 8"	22'- 1"
	4	4	10'- 10"	ENC411	9		10'- 10"						0'- 5"			34'- 1"	10'- 9"
✳ ▲	135	4	1'- 8"	ENC412	17		0'- 8"	1'- 0"	0'- 0"								

~ NOTES ~

1. UNLESS OTHERWISE DESIGNATED, ALL BAR REINFORCEMENT FOR CONCRETE IN SIZES UP TO AND INCLUDING NO. 18 SHALL CONFORM TO THE REQUIREMENTS OF THE "SPECIFICATIONS FOR DEFORMED BILLET-STEEL BARS FOR CONCRETE REINFORCEMENT", AASHTO M 31 (ASTM A 615-SI). ALL BARS SHALL BE GRADE 60, UNLESS OTHERWISE DESIGNATED.
2. FOR TYPICAL BENDING DETAILS, RECOMMENDED PIN DIAMETER "D" OF BENDS AND HOOKS, AND OTHER STANDARD PRACTICE, SEE CURRENT CONCRETE REINFORCING STEEL INSTITUTE "MANUAL OF STANDARD PRACTICE".
3. BARS WHICH REQUIRE MORE ACCURATE BENDING THAN STANDARD PRACTICES SHOULD HAVE LIMITS INDICATED.
4. ALL DIMENSIONS ARE OUT TO OUT OF BAR EXCEPT "A" AND "G" ON STANDARD 180 DEGREE AND 135 DEGREE HOOKS.
5. "J" DIMENSION ON 180 DEGREE HOOKS TO BE SHOWN ONLY WHERE NECESSARY TO RESTRICT HOOK SIZE. OTHERWISE, STANDARD HOOKS ARE TO BE USED.
6. "H" DIMENSION ON STIRRUPS TO BE SHOWN ONLY WHEN NECESSARY TO MAINTAIN CLEARANCES.
7. WHERE SLOPE DIFFERS FROM 45 DEGREES, DIMENSIONS "H" AND "K" MUST BE SHOWN.
8. ▲ DENOTES BARS TO BE CUT IN FIELD.
9. ✳ DENOTES ONE EXTRA BAR ADDED FOR TESTING PURPOSES.
10. △ DENOTES TWO EXTRA BARS ADDED FOR TESTING PURPOSES.
11. E IN BAR MARK PREFIX DENOTES EPOXY COATED REINFORCING STEEL.

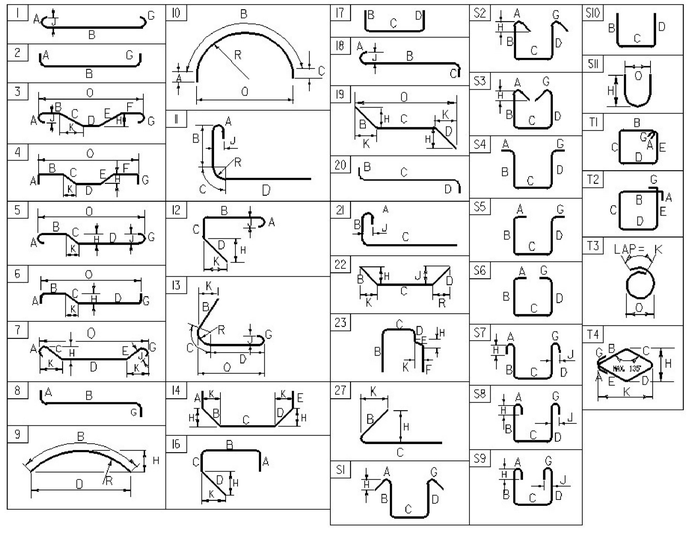

ASTM STANDARD REINFORCING BARS

BAR SIZE DESIGNATION	WEIGHT POUNDS PER FOOT	NOMINAL DIMENSIONS ROUND SECTION		
		DIAMETER INCHES	AREA INCHES^2	PERIMETER INCHES
#3	0.376	0.375	0.11	1.178
#4	0.668	0.500	0.20	1.571
#5	1.043	0.625	0.31	1.963
#6	1.502	0.750	0.44	2.356
#7	2.044	0.875	0.60	2.749
#8	2.670	1.000	0.79	3.142
#9	3.400	1.128	1.00	3.544
#10	4.303	1.270	1.27	3.990
#11	5.313	1.410	1.56	4.430
#14	7.65	1.693	2.25	5.32
#18	13.60	2.257	4.00	7.09

PROJECT NAME: ST. JOHNSBURY
PROJECT NUMBER: BF 7000(20)

FILE NAME: 86e048/cos/z86e048schedule.dgn PLOT DATE: 10/26/2016
PROJECT LEADER: J. BYATT DRAWN BY: M. SMITH
DESIGNED BY: A. GIRALDI CHECKED BY: S. BEAUMONT
REINFORCING STEEL SCHEDULE SHEET 52 OF 70

CLD 14-0116 MODEL: Schedule

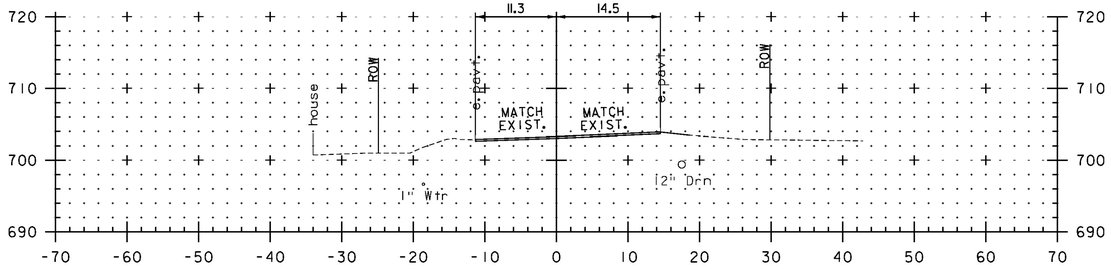

61+00
DRIVE RT
BEGIN APPROACH

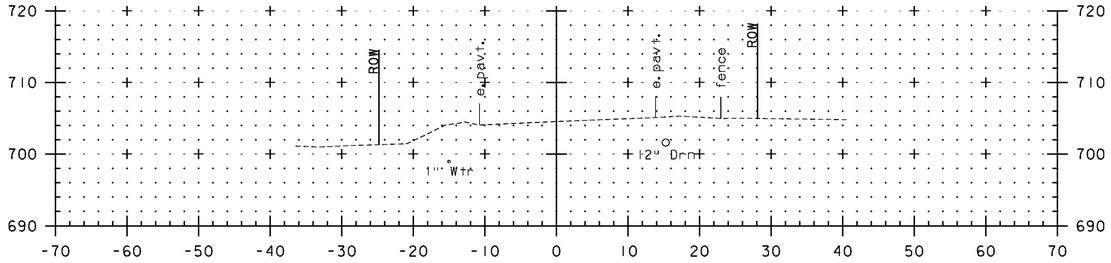

60+75

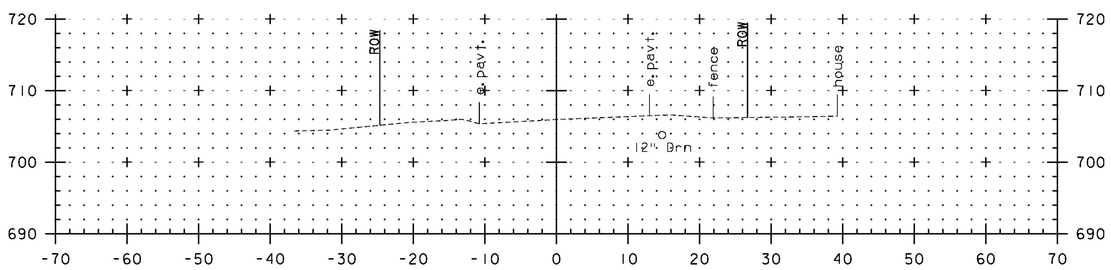

60+50

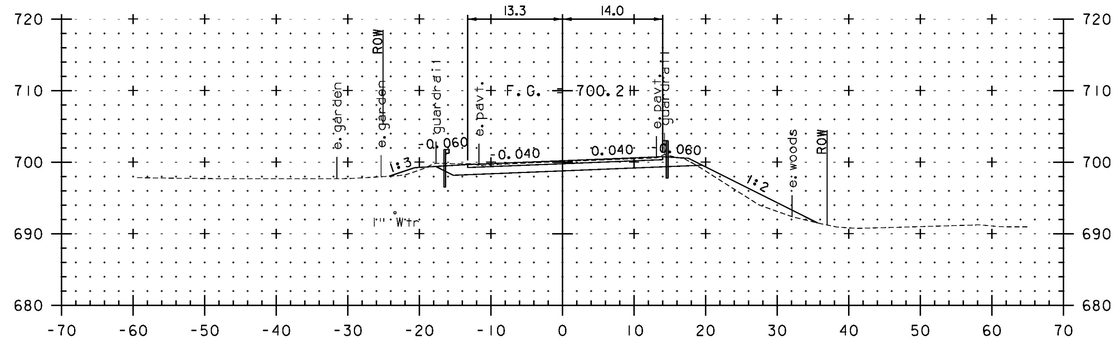

61+75

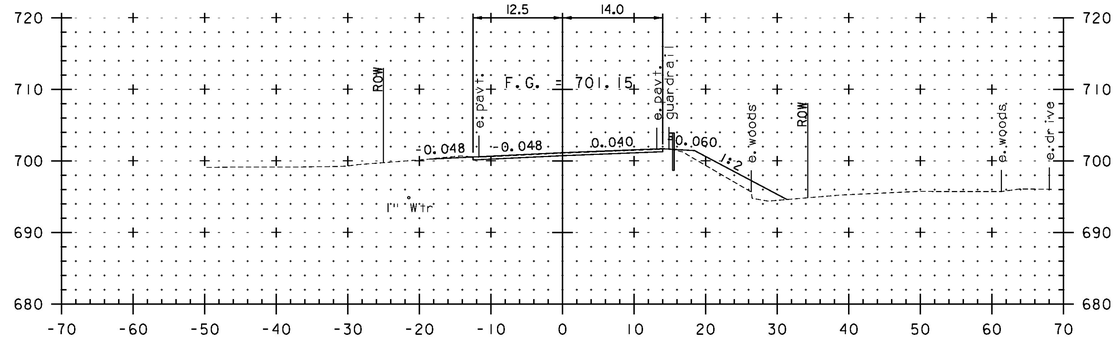

61+50

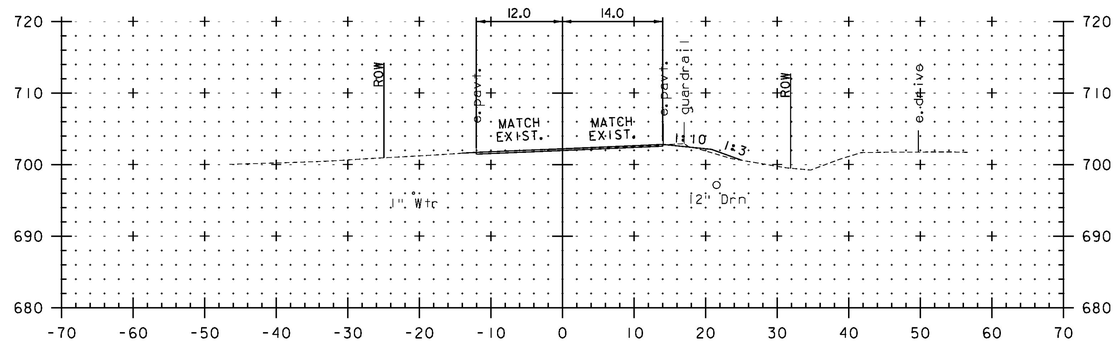

61+25
DRIVE LT

STA. 60+50 TO STA. 61+75

0 10 20
(SCALE 1" = 10')

CONSULTING ENGINEERS

PROJECT NAME:	ST. JOHNSBURY
PROJECT NUMBER:	BF 7000(20)
FILE NAME: 86e048/cos/z86e048xs.dgn	PLOT DATE: 10/26/2016
PROJECT LEADER: J. BYATT	DRAWN BY: M. HALEY
DESIGNED BY: M. HALEY	CHECKED BY: P.SHEDD
VT 2B CROSS SECTIONS 1	SHEET 53 OF 70

CLD 14-0116 MODEL: MAINLINE XSOI

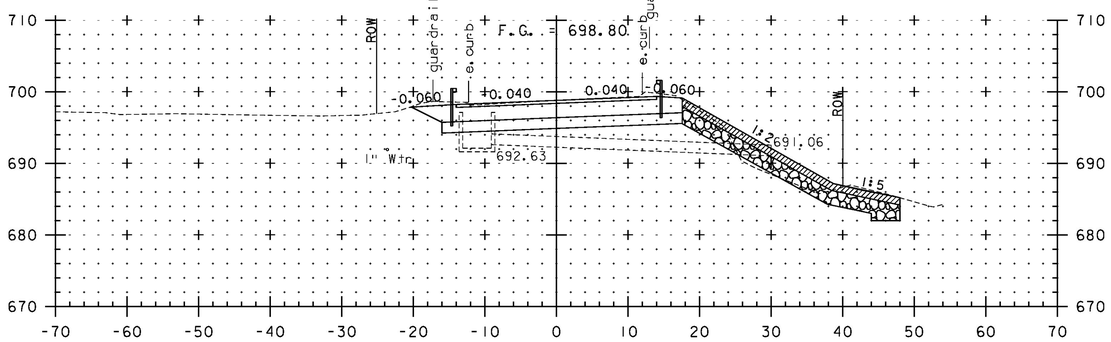

62+12

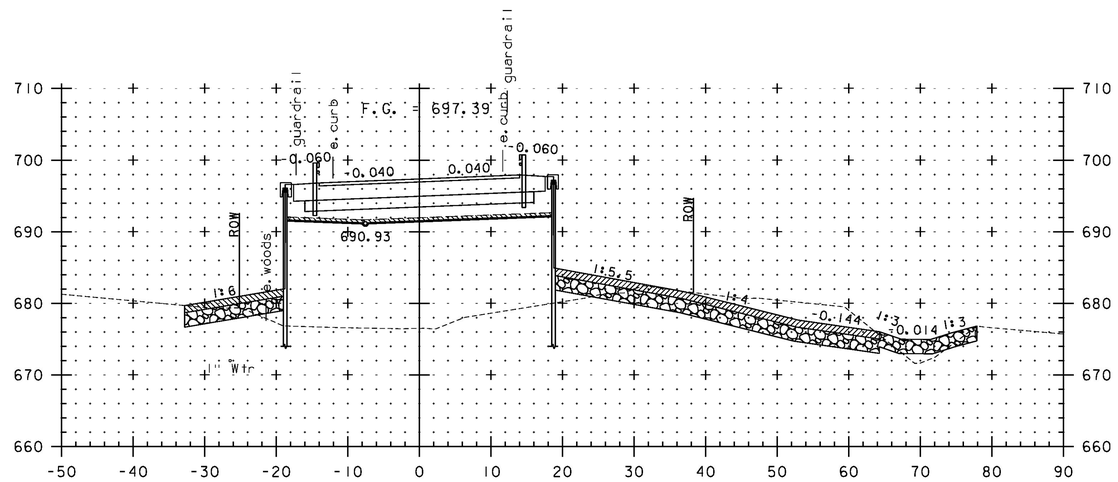

62+50

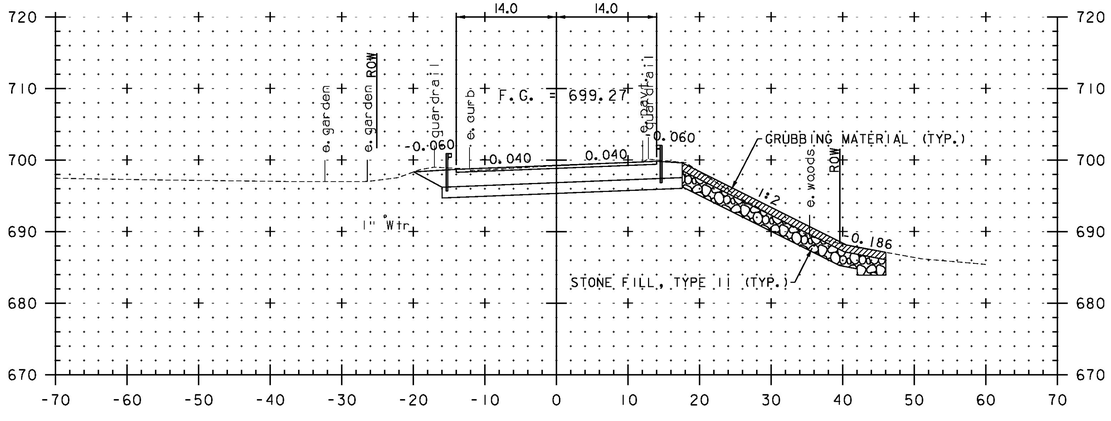

62+00
BEGIN PROJECT

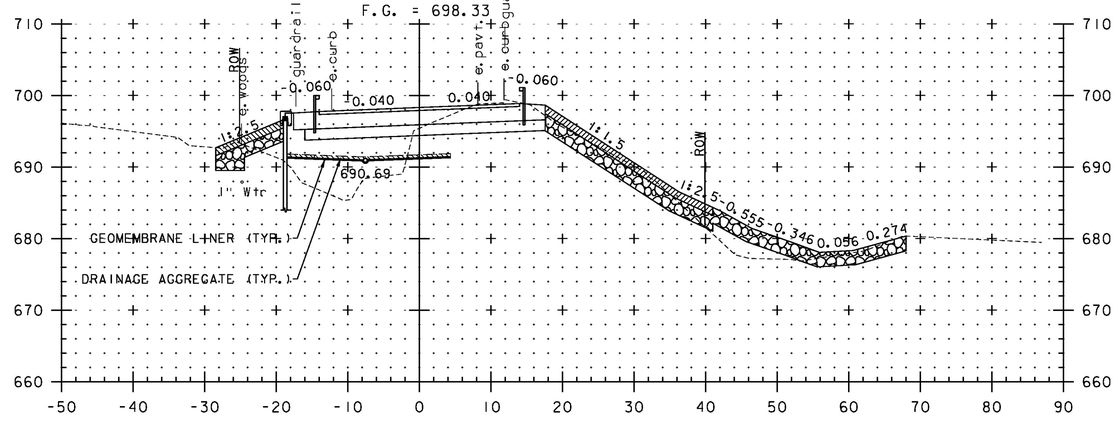

62+25

STA. 62+00 TO STA. 62+50

0 10 20
(SCALE 1" = 10')

CONSULTING ENGINEERS

PROJECT NAME: ST. JOHNSBURY	
PROJECT NUMBER: BF 7000(20)	
FILE NAME: 86e048/cos/z86e048xs.dgn	PLOT DATE: 10/26/2016
PROJECT LEADER: J. BYATT	DRAWN BY: M. HALEY
DESIGNED BY: M. HALEY	CHECKED BY: P.SHEDD
VT 2B CROSS SECTIONS 2	SHEET 54 OF 70

CLD 14-0116 MODEL: MAINLINE XS02

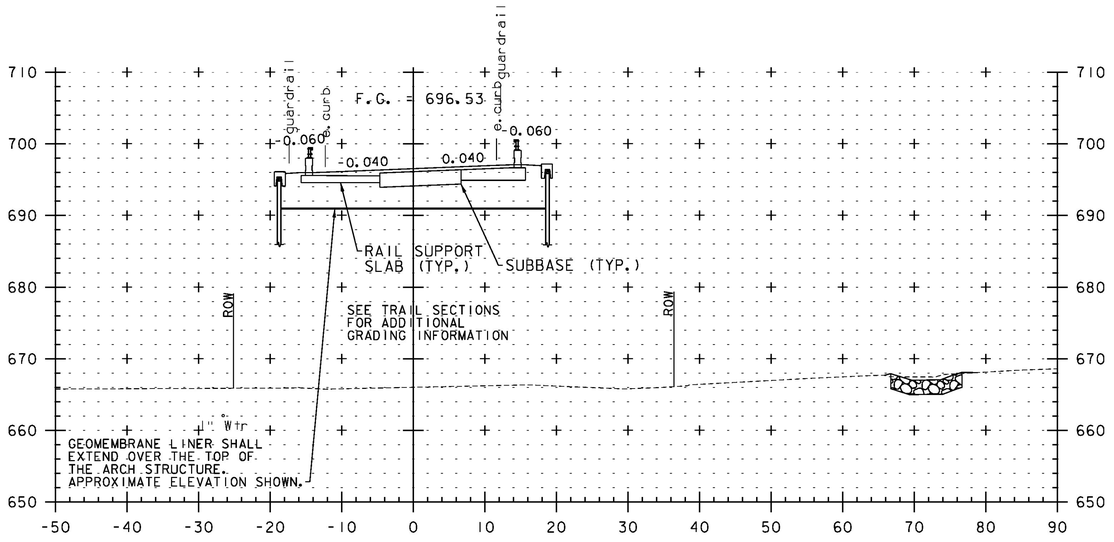

62+75

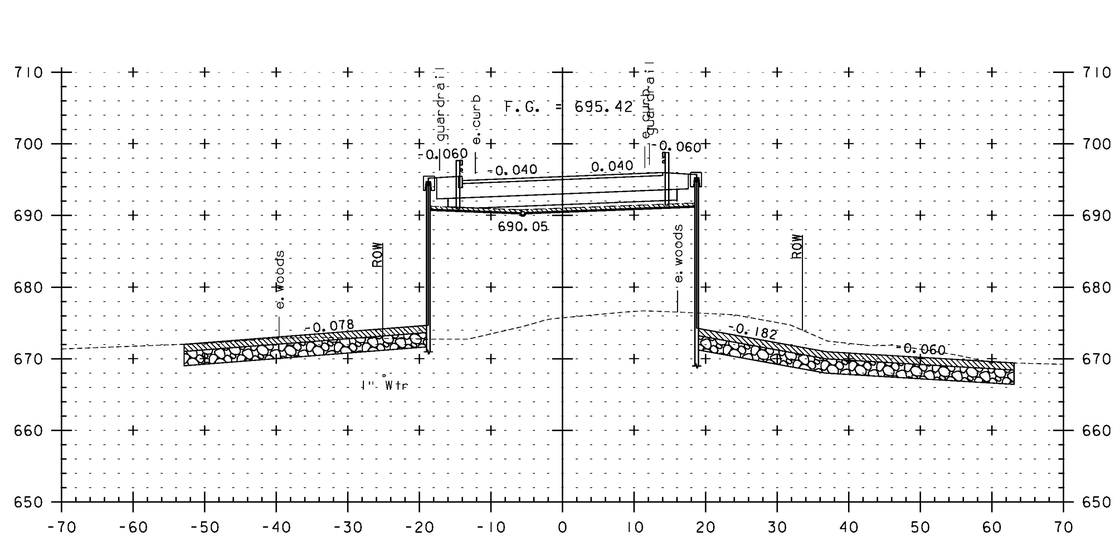

63+11.16
END BRIDGE

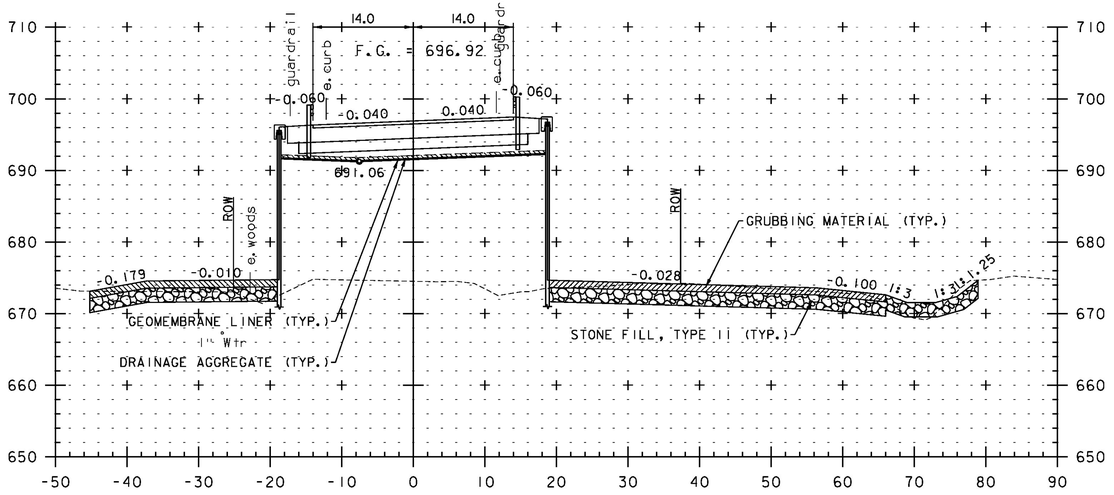

62+63.21
BEGIN BRIDGE

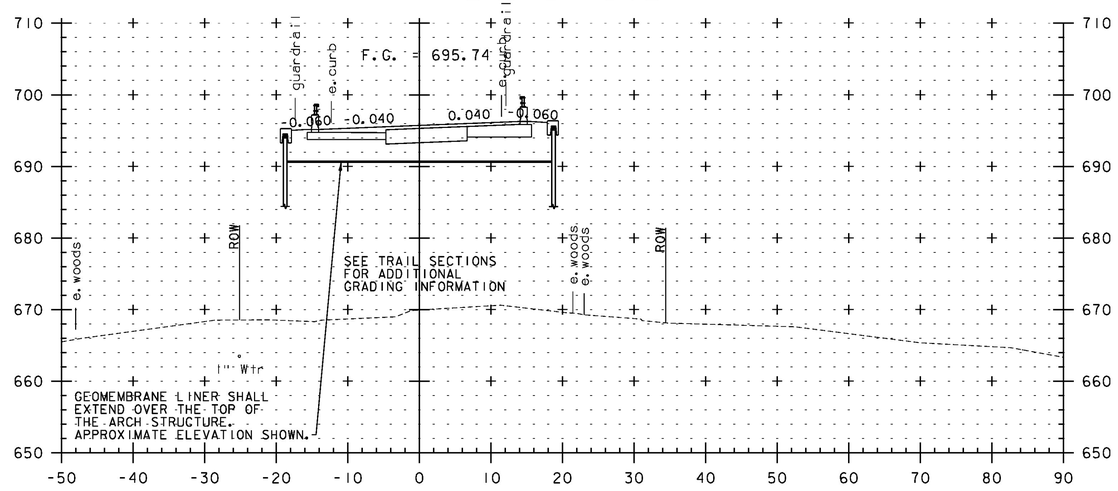

63+00

STA. 62+63.21 TO STA. 63+11.16

0 10 20
(SCALE 1" = 10')

CONSULTING ENGINEERS

PROJECT NAME:	ST. JOHNSBURY
PROJECT NUMBER:	BF 7000(20)
FILE NAME: 86e048/cos/z86e048xs.dgn	PLOT DATE: 10/27/2016
PROJECT LEADER: J. BYATT	DRAWN BY: M. HALEY
DESIGNED BY: M. HALEY	CHECKED BY: P.SHEDD
VT 2B CROSS SECTIONS 3	SHEET 55 OF 70

CLD 14-016 MODEL: MAINLINE XS03

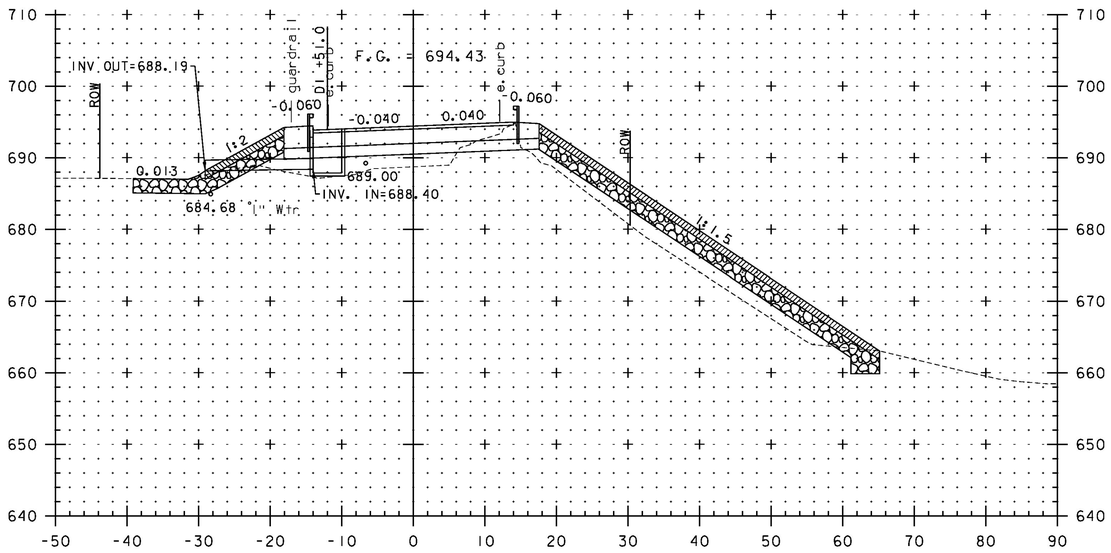

63+50

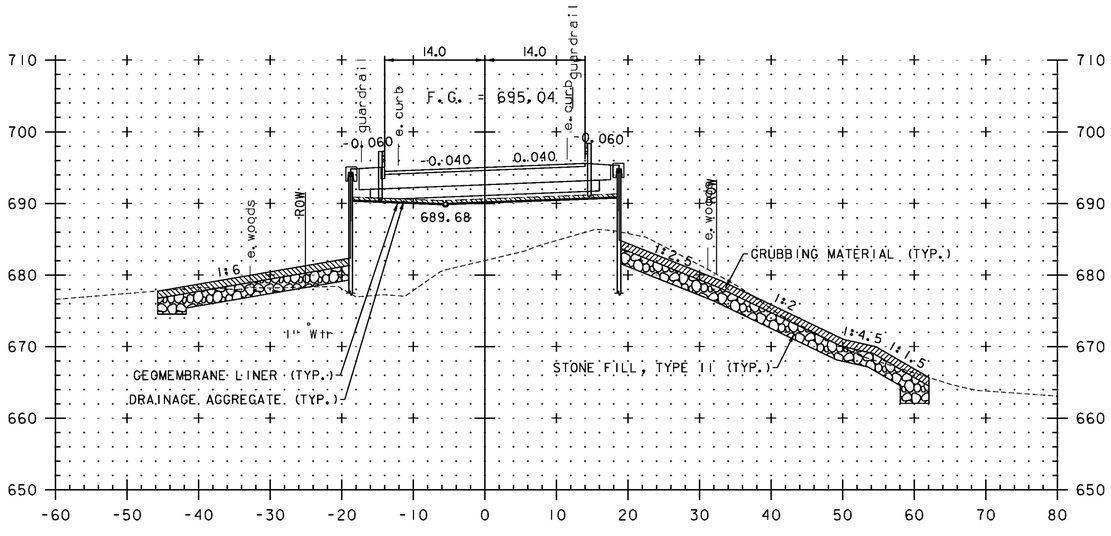

63+25

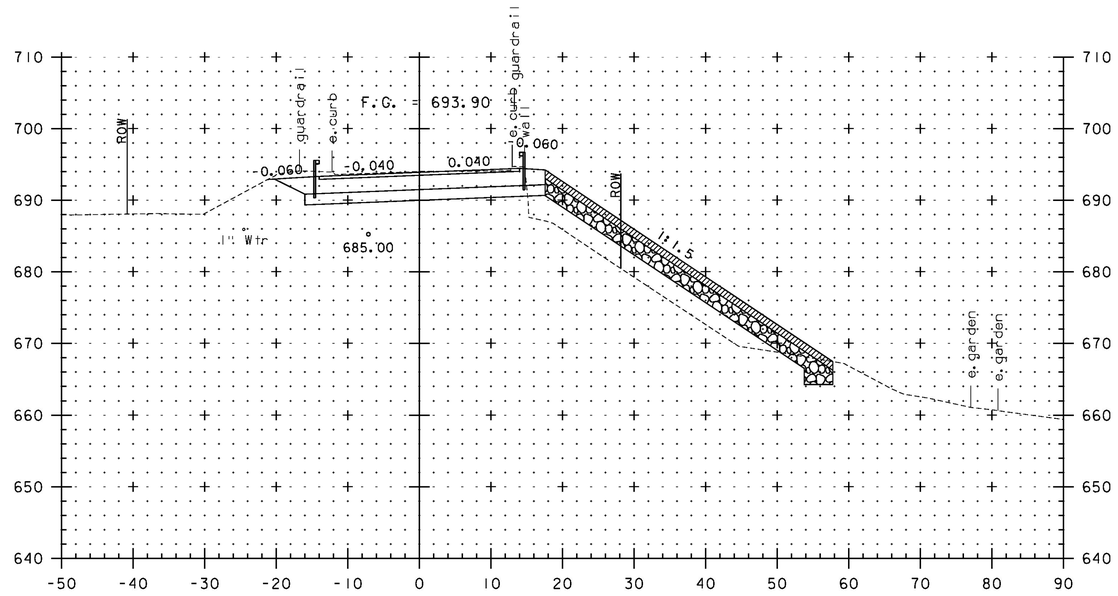

63+75

END PROJECT

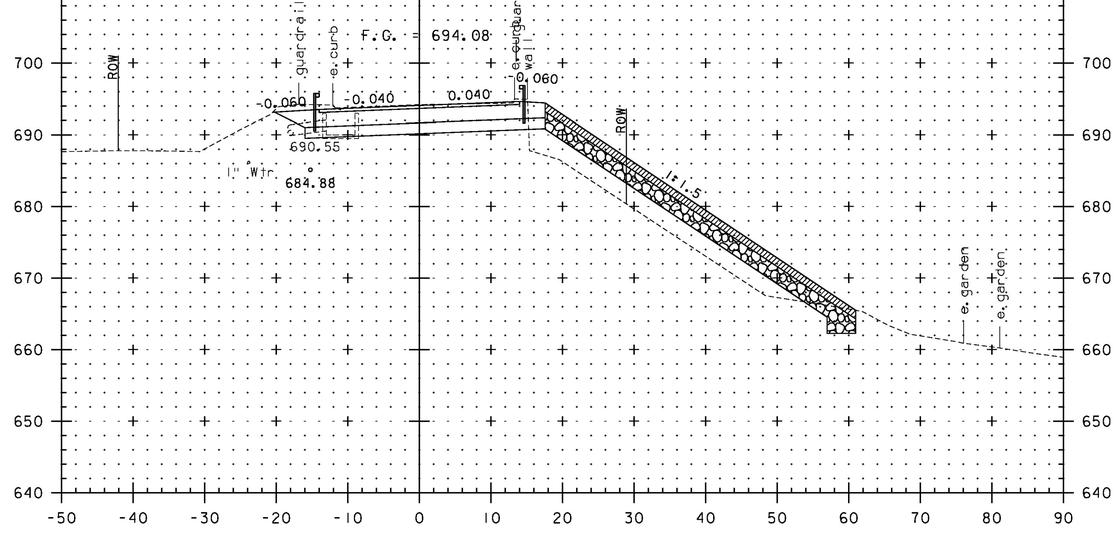

63+66

STA. 63+25 TO STA. 63+75

0 10 20
(SCALE 1" = 10')

CONSULTING ENGINEERS

PROJECT NAME: ST. JOHNSBURY	
PROJECT NUMBER: BF 7000(20)	
FILE NAME: 86e048/cos/z86e048xs.dgn	PLOT DATE: 10/26/2016
PROJECT LEADER: J. BYATT	DRAWN BY: M. HALEY
DESIGNED BY: M. HALEY	CHECKED BY: P.SHEDD
VT 2B CROSS SECTIONS 4	SHEET 56 OF 70

CLD 14-0116 MODEL: MAINLINE XS04

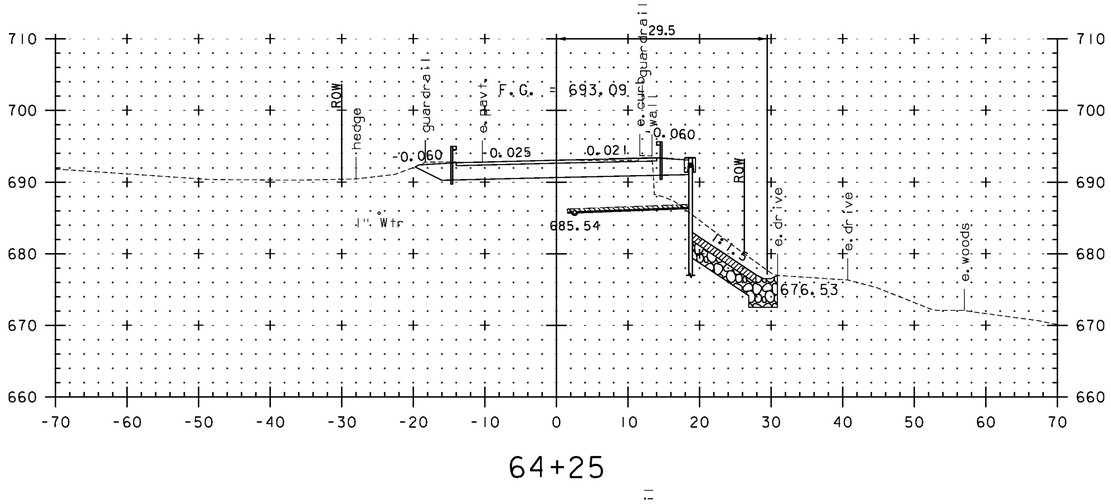

64+25

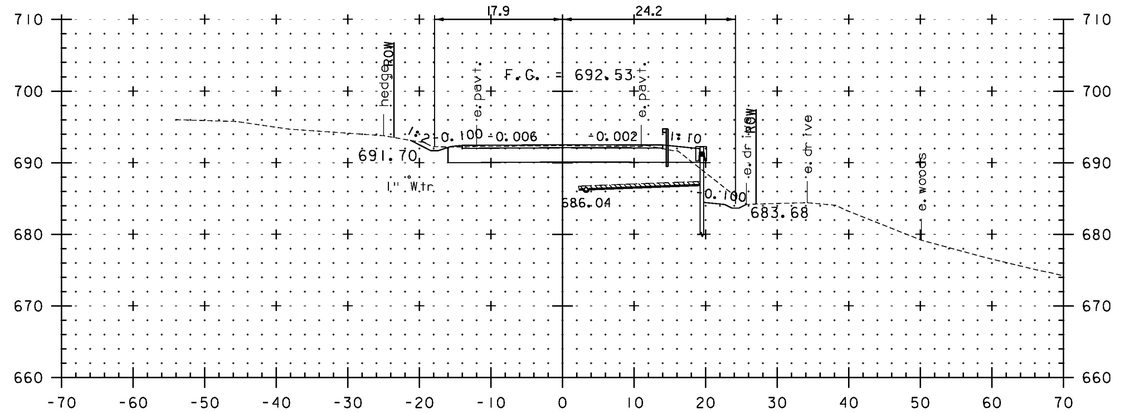

64+75

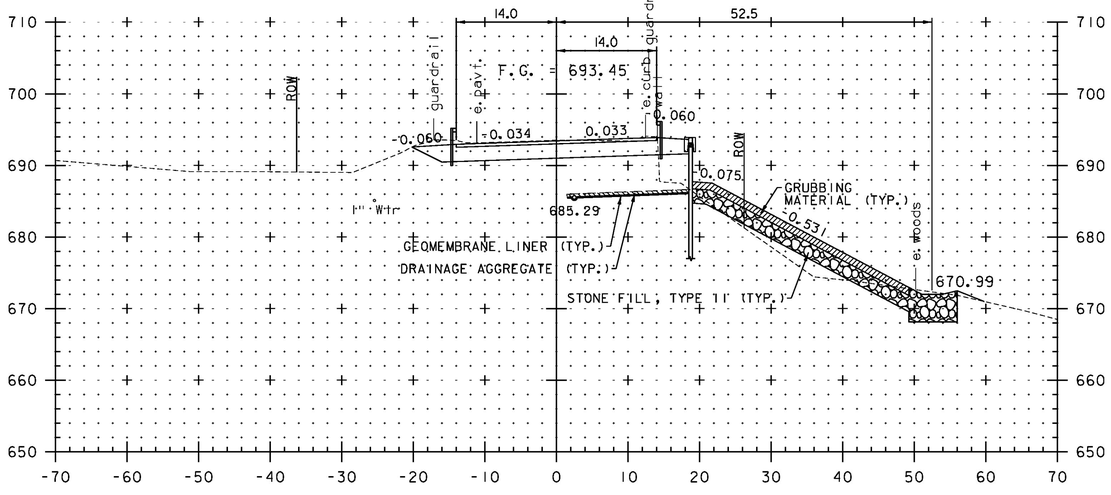

64+00

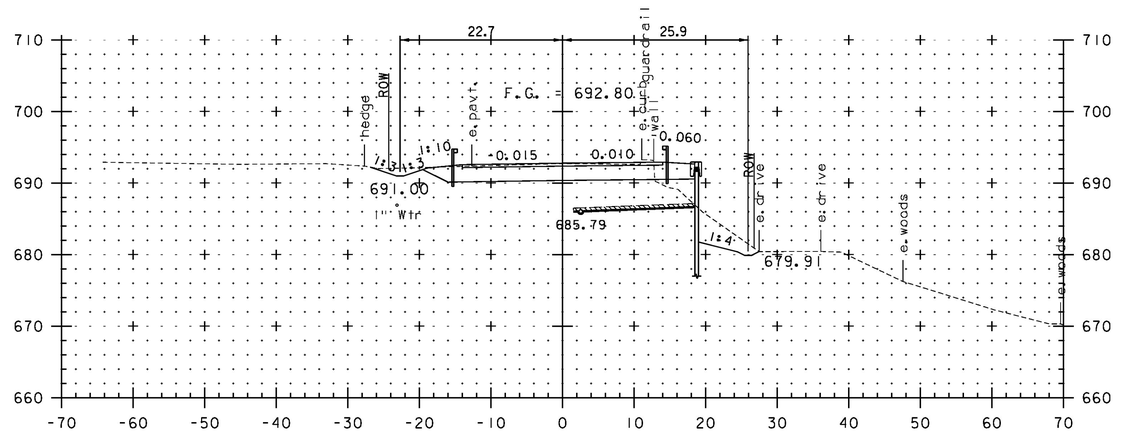

64+50

STA. 64+00 TO STA. 64+75

0 10 20
(SCALE 1" = 10')

CONSULTING ENGINEERS

PROJECT NAME:	ST. JOHNSBURY
PROJECT NUMBER:	BF 7000(20)
FILE NAME: 86e048/cos/z86e048xs.dgn	PLOT DATE: 10/26/2016
PROJECT LEADER: J. BYATT	DRAWN BY: M. HALEY
DESIGNED BY: M. HALEY	CHECKED BY: P.SHEDD
VT 2B CROSS SECTIONS 5	SHEET 57 OF 70

CLD 14-0116 MODEL: MAINLINE XS05

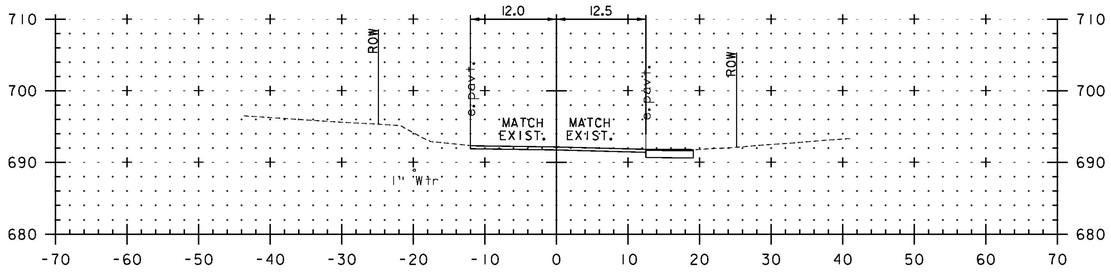

65+46
DRIVE RT

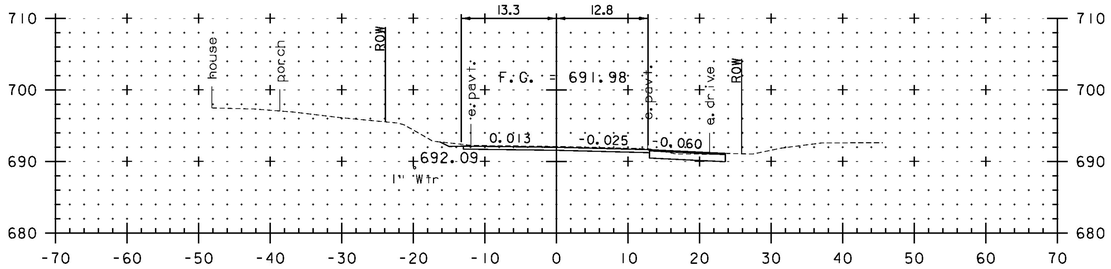

65+25
DRIVE RT

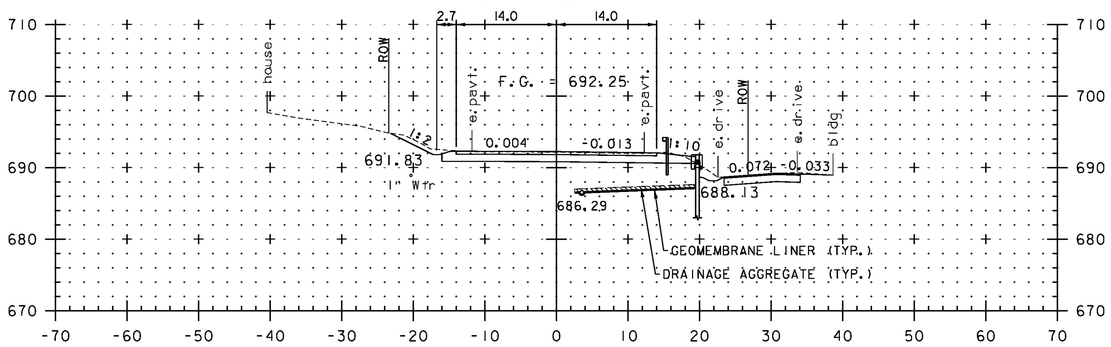

65+00

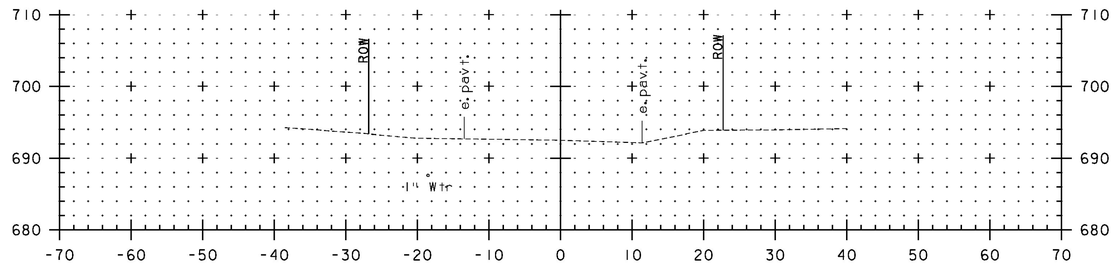

66+00

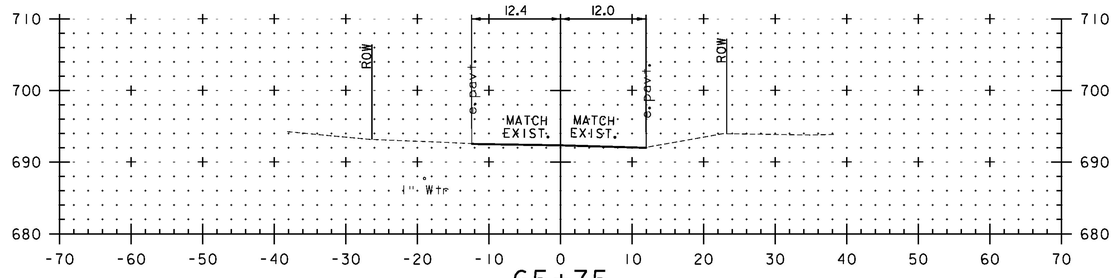

65+75
DRIVE LT
END APPROACH

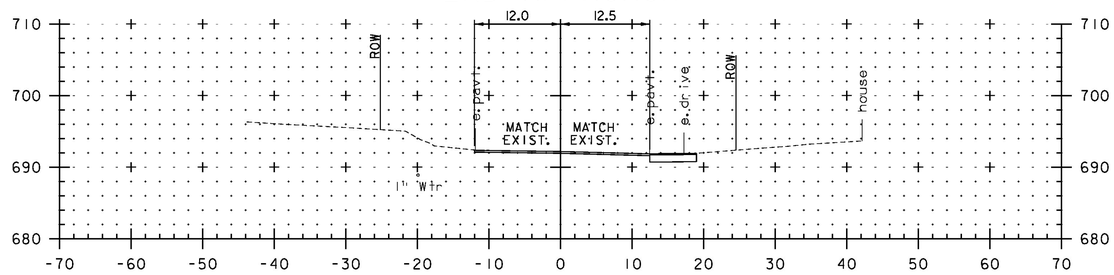

65+50

STA. 65+00 TO STA. 66+00

0 10 20
(SCALE 1" = 10')

CONSULTING ENGINEERS

PROJECT NAME:	ST. JOHNSBURY
PROJECT NUMBER:	BF 7000(20)
FILE NAME: 86e048/cos/z86e048xs.dgn	PLOT DATE: 10/26/2016
PROJECT LEADER: J. BYATT	DRAWN BY: M. HALEY
DESIGNED BY: M. HALEY	CHECKED BY: P.SHEDD
VT 2B CROSS SECTIONS 6	SHEET 58 OF 70

CLD 14-0116 MODEL: MAINLINE XS06

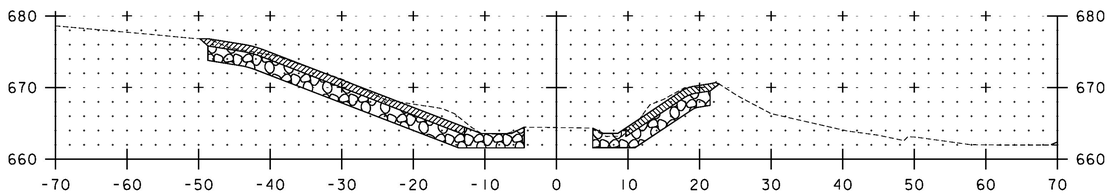

78+90

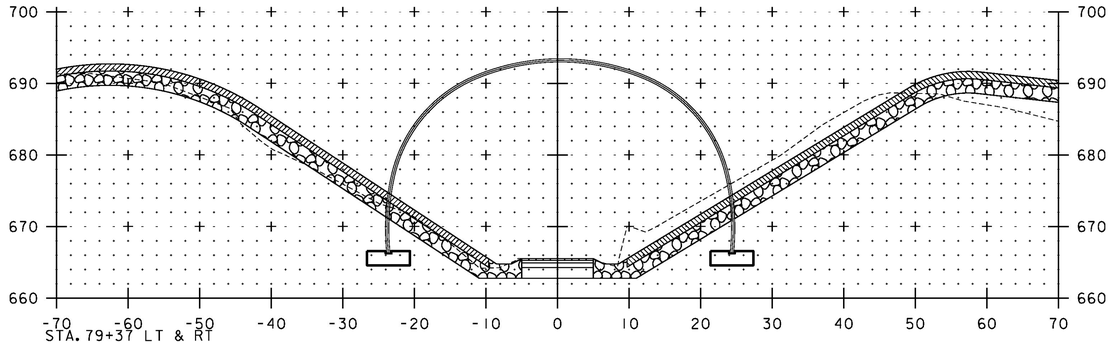

STA. 79+37 LT & RT
BEGIN STRUCTURAL LUMBER AND TIMBER, TREATED
STOP SPECIAL PROVISION (AGGREGATE
SURFACE COURSE, SIDEWALK/TRAIL)

79+41.21
BEGIN ARCH

STA. 79+41.21 LT & RT
STOP COMMON EXCAVATION
GRUBBING MATERIAL

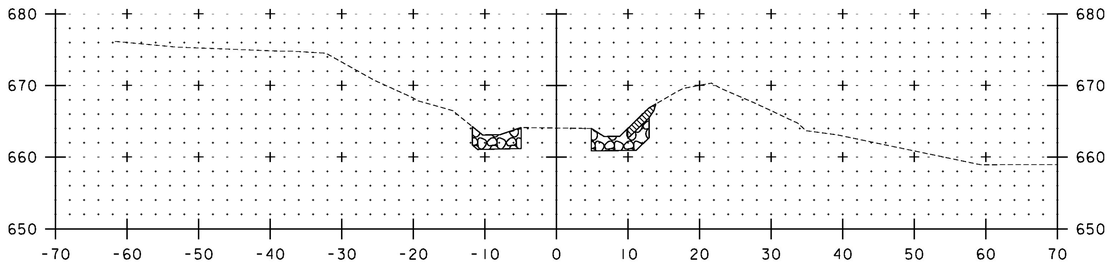

STA. 78+75 LT & RT
BEGIN COMMON EXCAVATION
GEOTEXTILE UNDER STONE FILL
STONE FILL, TYPE II
GRUBBING MATERIAL

78+75

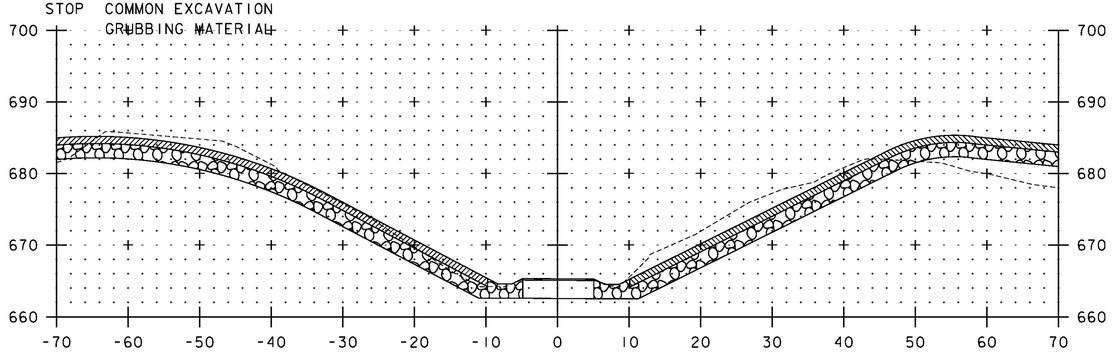

STA. 79+25 LT & RT
BEGIN SPECIAL PROVISION (AGGREGATE
SURFACE COURSE, SIDEWALK/TRAIL)
GRANULAR BORROW

79+30

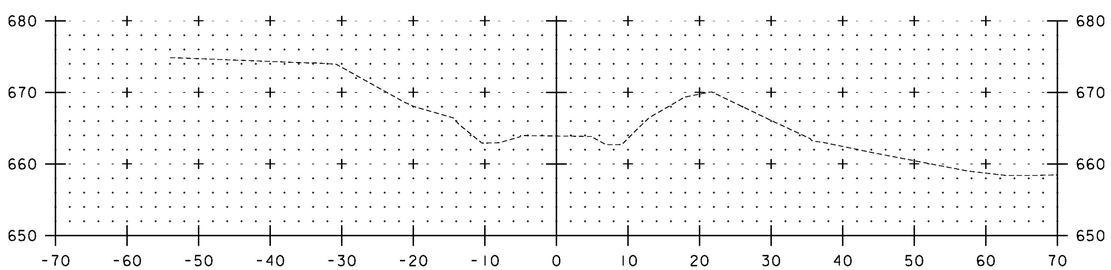

78+70

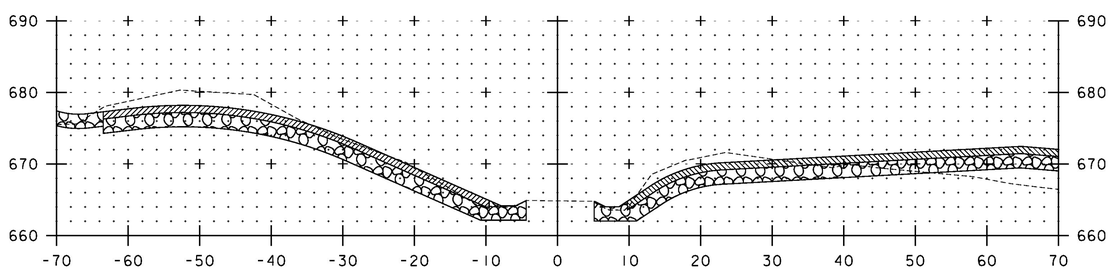

79+10

STA. 78+70 TO STA. 79+41.17

0 10 20
(SCALE 1" = 10')

CONSULTING ENGINEERS

PROJECT NAME: ST. JOHNSBURY
PROJECT NUMBER: BF 7000(20)

FILE NAME: 86e048/cos/z86e048xstrail.dgn PLOT DATE: 10/26/2016
PROJECT LEADER: J. BYATT DRAWN BY: M. SMITH
DESIGNED BY: S. BEAUMONT CHECKED BY: J. BYATT
TRAIL CROSS SECTIONS 1 SHEET 59 OF 70

CLD 14-0116 MODEL: Sheet01

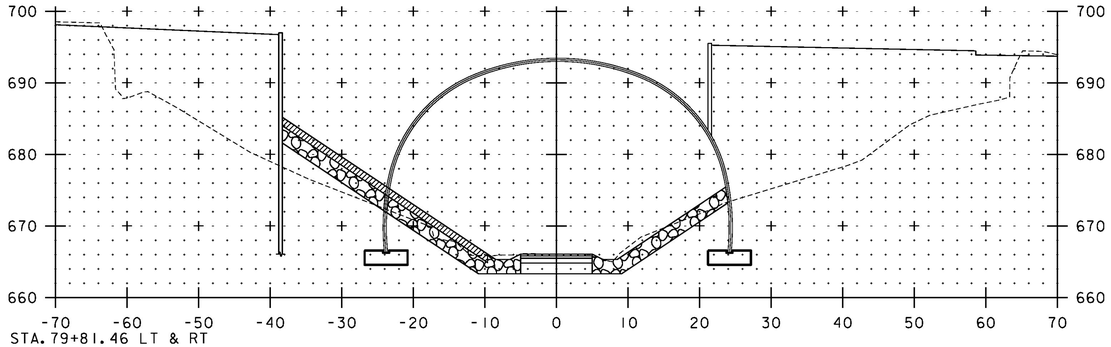

STA. 79+81.46 LT & RT
RESUME COMMON EXCAVATION
GRUBBING MATERIAL

79+81.46
END ARCH

STA 79+85.67 LT & RT
END STRUCTURAL LUMBER AND TIMBER, TREATED
RESUME SPECIAL PROVISION (AGGREGATE SURFACE COURSE, SIDEWALK/TRAIL)

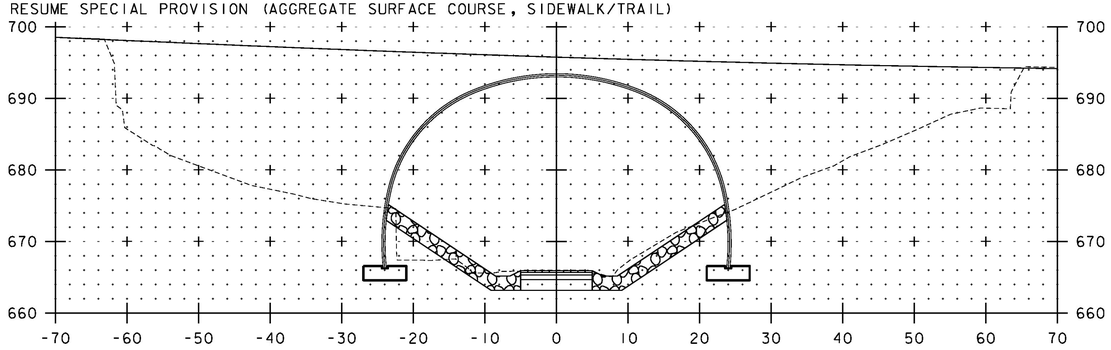

79+70

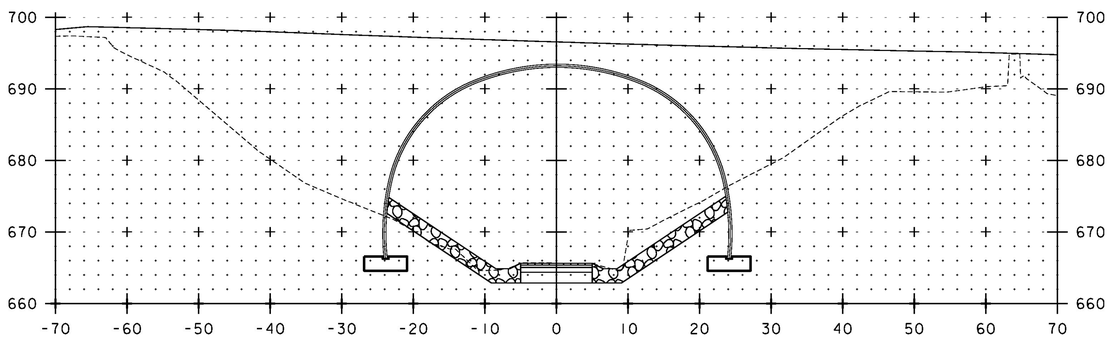

79+50

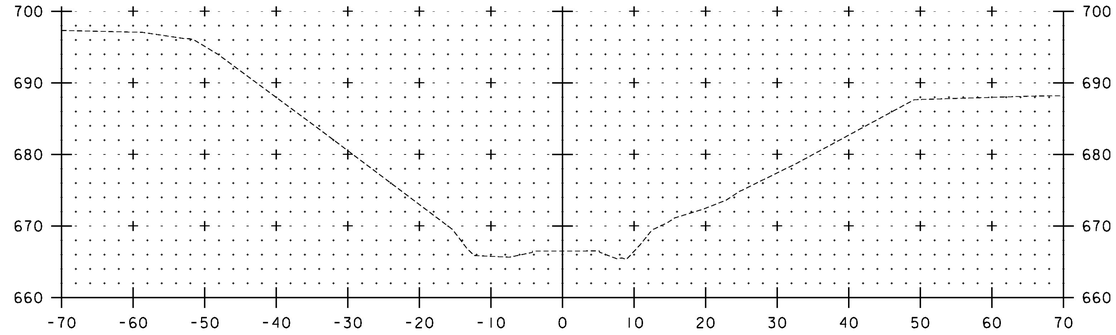

STA. 80+16 RT
END COMMON EXCAVATION
GEOTEXTILE UNDER STONE FILL
STONE FILL, TYPE II
GRUBBING MATERIAL

80+30

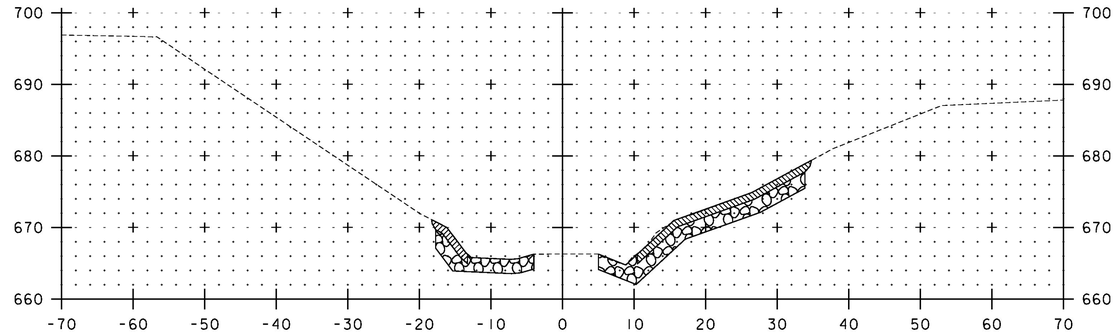

STA. 80+10 LT
END COMMON EXCAVATION
GEOTEXTILE UNDER STONE FILL
STONE FILL, TYPE II
GRUBBING MATERIAL

80+10

STA 80+00 LT & RT
END GRANULAR BORROW
END SPECIAL PROVISION (AGGREGATE SURFACE COURSE, SIDEWALK/TRAIL)

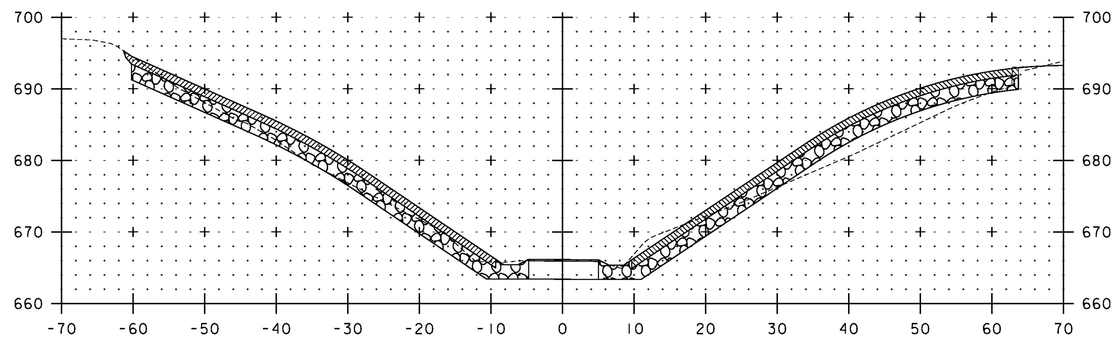

79+90

STA. 79+50 TO STA. 80+30

0 10 20
(SCALE 1" = 10')

CONSULTING ENGINEERS

PROJECT NAME: ST. JOHNSBURY
PROJECT NUMBER: BF 7000(20)

FILE NAME: 86e048/cos/z86e048xstrail.dgn PLOT DATE: 10/26/2016
PROJECT LEADER: J. BYATT DRAWN BY: M. SMITH
DESIGNED BY: S. BEAUMONT CHECKED BY: J. BYATT
TRAIL CROSS SECTIONS 2 SHEET 60 OF 70

CLD 14-0116 MODEL: Sheet02

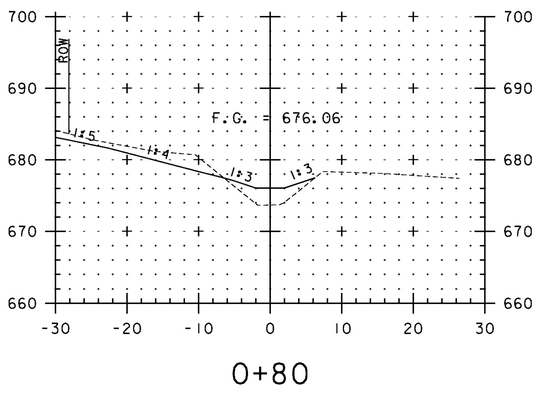

0+80

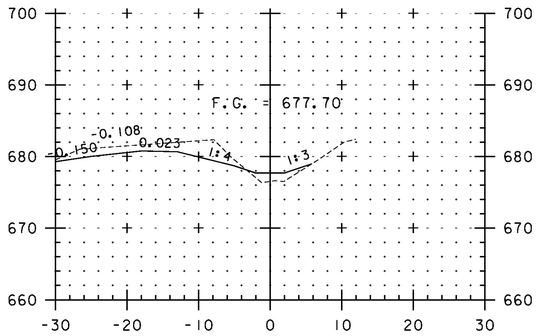

0+60

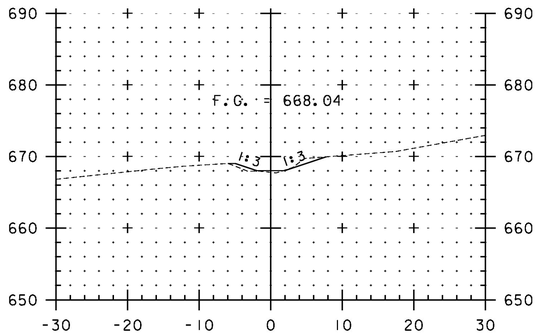

1+20

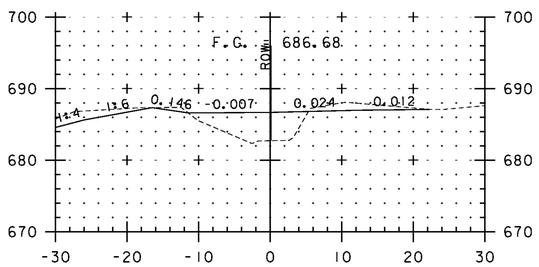

0+40

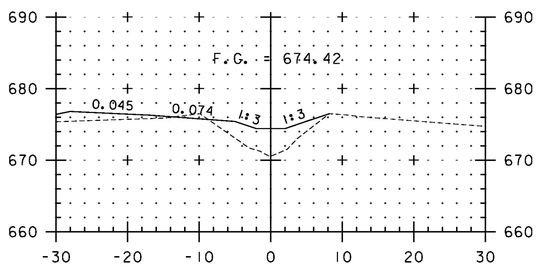

1+00

DITCH HORIZONTAL ALIGNMENT

		STATION	NORTHING	EASTING
Element: Linear				
POB (36)		0+00.00	700865.4782	1761587.5159
POB (36)		0+00.00 =	VT 2B STA 62+10.00	
PI (37)		0+16.98	700849.5961	1761581.5145
Tangent Direction:	S 20°42'00.17" W			
Tangent Length:	16.98			
Element: Linear				
PI (37)		0+16.98	700849.5961	1761581.5145
PI (38)		0+32.31	700834.2628	1761581.5145
Tangent Direction:	S 0°00'00.00" E			
Tangent Length:	15.33			
Element: Linear				
PI (38)		0+32.31	700834.2628	1761581.5145
PI (39)		0+40.94	700825.6431	1761581.1112
Tangent Direction:	S 2°40'44.19" W			
Tangent Length:	8.63			
Element: Linear				
PI (39)		0+40.94	700825.6431	1761581.1112
PI (40)		0+56.25	700811.4244	1761586.7797
Tangent Direction:	S 21°44'07.32" E			
Tangent Length:	15.31			
Element: Linear				
PI (40)		0+56.25	700811.4244	1761586.7797
PI (41)		0+69.51	700798.2038	1761587.8857
Tangent Direction:	S 4°46'55.43" E			
Tangent Length:	13.27			
Element: Linear				
PI (41)		0+69.51	700798.2038	1761587.8857
PI (42)		0+76.90	700792.9673	1761593.0987
Tangent Direction:	S 44°52'16.14" E			
Tangent Length:	7.39			
Element: Linear				
PI (42)		0+76.90	700792.9673	1761593.0987
PI (43)		1+00.84	700783.1341	1761614.9265
Tangent Direction:	S 65°44'55.62" E			
Tangent Length:	23.94			
Element: Linear				
PI (43)		1+00.84	700783.1341	1761614.9265
PI (30)		1+22.23	700777.2533	1761635.4875
Tangent Direction:	S 74°02'19.52" E			
Tangent Length:	21.39			
Element: Linear				
PI (30)		1+22.23	700777.2533	1761635.4875
POE (24)		1+39.23	700776.4912	1761652.4704
POE (24)		1+39.23 =	LVRT STA 78+91.00	
Tangent Direction:	S 87°25'49.49" E			
Tangent Length:	17.00			

DITCH VERTICAL ALIGNMENT

	STATION	ELEVATION
Element: Linear		
POB	0+30.80	690.82
PVI	0+60.00	677.70
Tangent Grade:	-44.91%	
Tangent Length:	29.20	
Element: Linear		
PVI	0+60.00	677.70
PVI	1+00.00	674.42
Tangent Grade:	-8.20%	
Tangent Length:	40.00	
Element: Linear		
PVI	1+00.00	674.42
POE	1+25.00	666.44
Tangent Grade:	-31.91%	
Tangent Length:	25.00	

STA. 0+40 TO STA. 1+20

0 10 20
(SCALE 1" = 10')

CONSULTING ENGINEERS

PROJECT NAME: ST. JOHNSBURY
PROJECT NUMBER: BF 7000(20)

FILE NAME: 86e048/cos/z86e048xs.dgn
PROJECT LEADER: J. BYATT
DESIGNED BY: M. HALEY
STONE LINED DITCH CROSS SECTIONS SHEET

PLOT DATE: 10/26/2016
DRAWN BY: M. HALEY
CHECKED BY: P.SHEDD
SHEET 61 OF 70

CLD 14-0116 MODEL: DITCH XS01

EPSC PLAN NARRATIVE

1.1 PROJECT DESCRIPTION

THIS PROJECT INVOLVES THE REMOVAL OF BRIDGE 6, ITS ABUTMENTS, PIERS, AND FOUNDATIONS, AND THE REPLACEMENT OF A RETAINING WALL SOUTHEAST OF THE EXISTING BRIDGE. BRIDGE 6 WILL BE REPLACED WITH A BURIED GALVANIZED STEEL STRUCTURAL PLATE ARCH STRUCTURE WITH A 26.75 FOOT RISE AND 47.92 FOOT MAXIMUM SPAN OVER THE LAMOILLE VALLEY RAIL TRAIL ALONG THE SAME ALIGNMENT AS THE EXISTING BRIDGE. THE HEADWALLS AND WINGWALLS WILL CONSIST OF U-BACK MECHANICALLY STABILIZED EARTH RETAINING WALLS. THE RETAINING WALL WILL BE REMOVED AND REPLACED WITH A 113.41 FOOT WALL ADJACENT TO THE DRIVE AT STA 65+25 RT. BRIDGE 6 IS LOCATED IN THE TOWN OF ST. JOHNSBURY, ON VT ROUTE 2B, APPROXIMATELY 0.35 MILES WEST OF THE INTERSECTION OF US ROUTE 2 AND VT ROUTE 2B. ROADWAY TYPICAL SECTION WILL BE TWO 11 FOOT LANES AND TWO 3 FOOT SHOULDERS.

NOTE: AREA OF DISTURBANCE INCLUDES LIMITS OF EARTH DISTURBANCE WITHIN THE PROJECT AREA, AS WELL AS WASTE, BORROW AND STAGING AREAS, AND OTHER EARTH DISTURBING ACTIVITIES WITHIN OR DIRECTLY ADJACENT TO THE PROJECT LIMITS AS SHOWN ON THE ATTACHED EPSC PLAN.

TOTAL AREA OF DISTURBANCE AS SHOWN ON THE ATTACHED EPSC PLAN IS APPROXIMATELY 0.79 ACRES.

IT IS ANTICIPATED THAT THIS PROJECT WILL LAST ONE CONSTRUCTION SEASON UTILIZING THE ACCELERATED BRIDGE CONSTRUCTION PROGRAM.

1.2 SITE INVENTORY

1.2.1 TOPOGRAPHY

THE TOPOGRAPHY OF THE AREA IS HILLY WITH MOSTLY WOODED AREAS WITH OCCASIONAL MAINTAINED LAWN AREAS. VT ROUTE 2B AND MULTIPLE DRIVEWAYS ARE WITHIN THE PROJECT SITE. THERE ARE TWO RESIDENCES ON THE NORTH, AND THREE RESIDENCES ON THE SOUTH WITHIN THE PROJECT LIMITS. THE LAMOILLE VALLEY RAIL TRAIL CROSSES UNDER VT ROUTE 2B. THE RAIL TRAIL IS PRIMARILIY GRASS WITH WOODED AREAS ALONG THE EAST AND WEST SIDES.

1.2.2 DRAINAGE, WATERWAYS, BODIES OF WATER, AND PROXIMITY TO NATURAL OR MAN-MADE WATER FEATURES

THE ONLY OPEN WATER SOURCE NEAR THE PROJECT SITE IS A SMALL, UNNAMED POND APPROXIMATELY 200 FEET NORTH OF BRIDGE 6 ON THE WEST SIDE OF THE RAIL TRAIL. A MUNICIPAL WATER LINE IS LOCATED ON THE NORTH SIDE OF VT 2B WITHIN THE PROJECT LIMITS. AN UNNAMED TRIBUTARY TO THE SLEEPER'S RIVER IS LOCATED APPROXIMATELY 550 FEET SOUTH OF BRIDGE 6. THERE ARE TWO DROP INLETS ON SITE DRAINING FROM THE ROADWAY TO THE RAIL TRAIL.

1.2.3 VEGETATION

THE VEGETATION IN THE PROJECT AREA CONSISTS OF HARDWOOD TREES, UNDERGROWTH AND MAINTAINED LAWN AREAS. THE IMPACT TO VEGETATION WILL BE LIMITED TO THAT WHICH IS DIRECTLY AFFECTED BY REPLACEMENT OF THE EXISTING BRIDGE, RETAINING WALL, AND SLOPE GRADING. DISTURBED VEGETATION THAT DOES NOT RECEIVE STONE FILL WILL BE REESTABLISHED WITH STANDARD SEED AND MULCH PRACTICES.

1.2.4 SOILS

ALL SOIL DATA CAME FROM THE U.S. DEPARTMENT OF AGRICULTURE SOIL CONSERVATION SERVICE FOR THE COUNTY OF CALEDONIA, VERMONT. SOILS ON THE PROJECT SITE ARE SALMON-ADAMANT COMPLEX, 15% TO 25% SLOPES, VERY ROCKY, AND SALMON-ADAMANT COMPLEX, 25% TO 50% SLOPES, VERY ROCKY, "K FACTOR" = 0.64. THE SOIL IS CONSIDERED HIGHLY ERODIBLE DUE TO SIGNIFICANT SLOPES.

NOTE: K-VALUES GENERALLY INDICATE THE FOLLOWING:
0.0-0.23 = LOW EROSION POTENTIAL
0.24-0.36 = MODERATE EROSION POTENTIAL
0.37 AND HIGHER = HIGH EROSION POTENTIAL

1.2.5 SENSITIVE RESOURCE AREAS

CRITICAL HABITATS: NO.
HISTORICAL OR ARCHEOLOGICAL AREAS: YES. THE PROJECT IS LOCATED WITHIN A HISTORIC DISTRICT. BRIDGE 6 IS CONSIDERED HISTORIC.
PRIME AGRICULTURAL LAND: NO
THREATENED AND ENDANGERED SPECIES: NORTHERN LONG-EARED BAT AND LITTLE BROWN BAT. SEE SPECIAL PROVISIONS FOR ADDITIONAL INFORMATION AND RESTRICTIONS RELATED TO IMPACTS TO HABITAT.
WATER RESOURCE: NO
WETLANDS: NO

THERE ARE 4(f) PROPERTIES LOCATED NEAR THE PROJECT SITE.

1.3 RISK EVALUATION

THIS PROJECT DOES NOT FALL UNDER THE JURISDICTION OF GENERAL PERMIT 3-9020 FOR STORMWATER RUNOFF FROM CONSTRUCTION SITES. SHOULD CHANGES PRIOR TO OR DURING CONSTRUCTION RESULT IN ONE OR MORE ACRES OF EARTH DISTURBANCE OR SHOULD THE PROJECT BECOME PART OF A LARGER PLAN OF DEVELOPMENT, THE CONTRACTOR WILL BE RESPONSIBLE FOR ANY ADDITIONAL PERMITTING.

1.4 EROSION PREVENTION AND SEDIMENT CONTROL

THE EROSION CONTROL PLANS ARE MEANT AS A GUIDELINE FOR PREVENTING EROSION AND CONTROLLING SEDIMENT TRANSPORT. THE PRINCIPLES OUTLINED IN THIS NARRATIVE CONSIST OF APPLYING MEASURES THROUGHOUT CONSTRUCTION OF THE PROJECT IN ORDER TO MINIMIZE SEDIMENT TRANSPORT TO THE RECEIVING WATERS. THE MEASURES INCLUDE STABILIZATION AND STRUCTURAL PRACTICES, STORM WATER CONTROLS AND OTHER POLLUTION PREVENTION PRACTICES. THEY HAVE BEEN PROPOSED BY THE DESIGNER AS A BASIS FOR PROTECTING RESOURCES AND WILL NEED TO BE BUILT UPON BASED ON THE SPECIFIC MEANS AND METHODS OF THE CONTRACTOR. REFER TO THE LOW RISK SITE HANDBOOK AND APPROPRIATE DETAIL SHEETS FOR SPECIFIC GUIDANCE AND CONSTRUCTION DETAILING.

ALL MEASURES SHALL BE REGULARLY MAINTAINED AND SHALL BE CHECKED FOR SEDIMENT BUILD-UP. SEDIMENT SHALL BE DISPOSED OF AT AN APPROVED SITE WHERE IT WILL NOT BE SUBJECT TO EROSION.

1.4.1 MARK SITE BOUNDARIES

SITE BOUNDARIES AND AREAS CONSTRUCTION EQUIPMENT CAN ACCESS SHALL BE DELINEATED.

PROJECT DEMARCATION FENCING (PDF) SHALL BE USED TO PHYSICALLY MARK SITE BOUNDARIES.

1.4.2 LIMIT DISTURBANCE AREA

PREVENTING INITIAL SOIL EROSION BY MINIMIZING THE EXPOSED AREA IS MUCH MORE EFFECTIVE THAN TREATING ERODED SEDIMENT. EARTH DISTURBANCE CAN BE MINIMIZED THROUGH CONSTRUCTION PHASING BY ONLY OPENING UP EARTH AS NECESSARY. THIS CAN LIMIT THE AREA THAT WILL BE DISTURBED AND EXPOSED TO EROSION. EMPLOY TEMPORARY CONSTRUCTION STABILIZATION PRACTICES IN INCREMENTAL STAGES AS PHASES CHANGE. FOR PROJECTS WHICH FALL UNDER THE CONSTRUCTION GENERAL PERMIT, ONLY THE ACREAGE LISTED ON THE PERMIT AUTHORIZATION MAY BE EXPOSED AT ANY GIVEN TIME.

MAINTAINING VEGETATED BUFFERS ALONG STREAM BANKS, WETLANDS OR OTHER SENSITIVE AREAS IS A CRUCIAL EROSION AND SEDIMENT CONTROL MEASURE THAT SHOULD BE ESTABLISHED WHEREVER POSSIBLE.

1.4.3 SITE ENTRANCE/EXIT STABILIZATION

TRACKING OF SEDIMENT ONTO PUBLIC HIGHWAYS SHALL BE MINIMIZED TO REDUCE THE POTENTIAL FOR RUNOFF ENTERING RECEIVING WATERS. INSTALLATION SHALL COINCIDE WITH THE CONTRACTOR'S PROGRESS SCHEDULE.

STABILIZED CONSTRUCTION ENTRANCES ARE ANTICIPATED. THE EXISTING ROADWAY WILL BE CLOSED TO ALL TRAFFIC AND WILL BE UTILIZED TO ACCESS THE BRIDGE. STABILIZED CONSTRUCTION ENTRANCES SHALL BE INSTALLED FOR ANY EQUIPMENT THAT ACCESSES AND UTILIZES THE RAIL TRAIL DURING CONSTRUCTION. THE CONTRACTOR SHALL ENSURE THAT ANY EQUIPMENT THAT UTILIZES THE RAIL TRAIL DURING CONSTRUCTION IS CLEAR OF SEDIMENT PRIOR TO ENTERING THE PAVED ROADWAY.

1.4.4 INSTALL SEDIMENT BARRIERS

SEDIMENT BARRIERS SHALL BE UTILIZED TO INTERCEPT RUNOFF AND ALLOW SUSPENDED SEDIMENT TO SETTLE OUT. THEY SHALL BE INSTALLED PRIOR TO ANY UP SLOPE WORK.

SILT FENCE AND STONE AND BLOCK DROP INLET PROTECTION MEASURES WILL BE INSTALLED AS PROPOSED ON THE EPSC PLAN.

1.4.5 DIVERT UPLAND RUNOFF

DIVERSIONARY MEASURES SHALL BE USED TO INTERCEPT RUNOFF FROM ABOVE THE CONSTRUCTION AND DIRECT IT AROUND THE DISTURBED AREA SO THAT CLEAN WATER DOES NOT BECOME MUDDIED WHILE TRAVELING OVER EXPOSED SOILS ON THE CONSTRUCTION SITE.

DIVERSION MEASURES ARE NOT ANTICIPATED TO BE NEEDED AS DESIGNED.

1.4.6 SLOW DOWN CHANNELIZED RUNOFF

CHECK STRUCTURES SHALL BE UTILIZED TO REDUCE THE VELOCITY, AND THUS THE EROSIVE POTENTIAL, OF CONCENTRATED FLOW IN CHANNELS.

TEMPORARY STONE CHECK DAMS WILL BE INSTALLED AS PROPOSED ON THE EPSC PLAN, AT A MINIMUM.

1.4.7 CONSTRUCT PERMANENT CONTROLS

PERMANENT STORMWATER TREATMENT DEVICES SHALL BE INSTALLED AS SHOWN ON THE PLANS AND IN ACCORDANCE WITH PERMIT CONDITIONS.

PERMANENT STORMWATER TREATMENT DEVICES ARE NOT ANTICIPATED TO BE NEEDED AS DESIGNED.

1.4.8 STABILIZE EXPOSED SOILS DURING CONSTRUCTION

ALL AREAS OF DISTURBANCE MUST HAVE TEMPORARY STABILIZATION IN PLACE WITHIN 48 HOURS OF DISTURBANCE OR IN ACCORDANCE WITH THE CONSTRUCTION GENERAL PERMIT 3-9020 AUTHORIZATION.

SURFACE ROUGHENING OF ALL EXPOSED SLOPES, COMBINED WITH TEMPORARY MULCHING, SHALL BE UTILIZED ON A REGULAR BASIS. BIODEGRADABLE EROSION CONTROL MATTING OR AN EQUIVALENT SHALL BE USED TO STABILIZE ALL SLOPES STEEPER THAN 1:3.

THE FORECAST OF RAINFALL EVENTS SHALL TRIGGER IMMEDIATE PROTECTION OF EXPOSED SOILS.

1.4.9 WINTER STABILIZATION

VARIOUS MEASURES SPECIFIC TO WINTER MAY BE NECESSARY SHOULD THE PROJECT EXTEND INTO WINTER (OCTOBER 15 THROUGH APRIL 15). REFER TO THE LOW RISK SITE HANDBOOK FOR GUIDANCE.

IT IS ANTICIPATED THAT REMOVAL OF TREES WILL OCCUR DURING WINTER MONTHS. SEE SPECIAL PROVISIONS FOR ADDITIONAL RESTRICTIONS. PAYMENT FOR REMOVING INDIVIDUAL TREES WILL BE PAID FOR UNDER CONTRACT ITEM 201.10.

1.4.10 STABILIZE SOIL AT FINAL GRADE

EXPOSED SOIL MUST BE STABILIZED WITHIN 48 HOURS OF REACHING FINAL GRADE.

SEED, MULCH, FERTILIZER AND LIME SHALL BE USED TO ESTABLISH PERMANENT VEGETATION. FOR SLOPES STEEPER THAN 1:3, BIODEGRADABLE EROSION CONTROL MATTING OR AN EQUIVALENT SHALL BE USED INSTEAD OF MULCH.

TEMPORARY EROSION MATTING AND STONE FILL SHALL BE USED TO STABILIZE ROADWAY SLOPES AS SHOWN ON THE PLANS.

1.4.11 DE-WATERING ACTIVITIES

DISCHARGE FROM DEWATERING ACTIVITIES THAT FLOWS OFF OF THE CONSTRUCTION SITE MUST NOT CAUSE OR CONTRIBUTE TO A VIOLATION OF THE VERMONT WATER QUALITY STANDARDS.

TREATMENT OF DISCHARGE FROM DEWATERING ACTIVITIES IS ANTICIPATED. THE SPECIFIC MEANS FOR TREATMENT OF DISCHARGE SHALL BE PROVIDED BY THE CONTRACTOR. ALL COSTS FOR TREATMENT OF DISCHARGE SHALL BE PAID FOR UNDER CONTRACT ITEM 653.45.

1.4.12 INSPECT YOUR SITE

INSPECT THE PROJECT SITE BASED ON SPECIAL PROVISION REQUIREMENTS OR CONSTRUCTION GENERAL PERMIT AUTHORIZATION STIPULATIONS.

1.5 SEQUENCE AND STAGING

THIS SECTION WILL BE DEVELOPED BY THE CONTRACTOR USING THE GUIDANCE OUTLINED IN THE VTRANS EPSC PLAN CONTRACTOR CHECKLIST.

1.5.1 CONSTRUCTION SEQUENCE

1.5.2 OFF-SITE ACTIVITIES

IN ADDITION TO THE CONTRACTOR CHECKLIST ANY ACTIVITIES OUTSIDE THE CONSTRUCTION LIMITS SHALL FOLLOW SUBSECTIONS 105.25- 105.29 OF THE STANDARD SPECIFICATIONS FOR CONSTRUCTION.

1.5.3 UPDATES

CLD 14-0116 MODEL: ECOI

PROJECT NAME: ST. JOHNSBURY
PROJECT NUMBER: BF 7000(20)

CONSULTING ENGINEERS

FILE NAME: 86e048/cos/z86e048erodet.dgn PLOT DATE: 10/26/2016
PROJECT LEADER: J.BYATT DRAWN BY: W.GORDON
DESIGNED BY: M.HALEY CHECKED BY: P.SHEDD
EPSC NARRATIVE SHEET 62 OF 70

SOIL INFORMATION:
SALMON-ADAMANT COMPLEX
VERY ROCKY, 15%-25% SLOPES
K = 0.64, HIGHLY ERODIBLE
HYDROLOGIC SOIL GROUP: B

SOIL INFORMATION:
SALMON-ADAMANT COMPLEX
VERY ROCKY, 25%-50% SLOPES
K = 0.64, HIGHLY ERODIBLE
HYDROLOGIC SOIL GROUP: B

SOIL INFORMATION:
SALMON-ADAMANT COMPLEX
VERY ROCKY, 15%-25% SLOPES
K = 0.64, HIGHLY ERODIBLE
HYDROLOGIC SOIL GROUP: B

SOIL INFORMATION:
SALMON-ADAMANT COMPLEX
VERY ROCKY, 25%-50% SLOPES
K = 0.64, HIGHLY ERODIBLE
HYDROLOGIC SOIL GROUP: B

BENCH MARK
CHISELED SQUARE
ON BOUNDRY MARKER
ELEV= 703.27

N
VT STATE PLANE GRID

0 20 40
(SCALE 1" = 20')

CLD 14-0116 MODEL: L01

PROJECT NAME: ST. JOHNSBURY	
PROJECT NUMBER: BF 7000(20)	
FILE NAME: 86e048/z86e048bdreroex.dgn	PLOT DATE: 10/26/2016
PROJECT LEADER: J.BYATT	DRAWN BY: W.GORDON
DESIGNED BY: M.HALEY	CHECKED BY: P.SHEDD
EPSC EXISTING PLAN SHEET	SHEET 63 OF 70

CONSULTING ENGINEERS

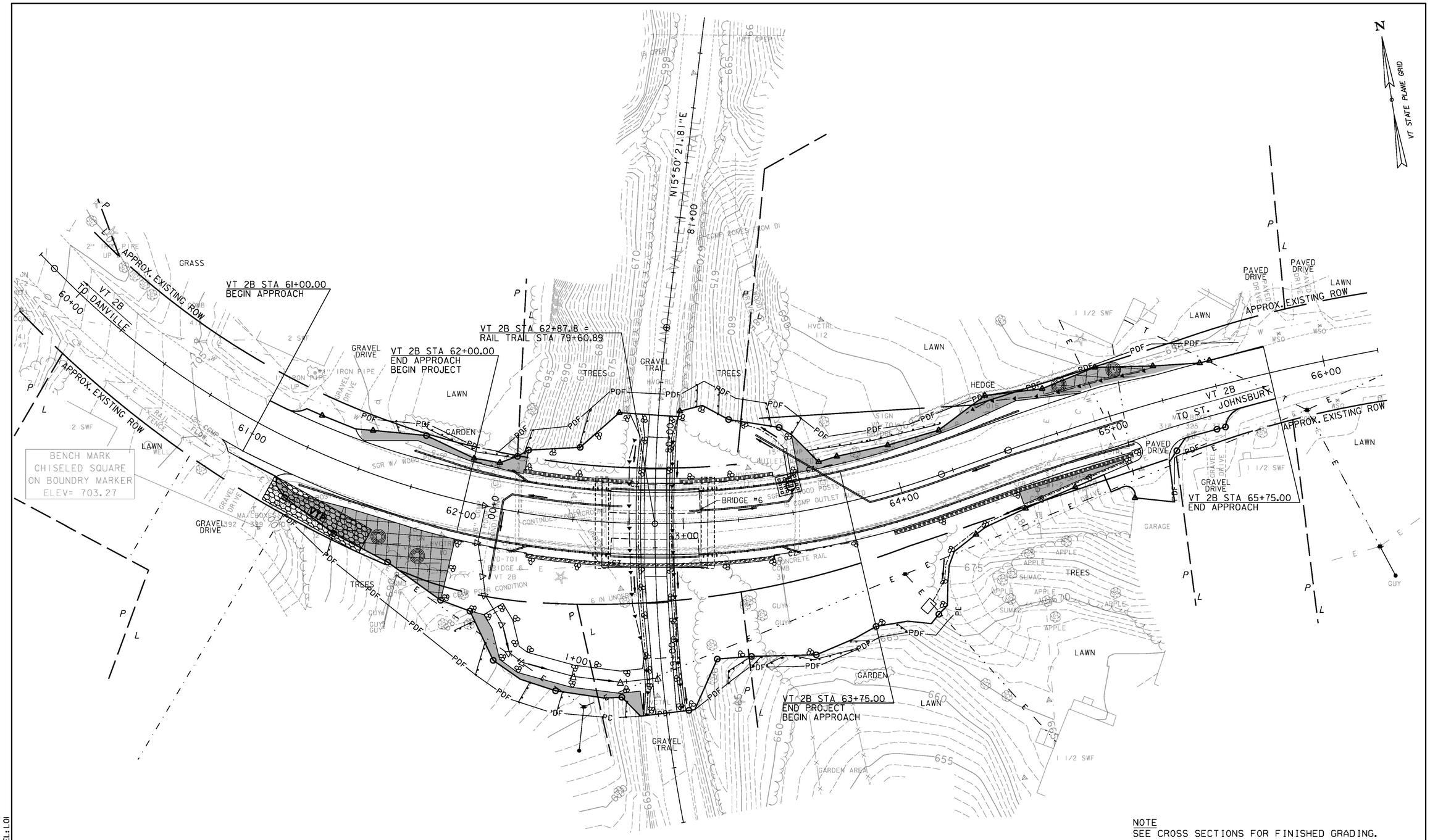

NOTE
SEE CROSS SECTIONS FOR FINISHED GRADING.

PROJECT NAME:	ST. JOHNSBURY
PROJECT NUMBER:	BF 7000(20)

FILE NAME: 86e048/z86e048bdrerocn.dgn	PLOT DATE: 10/26/2016
PROJECT LEADER: J.BYATT	DRAWN BY: W.GORDON
DESIGNED BY: M.HALEY	CHECKED BY: P.SHEDD
EPSC CONSTRUCTION PLAN SHEET	SHEET 64 OF 70

CONSULTING ENGINEERS

CLD 14-0116 MODEL: LOI

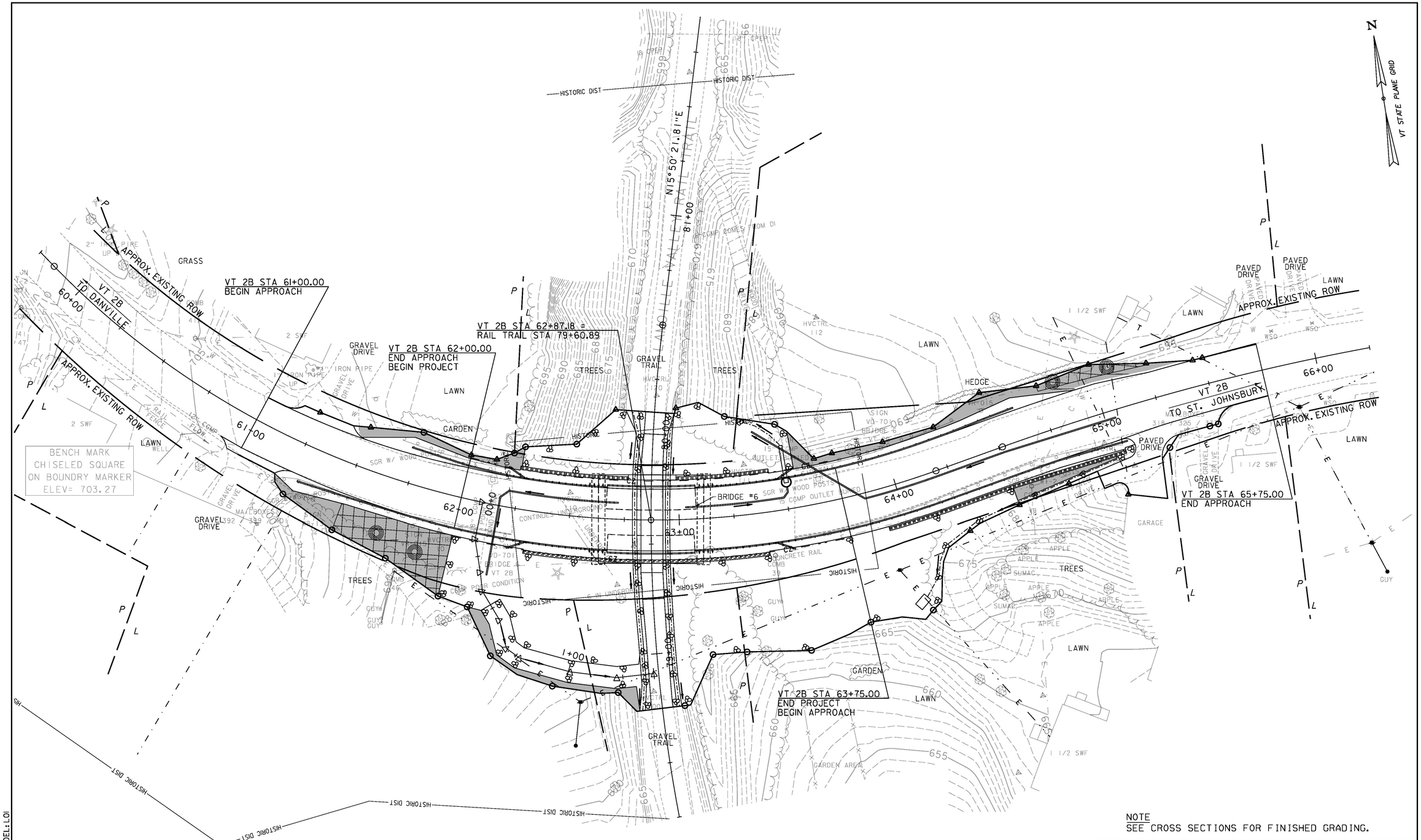

NOTE
SEE CROSS SECTIONS FOR FINISHED GRADING.

PROJECT NAME:	ST. JOHNSBURY
PROJECT NUMBER:	BF 7000(20)
FILE NAME: 86e048/z86e048bdrerofl.dgn	PLOT DATE: 10/26/2016
PROJECT LEADER: J.BYATT	DRAWN BY: W.GORDON
DESIGNED BY: M.HALEY	CHECKED BY: P.SHEDD
EPSC FINAL PLAN SHEET	SHEET 65 OF 70

CONSULTING ENGINEERS

CLD 14-0116 MODEL: L01

VAOT LOW GROW/FINE FESCUE MIX						
	LBS/AC					
WEIGHT	BROADCAST	HYDROSEED	NAME	LATIN NAME	GERM	PURITY
38%	57	95	CREEPING RED FESCUE	FESTUCA RUBRA VAR. RUBRA	90%	98%
29%	43.5	72.5	HARD FESCUE	FESTUCA LONGIFOLIA	85%	95%
15%	22.5	37.5	CHEWINGS FESCUE	FESTUCA RUBRA VAR. COMMUTATA	87%	95%
15%	22.5	37.5	ANNUAL RYEGRASS	LOLIUM MULTIFLORUM	90%	95%
3%	4.5	7.5	INERTS			
100%	150	250				

VAOT RURAL AREA MIX						
	LBS/AC					
WEIGHT	BROADCAST	HYDROSEED	NAME	LATIN NAME	GERM	PURITY
37.5%	22.5	45	CREEPING RED FESCUE	FESTUCA RUBRA VAR. RUBRA	85%	98%
37.5%	22.5	45	TALL FESCUE	FESTUCA ARUNDINACEA	90%	95%
5.0%	3	6	RED TOP	AGROSTIS GIGANTEA	90%	95%
15.0%	9	18	WHITE FIELD CLOVER	TRIFOLIUM REPENS	85%	98%
5.0%	3	6	ANNUAL RYE GRASS	LOLIUM MULTIFLORUM	85%	95%
100%	60	120				

GENERAL AMENDMENT GUIDANCE		
FERTILIZER	LIME	
10/20/10	AG LIME	PELLITIZED
500 LBS/AC	2 TONS/AC	1 TONS/AC

CONSTRUCTION GUIDANCE

1. SEED MIX: THE CONTRACTOR SHALL COORDINATE WITH THE RESIDENT ENGINEER ON WHICH SEED MIX TO USE.
2. SEED MIX: USE AS INDICATED IN THE PLANS AND/OR FOR ALL ESTABLISHED UPLAND (NON WETLAND) AREAS DISTURBED BY THE CONTRACTOR.
3. ALL SEED MIXTURES: SHALL NOT HAVE A WEED CONTENT EXCEEDING 0.40% BY WEIGHT AND SHALL BE FREE OF ALL NOXIOUS SEED.
4. FERTILIZER AND LIMESTONE: SHALL FOLLOW RATES SHOWN ON PLAN OR AS DIRECTED BY THE ENGINEER.
5. HAY MULCH: TO BE PLACED ON EARTH SLOPES AT THE RATE OF 2 TONS/ACRE, ACHIEVE 90% GROUND COVER OR AS DIRECTED BY THE ENGINEER.
6. HYDROSEEDING: ALTHOUGH GUIDANCE IS GIVEN ABOVE THE SITE CONDITIONS AND THE TYPE OF HYDROSEED PROPOSED FOR USE WILL ULTIMATELY DICTATE THE AMOUNTS AND TYPES OF SOIL AMENDMENTS TO BE APPLIED.
7. TURF ESTABLISHMENT: PLACING SEED, FERTILIZER, LIME AND MULCH PRIOR TO SEPTEMBER 15 AND AFTER APRIL 15 CAN BETTER ENSURE A VIGOROUS GROWTH OF GRASS.

ADAPTED FROM VTRANS TECHNICAL LANDSCAPE MANUAL FOR ROADWAYS AND TRANSPORTATION FACILITIES

TURF ESTABLISHMENT

THIS WORK ~~SHALL~~ WILL BE PERFORMED IN ACCORDANCE WITH SECTION 651 FOR SEED (PAY ITEM 651.15)

REVISIONS		
JANUARY 12, 2015	WHF	

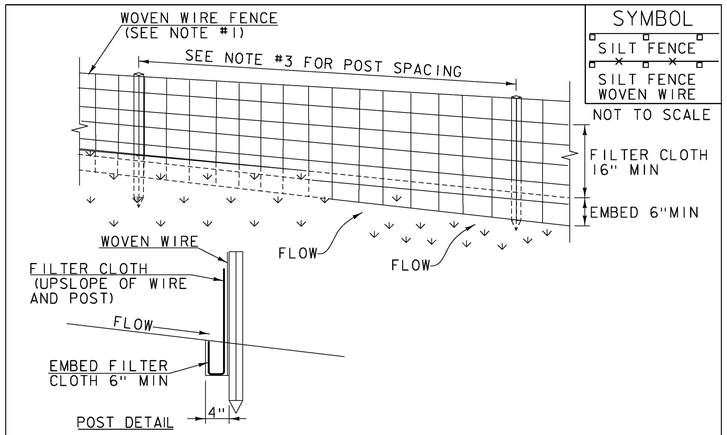

SYMBOL

SILT FENCE

SILT FENCE WOVEN WIRE

NOT TO SCALE

CONSTRUCTION SPECIFICATIONS

1. WOVEN WIRE REINFORCED FENCE IS REQUIRED WITHIN 100' UPSLOPE OF RECEIVING WATERS WHEN THE PROJECT FALLS UNDER A CONSTRUCTION STORMWATER PERMIT. WOVEN WIRE SHALL BE A MIN. 14 GAUGE WITH A 6" MAX. MESH OPENING.
2. FILTER CLOTH SHALL BE EITHER FILTER X, MIRAFI100X, STABILINKA T140N OR APPROVED EQUIVALENT.
3. POST SPACING FOR WIRE-BACKED FENCE SHALL BE 10' MAXIMUM. FOR FILTER-CLOTH FENCE, WHEN ELONGATION IS >50%, POST SPACING SHALL NOT EXCEED 4' AND WHEN ELONGATION IS <50%, POST SPACING SHALL NOT EXCEED 6'.
4. WOVEN WIRE FENCE IS TO BE FASTENED SECURELY TO FENCE POSTS WITH WIRE TIES. FILTER CLOTH IS TO BE FASTENED SECURELY TO WOVEN WIRE FENCE WITH TIES SPACED EVERY 24" AT TOP AND MID SECTION.
5. WHEN TWO SECTIONS OF FILTER CLOTH ADJOIN EACH OTHER THEY SHALL BE OVER-LAPPED BY 6" AND FOLDED.
6. MAINTENANCE SHALL BE PERFORMED AS NEEDED AND MATERIAL REMOVED WHEN SEDIMENT REACHES HALF OF FABRIC HEIGHT.

ADAPTED FROM DETAILS PROVIDED BY: NEW YORK STATE DEC ORIGINALLY DEVELOPED BY USDA-NRCS VERMONT DEPARTMENT OF ENVIRONMENTAL CONSERVATION

SILT FENCE

NOTES:
REFER TO "THE VERMONT STANDARDS & SPECIFICATIONS FOR EROSION PREVENTION & SEDIMENT CONTROL -2006- "FROM THE VT AGENCY OF NATURAL RESOURCES FOR ADDITIONAL GUIDANCE.

THIS WORK ~~SHALL~~ WILL BE PERFORMED IN ACCORDANCE WITH SECTION 649 AND AS SHOWN IN THE PLANS FOR GEOTEXTILE FOR SILT FENCE (PAY ITEM 649.51) ~~OR GEOTEXTILE FOR SILT FENCE, WOVEN WIRE REINFORCED (PAY ITEM 649.515).~~

REVISIONS		
MARCH 21, 2008	WHF	
DECEMBER 11, 2008	WHF	
JANUARY 13, 2009	WHF	

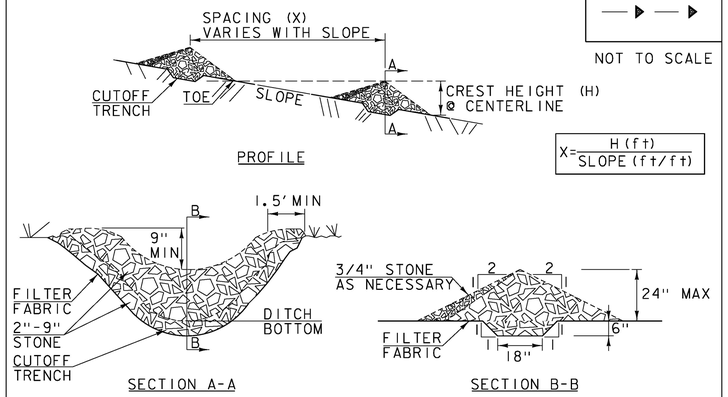

SYMBOL

NOT TO SCALE

CONSTRUCTION SPECIFICATIONS

1. STONE WILL BE PLACED ON A FILTER FABRIC FOUNDATION.
2. CHECK DAMS SHALL BE SPACED SO THAT THE ELEVATION OF THE CREST OF THE DOWNSTREAM DAM IS AT THE SAME ELEVATION AS THE TOE OF THE UPSTREAM DAM.
3. 3/4" FILTERING STONE MAY BE ADDED TO THE FACE OF THE CHECK DAM AS NECESSARY.
4. EXTEND THE STONE A MINIMUM OF 1.5' BEYOND THE DITCH BANKS TO PREVENT CUTTING AROUND THE DAM.
5. PROTECT CHANNEL DOWNSTREAM OF THE LOWEST CHECK DAM FROM SCOUR AND EROSION WITH STONE OR LINER AS APPROPRIATE.
6. ENSURE THAT CHANNEL APPURTENANCES SUCH AS CULVERT ENTRANCES BELOW CHECK DAMS ARE NOT SUBJECT TO DAMAGE OR BLOCKAGE FROM DISPLACED STONE.
7. MAXIMUM DRAINAGE AREA 2 ACRES.

ADAPTED FROM DETAILS PROVIDED BY: NEW YORK STATE DEC ORIGINALLY DEVELOPED BY USDA-NRCS VERMONT DEPARTMENT OF ENVIRONMENTAL CONSERVATION

CHECK DAM

NOTES:
REFER TO "THE VERMONT STANDARDS & SPECIFICATIONS FOR EROSION PREVENTION & SEDIMENT CONTROL -2006- "FROM THE VT AGENCY OF NATURAL RESOURCES FOR ADDITIONAL GUIDANCE.

THIS WORK ~~SHALL~~ WILL BE PERFORMED IN ACCORDANCE WITH SECTION 653 FOR TEMPORARY STONE CHECK DAM, TYPE I (PAY ITEM 653.25)

REVISIONS		
MARCH 21, 2008	WHF	
JANUARY 8, 2009	WHF	

CLD 14-0116 MODEL: ECO2

PROJECT NAME: ST. JOHNSBURY
PROJECT NUMBER: BF 7000(20)

FILE NAME: 86e048/cos/z86e048erodet.dgn PLOT DATE: 10/26/2016
PROJECT LEADER: J.BYATT DRAWN BY: W.GORDON
DESIGNED BY: M.HALEY CHECKED BY: P.SHEDD
EPSC DETAILS SHEET 1 SHEET 66 OF 70

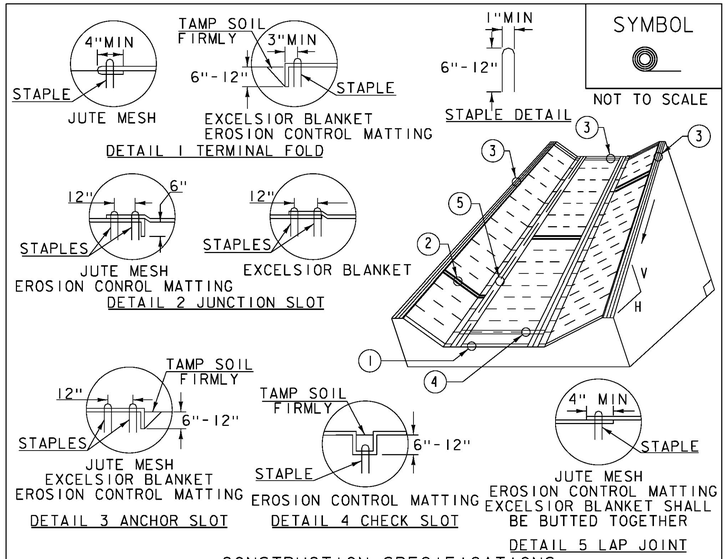

SYMBOL

NOT TO SCALE

CONSTRUCTION SPECIFICATIONS

1. EROSION MATTING, CHECK SLOTS, SHALL BE SPACED IN DITCH CHANNEL SO THAT ONE OCCURS WITHIN EACH 50' ON SLOPES OF MORE THAN 4% AND LESS THAN 6%. ON SLOPES OF 6% OR MORE, THEY SHALL BE SPACED SO THAT ONE OCCURS WITHIN EACH 25'.
2. APPLY FERTILIZER, LIME SEED PRIOR TO PLACING MATTING.
3. STAPLES ARE TO BE PLACED ALTERNATELY, IN COLUMNS APPROXIMATELY 2' APART AND IN ROWS APPROXIMATELY 3' APART. APPROXIMATELY 175 STAPLES ARE REQUIRED PER 4'X225' ROLL OF MATERIAL AND 125 STAPLES ARE REQUIRED PER 4'X150' ROLL OF MATERIAL.
4. DISTURBED AREAS SHALL BE SMOOTHLY GRADED. EROSION CONTROL MATERIAL SHALL BE PLACED LOOSELY OVER GROUND SURFACE. DO NOT STRETCH.
5. ALL TERMINAL ENDS AND TRANSVERSE LAPS SHALL BE STAPLED AT APPROXIMATELY 12" INTERVALS.

ADAPTED FROM DETAILS PROVIDED BY: NEW YORK STATE DEC
ORIGINALLY DEVELOPED BY USDA-NRCS
VERMONT DEPARTMENT OF ENVIRONMENTAL CONSERVATION

ROLLED EROSION CONTROL PRODUCT (RECP) DITCH

NOTES:
REFER TO "THE VERMONT STANDARDS & SPECIFICATIONS FOR EROSION PREVENTION & SEDIMENT CONTROL -2006- "FROM THE VT AGENCY OF NATURAL RESOURCES FOR ADDITIONAL GUIDANCE. WILL
THIS WORK ~~SHALL~~ BE PERFORMED IN ACCORDANCE WITH SECTION 653 AND AS SHOWN IN THE PLANS FOR TEMPORARY EROSION MATTING (PAY ITEM 653.20) ~~OR PERMANENT EROSION MATTING (PAY ITEM 653.21).~~

REVISIONS		
MARCH 8, 2007		JMF
APRIL 16, 2007		WHF
JANUARY 13, 2009		WHF

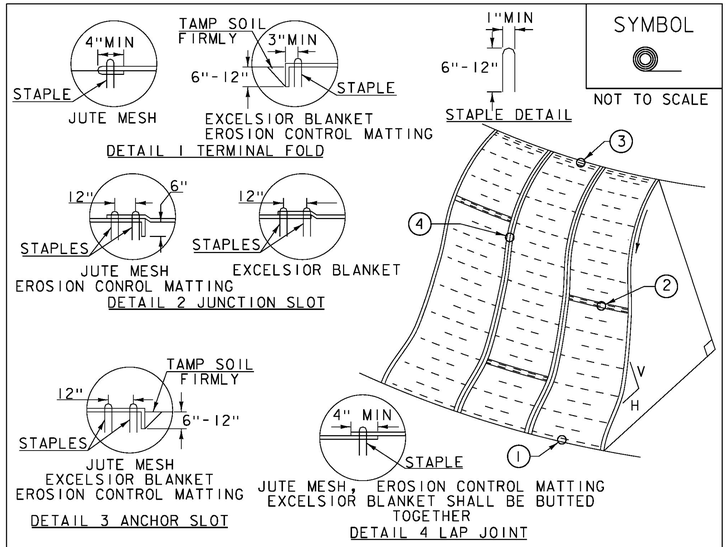

SYMBOL

NOT TO SCALE

CONSTRUCTION SPECIFICATIONS

1. APPLY TO SLOPES GREATER THAN 3H:1V OR WHERE NECESSARY TO AID IN ESTABLISHING VEGETATION.
2. APPLY FERTILIZER, LIME SEED PRIOR TO PLACING MATTING.
3. STAPLES ARE TO BE PLACED ALTERNATELY, IN COLUMNS APPROXIMATELY 2' APART AND IN ROWS APPROXIMATELY 3' APART. APPROXIMATELY 175 STAPLES ARE REQUIRED PER 4'X225' ROLL OF MATERIAL AND 125 STAPLES ARE REQUIRED PER 4'X150' ROLL OF MATERIAL.
4. DISTURBED AREAS SHALL BE SMOOTHLY GRADED. EROSION CONTROL MATERIAL SHALL BE PLACED LOOSELY OVER GROUND SURFACE. DO NOT STRETCH.
5. ALL TERMINAL ENDS AND TRANSVERSE LAPS SHALL BE STAPLED AT APPROXIMATELY 12" INTERVALS.

ADAPTED FROM DETAILS PROVIDED BY: NEW YORK STATE DEC
ORIGINALLY DEVELOPED BY USDA-NRCS
VERMONT DEPARTMENT OF ENVIRONMENTAL CONSERVATION

ROLLED EROSION CONTROL PRODUCT (RECP) SIDE SLOPE

NOTES:
REFER TO "THE VERMONT STANDARDS & SPECIFICATIONS FOR EROSION PREVENTION & SEDIMENT CONTROL -2006- "FROM THE VT AGENCY OF NATURAL RESOURCES FOR ADDITIONAL GUIDANCE. WILL
THIS WORK ~~SHALL~~ BE PERFORMED IN ACCORDANCE WITH SECTION 653 AND AS SHOWN IN THE PLANS FOR TEMPORARY EROSION MATTING (PAY ITEM 653.20) ~~OR PERMANENT EROSION MATTING (PAY ITEM 653.21).~~

REVISIONS		
APRIL 16, 2007		JMF
JANUARY 13, 2009		WHF

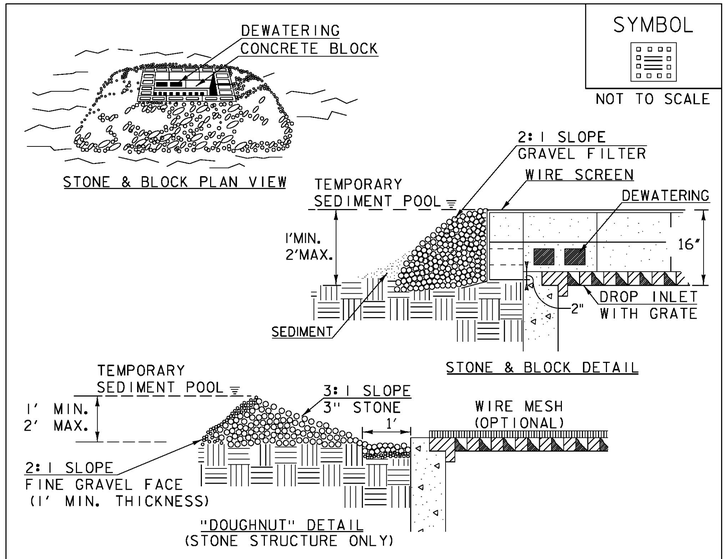

SYMBOL

NOT TO SCALE

CONSTRUCTION SPECIFICATIONS

1. LAY ONE BLOCK ON EACH SIDE OF THE STRUCTURE ON ITS SIDE FOR DEWATERING. FOUNDATION SHALL BE 2" MINIMUM BELOW REST OF INLET AND BLOCKS SHALL BE PLACED AGAINST INLET FOR SUPPORT.
2. HARDWARE CLOTH OR ½" WIRE MESH SHALL BE PLACED OVER BLOCK OPENINGS TO SUPPORT STONE.
3. USE CLEAN STONE OR GRAVEL ½"- ¾" IN DIAMETER PLACED 2" BELOW TOP OF THE BLOCK ON A 2:1 SLOPE OR FLATTER.
4. FOR STONE STRUCTURES ONLY, A 1' THICK LAYER OF THE FILTER STONE WILL BE PLACED AGAINST THE 3" STONE AS SHOWN ON THE DRAWINGS.
5. MAXIMUM DRAINAGE AREA 1 ACRE

ADAPTED FROM DETAILS PROVIDED BY: NEW YORK STATE DEC
ORIGINALLY DEVELOPED BY USDA-NRCS
VERMONT DEPARTMENT OF ENVIRONMENTAL CONSERVATION

STONE & BLOCK DROP INLET PROTECTION

NOTES:
REFER TO "THE VERMONT STANDARDS & SPECIFICATIONS FOR EROSION PREVENTION & SEDIMENT CONTROL -2006- "FROM THE VT AGENCY OF NATURAL RESOURCES FOR ADDITIONAL GUIDANCE. WILL
THIS WORK ~~SHALL~~ BE PERFORMED IN ACCORDANCE WITH SECTION 653 FOR INLET PROTECTION DEVICE, TYPE I (PAY ITEM 653.40).

REVISIONS		
MARCH 6, 2008		WHF
JANUARY 13, 2009		WHF

CLD 14-0116 MODEL: EC03

PROJECT NAME: ST. JOHNSBURY
PROJECT NUMBER: BF 7000(20)

FILE NAME: 86e048/cos/z86e048erodet.dgn PLOT DATE: 10/26/2016
PROJECT LEADER: J.BYATT DRAWN BY: W.GORDON
DESIGNED BY: M.HALEY CHECKED BY: P.SHEDD
EPSC DETAILS SHEET 2 SHEET 67 OF 70

SYMBOL

NOT TO SCALE

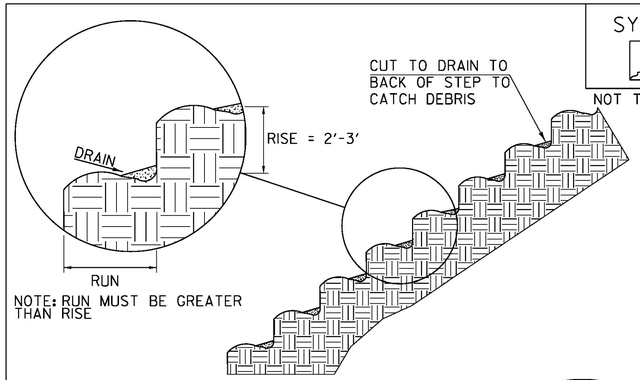

NOTE: RUN MUST BE GREATER THAN RISE

STAIR STEPPING CUT SLOPES

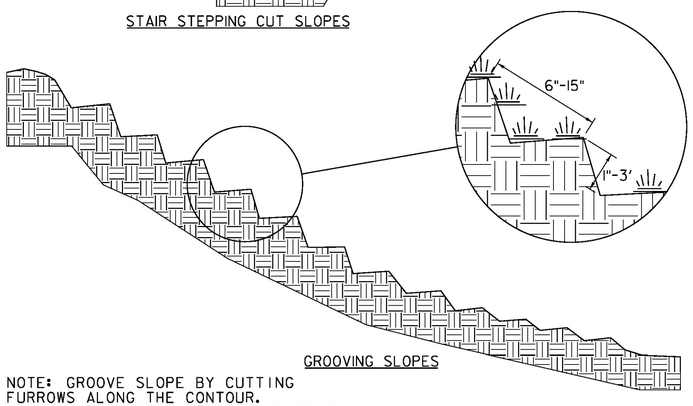

GROOVING SLOPES

NOTE: GROOVE SLOPE BY CUTTING FURROWS ALONG THE CONTOUR. IRREGULARITIES IN THE SOIL SURFACE CATCH RAINWATER AND RETAIN LIME, FERTILIZER AND SEED.

ADAPTED FROM DETAILS PROVIDED BY: NEW YORK STATE DEC ORIGINALLY DEVELOPED BY USDA-NRCS VERMONT DEPARTMENT OF ENVIRONMENTAL CONSERVATION

SURFACE ROUGHENING

NOTES:
REFER TO "THE VERMONT STANDARDS & SPECIFICATIONS FOR EROSION PREVENTION & SEDIMENT CONTROL -2006- "FROM THE VT AGENCY OF NATURAL RESOURCES FOR ADDITIONAL GUIDANCE.
THIS WORK WILL ~~SHALL~~ BE CONSIDERED INCIDENTAL TO THE CONTRACT

REVISIONS	
APRIL 1, 2008	WHF
JANUARY 13, 2009	WHF

SYMBOL

NOT TO SCALE

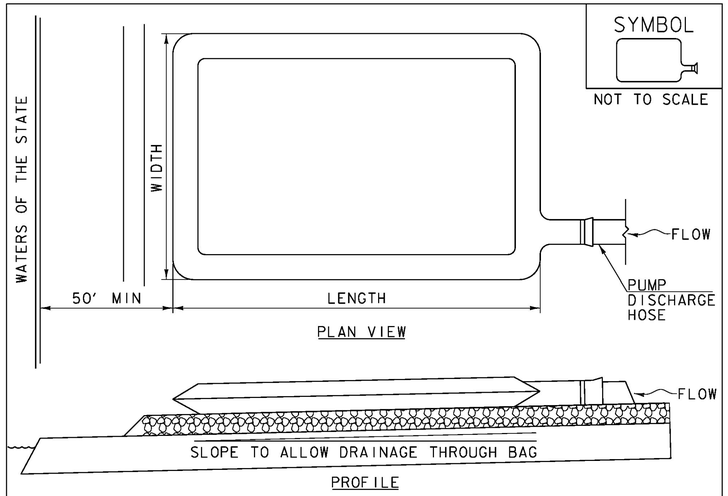

CONSTRUCTION SPECIFICATIONS

1. THE PRIMARY PURPOSE OF FILTER BAG IS TO RETAIN SILT, SAND, AND FINES DURING DEWATERING OPERATIONS.
2. FILTER BAGS SHALL BE INSTALLED ON A VEGETATED SLOPE GRADED TO ALLOW INCOMING WATER TO FLOW THROUGH THE BAG.
3. FILTER BAGS MAY ALSO BE PLACED ON COARSE AGGREGATE, STONE, OR HAYBALES TO INCREASE FILTRATION EFFICIENCY.
4. FILTER BAGS SHALL BE LOCATED A MINIMUM OF 50' FROM WATERS OF THE STATE UNLESS OTHERWISE APPROVED BY THE ENGINEER.
5. THE NECK OF THE FILTER BAG SHALL BE STRAPPED TIGHTLY TO THE DISCHARGE HOSE.
6. A FILTER BAG IS FULL WHEN IT NO LONGER CAN EFFICIENTLY FILTER SEDIMENT OR ALLOW WATER TO PASS AT A REASONABLE RATE.
7. FILTER BAG SHALL BE DISPOSED OF AS APPROVED IN THE EPSC PLAN OR AS DIRECTED BY THE ENGINEER.

FILTER BAG

NOTES:
REFER TO "THE VERMONT STANDARDS & SPECIFICATIONS FOR EROSION PREVENTION & SEDIMENT CONTROL -2006- "FROM THE VT AGENCY OF NATURAL RESOURCES FOR ADDITIONAL GUIDANCE.
THIS WORK WILL ~~SHALL~~ BE PERFORMED IN ACCORDANCE WITH SECTION 653 FOR FILTER BAG (PAY ITEM 653.45) AND AS SPECIFIED IN THE CONTRACT.

REVISIONS	
MARCH 24, 2008	WHF
JANUARY 13, 2009	WHF

SYMBOL

NOT TO SCALE

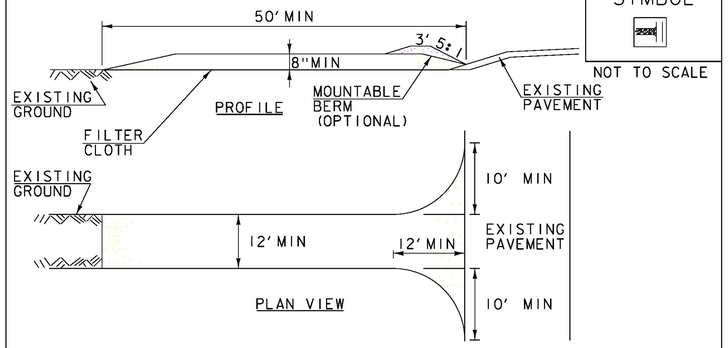

CONSTRUCTION SPECIFICATIONS

1. STONE SIZE- USE 1-4" STONE, RECLAIMED OR RECYCLED CONCRETE EQUIVALENT.
2. LENGTH- NOT LESS THAN 50' (EXCEPT ON A SINGLE RESIDENCE LOT WHERE A 30' MINIMUM LENGTH APPLIES).
3. THICKNESS- NOT LESS THAN 8".
4. WIDTH- 12' MINIMUM, BUT NOT LESS THAN THE FULL WIDTH AT POINTS WHERE INGRESS OR EGRESS OCCURS. 24' IF SINGLE ENTRANCE TO SITE.
5. GEOTEXTILE MUST BE PLACED OVER THE ENTIRE AREA PRIOR TO PLACING STONE.
6. SURFACE WATER- ALL SURFACE WATER FLOWING OR DIVERTED TOWARD CONSTRUCTION ENTRANCES SHALL BE PIPED BENEATH THE ENTRANCE. IF PIPING IS IMPRACTICAL, A MOUNTABLE BERM WITH 5:1 SLOPES WILL BE PERMITTED.
7. MAINTENANCE- THE ENTRANCE SHALL BE MAINTAINED IN A CONDITION WHICH WILL PREVENT TRACKING OR FLOWING OF SEDIMENT ONTO PUBLIC RIGHTS-OF-WAY, ALL SEDIMENT SPILLED, DROPPED, WASHED OR TRACKED ONTO PUBLIC RIGHTS-OF-WAY MUST BE REMOVED IMMEDIATELY.
8. WHEN WASHING IS REQUIRED, IT SHALL BE DONE ON AN AREA STABILIZED WITH STONE AND WHICH DRAINS INTO AN APPROVED SEDIMENT TRAPPING DEVICE.
9. PERIODIC INSPECTION AND NEEDED MAINTENANCE SHALL BE PROVIDED ACCORDING TO PERMIT REQUIREMENTS.

ADAPTED FROM DETAILS PROVIDED BY: NEW YORK STATE DEC ORIGINALLY DEVELOPED BY USDA-NRCS VERMONT DEPARTMENT OF ENVIRONMENTAL CONSERVATION

STABILIZED CONSTRUCTION ENTRANCE

NOTES:
REFER TO "THE VERMONT STANDARDS & SPECIFICATIONS FOR EROSION PREVENTION & SEDIMENT CONTROL -2006- "FROM THE VT AGENCY OF NATURAL RESOURCES FOR ADDITIONAL GUIDANCE.
THIS WORK WILL ~~SHALL~~ BE PERFORMED IN ACCORDANCE WITH SECTION 653 FOR VEHICLE TRACKING PAD (PAY ITEM 653.35).

REVISIONS	
MARCH 24, 2008	WHF
JANUARY 13, 2009	WHF

CLD 14-016 MODEL: EC04

CONSULTING ENGINEERS

PROJECT NAME: ST. JOHNSBURY
PROJECT NUMBER: BF 7000(20)

FILE NAME: 86e048/cos/z86e048erodet.dgn PLOT DATE: 10/26/2016
PROJECT LEADER: J.BYATT DRAWN BY: W.GORDON
DESIGNED BY: M.HALEY CHECKED BY: P.SHEDD
EPSC DETAILS SHEET 3 SHEET 68 OF 70

STATE OF VERMONT
AGENCY OF TRANSPORTATION

RIGHT - OF - WAY DETAIL SHEET

TABLE OF PROPERTY ACQUISITION

PARCEL NO.	PROPERTY OWNER	ROW LAYOUT NO.	BEGINNING STATION	ENDING STATION	TAKE	REMAINDER	RIGHT			RECORDING DATA					REMARKS
					AREA ±	AREA ±	TYPE	T / P	AREA ±	TITLE	DATE	TOWN / CITY	BOOK	PAGE	
1	MOORE, THOMAS E. & SHARON R.	1	61+00.00 LT	62+20.22 LT	0.07 Ac.		ALL R. T. & I.								VT RTE. 2B HWY. EASE; 2,910 SF
			61+30 LT												DRIVE - 24.0' GRAVEL W/ 4' PAVED APRON; MM 0116
			61+55 LT	62+20.20 LT			INSTALL	T	140 SF						INCL. PDF & EC
2	BILLINGS, CRAIG M. & TRACEY	1	63+26.71 LT	65+88.33 LT	0.17 Ac.		ALL R. T. & I.								VT RTE. 2B HWY. EASE; 7,465 SF
			63+31.33 LT	63+60 LT			CONSTRUCTION	T	150 SF						INCL. PDF & EC
			64+35.46 LT	64+68.16 LT			DITCH	P	50 SF						
			64+80 LT	65+34 LT			INSTALL	T	60 SF						PDF
3	WRIGHT, KAREN	1	61+00.00 RT	62+55.17 RT	0.14 Ac.		ALL R. T. & I.								VT RTE. 2B HWY. EASE; 5,905 SF
			61+06 RT												DRIVE - 24.0' GRAVEL W/ 4' PAVED APRON; MM 0116
			61+27 RT	62+68 RT			ACCESS	T	1,525 SF						INCL. PDF & EC
			61+76.02 RT	62+69.74 RT			UTILITY	P	3,060 SF						
			61+80.75 RT	62+66.20 RT			SLOPE	P	2,340 SF						INCL. TEMPORARY EC & PERMANENT DRAINAGE DITCH
			62+60 RT				INSTALL & MAINTAIN	P							GUY WIRE & ANCHOR
4	BRAZIL, ROBERT A. &	1	63+23.29 RT	65+24.08 RT	0.13 Ac.		ALL R. T. & I.								VT RTE. 2B HWY. EASE; 5,625 SF
	BRIDGES, MELISSA L.		63+23.29 RT	64+58.42 RT			SLOPE	P	3,885 SF						INCL. PDF & EC
			63+23.29 RT	65+24.08 RT			UTILITY	P	4,480 SF						0.10 Ac.
			63+23.29 RT	65+24.08 RT			D&C	T							WATER
			63+49.76 RT	64+52.26 RT			DITCH & DRAINAGE	P	235 SF						
			64+08 RT	64+90 RT			ACCESS	T	810 SF						
			64+90 RT	65+22 RT			DRIVE	T	350 SF						13.5' PAVED; MM 0123
			65+17 RT	65+24 RT			INSTALL	T	25 SF						PDF
5	PHELPS, KATHERINE L.	1	65+22.32 RT	65+80.54 RT	0.04 Ac.		ALL R. T. & I.								VT RTE. 2B HWY. EASE; 1,590 SF
			65+22.84 RT	65+80.54 RT			UTILITY	P	335 SF						
			65+45.0												DRIVE - 9.7' GRAVEL W/ 6.5' PAVED APRON; MM 0124
6	TWO BEES, LLC.	1	65+72.59 RT	66+15.70 RT			UTILITY	P	1,010 SF						
			66+09 RT	66+13 RT			INSTALL & MAINTAIN	P							GUY WIRE & ANCHOR
			66+09 RT	66+13 RT			REMOVE	T							POLE, GUY WIRE & ANCHOR
7	TELEPHONE OPERATING COMPANY OF VERMONT, INC.		61+00.00 CL	66+15.70 RT											UTILITY
8	GREEN MOUNTAIN POWER CORPORATION		61+00.00 CL	66+15.70 RT											UTILITY

TABLE OF REVISIONS

REVISION NO.	ROW SET SHEET #	DESCRIPTION	DATE
1	3, 4, 9, 11	PARCEL NO. 6, TWO BEES, LLC -	8/4/16
		REMOVE ALL EASEMENTS FROM PARCEL	
		NO. 6 DUE TO REVISIONS TO AERIAL	
		UTILITY RELOCATION ROUTES;	
		REMOVE "RESET" FROM REMOVE	
		AND RESET (T) AT STA 66+09 RT/	
		STA 66+13 RT. PER C.O. 10131	
		MADE BY: CLD APPROVED BY:	

APPROVED: RYAN CLOUTIER, LS DATE: 01-14-2016
CHIEF, PLANS & TITLES

PROJECT NAME: ST. JOHNSBURY
PROJECT NUMBER: BF 7000(20)

FILE NAME: z86e048rowdet.dgn
PROJECT LEADER: J. BYATT
DESIGNED BY: M. HALEY
ROW DETAIL SHEET #1

PLOT DATE: 8/4/2016
DRAWN BY: S. GOODWIN
CHECKED BY: P. SHEDD
SHEET 69 OF 70

CLD 14-0116

REMOVAL AND DISPOSAL OF GUARDRAIL
61+18 TO 62+25 RT
61+67 TO 62+20 LT
63+51 TO 65+04 RT
63+56 TO 64+35 LT

GUARDRAIL APPROACH SECTION, GALVANIZED 2 RAIL BOX BEAM (COATED BLACK)
62+18.7 TO 62+66.4 LT
62+23.5 TO 62+67.9 RT
63+06.5 TO 63+50.8 RT
63+08 TO 63+55.7 LT

BOX BEAM GUARDRAIL (COATED BLACK)
61+28 TO 62+23.5 RT
61+71.9 TO 62+18.7 LT
63+50.8 TO 64+92.8 RT
63+55.7 TO 64+48 LT

MANUFACTURED TERMINAL SECTION, TANGENT (COATED BLACK)
64+48 TO 64+62 LT
64+92.8 TO 65+07 RT

DELINEATOR WITH STEEL POST
61+28 RT
61+71.9 LT
64+62 LT
65+07 RT

RELOCATE MAILBOX, MULTIPLE SUPPORT
65+33 RT

CAST-IN-PLACE CONCRETE CURB, TYPE B
63+08 TO 63+58 LT

EXTENSION SERVICE BOX AND CURB STOP
64+92 RT

NOTE
AN EXISTING 1 INCH WATER LINE IS LOCATED ALONG THE NORTH SIDE OF VT ROUTE 2B. CONTRACTOR SHALL INSTALL 4 INCHES OF INSULATION BOARD FOR A 2 FEET WIDTH CENTERED OVER THE WATER LINE FROM APPROXIMATE STA 62+25 TO 63+50 LT. INSTALLATION WILL BE PAID FOR UNDER ITEM 622.10, INSULATION BOARD.

EXISTING DRAINAGE
1 STA 62+12.5 LT TO 62+14.5 RT
EXISTING 18" CGMP W/ DI
REMOVE DI/ REMOVE 40' PIPE

2 STA 62+43.9 LT TO 62+70.9 RT
EXISTING 6" UNDERDRAIN
REMOVE 45' PIPE

3 STA 63+51.3 LT TO 63+66.0 LT
EXISTING 18" CGMP W/ DI
REMOVE DI/ REMOVE 20' PIPE
CAP AND ABANDON REMAINING PIPE

PROPOSED DRAINAGE
1 STA 63+51.0 LT
NEW 18" X 15' CPEP(SL)
NEW 4' DIA. PRCCB
W/CI GRATE TYPE D AT 63+51.0

2 STA 62+18.0 RT TO 62+72.0 LT
NEW 6" X 91' UNDERDRAIN
INV IN = 691.15
INV OUT = 690.24

3 STA 63+03.0 TO 63+51.0 LT
NEW 6" X 51' UNDERDRAIN
INV IN = 690.26
INV OUT = 688.88
CONNECT TO NEW CB AT 63+51.0 LT

4 STA 63+38.0 LT TO 65+04.0 RT
NEW 6" X 180' UNDERDRAIN
INV IN = 686.34
INV OUT = 684.54

VT 2B CURVE (1)
BRG BK = S35°12'45.77"E
DELTA = 65°40'28" LT
D = 15°04'40"
R = 380.00'
T = 245.24'
L = 435.57'
E = 72.27'
BANK = 0.040

VT 2B CURVE (2)
PT STA 66+63.65
DELTA = 11°21'06" RT
D = 5°21'17"
R = 1070.00'
T = 106.34'
L = 211.99'
E = 5.27'
BANK = 0.029

LVRT CURVE (1)
PC STA 71+55.53
PI STA 76+69.64 BK =
PI STA 75+35.80 AHD
BRG BK = N 54°50'34.00"W
DELTA = 70°40'56" RT
D = 7°54'10"
R = 725.00'
T = 514.11'
L = 894.39'
E = 163.78'

MOORE, THOMAS E. & SHARON R. (1)

STATE OF VERMONT- LAMOILLE VALLEY RAIL TRAIL (FORMERLY LAMOILLE VALLEY RAILROAD)

BILLINGS, CRAIG M. & TRACEY (2)

N/F LOWREY, STEVEN

N/F REED, BRADLEY R.

WRIGHT, KAREN (3)

BRAZIL, ROBERT A. & BRIDGES, MELISSA L. (4)
D&C (T)

PHELPS, KATHERINE L. (5)
RELOCATE CURB STOP AND WATER SERVICE OUTSIDE LIMITS OF RETAINING WALL

TWO BEES, LLC. (6)

STATE OF VERMONT- LAMOILLE VALLEY RAIL TRAIL (FORMERLY LAMOILLE VALLEY RAILROAD)

BENCH MARK
CHISELED SQUARE ON BOUNDRY MARKER
ELEV= 703.27

VT STATE PLANE GRID

BEGIN R.O.W. PROJECT
BF 7000(20)
STA. 61+00.00, 0.00' CL

END R.O.W. PROJECT
BF 7000(20)
STA. 66+15.70, 91.72' RT

SEE STONE LINED DITCH DETAIL ON SHEET 4. SEE STONE LINED DITCH CROSS SECTIONS SHEET FOR CROSS SECTION AND ALIGNMENT INFORMATION

CONSTRUCT DRIVES
61+06 RT (24.0 FT WIDE, 4 FT PAVED APRON, RES.)
61+30 LT (24.0 FT WIDE, 4 FT PAVED APRON, RES.)
65+20 RT (13.5 FT WIDE, PAVED, RES.)
65+45 RT (9.7 FT WIDE, 6.5 FT PAVED APRON, RES.)

EXISTING BRIDGE DATA
THREE SPAN ROLLED BEAM, CONCRETE DECK BUILT 1936. 129' LENGTH, 42' MAX SPAN 26'-5" MIN UNDERCLEAR.

FOR ROW PURPOSES ONLY

LINES SHOWN ON THIS PLAN AS EXISTING PROPERTY LINES (P/L) ARE BELIEVED TO BE ACCURATE BUT SHOULD NOT BE RELIED UPON FOR PURPOSES UNRELATED TO THE STATE OF VERMONT ACQUISITION OF LAND AND RIGHTS FOR THIS PROJECT

(SCALE 1" = 20')

CONSULTING ENGINEERS

PROJECT NAME: ST. JOHNSBURY
PROJECT NUMBER: BF 7000(20)

FILE NAME: z86e048bdrrow.dgn
PROJECT LEADER: J.BYATT
DESIGNED BY: M.HALEY
ROW LAYOUT SHEET 1

PLOT DATE: 8/4/2016
DRAWN BY: S. GOODWIN
CHECKED BY: P.SHEDD
SHEET 70 OF 70

CLD 14-0116

BRIDGE REPLACEMENT

ST JOHNSBURY, VT

VERMONT AGENCY OF TRANSPORTATION

SHEET NO.	DESCRIPTION	REV A
36	TITLE PAGE	4/8/2016
37	GENERAL NOTES	4/8/2016
38	STRUCTURE SECTION & BACKFILL GEOMETRY	4/8/2016
39	STRUCTURE LAYOUT	4/8/2016
40	RIB PLATE LAYOUT	4/8/2016
41	STRUCTURE BILL OF MATERIALS	4/8/2016
42	GENERAL DETAILS	4/8/2016

REVIEW AND APPROVAL

APPROVED	APPROVED AS NOTED	REVISE & RESUBMIT
☐	☐	☐
☐	☐	☐
☐	☐	☐
☐	☐	☐
☐	☐	☐
☐	☐	☐
☐	☐	☐

REVIEWED BY:

COMPANY:

DATE:

PLEASE CHECK ONE BOX FOR EACH SHEET AND ADD COMMENTS AS NEEDED ON APPROPRIATE SHEETS

REV	STATUS	BY	DATE
A	ISSUED FOR APPROVAL	MMA	4/8/2016

PROPRIETARY AND CONFIDENTIAL

INFORMATION IN THIS DRAWING IS THE SOLE PROPERTY OF BIG-R BRIDGE. ANY REPRODUCTION IN PART OR AS A WHOLE WITHOUT WRITTEN PERMISSION IS STRICTLY PROHIBITED.

BIG R BRIDGE

P.O. Box 1290 • Greeley, Colorado 80632-1290
(970) 356-9600 • Fax:(970) 356-9621 • www.bigrbridge.com

BRIDGE REPLACEMENT
ST JOHNSBURY, VT
VERMONT AGENCY OF TRANSPORTATION
SUPER COR ARCH

REFERENCE DRAWINGS
NOT FOR CONSTRUCTION

SP15-00388

DESIGN BY JAH

DRAWN BY JMN

CHECKED BY JAH

SHEET NO. 1 OF 6

K:\2015\SP\SP15-00388\SP15-00388-SC revised numbering 12-8-15 updated notes 02-04-16.dwg

BIG R BRIDGE
CUSTOM SUPER COR ARCH
62S PERIPHERY, END AREA ~ 1074.5 ft²

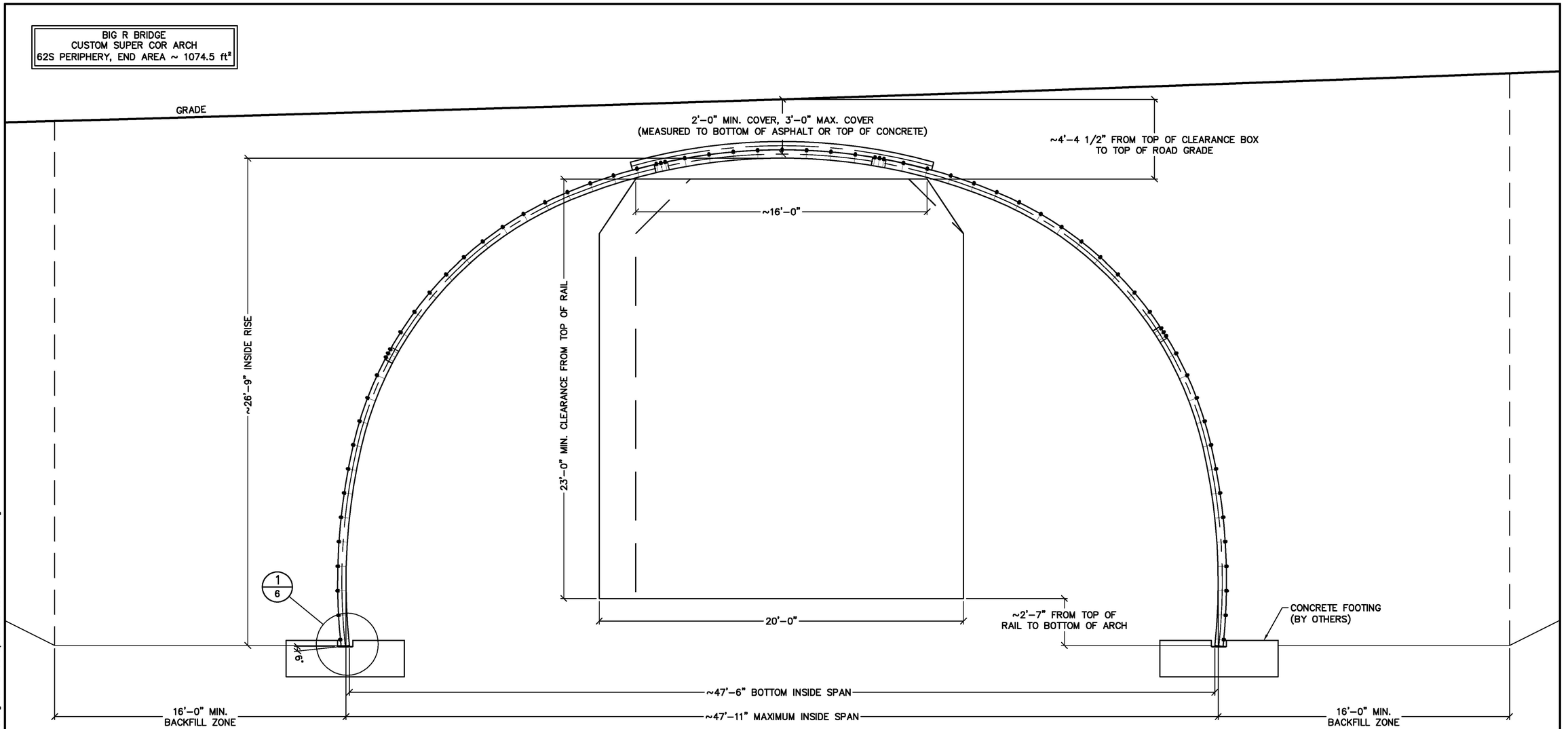

UNFACTORED FOOTING REACTIONS			
		VERTICAL	HORIZONTAL
2'–0" COVER	DEAD	16.3 kip/ft.	–1.7 kip/ft.
	LIVE	7.7 kip/ft.	–0.8 kip/ft.
3'–0" COVER	DEAD	21.2 kip/ft.	–2.2 kip/ft.
	LIVE	5.7 kip/ft.	–0.6 kip/ft.

REV	STATUS	BY	DATE
A	ISSUED FOR APPROVAL	MMA	4/8/2016

PROPRIETARY AND CONFIDENTIAL

INFORMATION IN THIS DRAWING IS THE SOLE PROPERTY OF BIG-R BRIDGE. ANY REPRODUCTION IN PART OR AS A WHOLE WITHOUT WRITTEN PERMISSION IS STRICTLY PROHIBITED.

BIG R BRIDGE

P.O. Box 1290 • Greeley, Colorado 80632-1290
(970) 356-9600 • Fax:(970) 356-9621 • www.bigrbridge.com

BRIDGE REPLACEMENT
ST JOHNSBURY, VT

VERMONT AGENCY OF TRANSPORTATION
SUPER COR ARCH

REFERENCE DRAWINGS
NOT FOR CONSTRUCTION

SP15–00388/1

DESIGN BY JAH
DRAWN BY JMN
CHECKED BY JAH

SHEET NO. 2 OF 6

K:\2015\SP\SP15-00388\SP15-00388-SC revised numbering 12-8-15 updated notes 02-04-16.dwg

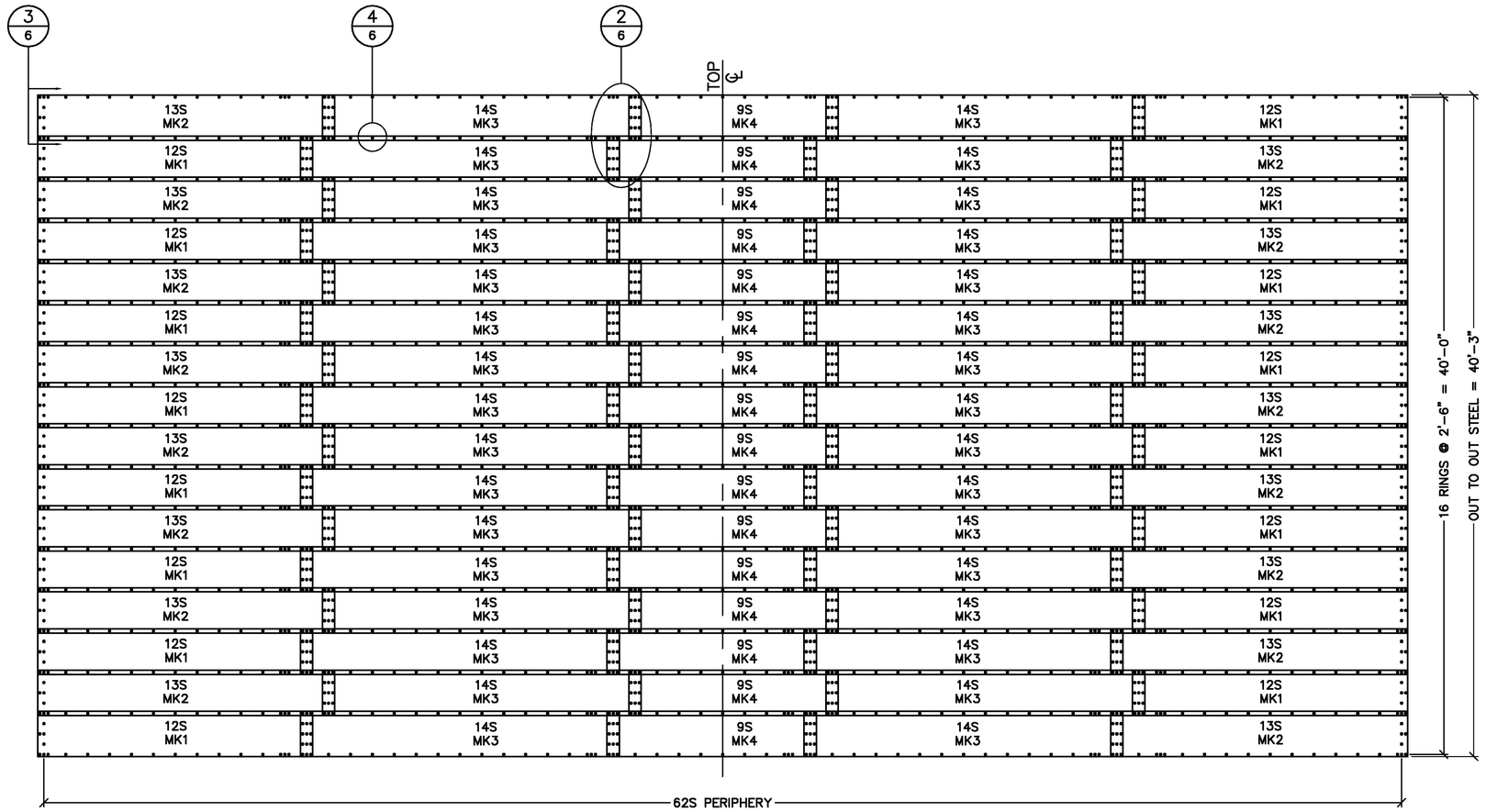

STRUCTURE LAYOUT – OUTSIDE FLAT VIEW

REV	STATUS	BY	DATE
A	ISSUED FOR APPROVAL	MMA	4/8/2016

PROPRIETARY AND CONFIDENTIAL

INFORMATION IN THIS DRAWING IS THE SOLE PROPERTY OF BIG-R BRIDGE. ANY REPRODUCTION IN PART OR AS A WHOLE WITHOUT WRITTEN PERMISSION IS STRICTLY PROHIBITED.

BIG R BRIDGE

P.O. Box 1290 • Greeley, Colorado 80632-1290
(970) 356-9600 • Fax:(970) 356-9621 • www.bigrbridge.com

BRIDGE REPLACEMENT

ST JOHNSBURY, VT

VERMONT AGENCY OF TRANSPORTATION
SUPER COR ARCH

REFERENCE DRAWINGS
NOT FOR CONSTRUCTION

SP15-00388/1

DESIGN BY JAH
DRAWN BY JMN
CHECKED BY JAH

SHEET NO. 3 OF 6

K:\2015\SP\SP15-00388\SP15-00388-SC revised numbering 12-8-15 updated notes 02-04-16.dwg

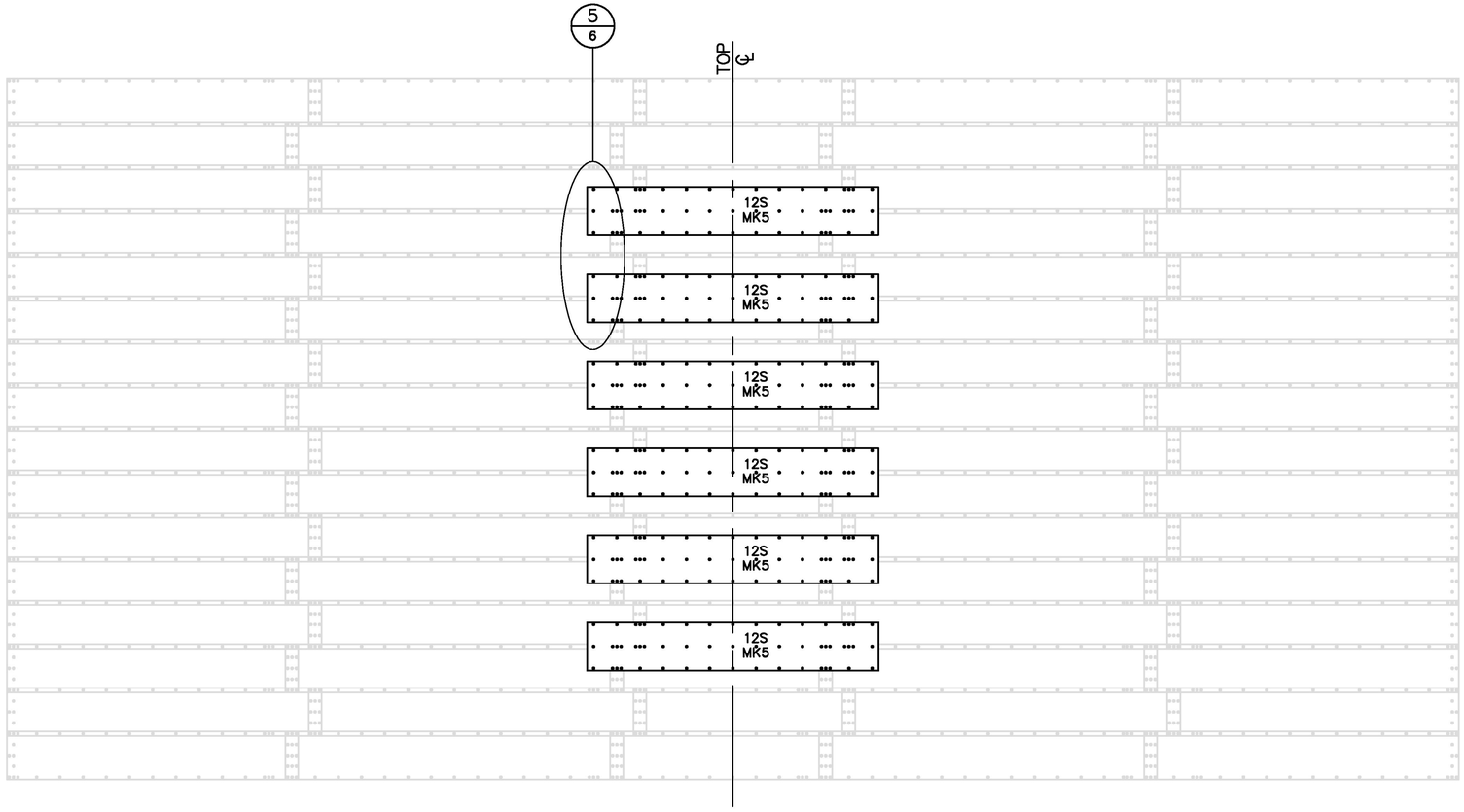

RIB PLATE LAYOUT – OUTSIDE FLAT VIEW

K:\2015\SP\SP15-00388\SP15-00388-SC revised numbering 12-8-15 updated notes 02-04-16.dwg

REV	STATUS	BY	DATE
A	ISSUED FOR APPROVAL	MMA	4/8/2016

PROPRIETARY AND CONFIDENTIAL

INFORMATION IN THIS DRAWING IS THE SOLE PROPERTY OF BIG-R BRIDGE. ANY REPRODUCTION IN PART OR AS A WHOLE WITHOUT WRITTEN PERMISSION IS STRICTLY PROHIBITED.

BIG R BRIDGE

P.O. Box 1290 • Greeley, Colorado 80632-1290
(970) 356-9600 • Fax:(970) 356-9621 • www.bigrbridge.com

BRIDGE REPLACEMENT

ST JOHNSBURY, VT

VERMONT AGENCY OF TRANSPORTATION
SUPER COR ARCH

REFERENCE DRAWINGS
NOT FOR CONSTRUCTION

SP15-00388/1

DESIGN BY JAH

DRAWN BY JMN

CHECKED BY JAH

SHEET NO. 4 OF 6

BILL OF MATERIALS

QTY	ITEM	THICKNESS	WIDTH/LENGTH	WEIGHT EACH	TOTAL WEIGHT	MK #	COLOR	NOTES
16	12S BASE PLATE	5 GA.	2'–6"	548 LBS	8,768 LBS	1	RED	
16	13S BASE PLATE	5 GA.	2'–6"	591 LBS	9,456 LBS	2	BLUE	
32	14S CROWN PLATE	5 GA.	2'–6"	635 LBS	20,320 LBS	3	GREEN	
16	9S CROWN PLATE	5 GA.	2'–6"	417 LBS	6672 LBS	4	YELLOW	
6	12S RIB PLATE	5 GA.	2'–6"	548 LBS	3,288 LBS	5	BLACK	
2,360	3/4"ø x 2" BOLT	3/4"ø	2"	0.39 LBS	920 LBS			INCLUDES EXTRA
200	3/4"ø x 3" BOLT	3/4"ø	3"	0.51 LBS	102 LBS			TO ASSIST ASSEMBLY
2,682	3/4"ø NUT	3/4"ø	–	0.19 LBS	510 LBS			INCLUDES EXTRA
122	3/4"ø x12"X4" AB	3/4"ø	9"	2.75 LBS	336LBS			FOR COLLAR
2	PRY BARS	–	–	15 LBS	30 LBS	–	–	
2	DRIFT PINS	–	–	15 LBS	30 LBS	–	–	
ESTIMATED TOTAL SHIPPING WEIGHT =					50,431 LBS			

NOTE: ALL BOLTS LISTED ARE ASTM A449.
ALL NUTS LISTED ARE ASTM A563.

REV	STATUS	BY	DATE
A	ISSUED FOR APPROVAL	MMA	4/8/2016

PROPRIETARY AND CONFIDENTIAL

INFORMATION IN THIS DRAWING IS THE SOLE PROPERTY OF BIG-R BRIDGE. ANY REPRODUCTION IN PART OR AS A WHOLE WITHOUT WRITTEN PERMISSION IS STRICTLY PROHIBITED.

BIG R BRIDGE

P.O. Box 1290 • Greeley, Colorado 80632-1290
(970) 356-9600 • Fax:(970) 356-9621 • www.bigrbridge.com

BRIDGE REPLACEMENT

ST JOHNSBURY, VT

VERMONT AGENCY OF TRANSPORTATION
SUPER COR ARCH

REFERENCE DRAWINGS
NOT FOR CONSTRUCTION

SP15–00388/1

DESIGN BY JAH
DRAWN BY JMN
CHECKED BY JAH

SHEET NO. 5 OF 6

K:\2015\SP\SP15-00388\SP15-00388-SC revised numbering 12-8-15 updated notes 02-04-16.dwg

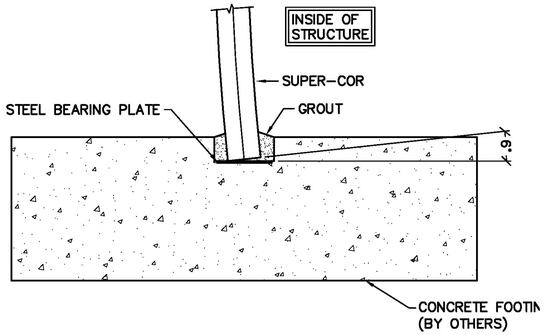

1/2 DETAIL

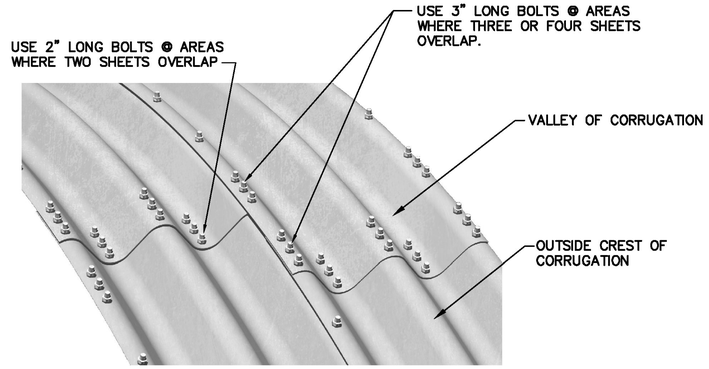

2/3 PLATE LAP DETAIL

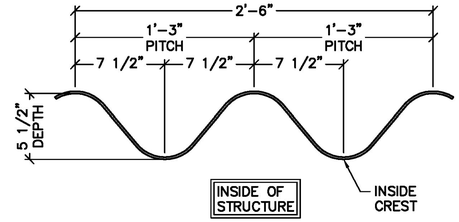

3/3 SUPER–COR BARREL PLATE CORRUGATION

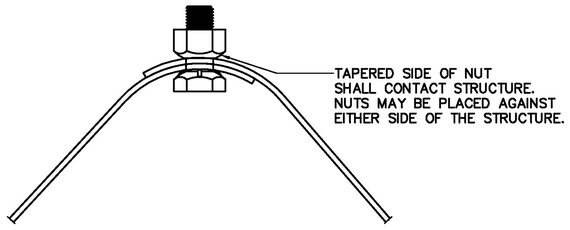

4/3 TYPICAL BOLTING DETAIL

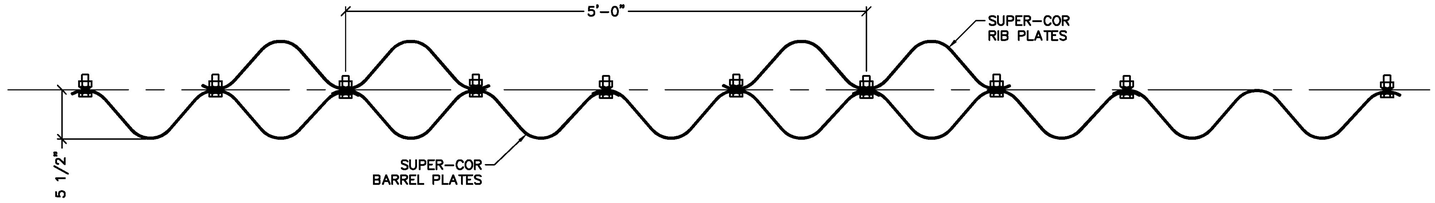

5/4 TYPICAL RIB PLATE DETAIL @ 50%

REV	STATUS	BY	DATE
A	ISSUED FOR APPROVAL	MMA	4/8/2016

PROPRIETARY AND CONFIDENTIAL

INFORMATION IN THIS DRAWING IS THE SOLE PROPERTY OF BIG-R BRIDGE. ANY REPRODUCTION IN PART OR AS A WHOLE WITHOUT WRITTEN PERMISSION IS STRICTLY PROHIBITED.

BIG R BRIDGE

P.O. Box 1290 • Greeley, Colorado 80632-1290
(970) 356-9600 • Fax:(970) 356-9621 • www.bigrbridge.com

BRIDGE REPLACEMENT

ST JOHNSBURY, VT

VERMONT AGENCY OF TRANSPORTATION
SUPER COR ARCH

REFERENCE DRAWINGS NOT FOR CONSTRUCTION

SP15–00388

DESIGN BY JAH

DRAWN BY JMN

CHECKED BY JAH

SHEET NO. 6 OF 6

K:\2015\SP\SP15-00388\SP15-00388-SC revised numbering 12-8-15 updated notes 02-04-16.dwg

4/8/2016 2:05 PM

VISTAWALL SYSTEMS

CONSTRUCTION DRAWINGS

VIST-A-WALL SEGMENTAL CONCRETE PANEL MSE RETAINING WALL SYSTEM

PROPOSED IMPROVEMENT BRIDGE PROJECT

TOWN OF ST. JOHNSBURY COUNTY OF CALEDONIA,

VT ROUTE 2B BRIDGE NO. 6

PREPARED FOR:

STATE OF VERMONT AGENCY OF TRANSPORTATION

DRAWING INDEX	
1	TITLE SHEET
2	ELEVATION OF WINGWALL NORTHEAST & NORTHWEST
3	ELEVATION OF WINGWALL SOUTHWEST & SOUTHEAST
4	ELEVATION DRIVE RETAINING WALL
5	TYPICAL SECTIONS
6	COPING SECTIONS & DETAILS
7	PLAN VIEW RETAINING WALLS NORTH & SOUTH
8	INSTALLATION DETAILS
9-16	STANDARD COMPONENT DETAILS

REV	DESCRIPTION	BY	DATE

PROPRIETARY AND CONFIDENTIAL

THIS DRAWING IS SOLE PROPERTY OF BIG R MANUFACTURING, LLC AND CONTAINS PROPRIETARY INFORMATION FOR USE WITH THIS PROJECT ONLY. ANY REPRODUCTION IN PART OR AS A WHOLE WITHOUT WRITTEN PERMISSION IS STRICTLY PROHIBITED.

BIG R BRIDGE

VISTAWALL SYSTEMS

P.O. Box 1290 • Greeley, Colorado 80632-1290

(970) 356-9600 • Fax:(970) 356-9621 • www.bigrbridge.com

PROPOSED IMPROVEMENT BRIDGE PROJECT
TOWN OF ST. JOHNSBURY COUNTY OF CALEDONIA
VT ROUTE 2B BRIDGE NO. 6

TITLE SHEET

SCP MSE RETAINING WALL
GRID-STRIP SOIL REINFORCING

THE DESIGN CONTAINED HEREIN IS BASED ON INFORMATION SUPPLIED BY OTHERS. BIG R BRIDGE IS CERTIFYING INTERNAL STABILITY OF THE STRUCTURE ONLY. EXTERNAL AND GLOBAL STABILITY REQUIREMENTS ARE THE RESPONSIBILITY OF OTHERS

REFERENCE DRAWINGS NOT FOR CONSTRUCTION

VW15-00388

DESIGNED BY CDA

DRAWN BY ARO

CHECKED BY CDA

SHEET NO. 1 OF 16

K:\2015\VW\2015-00388 St. Johnsbury, VT\2015-00388 BASE REVISED 4-8-16.dwg

4/8/2016 2:05 PM

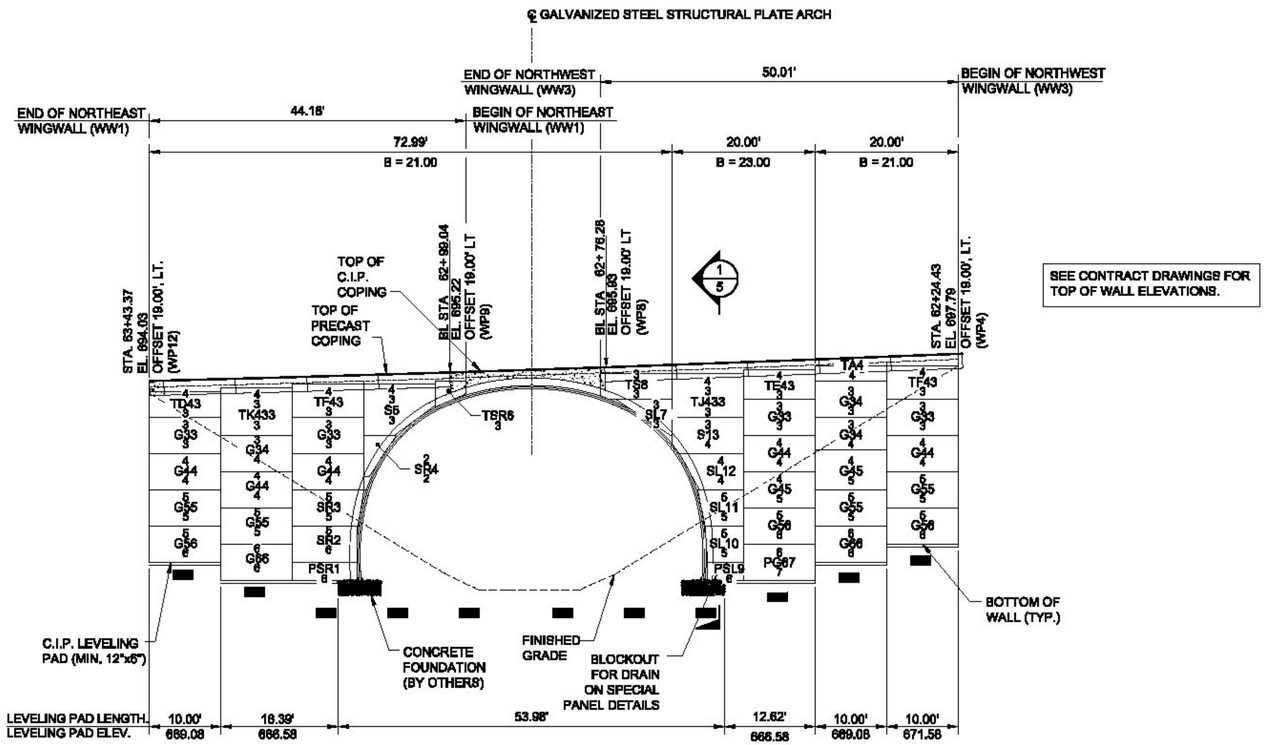

ELEVATION ~ RETAINING WALL NORTH

FRONT FACE

NOTES:

1. DIMENSIONS FOR WALLS ARE GIVEN ALONG FRONT FACE OF PANEL.
2. STATIONS AND OFFSETS ARE GIVEN TO FACE OF SPECIAL PROVISION.
3. ELEVATIONS ARE TO THE TOP OF COPING OR TOP OF LEVELING PAD.
4. REFERENCE CONTRACT DRAWINGS FOR LOCATION OF DRAINAGE STRUCTURES AND DETAILS NOT SHOWN HERE.
5. EXISTING GROUND MAY NOT BE SHOWN FOR CLARITY. REFERENCE CONTRACT DRAWINGS FOR LOCATION.
6. REFERENCE PANEL DETAILS AND PANEL SCHEDULES FOR SPECIFIC PANEL DETAILS.
7. PANEL FINISH WALL TO BE ROCKY MOUNTAIN FLAGSTONE.

SOIL REINFORCING SCHEDULE					
GRID-STRIP					
TYPE	LONG SIZE	TRAN SIZE	LONG SPACE	TRAN SPACE	SR WIDTH
GS11	W11.0	W11.0	0'-2"	1'-0"	3"

1. FABRICATION SPECIFICATIONS PER ASTM A1064 & A123
2. LENGTH OF SOIL REINFORCING = 8 GIVEN UNDER DIMENSION LINE

PANEL DEFINITION

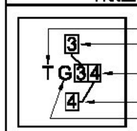

PANEL TYPE = G (5'-0" x 10'-0" x 8")
No. DPS ANCHORS ROW 1 = 3
No. DPS ANCHORS ROW 2 = 4
GRID-STRIP SOIL REINFORCING

PRECAST STANDARD PANEL SCHEDULE							
TYPE	PANEL LENGTH	PANEL HEIGHT	SR ROWS PER PANEL	TYPE	PANEL LENGTH	PANEL HEIGHT	SR ROWS PER PANEL
A	10'-0"	2'-0"	1	G	10'-0"	6'-0"	2
B	10'-0"	2'-6"	1	H	10'-0"	6'-6"	3
C	10'-0"	3'-0"	2	J	10'-0"	6'-0"	3
D	10'-0"	3'-6"	2	K	10'-0"	6'-6"	3
E	10'-0"	4'-0"	2	L	10'-0"	7'-0"	3
F	10'-0"	4'-6"	2	M	10'-0"	7'-6"	3

"T" - PANEL TYPE PREFIX DESIGNATES TOP PANEL.
"P" - PANEL TYPE PREFIX DESIGNATES BOTTOM PANEL.
"FG" - DOUBLE TYPE PREFIX DESIGNATES SLOPED PANEL.

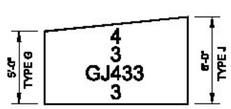

SLOPING PANEL ATTRIBUTE

REV	DESCRIPTION	BY	DATE

PROPRIETARY AND CONFIDENTIAL
THIS DRAWING IS SOLE PROPERTY OF BIG R MANUFACTURING, LLC AND CONTAINS PROPRIETARY INFORMATION FOR USE WITH THIS PROJECT ONLY. ANY REPRODUCTION IN PART OR AS A WHOLE WITHOUT WRITTEN PERMISSION IS STRICTLY PROHIBITED.

BIG R BRIDGE

VISTAWALL SYSTEMS

P.O. Box 1290 • Greeley, Colorado 80632-1290
(970) 356-9600 • Fax:(970) 356-9621 • www.bigrbridge.com

PROPOSED IMPROVEMENT BRIDGE PROJECT
TOWN OF ST. JOHNSBURY COUNTY OF CALEDONIA
VT ROUTE 2B BRIDGE NO. 6

RETAINING WALL NORTH ELEVATION

SCP MSE RETAINING WALL
GRID-STRIP SOIL REINFORCING

THE DESIGN CONTAINED HEREIN IS BASED ON INFORMATION SUPPLIED BY OTHERS. BIG R BRIDGE IS CERTIFYING INTERNAL STABILITY OF THE STRUCTURE ONLY. EXTERNAL AND GLOBAL STABILITY REQUIREMENTS ARE THE RESPONSIBILITY OF OTHERS

REFERENCE DRAWINGS
NOT FOR CONSTRUCTION

VW15-00388
DESIGNED BY CDA
DRAWN BY ARO
CHECKED BY CDA
SHEET NO. 2 OF 16

K:\2015\VW\2015-00388 St. Johnsbury, VT\2015-0038B BASE REVISED 4-8-16.dwg

4/8/2016 2:05 PM

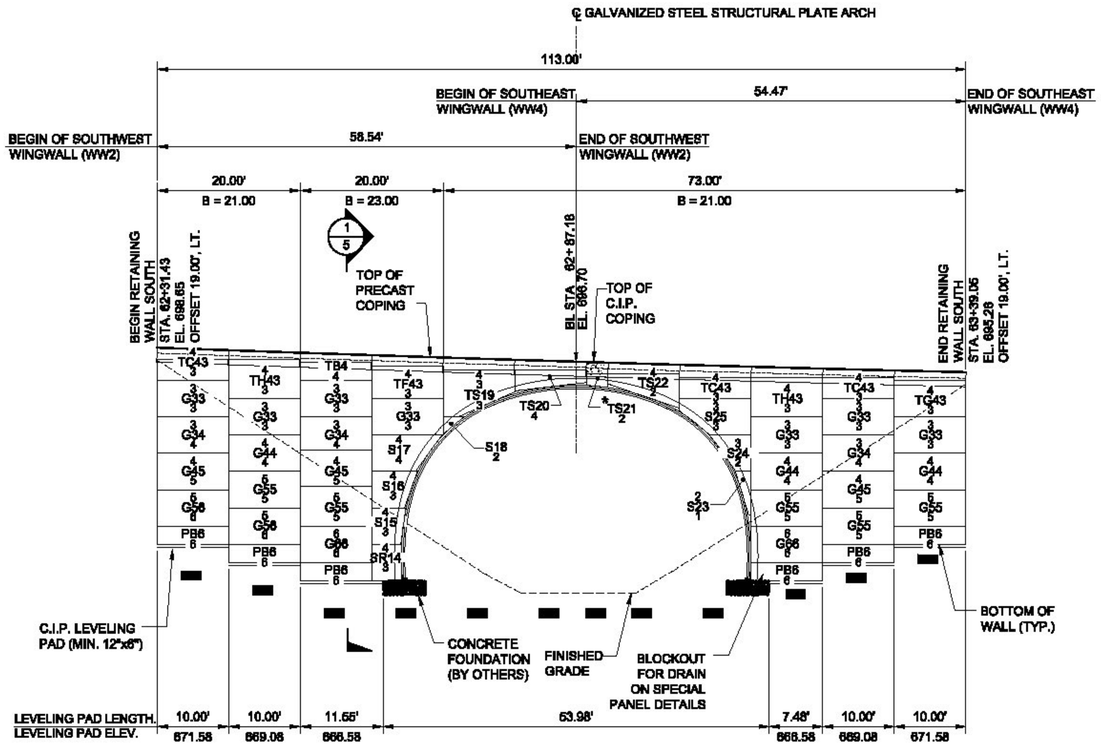

SEE CONTRACT DRAWINGS FOR TOP OF WALL ELEVATIONS.

*PANEL TS21 FIELD MEASURED PRIOR TO CASTING.

ELEVATION ~ RETAINING WALL SOUTH

FRONT FACE

NOTES:

1. DIMENSIONS FOR WALLS ARE GIVEN ALONG FRONT FACE OF PANEL.
2. STATIONS AND OFFSETS ARE GIVEN TO FACE OF SPECIAL PROVISION.
3. ELEVATIONS ARE TO THE TOP OF COPING OR TOP OF LEVELING PAD.
4. REFERENCE CONTRACT DRAWINGS FOR LOCATION OF DRAINAGE STRUCTURES AND DETAILS NOT SHOWN HERE.
5. EXISTING GROUND MAY NOT BE SHOWN FOR CLARITY. REFERENCE CONTRACT DRAWINGS FOR LOCATION.
6. REFERENCE PANEL DETAILS AND PANEL SCHEDULES FOR SPECIFIC PANEL DETAILS.
7. PANEL FINISH WALL TO BE ROCKY MOUNTAIN FLAGSTONE.

SOIL REINFORCING SCHEDULE					
GRID-STRIP					
TYPE	LONG SIZE	TRAN SIZE	LONG SPACE	TRAN SPACE	SR WIDTH
GS11	W11.0	W11.0	0'-2"	1'-0"	3"

1. FABRICATION SPECIFICATIONS PER ASTM A1064 & A123
2. LENGTH OF SOIL REINFORCING = B GIVEN UNDER DIMENSION LINE

PANEL DEFINITION

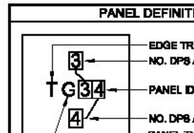

PANEL TYPE = G (5'-0" x 10'-0" x 8")
No. DPS ANCHORS ROW 1 = 3
No. DPS ANCHORS ROW 2 = 4
GRID-STRIP SOIL REINFORCING

PRECAST STANDARD PANEL SCHEDULE							
TYPE	PANEL LENGTH	PANEL HEIGHT	SR ROWS PER PANEL	TYPE	PANEL LENGTH	PANEL HEIGHT	SR ROWS PER PANEL
A	10'-0"	2'-0"	1	G	10'-0"	5'-0"	2
B	10'-0"	2'-8"	1	H	10'-0"	5'-6"	3
C	10'-0"	3'-0"	2	J	10'-0"	6'-0"	3
D	10'-0"	3'-8"	2	K	10'-0"	6'-6"	3
E	10'-0"	4'-0"	2	L	10'-0"	7'-0"	3
F	10'-0"	4'-8"	2	M	10'-0"	7'-6"	3

"T" - PANEL TYPE PREFIX DESIGNATES TOP PANEL
"P" - PANEL TYPE PREFIX DESIGNATES BOTTOM PANEL
"G" - DOUBLE TYPE PREFIX DESIGNATES SLOPED PANEL

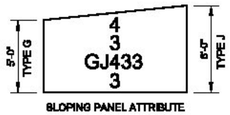

SLOPING PANEL ATTRIBUTE

REV	DESCRIPTION	BY	DATE

PROPRIETARY AND CONFIDENTIAL
THIS DRAWING IS SOLE PROPERTY OF BIG R MANUFACTURING, LLC AND CONTAINS PROPRIETARY INFORMATION FOR USE WITH THIS PROJECT ONLY. ANY REPRODUCTION IN PART OR AS A WHOLE WITHOUT WRITTEN PERMISSION IS STRICTLY PROHIBITED.

BIG R BRIDGE
VISTAWALL SYSTEMS
P.O. Box 1290 • Greeley, Colorado 80632-1290
(970) 356-9600 • Fax:(970) 356-9621 • www.bigrbridge.com

PROPOSED IMPROVEMENT BRIDGE PROJECT
TOWN OF ST. JOHNSBURY COUNTY OF CALEDONIA
VT ROUTE 2B BRIDGE NO. 6

RETAINING WALL SOUTH ELEVATION

SCP MSE RETAINING WALL
GRID-STRIP SOIL REINFORCING

THE DESIGN CONTAINED HEREIN IS BASED ON INFORMATION SUPPLIED BY OTHERS. BIG R BRIDGE IS CERTIFYING INTERNAL STABILITY OF THE STRUCTURE ONLY. EXTERNAL AND GLOBAL STABILITY REQUIREMENTS ARE THE RESPONSIBILITY OF OTHERS

REFERENCE DRAWINGS NOT FOR CONSTRUCTION

VW15-00388
DESIGNED BY CDA
DRAWN BY ARO
CHECKED BY CDA
SHEET NO. 3 OF 16

K:\2015\VW\2015-00388 St. Johnsbury, VT\2015-00388 BASE REVISED 4-8-16.dwg

4/8/2016 2:05 PM

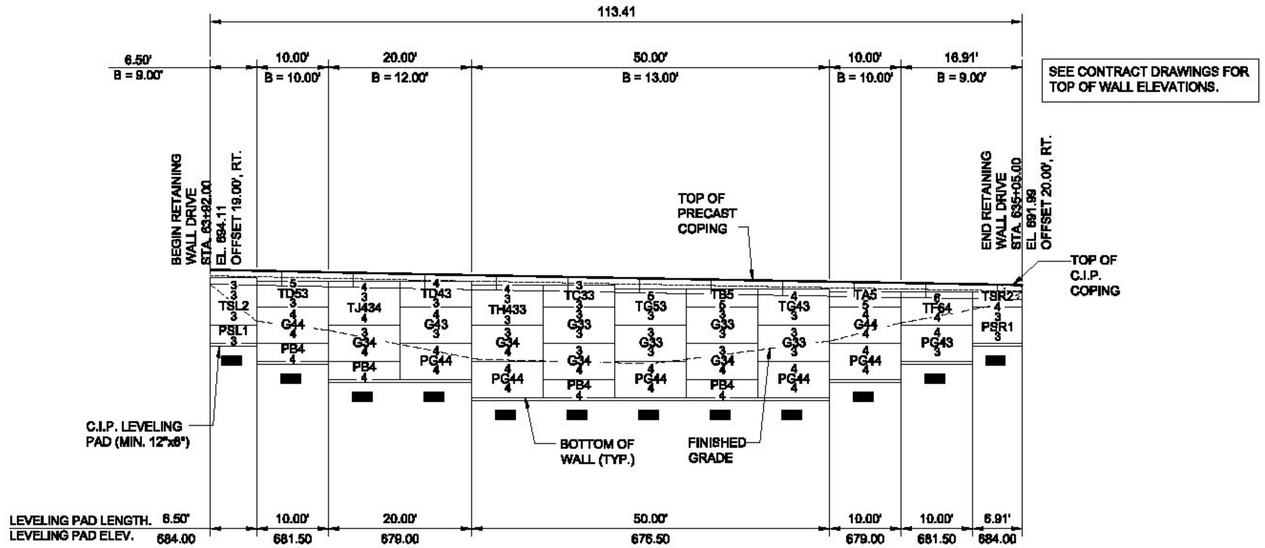

ELEVATION ~ DRIVE RETAINING WALL

FRONT FACE

NOTES:

1. DIMENSIONS FOR WALLS ARE GIVEN ALONG FRONT FACE OF PANEL.
2. STATIONS AND OFFSETS ARE GIVEN TO FACE OF SPECIAL PROVISION.
3. ELEVATIONS ARE TO THE TOP OF COPING OR TOP OF LEVELING PAD.
4. REFERENCE CONTRACT DRAWINGS FOR LOCATION OF DRAINAGE STRUCTURES AND DETAILS NOT SHOWN HERE.
5. EXISTING GROUND MAY NOT BE SHOWN FOR CLARITY. REFERENCE CONTRACT DRAWINGS FOR LOCATION.
6. REFERENCE PANEL DETAILS AND PANEL SCHEDULES FOR SPECIFIC PANEL DETAILS.
7. PANEL FINISH WALL TO BE ROCKY MOUNTAIN FLAGSTONE.

SOIL REINFORCING SCHEDULE

GRID-STRIP					
TYPE	LONG SIZE	TRAN SIZE	LONG SPACE	TRAN SPACE	SR WIDTH
GS11	W11.0	W11.0	0'-2"	1'-0"	3"

1. FABRICATION SPECIFICATIONS PER ASTM A1064 & A123
2. LENGTH OF SOIL REINFORCING = B GIVEN UNDER DIMENSION LINE

PANEL DEFINITION

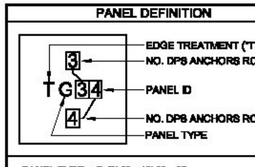

PANEL TYPE = G (5'-0" x 10'-0" x 8")
No. DPS ANCHORS ROW 1 = 3
No. DPS ANCHORS ROW 2 = 4
GRID-STRIP SOIL REINFORCING

PRECAST STANDARD PANEL SCHEDULE

TYPE	PANEL LENGTH	PANEL HEIGHT	SR ROWS PER PANEL	TYPE	PANEL LENGTH	PANEL HEIGHT	SR ROWS PER PANEL
A	10'-0"	2'-0"	1	G	10'-0"	5'-0"	2
B	10'-0"	2'-8"	1	H	10'-0"	5'-6"	3
C	10'-0"	3'-0"	2	J	10'-0"	6'-0"	3
D	10'-0"	3'-8"	2	K	10'-0"	6'-6"	3
E	10'-0"	4'-0"	2	L	10'-0"	7'-0"	3
F	10'-0"	4'-8"	2	M	10'-0"	7'-6"	3

"T" - PANEL TYPE PREFIX DESIGNATES TOP PANEL
"P" - PANEL TYPE PREFIX DESIGNATES BOTTOM PANEL
"G" - DOUBLE TYPE PREFIX DESIGNATES SLOPED PANEL

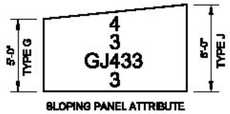

SLOPING PANEL ATTRIBUTE

REV	DESCRIPTION	BY	DATE

PROPRIETARY AND CONFIDENTIAL
THIS DRAWING IS SOLE PROPERTY OF BIG R MANUFACTURING, LLC AND CONTAINS PROPRIETARY INFORMATION FOR USE WITH THIS PROJECT ONLY. ANY REPRODUCTION IN PART OR AS A WHOLE WITHOUT WRITTEN PERMISSION IS STRICTLY PROHIBITED.

BIG R BRIDGE
VISTAWALL SYSTEMS
P.O. Box 1290 • Greeley, Colorado 80632-1290
(970) 356-9600 • Fax:(970) 356-9621 • www.bigrbridge.com

PROPOSED IMPROVEMENT BRIDGE PROJECT
TOWN OF ST. JOHNSBURY COUNTY OF CALEDONIA
VT ROUTE 2B BRIDGE NO. 6

RETAINING WALL DRIVE ELEVATION

SCP MSE RETAINING WALL
GRID-STRIP SOIL REINFORCING

THE DESIGN CONTAINED HEREIN IS BASED ON INFORMATION SUPPLIED BY OTHERS. BIG R BRIDGE IS CERTIFYING INTERNAL STABILITY OF THE STRUCTURE ONLY. EXTERNAL AND GLOBAL STABILITY REQUIREMENTS ARE THE RESPONSIBILITY OF OTHERS

REFERENCE DRAWINGS NOT FOR CONSTRUCTION

VW15-00388
DESIGNED BY CDA
DRAWN BY ARO
CHECKED BY CDA
SHEET NO. 4 OF 16

K:\2015\VW\2015-00388 St. Johnsbury, VT\2015-00388 BASE REVISED 4-8-16.dwg

4/8/2016 2:05 PM

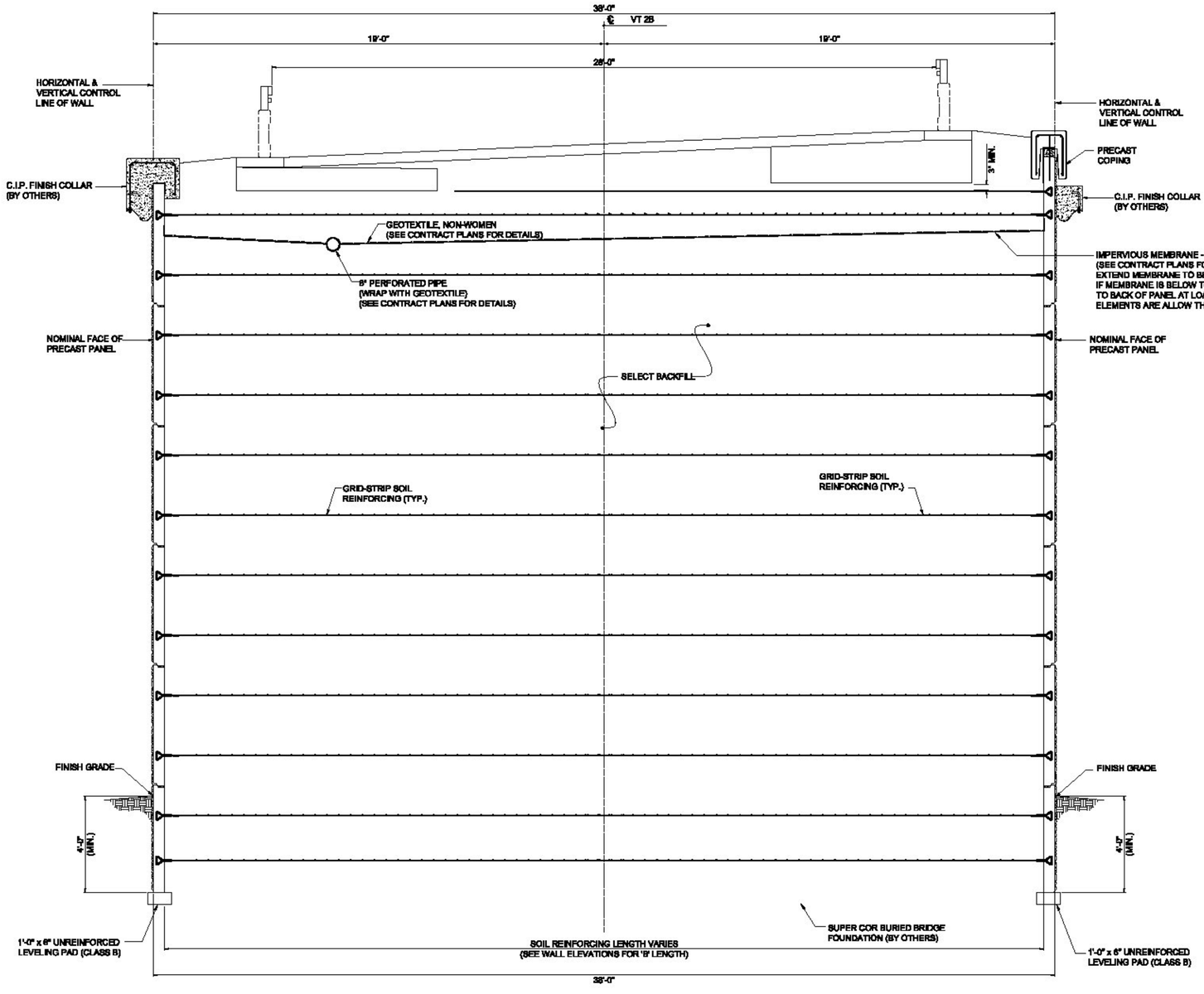

1/5 TYPICAL MSE WALL SECTION
SECTION VIEW

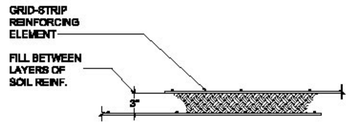

2/5 GRID STRIP OVERLAP DETAIL
DETAIL

REV	DESCRIPTION	BY	DATE

PROPRIETARY AND CONFIDENTIAL
THIS DRAWING IS SOLE PROPERTY OF BIG R MANUFACTURING, LLC AND CONTAINS PROPRIETARY INFORMATION FOR USE WITH THIS PROJECT ONLY. ANY REPRODUCTION IN PART OR AS A WHOLE WITHOUT WRITTEN PERMISSION IS STRICTLY PROHIBITED.

BIG R BRIDGE
VISTAWALL SYSTEMS
P.O. Box 1290 • Greeley, Colorado 80632-1290
(970) 356-9600 • Fax:(970) 356-9621 • www.bigrbridge.com

PROPOSED IMPROVEMENT BRIDGE PROJECT
TOWN OF ST. JOHNSBURY COUNTY OF CALEDONIA
VT ROUTE 2B BRIDGE NO. 6

TYPICAL SECTIONS

SCP MSE RETAINING WALL
GRID-STRIP SOIL REINFORCING

THE DESIGN CONTAINED HEREIN IS BASED ON INFORMATION SUPPLIED BY OTHERS. BIG R BRIDGE IS CERTIFYING INTERNAL STABILITY OF THE STRUCTURE ONLY. EXTERNAL AND GLOBAL STABILITY REQUIREMENTS ARE THE RESPONSIBILITY OF OTHERS

REFERENCE DRAWINGS
NOT FOR CONSTRUCTION

VW15-00388
DESIGNED BY CDA
DRAWN BY ARO
CHECKED BY CDA
SHEET NO. 5 OF 16

K:\2015\VW\2015-00388 St. Johnsbury, VT\2015-00388 BASE REVISED 4-8-16.dwg

4/8/2016 2:05 PM

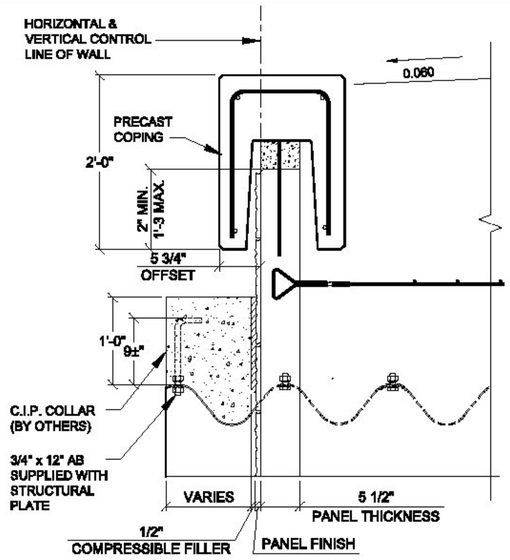

1/6 PRECAST COPING
SECTION VIEW

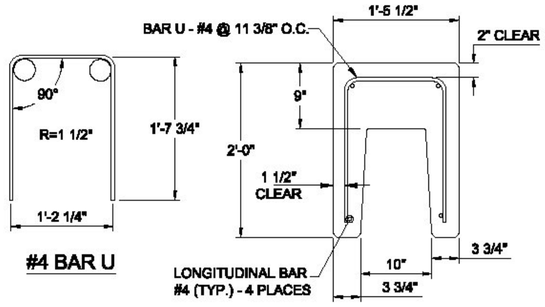

#4 BAR U

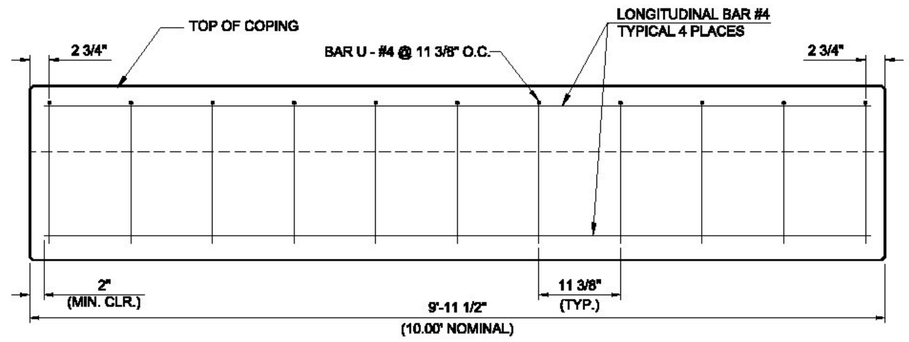

3/6 PRECAST COPING - REINFORCING PLACEMENT

NOTES:

1. ALL LONGITUDINAL BARS ARE #4 PLACED AS SHOWN WITH EQUAL SPACING.
2. ALL DIMENSIONS ARE TO CENTER OF BAR UNLESS OTHERWISE NOTED.
3. MINIMUM COMPRESSIVE STRENGTH OF CONCRETE SHALL BE 5000 PSI FOR PRECAST AND 3600 PSI FOR CAST IN PLACE.

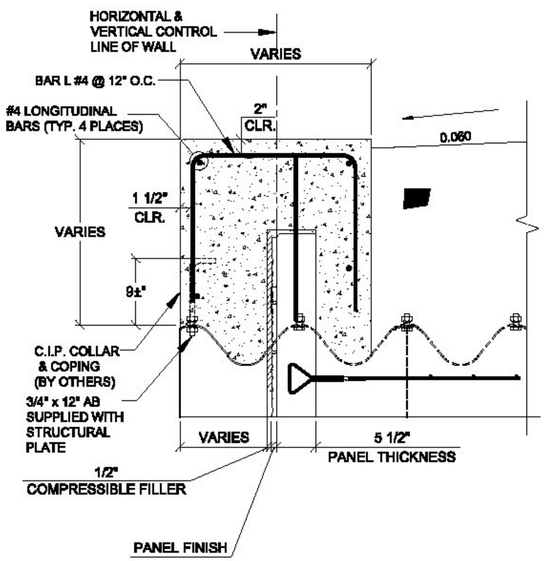

2/6 C.I.P. COPING
SECTION VIEW

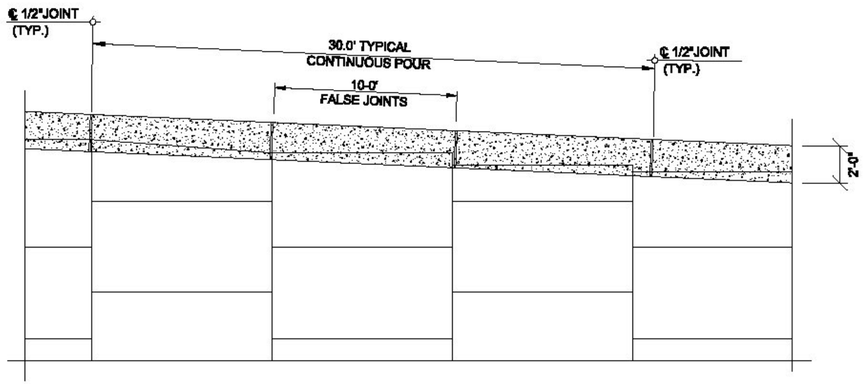

4/6 PARTIAL ELEV. C.I.P. COPING
SECTION VIEW

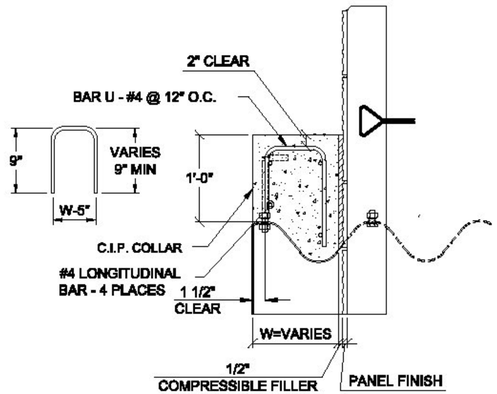

5/6 COLLAR REINFORCEING
SECTION VIEW

REV	DESCRIPTION	BY	DATE

PROPRIETARY AND CONFIDENTIAL
THIS DRAWING IS SOLE PROPERTY OF BIG R MANUFACTURING, LLC AND CONTAINS PROPRIETARY INFORMATION FOR USE WITH THIS PROJECT ONLY. ANY REPRODUCTION IN PART OR AS A WHOLE WITHOUT WRITTEN PERMISSION IS STRICTLY PROHIBITED.

BIG R BRIDGE
VISTAWALL SYSTEMS
P.O. Box 1290 • Greeley, Colorado 80632-1290
(970) 356-9600 • Fax:(970) 356-9621 • www.bigrbridge.com

PROPOSED IMPROVEMENT BRIDGE PROJECT
TOWN OF ST. JOHNSBURY COUNTY OF CALEDONIA
VT ROUTE 2B BRIDGE NO. 6

COPING SECTIONS & DETAILS

SCP MSE RETAINING WALL
GRID-STRIP SOIL REINFORCING

THE DESIGN CONTAINED HEREIN IS BASED ON INFORMATION SUPPLIED BY OTHERS. BIG R BRIDGE IS CERTIFYING INTERNAL STABILITY OF THE STRUCTURE ONLY. EXTERNAL AND GLOBAL STABILITY REQUIREMENTS ARE THE RESPONSIBILITY OF OTHERS

REFERENCE DRAWINGS
NOT FOR CONSTRUCTION

VW15-00388
DESIGNED BY CDA
DRAWN BY ARO
CHECKED BY CDA
SHEET NO. 6 OF 16

K:\2015\VW\2015-00388 St. Johnsbury, VT\2015-00388 BASE REVISED 4-8-16.dwg

4/8/2016 2:05 PM

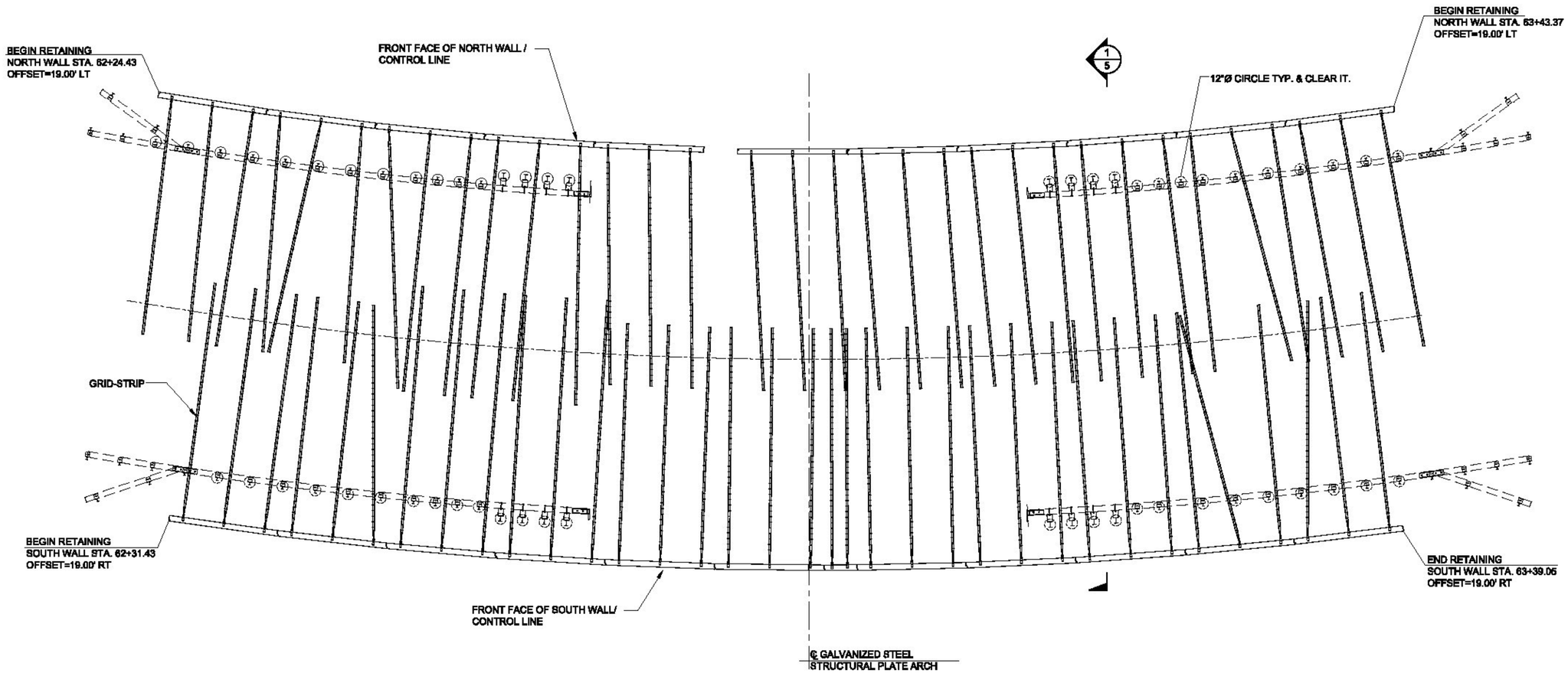

PLAN VIEW ~ RETAINING WALLS NORTH & SOUTH

REV	DESCRIPTION	BY	DATE

PROPRIETARY AND CONFIDENTIAL
THIS DRAWING IS SOLE PROPERTY OF BIG R MANUFACTURING, LLC AND CONTAINS PROPRIETARY INFORMATION FOR USE WITH THIS PROJECT ONLY. ANY REPRODUCTION IN PART OR AS A WHOLE WITHOUT WRITTEN PERMISSION IS STRICTLY PROHIBITED.

BIG R BRIDGE
VISTAWALL SYSTEMS
P.O. Box 1290 • Greeley, Colorado 80632-1290
(970) 356-9600 • Fax:(970) 356-9621 • www.bigrbridge.com

PROPOSED IMPROVEMENT BRIDGE PROJECT
TOWN OF ST. JOHNSBURY COUNTY OF CALEDONIA
VT ROUTE 2B BRIDGE NO. 6

COPING SECTIONS & DETAILS
SCP MSE RETAINING WALL
GRID-STRIP SOIL REINFORCING

THE DESIGN CONTAINED HEREIN IS BASED ON INFORMATION SUPPLIED BY OTHERS. BIG R BRIDGE IS CERTIFYING INTERNAL STABILITY OF THE STRUCTURE ONLY. EXTERNAL AND GLOBAL STABILITY REQUIREMENTS ARE THE RESPONSIBILITY OF OTHERS

REFERENCE DRAWINGS
NOT FOR CONSTRUCTION

VW15-00388
DESIGNED BY CDA
DRAWN BY ARO
CHECKED BY CDA
SHEET NO. 7 OF 16

K:\2015\VW\2015-00388 St. Johnsbury, VT\2015-00388 BASE REVISED 4-8-16.dwg

4/8/2016 2:05 PM

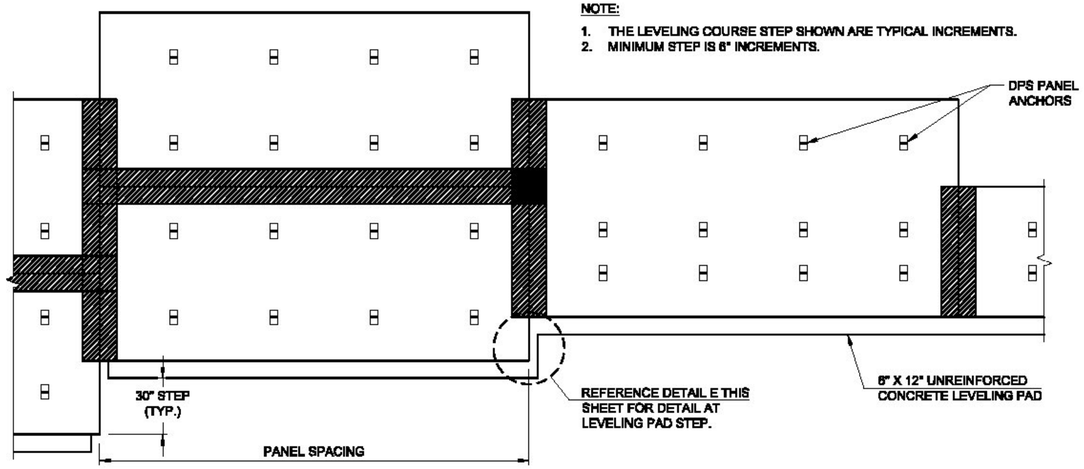

1/8 LEVELING PAD AND PANEL PLACEMENT
BACK FACE ELEVATION

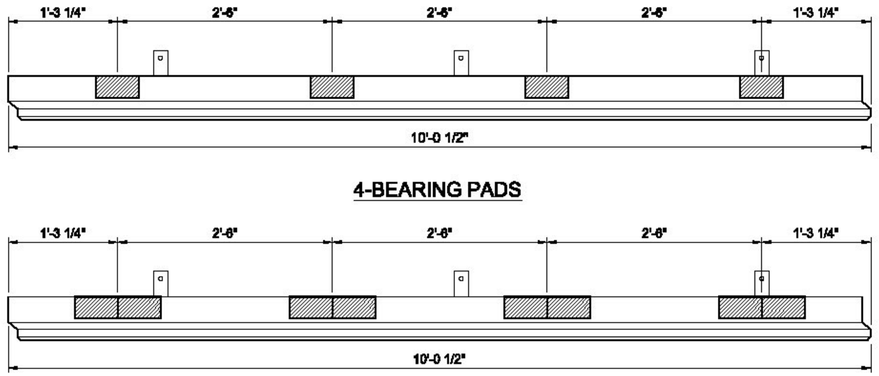

NOTE:
1. FOR WALL HEIGHTS THAT EXCEED 40 FEET USE 8 BEARING PADS PER PANEL AND PLACE SIDE BY SIDE.
2. WALL HEIGHT IS MEASURED FROM TOP OF LEVELING PAD TO TOP OF PANEL.
3. BEARING PAD IS 60 DUROMETER 3/4" x 3" x 6"

4/8 BEARING PAD PLACEMENT
PLAN VIEW AT TOP OF PANEL

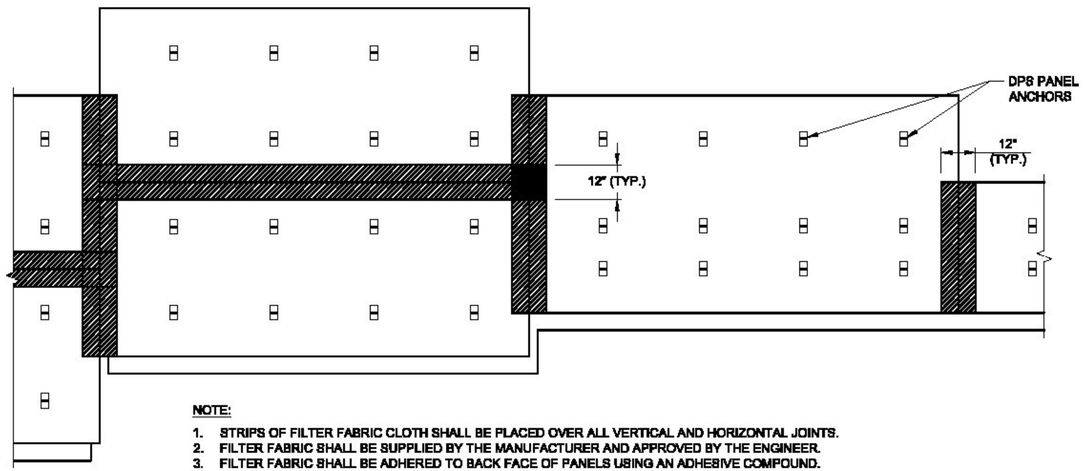

NOTE:
1. STRIPS OF FILTER FABRIC CLOTH SHALL BE PLACED OVER ALL VERTICAL AND HORIZONTAL JOINTS.
2. FILTER FABRIC SHALL BE SUPPLIED BY THE MANUFACTURER AND APPROVED BY THE ENGINEER.
3. FILTER FABRIC SHALL BE ADHERED TO BACK FACE OF PANELS USING AN ADHESIVE COMPOUND.
4. ADHESIVE SHALL BE APPLIED TO PANEL THEN FILTER FABRIC PLACED ON BACK OF PANEL.
5. THERE SHALL BE A 12" OVERLAP BETWEEN SPLICED FILTER FABRIC.
6. HORIZONTAL JOINT FABRIC SHALL BE EXTENDED 6" PASSED VERTICAL JOINT.

2/8 FILTER FABRIC PLACEMENT
BACK FACE ELEVATION

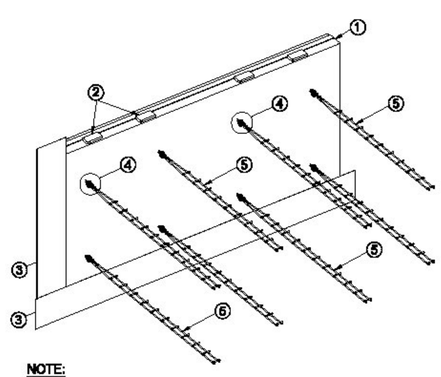

NOTE:
1. TYPICAL PRE-CAST PANEL WITH CAST-IN-PLACE ANCHORS
2. 60 DUROMETER 3" x 6" x 3/4" BEARING PADS - 2 PER PANEL (UNLESS NOTED OTHERWISE)
3. 12" WIDE FILTER FABRIC CLOTH ADHERE WITH ADHESIVE
4. 1/2" Ø A325 BOLT SET - 1 PER GRID-STRIP ELEMENT
5. GRID-STRIP ELEMENT (SIZE AS REQUIRED)
6. CONSTRUCTION ADHESIVE (NOT SHOWN) TO ATTACH FILTER FABRIC TO BACK FACE OF PANEL
7. HARD WOOD SHIMS (USE IF NECESSARY BY OTHERS - NOT SHOWN)

3/8 TYPICAL MATERIAL ISOMETRIC
STANDARD TYPE G PANEL

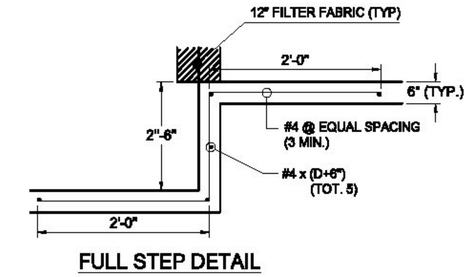

FULL STEP DETAIL

5/8 LEVELING PAD STEP DETAIL
BACK FACE ELEVATION

REV	DESCRIPTION	BY	DATE

PROPRIETARY AND CONFIDENTIAL
THIS DRAWING IS SOLE PROPERTY OF BIG R MANUFACTURING, LLC AND CONTAINS PROPRIETARY INFORMATION FOR USE WITH THIS PROJECT ONLY. ANY REPRODUCTION IN PART OR AS A WHOLE WITHOUT WRITTEN PERMISSION IS STRICTLY PROHIBITED.

BIG R BRIDGE
VISTAWALL SYSTEMS
P.O. Box 1290 • Greeley, Colorado 80632-1290
(970) 356-9600 • Fax:(970) 356-9621 • www.bigrbridge.com

PROPOSED IMPROVEMENT BRIDGE PROJECT
TOWN OF ST. JOHNSBURY COUNTY OF CALEDONIA
VT ROUTE 2B BRIDGE NO. 6

INSTALLATION DETAILS
SCP MSE RETAINING WALL
GRID-STRIP SOIL REINFORCING

THE DESIGN CONTAINED HEREIN IS BASED ON INFORMATION SUPPLIED BY OTHERS. BIG R BRIDGE IS CERTIFYING INTERNAL STABILITY OF THE STRUCTURE ONLY. EXTERNAL AND GLOBAL STABILITY REQUIREMENTS ARE THE RESPONSIBILITY OF OTHERS

REFERENCE DRAWINGS NOT FOR CONSTRUCTION

VW15-00388
DESIGNED BY CDA
DRAWN BY ARO
CHECKED BY CDA
SHEET NO. 8 OF 16

K:\2015\VW\2015-00388 St. Johnsbury, VT\2015-00388 BASE REVISED 4-8-16.dwg

4/8/2016 2:05 PM

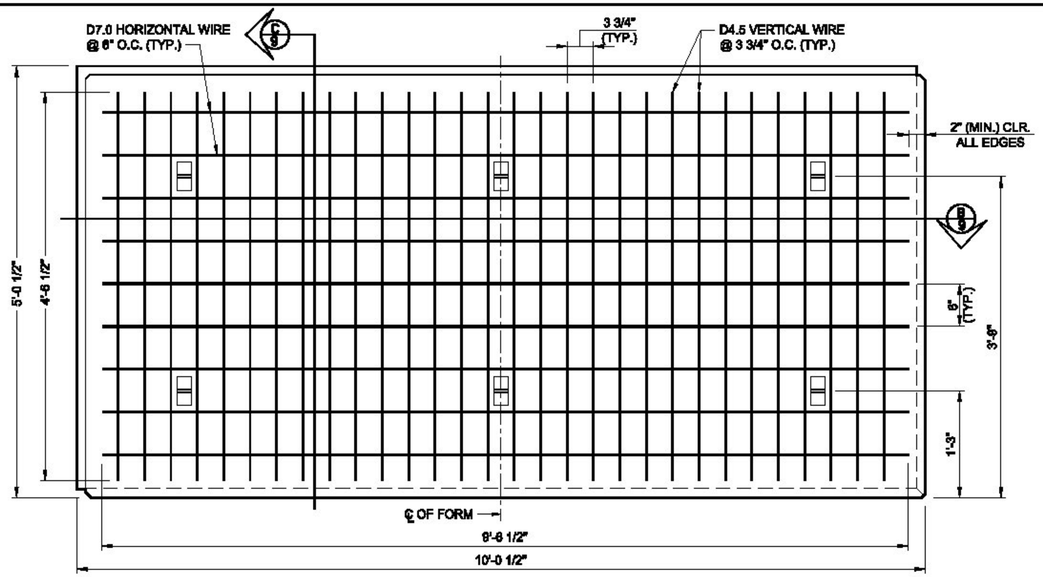

NOTE:
1. MINIMUM 2" COVER AT ALL EDGES
2. CENTER MESH IN FORM
3. TRIM AS REQUIRED
4. WWR COMPRISED OF D4.5 VERTICAL & D7.0 HORIZONTAL

A/9 STANDARD RECTANGULAR REINFORCEMENT
BACK FACE

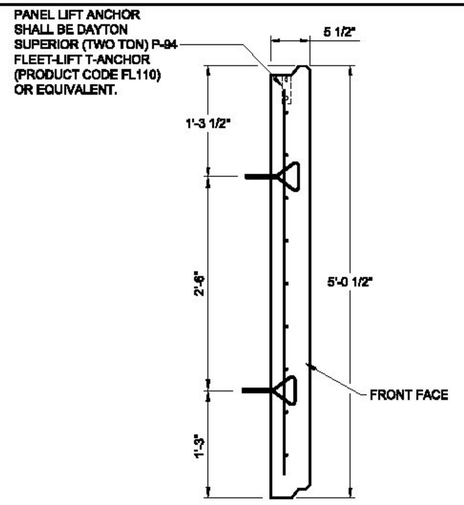

NOTE: THICKNESS OF PANEL SHALL INCREASE TO ACCOMMODATE ANY REQUIRED ARCHITECTURAL FINISH

C/9 STANDARD RECTANGULAR PANEL
SECTION VIEW

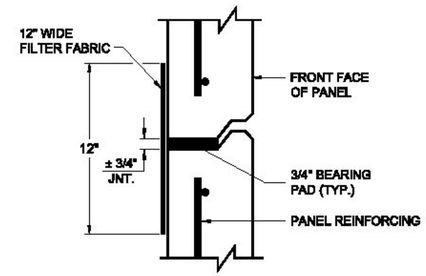

F/9 HORIZONTAL JOINT DETAIL - (TYP.)
PARTIAL SECTION

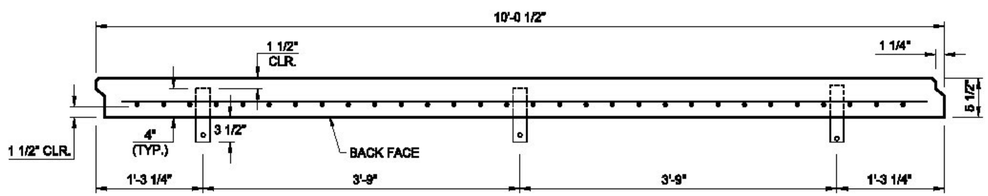

B/9 ANCHOR PLACEMENT
SECTION VIEW

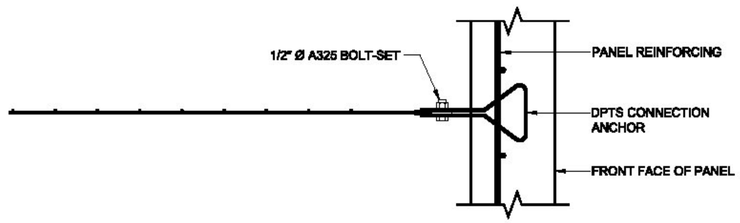

NOTE: BOLT-SET NUT SHALL ALWAYS BE INSTALLED ON TOP OF PANEL ANCHOR (AS SHOWN).

D/9 CONNECTION DETAIL (TYP.)
PARTIAL SECTION

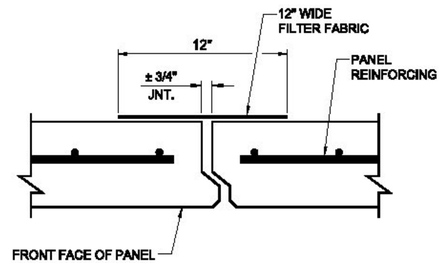

G/9 VERTICAL JOINT DETAIL - (TYP.)
PARTIAL SECTION

REV	DESCRIPTION	BY	DATE

PROPRIETARY AND CONFIDENTIAL
THIS DRAWING IS SOLE PROPERTY OF BIG R MANUFACTURING, LLC AND CONTAINS PROPRIETARY INFORMATION FOR USE WITH THIS PROJECT ONLY. ANY REPRODUCTION IN PART OR AS A WHOLE WITHOUT WRITTEN PERMISSION IS STRICTLY PROHIBITED.

BIG R BRIDGE
VISTAWALL SYSTEMS
P.O. Box 1290 • Greeley, Colorado 80632-1290
(970) 356-9600 • Fax:(970) 356-9621 • www.bigrbridge.com

PROPOSED IMPROVEMENT BRIDGE PROJECT
TOWN OF ST. JOHNSBURY COUNTY OF CALEDONIA
VT ROUTE 2B BRIDGE NO. 6

STANDARD COMPONENT DETAILS
SHEET 1 OF 8

SCP MSE RETAINING WALL
GRID-STRIP SOIL REINFORCING

THE DESIGN CONTAINED HEREIN IS BASED ON INFORMATION SUPPLIED BY OTHERS. BIG R BRIDGE IS CERTIFYING INTERNAL STABILITY OF THE STRUCTURE ONLY. EXTERNAL AND GLOBAL STABILITY REQUIREMENTS ARE THE RESPONSIBILITY OF OTHERS

REFERENCE DRAWINGS
NOT FOR CONSTRUCTION

VW15-00388
DESIGNED BY CDA
DRAWN BY ARO
CHECKED BY CDA
SHEET NO. 9 OF 16

K:\2015\VW\2015-00388 St. Johnsbury, VT\2015-00388 BASE REVISED 4-8-16.dwg

4/8/2016 2:05 PM

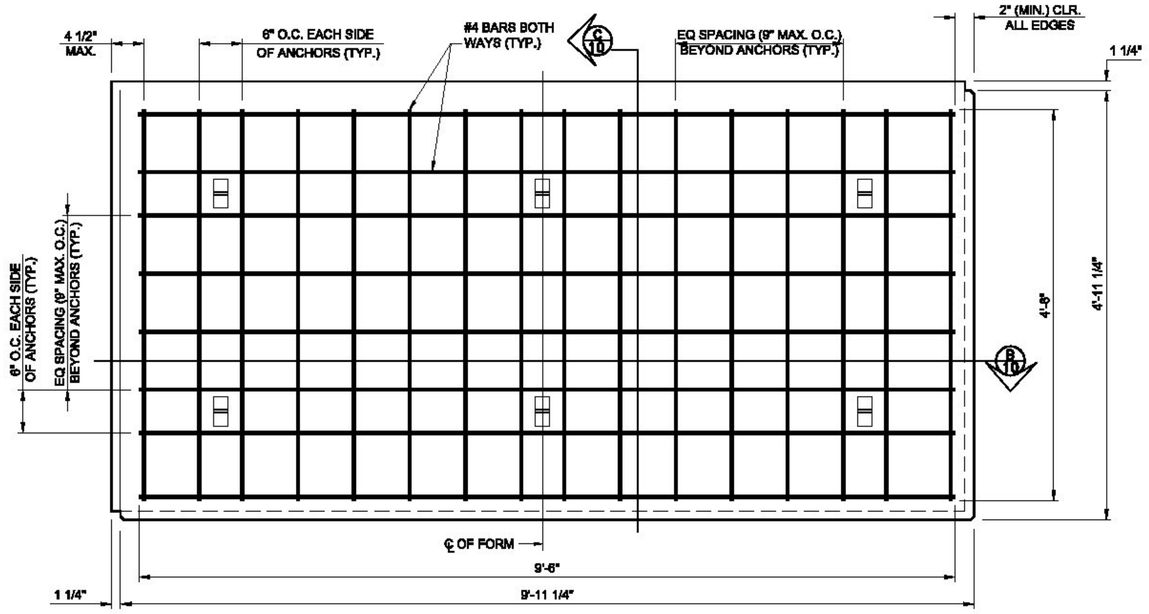

NOTE:

1. MINIMUM 2" COVER AT ALL EDGES.
2. CENTER REBAR IN FORM AT BACK OF PANEL.
3. TRIM AS REQUIRED.
4. MINIMUM #4 BAR BOTH WAYS.
5. TIE REBAR TOGETHER AT INTERSECTION POINTS.

A 10 OPTIONAL PANEL REINFORCEMENT
STANDARD

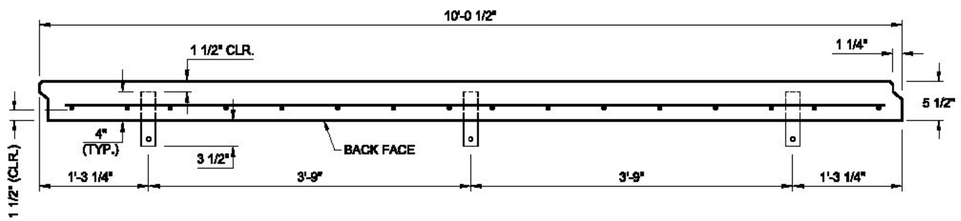

B 10 ANCHOR PLACEMENT
SECTION VIEW

PANEL LIFT ANCHOR SHALL BE DAYTON SUPERIOR (TWO TON) P-94 FLEET-LIFT T-ANCHOR (PRODUCT CODE FL110, HOT-DIPPED GALVANIZED) OR EQUIVALENT.

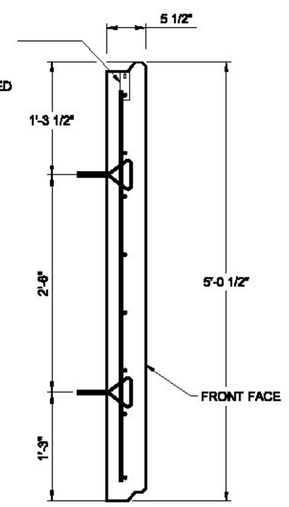

NOTE:

THICKNESS OF PANEL SHALL INCREASE TO ACCOMMODATE ANY REQUIRED ARCHITECTURAL FINISH.

C 10 STANDARD RECTANGULAR PANEL
SECTION VIEW

REV	DESCRIPTION	BY	DATE

PROPRIETARY AND CONFIDENTIAL
THIS DRAWING IS SOLE PROPERTY OF BIG R MANUFACTURING, LLC AND CONTAINS PROPRIETARY INFORMATION FOR USE WITH THIS PROJECT ONLY. ANY REPRODUCTION IN PART OR AS A WHOLE WITHOUT WRITTEN PERMISSION IS STRICTLY PROHIBITED.

BIG R BRIDGE
VISTAWALL SYSTEMS
P.O. Box 1290 • Greeley, Colorado 80632-1290
(970) 356-9600 • Fax:(970) 356-9621 • www.bigrbridge.com

PROPOSED IMPROVEMENT BRIDGE PROJECT
TOWN OF ST. JOHNSBURY COUNTY OF CALEDONIA
VT ROUTE 2B BRIDGE NO. 6

STANDARD COMPONENT DETAILS
SHEET 2 OF 8

SCP MSE RETAINING WALL
GRID-STRIP SOIL REINFORCING

THE DESIGN CONTAINED HEREIN IS BASED ON INFORMATION SUPPLIED BY OTHERS. BIG R BRIDGE IS CERTIFYING INTERNAL STABILITY OF THE STRUCTURE ONLY. EXTERNAL AND GLOBAL STABILITY REQUIREMENTS ARE THE RESPONSIBILITY OF OTHERS

REFERENCE DRAWINGS
NOT FOR CONSTRUCTION

VW15-00388
DESIGNED BY CDA
DRAWN BY ARO
CHECKED BY CDA
SHEET NO. 10 OF 16

K:\2015\VW\2015-00388 St. Johnsbury, VT\2015-00388 BASE REVISED 4-8-16.dwg

4/8/2016 2:05 PM

GRID-STRIP SOIL REINFORCING SCHEDULE						
TYPE	LONGITUDINAL BAR SIZE	TRANSVERSE BAR SIZE	LONGITUDINAL BAR SPACING	TRANSVERSE BAR SPACING	TRANSVERSE BAR WIDTH	NUMBER OF LONG BARS
GS11	W11.0	W11.0	0'-2"	1'-0"	0'-3"	2

NOTE:

1. SOIL REINFORCING SHALL BE MANUFACTURED IN ACCORDANCE WITH ASTM A1064
2. POSITIVE DEFORMED WIRE MAY BE SUBSTITUTED FOR SMOOTH "W" WIRE
3. THE SOIL REINFORCEMENT SCHEDULE IS DESIGN SPECIFIC AND MAY VARY SLIGHTLY BASED UPON THE SPECIFIC PROJECT DESIGN REQUIREMENTS.
4. AS WARRANTED BY DESIGN OR CONSTRUCTION REQUIREMENTS THERE MAY BE SEVERAL INDIVIDUAL SOIL REINFORCING ELEMENTS PER ROW.

A/11 GRID STRIP REINFORCING SCHEDULE

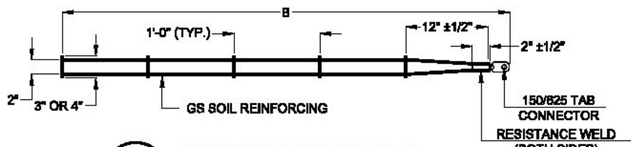

B/11 GRID STRIP DETAIL
PLAN VIEW

C/11 GRID STRIP DETAIL
PROFILE VIEW

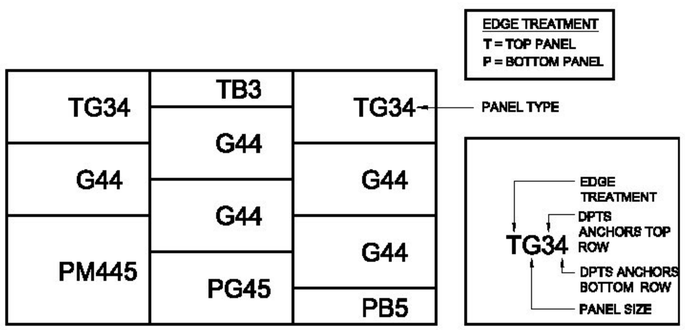

D/11 PANEL KEY
FRONT FACE WALL ELEVATION

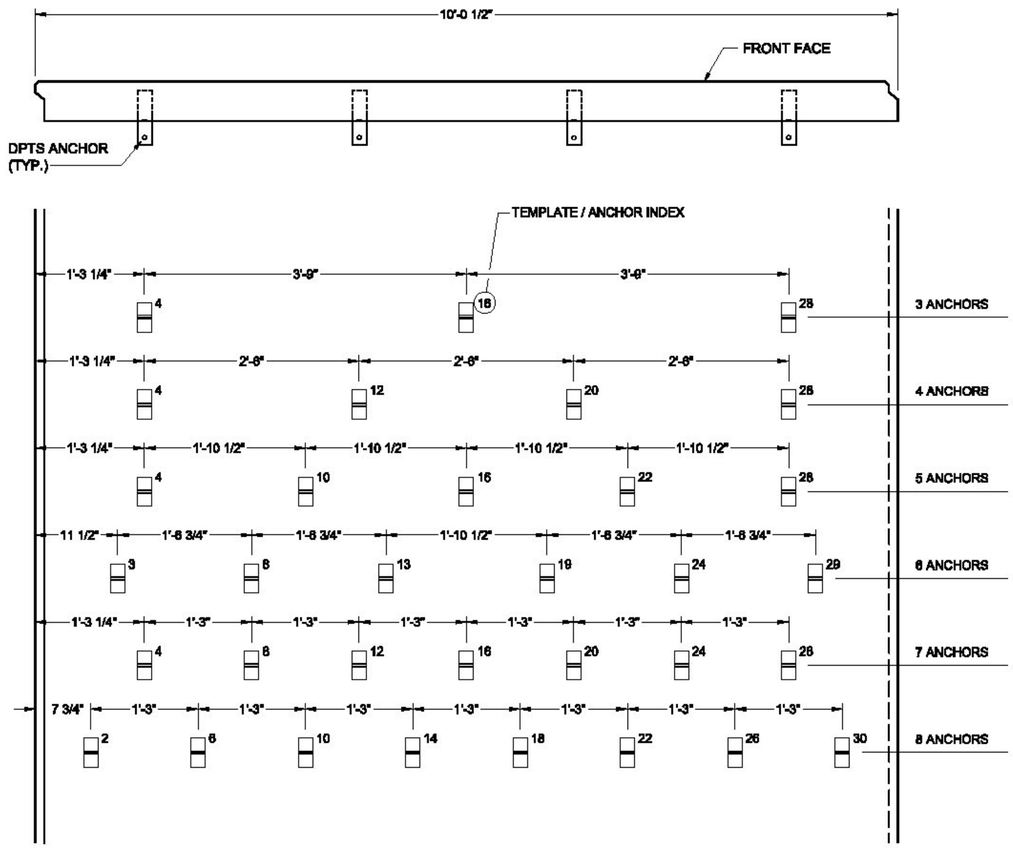

E/11 STANDARD ANCHOR PLACEMENT
BACK FACE ELEVATION

REV	DESCRIPTION	BY	DATE

PROPRIETARY AND CONFIDENTIAL
THIS DRAWING IS SOLE PROPERTY OF BIG R MANUFACTURING, LLC AND CONTAINS PROPRIETARY INFORMATION FOR USE WITH THIS PROJECT ONLY. ANY REPRODUCTION IN PART OR AS A WHOLE WITHOUT WRITTEN PERMISSION IS STRICTLY PROHIBITED.

BIG R BRIDGE
VISTAWALL SYSTEMS
P.O. Box 1290 • Greeley, Colorado 80632-1290
(970) 356-9600 • Fax:(970) 356-9621 • www.bigrbridge.com

PROPOSED IMPROVEMENT BRIDGE PROJECT
TOWN OF ST. JOHNSBURY COUNTY OF CALEDONIA
VT ROUTE 2B BRIDGE NO. 6

STANDARD COMPONENT DETAILS
SHEET 3 OF 8

SCP MSE RETAINING WALL
GRID-STRIP SOIL REINFORCING

THE DESIGN CONTAINED HEREIN IS BASED ON INFORMATION SUPPLIED BY OTHERS. BIG R BRIDGE IS CERTIFYING INTERNAL STABILITY OF THE STRUCTURE ONLY. EXTERNAL AND GLOBAL STABILITY REQUIREMENTS ARE THE RESPONSIBILITY OF OTHERS

REFERENCE DRAWINGS NOT FOR CONSTRUCTION

VW15-00388
DESIGNED BY CDA
DRAWN BY ARO
CHECKED BY CDA
SHEET NO. 11 OF 16

K:\2015\VW\2015-00388 St. Johnsbury, VT\2015-00388 BASE REVISED 4-8-16.dwg

4/8/2016 2:05 PM

4 - 24" DOWELS @ 1'-5 1/8" O.C. EMBEDED 12" (TYP.)

PANEL LIFT ANCHOR SHALL BE DAYTON SUPERIOR (TWO TON) P-94 FLEET-LIFT T-ANCHOR (PRODUCT CODE FL110, HOT-DIPPED GALVANIZED) OR EQUIVALENT.

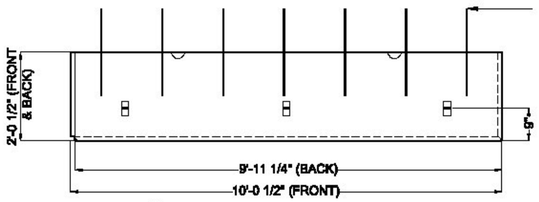

TA 12 TYPE 'TA' - 2'-0" PANEL (BACK FACE ELEVATION)

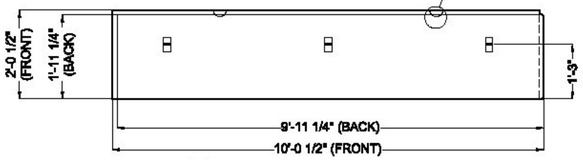

PA 12 TYPE 'PA' - 2'-0" PANEL (BACK FACE ELEVATION)

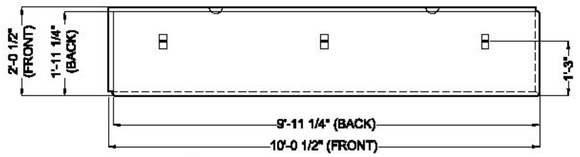

A 12 TYPE 'A' - 2'-0" PANEL (BACK FACE ELEVATION)

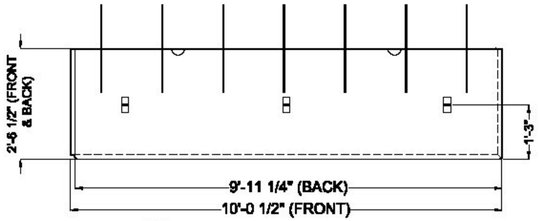

TB 12 TYPE 'TB' - 2'-6" PANEL (BACK FACE ELEVATION)

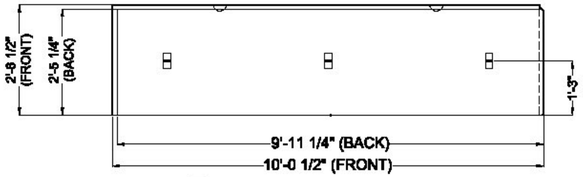

PB 12 TYPE 'PB' - 2'-6" PANEL (BACK FACE ELEVATION)

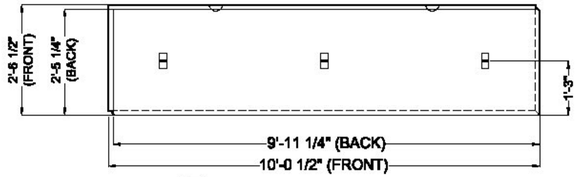

B 12 TYPE 'B' - 2'-6" PANEL (BACK FACE ELEVATION)

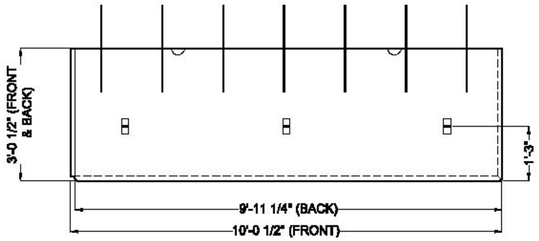

TC 12 TYPE 'TC' - 3'-0" PANEL (BACK FACE ELEVATION)

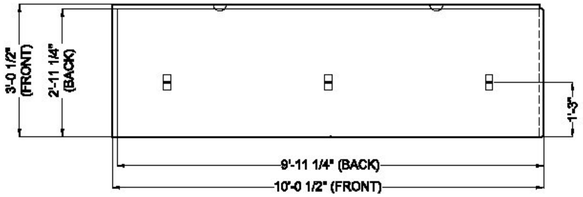

PC 12 TYPE 'PC' - 3'-0" PANEL (BACK FACE ELEVATION)

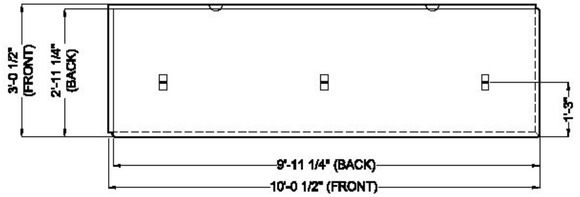

C 12 TYPE 'C' - 3'-0" PANEL (BACK FACE ELEVATION)

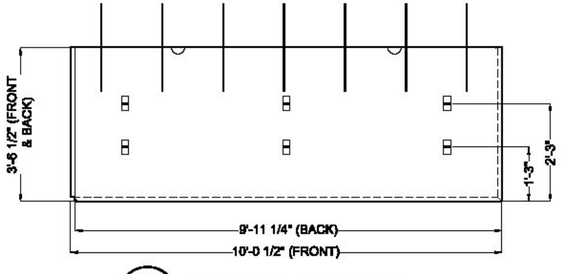

TD 12 TYPE 'TD' - 3'-6" PANEL (BACK FACE ELEVATION)

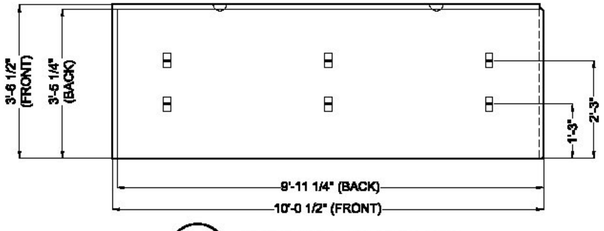

PD 12 TYPE 'PD' - 3'-6" PANEL (BACK FACE ELEVATION)

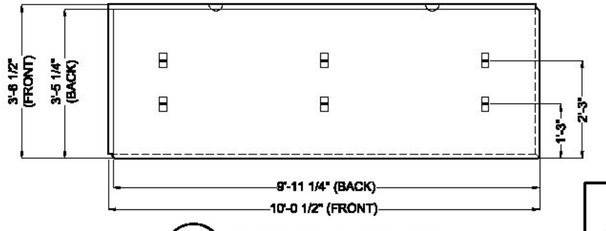

D 12 TYPE 'D' - 3'-6" PANEL (BACK FACE ELEVATION)

REV	DESCRIPTION	BY	DATE

PROPRIETARY AND CONFIDENTIAL
THIS DRAWING IS SOLE PROPERTY OF BIG R MANUFACTURING, LLC AND CONTAINS PROPRIETARY INFORMATION FOR USE WITH THIS PROJECT ONLY. ANY REPRODUCTION IN PART OR AS A WHOLE WITHOUT WRITTEN PERMISSION IS STRICTLY PROHIBITED.

BIG R BRIDGE
VISTAWALL SYSTEMS
P.O. Box 1290 • Greeley, Colorado 80632-1290
(970) 356-9600 • Fax:(970) 356-9621 • www.bigrbridge.com

PROPOSED IMPROVEMENT BRIDGE PROJECT
TOWN OF ST. JOHNSBURY COUNTY OF CALEDONIA
VT ROUTE 2B BRIDGE NO. 6

STANDARD COMPONENT DETAILS
SHEET 4 OF 8

SCP MSE RETAINING WALL
GRID-STRIP SOIL REINFORCING

THE DESIGN CONTAINED HEREIN IS BASED ON INFORMATION SUPPLIED BY OTHERS. BIG R BRIDGE IS CERTIFYING INTERNAL STABILITY OF THE STRUCTURE ONLY. EXTERNAL AND GLOBAL STABILITY REQUIREMENTS ARE THE RESPONSIBILITY OF OTHERS

REFERENCE DRAWINGS
NOT FOR CONSTRUCTION

VW15-00388
DESIGNED BY CDA
DRAWN BY ARO
CHECKED BY CDA
SHEET NO. 12 OF 16

K:\2015\VW\2015-00388 St. Johnsbury, VT\2015-00388 BASE REVISED 4-8-16.dwg

4/8/2016 2:05 PM

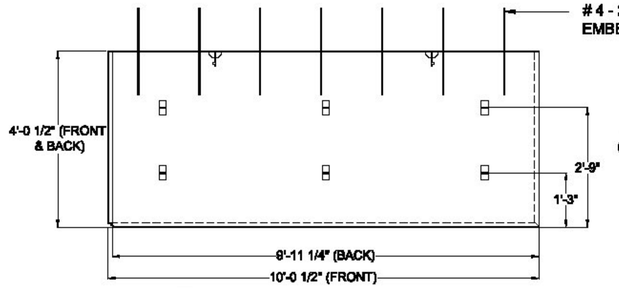

TE / 13 TYPE 'TE' - 4'-0" PANEL (BACK FACE ELEVATION)

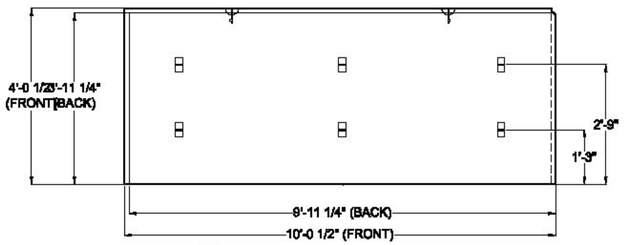

PE / 13 TYPE 'PE' - 4'-0" PANEL (BACK FACE ELEVATION)

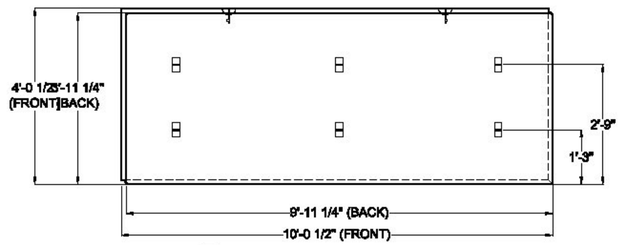

E / 13 TYPE 'E' - 4'-0" PANEL (BACK FACE ELEVATION)

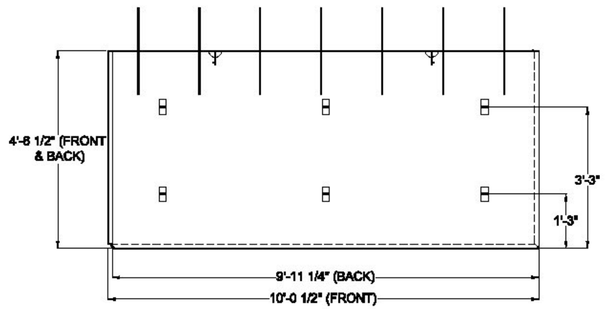

TF / 13 TYPE 'TF' - 4'-6" PANEL (BACK FACE ELEVATION)

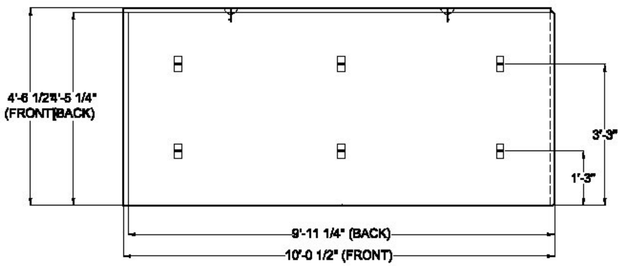

PF / 13 TYPE 'PF' - 4'-6" PANEL (BACK FACE ELEVATION)

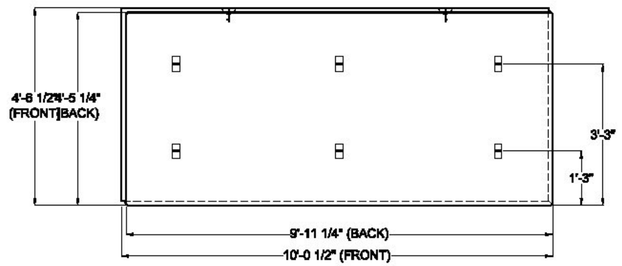

F / 13 TYPE 'F' - 4'-6" PANEL (BACK FACE ELEVATION)

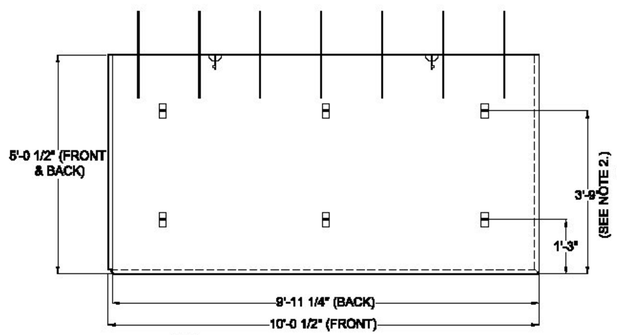

TG / 13 TYPE 'TG' - 5'-0" PANEL (BACK FACE ELEVATION)

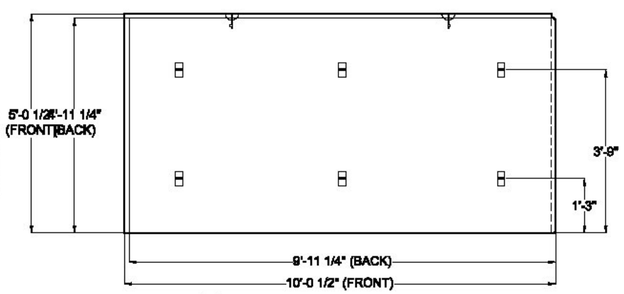

PG / 13 TYPE 'PG' - 5'-0" PANEL (BACK FACE ELEVATION)

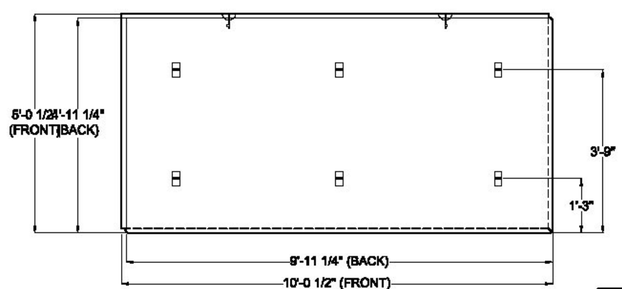

G / 13 TYPE 'G' - 5'-0" PANEL (BACK FACE ELEVATION)

NOTE: 'TG' AND 'PG' PANELS ARE TO BE CAST AS STANDARD 'G' PANELS.
TG & PG DETAILS ARE PROVIDED AS OPTIONS.

REV	DESCRIPTION	BY	DATE

PROPRIETARY AND CONFIDENTIAL
THIS DRAWING IS SOLE PROPERTY OF BIG R MANUFACTURING, LLC AND CONTAINS PROPRIETARY INFORMATION FOR USE WITH THIS PROJECT ONLY. ANY REPRODUCTION IN PART OR AS A WHOLE WITHOUT WRITTEN PERMISSION IS STRICTLY PROHIBITED.

BIG R BRIDGE
VISTAWALL SYSTEMS
P.O. Box 1290 • Greeley, Colorado 80632-1290
(970) 356-9600 • Fax:(970) 356-9621 • www.bigrbridge.com

PROPOSED IMPROVEMENT BRIDGE PROJECT
TOWN OF ST. JOHNSBURY COUNTY OF CALEDONIA
VT ROUTE 2B BRIDGE NO. 6

STANDARD COMPONENT DETAILS
SHEET 5 OF 8

SCP MSE RETAINING WALL
GRID-STRIP SOIL REINFORCING

THE DESIGN CONTAINED HEREIN IS BASED ON INFORMATION SUPPLIED BY OTHERS. BIG R BRIDGE IS CERTIFYING INTERNAL STABILITY OF THE STRUCTURE ONLY. EXTERNAL AND GLOBAL STABILITY REQUIREMENTS ARE THE RESPONSIBILITY OF OTHERS

REFERENCE DRAWINGS
NOT FOR CONSTRUCTION

VW15-00388
DESIGNED BY CDA
DRAWN BY ARO
CHECKED BY CDA
SHEET NO. 13 OF 16

K:\2015\VW\2015-00388 St. Johnsbury, VT\2015-0038B BASE REVISED 4-8-16.dwg

4/8/2016 2:05 PM

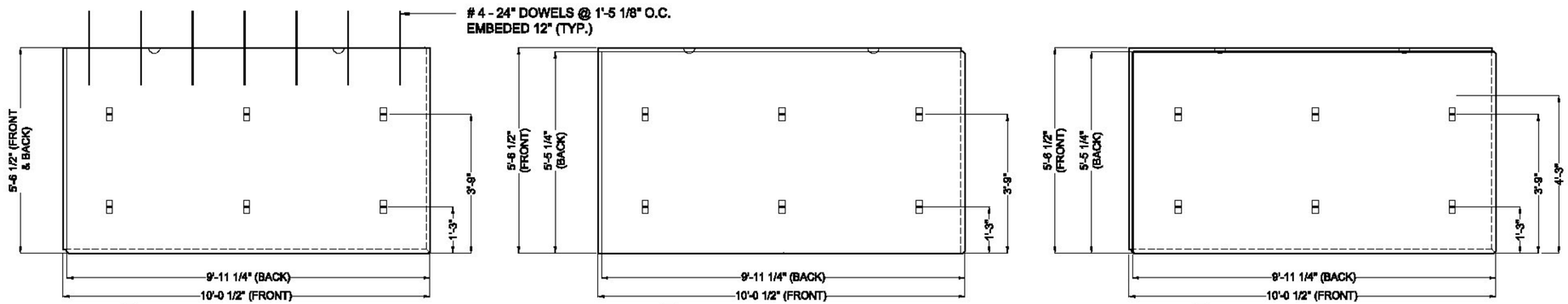

TH 14 TYPE 'TH' - 5'-6" PANEL (BACK FACE ELEVATION)

PH 14 TYPE 'PH' - 5'-6" PANEL (BACK FACE ELEVATION)

H 14 TYPE 'H' - 5'-6" PANEL (BACK FACE ELEVATION)

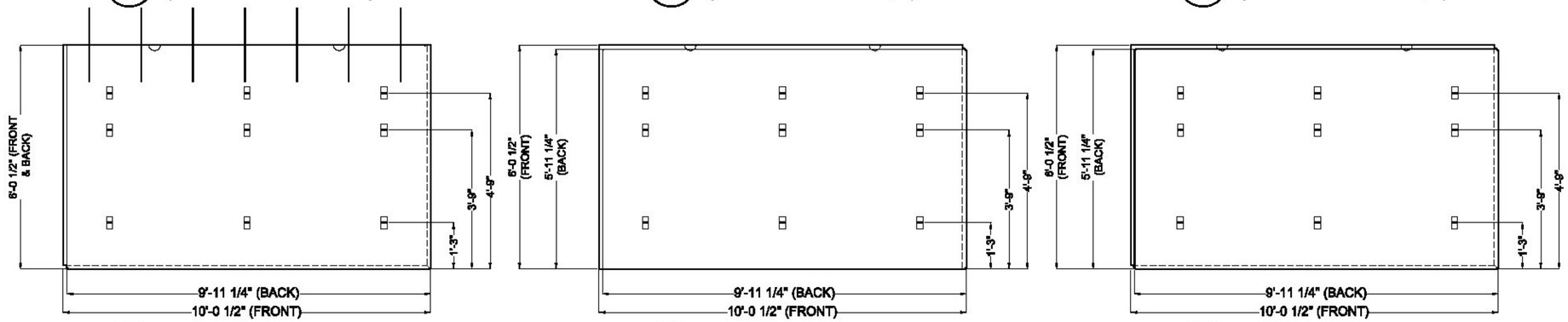

TJ 14 TYPE 'TJ' - 6'-0" PANEL (BACK FACE ELEVATION)

PJ 14 TYPE 'PJ' - 6'-0" PANEL (BACK FACE ELEVATION)

J 14 TYPE 'J' - 6'-0" PANEL (BACK FACE ELEVATION)

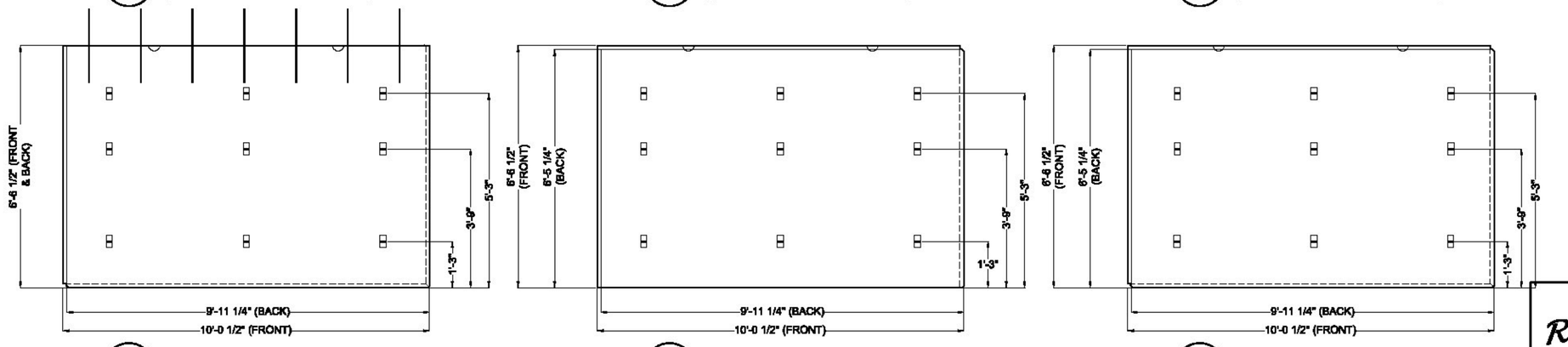

TK 14 TYPE 'TK' - 6'-6" PANEL (BACK FACE ELEVATION)

PK 14 TYPE 'PK' - 6'-6" PANEL (BACK FACE ELEVATION)

K 14 TYPE 'K' - 6'-6" PANEL (BACK FACE ELEVATION)

REV	DESCRIPTION	BY	DATE

PROPRIETARY AND CONFIDENTIAL
THIS DRAWING IS SOLE PROPERTY OF BIG R MANUFACTURING, LLC AND CONTAINS PROPRIETARY INFORMATION FOR USE WITH THIS PROJECT ONLY. ANY REPRODUCTION IN PART OR AS A WHOLE WITHOUT WRITTEN PERMISSION IS STRICTLY PROHIBITED.

BIG R BRIDGE
VISTAWALL SYSTEMS
P.O. Box 1290 • Greeley, Colorado 80632-1290
(970) 356-9600 • Fax:(970) 356-9621 • www.bigrbridge.com

PROPOSED IMPROVEMENT BRIDGE PROJECT
TOWN OF ST. JOHNSBURY COUNTY OF CALEDONIA
VT ROUTE 2B BRIDGE NO. 6

STANDARD COMPONENT DETAILS
SHEET 6 OF 8

SCP MSE RETAINING WALL
GRID-STRIP SOIL REINFORCING

THE DESIGN CONTAINED HEREIN IS BASED ON INFORMATION SUPPLIED BY OTHERS. BIG R BRIDGE IS CERTIFYING INTERNAL STABILITY OF THE STRUCTURE ONLY. EXTERNAL AND GLOBAL STABILITY REQUIREMENTS ARE THE RESPONSIBILITY OF OTHERS

REFERENCE DRAWINGS NOT FOR CONSTRUCTION

VW15-00388
DESIGNED BY CDA
DRAWN BY ARO
CHECKED BY CDA
SHEET NO. 14 OF 16

K:\2015\VW\2015-00388 St. Johnsbury, VT\2015-00388 BASE REVISED 4-8-16.dwg

4/8/2016 2:05 PM

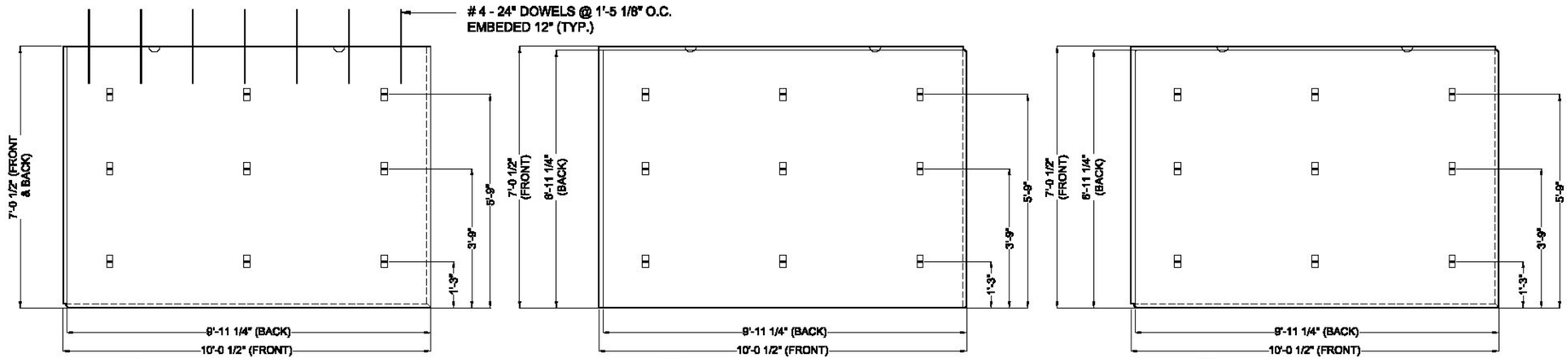

TL / 15 TYPE 'TL' - 7'-0" PANEL (BACK FACE ELEVATION)

PL / 15 TYPE 'PL' - 7'-0" PANEL (BACK FACE ELEVATION)

L / 15 TYPE 'L' - 7'-0" PANEL (BACK FACE ELEVATION)

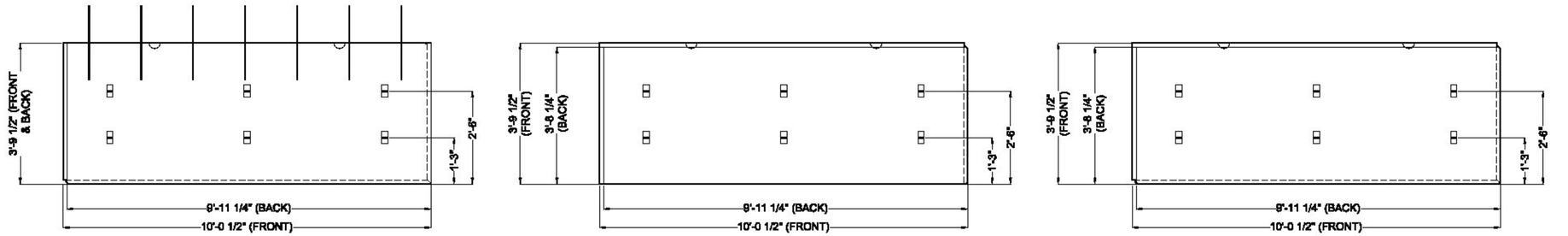

TY / 15 TYPE 'TY' - 3'-9" PANEL (BACK FACE ELEVATION)

PY / 15 TYPE 'PY' - 3'-9" PANEL (BACK FACE ELEVATION)

Y / 15 TYPE 'Y' - 3'-9" PANEL (BACK FACE ELEVATION)

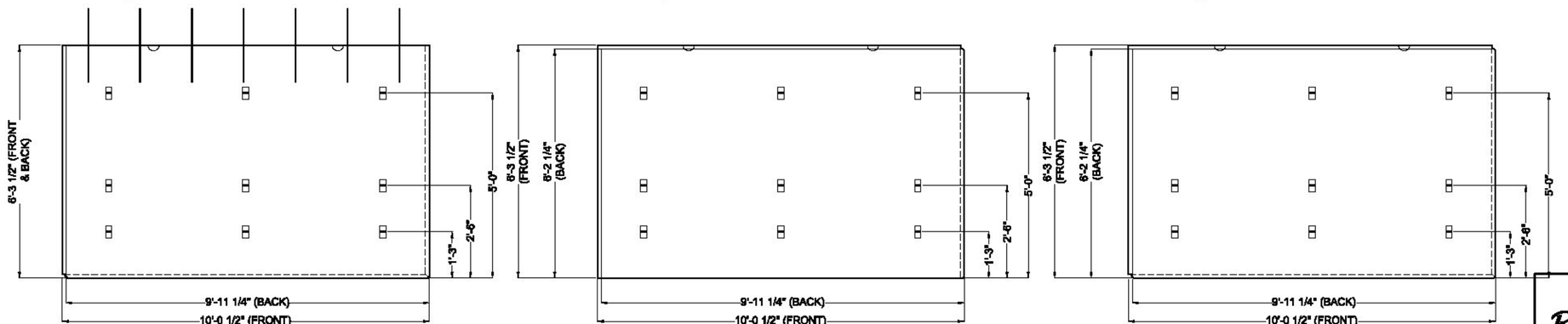

TZ / 15 TYPE 'TZ' - 6'-3" PANEL (BACK FACE ELEVATION)

PZ / 15 TYPE 'PZ' - 6'-3" PANEL (BACK FACE ELEVATION)

Z / 15 TYPE 'Z' - 6'-3" PANEL (BACK FACE ELEVATION)

REV	DESCRIPTION	BY	DATE

PROPRIETARY AND CONFIDENTIAL
THIS DRAWING IS SOLE PROPERTY OF BIG R MANUFACTURING, LLC AND CONTAINS PROPRIETARY INFORMATION FOR USE WITH THIS PROJECT ONLY. ANY REPRODUCTION IN PART OR AS A WHOLE WITHOUT WRITTEN PERMISSION IS STRICTLY PROHIBITED.

BIG R BRIDGE
VISTAWALL SYSTEMS
P.O. Box 1290 • Greeley, Colorado 80632-1290
(970) 356-9600 • Fax:(970) 356-9621 • www.bigrbridge.com

PROPOSED IMPROVEMENT BRIDGE PROJECT
TOWN OF ST. JOHNSBURY COUNTY OF CALEDONIA
VT ROUTE 2B BRIDGE NO. 6

STANDARD COMPONENT DETAILS
SHEET 7 OF 8

SCP MSE RETAINING WALL
GRID-STRIP SOIL REINFORCING

THE DESIGN CONTAINED HEREIN IS BASED ON INFORMATION SUPPLIED BY OTHERS. BIG R BRIDGE IS CERTIFYING INTERNAL STABILITY OF THE STRUCTURE ONLY. EXTERNAL AND GLOBAL STABILITY REQUIREMENTS ARE THE RESPONSIBILITY OF OTHERS

REFERENCE DRAWINGS
NOT FOR CONSTRUCTION

VW15-00388
DESIGNED BY CDA
DRAWN BY ARO
CHECKED BY CDA
SHEET NO. 15 OF 16

K:\2015\VW\2015-00388 St. Johnsbury, VT\2015-00388 BASE REVISED 4-8-16.dwg

4/8/2016 2:06 PM

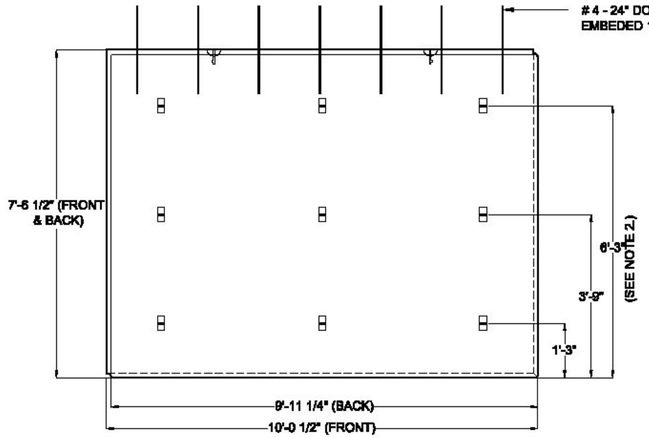

TM 16 TYPE 'TM' - 7'-6" PANEL (BACK FACE ELEVATION)

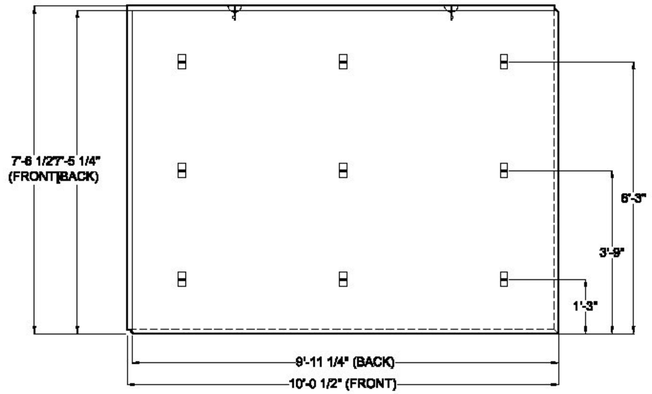

PM 16 TYPE 'PM' - 7'-6" PANEL (BACK FACE ELEVATION)

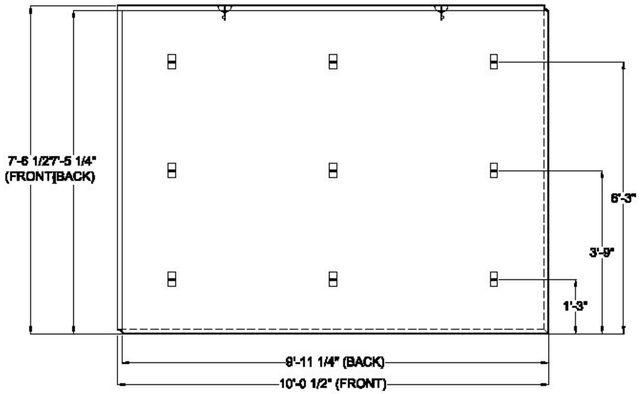

M 16 TYPE 'M' - 7'-6" PANEL (BACK FACE ELEVATION)

NOTES:

1. 'PM' PANELS ARE TO BE CAST AS STANDARD 'M' PANELS.
2. 'TM' PANELS ARE TO BE CAST AS STANDARD 'M' PANELS WITH TOP GRID-STRIP SET AT 6'-0".
3. THE CENTER ANCHOR SET IS SHOWN FOR THE UPPERMOST GRID-STRIP ROW MAY BE OMITTED FOR TYPE "M" & "PM" PANELS AS ONLY TYPE "TM" PANELS REQUIRE INSTALLATION OF THREE MATS PER RETAINING WALL LAYOUT DRAWINGS.

REV	DESCRIPTION	BY	DATE

PROPRIETARY AND CONFIDENTIAL
THIS DRAWING IS SOLE PROPERTY OF BIG R MANUFACTURING, LLC AND CONTAINS PROPRIETARY INFORMATION FOR USE WITH THIS PROJECT ONLY. ANY REPRODUCTION IN PART OR AS A WHOLE WITHOUT WRITTEN PERMISSION IS STRICTLY PROHIBITED.

BIG R BRIDGE
VISTAWALL SYSTEMS
P.O. Box 1290 • Greeley, Colorado 80632-1290
(970) 356-9600 • Fax:(970) 356-9621 • www.bigrbridge.com

PROPOSED IMPROVEMENT BRIDGE PROJECT
TOWN OF ST. JOHNSBURY COUNTY OF CALEDONIA
VT ROUTE 2B BRIDGE NO. 6

STANDARD COMPONENT DETAILS
SHEET 8 OF 8

SCP MSE RETAINING WALL
GRID-STRIP SOIL REINFORCING

THE DESIGN CONTAINED HEREIN IS BASED ON INFORMATION SUPPLIED BY OTHERS. BIG R BRIDGE IS CERTIFYING INTERNAL STABILITY OF THE STRUCTURE ONLY. EXTERNAL AND GLOBAL STABILITY REQUIREMENTS ARE THE RESPONSIBILITY OF OTHERS

REFERENCE DRAWINGS
NOT FOR CONSTRUCTION

VW15-00388
DESIGNED BY CDA
DRAWN BY ARO
CHECKED BY CDA
SHEET NO. 16 OF 16

K:\2015\VW\2015-00388 St. Johnsbury, VT\2015-00388 BASE REVISED 4-8-16.dwg

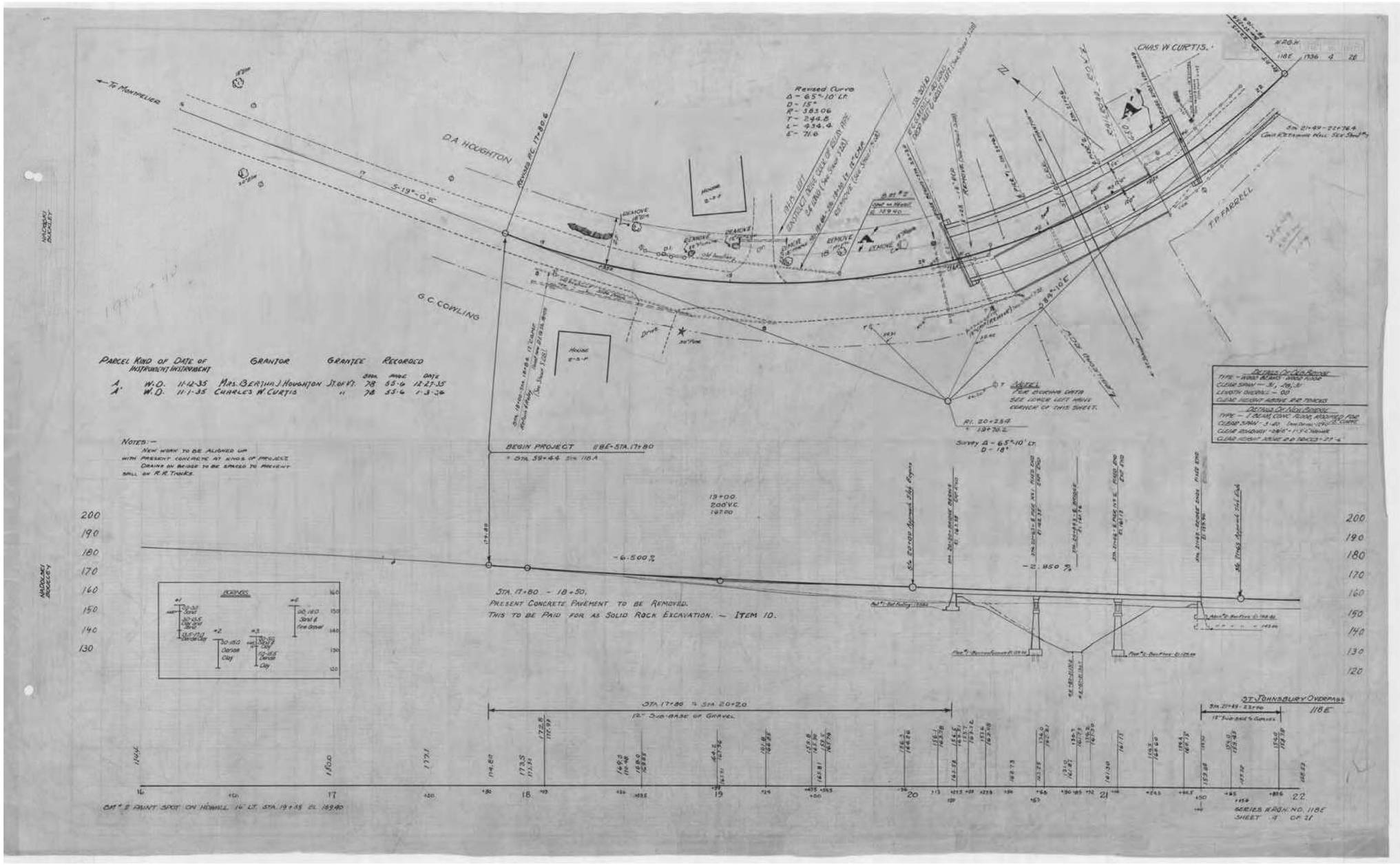

ST. JOHNSBURY
BF 7000(20)
REVISION #2 - 12/05/2016
"FOR REFERENCE ONLY"

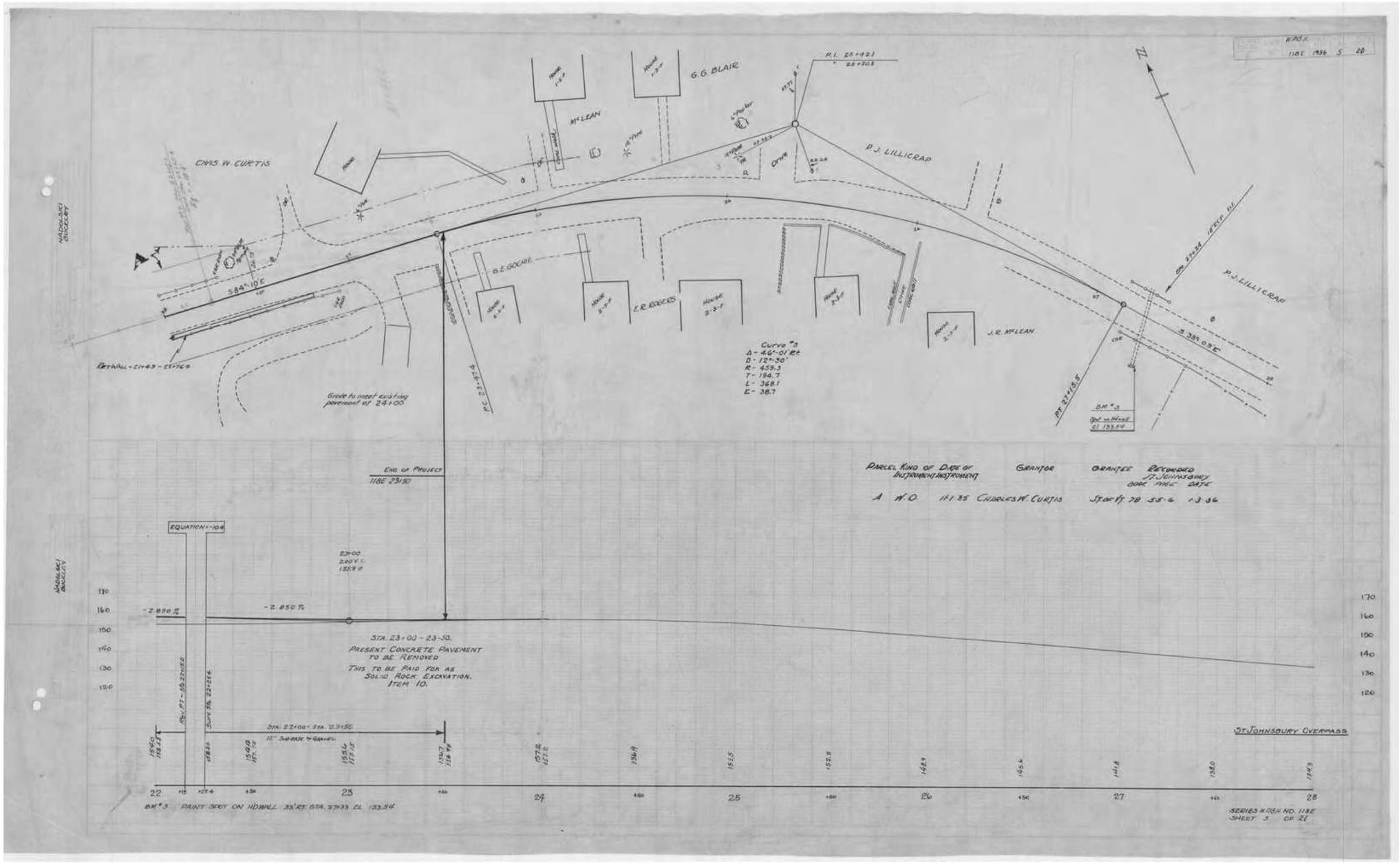

ST. JOHNSBURY
BF 7000(20)
REVISION #2 - 12/05/2016
"FOR REFERENCE ONLY"

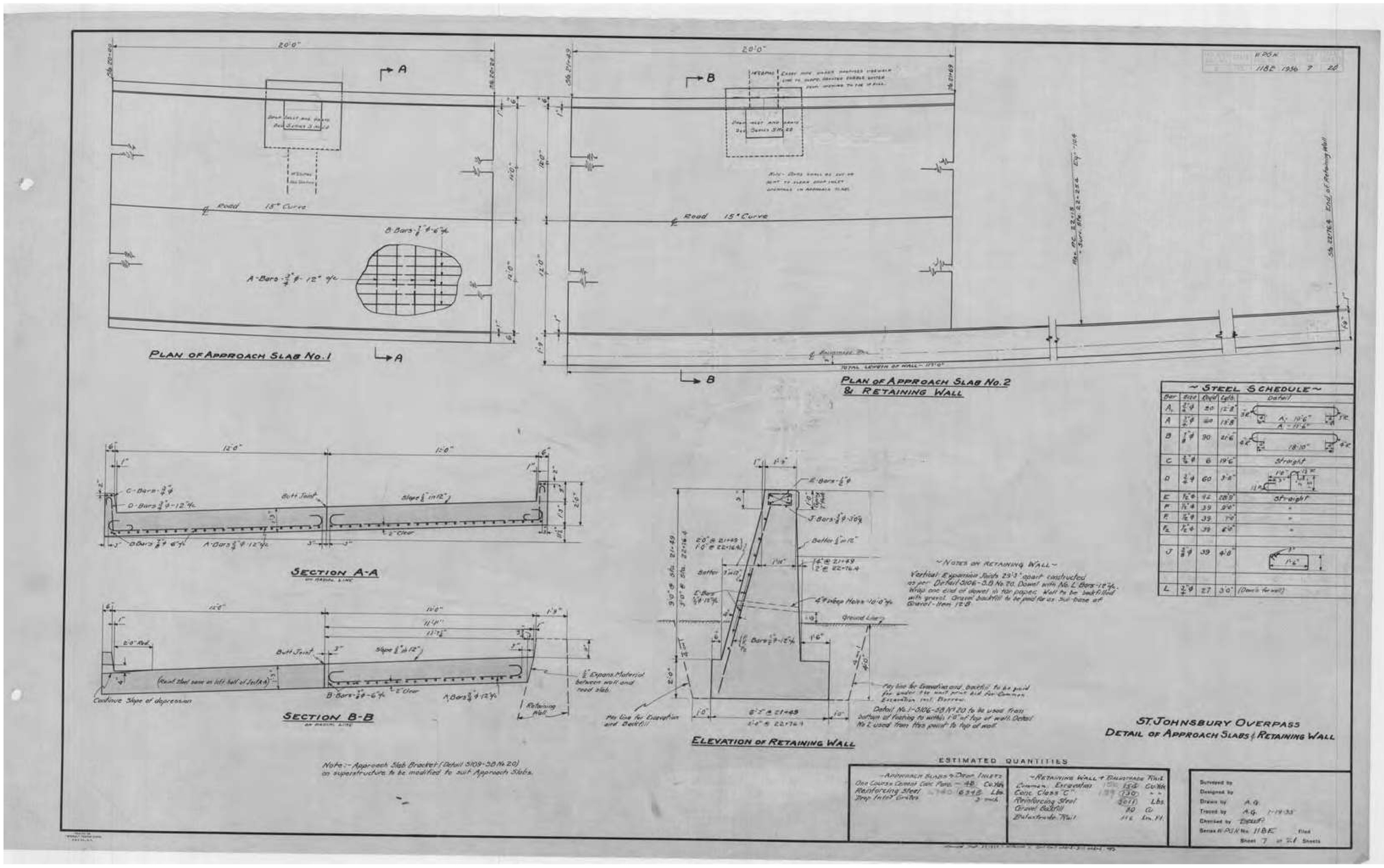

ST. JOHNSBURY
BF 7000(20)
REVISION #2 - 12/05/2016
"FOR REFERENCE ONLY"

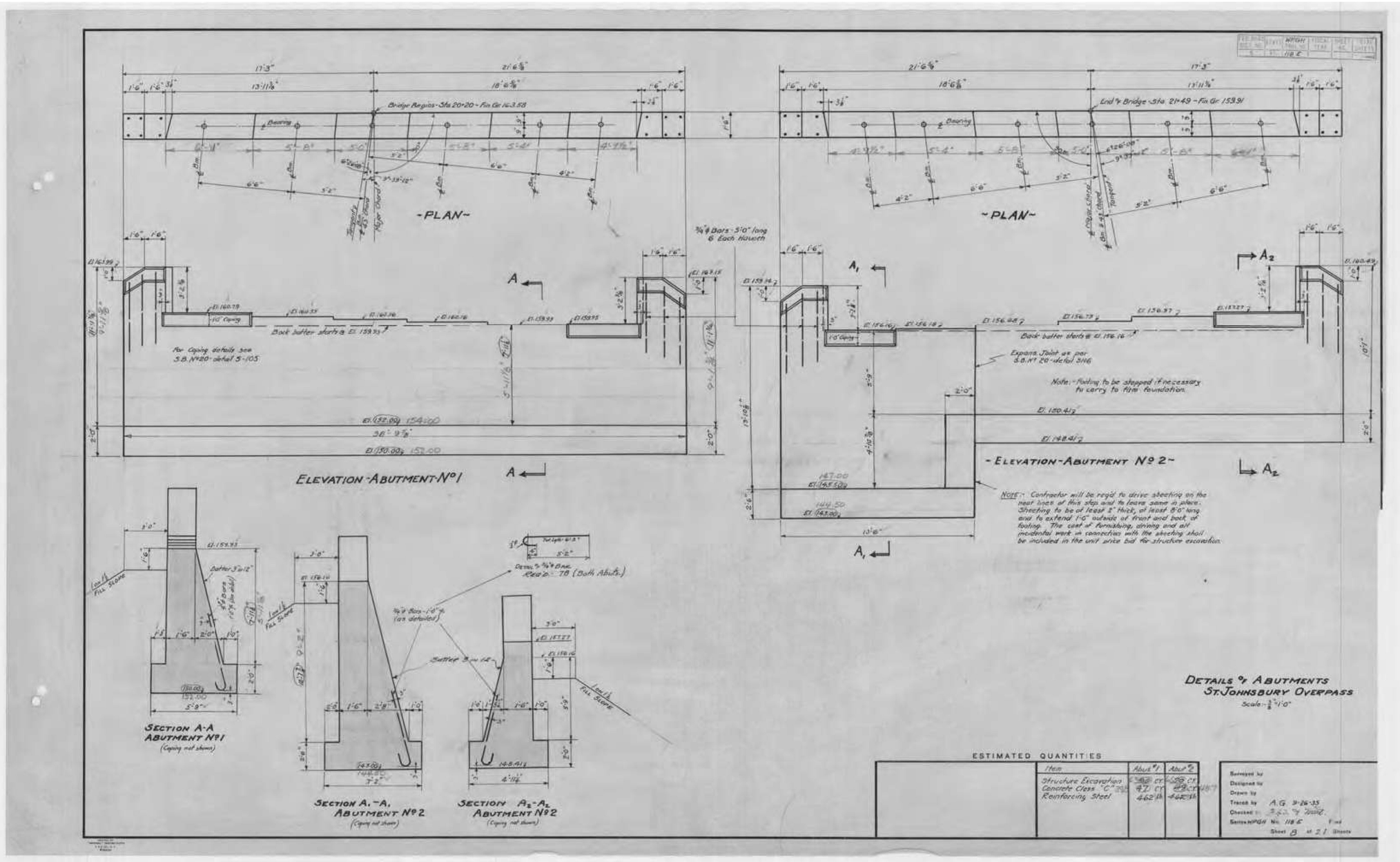

ST. JOHNSBURY
BF 7000(20)
REVISION #2 - 12/05/2016
"FOR REFERENCE ONLY"

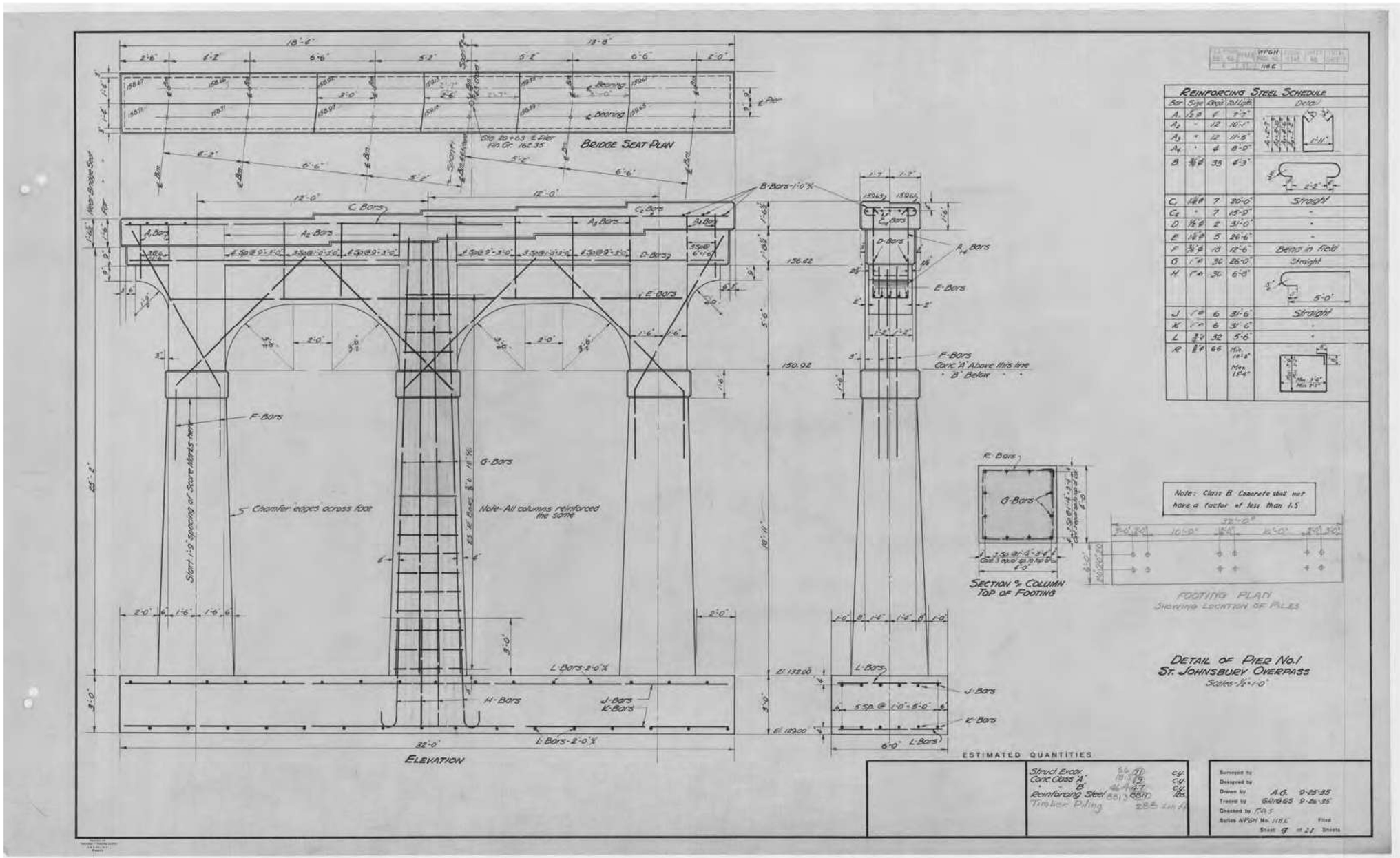

ST. JOHNSBURY
BF 7000(20)
REVISION #2 - 12/05/2016
"FOR REFERENCE ONLY"

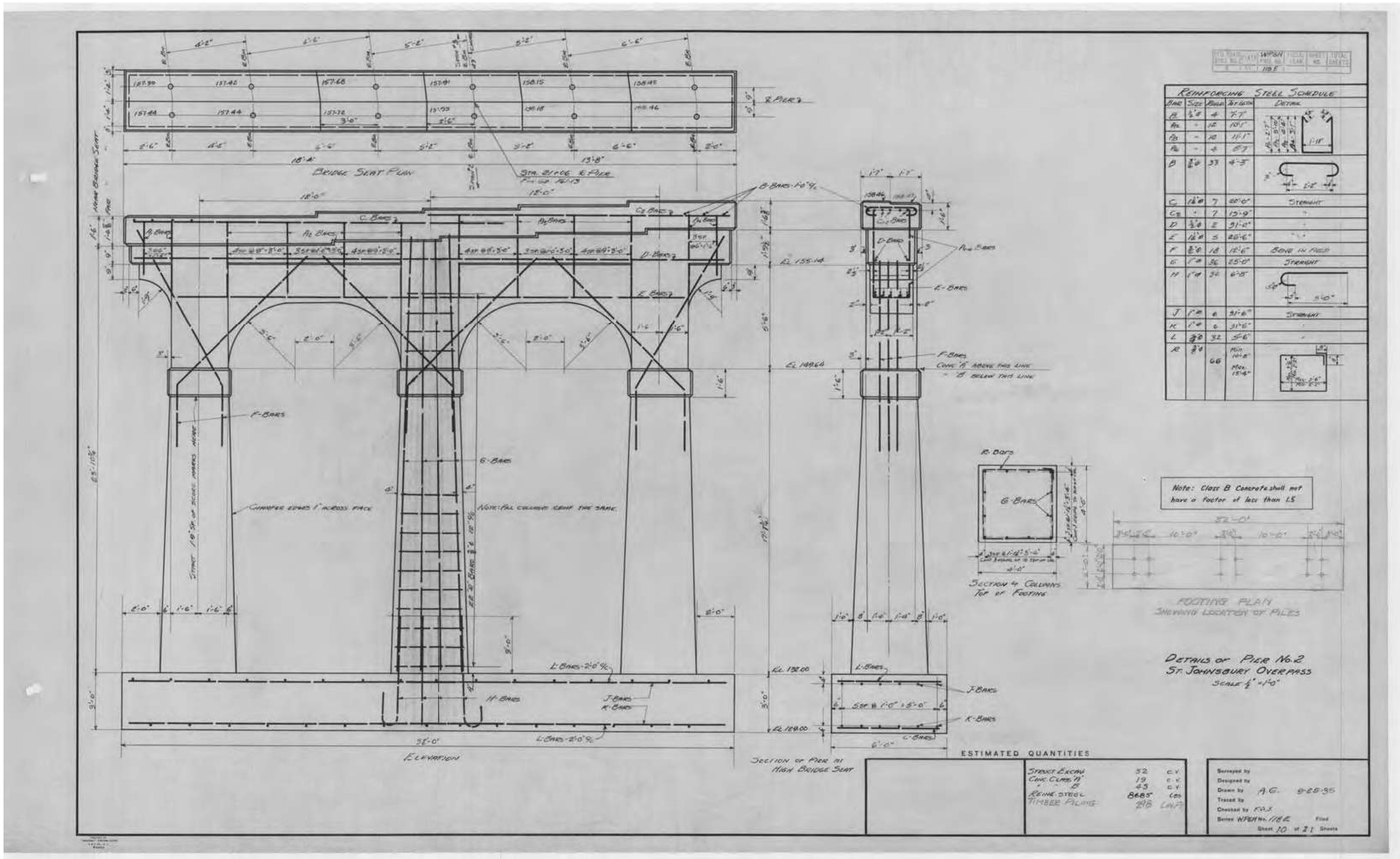

ST. JOHNSBURY
BF 7000(20)
REVISION #2 - 12/05/2016
"FOR REFERENCE ONLY"

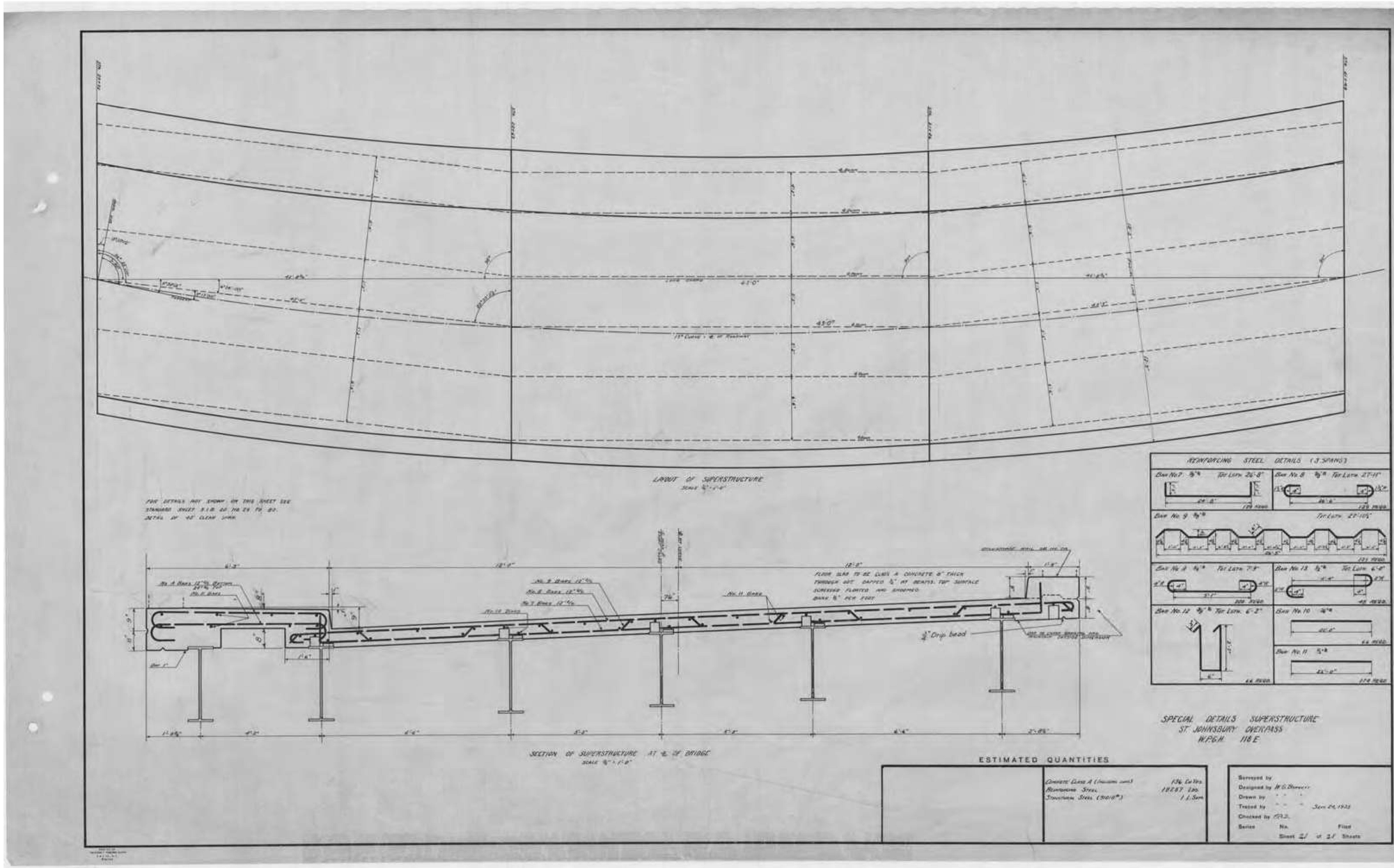

ST. JOHNSBURY
BF 7000(20)
REVISION #2 - 12/05/2016
"FOR REFERENCE ONLY"

CONCRETE GENERAL NOTES

1. ALL EXPOSED EDGES OF CONCRETE SHALL BE CHAMFERED 1" x 1"
2. REINFORCING STEEL SIZE AND SPACING SHOWN IN THE PLANS IS BASED ON 60 KSI STEEL, UNLESS NOTED OTHERWISE. WITH THE ENGINEER'S PERMISSION, BAR SIZE AND SPACING MAY BE MODIFIED ACCORDING TO THE LATEST AASHTO LRFD BRIDGE DESIGN SPECIFICATION AND STRUCTURES DESIGN MANUAL WHEN USING HIGHER STRENGTH STEEL.

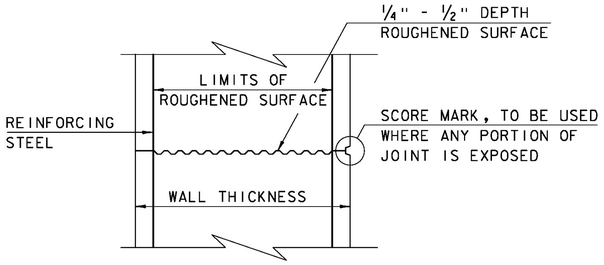

TYPICAL HORIZONTAL CONSTRUCTION JOINT
(NOT TO SCALE)

1. THE SURFACE OF THE CONCRETE CONSTRUCTION JOINTS SHALL BE CLEANED AND FREE OF LAITANCE.
2. IMMEDIATELY BEFORE NEW CONCRETE IS PLACED, ALL CONSTRUCTION JOINTS SHALL BE WETTED AND STANDING WATER REMOVED.

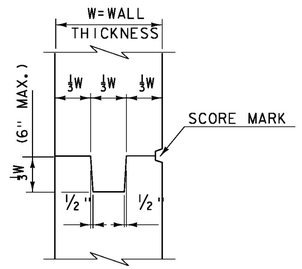

TYPICAL CONCRETE CONSTRUCTION JOINT
(NOT TO SCALE)

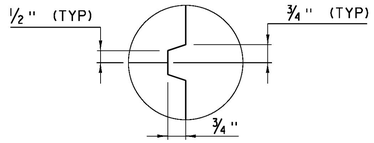

SCORE MARK DETAIL
(NOT TO SCALE)

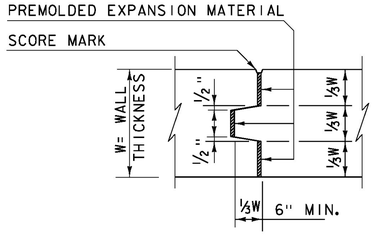

TYPICAL CONCRETE EXPANSION JOINT
(NOT TO SCALE)

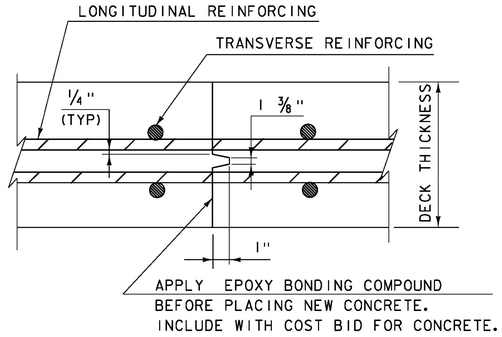

TRANSVERSE BRIDGE SLAB CONSTRUCTION JOINT DETAILS
(NOT TO SCALE)

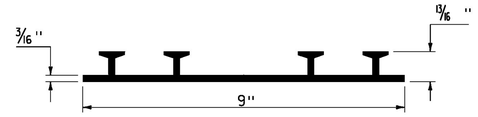

P.V.C. WATERSTOP FOR CONSTRUCTION JOINTS
(NOT TO SCALE)

PAYMENT FOR THE P.V.C. WATERSTOP SHALL BE INCIDENTAL TO THE UNIT BID PRICE FOR THE ADJACENT CONCRETE.

OTHER CONFIGURATIONS OF WATERSTOP MAY BE USED UPON APPROVAL OF THE ENGINEER.

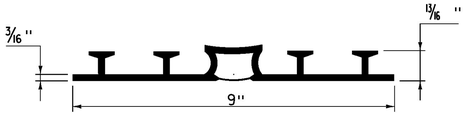

P.V.C. WATERSTOP FOR EXPANSION JOINTS
(NOT TO SCALE)

PAYMENT FOR THE P.V.C. WATERSTOP SHALL BE INCIDENTAL TO THE UNIT BID PRICE FOR THE ADJACENT CONCRETE.

OTHER CONFIGURATIONS OF WATERSTOP MAY BE USED UPON APPROVAL OF THE ENGINEER.

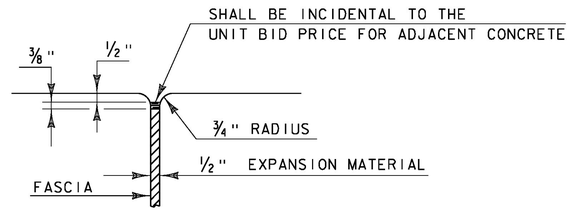

JOINT BETWEEN FASCIA AND WINGWALL
(NOT TO SCALE)

REVISIONS	
MAY 7, 2010	APPROVED FOR USE BY VAOT STRUCTURES SECTION
FEBRUARY 9, 2012	REBAR SUBSTITUTION ALLOWANCE ADDED TO CONCRETE GENERAL NOTES.

CONCRETE DETAILS AND NOTES

VERMONT AGENCY OF TRANSPORTATION
STRUCTURES SECTION

STRUCTURES DETAIL
SD-501.00

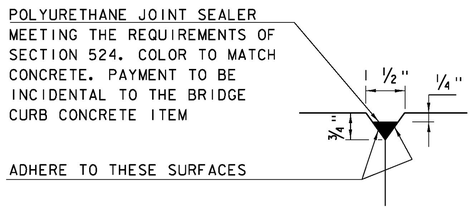

DETAIL "B"
(NOT TO SCALE)

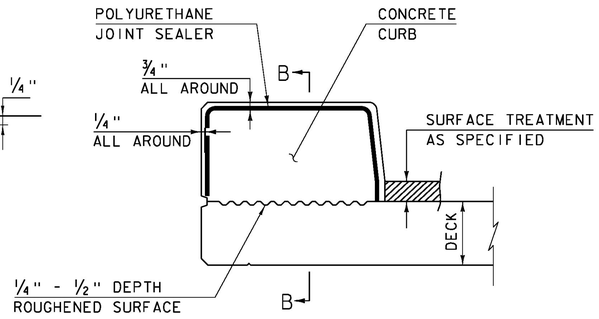

CONCRETE CURB JOINT SECTION
(NOT TO SCALE)

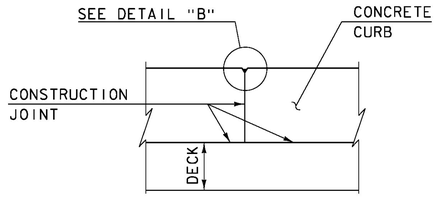

SECTION B - B
(NOT TO SCALE)

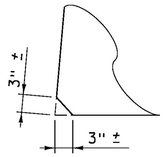

ACUTE ANGLE CLIP DETAIL
(NOT TO SCALE)

1. SEE TYPICAL HORIZONTAL CONSTRUCTION JOINT DETAIL FOR ADDITIONAL INFORMATION

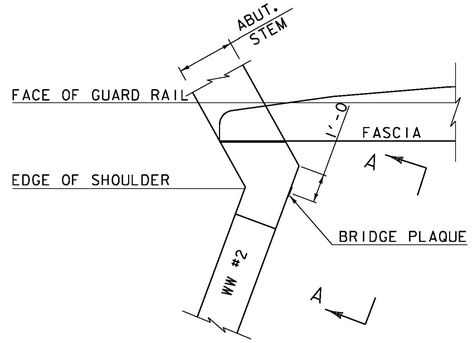

PLAN

CONCRETE CURB JOINT NOTES

1. CONCRETE CURBS MAY BE PLACED IN ONE CONTINUOUS OPERATION IF AN APPROVED SHRINKAGE REDUCING ADMIXTURE LISTED IN THE SPECIAL PROVISIONS IS USED WITH THE CONCRETE MIX DESIGN. PAYMENT FOR THE SHRINKAGE REDUCING ADMIXTURE WILL BE INCIDENTAL TO THE BRIDGE CURB CONCRETE ITEM.

2. IF THE CONTRACTOR CHOOSES NOT TO USE AN APPROVED SHRINKAGE REDUCING ADMIXTURE, THE CURBS SHALL BE CONSTRUCTED WITH CONSTRUCTION JOINTS SPACED AT A MAXIMUM OF 15'-0" CENTER TO CENTER AND 2'-0" MINIMUM FROM THE CENTER OF NEAREST BRIDGE RAILING POST.

3. ON MULTI-SPAN CONTINUOUS SUPERSTRUCTURES, REGARDLESS OF WHETHER APPROVED SHRINKAGE REDUCING ADMIXTURE IS USED, CURB JOINTS SHALL BE LOCATED OVER THE CENTERLINE OF PIERS AND 7'-0" EACH SIDE OF THE CENTERLINE OF EACH PIER.

4. WHEN CURB JOINTS ARE USED THE CURBS SHALL BE PLACED IN ALTERNATE SECTIONS WITH A MINIMUM OF 48 HOUR DELAY BETWEEN ADJACENT PLACEMENTS.

5. LONGITUDINAL REINFORCING SHALL BE CONTINUOUS THROUGH CURB CONSTRUCTION JOINTS. CURB STIRRUP BARS SHALL BE TURNED AS NECESSARY TO MAINTAIN COVER IN THE FLARED CURB ENDS.

6. THE JOINT SPACING AND DETAILS SHOWN SHALL APPLY TO SIDEWALKS WHEN SHOWN IN THE PLANS.

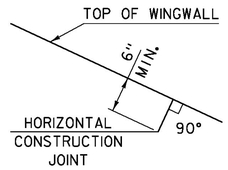

HORIZONTAL WINGWALL CONSTRUCTION JOINT
(NOT TO SCALE)

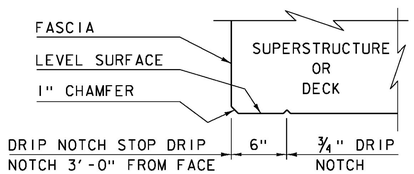

DRIP NOTCH DETAIL
(NOT TO SCALE)

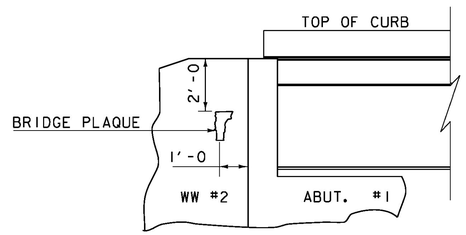

VIEW "A - A"

BRIDGE PLAQUE
(NOT TO SCALE)

THE BRIDGE PLAQUE WILL BE SUPPLIED BY THE AGENCY OF TRANSPORTATION AND SHALL BE INSTALLED BY THE CONTRACTOR AT ABUTMENT #1 ON THE RIGHT SIDE AS SHOWN OR AS DIRECTED BY THE ENGINEER.

PAYMENT FOR INSTALLATION OF THE BRIDGE PLAQUE SHALL BE INCIDENTAL TO THE ADJACENT CONCRETE.

REVISIONS	
MAY 7, 2010	APPROVED FOR USE BY VAOT STRUCTURES SECTION
JUNE 4, 2010	MODIFIED AND ADDED TWO DETAILS
OCTOBER 10, 2012	MODIFIED HORZ. JOINT WINGWALL ADD 6" MIN. DIMENSION

CONCRETE DETAILS AND NOTES

VERMONT AGENCY OF TRANSPORTATION
STRUCTURES - SECTION

STRUCTURES DETAIL
SD-502.00

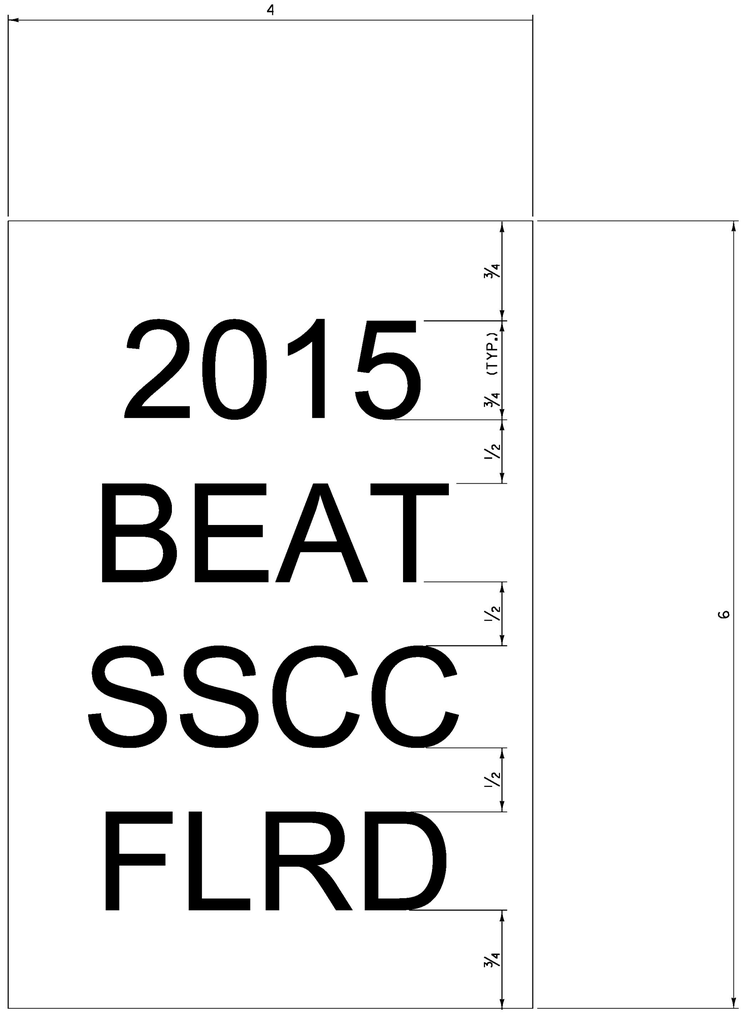

GENERAL NOTES:

1. LINE ONE SHALL INDICATE THE INSTALLATION YEAR (YYYY).
2. LINE TWO SHALL INDICATE THE MODEL AS IDENTIFIED ON THE APPROVED PRODUCTS LIST. FOR GENERIC INSTALLATIONS THE STANDARD DRAWING DESIGNATION OR NAME AS IDENTIFIED IN THE FHWA ELIGIBILITY LETTER SHALL BE USED.
3. LINE THREE SHALL SHALL INDICATE ADDITIONIAL MODEL INFORMATION IF NECESSARY.
4. LINE FOUR SHALL INDICATE FLARED (FLRD) OR TANGENT (TANG).
5. LEGEND SHALL BE ONE ARIEL FONT.
6. LEGEND SHALL BE BLACK ON A WHITE BACKGROUND, LENGEND AND BACKGROUND SHALL NOT BE REFLECTIVE.
7. SUITABLE MATERIAL SHALL BE USED SO AS TO NOT DETERIORATE DURING EXPOSURE TO WEATHER.
8. LABELS SHALL BE APPLIED IN SUCH A WAY THAT THEY REMAIN INTACT DURING THE LIFE OF THE TERMINAL.
9. FOR W-BEAM GUARDRAIL, LABEL SHALL BE PLACED ON THE TOP OF POST ONE FACING AWAY FROM TRAFFIC.
10. FOR BOX BEAM GUARDRAIL, LABEL SHALL BE PLACED ON THE BOX BEAM ADJACENT TO POST ONE FACING AWAY FROM TRAFFIC.
11. PAYMENT SHALL BE INCIDENTAL TO OTHER TRAFFIC BARRIER ITEMS.
12. ALL DIMENSIONS IN INCHES.

REV.	DATE	DESCRIPTION
0	NOV. 3, 2015	ORIGINAL APPROVAL

OTHER DETAILS REQUIRED: NONE

DETAILS APPROVED FOR USE BY HIGHWAY SAFETY & DESIGN

GUARDRAIL TERMINAL LABEL DETAIL

VTrans Working to Get You There — VERMONT AGENCY OF TRANSPORTATION

HIGHWAY SAFETY & DESIGN DETAIL

HSD-621.06

PO Box 508
Barton, VT 05822
Phone: (802)525-9506
Fax: (802)525-4616
www.jpsicard.com

Submittal Data Sheet

Submittal #: 6

Submission #: 2

Date: 3/6/17

Project Name: St. Johnsbury BF 7000 (20)

Owner: State of Vermont Agency of Transportation

Division:

Contractor: J.P. Sicard Inc.

Item Number: 540.10

Supplier: J.P. Carrara & Sons Inc.

Description of Item: Spread Footing & Rail Support Slab

Subsitution: NO

Engineers Review Comments:

Submitted By:	Pat Uhsmann
Title:	Project Manager
Company:	JP Sicard Inc

Vermont Agency of Transportation

RECEIVED

Submittal_6-1_Spread_Footing_-_Rail_Support_Slab-Approved 3-16-17_Stamped.pdf

CK'D BY CLD OK'D BY WBP

March 6, 2017

RESUBMIT NO Approved

BY WPELLETIER DATE 03/16/2017

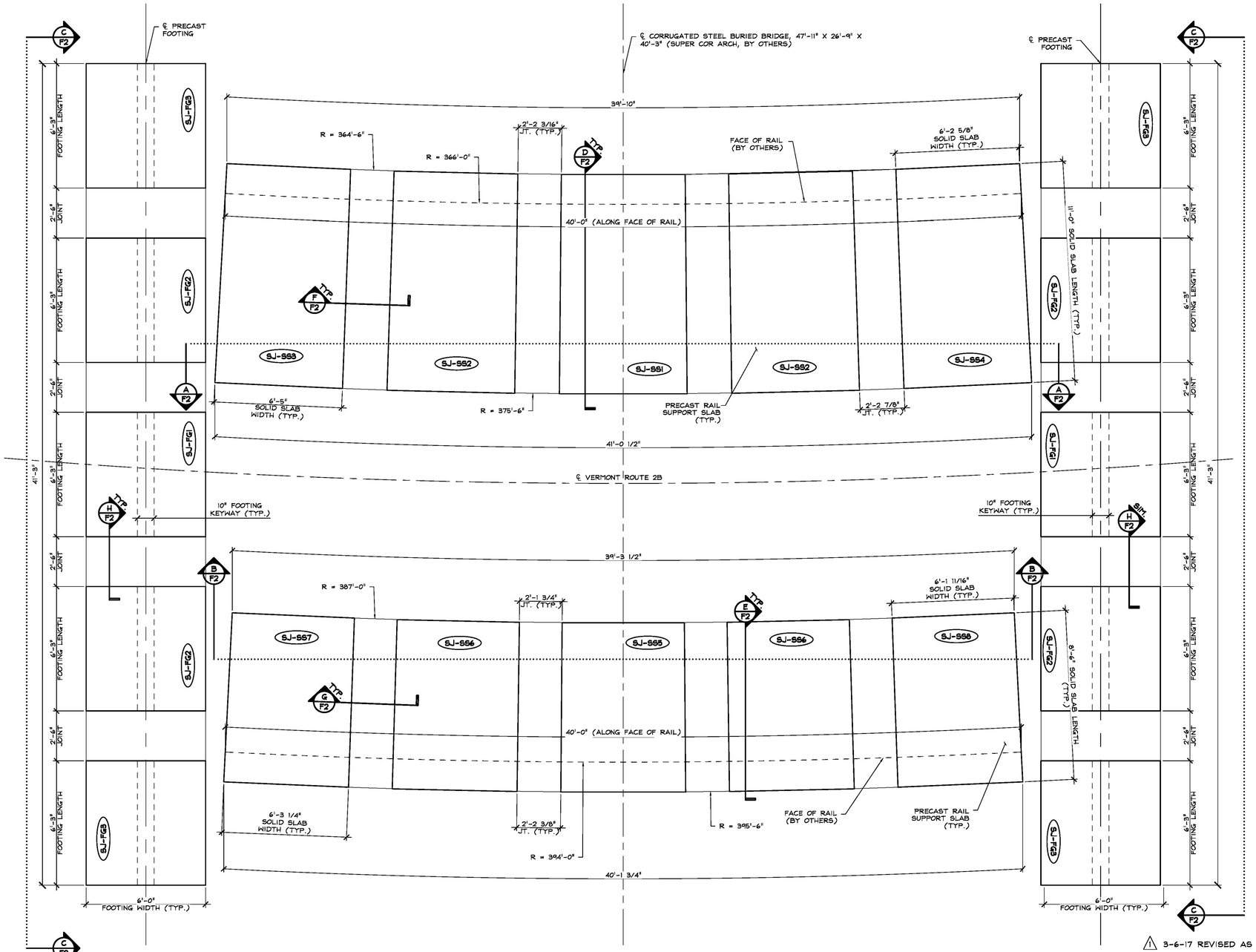

PRECAST GENERAL NOTES

1. MIN. CONCRETE STRENGTH AT 28 DAYS SHALL BE 5,000 PSI.
2. MIN. CONCRETE STRENGTH FOR HANDLING SHALL BE 3,000 PSI (UNLESS NOTED OTHERWISE).
3. REINFORCING STEEL SHALL BE GR-60, ASTM A-615 (AASHTO M31), AND SHALL BE EPOXY COATED, (UNLESS NOTED OTHERWISE).
4. REINFORCING STEEL FOR THE PROJECTING BARS IN THE SOLID SLABS FOR THE C.I.P. CONCRETE RAIL (BY OTHERS) SHALL BE GR-520, ASTM 955M STAINLESS STEEL (2304 DUPLEX UNS-S32304) (AS NOTED ON THE SHOP DRAWINGS).
5. THE TOP OF PRECAST UNITS SHALL RECEIVE A SMOOTH FLOAT FINISH (UNLESS NOTED OTHERWISE ON SHOP DRAWINGS).
6. PRECAST UNITS SHALL BE HANDLED AND ERECTED USING THE LIFTING INSERTS ONLY. THE MINIMUM SLING ANGLE FROM THE HORIZONTAL SHALL BE 60°. PRECAST UNITS SHALL BE STORED & TRANSPORTED WITH TIMBER SUPPORTS@BEARING POINTS, UNLESS APPROVED BY J.P. CARRARA & SONS, INC. 1
7. MATERIAL SPECIFICATION AND MIX DESIGN SHALL CONFORM TO VERMONT SPEC. P540.02 AND P540.05 RESPECTIVELY.
   DESIGN MIX: J.P.C. BRIDGE MIX #4465MSCC
   AIR 5% - 9%
   SPREAD 20" - 26"
   APPROVAL DATE FEBRUARY 22, 2017 1
8. QUALITY CONTROL PROCEDURES ARE IN ACCORDANCE WITH PCI REQUIREMENTS. J.P. CARRARA & SONS, INC. IS A PCI CERTIFIED PLANT.
9. CURING METHOD: AS SOON AS THE TOP OF PRECAST UNIT IS FINISHED, A COVER OF POLY WILL BE PLACED OVER THE PRECAST UNIT. NATURAL CURE WITH NO EXTERNAL HEAT APPLIED. AMBIENT ENCLOSURE TEMPERATURE SHALL BE MONITORED. IF APPLICABLE, UNITS SHALL NOT BE EXPOSED TO A TEMPERATURE DIFFERENTIAL GREATER THAN 40°F FOR LONGER THAN 30 MINUTES WHICH WILL BE NECESSARY TO REMOVE THE SURFACE RETARDER AND ACHIEVE THE DESIRED KEYWAY FINISH. UNITS SHALL NOT BE EXPOSED TO A TEMPERATURE LESS THAN 36°F UNTIL DESIGN STRENGTH IS ACHIEVED.
10. SHEAR KEY SURFACES SHALL BE ROUGHENED TO PROVIDE AN 1/8" AMPLITUDE EXPOSED AGGREGATE PROFILE. FABRICATOR MAY UTILIZE A SURFACE RETARDER WITH WATER BLAST, SAND BLAST, OR A COMBINATION OF BOTH TO ACHIEVE THE DESIRED SHEAR KEY SURFACE FINISH.

Vermont Agency of Transportation
RECEIVED
CK'D BY CLD OK'D BY MBP
March 6, 2017
RESUBMIT NO Approved
BY WPELLETIER DATE 03/16/2017

SHOP DRAWING REVIEW

[X] REVIEWED AS REQUIRED BY THE CONSTRUCTION CONTRACT DOCUMENTS AND APPROVED, BUT ONLY FOR CONFORMANCE TO THE DESIGN CONCEPT OF THE WORK, AND SUBJECT TO FURTHER LIMITATIONS AND REQUIREMENTS CONTAINED IN THE CONSTRUCTION CONTRACT DOCUMENTS.

[ ] REJECTED [ ] REVISE AND RESUBMIT [ ] APPROVED AS NOTED

CORRECTIONS OR COMMENTS MADE ON THE SHOP DRAWINGS DURING THIS REVIEW DID NOT RELIEVE CONTRACTOR FROM COMPLIANCEWITH REQUIREMENTS OF THE DRAWINGS AND SPECIFICATIONS. THIS CHECK IS ONLY FOR REVIEW OF GENERAL CONFORMANCE WITH THE DESIGN CONCEPT OF THE PROJECT AND GENERAL COMPLIANCE WITH THE INFORMATION GIVEN IN THE CONTRACT DOCUMENTS. THE CONTRACTOR IS RESPONSIBLE FOR: CONFIRMING AND CORRELATING ALL QUANTITIES AND DIMENSIONS; SELECTING FABRICATION PROCESSES AND TECHNIQUES OF CONSTRUCTION; COORDINATING THEIR WORK WITH THAT OF ALL OTHER TRADES; AND PERFORMING THEIR WORK IN A SAFE AND SATISFACTORY MANNER.

CLD Consulting Engineers
540 Commercial Street
Manchester, NH 03101
603-668-8223

Job Number: 14-0116
Reviewed by: AEG
Date: 3/16/17

1 3-6-17 REVISED AS NOTED

1 / F1 PRECAST FOOTINGS & RAIL SUPPORT SLAB LAYOUT PLAN
3/8" = 1'-0"

APPROVAL STAMP:

J.P. CARRARA & SONS INC.
Precast & Prestress Manufacturer
2484 CASE STR., MIDDLEBURY, VERMONT 05753 Phone:(802)388-6361 Fax:(802)388-9010

J.P. SICARD, INC.
CONTRACTOR
BARTON, VERMONT

STATE OF VERMONT AGENCY OF TRANSPORTATION
COUNTY OF CALEDONIA

TOWN OF ST. JOHNSBURY
VT ROUTE 2B, URBAN MINOR ARTERIAL
BRIDGE NO.: 6 PROJECT NO.: BF 7000(20)

PRECAST FOOTINGS & RAIL SUPPORT SLAB LAYOUT PLAN

DATE: FEB. 6, 2017
SCALE: NOTED
CHKD: M.W. DFTM: A.S.
JOB NO: 23507-017
DWG. NO: F1

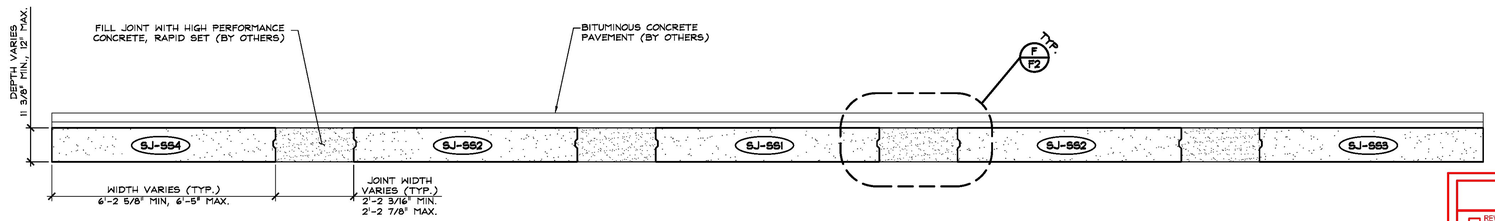

A F2 NORTH RAIL SUPPORT SLAB TRANSVERSE SECTION
1/2" = 1'-0"

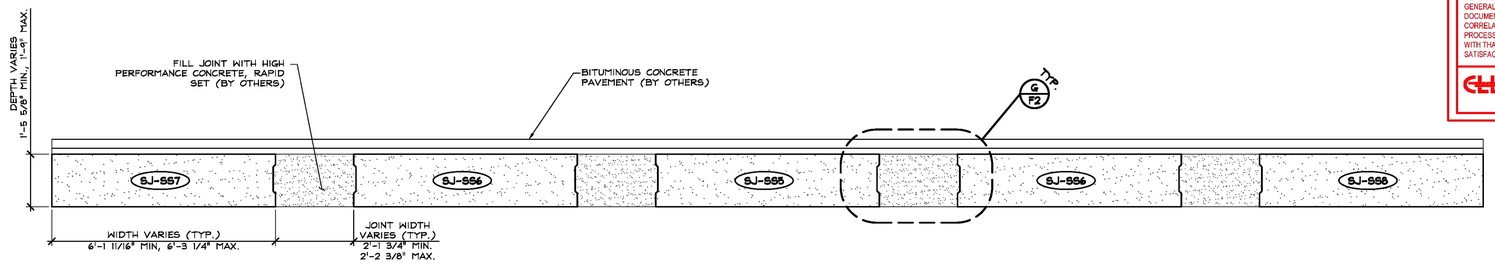

B F2 SOUTH RAIL SUPPORT SLAB TRANSVERSE SECTION
1/2" = 1'-0"

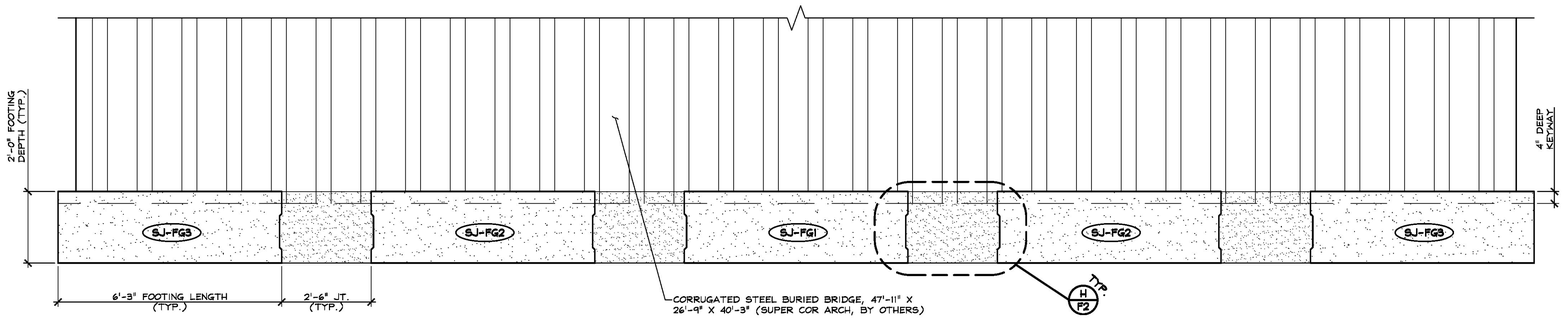

C F2 FOOTING ELEVATION
1/2" = 1'-0"

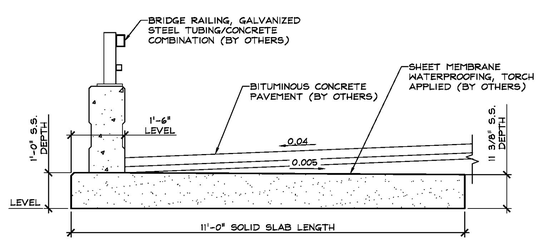

D F2 NORTH RAIL SUPPORT SLAB SECTION
1/2" = 1'-0"

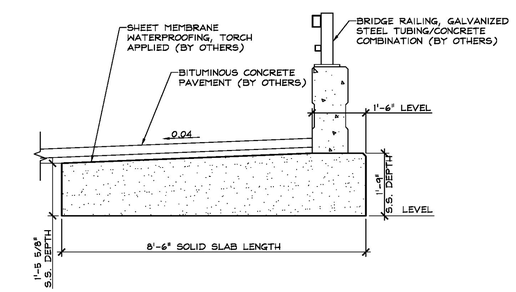

E F2 SOUTH RAIL SUPPORT SLAB SECTION
1/2" = 1'-0"

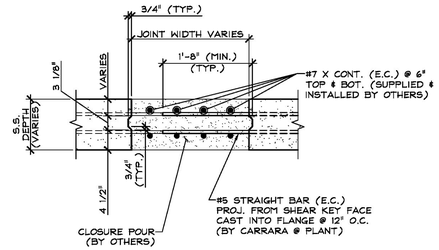

F F2 SHEAR KEY SECTION @ NORTH RAIL SUPPORT SLAB 3/4" = 1'-0"

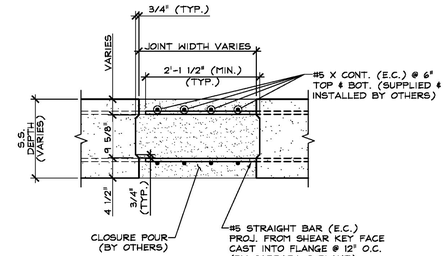

G F2 SHEAR KEY SECTION @ SOUTH RAIL SUPPORT SLAB 3/4" = 1'-0"

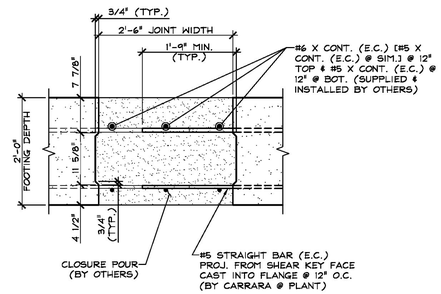

SIM. H F2 H F2 SHEAR KEY SECTION @ FOOTING 3/4" = 1'-0"

SHOP DRAWING REVIEW

[X] REVIEWED AS REQUIRED BY THE CONSTRUCTION CONTRACT DOCUMENTS AND APPROVED, BUT ONLY FOR CONFORMANCE TO THE DESIGN CONCEPT OF THE WORK, AND SUBJECT TO FURTHER LIMITATIONS AND REQUIREMENTS CONTAINED IN THE CONSTRUCTION CONTRACT DOCUMENTS.

[ ] REJECTED [ ] REVISE AND RESUBMIT [ ] APPROVED AS NOTED

CORRECTIONS OR COMMENTS MADE ON THE SHOP DRAWINGS DURING THIS REVIEW DID NOT RELIEVE CONTRACTOR FROM COMPLIANCEWITH REQUIREMENTS OF THE DRAWINGS AND SPECIFICATIONS. THIS CHECK IS ONLY FOR REVIEW OF GENERAL CONFORMANCE WITH THE DESIGN CONCEPT OF THE PROJECT AND GENERAL COMPLIANCE WITH THE INFORMATION GIVEN IN THE CONTRACT DOCUMENTS. THE CONTRACTOR IS RESPONSIBLE FOR: CONFIRMING AND CORRELATING ALL QUANTITIES AND DIMENSIONS; SELECTING FABRICATION PROCESSES AND TECHNIQUES OF CONSTRUCTION; COORDINATING THEIR WORK WITH THAT OF ALL OTHER TRADES; AND PERFORMING THEIR WORK IN A SAFE AND SATISFACTORY MANNER.

CLD Consulting Engineers
540 Commercial Street
Manchester, NH 03101
603-668-8223

Job Number: 14-0116
Reviewed by: AEG
Date: 3/16/17

Vermont Agency of Transportation
RECEIVED
CK'D BY CLD OK'D BY VBP
March 6, 2017
RESUBMIT NO Approved
BY WPELLETIER DATE 03/16/2017

APPROVAL STAMP:

J.P. CARRARA & SONS INC. Precast & Prestress Manufacturer 2454 CASE STR., MIDDLEBURY, VERMONT 05753 Phone:(802)388-6361 Fax:(802)388-9010	J.P. SICARD, INC. CONTRACTOR BARTON, VERMONT
STATE OF VERMONT AGENCY OF TRANSPORTATION COUNTY OF CALEDONIA	DATE: FEB. 6, 2017 SCALE: NOTED
TOWN OF ST. JOHNSBURY VT ROUTE 2B, URBAN MINOR ARTERIAL BRIDGE NO.: 6 PROJECT NO.: BF 7000(20)	CHKD: M.H. DFTM: A.S. JOB NO: 23507-017
PRECAST FOOTINGS & RAIL SUPPORT SLAB SECTIONS & DETAILS	DWG. NO: F2

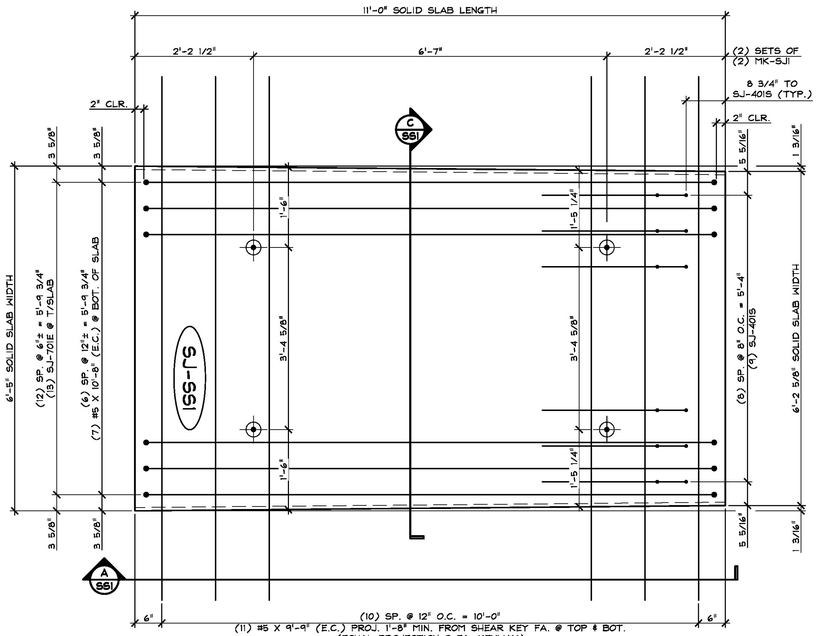

1 SSI PLAN VIEW IN FORM
3/4" = 1'-0"

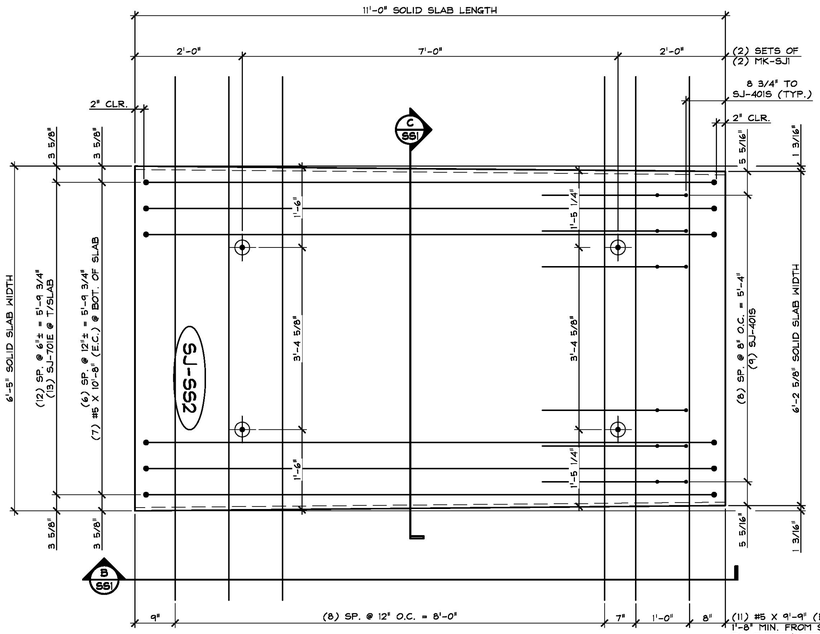

2 SSI PLAN VIEW IN FORM
3/4" = 1'-0"

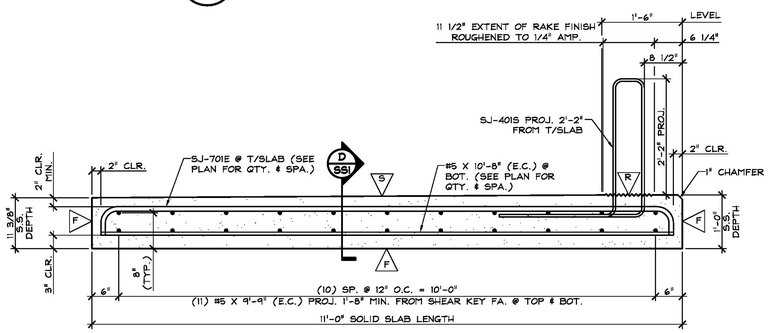

A SSI LONGITUDINAL SECTION
3/4" = 1'-0"

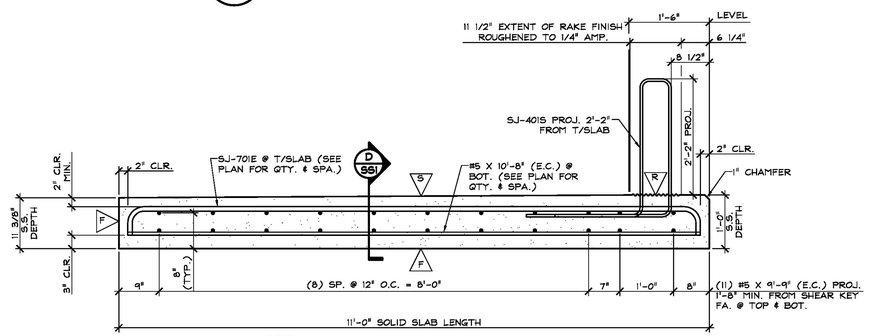

B SSI LONGITUDINAL SECTION
3/4" = 1'-0"

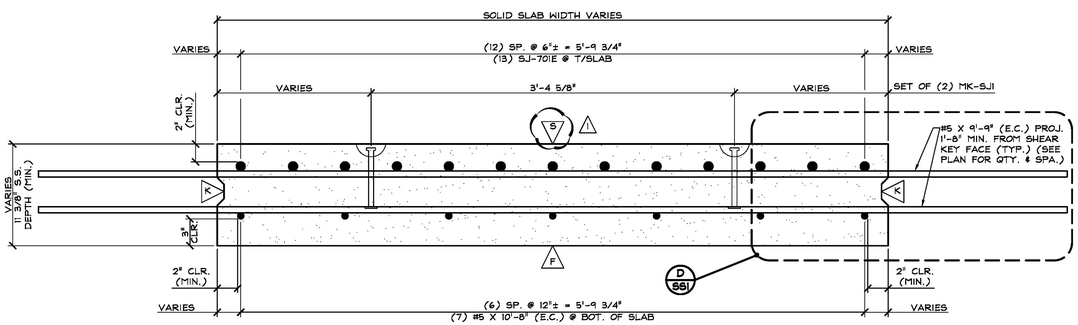

C SSI TRANSVERSE SECTION
1 1/2" = 1'-0"

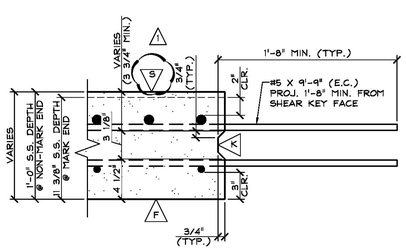

D SSI SHEAR KEY SECTION
1 1/2" = 1'-0"

△1 3-6-17 REVISED AS NOTED

△A DENOTES FORM FINISH
△S DENOTES SMOOTH FLOAT FINISH
△R DENOTES ROUGHENED FINISH (SEE GENERAL NOTE #10, SHEET 'F1')
△R DENOTES RAKE FINISH ROUGHENED TO 1/4" AMPLITUDE

SHOP NOTE:
28-DAY STRENGTH = 5,000 PSI
HANDLING STRENGTH = 3,000 PSI
DESIGN MIX #445MSCC

MARK:	SJ-SS1	QTY.: 1	WT.:	5.09 T	VOL.:	2.52 cy
MARK:	SJ-SS2	QTY.: 2	WT.:	5.09 T	VOL.:	2.52 cy

MATERIAL LIST / SOLID SLAB

ITEM	MARK	DESCRIPTION	QTY./SLAB SS1	QTY./SLAB SS2
1	SJ-401S	#4 BENT BAR (STAINLESS STEEL)	9	9
2				
3		#5 x 9'-9" (EPOXY COATED)	22	22
4		#5 X 10'-8" (EPOXY COATED)	7	7
5				
6	SJ-701E	#7 BENT BAR (EPOXY COATED)	13	13
7				
8	MK-SJI	DAYTON 2T X 6 3/4" SWIFT LIFT (GALV.) (DOMESTIC)	4	4
9				
10				

APPROVAL STAMP:

J.P. CARRARA & SONS INC.
Precast & Prestress Manufacturer
2494 CASE STR., MIDDLEBURY, VERMONT 05753 Phone:(802)388-6361 Fax:(802)388-9010

J.P. SICARD, INC.
CONTRACTOR
BARTON, VERMONT

STATE OF VERMONT AGENCY OF TRANSPORTATION
COUNTY OF CALEDONIA

TOWN OF ST. JOHNSBURY
VT ROUTE 2B, URBAN MINOR ARTERIAL
BRIDGE NO.: 6 PROJECT NO.: BF 7000(20)

PRECAST SOLID SLAB DETAILS

DATE: FEB. 6, 2017
SCALE: NOTED
CHKD: M.W. DFTM: A.S.
JOB NO: 23507-017
DWG. NO: SS1

Vermont Agency of Transportation
RECEIVED
CK'D BY CLD OK'D BY WSP
March 6, 2017
RESUBMIT NO Approved
BY WPELLETIER DATE 03/16/2017

SHOP DRAWING REVIEW

[X] REVIEWED AS REQUIRED BY THE CONSTRUCTION CONTRACT DOCUMENTS AND APPROVED, BUT ONLY FOR CONFORMANCE TO THE DESIGN CONCEPT OF THE WORK, AND SUBJECT TO FURTHER LIMITATIONS AND REQUIREMENTS CONTAINED IN THE CONSTRUCTION CONTRACT DOCUMENTS.

[ ] REJECTED [ ] REVISE AND RESUBMIT [ ] APPROVED AS NOTED

CORRECTIONS OR COMMENTS MADE ON THE SHOP DRAWINGS DURING THIS REVIEW DID NOT RELIEVE CONTRACTOR FROM COMPLIANCEWITH REQUIREMENTS OF THE DRAWINGS AND SPECIFICATIONS. THIS CHECK IS ONLY FOR REVIEW OF GENERAL CONFORMANCE WITH THE DESIGN CONCEPT OF THE PROJECT AND GENERAL COMPLIANCE WITH THE INFORMATION GIVEN IN THE CONTRACT DOCUMENTS. THE CONTRACTOR IS RESPONSIBLE FOR: CONFIRMING AND CORRELATING ALL QUANTITIES AND DIMENSIONS; SELECTING FABRICATION PROCESSES AND TECHNIQUES OF CONSTRUCTION; COORDINATING THEIR WORK WITH THAT OF ALL OTHER TRADES; AND PERFORMING THEIR WORK IN A SAFE AND SATISFACTORY MANNER.

CLD Consulting Engineers
540 Commercial Street
Manchester, NH 03101
603-668-8223

Job Number: 14-0116
Reviewed by: AEG
Date: 3/16/17

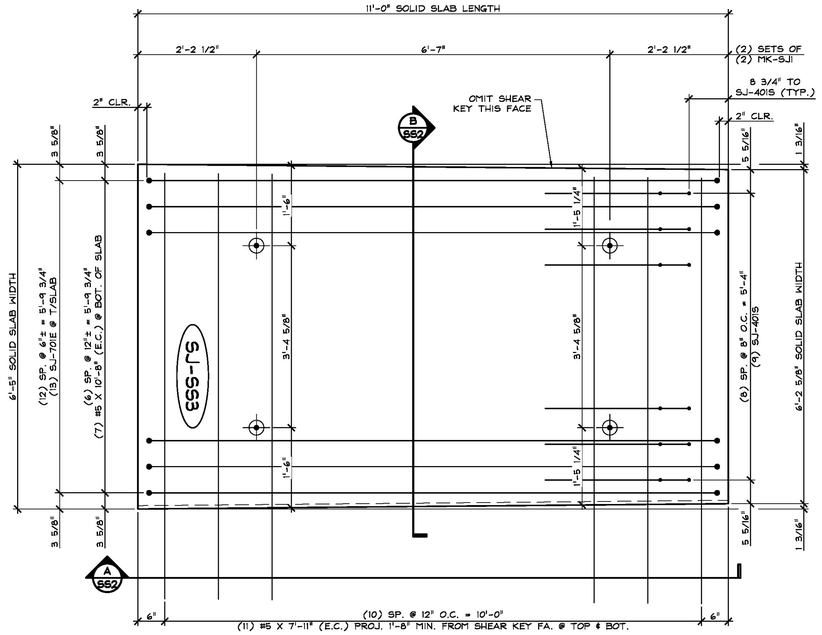

1 SS2 PLAN VIEW IN FORM
3/4" = 1'-0"

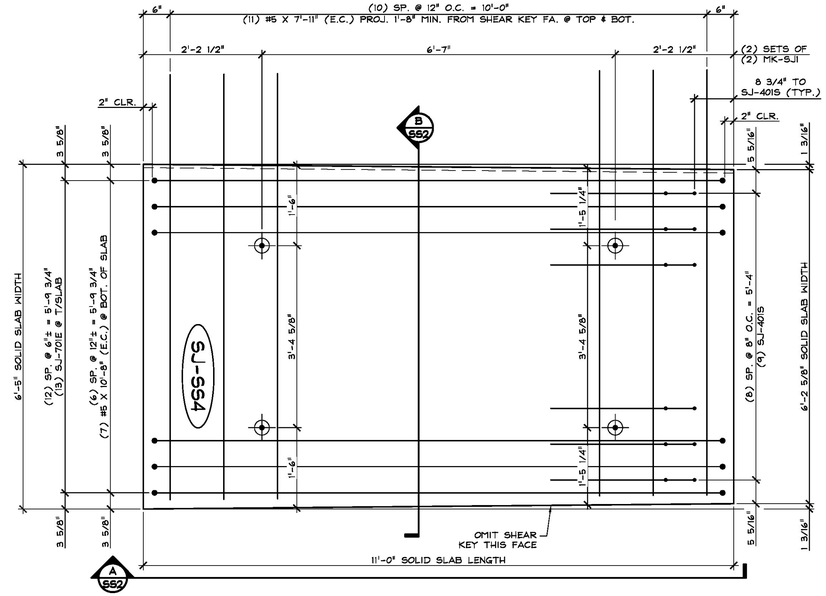

2 SS2 PLAN VIEW IN FORM
3/4" = 1'-0"

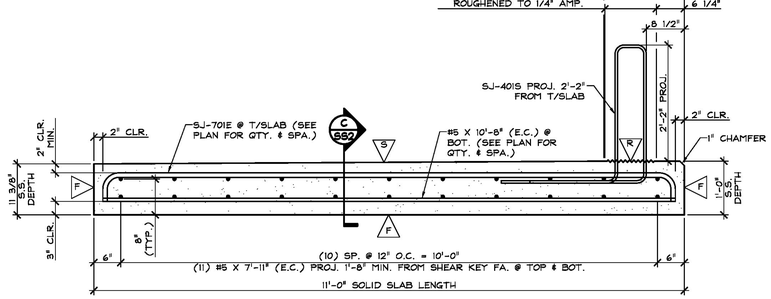

A SS2 LONGITUDINAL SECTION
3/4" = 1'-0"

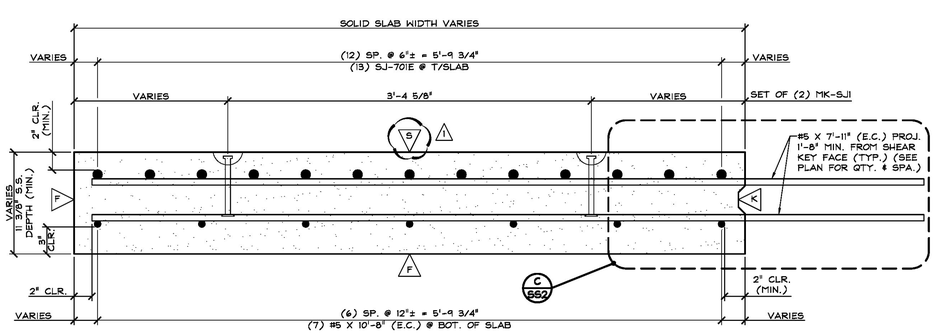

B SS2 TRANSVERSE SECTION
1 1/2" = 1'-0"

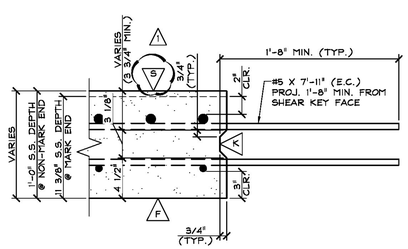

C SS2 SHEAR KEY SECTION
1 1/2" = 1'-0"

Vermont Agency of Transportation
RECEIVED
CK'D BY CLD OK'D BY WSP
March 6, 2017
RESUBMIT NO Approved
BY WPELLETIER DATE 03/16/2017

SHOP DRAWING REVIEW

X REVIEWED AS REQUIRED BY THE CONSTRUCTION CONTRACT DOCUMENTS AND APPROVED, BUT ONLY FOR CONFORMANCE TO THE DESIGN CONCEPT OF THE WORK, AND SUBJECT TO FURTHER LIMITATIONS AND REQUIREMENTS CONTAINED IN THE CONSTRUCTION CONTRACT DOCUMENTS.

☐ REJECTED ☐ REVISE AND RESUBMIT ☐ APPROVED AS NOTED

CORRECTIONS OR COMMENTS MADE ON THE SHOP DRAWINGS DURING THIS REVIEW DID NOT RELIEVE CONTRACTOR FROM COMPLIANCEWITH REQUIREMENTS OF THE DRAWINGS AND SPECIFICATIONS. THIS CHECK IS ONLY FOR REVIEW OF GENERAL CONFORMANCE WITH THE DESIGN CONCEPT OF THE PROJECT AND GENERAL COMPLIANCE WITH THE INFORMATION GIVEN IN THE CONTRACT DOCUMENTS. THE CONTRACTOR IS RESPONSIBLE FOR: CONFIRMING AND CORRELATING ALL QUANTITIES AND DIMENSIONS; SELECTING FABRICATION PROCESSES AND TECHNIQUES OF CONSTRUCTION; COORDINATING THEIR WORK WITH THAT OF ALL OTHER TRADES; AND PERFORMING THEIR WORK IN A SAFE AND SATISFACTORY MANNER.

CLD Consulting Engineers
540 Commercial Street
Manchester, NH 03101
603-668-8223

Job Number: 14-0116
Reviewed by: AEG
Date: 3/16/17

A DENOTES FORM FINISH

V DENOTES SMOOTH FLOAT FINISH

R DENOTES ROUGHENED FINISH (SEE GENERAL NOTE #10, SHEET 'FI')

R DENOTES RAKE FINISH ROUGHENED TO 1/4" AMPLITUDE

SHOP NOTE:
28-DAY STRENGTH = 5,000 PSI
HANDLING STRENGTH = 3,000 PSI
DESIGN MIX #445MSCC

MARK:	SJ-SS3	QTY.:	1	WT.:	5.09 T	VOL.:	2.52 cy
MARK:	SJ-SS4	QTY.:	1	WT.:	5.09 T	VOL.:	2.52 cy

MATERIAL LIST / SOLID SLAB

ITEM	MARK	DESCRIPTION	QTY./SLAB SS3	QTY./SLAB SS4
1	SJ-4015	#4 BENT BAR (STAINLESS STEEL)	9	9
2				
3		#5 x 7'-11" (EPOXY COATED)	22	22
4		#5 X 10'-8" (EPOXY COATED)	7	7
5				
6	SJ-701E	#7 BENT BAR (EPOXY COATED)	13	13
7				
8	MK-SJI	DAYTON 2T X 6 3/4" SWIFT LIFT (GALV.) (DOMESTIC)	4	4
9				
10				

1 3-6-17 REVISED AS NOTED

APPROVAL STAMP:

J.P. CARRARA & SONS INC.
Precast & Prestress Manufacturer
2464 CASE STR., MIDDLEBURY, VERMONT 05753 Phone:(802)388-6361 Fax:(802)388-9010

J.P. SICARD, INC.
CONTRACTOR
BARTON, VERMONT

STATE OF VERMONT AGENCY OF TRANSPORTATION
COUNTY OF CALEDONIA

TOWN OF ST. JOHNSBURY
VT ROUTE 2B, URBAN MINOR ARTERIAL
BRIDGE NO.: 6 PROJECT NO.: BF 7000(20)

PRECAST SOLID SLAB DETAILS

DATE: FEB. 6, 2017
SCALE: NOTED
CHKD: M.H. DFTM: A.S.
JOB NO: 23507-017
DWG. NO: SS2

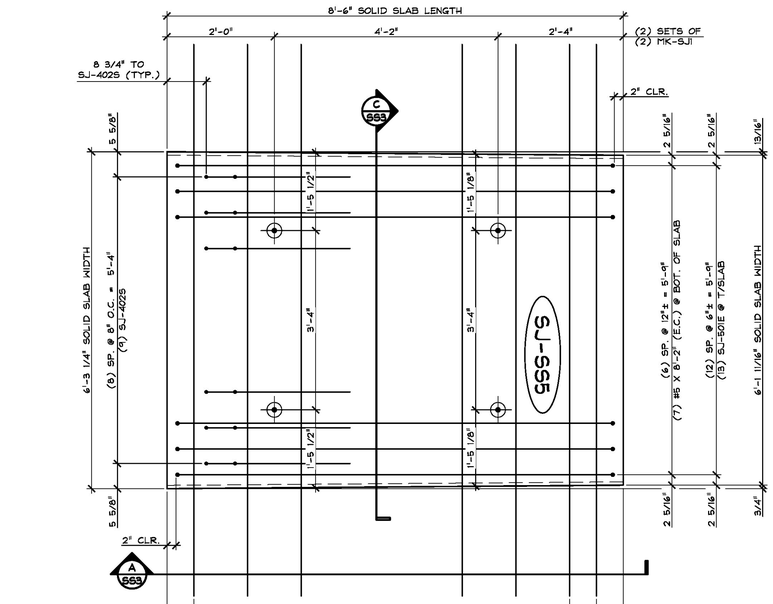

1 SS3 PLAN VIEW IN FORM
3/4" = 1'-0"

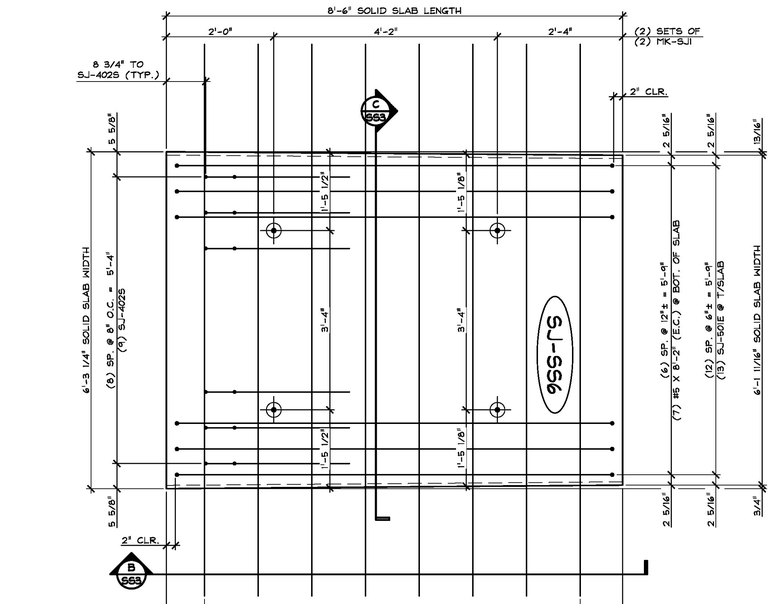

2 SS3 PLAN VIEW IN FORM
3/4" = 1'-0"

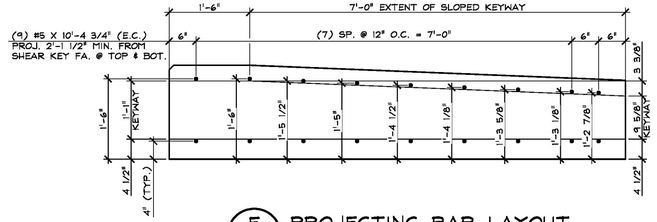

E SS3 PROJECTING BAR LAYOUT
3/4" = 1'-0"

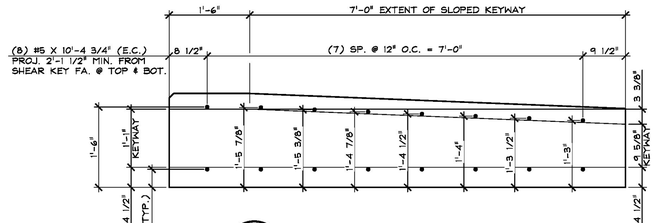

F SS3 PROJECTING BAR LAYOUT
3/4" = 1'-0"

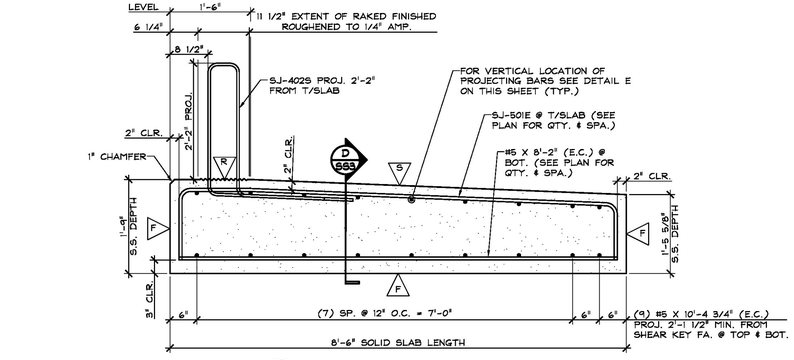

A SS3 LONGITUDINAL SECTION
3/4" = 1'-0"

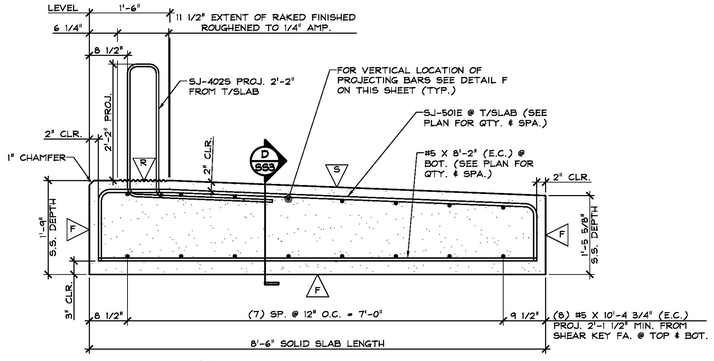

B SS3 LONGITUDINAL SECTION
3/4" = 1'-0"

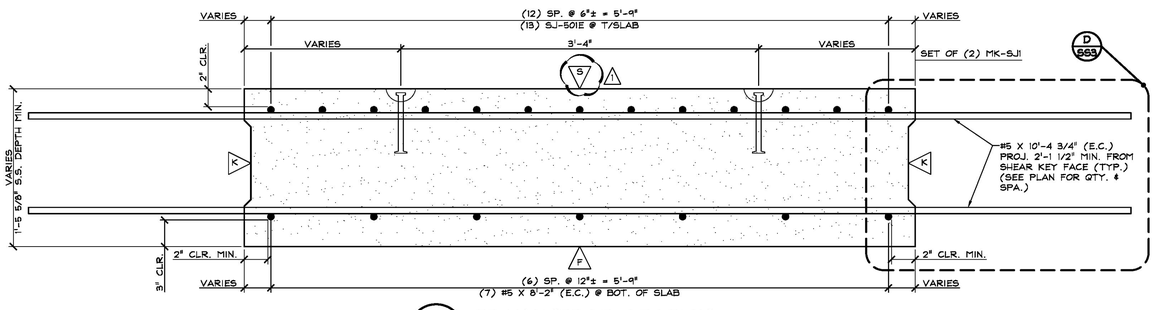

C SS3 TRANSVERSE SECTION
1 1/2" = 1'-0"

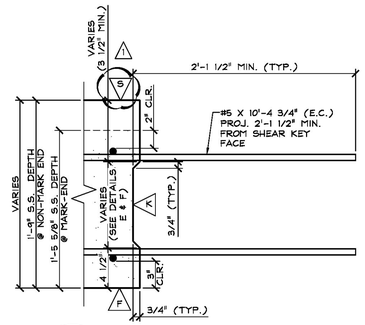

D SS3 SHEAR KEY SECTION
1 1/2" = 1'-0"

Vermont Agency of Transportation
RECEIVED
CK'D BY CLD
OK'D BY WBP
March 6, 2017
Approved
DATE 03/16/2017
RESUBMIT NO
BY WPELLETIER

1 3-6-17 REVISED AS NOTED

A DENOTES FORM FINISH
V DENOTES SMOOTH FLOAT FINISH
4 DENOTES ROUGHENED FINISH (SEE GENERAL NOTE #10, SHEET 'F1')
4 DENOTES RAKE FINISH ROUGHENED TO 1/4" AMPLITUDE

SHOP DRAWING REVIEW

X REVIEWED AS REQUIRED BY THE CONSTRUCTION CONTRACT DOCUMENTS AND APPROVED, BUT ONLY FOR CONFORMANCE TO THE DESIGN CONCEPT OF THE WORK, AND SUBJECT TO FURTHER LIMITATIONS AND REQUIREMENTS CONTAINED IN THE CONSTRUCTION CONTRACT DOCUMENTS.

☐ REJECTED ☐ REVISE AND RESUBMIT ☐ APPROVED AS NOTED

CORRECTIONS OR COMMENTS MADE ON THE SHOP DRAWINGS DURING THIS REVIEW DO NOT RELIEVE CONTRACTOR FROM COMPLIANCEWITH REQUIREMENTS OF THE DRAWINGS AND SPECIFICATIONS. THIS CHECK IS ONLY FOR REVIEW OF GENERAL CONFORMANCE WITH THE DESIGN CONCEPT OF THE PROJECT AND GENERAL COMPLIANCE WITH THE INFORMATION GIVEN IN THE CONTRACT DOCUMENTS. THE CONTRACTOR IS RESPOINSIBLE FOR: CONFIRMING AND CORRELATING ALL QUANTITIES AND DIMENSIONS; SELECTING FABRICATION PROCESSES AND TECHNIQUES OF CONSTRUCTION; COORDINATING THEIR WORK WITH THAT OF ALL OTHER TRADES; AND PERFORMING THEIR WORK IN A SAFE AND SATISFACTORY MANNER.

CLD Consulting Engineers, 540 Commercial Street, Manchester, NH 03101, 603-668-8223

Job Number: 14-0116
Reviewed by: AEG
Date: 3/16/17

SHOP NOTE:
28-DAY STRENGTH = 5,000 PSI
HANDLING STRENGTH = 3,000 PSI
DESIGN MIX #445MSCC

MARK: SJ-SS5	QTY.: 1	WT.: 6.47 T	VOL.: 3.19 cy
MARK: SJ-SS6	QTY.: 2	WT.: 6.47 T	VOL.: 3.19 cy

MATERIAL LIST / SOLID SLAB

ITEM	MARK	DESCRIPTION	QTY./SLAB SS5	QTY./SLAB SS6
1	SJ-4025	#4 BENT BAR (STAINLESS STEEL)	9	9
2				
3	SJ-501E	#5 BENT BAR (EPOXY COATED)	13	13
4		#5 x 8'-2" (EPOXY COATED)	7	7
5		#5 X 10'-4 3/4" (EPOXY COATED)	18	16
6				
7	MK-SJI	DAYTON 2T X 6 3/4" SWIFT LIFT (GALV.) (DOMESTIC)	4	4
8				
9				
10				

APPROVAL STAMP:

J.P. CARRARA & SONS INC.
Precast & Prestress Manufacturer
2494 CASE STR., MIDDLEBURY, VERMONT 05753 Phone:(802)388-6361 Fax:(802)388-9010

J.P. SICARD, INC.
CONTRACTOR
BARTON, VERMONT

STATE OF VERMONT AGENCY OF TRANSPORTATION
COUNTY OF CALEDONIA

TOWN OF ST. JOHNSBURY
VT ROUTE 2B, URBAN MINOR ARTERIAL
BRIDGE NO.: 6 PROJECT NO.: BF 7000(20)

PRECAST SOLID SLAB DETAILS

DATE: FEB. 6, 2017
SCALE: NOTED
CHKD: M.W. DFTM: A.S.
JOB NO: 23507-017
DWG. NO: SS3

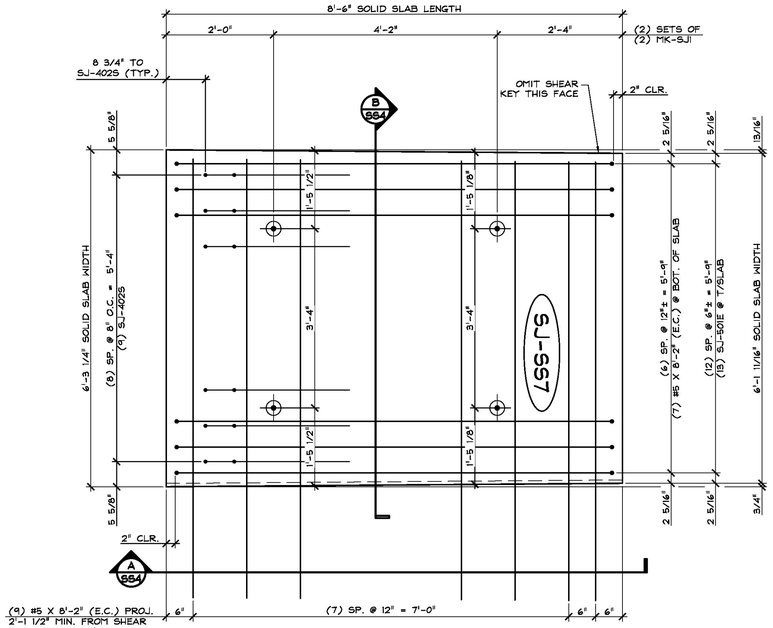

1 SS4 PLAN VIEW IN FORM
3/4" = 1'-0"

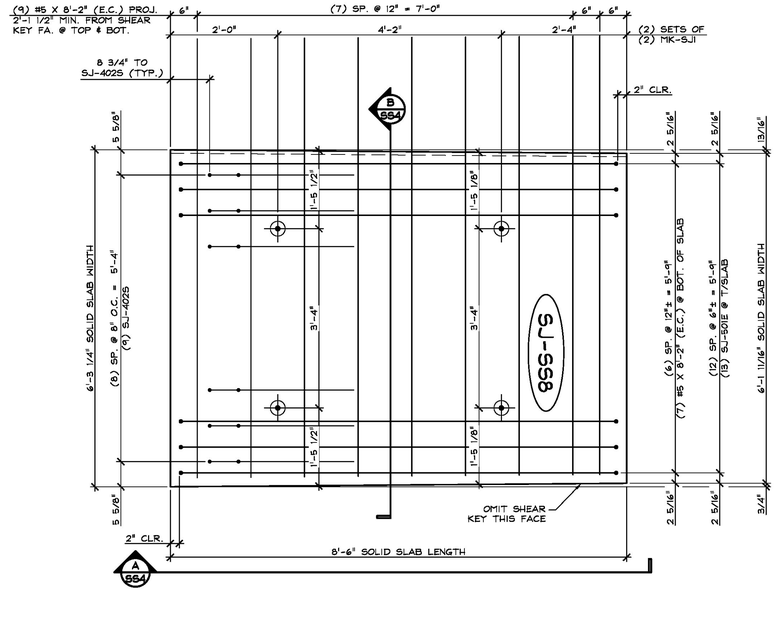

2 SS4 PLAN VIEW IN FORM
3/4" = 1'-0"

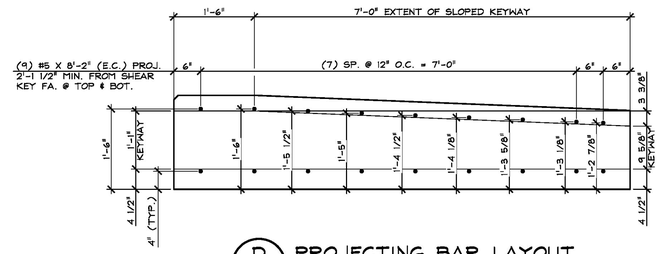

D SS4 PROJECTING BAR LAYOUT
3/4" = 1'-0"

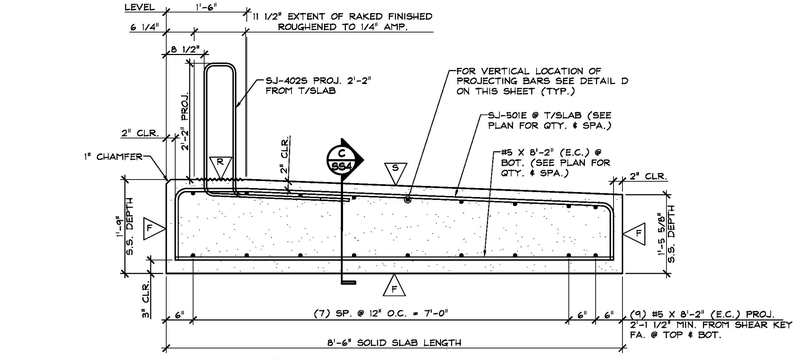

A SS4 LONGITUDINAL SECTION
3/4" = 1'-0"

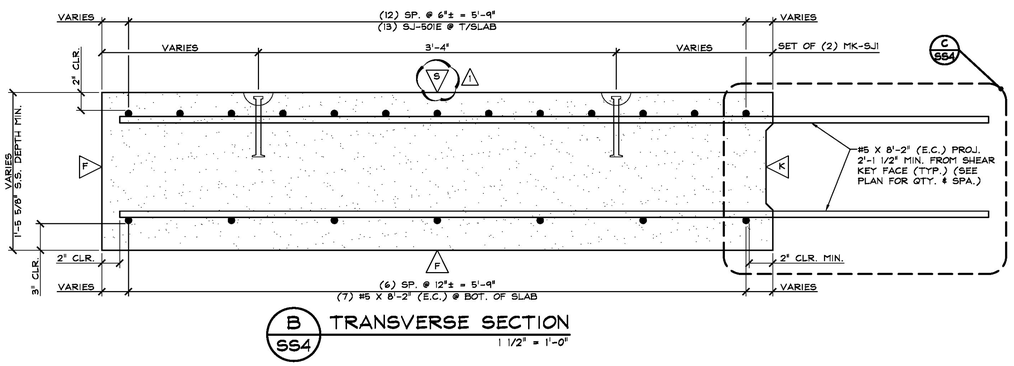

B SS4 TRANSVERSE SECTION
1 1/2" = 1'-0"

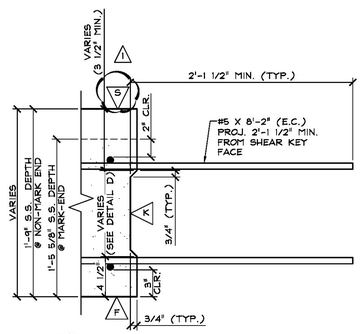

C SS4 SHEAR KEY SECTION
1 1/2" = 1'-0"

1 3-6-17 REVISED AS NOTED

Vermont Agency of Transportation
RECEIVED
CK'D BY CLD OK'D BY WBP
RESUBMIT NO March 6, 2017
BY WPELLETIER DATE 03/16/2017 Approved

SHOP DRAWING REVIEW

[X] REVIEWED AS REQUIRED BY THE CONSTRUCTION CONTRACT DOCUMENTS AND APPROVED, BUT ONLY FOR CONFORMANCE TO THE DESIGN CONCEPT OF THE WORK, AND SUBJECT TO FURTHER LIMITATIONS AND REQUIREMENTS CONTAINED IN THE CONSTRUCTION CONTRACT DOCUMENTS.

[ ] REJECTED [ ] REVISE AND RESUBMIT [ ] APPROVED AS NOTED

CORRECTIONS OR COMMENTS MADE ON THE SHOP DRAWINGS DURING THIS REVIEW DID NOT RELIEVE CONTRACTOR FROM COMPLIANCEWITH REQUIREMENTS OF THE DRAWINGS AND SPECIFICATIONS. THIS CHECK IS ONLY FOR REVIEW OF GENERAL CONFORMANCE WITH THE DESIGN CONCEPT OF THE PROJECT AND GENERAL COMPLIANCE WITH THE INFORMATION GIVEN IN THE CONTRACT DOCUMENTS. THE CONTRACTOR IS RESPOINSIBLE FOR: CONFIRMING AND CORRELATING ALL QUANTITIES AND DIMENSIONS; SELECTING FABRICATION PROCESSES AND TECHNIQUES OF CONSTRUCTION; COORDINATING THEIR WORK WITH THAT OF ALL OTHER TRADES; AND PERFORMING THEIR WORK IN A SAFE AND SATISFACTORY MANNER.

CLD Consulting Engineers
540 Commercial Street
Manchester, NH 03101
603-669-6223

Job Number: 14-0116
Reviewed by: AEG
Date: 3/16/17

Δ DENOTES FORM FINISH

▽ DENOTES SMOOTH FLOAT FINISH

A DENOTES ROUGHENED FINISH (SEE GENERAL NOTE #10, SHEET 'F1')

A DENOTES RAKE FINISH ROUGHENED TO 1/4" AMPLITUDE

SHOP NOTE:
28-DAY STRENGTH = 5,000 PSI
HANDLING STRENGTH = 3,000 PSI
DESIGN MIX #445M5CC

MARK: SJ-SS7	QTY.: 1	WT.: 6.47 T	VOL.: 3.19 cy
MARK: SJ-SS8	QTY.: 1	WT.: 6.47 T	VOL.: 3.19 cy

MATERIAL LIST / SOLID SLAB

ITEM	MARK	DESCRIPTION	QTY./SLAB SS7	QTY./SLAB SS8
1	SJ-4025	#4 BENT BAR (STAINLESS STEEL)	9	9
2				
3	SJ-501E	#5 BENT BAR (EPOXY COATED)	13	13
4		#5 x 8'-2" (EPOXY COATED)	25	25
5				
6	MK-SJI	DAYTON 2T X 6 3/4" SWIFT LIFT (GALV.) (DOMESTIC)	4	4
7				
8				
9				
10				

APPROVAL STAMP:

J.P. CARRARA & SONS INC.
Precast & Prestress Manufacturer
2494 CASE STR., MIDDLEBURY, VERMONT 05753 Phone:(802)388-6361 Fax:(802)388-9010

J.P. SICARD, INC.
CONTRACTOR
BARTON, VERMONT

STATE OF VERMONT AGENCY OF TRANSPORTATION
COUNTY OF CALEDONIA

TOWN OF ST. JOHNSBURY
VT ROUTE 2B, URBAN MINOR ARTERIAL
BRIDGE NO.: 6 PROJECT NO.: BF 7000(20)

PRECAST SOLID SLAB DETAILS

DATE: FEB. 6, 2017
SCALE: NOTED
CHKD: M.W. DFTM: A.S.
JOB NO: 23507-017
DWG. NO: SS4

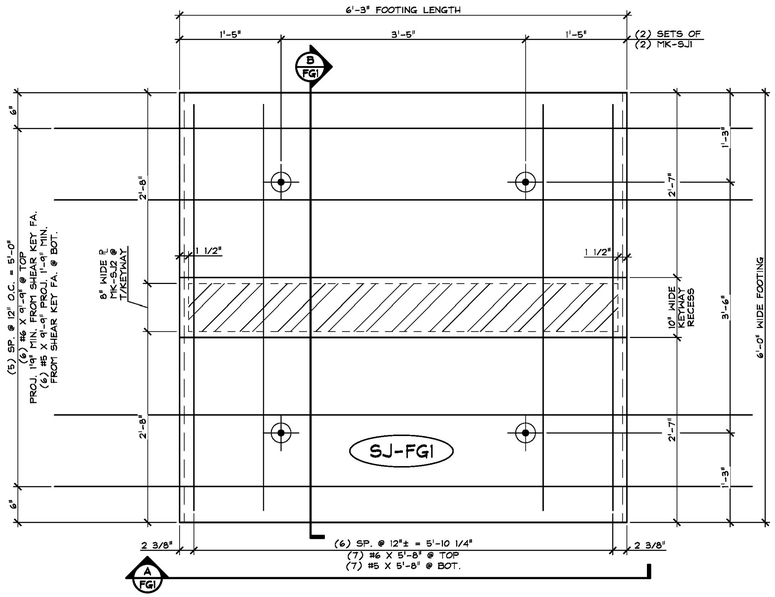

1 FG1 PLAN VIEW IN FORM
1" = 1'-0"

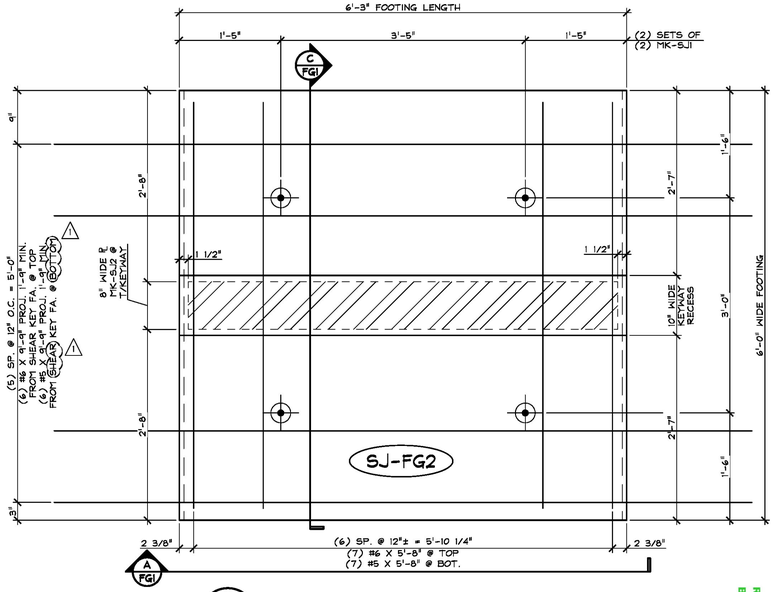

2 FG1 PLAN VIEW IN FORM
1" = 1'-0"

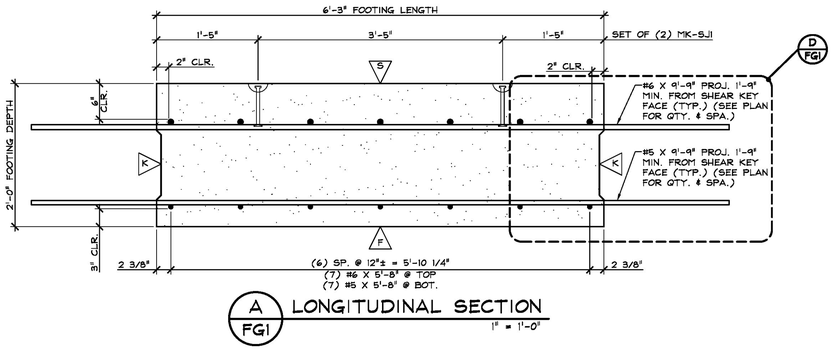

A FG1 LONGITUDINAL SECTION
1" = 1'-0"

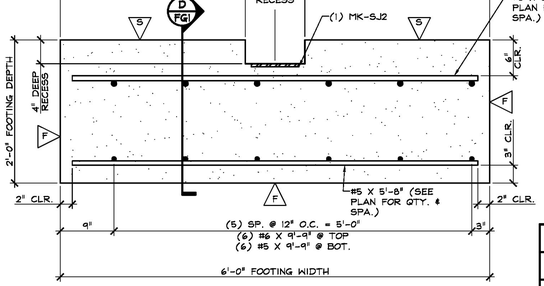

C FG1 TRANSVERSE SECTION
1" = 1'-0"

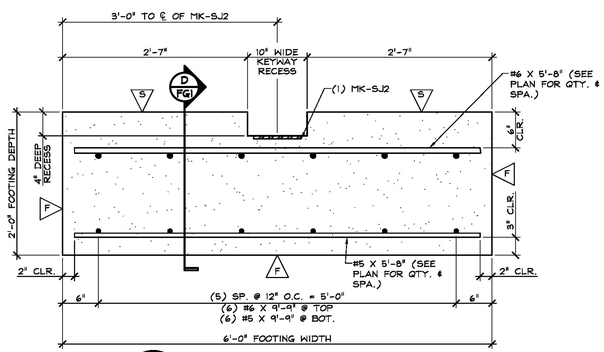

B FG1 TRANSVERSE SECTION
1" = 1'-0"

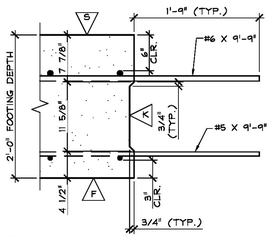

D FG1 SHEAR KEY SECTION
1" = 1'-0"

Δ DENOTES FORM FINISH

Δ1 (S) DENOTES SMOOTH FLOAT FINISH

Δ2 DENOTES ROUGHENED FINISH (SEE GENERAL NOTE #10, SHEET 'F1')

SHOP NOTE:
28-DAY STRENGTH = 5,000 PSI
HANDLING STRENGTH = 3,000 PSI
DESIGN MIX #445M5CC

MARK:	SJ-FG1	QTY.: 2	WT.:	5.49 T	VOL.:	2.71 cy
MARK:	SJ-FG2	QTY.: 4	WT.:	5.49 T	VOL.:	2.71 cy

MATERIAL LIST / FOOTING

ITEM	MARK	DESCRIPTION	QTY./SLAB FG1	QTY./SLAB FG2
1		Δ1		
2		#5 x 5'-8" (BLACK)	7	7
3		#5 x 9'-9" (BLACK)	6	6
4				
5		#6 x 5'-8" (BLACK)	7	7
6		#6 x 9'-9" (BLACK)	6	6
7				
8	MK-SJI	DAYTON 2T x 6 3/4" SWIFT LIFT (GALV.) (DOMESTIC)	4	4
9	MK-SJ2	℄ 1/2" X 8" X 6'-0" A36 BLACK STEEL (BY OTHERS)	1	1
10				

Δ1 3-6-17 REVISED AS NOTED

APPROVAL STAMP:

J.P. CARRARA & SONS INC.
Precast & Prestress Manufacturer
2454 OSE STR., MIDDLEBURY, VERMONT 05753 Phone:(802)388-6361 Fax:(802)388-9010

J.P. SICARD, INC.
CONTRACTOR
BARTON, VERMONT

STATE OF VERMONT AGENCY OF TRANSPORTATION
COUNTY OF CALEDONIA

TOWN OF ST. JOHNSBURY
VT ROUTE 2B, URBAN MINOR ARTERIAL
BRIDGE NO.: 6 PROJECT NO.: BF 7000(20)

PRECAST FOOTING DETAILS

DATE: FEB. 6, 2017
SCALE: NOTED
CHKD: M.W. DFTM: A.S.
JOB NO: 23507-017
DWG. NO: FG1

Vermont Agency of Transportation
RECEIVED
CK'D BY CLD OK'D BY WSP
RESUBMIT NO
BY WPELLETIER DATE 03/16/2017
March 6, 2017
Approved

SHOP DRAWING REVIEW

☒ REVIEWED AS REQUIRED BY THE CONSTRUCTION CONTRACT DOCUMENTS AND APPROVED, BUT ONLY FOR CONFORMANCE TO THE DESIGN CONCEPT OF THE WORK, AND SUBJECT TO FURTHER LIMITATIONS AND REQUIREMENTS CONTAINED IN THE CONSTRUCTION CONTRACT DOCUMENTS.

☐ REJECTED ☐ REVISE AND RESUBMIT ☐ APPROVED AS NOTED

CORRECTIONS OR COMMENTS MADE ON THE SHOP DRAWINGS DURING THIS REVIEW DID NOT RELIEVE CONTRACTOR FROM COMPLIANCEWITH REQUIREMENTS OF THE DRAWINGS AND SPECIFICATIONS. THIS CHECK IS ONLY FOR REVIEW OF GENERAL CONFORMANCE WITH THE DESIGN CONCEPT OF THE PROJECT AND GENERAL COMPLIANCE WITH THE INFORMATION GIVEN IN THE CONTRACT DOCUMENTS. THE CONTRACTOR IS RESPOINSIBLE FOR: CONFIRMING AND CORRELATING ALL QUANTITIES AND DIMENSIONS: SELECTING FABRICATION PROCESSES AND TECHNIQUES OF CONSTRUCTION: COORDINATING THEIR WORK WITH THAT OF ALL OTHER TRADES: AND PERFORMING THEIR WORK IN A SAFE AND SATISFACTORY MANNER.

CLD Consulting Engineers
540 Commercial Street
Manchester, NH 03101
603-668-8223

Job Number: 14-0116
Reviewed by: AEG
Date: 3/16/17

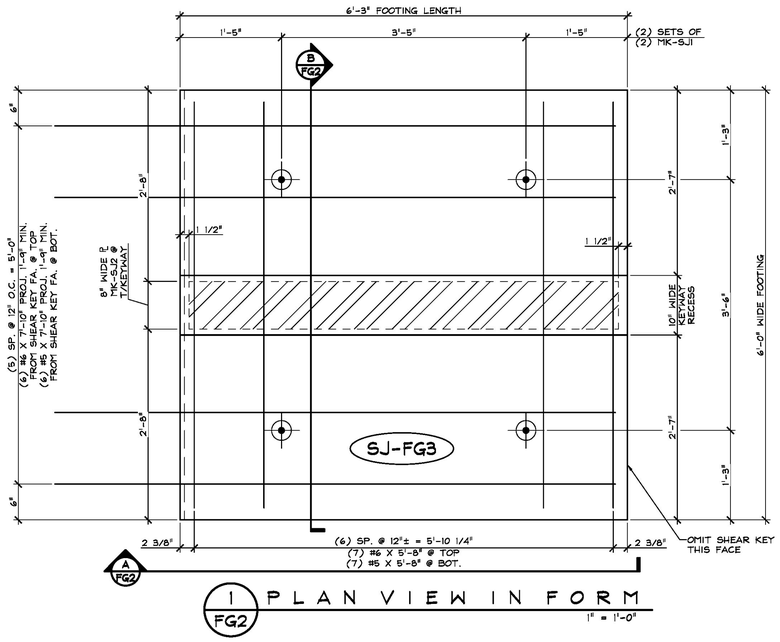

1 FG2 PLAN VIEW IN FORM

1" = 1'-0"

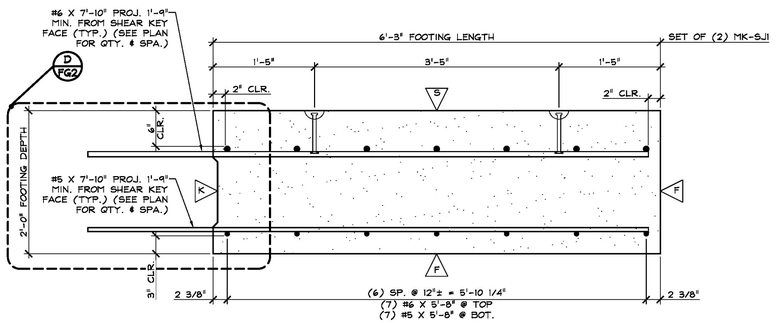

A FG2 LONGITUDINAL SECTION

1" = 1'-0"

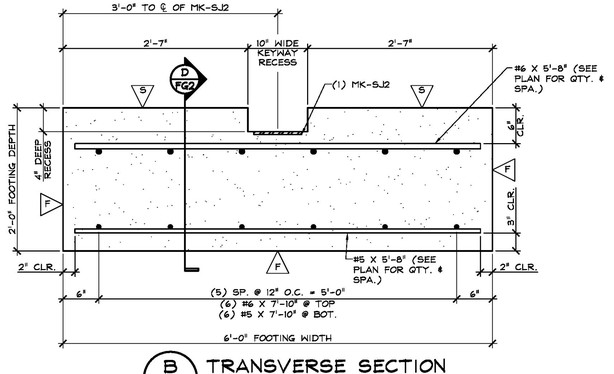

B FG2 TRANSVERSE SECTION

1" = 1'-0"

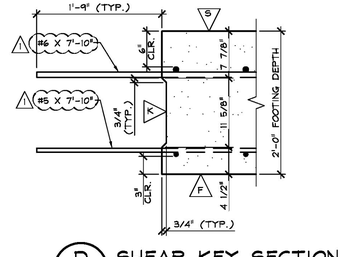

D FG2 SHEAR KEY SECTION

1" = 1'-0"

Δ DENOTES FORM FINISH

▽ DENOTES SMOOTH FLOAT FINISH

Δ1 DENOTES ROUGHENED FINISH (SEE GENERAL NOTE #10, SHEET 'F1')

SHOP NOTE:
28-DAY STRENGTH = 5,000 PSI
HANDLING STRENGTH = 3,000 PSI
DESIGN MIX #445MSCC

MARK: SJ-FG3	QTY.: 4	WT.: 5.49 T	VOL.: 2.71 cy

MATERIAL LIST / FOOTING

ITEM	MARK	DESCRIPTION	QTY.
1		Δ	
2		#5 x 5'-8" (BLACK)	7
3		#5 x 7'-10" (BLACK)	6
4			
5		#6 x 5'-8" (BLACK)	7
6		#6 x 7'-10" (BLACK)	6
7			
8	MK-SJI	DAYTON 2T x 6 3/4" SWIFT LIFT (GALV.) (DOMESTIC)	4
9	MK-SJ2	℄ 1/2" X 8" X 6'-0" A36 BLACK STEEL (BY OTHERS)	1
10			

Δ1 3-6-17 REVISED AS NOTED

APPROVAL STAMP:

J.P. CARRARA & SONS INC.
Precast & Prestress Manufacturer
2464 CASE STR., MIDDLEBURY, VERMONT 05753 Phone:(802)388-6361 Fax:(802)388-9010

J.P. SICARD, INC.
CONTRACTOR
BARTON, VERMONT

STATE OF VERMONT AGENCY OF TRANSPORTATION
COUNTY OF CALEDONIA

TOWN OF ST. JOHNSBURY
VT ROUTE 2B, URBAN MINOR ARTERIAL
BRIDGE NO.: 6 PROJECT NO.: BF 7000(20)

PRECAST FOOTING DETAILS

DATE: FEB. 6, 2017
SCALE: NOTED
CHKD: M.W. DFTM: A.S.
JOB NO: 23507-017
DWG. NO: FG2

Vermont Agency of Transportation
RECEIVED
CK'D BY CLD OK'D BY WBP
March 6, 2017
RESUBMIT NO
BY WPELLETIER Approved
DATE 03/16/2017

SHOP DRAWING REVIEW

☒ REVIEWED AS REQUIRED BY THE CONSTRUCTION CONTRACT DOCUMENTS AND APPROVED, BUT ONLY FOR CONFORMANCE TO THE DESIGN CONCEPT OF THE WORK, AND SUBJECT TO FURTHER LIMITATIONS AND REQUIREMENTS CONTAINED IN THE CONSTRUCTION CONTRACT DOCUMENTS.

☐ REJECTED ☐ REVISE AND RESUBMIT ☐ APPROVED AS NOTED

CORRECTIONS OR COMMENTS MADE ON THE SHOP DRAWINGS DURING THIS REVIEW DID NOT RELIEVE CONTRACTOR FROM COMPLIANCEWITH REQUIREMENTS OF THE DRAWINGS AND SPECIFICATIONS. THIS CHECK IS ONLY FOR REVIEW OF GENERAL CONFORMANCE WITH THE DESIGN CONCEPT OF THE PROJECT AND GENERAL COMPLIANCE WITH THE INFORMATION GIVEN IN THE CONTRACT DOCUMENTS. THE CONTRACTOR IS RESPONSIBLE FOR: CONFIRMING AND CORRELATING ALL QUANTITIES AND DIMENSIONS; SELECTING FABRICATION PROCESSES AND TECHNIQUES OF CONSTRUCTION; COORDINATING THEIR WORK WITH THAT OF ALL OTHER TRADES; AND PERFORMING THEIR WORK IN A SAFE AND SATISFACTORY MANNER.

CLD Consulting Engineers
540 Commercial Street
Manchester, NH 03101
603-668-8223

Job Number: 14-0116
Reviewed by: AEG
Date: 3/16/17

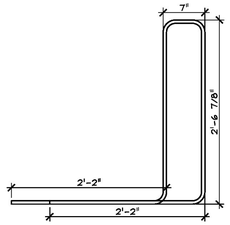

SJ-401S
#4 BENT BAR
(STAINLESS STEEL)
USE 3'ϕ PIN
(45) REQUIRED

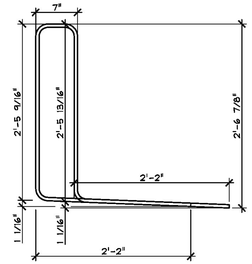

SJ-402S
#4 BENT BAR
(STAINLESS STEEL)
USE 3'ϕ PIN
(45) REQUIRED

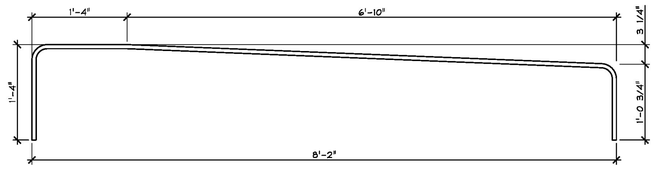

SJ-501E
#5 BENT BAR
EPOXY COATED (E.C.)
USE 3 3/4'ϕ PIN
(65) REQUIRED

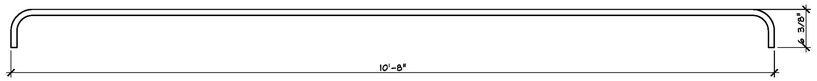

SJ-701E
#7 BENT BAR
EPOXY COATED (E.C.)
USE 5 1/4'ϕ PIN
(66) TOTAL
(65 REQUIRED + 1 FOR SAMPLING) ⚠

MISCELLANEOUS MATERIALS

ITEM	MARK	QTY.	DESCRIPTION	REMARKS	
1		3	#4 x 3'-0" (STAINLESS STEEL)	FOR SAMPLING	
2					
3					
4					
5					
6		44	#5 x 7'-11" (EPOXY COATED)		SOLID SLABS
7		71	#5 x 8'-2" (EPOXY COATED)		
8		(67) ⚠	#5 x 9'-9" (EPOXY COATED)	(+1 FOR SAMPLING) ⚠	
9		50	#5 x 10'-4 3/4" (EPOXY COATED)		
10		35	#5 x 10'-8" (EPOXY COATED)		
11					
12	MK-SJ1	40	(DAYTON 2T X 6 3/4" SWIFT LIFT (GALV.) (DOMESTIC)) ⚠		
13					
14		70	#5 x 5'-8" (BLACK)		FOOTINGS
15		24	#5 x 7'-10" (BLACK)		
16		(37) ⚠	#5 x 9'-9" (BLACK) ⚠	(+1 FOR SAMPLING) ⚠	
17					
18		70	#6 x 5'-8" (BLACK)		
19		24	#6 x 7'-10" (BLACK)		
20		(37) ⚠	#6 x 9'-9" (BLACK)	(+1 FOR SAMPLING) ⚠	
21					
22	MK-SJ1	40	(DAYTON 2T X 6 3/4" SWIFT LIFT (GALV.) (DOMESTIC)) ⚠		
23	MK-SJ2	10	℄ 1/2" X 8" X 6'-0" A36 BLACK STEEL	(SUPPLIED BY OTHERS)	
24					
25					

PRECAST SOLID SLABS

Vermont Agency of Transportation
RECEIVED
CK'D BY CLD OK'D BY VBP
March 6, 2017
RESUBMIT NO Approved
BY VPELLETIER DATE 03/16/2017

SHOP DRAWING REVIEW

☒ REVIEWED AS REQUIRED BY THE CONSTRUCTION CONTRACT DOCUMENTS AND APPROVED, BUT ONLY FOR CONFORMANCE TO THE DESIGN CONCEPT OF THE WORK, AND SUBJECT TO FURTHER LIMITATIONS AND REQUIREMENTS CONTAINED IN THE CONSTRUCTION CONTRACT DOCUMENTS.

☐ REJECTED ☐ REVISE AND RESUBMIT ☐ APPROVED AS NOTED

CORRECTIONS OR COMMENTS MADE ON THE SHOP DRAWINGS DURING THIS REVIEW DID NOT RELIEVE CONTRACTOR FROM COMPLIANCEWITH REQUIREMENTS OF THE DRAWINGS AND SPECIFICATIONS. THIS CHECK IS ONLY FOR REVIEW OF GENERAL CONFORMANCE WITH THE DESIGN CONCEPT OF THE PROJECT AND GENERAL COMPLIANCE WITH THE INFORMATION GIVEN IN THE CONTRACT DOCUMENTS. THE CONTRACTOR IS RESPOINSIBLE FOR: CONFIRMING AND CORRELATING ALL QUANTITIES AND DIMENSIONS; SELECTING FABRICATION PROCESSES AND TECHNIQUES OF CONSTRUCTION; COORDINATING THEIR WORK WITH THAT OF ALL OTHER TRADES; AND PERFORMING THEIR WORK IN A SAFE AND SATISFACTORY MANNER.

CLD Consulting Engineers
540 Commercial Street
Manchester, NH 03101
603-668-8223

Job Number: 14-0116
Reviewed by: AEG
Date: 3/16/17

⚠ 3-6-17 REVISED AS NOTED

APPROVAL STAMP:

J.P. CARRARA & SONS INC.
Precast & Prestress Manufacturer
2494 CASE STR., MIDDLEBURY, VERMONT 05753 Phone:(802)388-6361 Fax:(802)388-9010

J.P. SICARD, INC.
CONTRACTOR
BARTON, VERMONT

STATE OF VERMONT AGENCY OF TRANSPORTATION
COUNTY OF CALEDONIA

TOWN OF ST. JOHNSBURY
VT ROUTE 2B, URBAN MINOR ARTERIAL
BRIDGE NO.: 6 PROJECT NO.: BF 7000(20)

MATERIAL LIST

DATE: FEB. 6, 2017
SCALE: NOTED
CHKD: M.W. DFTM: A.S.
JOB NO: 23507-017
DWG. NO: M1

VERMONT RTE 2B - BRIDGE # 6
PROJECT BF 7000 (20)
ST. JOHNSBURY, VT



LIFT DESIGN CALCULATIONS

(WORK WITH JPC SHOP DRAWINGS)

SOLID SLABS

$f'_c = 5000$ PSI $\quad f'_{ci} = 3000$ PSI

$W_{T\text{-}MAX.} = 6.47^T = 12.94^K$

THERE ARE (4) LIFT LOCATIONS PER SLAB AND ASSUMING A MINIMUM LIFT ANGLE OF 60° FROM THE HORIZONTAL:

$$\text{DESIGN LOAD}/\text{LIFT LOCATION} = \frac{12.94^{IC}}{(4)(\sin 60°)} = 3.74^K$$

FROM ATTACHED DAYTON SUPERIOR PRODUCT LITERATURE

USE 2-TON x 6 3/4" LONG SWIFT LIFT ANCHORS

SWL (4:1 S.F.) = $4{,}000^{LBS} > 3{,}740^{LBS}$, O.K. ✓

FOOTINGS

$f'_c = 5000 PSI$ $f'_{ci} = 3000 PSI$

$W_{t\text{-}MAX} = 5.49 T = 11.0 K$

THERE ARE (4) LIFT LOCATIONS PER SLAB AND ASSUMING A MINIMUM LIFT ANGLE OF 60° FROM THE HORIZONTAL:

$$\text{DESIGN LOAD / LIFT LOCATION} = \frac{11.0 K}{(4)\sin 60°} = 3.18 K$$

FROM ATTACHED DAYTON SUPERIOR PRODUCT LITERATURE,

USE 2-TON x 6 3/4" LONG SWIFT LIFT ANCHORS

SWL (4:1 S.F.) = 4,000 LB > 3,180 LB. O.K. ✓

P-52 Swift Lift® Anchor Tensile and Shear Capacity

When anchors are used in the face of thin concrete elements

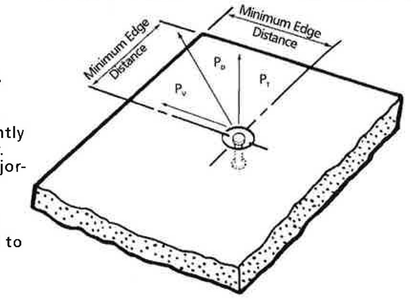

The following table lists the P-52 Swift Lift Anchors that are currently manufactured. Other sizes and lengths are available on special order. However, the sizes and lengths of anchors shown will handle the majority of flat precast concrete elements.

When the P-52 Swift Lift Anchor is properly embedded in normal weight concrete, the tabulated working loads are applicable for any direction of load. This applies even if the direction of load is parallel to the axis of the anchor, perpendicular to it or at any other angle.

Minimum distance between anchors is twice the minimum edge distance.

It is critical to remember that in order to obtain the safe working loads listed in the table below, the normal weight concrete must have obtained the minimum concrete strength shown, prior to initial load application.

Swift Lift Anchor Ton x Length	Safe Working Load	Minimum Concrete Strength	Minimum Edge Distance
1 ton x 2-5/8"	1,700 lbs.	3,500 psi	8"
1 ton x 3-3/8"	**2,000 lbs.**	**2,200 psi**	**10"**
1 ton x 4-3/8"	2,000 lbs.	1,600 psi	10"
1 ton x 8"	**2,000 lbs.**	**1,600 psi**	**10"**
1 ton x 9-1/2"	2,000 lbs.	1,600 psi	10"
2 ton x 2-3/4"	**2,100 lbs.**	**3,500 psi**	**8"**
2 ton x 3-3/8"	2,900 lbs.	3,500 psi	10"
2 ton x 5-1/2"	**4,000 lbs.**	**1,600 psi**	**13"**
2 ton x 6"	4,000 lbs.	1,600 psi	13"
2 ton x 6-3/4"	**4,000 lbs.**	**1,600 psi**	**13"**
2 ton x 11"	4,000 lbs.	1,600 psi	14"
4 ton x 3-3/4"	**4,000 lbs.**	**3,500 psi**	**12"**
4 ton x 4-1/4"	4,900 lbs.	3,500 psi	13"
4 ton x 4-3/4"	**5,800 lbs.**	**3,500 psi**	**14"**
4 ton x 5-1/2"	7,400 lbs.	3,500 psi	17"
4 ton x 5-3/4"	**7,900 lbs.**	**3,500 psi**	**17"**
4 ton x 7-1/8"	8,000 lbs.	1,800 psi	20"
4 ton x 9-1/2"	**8,000 lbs.**	**1,600 psi**	**17"**
4 ton x 14"	8,000 lbs.	1,600 psi	18"
4 ton x 19"	**8,000 lbs.**	**1,600 psi**	**20"**
8 ton x 4-3/4"	6,400 lbs.	3,500 psi	16"
8 ton x 6-3/4"	**11,200 lbs.**	**3,500 psi**	**21"**
8 ton x 10"	16,000 lbs.	3,500 psi	19"
8 ton x 13-3/8"	**16,000 lbs.**	**1,600 psi**	**23"**
8 ton x 26-3/4"	16,000 lbs.	1,600 psi	27"
20 ton x 10"	**25,000 lbs.**	**3,500 psi**	**24"**
20 ton x 19-3/4"	40,000 lbs.	3,500 psi	31"

Safe Working Loads provide a factor of safety of approximately 4 to1 in normal weight concrete. Safe Working Load is based on anchor setback from face of concrete "X" dimension, as shown on page 26.

PO Box 508
Barton, VT 05822
Phone: (802)525-9506
Fax: (802)525-4616
www.jpsicard.com

Submittal Data Sheet

Submittal #: 16

Submission #: 1

Date: 3/10/17

Project Name: St. Johnsbury BF 7000 (20)

Owner: State of Vermont Agency of Transportation

Division:

Contractor: J.P. Sicard Inc.

Item Number: 525.45

Supplier: Harris Rebar

Description of Item: Concrete Collar - Reinforcing Steel

Subsitution: NO

Engineers Review Comments:

Vermont Agency of Transportation
RECEIVED
CK'D BY CLD OK'D BY WBP
March 10, 2017
RESUBMIT NO Approved
BY WPELLETIER DATE 03/15/2017

Submitted By: Pat Uhsmann
Title: Project Manager
Company: JP Sicard Inc

Please note that these shops are approved for the collar/collar-cap combo detailed in the Contract plans. There is no additional rebar for the "custom dimensioned MSE panel" that will be cast with the south collar.

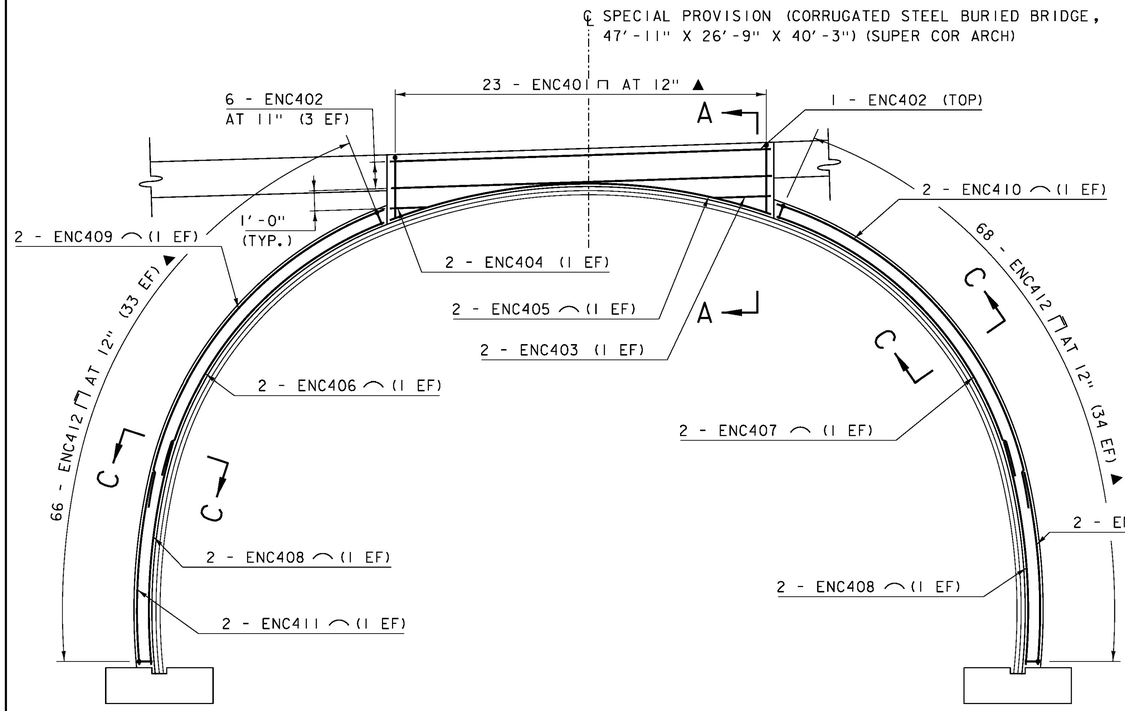

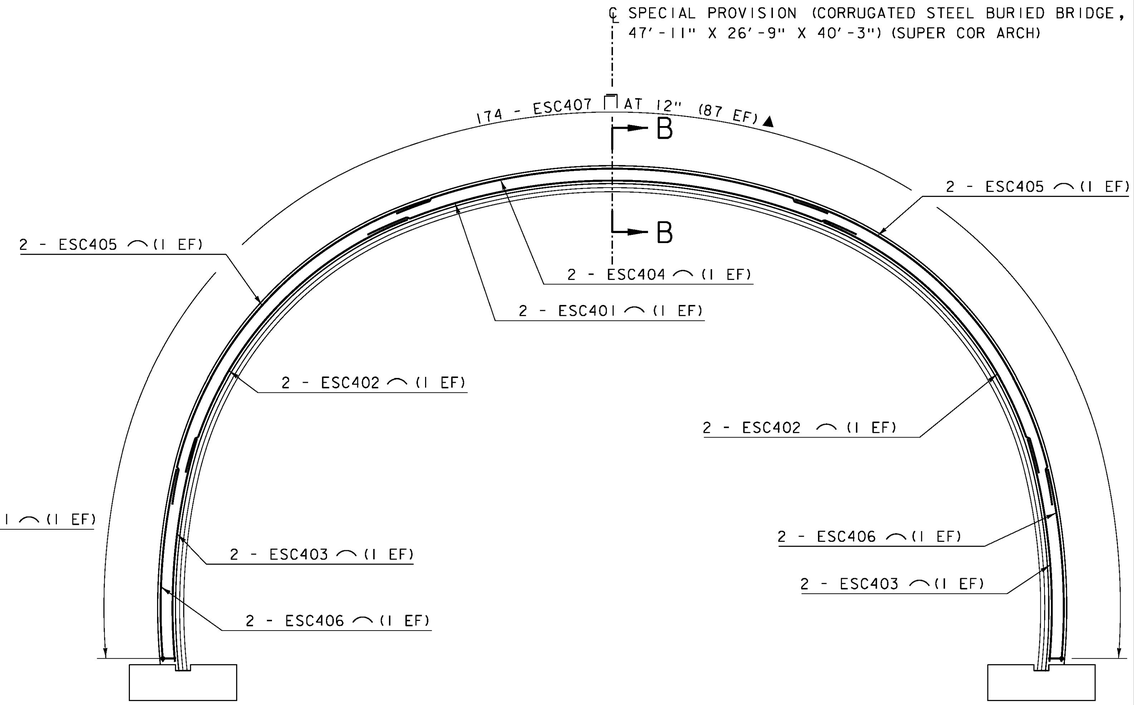

NORTH CAST-IN-PLACE CONCRETE COLLAR AND COLLAR/WALL CAP COMBINATION REINFORCING ELEVATION

SCALE: 1/4" = 1'-0"

SOUTH CAST-IN-PLACE CONCRETE COLLAR REINFORCING ELEVATION

SCALE: 1/4" = 1'-0"

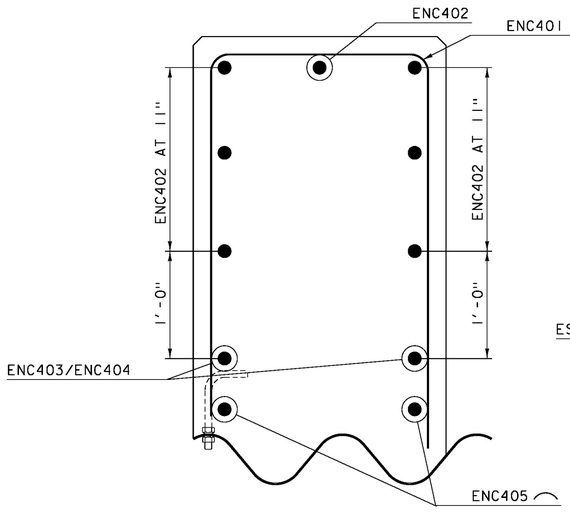

SECTION A-A

SCALE: 1 1/2" = 1'-0"

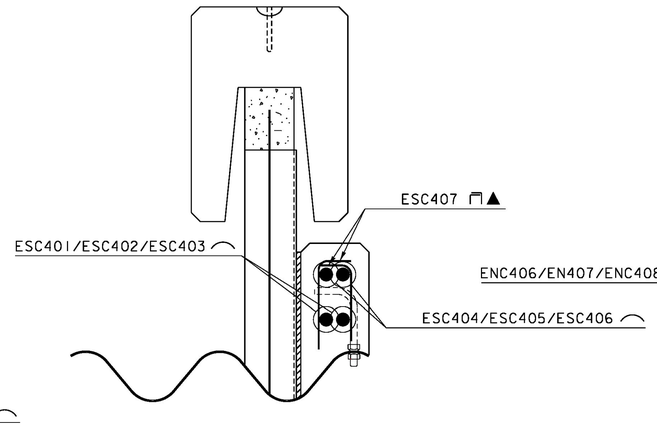

SECTION B-B

SCALE: 1 1/2" = 1'-0"

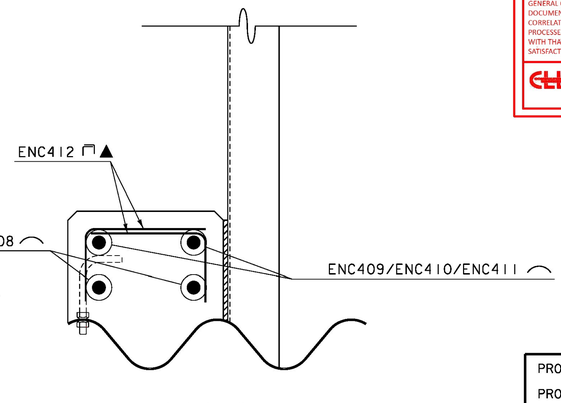

SECTION C-C

SCALE: 1 1/2" = 1'-0"

Vermont Agency of Transportation
RECEIVED
CK'D BY CLD OK'D BY WBP
March 10, 2017
RESUBMIT NO Approved
BY WPELLETIER DATE 03/15/2017

SHOP DRAWING REVIEW

☒ REVIEWED AS REQUIRED BY THE CONSTRUCTION CONTRACT DOCUMENTS AND APPROVED, BUT ONLY FOR CONFORMANCE TO THE DESIGN CONCEPT OF THE WORK, AND SUBJECT TO FURTHER LIMITATIONS AND REQUIREMENTS CONTAINED IN THE CONSTRUCTION CONTRACT DOCUMENTS.

☐ REJECTED ☐ REVISE AND RESUBMIT ☐ APPROVED AS NOTED

CORRECTIONS OR COMMENTS MADE ON THE SHOP DRAWINGS DURING THIS REVIEW DID NOT RELIEVE CONTRACTOR FROM COMPLIANCE WITH REQUIREMENTS OF THE DRAWINGS AND SPECIFICATIONS. THIS CHECK IS ONLY FOR REVIEW OF GENERAL CONFORMANCE WITH THE DESIGN CONCEPT OF THE PROJECT AND GENERAL COMPLIANCE WITH THE INFORMATION GIVEN IN THE CONTRACT DOCUMENTS. THE CONTRACTOR IS RESPONSIBLE FOR: CONFIRMING AND CORRELATING ALL QUANTITIES AND DIMENSIONS; SELECTING FABRICATION PROCESSES AND TECHNIQUES OF CONSTRUCTION; COORDINATING THEIR WORK WITH THAT OF ALL OTHER TRADES; AND PERFORMING THEIR WORK IN A SAFE AND SATISFACTORY MANNER.

CLD Consulting Engineers
540 Commercial Street
Manchester, NH 03101
603-668-8223

Job Number: 14-0116
Reviewed by: A.GIRALDI
Date: 3/15/17

NOTES:
NF = NEAR FACE
FF = FAR FACE
EF = EACH FACE
2" CLEAR, UNLESS OTHERWISE SPECIFIED ON THE THE PLANS.
1'-11" BAR LAP UNLESS OTHERWISE SPECIFIED ON THE PLANS

PROJECT NAME: ST. JOHNSBURY
PROJECT NUMBER: BF 7000(20)

FILE NAME: 86e048/cos/z86e048sub.dgn
PROJECT LEADER: J.BYATT
DESIGNED BY: S.BEAUMONT
STRUCTURE DETAILS SHEET 3

PLOT DATE: 10/26/2016
DRAWN BY: M.SMITH
CHECKED BY: A.GIRALDI
SHEET 37 OF 70

CLD 14-0116 MODEL: SUB08

STATE OF VERMONT
AGENCY OF TRANSPORTATION

REINFORCING STEEL SCHEDULE

ITEM	EACH	SIZE	LENGTH	MARK	TYPE	A	B	C	D	E	F	G	H	J	K	R	O
	SOUTH COLLAR																
	2	4	28'- 2"	ESC401	9		28'- 2"						3'- 2"			31'- 2"	27'- 3"
	4	4	19'- 1"	ESC402	9		19'- 1"						2'- 3"			20'- 0"	18'- 4"
	4	4	12'- 7"	ESC403	9		12'- 7"						0'- 7"			33'- 5"	12'- 6"
✳	3	4	24'- 10"	ESC404	9		24'- 10"						2'- 5"			31'- 10"	24'- 2"
	4	4	23'- 7"	ESC405	9		23'- 7"						3'- 3"			20'- 8"	22'- 4"
	4	4	10'- 10"	ESC406	9		10'- 10"						0'- 5"			34'- 1"	10'- 9"
✳ ▲	175	4	1'- 9"	ESC407	17		0'- 8"	1'- 1"	0'- 0"								
	NORTH COLLAR																
▲	23	4	9'- 8"	ENC401	17		3'- 10"	2'- 0"	3'- 10"								
✳	8	4	21'- 3"	ENC402	STR	21'- 3"											
	2	4	3'- 2"	ENC403	STR	3'- 2"											
	2	4	2'- 1"	ENC404	STR	2'- 1"											
	2	4	21'- 8"	ENC405	9		21'- 8"						1'- 10"			31'- 2"	21'- 3"
	2	4	19'- 6"	ENC406	9		19'- 6"						2'- 4"			20'- 0"	18'- 9"
	2	4	20'- 6"	ENC407	9		20'- 6"						2'- 7"			20'- 0"	19'- 7"
	4	4	12'- 7"	ENC408	9		12'- 7"						0'- 7"			33'- 5"	12'- 6"
	2	4	22'- 4"	ENC409	9		22'- 4"						2'- 11"			20'- 8"	21'- 3"
	2	4	23'- 4"	ENC410	9		23'- 4"						3'- 3"			20'- 8"	22'- 1"
	4	4	10'- 10"	ENC411	9		10'- 10"						0'- 5"			34'- 1"	10'- 9"
✳ ▲	135	4	1'- 8"	ENC412	17		0'- 8"	1'- 0"	0'- 0"								

~ NOTES ~

1. UNLESS OTHERWISE DESIGNATED, ALL BAR REINFORCEMENT FOR CONCRETE IN SIZES UP TO AND INCLUDING NO. 18 SHALL CONFORM TO THE REQUIREMENTS OF THE "SPECIFICATIONS FOR DEFORMED BILLET-STEEL BARS FOR CONCRETE REINFORCEMENT", AASHTO M 31 (ASTM A 615-SI). ALL BARS SHALL BE GRADE 60, UNLESS OTHERWISE DESIGNATED.
2. FOR TYPICAL BENDING DETAILS, RECOMMENDED PIN DIAMETER "D" OF BENDS AND HOOKS, AND OTHER STANDARD PRACTICE, SEE CURRENT CONCRETE REINFORCING STEEL INSTITUTE "MANUAL OF STANDARD PRACTICE".
3. BARS WHICH REQUIRE MORE ACCURATE BENDING THAN STANDARD PRACTICES SHOULD HAVE LIMITS INDICATED.
4. ALL DIMENSIONS ARE OUT TO OUT OF BAR EXCEPT "A" AND "G" ON STANDARD 180 DEGREE AND 135 DEGREE HOOKS.
5. "J" DIMENSION ON 180 DEGREE HOOKS TO BE SHOWN ONLY WHERE NECESSARY TO RESTRICT HOOK SIZE. OTHERWISE, STANDARD HOOKS ARE TO BE USED.
6. "H" DIMENSION ON STIRRUPS TO BE SHOWN ONLY WHEN NECESSARY TO MAINTAIN CLEARANCES.
7. WHERE SLOPE DIFFERS FROM 45 DEGREES, DIMENSIONS "H" AND "K" MUST BE SHOWN.
8. ▲ DENOTES BARS TO BE CUT IN FIELD.
9. ✳ DENOTES ONE EXTRA BAR ADDED FOR TESTING PURPOSES.
10. △ DENOTES TWO EXTRA BARS ADDED FOR TESTING PURPOSES.
11. E IN BAR MARK PREFIX DENOTES EPOXY COATED REINFORCING STEEL.

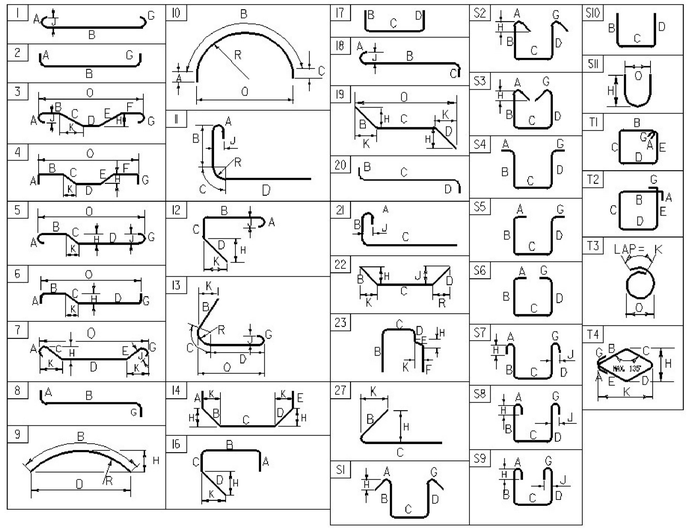

ASTM STANDARD REINFORCING BARS

BAR SIZE DESIGNATION	WEIGHT POUNDS PER FOOT	NOMINAL DIMENSIONS ROUND SECTION		
		DIAMETER INCHES	AREA INCHES^2	PERIMETER INCHES
#3	0.376	0.375	0.11	1.178
#4	0.668	0.500	0.20	1.571
#5	1.043	0.625	0.31	1.963
#6	1.502	0.750	0.44	2.356
#7	2.044	0.875	0.60	2.749
#8	2.670	1.000	0.79	3.142
#9	3.400	1.128	1.00	3.544
#10	4.303	1.270	1.27	3.990
#11	5.313	1.410	1.56	4.430
#14	7.65	1.693	2.25	5.32
#18	13.60	2.257	4.00	7.09

Vermont Agency of Transportation
RECEIVED
CK'D BY CLD OK'D BY WBP
March 10, 2017
RESUBMIT NO Approved
BY WPELLETIER DATE 03/15/2017

SHOP DRAWING REVIEW

[X] REVIEWED AS REQUIRED BY THE CONSTRUCTION CONTRACT DOCUMENTS AND APPROVED, BUT ONLY FOR CONFORMANCE TO THE DESIGN CONCEPT OF THE WORK, AND SUBJECT TO FURTHER LIMITATIONS AND REQUIREMENTS CONTAINED IN THE CONSTRUCTION CONTRACT DOCUMENTS.

[ ] REJECTED [ ] REVISE AND RESUBMIT [ ] APPROVED AS NOTED

CORRECTIONS OR COMMENTS MADE ON THE SHOP DRAWINGS DURING THIS REVIEW DID NOT RELIEVE CONTRACTOR FROM COMPLIANCE WITH REQUIREMENTS OF THE DRAWINGS AND SPECIFICATIONS. THIS CHECK IS ONLY FOR REVIEW OF GENERAL CONFORMANCE WITH THE DESIGN CONCEPT OF THE PROJECT AND GENERAL COMPLIANCE WITH THE INFORMATION GIVEN IN THE CONTRACT DOCUMENTS. THE CONTRACTOR IS RESPONSIBLE FOR: CONFIRMING AND CORRELATING ALL QUANTITIES AND DIMENSIONS; SELECTING FABRICATION PROCESSES AND TECHNIQUES OF CONSTRUCTION; COORDINATING THEIR WORK WITH THAT OF ALL OTHER TRADES; AND PERFORMING THEIR WORK IN A SAFE AND SATISFACTORY MANNER.

CLD Consulting Engineers
540 Commercial Street
Manchester, NH 03101
603-668-8223

Job Number: 14-0116
Reviewed by: A. GIRALDI
Date: 3/15/17

PROJECT NAME: ST. JOHNSBURY
PROJECT NUMBER: BF 7000(20)

FILE NAME: 86e048/cos/z86e048schedule.dgn PLOT DATE: 10/26/2016
PROJECT LEADER: J. BYATT DRAWN BY: M. SMITH
DESIGNED BY: A. GIRALDI CHECKED BY: S. BEAUMONT
REINFORCING STEEL SCHEDULE SHEET 52 OF 70

CLD 14-0116 MODEL: Schedule

PO Box 508
Barton, VT 05822
Phone: (802)525-9506
Fax: (802)525-4616
www.jpsicard.com

Vermont Agency of Transportation
RECEIVED
CK'D BY CLD OK'D BY WBP
April 6, 2017
RESUBMIT nO Approved
BY WPELLETIER DATE 04/07/2017

Submittal Data Sheet

Submittal #: 5

Submission #: 4

Date: 4/6/17

Project Name: St. Johnsbury BF 7000 (20)

Owner: State of Vermont Agency of Transportation

Division:

Contractor: J.P. Sicard Inc.

Item Number: 540.10

Supplier: Old Castle Precast Inc.

Description of Item: Precast Concrete Structure (Wall Cap)

Subsitution: NO

Engineers Review Comments:

RECEIVED
By Wendy Pelletier, PE at 12:52 pm, Apr 06, 2017

Submitted By: Pat Uhsmann
Title: Project Manager
Company: JP Sicard Inc

SHOP DRAWING REVIEW

[X] REVIEWED AS REQUIRED BY THE CONSTRUCTION CONTRACT DOCUMENTS AND APPROVED, BUT ONLY FOR CONFORMANCE TO THE DESIGN CONCEPT OF THE WORK, AND SUBJECT TO FURTHER LIMITATIONS AND REQUIREMENTS CONTAINED IN THE CONSTRUCTION CONTRACT DOCUMENTS.

[ ] REJECTED [ ] REVISE AND RESUBMIT [ ] APPROVED AS NOTED

CORRECTIONS OR COMMENTS MADE ON THE SHOP DRAWINGS DURING THIS REVIEW DID NOT RELIEVE CONTRACTOR FROM COMPLIANCEWITH REQUIREMENTS OF THE DRAWINGS AND SPECIFICATIONS. THIS CHECK IS ONLY FOR REVIEW OF GENERAL CONFORMANCE WITH THE DESIGN CONCEPT OF THE PROJECT AND GENERAL COMPLIANCE WITH THE INFORMATION GIVEN IN THE CONTRACT DOCUMENTS. THE CONTRACTOR IS RESPOINSIBLE FOR: CONFIRMING AND CORRELATING ALL QUANTITIES AND DIMENSIONS; SELECTING FABRICATION PROCESSES AND TECHNIQUES OF CONSTRUCTION; COORDINATING THEIR WORK WITH THAT OF ALL OTHER TRADES; AND PERFORMING THEIR WORK IN A SAFE AND SATISFACTORY MANNER.

CLD Consulting Engineers
540 Commercial Street
Manchester, NH 03101
603-668-8223

Job Number: 14-0116
Reviewed by: A. GIRALDI
Date: 4/7/17

MANUFACTURED BY:

Oldcastle™ Precast, Inc.

41 ALMEIDA ROAD REHOBOTH, MA 02769
(508) 336-7600 FAX (508) 336-7707

PROJECT:
STATE OF VERMONT
AGENCY OF TRANSPORTATION
VERMONT ROUTE 2B (URBAN MINOR ARTERIAL) BRIDGE NO. 6
PROJECT NO. BF 7000(20) - ST. JOHNSBURY
PRECAST COPING WALLS
ST. JOHNSBURY, VT

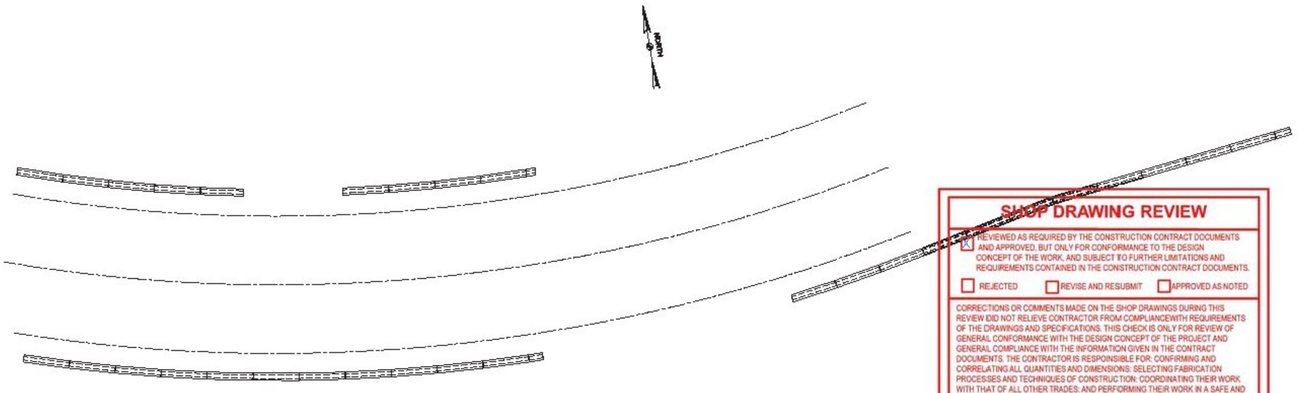

Vermont Agency of Transportation
RECEIVED
CK'D BY CLD OK'D BY WBP
April 6, 2017
RESUBMIT no Approved
BY WPELLETIER DATE 04/07/2017

SHOP DRAWING REVIEW

[X] REVIEWED AS REQUIRED BY THE CONSTRUCTION CONTRACT DOCUMENTS AND APPROVED, BUT ONLY FOR CONFORMANCE TO THE DESIGN CONCEPT OF THE WORK, AND SUBJECT TO FURTHER LIMITATIONS AND REQUIREMENTS CONTAINED IN THE CONSTRUCTION CONTRACT DOCUMENTS.

[ ] REJECTED [ ] REVISE AND RESUBMIT [ ] APPROVED AS NOTED

CORRECTIONS OR COMMENTS MADE ON THE SHOP DRAWINGS DURING THIS REVIEW DID NOT RELIEVE CONTRACTOR FROM COMPLIANCEWITH REQUIREMENTS OF THE DRAWINGS AND SPECIFICATIONS. THIS CHECK IS ONLY FOR REVIEW OF GENERAL CONFORMANCE WITH THE DESIGN CONCEPT OF THE PROJECT AND GENERAL COMPLIANCE WITH THE INFORMATION GIVEN IN THE CONTRACT DOCUMENTS. THE CONTRACTOR IS RESPONSIBLE FOR: CONFIRMING AND CORRELATING ALL QUANTITIES AND DIMENSIONS; SELECTING FABRICATION PROCESSES AND TECHNIQUES OF CONSTRUCTION; COORDINATING THEIR WORK WITH THAT OF ALL OTHER TRADES; AND PERFORMING THEIR WORK IN A SAFE AND SATISFACTORY MANNER.

CLD Consulting Engineers
540 Commercial Street
Manchester, NH 03101
603-668-8223

Job Number: 14-0116
Reviewed by: A. GIRALDI
Date: 4/7/17

DRAWING SCHEDULE

SHEET	DESCRIPTION
1	COVER SHEET
2	REVISIONS SHEET
3	GENERAL LAYOUT
4	COPING WALL TYPE "CW-1" PIECE DETAILS
5	COPING WALL TYPE "CW-2" PIECE DETAILS
6	COPING WALL TYPE "CW-3" PIECE DETAILS
7	COPING WALL TYPE "CW-4" PIECE DETAILS
8	COPING WALL TYPE "CW-5" PIECE DETAILS
9	COPING WALL TYPE "CW-6" PIECE DETAILS

Oldcastle Precast
101 MIDLAND AVE. - RTE 12 - SOUTHBORO, MA
(508) 229-7500 FAX (508) 229-7599

THE INFORMATION ON THIS DRAWING IS PROPRIETARY AND CONFIDENTIAL AND IS THE EXCLUSIVE PROPERTY OF OLDCASTLE PRECAST, INC. AND IS NOT TO BE USED IN ANY MANNER WITHOUT THE WRITTEN PERMISSION OF OLDCASTLE PRECAST, INC.

COPYRIGHT © 2017 OLDCASTLE PRECAST, INC. ALL RIGHTS RESERVED.

STATE OF VERMONT; AGENCY OF TRANSPORTATION
ST. JOHNSBURY, VT
VERMONT ROUTE 2B (URBAN MINOR ARTERIAL)

COVER SHEET

DRAWING NO. 0 REV. ---
CONTRACT NO. BF 7000(20)
PCE JOB/MILL NO. ---
DESIGNED J.D. ELVIO

DATE	DRAWN	CHECKED	SCALE	JOB/MILL NO.
3/28/17	A.Z.	D.B.	C.P.	47382164

DRAWING NUMBER: 124-BDGE194-001

REVISION NO	SHEET
00	1 OF 9
SUBMITTED APR17	

REVISIONS						
REVISION	DATE	BY	SHEET	DESCRIPTION OF REVISION	REASON FOR REVISION	REQUESTED BY
01	2/22/17	D.B.	3	ADDED LIFTING RESTRICTION AND DUNNAGE DETAILS		CUSTOMER
01	2/22/17	D.B.	4-9	ADDED CONCRETE STRENGTH FOR STRIPPING & HANDLING TO DESIGN NOTES		CUSTOMER
02	3/29/17	D.B.	3	ADDED PIECE MARKS		CUSTOMER
02	3/29/17	D.B.	4-9	ADDED CHAMFERS TO BOTTOM LONG EDGES		CUSTOMER
02	3/29/17	D.B.	4	REVISED QUANTITY & ADJUSTED ITEM TOTALS ACCORDINGLY, ADDED NOTE AT BAR CHART FOR PROVIDING LOOSE TESTING BARS		CUSTOMER
02	3/29/17	D.B.	5,6,7,8	REVISED LENGTHS, ADJUSTED ITEM TOTALS AND WEIGHTS ACCORDINGLY		
02	3/29/17	D.B.	9	REVISED QUANTITY, ADJUSTED TOTALS ACCORDINGLY		
02	3/29/17	D.B.	4-9	ADDED "CURING PLAN SUBMITTED SEPARATELY" TO ALL DESIGN NOTES		CUSTOMER
02	3/29/17	D.B.	7	ADDED 2ND LONGITUDINAL DIMENSION IN PLAN, CORRECTED BAR CALLOUTS IN SECTION D-D		CUSTOMER
02	3/29/17	D.B.	8	CORRECTED PIECE HIGHLIGHT IN LEGEND		CUSTOMER
02	3/29/17	D.B.	8	REVISED LENGTH OF PIECE AND ADJUSTED REINFORCING ACCORDINGLY		CUSTOMER
03	3/31/17	D.B.	1,4,10	REVISED THE LENGTH OF (1) 'CW-1' TO MAKE NEW PIECE 'CW-7' AND UPDATED DRAWING SCHEDULE ACCORDINGLY	TOTAL LENGTH OF PIECES IN WEST SIDE OF NORTH RETAINING WALL WAS TOO LONG	CUSTOMER
03	3/31/17	D.B.	5,8,8	CORRECTED QUANTITY OF LATERAL BAR SPACES IN REINFORCING VIEWS		CUSTOMER
04	4/4/17	D.B.	3,4	REMOVED PIECE TYPE 'CW-7' AND REPLACED IT WITH 'CW-1' IN NORTHWEST SECTION OF NORTH RETAINING WALL	TO ALLOW 8" OF OVERHANG AMOUNT PAST WORK POINT 4	CUSTOMER

SHOP DRAWING REVIEW

☒ REVIEWED AS REQUIRED BY THE CONSTRUCTION CONTRACT DOCUMENTS AND APPROVED, BUT ONLY FOR CONFORMANCE TO THE DESIGN CONCEPT OF THE WORK, AND SUBJECT TO FURTHER LIMITATIONS AND REQUIREMENTS CONTAINED IN THE CONSTRUCTION CONTRACT DOCUMENTS.

☐ REJECTED ☐ REVISE AND RESUBMIT ☐ APPROVED AS NOTED

CORRECTIONS OR COMMENTS MADE ON THE SHOP DRAWINGS DURING THIS REVIEW DID NOT RELIEVE CONTRACTOR FROM COMPLIANCEWITH REQUIREMENTS OF THE DRAWINGS AND SPECIFICATIONS. THIS CHECK IS ONLY FOR REVIEW OF GENERAL CONFORMANCE WITH THE DESIGN CONCEPT OF THE PROJECT AND GENERAL COMPLIANCE WITH THE INFORMATION GIVEN IN THE CONTRACT DOCUMENTS. THE CONTRACTOR IS RESPONSIBLE FOR: CONFIRMING AND CORRELATING ALL QUANTITIES AND DIMENSIONS; SELECTING FABRICATION PROCESSES AND TECHNIQUES OF CONSTRUCTION; COORDINATING THEIR WORK WITH THAT OF ALL OTHER TRADES; AND PERFORMING THEIR WORK IN A SAFE AND SATISFACTORY MANNER.

CLD Consulting Engineers
540 Commercial Street
Manchester, NH 03101
603-668-8223

Job Number: 14-0116
Reviewed by: A. GIRALDI
Date: 4/7/17

Vermont Agency of Transportation
RECEIVED
CK'D BY CLD OK'D BY WBP
April 6, 2017
RESUBMIT nO Approved
BY WPELLETIER DATE 04/07/2017

Oldcastle Precast
[illegible]

THIS DRAWING IS THE PROPERTY OF OLDCASTLE PRECAST, INC. IT IS CONFIDENTIAL AND NOT TO BE COPIED, USED, OR DISCLOSED IN ANY WAY EXCEPT AS EXPRESSLY AUTHORIZED IN WRITING BY AN OFFICER OF OLDCASTLE PRECAST, INC.

COPYRIGHT © 2017 OLDCASTLE PRECAST, INC. ALL RIGHTS RESERVED.

STATE OF VERMONT/ AGENCY OF TRANSPORTATION
ST. JOHNSBURY, VT
VERMONT ROUTE 2B (BRIDGE SERIES #VTR1944)

REVISIONS SHEET
ORDER NO. 4 QTY. ——
COMMISSION NO. SF 7004(033)
FIELD MODEL NO. ——
CUSTOMER I.D. SCALE:

DATE	DRAWN	DESIGNED	CHECKED	DRAWING NO.
1/20/17	A.B.	D.B.	C.F.	BCB0F04

SHEET NO. 2 OF 6

3241-BCB0F-04-024

Please see attached e-mail from BiG R speaking to the length of coping vs the length of wall

NORTH WALL

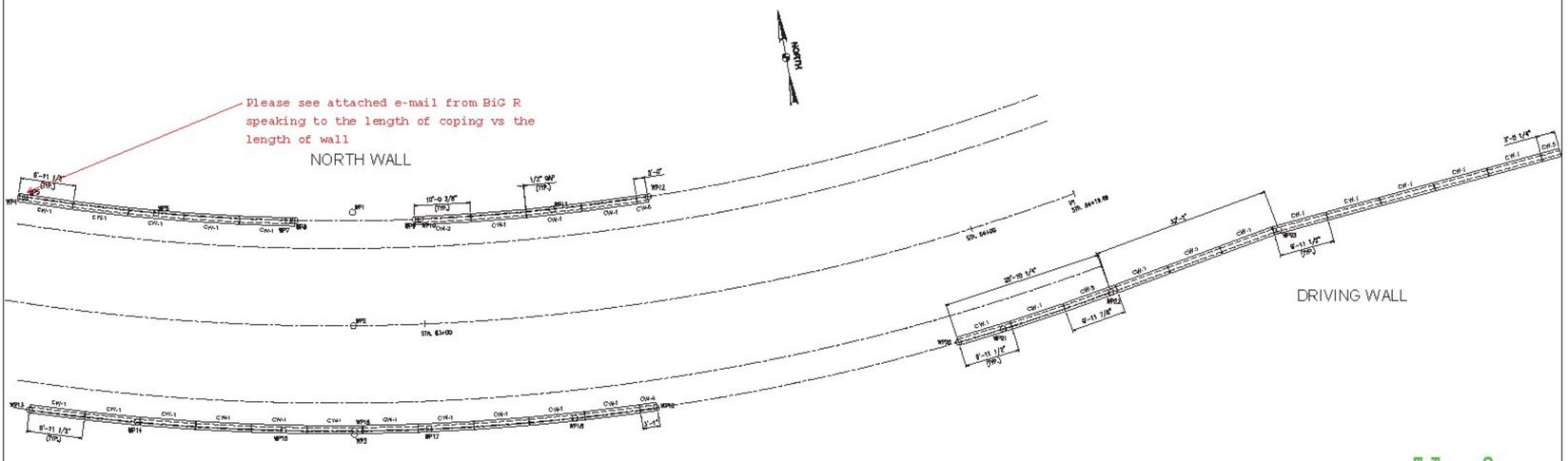

GENERAL LAYOUT
SCALE: NTS



LIFTING RESTRICTIONS
NTS

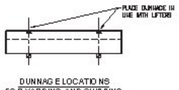

DUNNAGE LOCATIONS FOR YARDING AND SHIPPING
(CUT-OUTS SLIGHTLY TO TWO SIDES)
NTS

Vermont Agency of Transportation
RECEIVED
CK'D BY CLD OK'D BY WBP
April 6, 2017
RESUBMIT no
Approved
BY WPELLETIER
DATE 04/07/2017

SHOP DRAWING REVIEW

[X] REVIEWED AS REQUIRED BY THE CONSTRUCTION CONTRACT DOCUMENTS AND APPROVED, BUT ONLY FOR CONFORMANCE TO THE DESIGN CONCEPT OF THE WORK, AND SUBJECT TO FURTHER LIMITATIONS AND REQUIREMENTS CONTAINED IN THE CONSTRUCTION CONTRACT DOCUMENTS.

[ ] REJECTED [ ] REVISE AND RESUBMIT [ ] APPROVED AS NOTED

CORRECTIONS OR COMMENTS MADE ON THE SHOP DRAWINGS DURING THIS REVIEW DID NOT RELIEVE CONTRACTOR FROM COMPLIANCE WITH REQUIREMENTS OF THE DRAWINGS AND SPECIFICATIONS. THIS CHECK IS ONLY FOR REVIEW OF GENERAL CONFORMANCE WITH THE DESIGN CONCEPT OF THE PROJECT AND GENERAL COMPLIANCE WITH THE INFORMATION GIVEN IN THE CONTRACT DOCUMENTS. THE CONTRACTOR IS RESPONSIBLE FOR: CONFIRMING AND CORRELATING ALL QUANTITIES AND DIMENSIONS; SELECTING FABRICATION PROCESSES AND TECHNIQUES OF CONSTRUCTION; COORDINATING THEIR WORK WITH THAT OF ALL OTHER TRADES; AND PERFORMING THEIR WORK IN A SAFE AND SATISFACTORY MANNER.

CLD Consulting Engineers
540 Commercial Street
Manchester, NH 03101
603-668-8223

Job Number: 14-0116
Reviewed by: A. GIRALDI
Date: 4/7/17

Oldcastle Precast
101 MAGEE AVE. ROCHESTER, NY
(585) 328-7800 FAX (585) 328-7797

THE INFORMATION ON THIS DRAWING IS PROPRIETARY AND CONFIDENTIAL IN NATURE AND IS THE EXCLUSIVE PROPERTY OF OLDCASTLE PRECAST, INC. ("OLDCASTLE"). IT IS LOANED SUBJECT TO THE AGREEMENT THAT NO PART OF IT IN ANY FORM SHALL BE DISCLOSED, REPRODUCED, PHOTOGRAPHED, COPIED OR USED IN ANY MANNER WHATSOEVER WITHOUT THE EXPRESS WRITTEN PERMISSION OF OLDCASTLE PRECAST, INC. AND IT IS NOT TO BE LOANED, COPIED OR SHOWN TO ANYONE OUTSIDE THE RECIPIENT'S ORGANIZATION EXCEPT AS NECESSARY FOR BIDDING OR MANUFACTURING PURPOSES.

COPYRIGHT © 2017 OLDCASTLE PRECAST, INC. ALL RIGHTS RESERVED.

STATE OF VERMONT; AGENCY OF TRANSPORTATION
ST. JOHNSBURY, VT
VERMONT ROUTE 5B (LYNDON MANOR APARTMENTS)

GENERAL LAYOUT

DRAWING NO. 5
CONTRACT NO. SF 7000(124)
PCE JOB/MILL NO. ____
DESIGNED J.D. SILVIO

DATE	DRAWN	CHECKED	APPROVED	DRAWING NO.
3/28/17	A.E.	D.B.	C.A.	4538154

DRAWING FILENAME: 324-BDB194-001

SHEET NO. 3 OF 8
PROJECT QTY 1

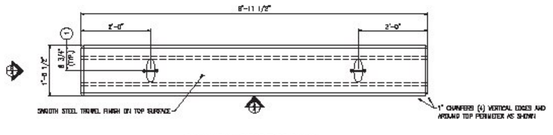

PLAN VIEW - PIECE TYPE 'CW-1'
SCALE 3/4"=1'-0"

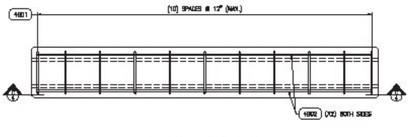

REINFORCING PLAN VIEW
SCALE 3/4"=1'-0"

BENT BAR LOCATIONS SHOWN REPRESENT BAR LOCATIONS BEFORE BENDING AND ACCOUNT FOR RADIUS AND STRETCHING DURING BENDING. BAR LOCATIONS POLARIZED DRAWN TO NEAREST 1/4".

BAR CHART (EPOXY COATED)

	ITEM	QTY/PC	TOTAL	SIZE	TYPE	LOCATION	AVG
	4001	11	319	#5	17	4'-4"	5155.600
*	4003	4	114	#4	STR.	9'-2 1/2"	2626.650

* PREPARE EXTRA LOOSE BARS TO AGENCY OF TRANSPORTATION FOR TESTING AS NEED.

MAINTAIN 2" MIN. CLEARANCE FROM ALL EXTERIOR SURFACES UNLESS NOTED OTHERWISE.

BILL OF MATERIALS

ITEM	QTY/PC	TOTAL	DESCRIPTION	AVG
1	2	58	M3 M31/A615 V-ANCHOR, GALV.	A300543
2	0.33 CY	21.17 CY	NEWMIX AIRFENCE CONCRETE MIX 3F (VOLUMETRIC MIX 2M) OR NEWMIX AIRFENCE CONCRETE MIX 5H (VOLUMETRIC MIX 5M)	5003545 OR 5003546

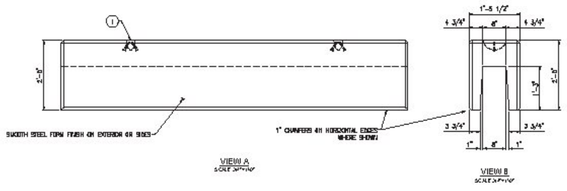

VIEW A
SCALE 3/4"=1'-0"

VIEW B
SCALE 3/4"=1'-0"

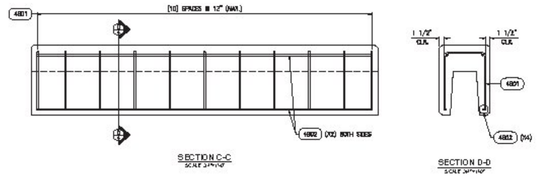

SECTION C-C
SCALE 3/4"=1'-0"

SECTION D-D
SCALE 3/4"=1'-0"

Vermont Agency of Transportation
RECEIVED
CK'D BY CLD
OK'D BY WBP
April 6, 2017
RESUBMIT NO
BY WPELLETIER
Approved
DATE 04/07/2017

DESIGN NOTES

CONCRETE MINIMUM STRENGTH = 5,000 PSI @ 28 DAYS.
2,000 PSI REQUIRED FOR STRIPPING AND HANDLING.
1. STEEL REINFORCEMENT: NOMINAL ASTM A615 GRADE 60, EPOXY COATED
2. COVER TO STEEL = 2" MIN. UNLESS NOTED OTHERWISE
3. ALL SURFACES TO RECEIVE SMOOTH FORM OR TROWEL FINISH

APPROX WT CW-1 = 1.48 TONS
(28) PIECES REQ'D.

INSPECTION TO BE PERFORMED BY VTRANS INSPECTOR OR THEIR DESIGNATED REPRESENTATIVE

CURVED PLAN SUBMITTED SEPARATELY

BAR WEIGHT TOTALS

#4 BARS	1,569.25 LBS.
#5 BARS	5,155.60 LBS.

SHOP DRAWING REVIEW

[X] REVIEWED AS REQUIRED BY THE CONSTRUCTION CONTRACT DOCUMENTS AND APPROVED, BUT ONLY FOR CONFORMANCE TO THE DESIGN CONCEPT OF THE WORK, AND SUBJECT TO FURTHER LIMITATIONS AND REQUIREMENTS CONTAINED IN THE CONSTRUCTION CONTRACT DOCUMENTS.

[ ] REJECTED [ ] REVISE AND RESUBMIT [ ] APPROVED AS NOTED

CORRECTIONS OR COMMENTS MADE ON THE SHOP DRAWINGS DURING THIS REVIEW DID NOT RELIEVE CONTRACTOR FROM COMPLIANCEWITH REQUIREMENTS OF THE DRAWINGS AND SPECIFICATIONS. THIS CHECK IS ONLY FOR REVIEW OF GENERAL CONFORMANCE WITH THE DESIGN CONCEPT OF THE PROJECT AND GENERAL COMPLIANCE WITH THE INFORMATION GIVEN IN THE CONTRACT DOCUMENTS. THE CONTRACTOR IS RESPOINSIBLE FOR: CONFIRMING AND CORRELATING ALL QUANTITIES AND DIMENSIONS; SELECTING FABRICATION PROCESSES AND TECHNIQUES OF CONSTRUCTION; COORDINATING THEIR WORK WITH THAT OF ALL OTHER TRADES; AND PERFORMING THEIR WORK IN A SAFE AND SATISFACTORY MANNER.

CLD Consulting Engineers
540 Commercial Street
Manchester, NH 03101
603-668-8223

Job Number: 14-0116
Reviewed by: A. GIRALDI
Date: 4/7/17

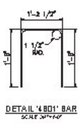

DETAIL '4B01' BAR
SCALE 3/4"=1'-0"



LEGEND
NOT TO SCALE

CW-1
(28) REQ'D.

Oldcastle Precast
101 PRIDE - 400, P. - BURRILLVILLE, RI
(508) 539-7000 FAX (508) 539-7117

THIS DRAWING IS THE EXPRESS PROPERTY OF OLDCASTLE PRECAST, INC. IT IS SUBMITTED ALMOST EXCLUSIVELY FOR USE IN CONNECTION WITH THE PROJECT AND SHALL NOT BE LOANED OR COPIED, NOR SHALL ITS CONTENTS BE DISCLOSED TO ANY PERSON OR ENTITY NOT ENGAGED IN WORK TO BE PERFORMED BY OLDCASTLE PRECAST, INC.

COPYRIGHT © 2017 OLDCASTLE PRECAST, INC. ALL RIGHTS RESERVED.

STATE OF VERMONT/AGENCY OF TRANSPORTATION
ST. JOHNSBURY, VT
VERMONT ROUTE 5N (EBENEZER AVENUE)

EXPRESS WALL TYPE 'CW-1' PIECE DETAILS

ORDER NO. 1 SR. ——
COMBINATION, SF 7000(333)
PROJECT NO. ——
CUSTOMER J.D. SCOTT

DATE	DRAWN	CHECKED	DRAWING NO.
1/20/17	AJL	CJL	324-20081-04-02H

DESIGNED	SHEET
04	4 OF 11
SECT. CORP. COPY	

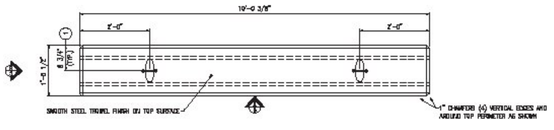

PLAN VIEW – PIECE TYPE 'CW-2
SCALE 3/4"=1'-0"

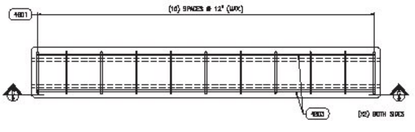

REINFORCING PLAN VIEW
SCALE 3/4"=1'-0"

BENT BAR LOCATIONS SHOWN REPRESENT BAR LOCATIONS BEFORE BENDING AND ACCOUNT FOR RADIUS AND STRETCHING DURING BENDING. BAR LOCATIONS PLOTTED DRAWN TO NEAREST 1/4"

BAR CHART (EPOXY COATED)

ITEM	QTY/PC	TOTAL	SIZE	TYPE	LOCATION	AVG
4801	11	11	#5	17	4'-4"	5155600
4803	4	4	#4	STRT.	9'-8 1/4"	5010400

MAINTAIN 2" MIN. CLEARANCE FROM ALL EXTERIOR SURFACES UNLESS NOTED OTHERWISE.

BILL OF MATERIALS

ITEM	QTY/PC	TOTAL	DESCRIPTION	AVG
1	2	2	M3 M30/45 V-HACHER, GALV.	3000643
2	0.33 CY	0.66 CY	Newport Approved Concrete mix #1 (Vicksburg mix #3) OR Newport Approved Concrete mix #1 (Vicksburg mix #3M)	5010640 OR 5010646

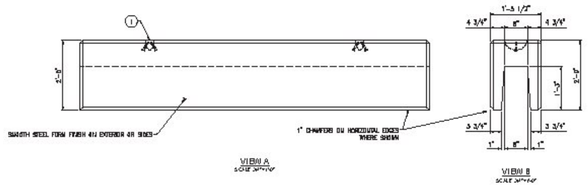

VIEW A
SCALE 3/4"=1'-0"

VIEW B
SCALE 3/4"=1'-0"

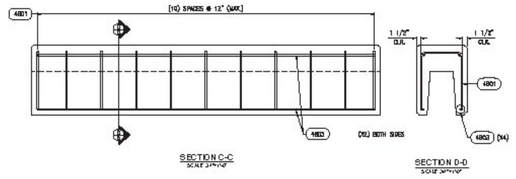

SECTION C-C
SCALE 3/4"=1'-0"

SECTION D-D
SCALE 3/4"=1'-0"

Vermont Agency of Transportation
RECEIVED
CK'D BY CLD
CK'D BY WSP
April 6, 2017
RESUBMIT no
BY MPELLETIER
Approved
DATE 04/07/2017

DESIGN NOTES

CONCRETE MINIMUM STRENGTH = 5,000 PSI @ 28 DAYS.
7,000 PSI REQUIRED FOR STRIPPING AND HANDLING
1. STEEL REINFORCEMENT: REBAR, ASTM A615 GRADE 60, EPOXY COATED
2. COVER TO STEEL = 2" MIN. UNLESS NOTED OTHERWISE
3. ALL SURFACES TO RECEIVE SMOOTH PERM OR TROWEL FINISH

APPROX WT. CW-2 = 1.48 TONS
(1) PIECE REQ'D.

INSPECTION TO BE PERFORMED BY VTRANS INSPECTOR OR THEIR DESIGNATED REPRESENTATIVE

CURVED PLAN SUBMITTED SEPARATELY

BAR WEIGHT TOTALS

#4 BARS	57.33 LBS.

SHOP DRAWING REVIEW

[X] REVIEWED AS REQUIRED BY THE CONSTRUCTION CONTRACT DOCUMENTS AND APPROVED, BUT ONLY FOR CONFORMANCE TO THE DESIGN CONCEPT OF THE WORK, AND SUBJECT TO FURTHER LIMITATIONS AND REQUIREMENTS CONTAINED IN THE CONSTRUCTION CONTRACT DOCUMENTS.

[ ] REJECTED [ ] REVISE AND RESUBMIT [ ] APPROVED AS NOTED

CORRECTIONS OR COMMENTS MADE ON THE SHOP DRAWINGS DURING THIS REVIEW DID NOT RELIEVE CONTRACTOR FROM COMPLIANCEWITH REQUIREMENTS OF THE DRAWINGS AND SPECIFICATIONS. THIS CHECK IS ONLY FOR REVIEW OF GENERAL CONFORMANCE WITH THE DESIGN CONCEPT OF THE PROJECT AND GENERAL COMPLIANCE WITH INFORMATION GIVEN IN THE CONTRACT DOCUMENTS. CONTRACTOR IS RESPONSIBLE FOR: CONFIRMING AND CORRELATING ALL QUANTITIES AND DIMENSIONS; SELECTING FABRICATION PROCESSES AND TECHNIQUES OF CONSTRUCTION; COORDINATING THEIR WORK WITH THAT OF ALL OTHER TRADES; AND PERFORMING THEIR WORK IN A SAFE AND SATISFACTORY MANNER.

CLD Consulting Engineers
540 Commercial Street
Manchester, NH 03101
603-668-8223

Job Number: 14-0116
Reviewed by: A. GIRALDI
Date: 4/7/17

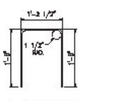

DETAIL '4801' BAR
SCALE 3/4"=1'-0"



LEGEND
NOT TO SCALE

Oldcastle Precast
101 PRIDE – 400, P. – NEWPORT, VT
(800) 339-7858 FAX (802) 334-7317

THIS DRAWING IS THE PROPERTY OF OLDCASTLE PRECAST, INC. IT IS CONFIDENTIAL AND NOT TO BE DISCLOSED TO THIRDS, NOR USED, IN WHOLE OR IN PART, WITHOUT PERMISSION IN WRITING BY THEIR FIRMS BY OLDCASTLE PRECAST, INC.

COPYRIGHT © 2017 OLDCASTLE PRECAST, INC. ALL RIGHTS RESERVED.

STATE OF VERMONT: AGENCY OF TRANSPORTATION
ST. JOHNSBURY, VT
VERMONT ROUTE 5N (DERBY BRIDGE APPROACH)

DESIGNED WALL TYPE 'CW-2' PIECE DETAILS

ENGINEERING NO. 4 SHT. —
COMMISSION NO. SF 7000(035)
PROJECT NO. —
CUSTOMER NO. SC420

DATE	DRAWN	DESIGNED	CHECKED	SALES/OFFICE
1/20/17	A.B.	D.B.	C.P.	BOSP/SA

DRAWING NUMBER: 324-BOSP/SA-024 — REVISION NO. 04 — SHEET NO. 4 OF 5

CW-2
(1) REQ'D.

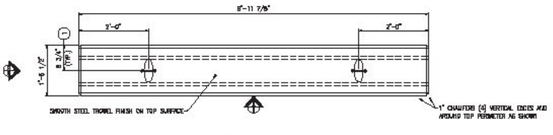

PLAN VIEW - PIECE TYPE 'CW-3'

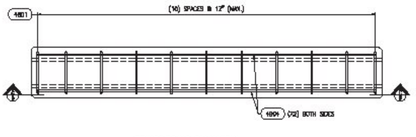

REINFORCING PLAN VIEW

EIGHT BAR LENGTHS SHOWN REPRESENT BAR LENGTHS BEFORE BENDING AND ACCOUNT FOR HOOKS AND STRETCHING DURING BENDING. BAR LENGTHS ROUNDED DOWN TO NEAREST 1/4"

BAR CHART (EPOXY COATED)

ITEM	QTY/PC	TOTAL	SIZE	TYPE	LENGTH	ADJ
4801	11	11	#4	12	4'-4"	5105400
4804	4	4	#4	STRT.	8'-7 3/4"	8102400

WARRANT 2" MIN. CLEARANCE FROM ALL EXTERIOR SURFACES UNLESS NOTED OTHERWISE.

BILL OF MATERIALS

ITEM	QTY/PC	TOTAL	DESCRIPTION	ADJ
1	2	2	MS MEV44 V-ANCHOR, GALV.	8300642
2	0.33 CY	0.73 CY	NEWCRETE APPROVED CONCRETE MIX OF INDUSTRIAL MIX (IM) OR NEWCRETE APPROVED CONCRETE MIX #1 INDUSTRIAL MIX (IM)	9400041 OR 9401041

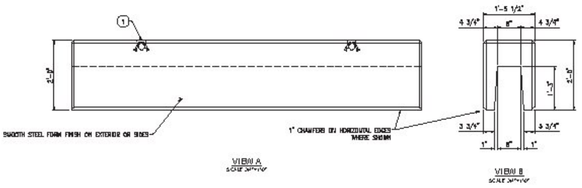

VIEW A

VIEW B

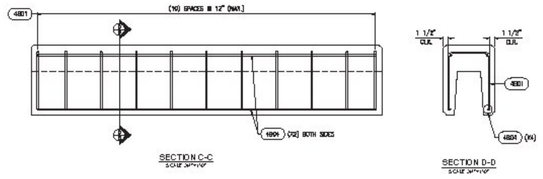

SECTION C-C

SECTION D-D

Vermont Agency of Transportation
RECEIVED
CK'D BY CLD
CK'D BY WBP
RESUBMIT NO
BY WPELLETIER
April 6, 2017
Approved
DATE 04/07/2017

DESIGN NOTES

CONCRETE MINIMUM STRENGTH = 5,000 PSI @ 28 DAYS.
7,500 PSI REQUIRED FOR STRIPPING AND HANDLING

1. STEEL REINFORCEMENT BEING ASTM A615 GRADE 60, EPOXY COATED
2. COVER TO STEEL = 2" MIN. UNLESS NOTED OTHERWISE.
3. ALL SURFACES TO RECEIVE SMOOTH FORM OR TROWEL FINISH

APPROX. WT. CW-3 = 1.47 TONS
(1) PIECE REQ'D.

INSPECTION TO BE PERFORMED BY VTRANS INSPECTOR OR THEIR DESIGNATED REPRESENTATIVE.

CURVED PLAN SUBMITTED SEPARATELY

BAR WEIGHT TOTALS

#4 BARS	52.62 LBS.

SHOP DRAWING REVIEW

☒ REVIEWED AS REQUIRED BY THE CONSTRUCTION CONTRACT DOCUMENTS AND APPROVED, BUT ONLY FOR CONFORMANCE TO THE DESIGN CONCEPT OF THE WORK, AND SUBJECT TO FURTHER LIMITATIONS AND REQUIREMENTS CONTAINED IN THE CONSTRUCTION CONTRACT DOCUMENTS.

☐ REJECTED ☐ REVISE AND RESUBMIT ☐ APPROVED AS NOTED

CORRECTIONS OR COMMENTS MADE ON THE SHOP DRAWINGS DURING THIS REVIEW DID NOT RELIEVE CONTRACTOR FROM COMPLIANCEWITH REQUIREMENTS OF THE DRAWINGS AND SPECIFICATIONS. THIS CHECK IS ONLY FOR REVIEW OF GENERAL CONFORMANCE WITH THE DESIGN CONCEPT OF THE PROJECT AND GENERAL COMPLIANCE WITH THE INFORMATION GIVEN IN THE CONTRACT DOCUMENTS. THE CONTRACTOR IS RESPONSIBLE FOR: CONFIRMING AND CORRELATING ALL QUANTITIES AND DIMENSIONS; SELECTING FABRICATION PROCESSES AND TECHNIQUES OF CONSTRUCTION; COORDINATING THEIR WORK WITH THAT OF ALL OTHER TRADES; AND PERFORMING THEIR WORK IN A SAFE AND SATISFACTORY MANNER.

CLD Consulting Engineers
560 Commercial Street
Manchester, NH 03101
603-668-8223

Job Number: 14-0116
Reviewed by: A. GIRALDI
Date: 4/7/17



DETAIL '4801' BAR

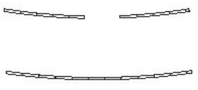

LEGEND
NOT TO SCALE

Oldcastle Precast
105 NEWAY RD. • ADD. ST. • BARRE, MA
(508) 839-7955 FAX (508) 839-7957

THE ARCHITECTURAL WORK REPRESENTED BY ALTERATIONS, PREPARED BY, OR UNDER THE DIRECTION OF, A REGISTERED ARCHITECT, IS SUBJECT TO THE PROVISIONS OF THE ARCHITECTS' REGISTRATION LAW OF THE STATE OF VERMONT. ALL REPRODUCTIONS, COPIES OR USES OF THIS ARCHITECTURAL WORK WITHOUT THE WRITTEN PERMISSION OF THE ARCHITECT, EXCEPT BY AGREEMENT WITH OR A WRITTEN RELEASE FROM THE ARCHITECT, SHALL BE UNLAWFUL AND WILL BE SUBJECT TO LEGAL PROSECUTION.

COPYRIGHT © 2017 ALDRICH PEARCE, INC. ALL RIGHTS RESERVED.

STATE OF VERMONT; AGENCY OF TRANSPORTATION
ST. JOHNSBURY, VT
VERMONT ROUTE 5B (LEMAN BROOK BRIDGE)

COPING WALL TYPE 'CW-3' PIECE DETAILS

DRAWING NO. 5
CONTRACT NO. (IF TOWN) ____
PCE JOB/MILL NO. ____
DESIGNED J.D. SLAVO

DATE	BY	CHKD	APPROVED	SCALE	AS NOTED
3/28/17	A.P.	D.B.	C.P.	DRAWING NUMBER	4728S164
				324-8DW5164-001	REVISION NO. 00 PO/QUOT 3417

SHEET 5 OF 5

CW-3
(1) REQ'D.

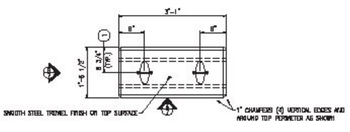

PLAN VIEW - PIECE TYPE 'CW-4'
SCALE 3/4"=1'-0"

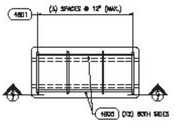

REINFORCING PLAN VIEW
SCALE 3/4"=1'-0"

SIGHT RAY LENGTHS SHOWN REPRESENT RAW LENGTHS BEFORE BENDING AND ACCOUNT FOR HOOKS AND STRETCHING DURING BENDING. BAR LENGTHS ROUNDED DOWN TO NEAREST 1/4"

BAR CHART (EPOXY COATED)

ITEM	QTY/PC	TOTAL	SIZE	TYPE	LENGTH	AS$
4801	4	4	#4	12	4'-4"	5105400
4806	4	4	#4	STRT.	2'-8"	8105400

MINIMUM 3" MIN. CLEARANCE FROM ALL EXTERIOR SURFACES UNLESS NOTED OTHERWISE.

BILL OF MATERIALS

ITEM	QTY/PC	TOTAL	DESCRIPTION	AS$
1	2	2	MS MEVA44 V-ANCHOR, CAN.	8300642
2	0.22 CY	0.22 CY	NONAIR APPROVED CONCRETE MIX OF INDUSTRIAL MIX (IM) AS NONAIR APPROVED CONCRETE MIX #1 INDUSTRIAL MIX (IM)	SEE SECTION 520 SECTION 541

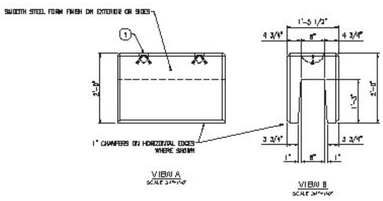

VIEW A
SCALE 3/4"=1'-0"

VIEW B
SCALE 3/4"=1'-0"

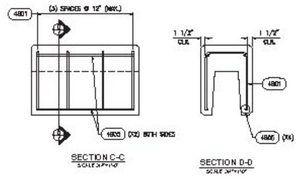

SECTION C-C
SCALE 3/4"=1'-0"

SECTION D-D
SCALE 3/4"=1'-0"

Vermont Agency of Transportation
RECEIVED
CK'D BY CLD OK'D BY WBP
April 6, 2017
RESUBMIT no Approved
BY WPELLETIER DATE 04/07/2017

DESIGN NOTES

CONCRETE MINIMUM STRENGTH = 5,000 PSI @ 28 DAYS.
7,500 PSI REQUIRED FOR STRIPPING AND HANDLING

1. STEEL REINFORCEMENT BEING ASTM A615 GRADE 60, EPOXY COATED
2. COVER TO STEEL = 2" MIN. UNLESS NOTED OTHERWISE.
3. ALL SURFACES TO RECEIVE SMOOTH FORM OR TROWEL FINISH

APPROX. WT. CW-5 = 0.45 TONS
(1) PIECE REQ'D.

INSPECTION TO BE PERFORMED BY VTRANS INSPECTOR OR THEIR DESIGNATED REPRESENTATIVE.

CURVED PLAN SUBMITTED SEPARATELY

BAR WEIGHT TOTALS

#4 BARS	1,553 LBS

SHOP DRAWING REVIEW

REVIEWED AS REQUIRED BY THE CONSTRUCTION CONTRACT DOCUMENTS AND APPROVED, BUT ONLY FOR CONFORMANCE TO THE DESIGN CONCEPT OF THE WORK, AND SUBJECT TO FURTHER LIMITATIONS AND REQUIREMENTS CONTAINED IN THE CONSTRUCTION CONTRACT DOCUMENTS.

REJECTED REVISE AND RESUBMIT APPROVED AS NOTED

CORRECTIONS OR COMMENTS MADE ON THE SHOP DRAWINGS DURING THIS REVIEW DID NOT RELIEVE CONTRACTOR FROM COMPLIANCEWITH REQUIREMENTS OF THE DRAWINGS AND SPECIFICATIONS. THIS CHECK IS ONLY FOR REVIEW OF GENERAL CONFORMANCE WITH THE DESIGN CONCEPT OF THE PROJECT AND GENERAL COMPLIANCE WITH THE INFORMATION GIVEN IN THE CONTRACT DOCUMENTS. THE CONTRACTOR IS RESPONSIBLE FOR CONFIRMING AND CORRELATING ALL QUANTITIES AND DIMENSIONS; SELECTING FABRICATION PROCESSES AND TECHNIQUES OF CONSTRUCTION; COORDINATING THEIR WORK WITH THAT OF ALL OTHER TRADES; AND PERFORMING THEIR WORK IN A SAFE AND SATISFACTORY MANNER.

CLD Consulting Engineers
540 Commercial Street
Manchester, NH 03101
603-668-8223

Job Number: 14-0116
Reviewed by: A. GIRALDI
Date: 4//17

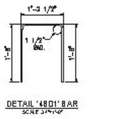

DETAIL '4801' BAR
SCALE 3/4"=1'-0"

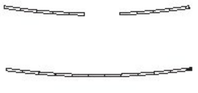

LEGEND
NOT TO SCALE

Oldcastle Precast
535 MIDDLE ST. - BRISTOL, CT
(860) 589-7333 FAX (860) 589-7397

THE INFORMATION ON THIS DRAWING IS PROPRIETARY AND CONFIDENTIAL. SUBMITTED FOR RECIPIENT'S INTERNAL USE ONLY AND IS NOT TO BE USED IN ANY MANNER DETRIMENTAL TO THE INTEREST OF OLDCASTLE PRECAST, INC.

COPYRIGHT © 2017 OLDCASTLE PRECAST, INC. ALL RIGHTS RESERVED.

STATE OF VERMONT; AGENCY OF TRANSPORTATION
ST. JOHNSBURY, VT
VERMONT ROUTE 18 (LIBBY BRIDGE APPROACH)

COPING WALL TYPE 'CW-4' PIECE DETAILS

DRAWING NO. 6 SHT. ——
CONTRACT NO. SF 7000(124)
PCI QUALITY GROUP ——
DESIGNED J.D. SILVIO

DATE	SALES	DRAWN	ENGINEER	CHECKED	APPLICATION
3/28/17	A.Z.	D.B.	C.P.		4/28/2164

DRAWING NUMBER
324-8DW0194-001

REVISION NO. 00 DATE 04/07/2017

SHEET 7 OF 8

CW-4
(1) REQ'D.

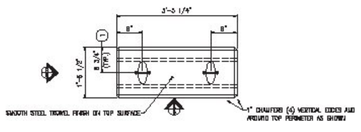

PLAN VIEW - PIECE TYPE 'CW-5'
SCALE 3/4"=1'-0"

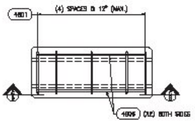

REINFORCING PLAN VIEW
SCALE 3/4"=1'-0"

BAR CHART (EPOXY COATED)

ITEM	QTY/PC	TOTAL	SIZE	TYPE	LENGTH	AGS
4801	5	5	#4	17	4'-4"	5105400
4806	4	4	#4	STRT.	3'-1 1/4"	8102400

BEND BAR LENGTHS SHOWN REPRESENT BAR LENGTHS BEFORE BENDING AND ACCOUNT FOR KNOCKS AND STRETCHING DURING BENDING. BAR LENGTHS ROUNDED DOWN TO NEAREST 1/4"

MAINTAIN 1" MIN. CLEARANCE FROM ALL EXTERIOR SURFACES UNLESS NOTED OTHERWISE.

BILL OF MATERIALS

ITEM	QTY/PC	TOTAL	DESCRIPTION	AGS
1	2	2	MS MEVA44 V-ANCHOR, CAN.	8300642
2	0.35 CY	0.35 CY	NEWCRETE APPROVED CONCRETE MIX OF INTEGRATED AIR (5%) AS NEWCRETE APPROVED CONCRETE MIX #1 INTEGRATED AIR (5%)	5605041 EA 5605041 EA

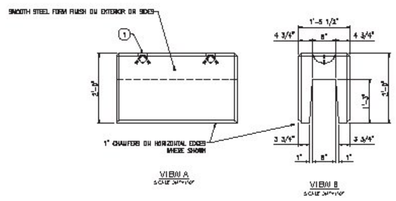

VIEW A
SCALE 3/4"=1'-0"

VIEW B
SCALE 3/4"=1'-0"

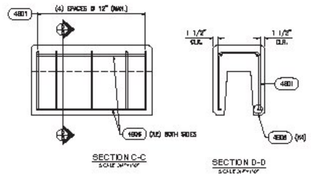

SECTION C-C
SCALE 3/4"=1'-0"

SECTION D-D
SCALE 3/4"=1'-0"

Vermont Agency of Transportation
RECEIVED
CK'D BY CLD OK'D BY WBP
April 6, 2017
RESUBMIT no Approved
BY WPELLETIER DATE 04/07/2017

DESIGN NOTES

CONCRETE MINIMUM STRENGTH = 5,000 PSI @ 28 DAYS.
7,500 PSI REQUIRED FOR STRIPPING AND HANDLING
1. STEEL REINFORCEMENT BEING ASTM A615 GRADE 60, EPOXY COATED
2. COVER TO STEEL = 2" MIN. UNLESS NOTED OTHERWISE.
3. ALL SURFACES TO RECEIVE SMOOTH FORM OR TROWEL FINISH

APPROX. WT. CW-5 = 0.01 TONS
(1) PIECE REQ'D.

INSPECTION TO BE PERFORMED BY VTRANS INSPECTOR OR THEIR DESIGNATED REPRESENTATIVE.

CURING PLAN SUBMITTED SEPARATELY

BAR WEIGHT TOTALS

#4 BARS	22.77 LBS.

SHOP DRAWING REVIEW

[X] REVIEWED AS REQUIRED BY THE CONSTRUCTION CONTRACT DOCUMENTS AND APPROVED, BUT ONLY FOR CONFORMANCE TO THE DESIGN CONCEPT OF THE WORK, AND SUBJECT TO FURTHER LIMITATIONS AND REQUIREMENTS CONTAINED IN THE CONSTRUCTION CONTRACT DOCUMENTS.

[ ] REJECTED [ ] REVISE AND RESUBMIT [ ] APPROVED AS NOTED

CORRECTIONS OR COMMENTS MADE ON THE SHOP DRAWINGS DURING THIS REVIEW DID NOT RELIEVE CONTRACTOR FROM COMPLIANCEWITH REQUIREMENTS OF THE DRAWINGS AND SPECIFICATIONS. THIS CHECK IS ONLY FOR REVIEW OF GENERAL CONFORMANCE WITH THE DESIGN CONCEPT OF THE PROJECT AND GENERAL COMPLIANCE WITH THE INFORMATION GIVEN IN THE CONTRACT DOCUMENTS. CONTRACTOR IS RESPONSIBLE FOR: CONFIRMING AND CORRELATING ALL QUANTITIES AND DIMENSIONS; SELECTING FABRICATION PROCESSES AND TECHNIQUES OF CONSTRUCTION; COORDINATING THEIR WORK WITH THAT OF ALL OTHER TRADES; AND PERFORMING THEIR WORK IN A SAFE AND SATISFACTORY MANNER.

CLD Consulting Engineers
540 Commercial Street
Manchester, NH 03101
603-668-8223

Job Number: 14-011B
Reviewed by: A. GIRALDI
Date: 4/7/17

DETAIL '4801' BAR
SCALE 3/4"=1'-0"



LEGEND
NOT TO SCALE

Oldcastle Precast
105 NEWAY RD. • ADDISON, VT 05491
(802) 759-7555 FAX (802) 759-7597

THE INFORMATION ON THIS DRAWING IS PROPRIETARY AND CONFIDENTIAL AND IS THE EXCLUSIVE PROPERTY OF OLDCASTLE PRECAST, INC. ("OLDCASTLE"). IT IS NOT TO BE USED, COPIED, REPRODUCED OR DISCLOSED TO ANY PERSON OR ENTITY WITHOUT THE PRIOR WRITTEN PERMISSION OF OLDCASTLE PRECAST, INC.

COPYRIGHT © 2017 OLDCASTLE PRECAST, INC. ALL RIGHTS RESERVED.

STATE OF VERMONT: AGENCY OF TRANSPORTATION
ST. JOHNSBURY, VT
VERMONT ROUTE 5B (LEMAN MANOR AVENUE)

COPING WALL TYPE 'CW-5' PIECE DETAILS

DRAWING NO. 5 REV. ——
CONTRACT NO. BF 7000(124)
PCE JOB/MILL NO. ——

DESIGNED	DRAWN	CHECKED	DETAILED	ORIGINAL DRAWING
JJS, SE/PD				
3/28/17	A.E.	D.E.	C.P.	07282164

DRAWING NUMBER: 324-BF0007(124)-021

REVISION NO.	SHEET
00 (04/07/2017)	5 OF 5

CW-5
(1) REQ'D.

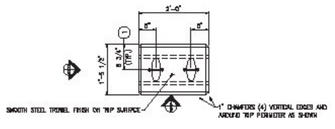

PLAN VIEW – PIECE TYPE 'CW1-6'
SCALE 3/4"=1'-0"

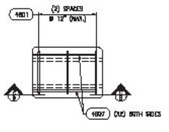

REINFORCING PLAN VIEW
SCALE 3/4"=1'-0"

SHOP DWG LENGTHS SHOWN REPRESENT END LENGTHS BEFORE BENDING AND ACCOUNT FOR HOOKS AND STRETCHING DURING BENDING. (BAR LENGTHS ROUNDED DOWN TO NEAREST 1/4")

BAR CHART (EPOXY COATED)

ITEM	QTY/PC	TOTAL	SIZE	TYPE	LENGTH	AS$
4801	3	6	#4	12	1'-4"	5105400
4807	4	8	#4	STRT.	1'-9 3/4"	8105400

MAINTAIN 2" MIN. CLEARANCE FROM ALL EXTERIOR SURFACES UNLESS NOTED OTHERWISE.

BILL OF MATERIALS

ITEM	QTY/PC	TOTAL	DESCRIPTION	AS$
1	2	4	MS MW44 V-ANCHOR, GALV.	8300442
2	0.21 CY	0.42 CY	NEWCRETE APPROVED CONCRETE MIX OF INDUSTRIAL MIX (IM) OR NEWCRETE APPROVED CONCRETE MIX #1 INDUSTRIAL MIX (IM)	5605041 OR 5607041

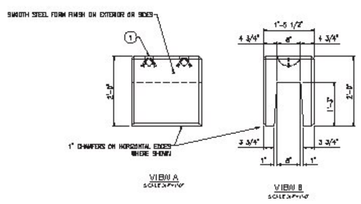

VIEW A
SCALE 3/4"=1'-0"

VIEW B
SCALE 3/4"=1'-0"

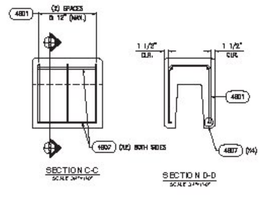

SECTION C-C
SCALE 3/4"=1'-0"

SECTION D-D
SCALE 3/4"=1'-0"

Vermont Agency of Transportation
RECEIVED
CK'D BY CLD
OK'D BY MBP
April 6, 2017
RESUBMIT NO
BY MPELLETIER
Approved
DATE 04/07/2017

DESIGN NOTES

CONCRETE MINIMUM STRENGTH = 5,000 PSI @ 28 DAYS.
7,500 PSI REQUIRED FOR STRIPPING AND HANDLING

1. STEEL REINFORCEMENT BEING ASTM A615 GRADE 60, EPOXY COATED
2. COVER TO STEEL = 2" MIN. UNLESS NOTED OTHERWISE.
3. ALL SURFACES TO RECEIVE SMOOTH FORM OR TROWEL FINISH

APPROX. WT. CW-6 = 0.21 TONS
(2) PIECES REQ'D.

INSPECTION TO BE PERFORMED BY VTRANS INSPECTOR OR THEIR DESIGNATED REPRESENTATIVE.

CURVED PLAN SUBMITTED SEPARATELY

BAR WEIGHT TOTALS

#4 BARS	37.25 LBS.

SHOP DRAWING REVIEW

[X] REVIEWED AS REQUIRED BY THE CONSTRUCTION CONTRACT DOCUMENTS AND APPROVED, BUT ONLY FOR CONFORMANCE TO THE DESIGN CONCEPT OF THE WORK, AND SUBJECT TO FURTHER LIMITATIONS AND REQUIREMENTS CONTAINED IN THE CONSTRUCTION CONTRACT DOCUMENTS.

[ ] REJECTED [ ] REVISE AND RESUBMIT [ ] APPROVED AS NOTED

CORRECTIONS OR COMMENTS MADE ON THE SHOP DRAWINGS DURING THIS REVIEW DID NOT RELIEVE CONTRACTOR FROM COMPLIANCEWITH REQUIREMENTS OF THE DRAWINGS AND SPECIFICATIONS. THIS CHECK IS ONLY FOR REVIEW OF GENERAL CONFORMANCE WITH THE DESIGN CONCEPT OF THE PROJECT AND GENERAL COMPLIANCE WITH THE INFORMATION GIVEN IN THE CONTRACT DOCUMENTS. THE CONTRACTOR IS RESPONSIBLE FOR: CONFIRMING AND CORRELATING ALL QUANTITIES AND DIMENSIONS; SELECTING FABRICATION PROCESSES AND TECHNIQUES OF CONSTRUCTION; COORDINATING THEIR WORK WITH THAT OF ALL OTHER TRADES; AND PERFORMING THEIR WORK IN A SAFE AND SATISFACTORY MANNER.

CLD Consulting Engineers
540 Commercial Street
Manchester, NH 03101
603-668-8223

Job Number: 14-0116
Reviewed by: A. GIRALDI
Date: 4/7/17

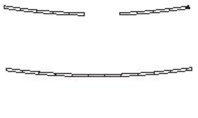

LEGEND
NOT TO SCALE

Oldcastle Precast
105 NEWAY - ROUTE 7 SOUTH
(802) 897-7555 FAX (802) 897-7557

THE INFORMATION ON THIS DRAWING IS PROPRIETARY AND IS THE PROPERTY OF OLDCASTLE PRECAST, INC. IT IS SUBMITTED IN CONFIDENCE AND SHALL NOT BE USED IN WHOLE OR IN PART FOR PURPOSES OTHER THAN THOSE AUTHORIZED BY OLDCASTLE PRECAST, INC.

COPYRIGHT © 2017 OLDCASTLE PRECAST, INC. ALL RIGHTS RESERVED.

STATE OF VERMONT: AGENCY OF TRANSPORTATION
ST. JOHNSBURY, VT
VERMONT ROUTE 5B (LEMAN MEADOW APPROACH)

CULVERT WALL TYPE 'CW1-6' PIECE DETAILS

DRAWING NO. 5
CONTRACT NO. SF 7000(124)
PCC JOB/MILL NO. ____
DESIGNED J.D. SILVIO
DRAWN A.E.
DETAILED D.E.
CHECKED C.P.
DATE ISSUED 4/7/17
DRAWING NUMBER 324-8D08194-021
REVISION NO RESUBMIT 4/6/17
SHEET 9 OF 9

CW-6
(2) REQ'D.

From: Cameron Abernathy
To: Fowler, Chris (Precast)
Cc: Jordan Koeppen; Bryce, Dave; "pat@jpsicard.com"; Harris, Jason; Shippee, Nick
Subject: RE: St. Johnsbury BF 7000 Wall Cap
Date: Friday, March 31, 2017 3:07:33 PM
Attachments: image001.png

If you look at our drawings we show the coping running past the end of the wall at WP4. Because the grade will be up to the bottom of the coping at this point, I so no issue with having a little coping overhanging the wall at this location. Thus you take what you have proposed and they install the cast in place portion per the contract plans then you can set each piece of coping going outward. What is left at each end can overhang as needed and it will not be an issue.

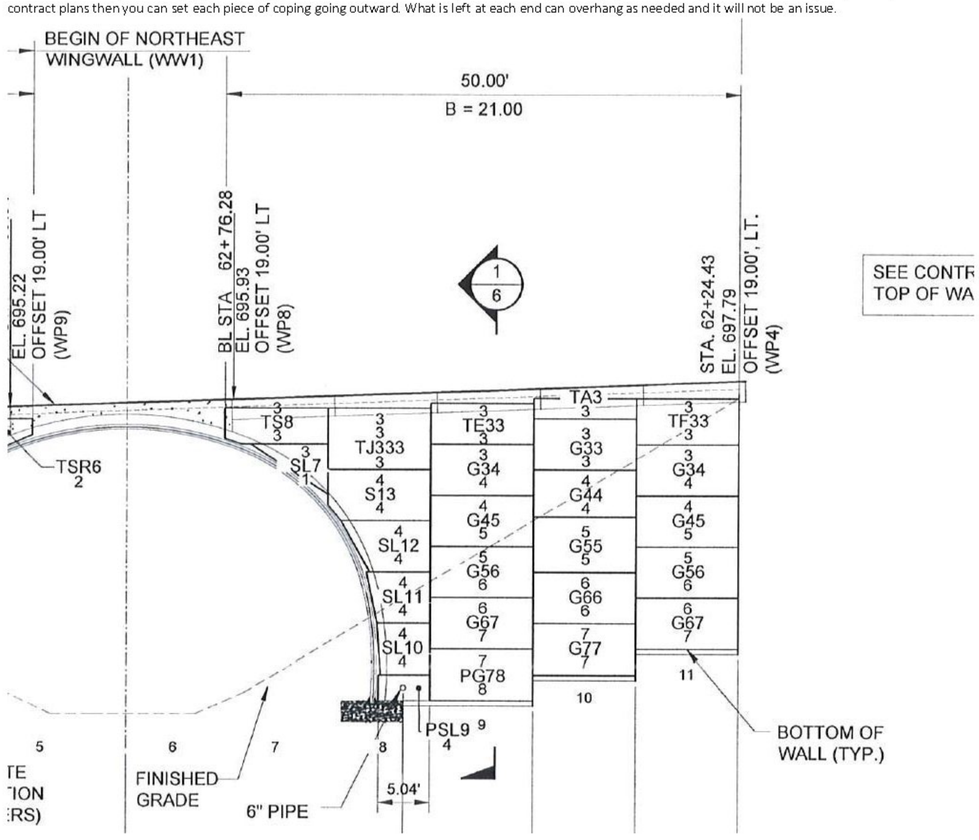

Cameron Abernathy, PE
Department Manager – Civil Products Engineering
Big R Bridge | www.bigrbridge.com
Vist-A-Wall Systems | vistawallsystems.com
T 970-347-2216 | **C** 970-373-7197

From: Fowler, Chris (Precast) |mailto:Chris.Fowler@oldcastle.com|
Sent: Friday, March 31, 2017 12:01 PM
To: Cameron Abernathy <cabernathy@bigrbridge.com>
Cc: Jordan Koeppen <jkoeppen@bigrbridge.com>; Bryce, Dave <Dave.Bryce@oldcastle.com>; 'pat@jpsicard.com' <pat@jpsicard.com>; Harris, Jason <Jason.Harris@oldcastle.com>; Shippee, Nick <Nick.Shippee@oldcastle.com>
Subject: FW: St. Johnsbury BF 7000 Wall Cap

Cameron, Please see reviewer comment on layout. Do you agree with it and does it reconcile with your wall panel layout?

I trust that the coping layout should match the wall below?

Please advise.

Thanks, Chris

J.P. SICARD, INC.
Barton, Vermont
802-525-9506
www.jpsicard.com

PO Box 508
Barton, VT 05822
Phone: (802)525-9506
Fax: (802)525-4616
www.jpsicard.com

RECEIVED
By Wendy Pelletier, PE at 9:07 am, Mar 26, 2017

Vermont Agency of Transportation
RECEIVED
CK'D BY cld OK'D BY WBP
March 26, 2017
RESUBMIT NO Approved
BY WPELLETIER DATE 03/28/2017

Submittal Data Sheet

Submittal #: 10

Submission #: 3

Date: 3/24/17

Project Name: St. Johnsbury BF 7000 (20)

Owner: State of Vermont Agency of Transportation

Division:

Contractor: J.P. Sicard Inc.

Item Number: 525.45

Supplier: Harris Rebar

Description of Item: Bridge Railing - Concrete Combination - Reinforcing Steel

Subsitution: NO

Engineers Review Comments:

Submitted By: Pat Uhsmann
Title: Project Manager
Company: JP Sicard Inc

SHOP DRAWING REVIEW

☒ REVIEWED AS REQUIRED BY THE CONSTRUCTION CONTRACT DOCUMENTS AND APPROVED, BUT ONLY FOR CONFORMANCE TO THE DESIGN CONCEPT OF THE WORK, AND SUBJECT TO FURTHER LIMITATIONS AND REQUIREMENTS CONTAINED IN THE CONSTRUCTION CONTRACT DOCUMENTS.

☐ REJECTED ☐ REVISE AND RESUBMIT ☐ APPROVED AS NOTED

CORRECTIONS OR COMMENTS MADE ON THE SHOP DRAWINGS DURING THIS REVIEW DID NOT RELIEVE CONTRACTOR FROM COMPLIANCEWITH REQUIREMENTS OF THE DRAWINGS AND SPECIFICATIONS. THIS CHECK IS ONLY FOR REVIEW OF GENERAL CONFORMANCE WITH THE DESIGN CONCEPT OF THE PROJECT AND GENERAL COMPLIANCE WITH THE INFORMATION GIVEN IN THE CONTRACT DOCUMENTS. THE CONTRACTOR IS RESPONSIBLE FOR: CONFIRMING AND CORRELATING ALL QUANTITIES AND DIMENSIONS; SELECTING FABRICATION PROCESSES AND TECHNIQUES OF CONSTRUCTION; COORDINATING THEIR WORK WITH THAT OF ALL OTHER TRADES; AND PERFORMING THEIR WORK IN A SAFE AND SATISFACTORY MANNER.

CLD Consulting Engineers
540 Commercial Street
Manchester, NH 03101
603-668-8223

Job Number: 14-0116
Reviewed by: AEG
Date: 3/28/17

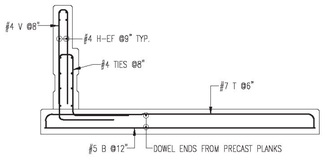

1 SECTION

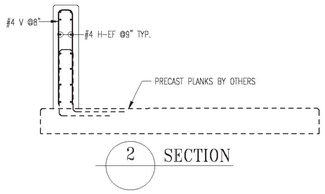

2 SECTION

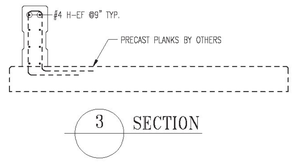

3 SECTION

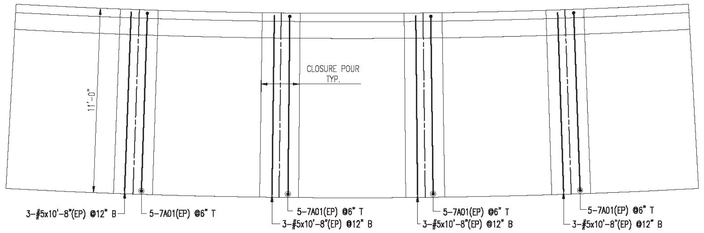

NORTH RAIL SUPPORT SLAB LAYOUT

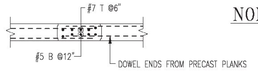

TYP. CLOSURE @ NORTH SUPPORT

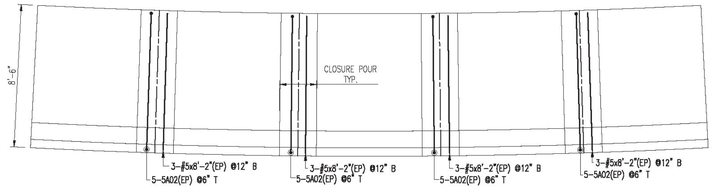

SOUTH RAIL SUPPORT SLAB LAYOUT

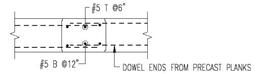

TYP. CLOSURE @ SOUTH SUPPORT

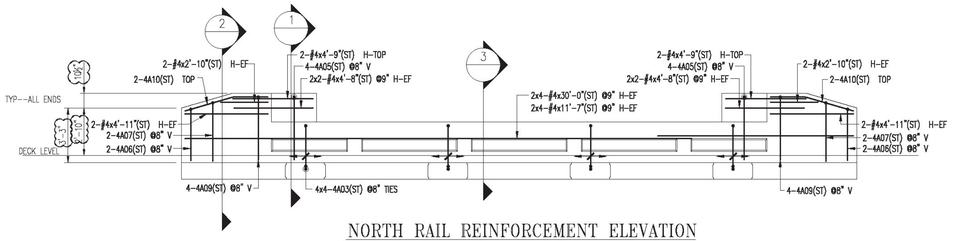

NORTH RAIL REINFORCEMENT ELEVATION

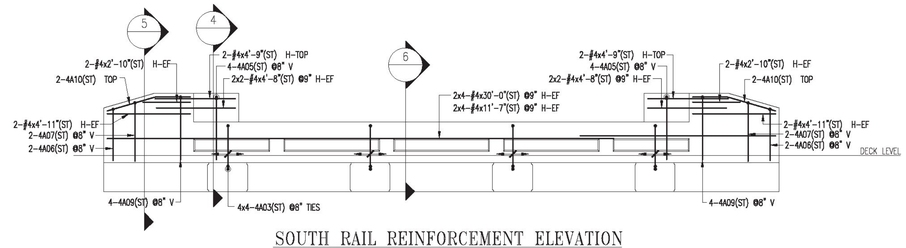

SOUTH RAIL REINFORCEMENT ELEVATION

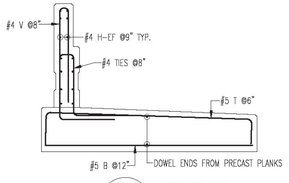

4 SECTION

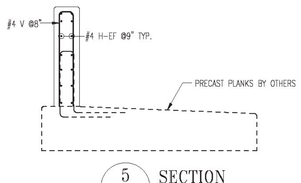

5 SECTION

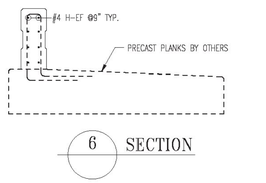

6 SECTION

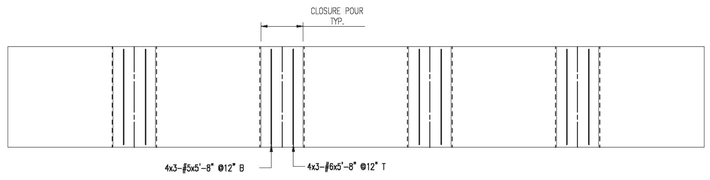

WEST FOOTING CLOSURES REINFORCEMENT

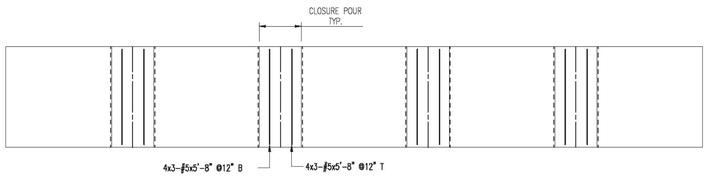

EAST FOOTING CLOSURES REINFORCEMENT

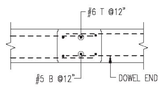

TYP. CLOSURE @ WEST FOOTING

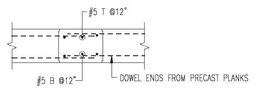

TYP. CLOSURE @ EAST FOOTING

4-1/2" IS THE ABSOLUTE MINIMUM BEND FOR #4

TAKES INTO ACCOUNT (1) BAR THICKNESS FOR OUT TO OUT DIMENSION

Drawing Sheet : R01

BAR LIST

Bar Mark	Qty	Size	Total Length	Type	'A'	'B'	'C'	'D'	'E'	'F'	'G'	'H'	'J'	'K'	'O'	'X'
4A03	32	#4	10'-4"	H66		2'-2"	2'-1 X'		1'	2'-5 X'	2'-2 X'					3 X'
4A05	16	#4	7'-10 X'	17		3'-8"	4 X'		3'-8"							
4A06	8	#4	6'-8"	17		3'-1"			3'-1"							
4A07	8	#4	7'-7"	17		3'-6"	1'		3'-6"							
4A08	16	#4	8'-1"	17		3'-9"	1'		3'-9"							
4A10	6	#4	5'-4"	3		2'-11 X'	2'-1 X'					7 X'		2'-0"	4'-11 X'	
	16	#4	30'-0"			30'-0"										
	16	#4	11'-7"			11'-7"										
	8	#4	4'-11"			4'-11"										
	16	#4	4'-8"			4'-8"										
	8	#4	4'-9"			4'-9"										
	2	#4	7'-6"			7'-6"										
	2	#4	7'-6"			7'-6"										
	8	#4	2'-10"			2'-10"										
5A02	20	#5	10'-8"	17		1'-4"	8'-2"		1'-0"							
	12	#5	8'-2"			8'-2"										
	12	#5	10'-8"			10'-8"										
	2	#5	7'-8"			7'-8"										
7A01	20	#7	11'-10"	17		1'	10'-8"		1'							
	36	#5	5'-8"			5'-8"										
	2	#5	7'-6"			7'-6"										
	12	#6	5'-8"			5'-8"										
	2	#6	7'-6"			7'-6"										

SAME LENGTHS DIFF. GRADES

(ST) (EP) (BL) (EP)

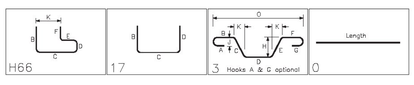

TEST BARS

2-#5x2'-6" TEST
2-#6x2'-6" TEST
2-#5x2'-6"(EP) TEST
2-#4x2'-6"(EP) TEST
2-#4x2'-6"(ST) TEST

SHOP DRAWING REVIEW

☒ REVIEWED AS REQUIRED BY THE CONSTRUCTION CONTRACT DOCUMENTS AND APPROVED, BUT ONLY FOR CONFORMANCE TO THE DESIGN CONCEPT OF THE WORK, AND SUBJECT TO FURTHER LIMITATIONS AND REQUIREMENTS CONTAINED IN THE CONSTRUCTION CONTRACT DOCUMENTS.

☐ REJECTED ☐ REVISE AND RESUBMIT ☐ APPROVED AS NOTED

CORRECTIONS OR COMMENTS MADE ON THE SHOP DRAWINGS DURING THIS REVIEW DID NOT RELIEVE CONTRACTOR FROM COMPLIANCEWITH REQUIREMENTS OF THE DRAWINGS AND SPECIFICATIONS. THIS CHECK IS ONLY FOR REVIEW OF GENERAL CONFORMANCE WITH THE DESIGN CONCEPT OF THE PROJECT AND GENERAL COMPLIANCE WITH THE INFORMATION GIVEN IN THE CONTRACT DOCUMENTS. THE CONTRACTOR IS RESPONSIBLE FOR: CONFIRMING AND CORRELATING ALL QUANTITIES AND DIMENSIONS; SELECTING FABRICATION PROCESSES AND TECHNIQUES OF CONSTRUCTION; COORDINATING THEIR WORK WITH THAT OF ALL OTHER TRADES; AND PERFORMING THEIR WORK IN A SAFE AND SATISFACTORY MANNER.

CLD Consulting Engineers
540 Commercial Street
Manchester, NH 03101
603-668-8223

Job Number: 14-0116
Reviewed by: AEG
Date: 3/28/17

ENG. AND ARCH. PLEASE VERIFY ALL CLOUDED AREAS

PLACING DRAWING APPROVAL AUTHORITY: VERIFICATION OF DIMENSIONS, DETAILS, ETC ARE REQUESTED WHERE INDICATED. IF EACH VERIFICATION IS NOT NOTED OTHERWISE, IT WILL BE ASSUMED TO BE CORRECT AS SHOWN.

ALL MATERIAL ON THIS DRAWING NOTED AS (ST) SHALL BE GR 2304 STAINLESS STEEL BAR

ALL MATERIAL ON THIS DRAWING NOTED AS (EP) SHALL BE ASTM A775 GR 60 EPOXY CTD BAR

LAP CHART-U.N.O.

SIZE	TOP BARS ★	OTHER BARS
#11		
#10		
#9		
#8		
#7		
#6		
#5		
#4	26"	26"
#3		

★ -Top bars are horiz. bars with more than 12" of concrete cast below the bars.

No.	Description	Date	By
1	FINAL APPROVAL PRINT	03/08/17	CPS
0	APPROVAL PRINT	02/02/17	CPS

Revisions and Issue Record

The full intent and purpose of this drawing is the placing of reinforcing steel bars ONLY. It is NOT to be used as a means of communication between the Architect, Engineer, Contractor or any other Sub-trades.

THIS DRAWING IS NOT TO BE SCALED.

HarrisRebar Barker Steel — National Strength. Local Service.

DETAILED AT:
CANAAN
NEW HAMPSHIRE

Project: ST JOHNSBURY BF 7000 (20)
ST JOHNSBURY VT

Drawing: BRIDGE
REINFORCEMENT

Customer: SICARD CONSTRUCTION

Engineer: CLD

Refer to Release:

Date	Drawn	Chkd.	JOB No.	Dwg. No.
02/01/17	CPS		33506249	R01

W:\(sample\Projects\33506249\Placing Drawings\DWGs\R01.dwg

PO Box 508
Barton, VT 05822
Phone: (802)525-9506
Fax: (802)525-4616
www.jpsicard.com

Submittal Data Sheet

Submittal #: 7

Submission #: 1

Date: 2/16/17

Project Name: St. Johnsbury BF 7000 (20)

Owner: State of Vermont Agency of Transportation

Division:

Contractor: J.P. Sicard Inc.

Item Number: 525.45

Supplier: Lafayette Highway Specialties

Description of Item: Bridge Railing

Subsitution: NO

Engineers Review Comments:

Submitted By:	Pat Uhsmann
Title:	Project Manager
Company:	JP Sicard Inc

Vermont Agency of Transportation
RECEIVED
CK'D BY CLD/RYAN OK'D BY WPELLETIER
February 27, 2017
RESUBMIT nO Approved AsNoted
BY WPELLETIER DATE 03/02/2017

Mr. Jim Lacroix,

I am preparing to submit drawings for St Johnsbury BF 7000(20) but I would like to check a few details first.

Ref . the following table for similarities / differences between existing jobs.

Job	Height @ wall	Dist. from anchor plate to center of first slot	Dist. from end of rail to first hole	Length of fill plate
Chelsea (09)	2'-10"	4 1/2"	Not specified	17"
Chelsea (10)	2'-10"	4 1/2	Not specified	17"
Ludlow	2'-10"	4 1/2	2 1/2"	17"
St. Johnsbury (20)	3'-0"	6 1/2"	4"	16"

Are all these changes intended?

Also: Sheet 49 (of 70), Railing angle shows 3/8" / ft for top rail & 1/8" / ft. for bottom rail. I come up with 1/4" / ft. for the top rail and 1/16" / ft for the bottom rail -see accompanying sheet (This brings to question the 3'-0" height at the wall)

Sheet 50. Dimension to the center of the 7"slots, shown as 2 3/4", should be 2 11/16".

Sheet 51. This is calling for a bent splice tube. The other jobs utilize a straight splice tube (which works fine) and they have a greater angle due to their shorter length. A straight splice tube will work for this application and was what was quoted.

Thank you,

Eugene Peek

Eugene Peek

From: Lacroix, James <James.Lacroix@vermont.gov>
Sent: Tuesday, February 14, 2017 1:46 PM
To: Eugene Peek
Cc: Douglas Ford; Michael Vail; Dan Long
Subject: RE: St Johnsbury, BF 7000(20)

Hi Eugene,

Sorry for the delay on this. I was out yesterday and have been trying to catch up. Please proceed with shop drawings using the dimensions from Chelsea and Ludlow. In regards to your other questions:

1) Proceed with your calculations for rail slope
2) Proceed with your calculation of this dimension
3) Proceed with straight splice tubes

I have confirmed this with the consultant and they will review the drawings with these changes in mind.

Let me know if you have additional questions or concerns.

Jim

From: Eugene Peek [mailto:epeek@elderlee.com]
Sent: Monday, February 13, 2017 11:25 AM
To: Lacroix, James <James.Lacroix@vermont.gov>
Cc: Douglas Ford <dford@lhsvt.com>; Michael Vail <mvail@elderlee.com>; Dan Long <dlong@elderlee.com>
Subject: St Johnsbury, BF 7000(20)

Mr, James Lacroix,

Please see attached.

Thank you,

Eugene Peek

Elderlee, Inc.
729 Cross Road
Oaks Corners, NY 14518

1-800-344-5917
P: (315) 789-6670
F: (315) 789-6615
epeek@elderlee.com
www.elderlee.com
Quality – Service – Integrity – Safety

CONFIDENTIALITY NOTICE: This email, including any attachments, may contain confidential, copyrighted, and legally privileged information that is intended only for the use of the named recipient(s). If you are not the intended recipient, the reading, copying, forwarding, disclosure or other use of the contents of this email is strictly prohibited. If you have received this message in error, please notify the sender immediately by reply email and delete and/or destroy this email, any attachments, and electronic or physical copies thereof. Thank you.

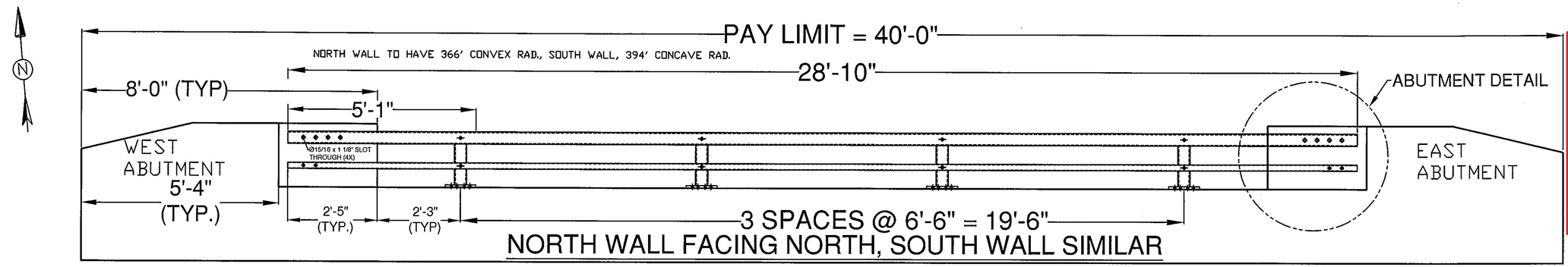

SHOP DRAWING REVIEW

☐ REVIEWED AS REQUIRED BY THE CONSTRUCTION CONTRACT DOCUMENTS AND APPROVED, BUT ONLY FOR CONFORMANCE TO THE DESIGN CONCEPT OF THE WORK, AND SUBJECT TO FURTHER LIMITATIONS AND REQUIREMENTS CONTAINED IN THE CONSTRUCTION CONTRACT DOCUMENTS.

☐ REJECTED ☐ REVISE AND RESUBMIT ☒ APPROVED AS NOTED

CORRECTIONS OR COMMENTS MADE ON THE SHOP DRAWINGS DURING THIS REVIEW DID NOT RELIEVE CONTRACTOR FROM COMPLIANCE WITH REQUIREMENTS OF THE DRAWINGS AND SPECIFICATIONS. THIS CHECK IS ONLY FOR REVIEW OF GENERAL CONFORMANCE WITH THE DESIGN CONCEPT OF THE PROJECT AND GENERAL COMPLIANCE WITH THE INFORMATION GIVEN IN THE CONTRACT DOCUMENTS. THE CONTRACTOR IS RESPONSIBLE FOR: CONFIRMING AND CORRELATING ALL QUANTITIES AND DIMENSIONS; SELECTING FABRICATION PROCESSES AND TECHNIQUES OF CONSTRUCTION; COORDINATING THEIR WORK WITH THAT OF ALL OTHER TRADES; AND PERFORMING THEIR WORK IN A SAFE AND SATISFACTORY MANNER.

CLD Consulting Engineers
540 Commercial Street
Manchester, NH 03101
603-668-8223

Job Number: 140116
Reviewed by: S.Beaumont
Date: 02/27/2017

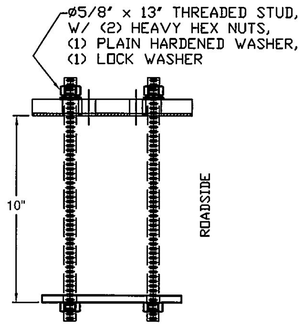

ANCHORAGE DETAIL

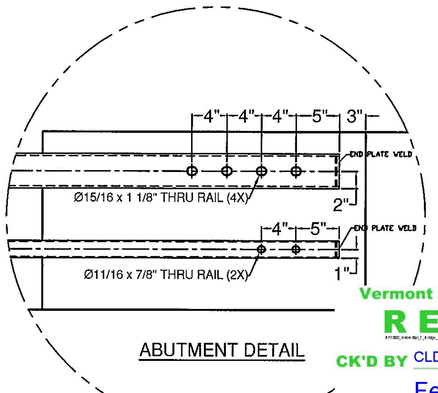

ABUTMENT DETAIL

Vermont Agency of Transportation
RECEIVED
CK'D BY CLD/RYAN OK'D BY WPELLETIER
February 27, 2017
RESUBMIT nO Approved AsNoted
BY WPELLETIER DATE 03/02/2017

COATED BLACK

BILL OF MATERIAL				
ITEM #	QTY	PART #	DESCRIPTION	ASTM DESIGNATION
1	8	0033.90017	TWO RAIL POST & BASE PLATE ASSEMBLY	A572 Gr. 50, A500 Gr. B
2N	1	TBD	4" X 3" X 1/4" RAIL @ 28'-10" W/ END PLATES & 366' CONVEX R.	A500 Gr. B / A572 Gr. 50
2S	1	TBD	4" X 3" X 1/4" RAIL @ 28'-10" W/ END PLATES & 394' CONCAVE R.	A500 Gr. B / A572 Gr. 50
3N	1	TBD	2" X 2" X 1/8" RAIL @ 28'-10" W/ END PLATES & 366' CONVEX R.	A500 Gr. B / A572 Gr. 50
3S	1	TBD	2" X 2" X 1/8" RAIL @ 28'-10" W/ END PLATES & 394' CONCAVE R.	A500 Gr. B / A572 Gr. 50
4	16	0033.00295	3/8" X 2 1/4" X 7 3/8" ANCHOR PLATES	A36
5	34*	0042.05813	Ø 5/8" X 13" ANCHOR STUDS	A449
6	66*	0080.15901	Ø 5/8" HEAVY HEX NUTS	A563
7	32	0080.15911	Ø 5/8" FLAT WASHERS	F436
8	32	0080.15920	Ø 5/8" LOCK WASHERS	ASME B18.21
9	8	0080.05565	Ø 5/8" X 7 1/2" SLOTTED, ROUND HEAD BOLT, NUT, F.W., & L.W.	A449, A563, F436, & ASME B18.21
10	8	0080.06410	Ø 3/4" X 8 1/2" SLOTTED, ROUND HEAD BOLT, NUT, F.W., & L.W.	A449, A563, F436, & ASME B18.21
11	8	0033.00053	1/8" ELASTOMERIC PAD	D2240
12	8	0080.05760	Ø 5/8" X 13" SLOTTED, ROUND HEAD BOLT, NUT, F.W., & L.W.	A449, A563 DH, F436, & ASME D18.21.1
13	16	0080.07710	Ø 7/8" X 14" SLOTTED, ROUND HEAD BOLT, NUT, F.W., & L.W.	A449, A563 DH, F436, & ASME D18.21.1
14	6	-	DELINEATORS (SUPPLIED BY F.R. LaFAYETTE)	ALUMINUM
15	2	TBD	APPROACH, END WALL CONNECTORS	PER BOM
16	2	TBD	TRAILING, END WALL CONNECTORS	PER BOM

*-2 EXTRA FOR VOAT TESTING

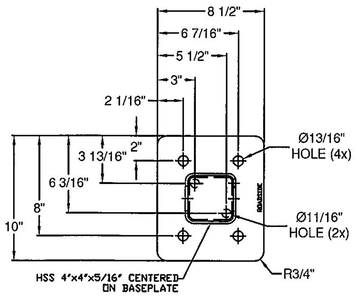

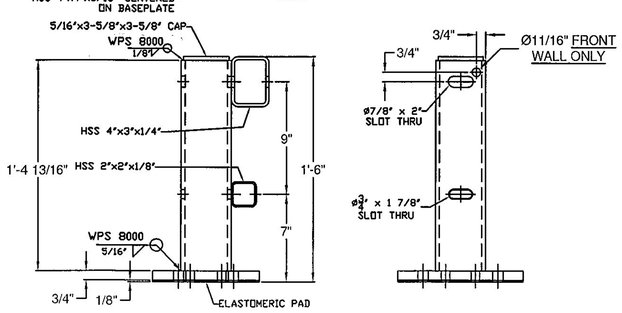

POST DETAIL

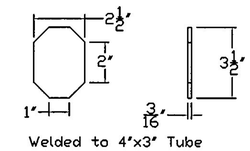

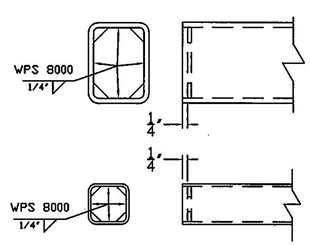

END OF RAIL DETAIL

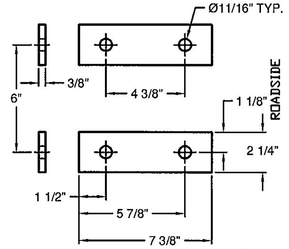

ANCHOR PLATES

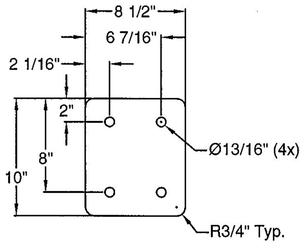

1/8" ELASTOMERIC PAD

HARDWARE NOTES	
ITEM #	FUNCTION
9	BOLT BOTTOM RAIL TO POST (ITEM #1)
10	BOLT TOP RAIL TO POST (ITEM #1)
12	BOLT LOWER RAIL TO CONCRETE
13	BOLT TOP RAIL TO CONCRETE

NOTES:

1. ALL WORK AND MATERIALS SHALL CONFORM TO SECTION 525.
2. PRIOR TO GALVANIZING THE ASSEMBLED POST, GRIND ALL EDGES TO A MINIMUM RADIUS OF 1/16".
3. ALL POSTS SHALL BE SET NORMAL TO GRADE.
4. SECTIONS OF RAIL TUBE SHALL BE ATTACHED TO A MINIMUM OF TWO BRIDGE POSTS AND PREFERABLY TO AT LEAST 4 POSTS.
5. HOLES IN RAILS FOR TUBE ATTACHMENT WILL BE SHOP-DRILLED AND MAY BE FIELD DRILLED. HOLES SHALL BE COATED WITH AN APPROVED ZINC-RICH PAINT PRIOR TO INSTALLATION.
6. BOLTS SHALL BE TORQUED SNUG TIGHT (APPROXIMATELY 100 FT-LB).
7. RAIL TUBES SHALL BE ATTACHED USING FULL DIAMETER BODY ASTM A449 (TYPE I) ROUND HEAD BOLTS INSERTED THROUGH THE FACE OF THE TUBE.
8. SEE STANDARD DRAWING G-1 FOR DETAILS OF DELINEATORS. A DELINEATOR SHALL BE INSTALLED AT 30 FOOT SPACING OR THE NEAREST POST. WHITE IS TO BE INSTALLED ON THE DRIVER'S RIGHT. FOR ONE WAY BRIDGES, YELLOW IS TO BE INSTALLED ON THE DRIVER'S LEFT. PAYMENT FOR DELINEATORS SHALL BE INCIDENTAL TO OTHER ITEMS.
9. AESTHETIC TREATMENT TYPE SHALL BE APPLIED AS SPECIFIED IN THE CONTRACT PLANS. IF NONE IS SPECIFIED IT SHALL NOT BE USED. AESTHETIC TREATMENT DETAILED ON THIS SHEET MAY ALSO BE APPLIED ON THE FASCIA SIDE OF THE RAIL, IF SPECIFIED IN THE CONTRACT PLANS.
10. BRIDGE RAILING SHALL HAVE A RUBBED FINISH IN ACCORDANCE WITH SECTION 501.
11. HOLES FOR MOUNTING DELINEATORS TO BE FIELD DRILLED. HOLES SHALL BE COATED WITH AN APPROVED ZINC-RICH PAINT PRIOR TO INSTALLATION.
12. ALL EXPOSED GALVANIZED STEEL COMPONENTS TO BE POWDER COATED BLACK 27038 PER FEDERAL STANDARD NO 595, & PER ASTM D7803

ITEM #: 525.45

STRUCTURAL STEEL TO COMPLY W/ ASTM A6

TOLERANCE UNLESS OTHERWISE NOTED:
FRACTIONS = ± 1/16"
ANGLES = ± 1/2°
DIAMETERS = ± 1/32"

SHEET 1 OF 2

BRIDGE RAIL DETAILS SHEET

VT. ROUTE 2B (URBAN MINOR ARTERIAL) BRIDGE #6
TOWN OF ST. JOHNSBURY, CALEDONIA COUNTY, VT.

R E V	NO.	DATE	DESCRIPTION	BY

R E V	NO.	DATE	DESCRIPTION	BY

ELDERLEE, INC.
OAKS CORNERS, NEW YORK 14518
email: dlong@elderlee.com / epesk@elderlee.com
Tel: 315-789-6670 Fax: 315-789-6615

CERTIFIED FABRICATOR

ORTHOGRAPHIC PROJECTION

DRAWN	E.P.	2/15/17
CHECKED	D.L.	2/15/17
APPROVED	.	.
SCALE	SCHEMATIC	
DRAWING NO.	FRL-ST. JOHNSBURY (20)	

BILL OF MATERIALS

ITEM #	QTY	DESCRIPTION	ASTM #
1	1	DBL TUBE WALL PLATE - 1" X 12" x 25"	ASTM A572 Gr. 50
2	10	ø3/4" X 10" STUD	TO BE PURCHASED
3	2	5" X 5" X 5/16" TUBE W/ SLOTS @ 18"	ASTM A500 Gr. B
4	2	SHIM PL 1/2" X 4" X 17" W/ SLOTS	ASTM A709 Gr. 36
5	2	SHIM PL 1/2" X 4" X 17" (W/O SLOTS)	ASTM A709 Gr. 36

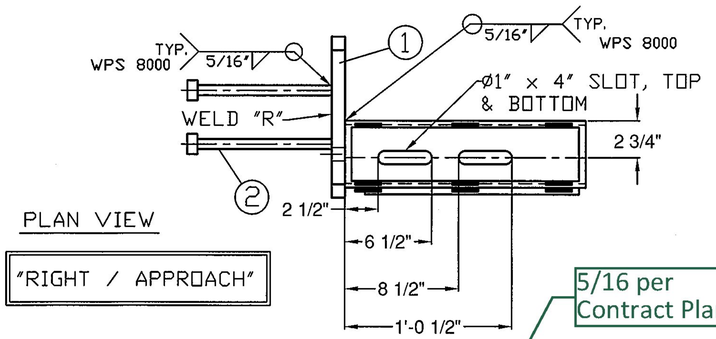

PLAN VIEW

"RIGHT / APPROACH"

PROTRUSIONS CAUSED BY WELDING OR GALVANIZING ARE NOT PERMITTED ON THE SPLICE TUBES AND FILL PLATES

5/16 per Contract Plans

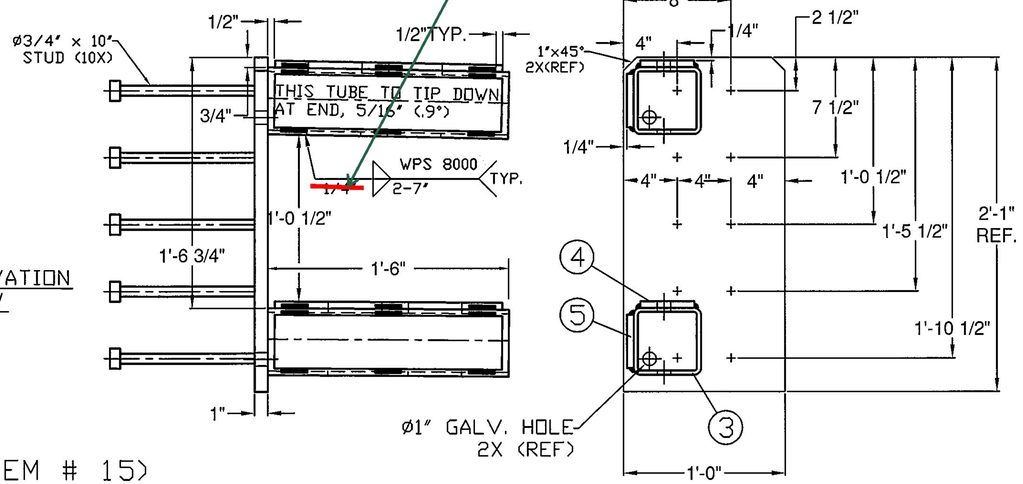

ELEVATION VIEW

(ITEM # 15)

BILL OF MATERIALS

ITEM #	QTY	DESCRIPTION	ASTM #
1	1	DBL TUBE WALL PLATE - 1" X 12" x 25"	ASTM A572 Gr. 50
2	10	ø3/4" X 10" STUD	TO BE PURCHASED
3	2	5" X 5" X 5/16" TUBE W/ SLOTS @ 18"	ASTM A500 Gr. B
4	2	SHIM PL 1/2" X 4" X 17" W/ SLOTS	ASTM A709 Gr. 36
5	2	SHIM PL 1/2" X 4" X 17" (W/O SLOTS)	ASTM A709 Gr. 36

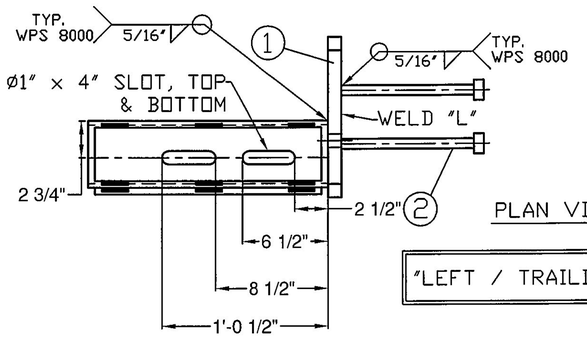

PLAN VIEW

"LEFT / TRAILING"

PROTRUSIONS CAUSED BY WELDING OR GALVANIZING ARE NOT PERMITTED ON THE SPLICE TUBES AND FILL PLATES

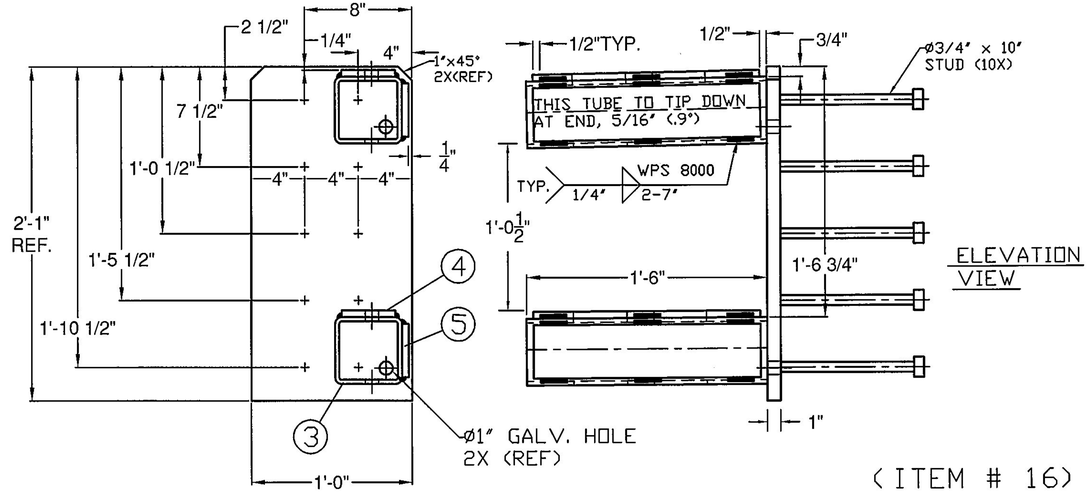

ELEVATION VIEW

(ITEM # 16)

Vermont Agency of Transportation

RECEIVED

CK'D BY CLD/RYAN OK'D BY WPELLETIER

February 27, 2017

RESUBMIT nO Approved AsNoted

BY WPELLETIER DATE 03/02/2017

SHOP DRAWING REVIEW

☐ REVIEWED AS REQUIRED BY THE CONSTRUCTION CONTRACT DOCUMENTS AND APPROVED, BUT ONLY FOR CONFORMANCE TO THE DESIGN CONCEPT OF THE WORK, AND SUBJECT TO FURTHER LIMITATIONS AND REQUIREMENTS CONTAINED IN THE CONSTRUCTION CONTRACT DOCUMENTS.

☐ REJECTED ☐ REVISE AND RESUBMIT ☒ APPROVED AS NOTED

CORRECTIONS OR COMMENTS MADE ON THE SHOP DRAWINGS DURING THIS REVIEW DID NOT RELIEVE CONTRACTOR FROM COMPLIANCE WITH REQUIREMENTS OF THE DRAWINGS AND SPECIFICATIONS. THIS CHECK IS ONLY FOR REVIEW OF GENERAL CONFORMANCE WITH THE DESIGN CONCEPT OF THE PROJECT AND GENERAL COMPLIANCE WITH THE INFORMATION GIVEN IN THE CONTRACT DOCUMENTS. THE CONTRACTOR IS RESPONSIBLE FOR: CONFIRMING AND CORRELATING ALL QUANTITIES AND DIMENSIONS; SELECTING FABRICATION PROCESSES AND TECHNIQUES OF CONSTRUCTION; COORDINATING THEIR WORK WITH THAT OF ALL OTHER TRADES; AND PERFORMING THEIR WORK IN A SAFE AND SATISFACTORY MANNER.

CLD Consulting Engineers
540 Commercial Street
Manchester, NH 03101
603-668-8223

Job Number: 140116
Reviewed by: S.Beaumont
Date: 02/27/2017

ITEM #: 525.45

STRUCTURAL STEEL TO COMPLY W/ ASTM A6

TOLERANCE UNLESS OTHERWISE NOTED:
FRACTIONS = ± 1/16"
ANGLES = ± 1/2°
DIAMETERS = ± 1/32"

SHEET 2 OF 2

BRIDGE RAIL DETAILS SHEET

VT. ROUTE 2B (URBAN MINOR ARTERIAL) BRIDGE #6
TOWN OF ST. JOHNSBURY, CALEDONIA COUNTY, VT.

REV	NO.	DATE	DESCRIPTION	BY

REV	NO.	DATE	DESCRIPTION	BY

ELDERLEE, INC.
OAKS CORNERS, NEW YORK 14518
email:dlong@elderlee.com / epeck@elderlee.com
Tel:315-789-6670 Fax:315-789-6615

CERTIFIED FABRICATOR

ORTHOGRAPHIC PROJECTION

DRAWN	E.P.	2/15/17
CHECKED	D.L.	2/15/17
APPROVED	.	.
SCALE	SCHEMATIC	
DRAWING NO.	FRL-ST. JOHNSBURY (20)	

WELDING PROCEDURE SPECIFICATION

	PQR ELDERLEE # 3			
Material Specification	A36/A500GR.B/A53/A572GR.36/50/A709GR.36/50/A108 / A307/A325/A563/A449			
Welding Process	FCAW			
Manual or Machine	SEMAUTOMATIC			
Position of Welding	FLAT/HORIZONTAL			
Filler Metal Specification	A5.29			
Filler Metal Classification	E81T1-NI1C-JH4	LINCOLN ULTERCORE 81i1C-H		
Flux	N/A			
Shielding Gas	CO 2	Dew Point -40DEG F	Flow Rate 50CFH	
Single or Multiple Pass	SINGLE		(45 TO 63 CFH)	
Single or Multiple Arc	SINGLE			
Welding Current	DC			
Polarity	REVERSE	ELECTRODE POSITIVE	CTWD 3/4"	
Welding Progression	STRINGER			
Root Treatment	ROOT SHALL BE CLEAN AND FREE OF FOREIGN MATTER			
Preheat and Interpass Temperature	MIN PREHEAT 50 DEG ≤ 0.75" 70 DEG > 0.75" MAX INTERPASS 400 DEG			
Postheat Temperature	NONE			
Heat Input	Min 33.92		Max 50.42	

SHOP DRAWING REVIEW

☐ REVIEWED AS REQUIRED BY THE CONSTRUCTION CONTRACT DOCUMENTS AND APPROVED, BUT ONLY FOR CONFORMANCE TO THE DESIGN CONCEPT OF THE WORK, AND SUBJECT TO FURTHER LIMITATIONS AND REQUIREMENTS CONTAINED IN THE CONSTRUCTION CONTRACT DOCUMENTS.

☐ REJECTED ☐ REVISE AND RESUBMIT ☒ APPROVED AS NOTED

CORRECTIONS OR COMMENTS MADE ON THE SHOP DRAWINGS DURING THIS REVIEW DID NOT RELIEVE CONTRACTOR FROM COMPLIANCE WITH REQUIREMENTS OF THE DRAWINGS AND SPECIFICATIONS. THIS CHECK IS ONLY FOR REVIEW OF GENERAL CONFORMANCE WITH THE DESIGN CONCEPT OF THE PROJECT AND GENERAL COMPLIANCE WITH THE INFORMATION GIVEN IN THE CONTRACT DOCUMENTS. THE CONTRACTOR IS RESPONSIBLE FOR: CONFIRMING AND CORRELATING ALL QUANTITIES AND DIMENSIONS; SELECTING FABRICATION PROCESSES AND TECHNIQUES OF CONSTRUCTION; COORDINATING THEIR WORK WITH THAT OF ALL OTHER TRADES; AND PERFORMING THEIR WORK IN A SAFE AND SATISFACTORY MANNER.

CLD Consulting Engineers
540 Commercial Street
Manchester, NH 03101
603-668-8223

Job Number: 140116
Reviewed by: S.Beaumont
Date: 02/27/2017

Vermont Agency of Transportation

RECEIVED

CK'D BY CLD/RYAN OK'D BY WPELLETIER

February 27, 2017

RESUBMIT nO Approved AsNoted

BY WPELLETIER DATE 03/02/2017

WELDING PROCEDURE

Pass no.	Electrode size	Welding Current Amperes	Welding Current Volts	Travel speed	Joint detail
1	1/16	310	25	11	
		320 TO 285	26 TO 24	12.1 TO 9.9	

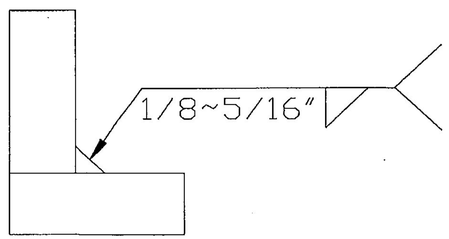

This procedure may vary due to fabrication sequence, fit-up, pass size, etc., within the limitation of variables given in Section 5.

Procedure No. 8000
Revision No. 1

Contractor Elderlee, Inc.
Authorized By RANDY SCOTT
Date 2/7/2017

Form III-2

WELDING PROCEDURE SPECIFICATION

PQR ELDERLEE #4

Material Specification	A36/A572 GR. 36 / 50 / A709 GR. 36 / 50			
Welding Process	GMAW			
Manual or Machine	SEMAUTOMATIC ROBOTIC			
Position of Welding	FLAT			
Filler Metal Specification	A5.18			
Filler Metal Classification	L-56 ER70S-6 LINCOLN			
Flux	N/A			
Shielding Gas	90% ARGON / 10% CO2	Dew Point	-40DEG F Flow Rate	45CFH
Single or Multiple Pass	SINGLE			
Single or Multiple Arc	SINGLE			
Welding Current	DC			
Polarity	REVERSE ELECTRODE POSITIVE		CTWD 3/4"	
Welding Progression	STRINGER			
Root Treatment	ROOT SHALL BE CLEAN AND FREE OF FOREIGN MATTER			
Preheat and Interpass Temperature	MIN PREHEAT 50 DEG ≤ 0.75" 70 DEG > 0.75" MAX INTERPASS 400 DEG			
Postheat Temperature	NONE			
Heat Input	Min 10.56		Max 15.84	

WELDING PROCEDURE

Pass no.	Electrode size	Welding Current Amperes	Welding Current Volts	Travel speed	Joint detail
1	.045	190	22	19	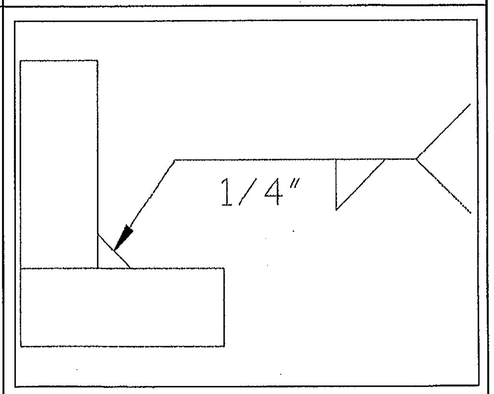
		171 TO 200	20 TO 23	18 TO 21	

This procedure may vary due to fabrication sequence, fit-up, pass size, etc., within the limitation of variables given in Section 5.

Procedure No. 8001
Revision No. 1

Contractor Elderlee, Inc.
Authorized By RANDY SCOTT
Date 2/7/2017

Form III-2

SHOP DRAWING REVIEW

☐ REVIEWED AS REQUIRED BY THE CONSTRUCTION CONTRACT DOCUMENTS AND APPROVED, BUT ONLY FOR CONFORMANCE TO THE DESIGN CONCEPT OF THE WORK, AND SUBJECT TO FURTHER LIMITATIONS AND REQUIREMENTS CONTAINED IN THE CONSTRUCTION CONTRACT DOCUMENTS.

☐ REJECTED ☐ REVISE AND RESUBMIT ☒ APPROVED AS NOTED

CORRECTIONS OR COMMENTS MADE ON THE SHOP DRAWINGS DURING THIS REVIEW DID NOT RELIEVE CONTRACTOR FROM COMPLIANCE WITH REQUIREMENTS OF THE DRAWINGS AND SPECIFICATIONS. THIS CHECK IS ONLY FOR REVIEW OF GENERAL CONFORMANCE WITH THE DESIGN CONCEPT OF THE PROJECT AND GENERAL COMPLIANCE WITH THE INFORMATION GIVEN IN THE CONTRACT DOCUMENTS. THE CONTRACTOR IS RESPONSIBLE FOR: CONFIRMING AND CORRELATING ALL QUANTITIES AND DIMENSIONS; SELECTING FABRICATION PROCESSES AND TECHNIQUES OF CONSTRUCTION; COORDINATING THEIR WORK WITH THAT OF ALL OTHER TRADES; AND PERFORMING THEIR WORK IN A SAFE AND SATISFACTORY MANNER.

CLD Consulting Engineers
540 Commercial Street
Manchester, NH 03101
603-668-8223

Job Number: 140116
Reviewed by: S.Beaumont
Date: 02/27/2017

Vermont Agency of Transportation

RECEIVED

CK'D BY CLD/RYAN OK'D BY WPELLETIER

February 27, 2017

RESUBMIT nO Approved AsNoted

BY WPELLETIER DATE 03/02/2017

WELDING PROCEDURE SPECIFICATION

	PQR ELDERLEE #3			
Material Specification	A36/A500GR.B/A53/A572GR.36/50/A709GR.36/50/A108			
Welding Process	FCAW			
Manual or Machine	SEMAUTOMATIC			
Position of Welding	FLAT			
Filler Metal Specification	A5.29			
Filler Metal Classification	E81T1-NI1C-JH4 LINCOLN ULTERCORE 81i1C-H			
Flux	N/A			
Shielding Gas	CO 2	Dew Point -40DEG F	Flow Rate 50CFH	(45 TO 63 CFH)
Single or Multiple Pass	SINGLE			
Single or Multiple Arc	SINGLE			
Welding Current	DC			
Polarity	REVERSE ELECTRODE POSITIVE	CTWD 3/4"		
Welding Progression	STRINGER			
Root Treatment	ROOT SHALL BE CLEAN AND FREE OF FOREIGN MATTER			
Preheat and Interpass Temperature	MIN PREHEAT 50 DEG ≤ 0.75" 70 DEG > 0.75" MAX INTERPASS 400 DEG			
Postheat Temperature	NONE			
Heat Input	Min 33.92	Max 50.42		

WELDING PROCEDURE

Pass no.	Electrode size	Welding Current Amperes	Welding Current Volts	Travel speed	Joint detail
1	1/16	310	25	11	
		320 TO 285	26 TO 24	12.1 TO 9.9	

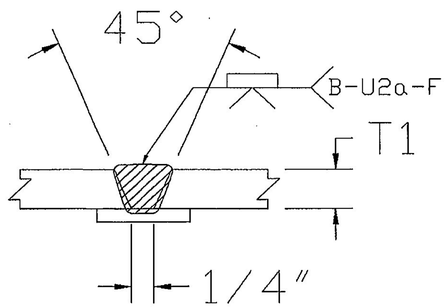

This procedure may vary due to fabrication sequence, fit-up, pass size, etc., within the limitation of variables given in Section 5.

Procedure No. 8005
Revision No. 1

Contractor Elderlee, Inc.
Authorized By RANDY SCOTT
Date 2/7/2017

Form III-2

SHOP DRAWING REVIEW

☐ REVIEWED AS REQUIRED BY THE CONSTRUCTION CONTRACT DOCUMENTS AND APPROVED, BUT ONLY FOR CONFORMANCE TO THE DESIGN CONCEPT OF THE WORK, AND SUBJECT TO FURTHER LIMITATIONS AND REQUIREMENTS CONTAINED IN THE CONSTRUCTION CONTRACT DOCUMENTS.

☐ REJECTED ☐ REVISE AND RESUBMIT ☒ APPROVED AS NOTED

CORRECTIONS OR COMMENTS MADE ON THE SHOP DRAWINGS DURING THIS REVIEW DID NOT RELIEVE CONTRACTOR FROM COMPLIANCE WITH REQUIREMENTS OF THE DRAWINGS AND SPECIFICATIONS. THIS CHECK IS ONLY FOR REVIEW OF GENERAL CONFORMANCE WITH THE DESIGN CONCEPT OF THE PROJECT AND GENERAL COMPLIANCE WITH THE INFORMATION GIVEN IN THE CONTRACT DOCUMENTS. THE CONTRACTOR IS RESPONSIBLE FOR: CONFIRMING AND CORRELATING ALL QUANTITIES AND DIMENSIONS; SELECTING FABRICATION PROCESSES AND TECHNIQUES OF CONSTRUCTION; COORDINATING THEIR WORK WITH THAT OF ALL OTHER TRADES; AND PERFORMING THEIR WORK IN A SAFE AND SATISFACTORY MANNER.

CLD Consulting Engineers
540 Commercial Street
Manchester, NH 03101
603-668-8223

Job Number: 140116
Reviewed by: S.Beaumont
Date: 02/27/2017

Vermont Agency of Transportation

RECEIVED

CK'D BY CLD/RYAN OK'D BY WPELLETIER

February 27, 2017

RESUBMIT nO Approved AsNoted

BY WPELLETIER DATE 03/02/2017

PO Box 508
Barton, VT 05822
Phone: (802)525-9506
Fax: (802)525-4616
www.jpsicard.com

Submittal Data Sheet

Submittal #: 8

Submission #: 1

Date: 2/16/17

Project Name: St. Johnsbury BF 7000 (20)

Owner: State of Vermont Agency of Transportation

Division:

Contractor: J.P. Sicard Inc.

Item Number: 621.72

Supplier: Lafayette Highway Specialties

Description of Item: Guardrail Approach Section

Subsitution: NO

Engineers Review Comments:

Vermont Agency of Transportation
RECEIVED
CK'D BY CLD/RYAN OK'D BY WPELLETIER
February 27, 2017
RESUBMIT nO Approved AsNoted
BY WPELLETIER DATE 03/02/2017

Submitted By: Pat Uhsmann
Title: Project Manager
Company: JP Sicard Inc

Mr. Jim Lacroix,

I am preparing to submit drawings for St Johnsbury BF 7000(20) but I would like to check a few details first.

Ref . the following table for similarities / differences between existing jobs.

Job	Height @ wall	Dist. from anchor plate to center of first slot	Dist. from end of rail to first hole	Length of fill plate
Chelsea (09)	2'-10"	4 1/2"	Not specified	17"
Chelsea (10)	2'-10"	4 1/2	Not specified	17"
Ludlow	2'-10"	4 1/2	2 1/2"	17"
St. Johnsbury (20)	3'-0"	6 1/2"	4"	16"

Are all these changes intended?

Also: Sheet 49 (of 70), Railing angle shows 3/8" / ft for top rail & 1/8" / ft. for bottom rail. I come up with 1/4" / ft. for the top rail and 1/16" / ft for the bottom rail -see accompanying sheet (This brings to question the 3'-0" height at the wall)

Sheet 50. Dimension to the center of the 7"slots, shown as 2 3/4", should be 2 11/16".

Sheet 51. This is calling for a bent splice tube. The other jobs utilize a straight splice tube (which works fine) and they have a greater angle due to their shorter length. A straight splice tube will work for this application and was what was quoted.

Thank you,

Eugene Peek

Eugene Peek

From: Lacroix, James <James.Lacroix@vermont.gov>
Sent: Tuesday, February 14, 2017 1:46 PM
To: Eugene Peek
Cc: Douglas Ford; Michael Vail; Dan Long
Subject: RE: St Johnsbury, BF 7000(20)

Hi Eugene,

Sorry for the delay on this. I was out yesterday and have been trying to catch up. Please proceed with shop drawings using the dimensions from Chelsea and Ludlow. In regards to your other questions:

1) Proceed with your calculations for rail slope
2) Proceed with your calculation of this dimension
3) Proceed with straight splice tubes

I have confirmed this with the consultant and they will review the drawings with these changes in mind.

Let me know if you have additional questions or concerns.

Jim

From: Eugene Peek [mailto:epeek@elderlee.com]
Sent: Monday, February 13, 2017 11:25 AM
To: Lacroix, James <James.Lacroix@vermont.gov>
Cc: Douglas Ford <dford@lhsvt.com>; Michael Vail <mvail@elderlee.com>; Dan Long <dlong@elderlee.com>
Subject: St Johnsbury, BF 7000(20)

Mr, James Lacroix,

Please see attached.

Thank you,

Eugene Peek

Elderlee, Inc.
729 Cross Road
Oaks Corners, NY 14518

1-800-344-5917
P: (315) 789-6670
F: (315) 789-6615
epeek@elderlee.com
www.elderlee.com
Quality – Service – Integrity – Safety

CONFIDENTIALITY NOTICE: This email, including any attachments, may contain confidential, copyrighted, and legally privileged information that is intended only for the use of the named recipient(s). If you are not the intended recipient, the reading, copying, forwarding, disclosure or other use of the contents of this email is strictly prohibited. If you have received this message in error, please notify the sender immediately by reply email and delete and/or destroy this email, any attachments, and electronic or physical copies thereof. Thank you.

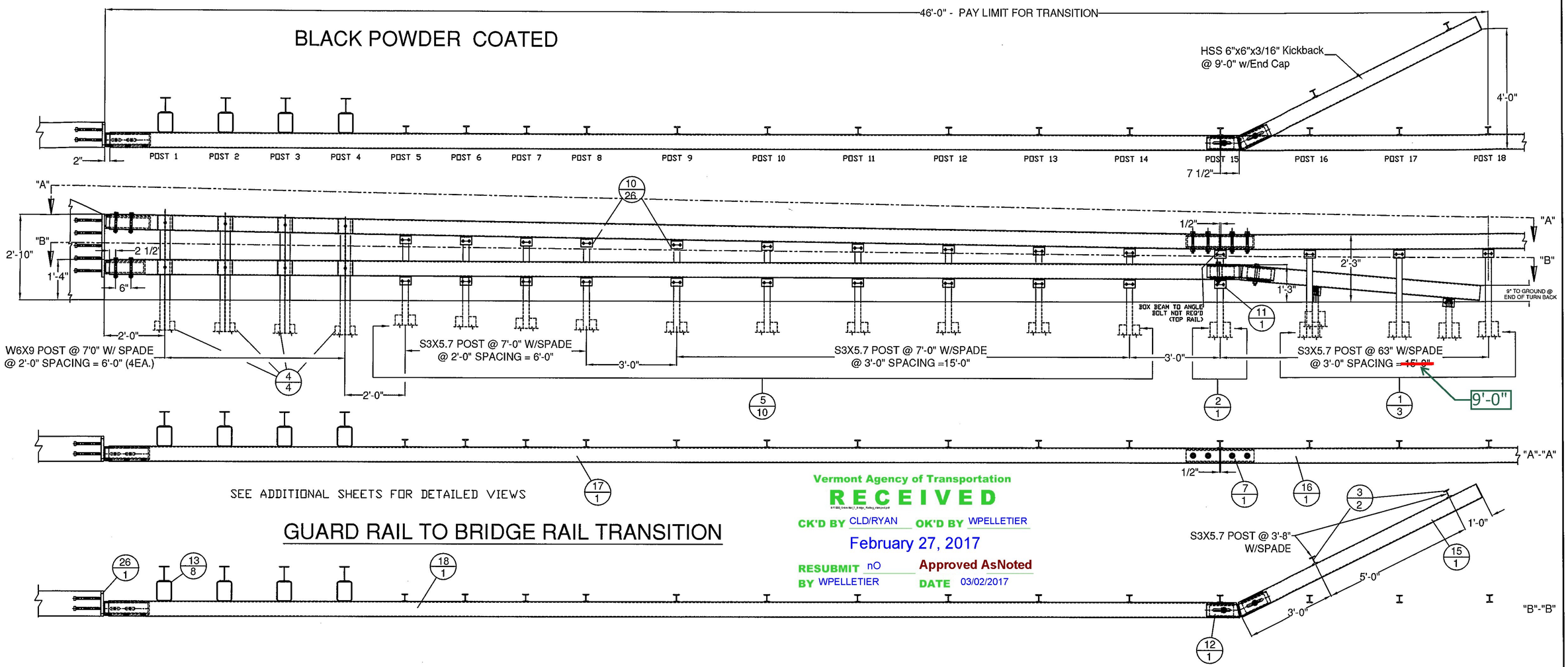

GUARD RAIL TO BRIDGE RAIL TRANSITION

Vermont Agency of Transportation

RECEIVED

CK'D BY CLD/RYAN OK'D BY WPELLETIER

February 27, 2017

RESUBMIT nO Approved AsNoted

BY WPELLETIER DATE 03/02/2017

BILL OF MATERIALS, (PER CORNER) (2 NORTH & 2 SOUTH REQ'D)

ITEM #	QTY.	COMPONENT #	DESCRIPTION	MATERIAL (ASTM)
1	3	0013.57021	3' I-POST, PUNCH 8' W/SPD @ 63' LG	ASTM A572 Gr. 50
2	1	0013.57025	3' I-POST, PUNCH 8', & 20' W/SPD @ 63' LG	ASTM A572 Gr. 50
3	2	0013.57060	3' I-END POST W/SPD @ 3'-8" LG	ASTM A572 Gr. 50
4	4	-	W6X9 POST @ 7' W/SPD & 5/8" HOLES @ VARIOUS	ASTM A572 Gr. 50
5	10	-	3' I-POST, PUNCH 8' & VARIOUS', W/8X32" SPADE @ 7'-0"	ASTM A572 Gr. 50
7	1	0033.00640	HSS 5X5 TUBE SPLICE @ 27" LG W/ 1/4" SHIMS	A500 Gr. B / A572 Gr 50
10	26	0054.00050	REG BB SHELF ANGLES @ 4-1/2"	ASTM A36
11	1	0054.00051	SPECIAL BB SHELF ANGLES @ 4-1/2"	ASTM A36
12	1	0054.00074	HSS 5X5 DBL BEND TUBE SPL @ 27" LG & 26° ANGLE	A500 Gr. B / A572 Gr 50
13	8	0054.00583	6X8x1/4" TRANS. TUBE B/O @ 6" LG	A500 Gr. B
15	1	0054.09000	6X6" BB @ 9'-0" KICKBACK, W/ CAP & 13° ANGLE	A500 Gr. B / A36
16	1	0054.00009	6X6" BB @ 9'-0", DRILL 3" CC (INCLUDED W' GUARDRAIL)	A500 Gr. B
17N	1	-	6X6" BB TOP TRANS @ 36'-9 3/4" LG, W/ 366' CONVEX RAD.	A500 Gr. B
17S	1	-	6X6" BB TOP TRANS @ 36'-9 3/4" LG, W/ 394' CONCAVE RAD.	A500 Gr. B
18N	1	-	6X6" BB BTM TRANS @ 37'-5" LG, W/ 366' CONVEX RAD.	A500 Gr. B
18S	1	-	6X6" BB BTM TRANS @ 37'-5" LG, W/ 394' CONCAVE RAD.	A500 Gr. B
19	26	0080.03355	3/8" X 7 1/2" BOLT, NUT, & 2 FW	A307, A563, F436
20	27	0080.04100	1/2" x 1-1/2" BOLT, NUT, & FW	A307, A563, F436
21	16	0080.04120	1/2" x 1-1/2" BOLT, NUT, 2 FW & LW	A307, A563, F436
23	10	0080.06340	3/4" X 7-1/2" BOLT, NUT, 2 FW	A325, A563, F436
24	8	0080.06370	3/4" X 8" CARR BOLT, NUT, FW & LW	A307, A563, F436
25	1	0080.06400	3/4" X 8" BOLT, NUT, 2 FW, & LW	A325
26	-	-	PARAPET WALL CONNECTIONS, LEFT / RIGHT	INCLUDED W/PAY ITEM #900.640

SHOP DRAWING REVIEW

☐ REVIEWED AS REQUIRED BY THE CONSTRUCTION CONTRACT DOCUMENTS AND APPROVED, BUT ONLY FOR CONFORMANCE TO THE DESIGN CONCEPT OF THE WORK, AND SUBJECT TO FURTHER LIMITATIONS AND REQUIREMENTS CONTAINED IN THE CONSTRUCTION CONTRACT DOCUMENTS.

☐ REJECTED ☐ REVISE AND RESUBMIT ☒ APPROVED AS NOTED

CORRECTIONS OR COMMENTS MADE ON THE SHOP DRAWINGS DURING THIS REVIEW DID NOT RELIEVE CONTRACTOR FROM COMPLIANCE WITH REQUIREMENTS OF THE DRAWINGS AND SPECIFICATIONS. THIS CHECK IS ONLY FOR REVIEW OF GENERAL CONFORMANCE WITH THE DESIGN CONCEPT OF THE PROJECT AND GENERAL COMPLIANCE WITH THE INFORMATION GIVEN IN THE CONTRACT DOCUMENTS. THE CONTRACTOR IS RESPONSIBLE FOR: CONFIRMING AND CORRELATING ALL QUANTITIES AND DIMENSIONS; SELECTING FABRICATION PROCESSES AND TECHNIQUES OF CONSTRUCTION; COORDINATING THEIR WORK WITH THAT OF ALL OTHER TRADES; AND PERFORMING THEIR WORK IN A SAFE AND SATISFACTORY MANNER.

CLD Consulting Engineers
540 Commercial Street
Manchester, NH 03101
603-668-8223

Job Number: 140116
Reviewed by: S.Beaumont
Date: 02/27/2017

HARDWARE NOTES

ITEM #	FUNCTION
19	BOLT RAIL TO SHELF ANGLE (ITEM #10)
20	BOLT SHELF ANGLE (ITEM # 10) TO POST (ITEM #'S 1, 2, 3, & 5)
21	BOLT BLOCK-OUTS (ITEM # 13) TO HEAVY POST (ITEM #4)
23	SPLICE TUBING (ITEM #'S 7 & 12), & (4) PER PARAPET WALL CONNECTION (ITEM #26)
24	BOLT RAIL (ITEMS #'S 17, & 18 TO BLOCK-OUTS (ITEM #13)
25	BOLT RAIL (ITEM #18) & DOUBLE BEND SPLICE (ITEM #12) TO SHELF ANGLE (ITEM #11)

GENERAL NOTES:

1) ALL RAILING IS TO BE FABRICATED AND ERECTED ACCORDING TO SECTION 621 OF THE STANDARD SPECIFICATIONS.
2) BOLTS SHALL BE TORQUED SNUG TIGHT (APPROXIMATELY 100 FT-LB).
3) PROTRUSIONS CAUSED BY WELDING OR GALVANIZING ARE NOT PERMITTED ON THE ADJOINING SURFACES OF THE BOX BEAM RAILS, SPLICE TUBES AND FILL PLATES.
4) ANY BENDING OF RAIL SHALL BE DONE AT THE FABRICATION PLANT. RADII GREATER THAN 16' TO BE CURVED ON A TUBE BENDING MACHINE, RADII LESS THAN 16' TO BE "PIE CUT" AND WELDED. CURVED RAILING WILL HAVE AN 18" LENGTH ON EACH END STRAIGHT TO ACCOMMODATE SPLICES. "PIE CUTS ARE LOCATED SO AS TO NOT CONFLICT WITH POST FASTENING HOLES. PIE CUTS WILL BE WELDED ACCORDING TO PROCEDURE WPS-3026.
5) STEEL COMPONENTS TO BE POWDER COATED BLACK 27038 PER FEDERAL STANDARD NO 595, & PER ASTM D7803 FOLLOWING GALVANIZING.

ITEM #: 621.72

STRUCTURAL STEEL TO COMPLY W/ ASTM A6

TOLERANCE UNLESS OTHERWISE NOTED:
FRACTIONS = ± 1/16"
ANGLES = ± 1/2°
DIAMETERS = ± 1/32"

SHEET 1 OF 4

TRANSITION - CONCRETE PARAPET TO HIGHWAY GUIDE RAIL

VT. ROUTE 2B (URBAN MINOR ARTERIAL) BRIDGE #6
TOWN OF ST. JOHNSBURY, CALEDONIA COUNTY, VT.

R E V	NO.	DATE	DESCRIPTION	BY

R E V	NO.	DATE	DESCRIPTION	BY

ELDERLEE, INC.
OAKS CORNERS, NEW YORK 14518
email: dlong@elderlee.com / epeek@elderlee.com
Tel: 315-789-6670 Fax: 315-789-6615

AISC CERTIFIED FABRICATOR

ORTHOGRAPHIC PROJECTION

DRAWN	E.P.	2/15/17
CHECKED	D.L.	2/15/17
APPROVED	.	.
SCALE	SCHEMATIC	
DRAWING NO.	FRL-ST. JOHNSBURY (20)	

PLAN VIEW

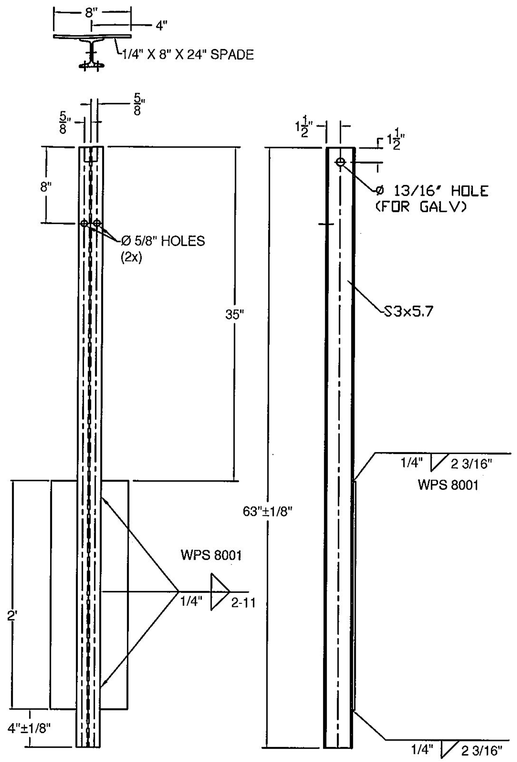

(ITEM # 1)

PLAN VIEW

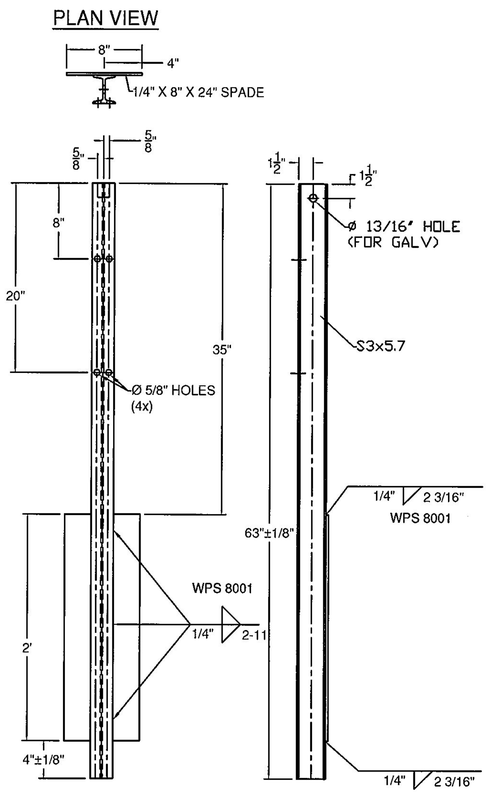

(ITEM # 2)

PLAN VIEW

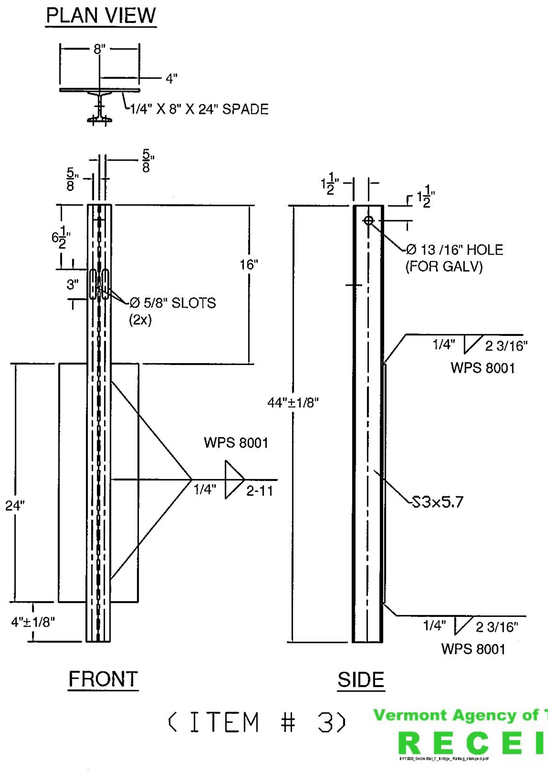

(ITEM # 3)

PLAN VIEW

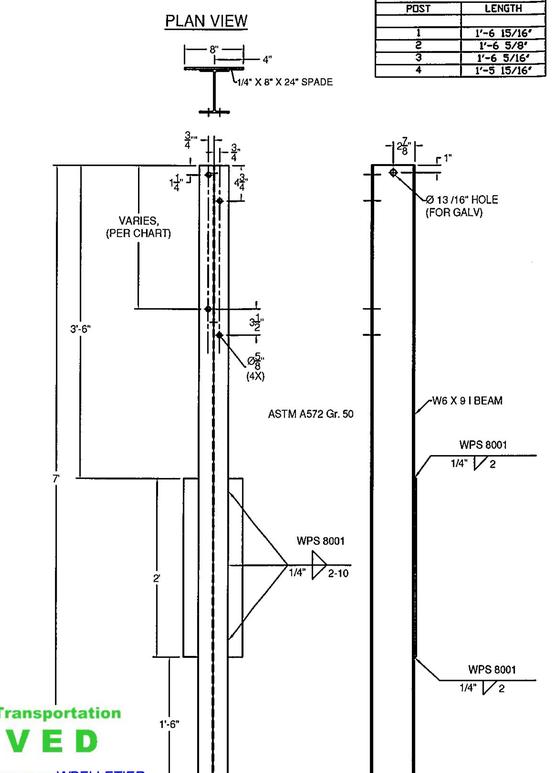

HOLE POSITION CHART	
POST	LENGTH
1	1'-6 15/16"
2	1'-6 5/8"
3	1'-6 5/16"
4	1'-5 15/16"

(ITEM # 4)

SHOP DRAWING REVIEW

☐ REVIEWED AS REQUIRED BY THE CONSTRUCTION CONTRACT DOCUMENTS AND APPROVED, BUT ONLY FOR CONFORMANCE TO THE DESIGN CONCEPT OF THE WORK, AND SUBJECT TO FURTHER LIMITATIONS AND REQUIREMENTS CONTAINED IN THE CONSTRUCTION CONTRACT DOCUMENTS.

☐ REJECTED ☐ REVISE AND RESUBMIT ☒ APPROVED AS NOTED

CORRECTIONS OR COMMENTS MADE ON THE SHOP DRAWINGS DURING THIS REVIEW DID NOT RELIEVE CONTRACTOR FROM COMPLIANCE WITH REQUIREMENTS OF THE DRAWINGS AND SPECIFICATIONS. THIS CHECK IS ONLY FOR REVIEW OF GENERAL CONFORMANCE WITH THE DESIGN CONCEPT OF THE PROJECT AND GENERAL COMPLIANCE WITH THE INFORMATION GIVEN IN THE CONTRACT DOCUMENTS. THE CONTRACTOR IS RESPONSIBLE FOR: CONFIRMING AND CORRELATING ALL QUANTITIES AND DIMENSIONS; SELECTING FABRICATION PROCESSES AND TECHNIQUES OF CONSTRUCTION; COORDINATING THEIR WORK WITH THAT OF ALL OTHER TRADES; AND PERFORMING THEIR WORK IN A SAFE AND SATISFACTORY MANNER.

CLD Consulting Engineers
540 Commercial Street
Manchester, NH 03101
603-668-8223

Job Number: 140116
Reviewed by: S.Beaumont
Date: 02/27/2017

Vermont Agency of Transportation
RECEIVED
CK'D BY CLD/RYAN OK'D BY WPELLETIER
February 27, 2017
RESUBMIT nO Approved AsNoted
BY WPELLETIER DATE 03/02/2017

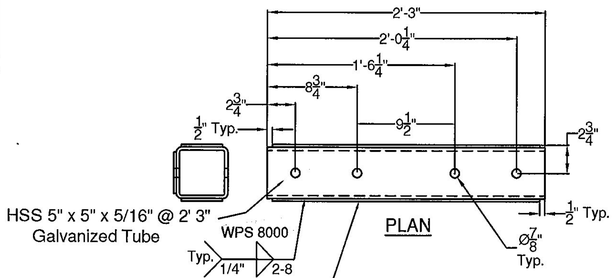

(ITEM # 7)

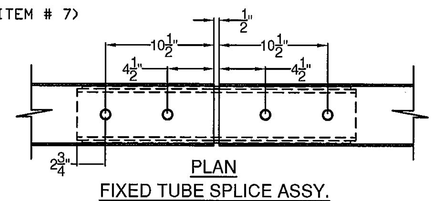

SPLICE TUBE - FIXED

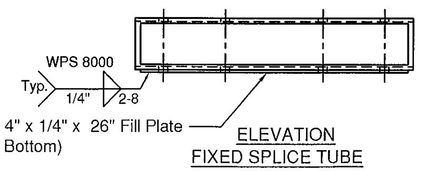

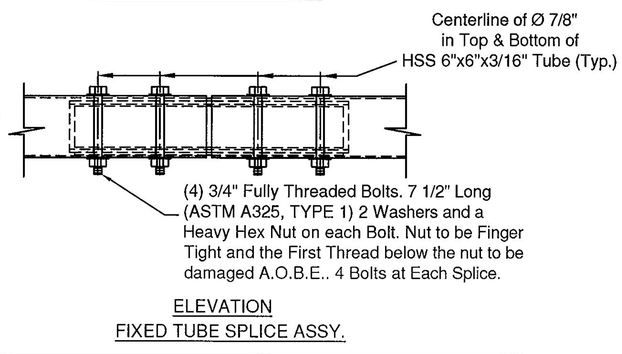

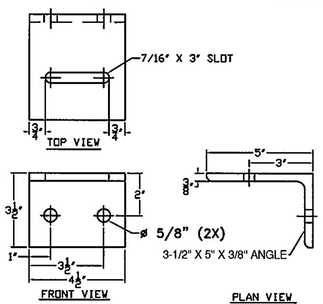

(ITEM # 10)

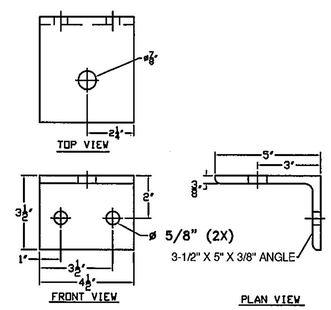

(ITEM # 11)

ITEM #: 621.72

STRUCTURAL STEEL TO COMPLY W/ ASTM A6

TOLERANCE UNLESS OTHERWISE NOTED:
FRACTIONS = ± 1/16"
ANGLES = ± 1/2°
DIAMETERS = ± 1/32"

TRANSITION - CONCRETE PARAPET TO HIGHWAY GUIDE RAIL

VT. ROUTE 2B (URBAN MINOR ARTERIAL) BRIDGE #6
TOWN OF ST. JOHNSBURY, CALEDONIA COUNTY, VT.

R E V	NO.	DATE	DESCRIPTION	BY	R E V	NO.	DATE	DESCRIPTION	BY

ELDERLEE, INC.
OAKS CORNERS, NEW YORK 14518
email: dlong@elderlee.com / epeek@elderlee.com
Tel: 315-789-6670 Fax: 315-789-6615

CERTIFIED FABRICATOR

ORTHOGRAPHIC PROJECTION

DRAWN	E.P.	2/15/17
CHECKED	D.L.	2/15/17
APPROVED	.	.
SCALE	SCHEMATIC	
DRAWING NO.	FRL-ST. JOHNSBURY (20)	

HOLE POSITION CHART	
POST	LENGTH
5	2'-0 3/8"
6	2'-0 1/16"
7	1'-11 3/4"
8	1'-11 3/8"
9	1'-10 15/16"
10	1'-10 7/16"
11	1'-9 15/16"
12	1'-9 7/16"
13	1'-8 15/16"
14	1'-8 1/2"

PLAN VIEW

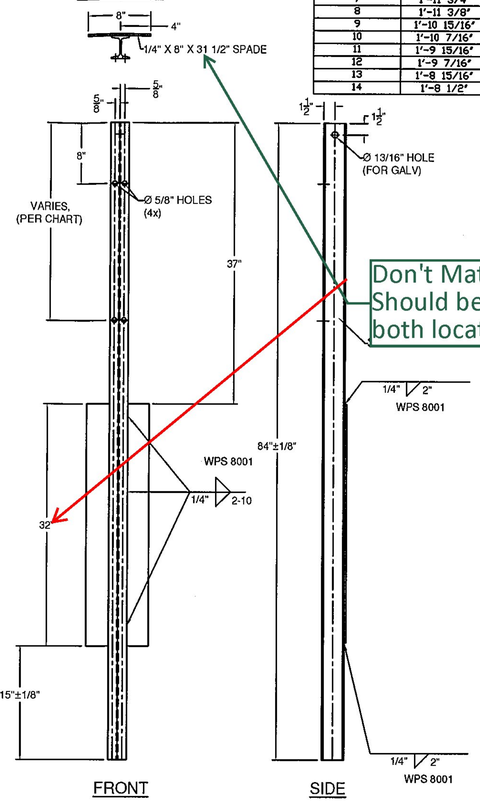

FRONT SIDE

(ITEM # 5)

BACK VIEW HSS 6X6X3/16"

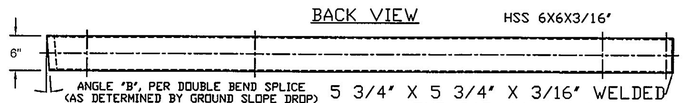

TOP VIEW

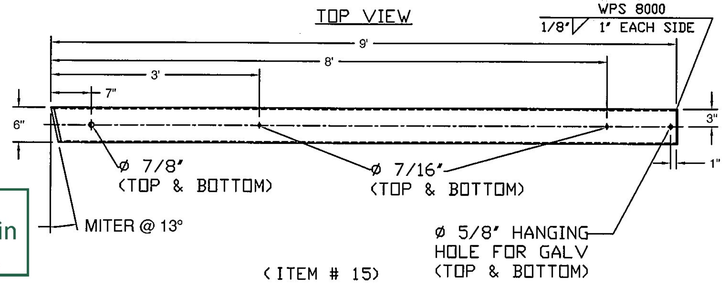

(ITEM # 15)

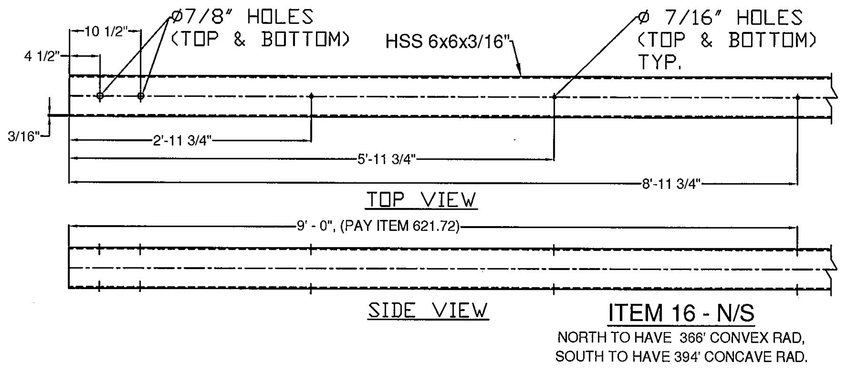

TOP VIEW

SIDE VIEW

ITEM 16 - N/S

NORTH TO HAVE 366' CONVEX RAD,
SOUTH TO HAVE 394' CONCAVE RAD.

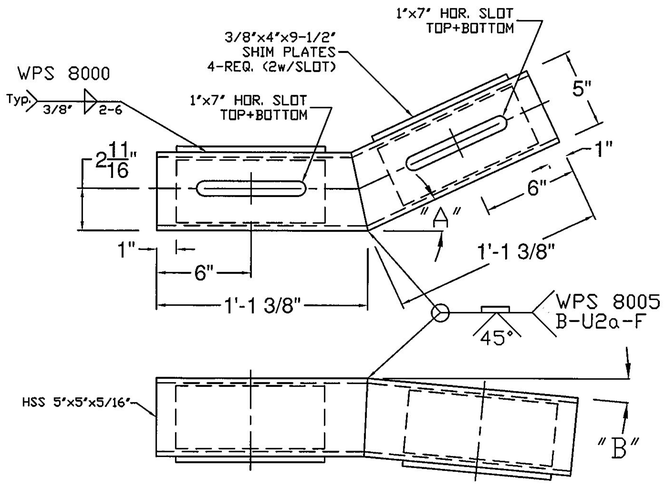

"A" - SEE PLAN FOR TURN BACK DISTANCE, SET ANGLE ACCORDINGLY.
"B" - TURN DOWN ANGLE SET BY THE 9' MEASUREMENT AT THE END OF THE BOX BEAM.

(ITEM # 12)

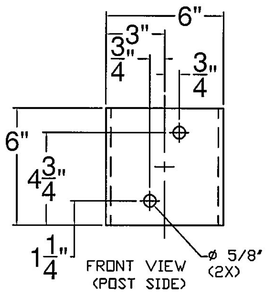

BACK VIEW (RAIL SIDE)

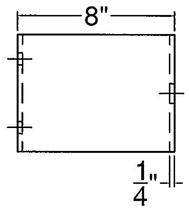

(ITEM # 13)

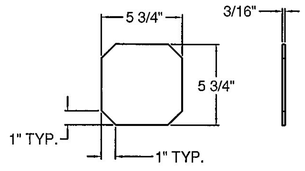

6" X 6" KICKBACK ENDCAP DETAIL

SHOP DRAWING REVIEW

☐ REVIEWED AS REQUIRED BY THE CONSTRUCTION CONTRACT DOCUMENTS AND APPROVED, BUT ONLY FOR CONFORMANCE TO THE DESIGN CONCEPT OF THE WORK, AND SUBJECT TO FURTHER LIMITATIONS AND REQUIREMENTS CONTAINED IN THE CONSTRUCTION CONTRACT DOCUMENTS.

☐ REJECTED ☐ REVISE AND RESUBMIT ☒ APPROVED AS NOTED

CORRECTIONS OR COMMENTS MADE ON THE SHOP DRAWINGS DURING THIS REVIEW DID NOT RELIEVE CONTRACTOR FROM COMPLIANCE WITH REQUIREMENTS OF THE DRAWINGS AND SPECIFICATIONS. THIS CHECK IS ONLY FOR REVIEW OF GENERAL CONFORMANCE WITH THE DESIGN CONCEPT OF THE PROJECT AND GENERAL COMPLIANCE WITH THE INFORMATION GIVEN IN THE CONTRACT DOCUMENTS. THE CONTRACTOR IS RESPONSIBLE FOR: CONFIRMING AND CORRELATING ALL QUANTITIES AND DIMENSIONS; SELECTING FABRICATION PROCESSES AND TECHNIQUES OF CONSTRUCTION; COORDINATING THEIR WORK WITH THAT OF ALL OTHER TRADES; AND PERFORMING THEIR WORK IN A SAFE AND SATISFACTORY MANNER.

CLD Consulting Engineers
540 Commercial Street
Manchester, NH 03101
603-668-8223

Job Number: 140116
Reviewed by: S.Beaumont
Date: 02/27/2017

Vermont Agency of Transportation

RECEIVED

CK'D BY CLD/RYAN OK'D BY WPELLETIER

February 27, 2017

RESUBMIT nO Approved AsNoted

BY WPELLETIER DATE 03/02/2017

ITEM #: 621.72

SHEET 3 OF 4

STRUCTURAL STEEL TO COMPLY W/ ASTM A6

TOLERANCE UNLESS OTHERWISE NOTED:
FRACTIONS = ± 1/16"
ANGLES = ± 1/2°
DIAMETERS = ± 1/32"

TRANSITION - CONCRETE PARAPET TO HIGHWAY GUIDE RAIL

VT. ROUTE 2B (URBAN MINOR ARTERIAL) BRIDGE #6
TOWN OF ST. JOHNSBURY, CALEDONIA COUNTY, VT.

R E V	NO.	DATE	DESCRIPTION	BY	R E V	NO.	DATE	DESCRIPTION	BY

ELDERLEE, INC.
OAKS CORNERS, NEW YORK 14518
email: dlong@elderlee.com / epeek@elderlee.com
Tel: 315-789-6670 Fax: 315-789-6615

AISC CERTIFIED FABRICATOR

ORTHOGRAPHIC PROJECTION

DRAWN	E.P.	2/15/17
CHECKED	D.L.	2/15/17
APPROVED	.	.
SCALE	SCHEMATIC	
DRAWING NO.	FRL-ST. JOHNSBURY (20)	

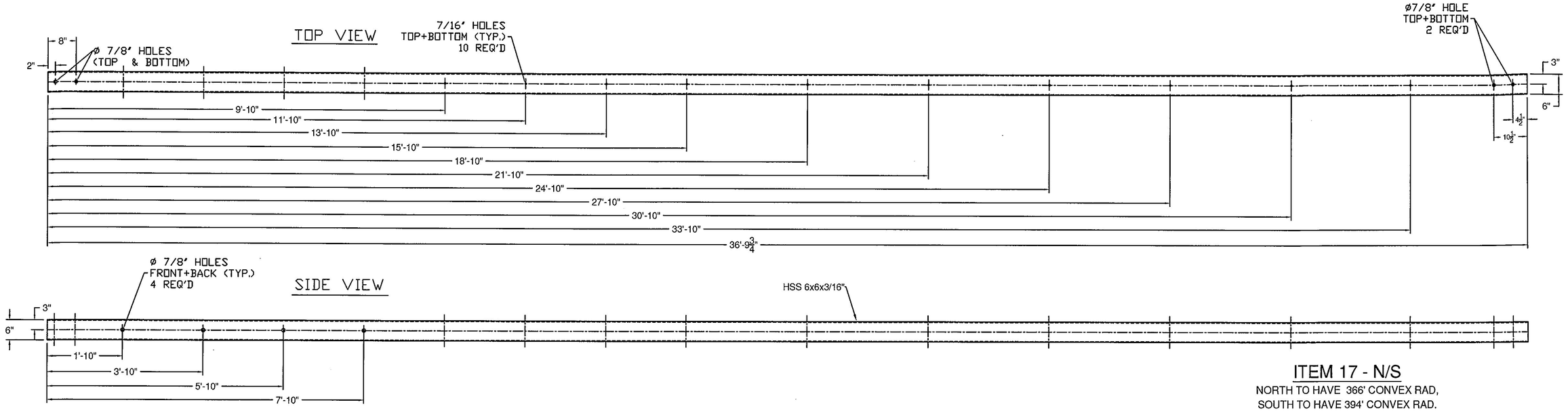

ITEM 17 - N/S

NORTH TO HAVE 366' CONVEX RAD,
SOUTH TO HAVE 394' CONVEX RAD.

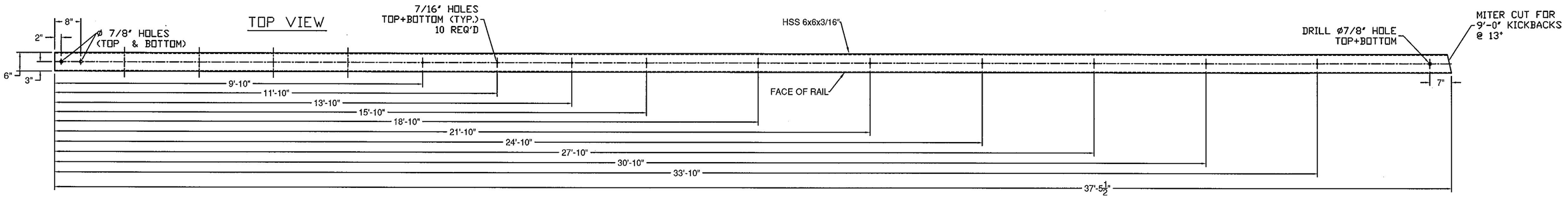

ITEM 18 - N/S

NORTH TO HAVE 366' CONVEX RAD,
SOUTH TO HAVE 394' CONVEX RAD.

SHOP DRAWING REVIEW

☐ REVIEWED AS REQUIRED BY THE CONSTRUCTION CONTRACT DOCUMENTS AND APPROVED, BUT ONLY FOR CONFORMANCE TO THE DESIGN CONCEPT OF THE WORK, AND SUBJECT TO FURTHER LIMITATIONS AND REQUIREMENTS CONTAINED IN THE CONSTRUCTION CONTRACT DOCUMENTS.

☐ REJECTED ☐ REVISE AND RESUBMIT ☒ APPROVED AS NOTED

CORRECTIONS OR COMMENTS MADE ON THE SHOP DRAWINGS DURING THIS REVIEW DID NOT RELIEVE CONTRACTOR FROM COMPLIANCE WITH REQUIREMENTS OF THE DRAWINGS AND SPECIFICATIONS. THIS CHECK IS ONLY FOR REVIEW OF GENERAL CONFORMANCE WITH THE DESIGN CONCEPT OF THE PROJECT AND GENERAL COMPLIANCE WITH THE INFORMATION GIVEN IN THE CONTRACT DOCUMENTS. THE CONTRACTOR IS RESPONSIBLE FOR: CONFIRMING AND CORRELATING ALL QUANTITIES AND DIMENSIONS; SELECTING FABRICATION PROCESSES AND TECHNIQUES OF CONSTRUCTION; COORDINATING THEIR WORK WITH THAT OF ALL OTHER TRADES; AND PERFORMING THEIR WORK IN A SAFE AND SATISFACTORY MANNER.

CLD Consulting Engineers
540 Commercial Street
Manchester, NH 03101
603-668-8223

Job Number: 140116
Reviewed by: S.Beaumont
Date: 02/27/2017

Vermont Agency of Transportation

RECEIVED

CK'D BY CLD/RYAN OK'D BY WPELLETIER

February 27, 2017

RESUBMIT nO Approved AsNoted

BY WPELLETIER DATE 03/02/2017

ITEM #: 621.72

STRUCTURAL STEEL TO COMPLY W/ ASTM A6

TOLERANCE UNLESS OTHERWISE NOTED:
FRACTIONS = ± 1/16"
ANGLES = ± 1/2°
DIAMETERS = ± 1/32"

SHEET 4 OF 4

TRANSITION - CONCRETE PARAPET TO HIGHWAY GUIDE RAIL

VT. ROUTE 2B (URBAN MINOR ARTERIAL) BRIDGE #6
TOWN OF ST. JOHNSBURY, CALEDONIA COUNTY, VT.

R E V	NO.	DATE	DESCRIPTION	BY

R E V	NO.	DATE	DESCRIPTION	BY

ELDERLEE, INC.
OAKS CORNERS, NEW YORK 14518
email: dlong@elderlee.com / epeek@elderlee.com
Tel: 315-789-6670 Fax: 315-789-6615

AISC CERTIFIED FABRICATOR

ORTHOGRAPHIC PROJECTION

DRAWN	E.P.	2/15/17
CHECKED	D.L.	2/15/17
APPROVED	.	.
SCALE	SCHEMATIC	
DRAWING NO.	FRL-ST. JOHNSBURY (20)	

WELDING PROCEDURE SPECIFICATION

PQR ELDERLEE # 3

Material Specification	A36/A500GR.B/A53/A572GR.36/50/A709GR.36/50/A108 / A307/A325/A563/A449
Welding Process	FCAW
Manual or Machine	SEMAUTOMATIC
Position of Welding	FLAT/HORIZONTAL
Filler Metal Specification	A5.29
Filler Metal Classification	E81T1-NI1C-JH4 LINCOLN ULTERCORE 81i1C-H
Flux	N/A
Shielding Gas	CO 2 Dew Point -40DEG F Flow Rate 50CFH (45 TO 63 CFH)
Single or Multiple Pass	SINGLE
Single or Multiple Arc	SINGLE
Welding Current	DC
Polarity	REVERSE ELECTRODE POSITIVE CTWD 3/4"
Welding Progression	STRINGER
Root Treatment	ROOT SHALL BE CLEAN AND FREE OF FOREIGN MATTER
Preheat and Interpass Temperature	MIN PREHEAT 50 DEG ≤ 0.75" 70 DEG > 0.75" MAX INTERPASS 400 DEG
Postheat Temperature	NONE
Heat Input	Min 33.92 Max 50.42

WELDING PROCEDURE

Pass no.	Electrode size	Welding Current		Travel speed	Joint detail
		Amperes	Volts		
1	1/16	310	25	11	
		320 TO 285	26 TO 24	12.1 TO 9.9	

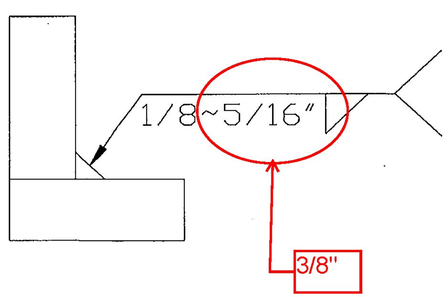

This procedure may vary due to fabrication sequence, fit-up, pass size, etc., within the limitation of variables given in Section 5.

Procedure No. 8000
Revision No. 1

Contractor Elderlee, Inc.
Authorized By RANDY SCOTT
Date 2/7/2017

Form III-2

SHOP DRAWING REVIEW

☐ REVIEWED AS REQUIRED BY THE CONSTRUCTION CONTRACT DOCUMENTS AND APPROVED, BUT ONLY FOR CONFORMANCE TO THE DESIGN CONCEPT OF THE WORK, AND SUBJECT TO FURTHER LIMITATIONS AND REQUIREMENTS CONTAINED IN THE CONSTRUCTION CONTRACT DOCUMENTS.

☐ REJECTED ☐ REVISE AND RESUBMIT ☒ APPROVED AS NOTED

CORRECTIONS OR COMMENTS MADE ON THE SHOP DRAWINGS DURING THIS REVIEW DID NOT RELIEVE CONTRACTOR FROM COMPLIANCE WITH REQUIREMENTS OF THE DRAWINGS AND SPECIFICATIONS. THIS CHECK IS ONLY FOR REVIEW OF GENERAL CONFORMANCE WITH THE DESIGN CONCEPT OF THE PROJECT AND GENERAL COMPLIANCE WITH THE INFORMATION GIVEN IN THE CONTRACT DOCUMENTS. THE CONTRACTOR IS RESPONSIBLE FOR: CONFIRMING AND CORRELATING ALL QUANTITIES AND DIMENSIONS; SELECTING FABRICATION PROCESSES AND TECHNIQUES OF CONSTRUCTION; COORDINATING THEIR WORK WITH THAT OF ALL OTHER TRADES; AND PERFORMING THEIR WORK IN A SAFE AND SATISFACTORY MANNER.

CLD Consulting Engineers
540 Commercial Street
Manchester, NH 03101
603-668-8223

Job Number: 140116
Reviewed by: S.Beaumont
Date: 02/27/2017

Vermont Agency of Transportation

RECEIVED

CK'D BY CLD/RYAN OK'D BY WPELLETIER

February 27, 2017

RESUBMIT nO Approved AsNoted

BY WPELLETIER DATE 03/02/2017

WELDING PROCEDURE SPECIFICATION

PQR ELDERLEE #4

Material Specification	A36/A572 GR. 36 / 50 / A709 GR. 36 / 50
Welding Process	GMAW
Manual or Machine	SEMAUTOMATIC ROBOTIC
Position of Welding	FLAT
Filler Metal Specification	A5.18
Filler Metal Classification	L-56 ER70S-6 LINCOLN
Flux	N/A
Shielding Gas	90% ARGON / 10% CO2 Dew Point -40DEG F Flow Rate 45CFH
Single or Multiple Pass	SINGLE
Single or Multiple Arc	SINGLE
Welding Current	DC
Polarity	REVERSE ELECTRODE POSITIVE CTWD 3/4"
Welding Progression	STRINGER
Root Treatment	ROOT SHALL BE CLEAN AND FREE OF FOREIGN MATTER
Preheat and Interpass Temperature	MIN PREHEAT 50 DEG ≤ 0.75" 70 DEG > 0.75" MAX INTERPASS 400 DEG
Postheat Temperature	NONE
Heat Input	Min 10.56 Max 15.84

WELDING PROCEDURE

Pass no.	Electrode size	Welding Current Amperes	Welding Current Volts	Travel speed	Joint detail
1	.045	190	22	19	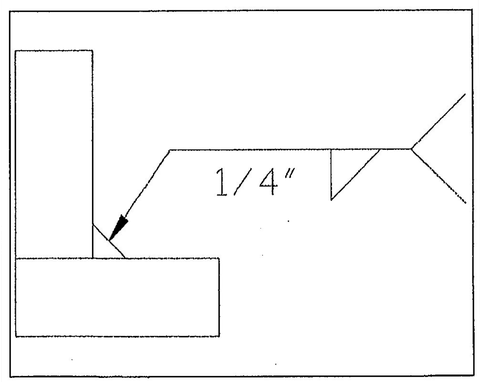
		171 TO 200	20 TO 23	18 TO 21	

This procedure may vary due to fabrication sequence, fit-up, pass size, etc., within the limitation of variables given in Section 5.

Procedure No. 8001
Revision No. 1

Contractor Elderlee, Inc.
Authorized By RANDY SCOTT
Date 2/7/2017

Form III-2

SHOP DRAWING REVIEW

☐ REVIEWED AS REQUIRED BY THE CONSTRUCTION CONTRACT DOCUMENTS AND APPROVED, BUT ONLY FOR CONFORMANCE TO THE DESIGN CONCEPT OF THE WORK, AND SUBJECT TO FURTHER LIMITATIONS AND REQUIREMENTS CONTAINED IN THE CONSTRUCTION CONTRACT DOCUMENTS.

☐ REJECTED ☐ REVISE AND RESUBMIT ☒ APPROVED AS NOTED

CORRECTIONS OR COMMENTS MADE ON THE SHOP DRAWINGS DURING THIS REVIEW DID NOT RELIEVE CONTRACTOR FROM COMPLIANCE WITH REQUIREMENTS OF THE DRAWINGS AND SPECIFICATIONS. THIS CHECK IS ONLY FOR REVIEW OF GENERAL CONFORMANCE WITH THE DESIGN CONCEPT OF THE PROJECT AND GENERAL COMPLIANCE WITH THE INFORMATION GIVEN IN THE CONTRACT DOCUMENTS. THE CONTRACTOR IS RESPONSIBLE FOR: CONFIRMING AND CORRELATING ALL QUANTITIES AND DIMENSIONS; SELECTING FABRICATION PROCESSES AND TECHNIQUES OF CONSTRUCTION; COORDINATING THEIR WORK WITH THAT OF ALL OTHER TRADES; AND PERFORMING THEIR WORK IN A SAFE AND SATISFACTORY MANNER.

CLD Consulting Engineers
540 Commercial Street
Manchester, NH 03101
603-668-8223

Job Number: 140116
Reviewed by: S.Beaumont
Date: 02/27/2017

Vermont Agency of Transportation
RECEIVED
CK'D BY CLD/RYAN OK'D BY WPELLETIER
February 27, 2017
RESUBMIT nO Approved AsNoted
BY WPELLETIER DATE 03/02/2017

WELDING PROCEDURE SPECIFICATION

PQR ELDERLEE #3

Material Specification	A36/A500GR.B/A53/A572GR.36/50/A709GR.36/50/A108
Welding Process	FCAW
Manual or Machine	SEMAUTOMATIC
Position of Welding	FLAT
Filler Metal Specification	A5.29
Filler Metal Classification	E81T1-NI1C-JH4 LINCOLN ULTERCORE 81i1C-H
Flux	N/A
Shielding Gas	CO 2 Dew Point -40DEG F Flow Rate 50CFH
Single or Multiple Pass	SINGLE (45 TO 63 CFH)
Single or Multiple Arc	SINGLE
Welding Current	DC
Polarity	REVERSE ELECTRODE POSITIVE CTWD 3/4"
Welding Progression	STRINGER
Root Treatment	ROOT SHALL BE CLEAN AND FREE OF FOREIGN MATTER
Preheat and Interpass Temperature	MIN PREHEAT 50 DEG ≤ 0.75" 70 DEG > 0.75" MAX INTERPASS 400 DEG
Postheat Temperature	NONE
Heat Input	Min 33.92 Max 50.42

WELDING PROCEDURE

Pass no.	Electrode size	Welding Current Amperes	Welding Current Volts	Travel speed	Joint detail
1	1/16	310	25	11	
		320 TO 285	26 TO 24	12.1 TO 9.9	

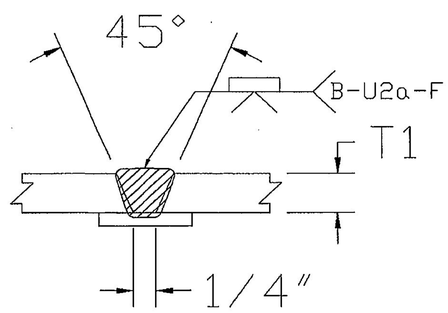

This procedure may vary due to fabrication sequence, fit-up, pass size, etc., within the limitation of variables given in Section 5.

Procedure No. 8005
Revision No. 1

Contractor Elderlee, Inc.
Authorized By RANDY SCOTT
Date 2/7/2017

Form III-2

SHOP DRAWING REVIEW

☐ REVIEWED AS REQUIRED BY THE CONSTRUCTION CONTRACT DOCUMENTS AND APPROVED, BUT ONLY FOR CONFORMANCE TO THE DESIGN CONCEPT OF THE WORK, AND SUBJECT TO FURTHER LIMITATIONS AND REQUIREMENTS CONTAINED IN THE CONSTRUCTION CONTRACT DOCUMENTS.

☐ REJECTED ☐ REVISE AND RESUBMIT ☒ APPROVED AS NOTED

CORRECTIONS OR COMMENTS MADE ON THE SHOP DRAWINGS DURING THIS REVIEW DID NOT RELIEVE CONTRACTOR FROM COMPLIANCE WITH REQUIREMENTS OF THE DRAWINGS AND SPECIFICATIONS. THIS CHECK IS ONLY FOR REVIEW OF GENERAL CONFORMANCE WITH THE DESIGN CONCEPT OF THE PROJECT AND GENERAL COMPLIANCE WITH THE INFORMATION GIVEN IN THE CONTRACT DOCUMENTS. THE CONTRACTOR IS RESPONSIBLE FOR: CONFIRMING AND CORRELATING ALL QUANTITIES AND DIMENSIONS: SELECTING FABRICATION PROCESSES AND TECHNIQUES OF CONSTRUCTION: COORDINATING THEIR WORK WITH THAT OF ALL OTHER TRADES: AND PERFORMING THEIR WORK IN A SAFE AND SATISFACTORY MANNER.

CLD Consulting Engineers
540 Commercial Street
Manchester, NH 03101
603-668-8223

Job Number: 140116
Reviewed by: S.Beaumont
Date: 02/27/2017

Vermont Agency of Transportation

RECEIVED

CK'D BY CLD/RYAN OK'D BY WPELLETIER

February 27, 2017

RESUBMIT nO Approved AsNoted

BY WPELLETIER DATE 03/02/2017