STATE OF VERMONT
AGENCY OF TRANSPORTATION

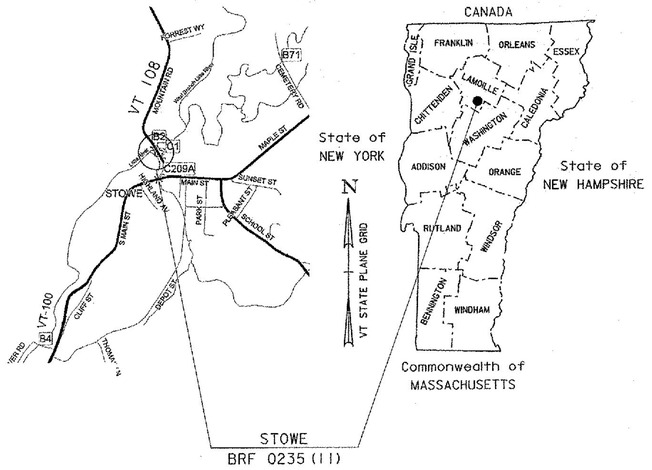

PROPOSED IMPROVEMENT
BRIDGE PROJECT

TOWN OF STOWE
COUNTY OF LAMOILLE

ROUTE NO : VT RT 108, MAJOR COLLECTOR BRIDGE NO : 2

PROJECT LOCATION: BEGINNING 0.066 MILES NORTH OF THE INTERSECTION OF VT 108 AND VT 100 AND EXTENDING 0.025 MILES NORTH ON VT 108.

PROJECT DESCRIPTION: REPLACEMENT OF EXISTING BRIDGE TO INCLUDE THE SUPERSTRUCTURE AND SUBSTRUCTURE AND APPROACH ROADWAY WORK.

LENGTH OF STRUCTURE:	131.56 FEET
LENGTH OF ROADWAY:	0.00 FEET
LENGTH OF PROJECT:	131.56 FEET

RECORD PLANS

CONTRACTOR: CCS CONSTRUCTORS LLC- MORRISVILLE, VT

RESIDENT ENGINEER: BOB SUCKERT

CONSTRUCTION BEGAN: NOVEMBER 10, 2014

CONSTRUCTION COMPLETE: JULY 31, 2015

RECORD PLANS BY: BOB SUCKERT & KEVIN KING

I HEREBY CERTIFY THAT ALL THE CONSTRUCTION REQUIRED BY THIS SET OF DRAWINGS HAS BEEN ACCOMPLISHED AS INDICATED HEREIN.

BY _____ RESIDENT ENGINEER

DATE 3-2-17

NOTE: Any further information concerning final quantities, amounts or other details relative to this project may be found at Central Files in the electronic archives.

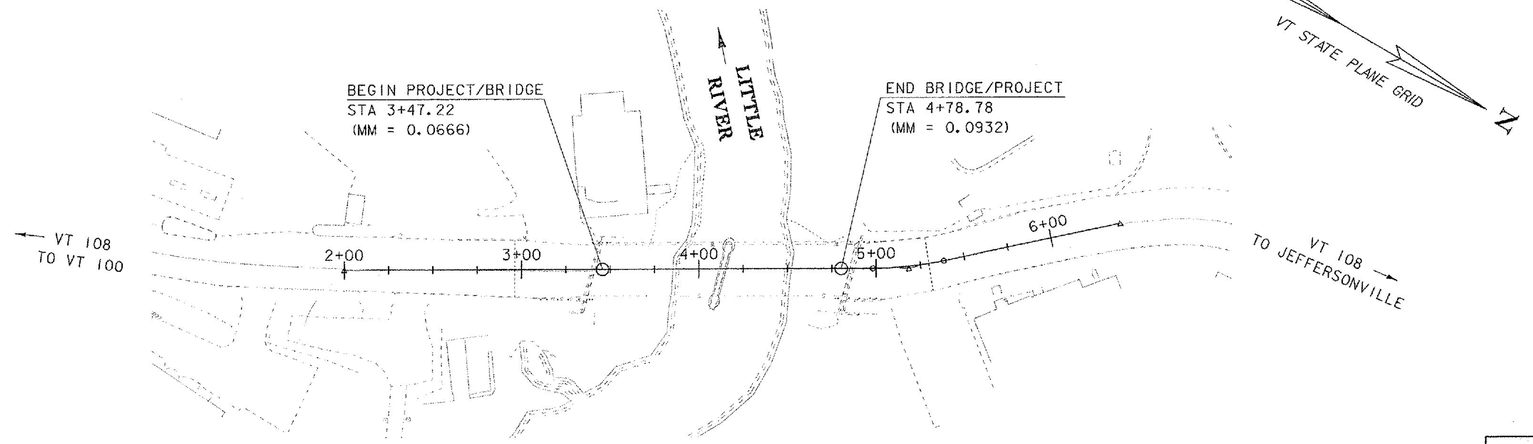

CONSTRUCTION IS TO BE CARRIED ON IN ACCORDANCE WITH THESE PLANS AND THE STANDARD SPECIFICATIONS FOR CONSTRUCTION DATED 2011, AS APPROVED BY THE FEDERAL HIGHWAY ADMINISTRATION ON JULY 20, 2011 FOR USE ON THIS PROJECT, INCLUDING ALL SUBSEQUENT REVISIONS AND SUCH REVISED SPECIFICATIONS AND SPECIAL PROVISIONS AS ARE INCORPORATED IN THESE PLANS.

QUALITY ASSURANCE PROGRAM : LEVEL 2	
SURVEYED BY :	R. GILMAN
SURVEYED DATE :	9/21/2009
DATUM	
VERTICAL	NAVD88
HORIZONTAL	NAD83 (96)

CHIEF ENGINEER OF THE HIGHWAY DIVISION

APPROVED _____ DATE 7-14-14

PROJECT MANAGER : C. CARLSON, P.E.

PROJECT NAME : STOWE

PROJECT NUMBER : BRF 0235(11)

SHEET 1 OF 64 SHEETS

STATE OF VERMONT
AGENCY OF TRANSPORTATION

PRELIMINARY INFORMATION SHEET (BRIDGE)

Version 11.06.15

LRFD

INDEX OF SHEETS

PLAN SHEETS

1	TITLE SHEET
2	PRELIMINARY INFORMATION SHEET
3 - 4	TYPICAL SECTIONS SHEET 1-2
5	GENERAL NOTES
6 - 8	QUANTITY SHEET 1-3
9	BRIDGE QUANTITY SHEET
10	CONVENTIONAL SYMBOLOGY LEGEND
11	TIE SHEET
12	LAYOUT SHEET
13	VT 108 PROFILE
14	UTILITY LAYOUT
15	PIPE PROFILES
16	DRAINAGE DETAILS
17	TRAFFIC SIGN & STRIPING
18	TRAFFIC SIGN SUMMARY
19	TRAFFIC DETOUR PLAN
20	TRAFFIC CONTROL PLAN
21	TEMPORARY TRAFFIC SIGNAL PLAN
22	TEMPORARY TRAFFIC SIGNAL SYSTEM NOTES
23	BORING INFORMATION SHEET
24 - 26	BORING LOGS 1-3
27	PLAN & ELEVATION
28	DECK TYPICAL & DETAILS
29	DECK REINFORCING PLAN
30	FRAMING PLAN
31	CAMBER & DEFLECTION
32	APPROACH SLAB DETAILS
33	WALK FRAMING PLAN & ELEVATION
34 - 35	WALK DETAIL SHEET 1-2
36	BRIDGE & APPROACH RAIL DETAILS
37	TEMPORARY BEARING DETAILS
38	ABUTMENT # 1 PLAN & ELEVATION
39	ABUTMENT # 2 PLAN & ELEVATION
40	ABUTMENT #1 REINFORCING DETAILS
41	ABUTMENT #2 REINFORCING DETAILS
42	WINGWALL 1-2 ELEVATIONS & TYPICAL
43	WINGWALL 3-4 ELEVATIONS
44	REINFORCING STEEL SCHEDULE
45	BANKING DAIGRAM & MATERIAL TRANSITION
46 - 50	VT108 CROSS SECTIONS SHEET 1-5
51 - 56	CHANNEL CROSS SECTIONS 1-6
57	EPSC NARRATIVE
58	EPSC EXISTING LAYOUT
59	EPSC CONSTRUCTION LAYOUT
60	EPSC FINAL LAYOUT
61 - 62	EPSC DETAIL SHEET 1-2
63	R.O.W. LAYOUT SHEET
64	R.O.W. DETAIL SHEET

STANDARDS LIST

C-2A	PORTLAND CEMENT CONCRETE SIDEWALK DRIVE ENTRANCES WITH SIDEWALK A	10-14-2005
C-2B	PORTLAND CEMENT CONCRETE SIDEWALK DRIVE ENTRANCES WITH SIDEWALK A	10-14-2005
C-3A	SIDEWALK RAMPS	03-10-2008
C-3B	SIDEWALK RAMPS AND MEDIAN ISLANDS	03-10-2008
C-10	CURBING	02-11-2008
D-15	PRECAST REINF CONC. MH-GRATES, CAST IRON GRATE WITH FRAME, TYPE D & E	06-01-1994
E-144	REGULATORY SIGN DETAILS	03-29-1999
E-171A	TRAFFIC CONTROL SIGNALS GENERAL NOTES & DETAILS	08-09-1995
E-171B	TRAFFIC CONTROL SIGNALS MISC. DETAILS	08-09-1995
E-175	POWER DROP STANCHIONS	06-08-2009
G-1B	BOX BEAM GUARD RAIL	06-01-1994
S-352A	BRIDGE RAILING, GALVANIZED STEEL TUBING/CONCRETE COMBINATION	08-22-2012
S-352B	BRIDGE RAILING, GALVANIZED STEEL TUBING/CONCRETE COMBINATION	08-22-2012
S-352C	BRIDGE RAILING, GALVANIZED STEEL TUBING/CONCRETE COMBINATION	08-22-2012
T-1	TRAFFIC CONTROL GENERAL NOTES	08-06-2012
T-10	CONVENTIONAL ROADS CONSTRUCTION APPROACH SIGNING	08-06-2012
T-17	TRAFFIC CONTROL MISCELLANEOUS DETAILS	08-06-2012
T-21	TEMPORARY TRAFFIC CONTROL FOR THREE LANE ROADWAY CLOSURE	08-06-2012
T-28	CONSTRUCTION SIGN DETAILS	08-06-2012
T-29	CONSTRUCTION SIGN DETAILS	08-06-2012
T-30	CONSTRUCTION SIGN DETAILS	08-06-2012
T-31	CONSTRUCTION SIGN DETAILS	08-06-2012
T-35	CONSTRUCTION ZONE LONGITUDNAL DROP-OFFS	08-06-2012
T-36	CONSTRUCTION ZONE LONGITUDNAL DROP-OFFS FOR PAVING	08-06-2012
T-42	BRIDGE NUMBER PLAQUE	04-09-2014
T-45	SQUARE TUBE SIGN POST AND ANCHOR	01-02-2013

STRUCTURAL DETAIL SHEETS

SD-501.00	CONCRETE DETAILS AND NOTES	5/7/2010
SD-502.00	CONCRETE DETAILS AND NOTES	10/10/2012
SD-516.10	BRIDGE JOINT ASHPALTIC PLUG	2/24/2011
SD-601.00	STRUCTURAL STEEL DETAILS AND NOTES	6/4/2010
SD-602.00	STRUCTURAL STEEL PLATE GIRDER DETAILS AND NOTES	5/2/2011

TOWN WATERLINE REPLACEMENT SHEETS

1	12" WATERLINE RELOCATION AND 10" TEMPORARY WATER PLAN AND PROFILE
2	WATER AND STORM DRAIN DETAILS

TRAFFIC DATA

YEAR	ADT	DHV	% D	% T	ADTT
2015	8200	1100	53	4.3	340
2035	9200	1200	53	6.8	600

20 year ESAL for flexible pavement from 2015 to 2035 : 2566000

40 year ESAL for flexible pavement from 2015 to 2055 : 6385000

Design Speed : 25 mph

AS BUILT "REBAR" DETAIL

LEVEL I	LEVEL II	LEVEL III
TYPE:	TYPE:	TYPE:
GRADE:	GRADE:	GRADE:

FINAL HYDRAULIC REPORT

HYDROLOGIC DATA

Date: January 2014

DRAINAGE AREA : 52.8 sq. mi.
CHARACTER OF TERRAIN : Hilly to mountainous, a mixture of forested and open land
STREAM CHARACTERISTICS : Semi-alluvial, sinuous, floodplain - wide upst and narrow dnst
NATURE OF STREAMBED : Gravel, cobbles and some ledge

PEAK FLOW DATA

Q 2.33 =	2500 cfs	Q 50 =	6060 cfs
Q 10 =	4100 cfs	Q 100 =	7150 cfs
Q 25 =	5200 cfs	Q 500 =	9680 cfs

DATE OF FLOOD OF RECORD unknown
ESTIMATED DISCHARGE: unknown
WATER SURFACE ELEV.: unknown
NATURAL STREAM VELOCITY : @ Q50 = 8.3 fps
ICE CONDITIONS : Moderate
DEBRIS: Moderate
DOES THE STREAM REACH MAXIMUM HIGHWATER ELEV. RAPIDLY? No
IS ORDINARY RISE RAPID? Yes
IS STAGE AFFECTED BY UPSTREAM OR DOWNSTREAM CONDITIONS? No
IF YES, DESCRIBE:

WATERSHED STORAGE: < 1% HEADWATERS:
UNIFORM: X
IMMEDIATELY ABOVE SITE:

EXISTING STRUCTURE INFORMATION

STRUCTURE TYPE: Two span steel beam bridge
YEAR BUILT: 1944, reconstructed 1973
CLEAR SPAN(NORMAL TO STREAM): Two 67' spans = 134' total
VERTICAL CLEARANCE ABOVE STREAMBED: 27'
WATERWAY OF FULL OPENING: 2050 sf
DISPOSITION OF STRUCTURE: Remove and replace
TYPE OF MATERIAL UNDER SUBSTRUCTURE: See record plans & borings

WATER SURFACE ELEVATIONS AT:

Q2.33 =	692.9'	VELOCITY =	7.1 fps
Q10 =	696.0'	"	7.3 fps
Q25 =	697.3'	"	8.2 fps
Q50 =	698.3'	"	8.8 fps
Q100 =	699.5'	"	9.4 fps

LONG TERM STREAMBED CHANGES: 1' to 2' of scour through the bridge.
No other changes noted.

IS THE ROADWAY OVERTOPPED BELOW Q100: No
FREQUENCY: Above Q100
RELIEF ELEVATION: 710.5'
DISCHARGE OVER ROAD @Q100: none

UPSTREAM STRUCTURE

TOWN: N.A. - River divides DISTANCE:
HIGHWAY # : STRUCTURE #:
CLEAR SPAN: CLEAR HEIGHT:
YEAR BUILT: FULL WATERWAY:
STRUCTURE TYPE:

DOWNSTREAM STRUCTURE

TOWN: Stowe DISTANCE: 3500'
HIGHWAY # : T.H. 5 STRUCTURE #: 4
CLEAR SPAN: 70' CLEAR HEIGHT: 15'
YEAR BUILT: 1940 FULL WATERWAY: N/A
STRUCTURE TYPE: Steel beam bridge with concrete deck

LRFR LOAD RATING FACTORS

LOADING LEVELS	TRUCK						
	H-20	HL-93	3S2	6 AXLE	3A. STR.	4A. STR.	5A. SEMI
TONNAGE	20	36	36	66	30	34.5	38
INVENTORY	4.24	1.19					
POSTING							
OPERATING	3.26	1.55	2.83	1.72	2.91	2.57	2.55
COMMENTS:							

PILE DRIVING AND TESTING REQUIREMENTS

1. NOMINAL PILE DRIVING CAPACITY — Rndr: 564.00 KIP
2. PILE TEST RESISTANCE FACTOR — ϕ: 0.7
3. MAXIMUM PILE TIP ELEVATION — NA
4. PRE-EXCAVATED INTEGRAL ABUTMENT PILES. MIN. 3'-0" INTO SOLID ROCK, SAND FILL AROUND PILE IN CAVITY.

PROPOSED STRUCTURE

STRUCTURE TYPE: New single span steel girder bridge

CLEAR SPAN(NORMAL TO STREAM): 123'
VERTICAL CLEARANCE ABOVE STREAMBED: 24'
WATERWAY OF FULL OPENING: 1900 sf per

WATER SURFACE ELEVATIONS AT:

Q2.33 =	692.6'	VELOCITY=	6.9 fps
Q10 =	695.8'	"	6.9 fps
Q25 =	697.1'	"	7.8 fps
Q50 =	698.0'	"	8.3 fps
Q100 =	699.2'	"	8.8 fps

IS THE ROADWAY OVERTOPPED BELOW Q100: No
FREQUENCY: Above Q100
RELIEF ELEVATION: 710.5'
DISCHARGE OVER ROAD @Q100: none

AVERAGE LOW ELEVATION OF SUPERSTRUCTURE: 707.4'
VERTICAL CLEARANCE: @ Q50 = 9.4'

SCOUR: Contraction scour calculated as 3' at Q100 and 7 ' at Q500. Scour may be less where ledge is present.
REQUIRED CHANNEL PROTECTION: Stone Fill, Type IV

PERMIT INFORMATION

AVERAGE DAILY FLOW:	110 cfs	
ORDINARY LOW WATER:	50 cfs	DEPTH OR ELEVATION:
ORDINARY HIGH WATER:	1100 cfs	Depth = 2.0'
		Depth = 6.0'

TEMPORARY BRIDGE REQUIREMENTS

STRUCTURE TYPE: No temporary bridge.
CLEAR SPAN (NORMAL TO STREAM):
VERTICAL CLEARANCE ABOVE STREAMBED:
WATERWAY AREA OF FULL OPENING:

ADDITIONAL INFORMATION

TRAFFIC MAINTENANCE NOTES

1. MAINTAIN TRAFFIC ON AN OFF SITE DETOUR.
2. SEE TRAFFIC CONTROL PLAN FOR TRAFFIC SIGNAL DETAILS.

DESIGN VALUES

1. DESIGN LIVE LOAD		HL-93
2. FUTURE PAVEMENT	dp:	3.0 INCH
3. DESIGN SPAN	L:	130.00 FT
4. MIN. MID-SPAN POS. CAMBER @ RELEASE (PRESTRESSED UNITS)	Δ:	---
5. PRESTRESSING STRAND (0.60 INCH DIAMETER - LOW RELAX)	fy:	270 KSI
6. PRESTRESSED CONCRETE STRENGTH	f'c:	---
7. PRESTRESSED CONCRETE RELEASE STRENGTH	f'ci:	---
8. CONCRETE, HIGH PERFORMANCE CLASS AA	f'c:	4.0 KSI
9. CONCRETE, HIGH PERFORMANCE CLASS A	f'c:	4.0 KSI
10. CONCRETE, HIGH PERFORMANCE CLASS B	f'c:	3.5 KSI
11. CONCRETE, CLASS C	f'c:	3.0 KSI
12. REINFORCING STEEL	fy:	60 KSI
13. STRUCTURAL STEEL AASHTO M270 (WEATHERING)	fy:	50 KSI
14. SOIL UNIT WEIGHT	γ:	0.140 KCF
15. NOMINAL BEARING RESISTANCE OF SOIL	qn:	4.0 KSF
16. SOIL BEARING RESISTANCE FACTOR (REFER TO AASHTO LRFD)	ϕ:	0.45
17. NOMINAL BEARING RESISTANCE OF ROCK	qn:	---
18. ROCK BEARING RESISTANCE FACTOR (REFER TO AASHTO LRFD)	ϕ:	---
19. NOMINAL AXIAL PILE RESISTANCE	qp:	564.0 KIPS
20. PILE YIELD STRENGTH ASTM A572	fy:	50 KSI
21. PILE SIZE		HP 12X 84
22. EST. PILE LENGTHS (TWO SUBSTRUCTURES) (ABUTMENT 1 = 11 AND ABUTMENT 2 = 20) FT	Lp:	
23. PILE RESISTANCE FACTOR	ϕ:	0.70
24. LATERAL PILE DEFLECTION	Δ:	0.76 INCH
25. BASIC WIND SPEED	V3s:	---
26. MINIMUM GROUND SNOW LOAD	pg:	---
27. SEISMIC DATA PGA: 15 %g	Ss:	---
	S1:	---

PROJECT NAME: **STOWE**
PROJECT NUMBER: **BRF 0235 (11)**

FILE NAME: **s87e052pi.dgn**
PROJECT LEADER: **C. CARLSON**
DESIGNED BY: **D. PETERSON**
PRELIMINARY INFORMATION SHEET

PLOT DATE: 7/17/2014
DRAWN BY: **M. LONGSTREET**
CHECKED BY: **J. LACROIX**
SHEET 2 OF 64

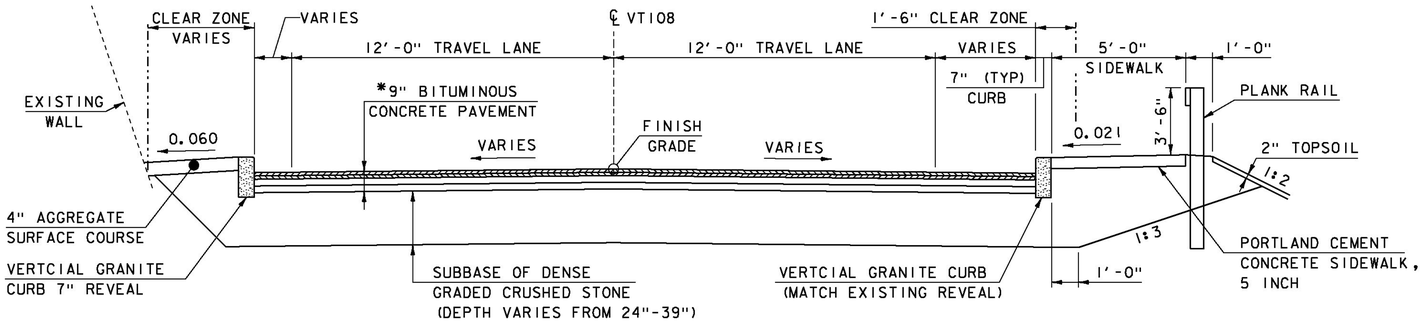

ROADWAY TYPICAL SECTION

SCALE: 3/8" = 1'-0"

*2 LIFTS OF 1½" BITUM. CONC. PAVEMENT TYPE IIIS OVER 2 LIFTS OF 3" BITUM. CONC. PAVEMENT TYPE IS OR IIS PAID UNDER SPECIAL PROVISION (BITUMINOUS CONCRETE PAVEMENT, SMALL QUANTITY).

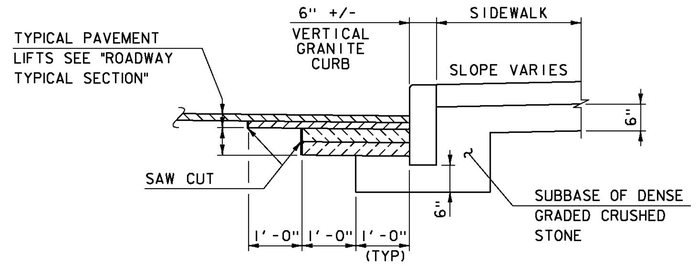

CURB & SIDEWALK TYPICAL

SCALE: 3/4" = 1'-0"

THIS TYPICAL SECTION APPLIES TO NEW CURB AND/OR SIDEWALK LOCATIONS WHERE THERE IS NO NEW ROADWAY SUBBASE REQUIRED. STA 2+00.00 TO STA 2+89.50 AND STA 5+37.50 TO STA 6+40.00

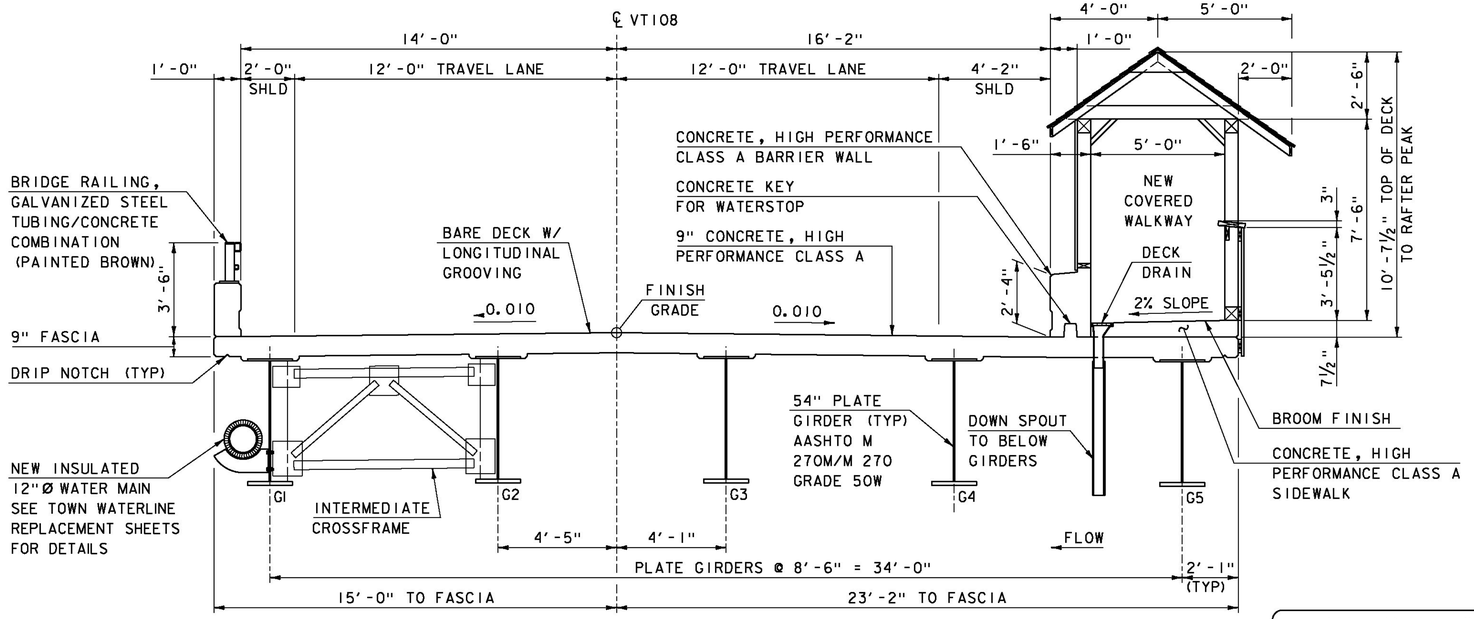

BRIDGE TYPICAL SECTION

SCALE: 3/8" = 1'-0"

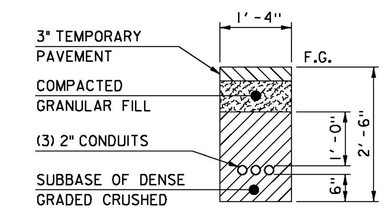

TEMPORARY UTILITY TRENCH TYPICAL

SCALE: 3/4" = 1'-0"

MATERIAL TOLERANCES
(IF USED ON PROJECT)

SURFACE	
- PAVEMENT (TOTAL THICKNESS)	+/- ¼"
- AGGREGATE SURFACE COURSE	+/- ½"
SUBBASE	+/- 1"
SAND BORROW	+/- 1"

PROJECT NAME: STOWE
PROJECT NUMBER: BRF 0235 (11)

FILE NAME: s87e052typ.dgn
PROJECT LEADER: C. CARLSON
DESIGNED BY: D. PETERSON
TYPICAL SECTIONS SHEET 1

PLOT DATE: 28-JUL-2014
DRAWN BY: M. LONGSTREET
CHECKED BY: J. LACROIX
SHEET 3 OF 64

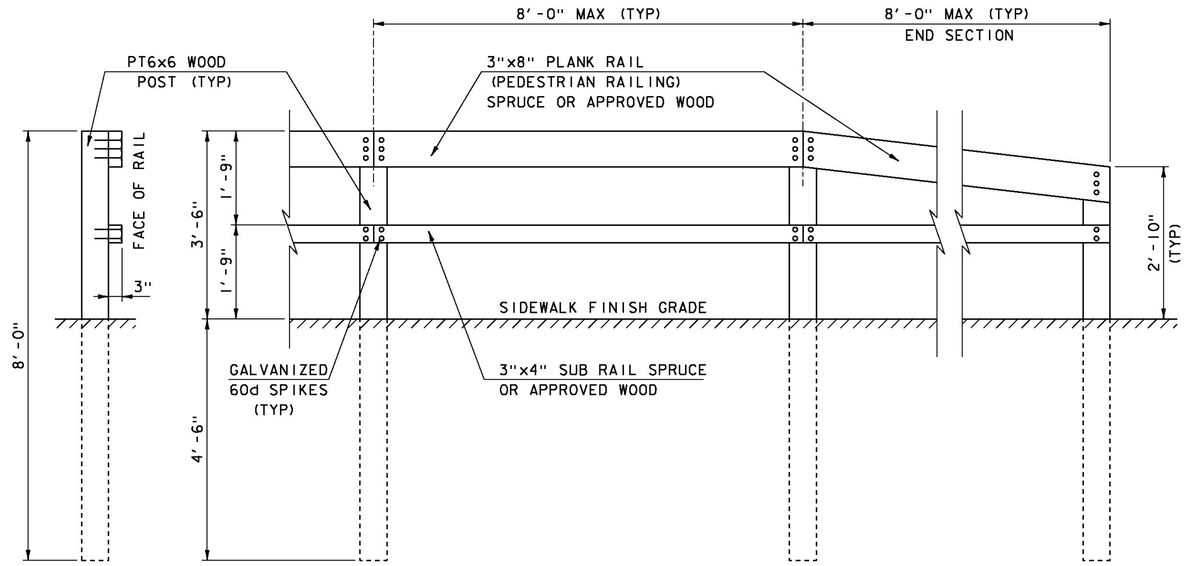

PLANK RAIL (PEDESTRIAN RAILING)

SCALE 3/4" = 1'-0"

1) THE HANDGRIP PORTION OF PEDESTRIAN RAIL SHALL HAVE A SMOOTH SURFACE WITH NO SHARP CORNERS.

2) EDGES ON TOP SIDES OF WOOD PLANK SHALL HAVE A RADIUS OF 1/4". RAILING SHALL BE CONTINUOUS FOR THE FULL LENGTH AS INDICATED ON THE PLANS.

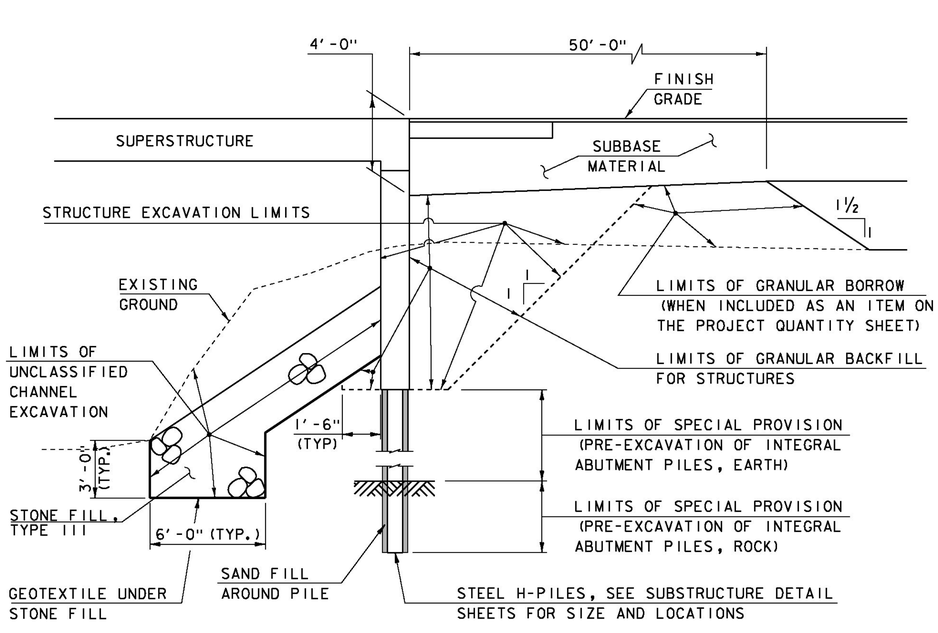

ABUTMENT EARTHWORK TYPICAL SECTION

NOT TO SCALE

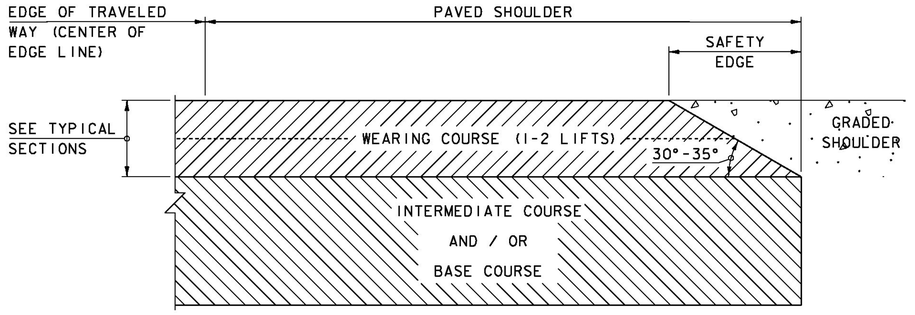

SAFETY EDGE DETAIL

NOT TO SCALE

1. LEVELING COURSE MAY INCLUDE THE "SAFETY EDGE" AT THE CONTRACTOR'S CHOICE.

2. THE EDGE OF PAVEMENT SHALL BE FORMED IN SUCH A WAY THAT THE BITUMINOUS CONCRETE PAVEMENT IS EXTRUDED OR COMPRESSED TO FORM THE 30 TO 35 DEGREE ANGLE. DEVICES THAT SIMPLY STRIKE-OFF THE MIX WITHOUT PROVIDING ANY COMPACTIVE EFFORT WILL NOT BE ALLOWED.

3. THE PAVED SHOULDER EXTENDS FROM THE EDGE OF TRAVELED WAY TO THE EDGE OF THE WEARING COURSE, INCLUDING THE "SAFETY EDGE".

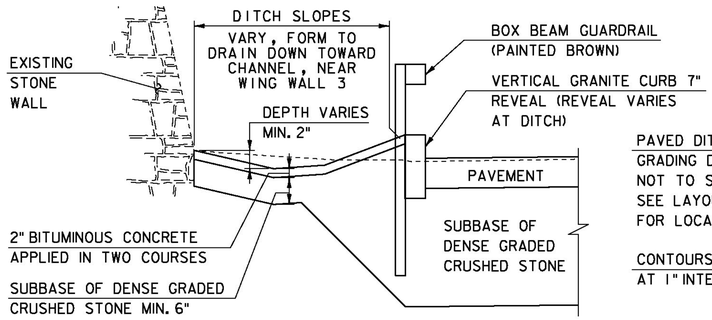

PAVED DITCH TYPICAL

SCALE: 3/4" = 1'-0"

PAVED DITCH
GRADING DETAIL
NOT TO SCALE,
SEE LAYOUT SHEET
FOR LOCATION

CONTOURS SHOWN
AT 1" INTERVAL

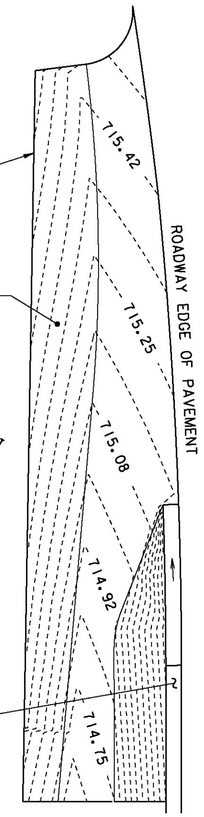

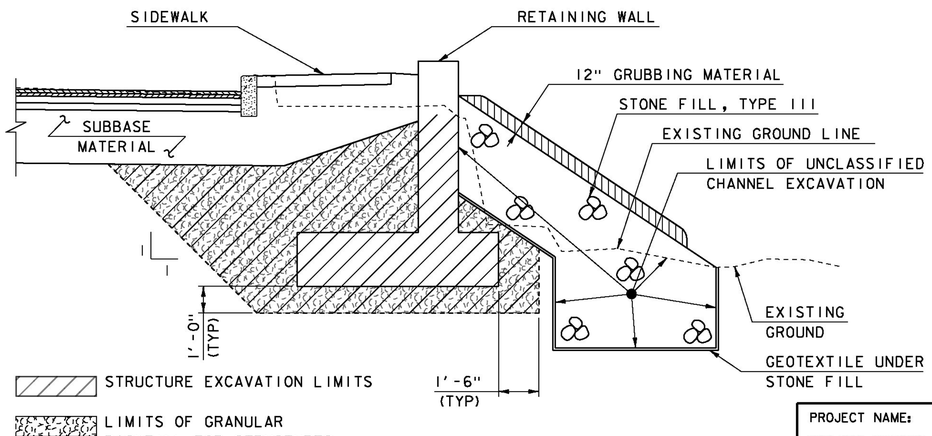

RETAINING WALL EARTHWORK TYPICAL

SCALE: 3/8" = 1'-0"

PROJECT NAME:	STOWE
PROJECT NUMBER:	BRF 0235 (11)
FILE NAME: s87e052typ.dgn	PLOT DATE: 28-JUL-2014
PROJECT LEADER: C. CARLSON	DRAWN BY: M. LONGSTREET
DESIGNED BY: D. PETERSON	CHECKED BY: J. LACROIX
TYPICAL SECTIONS SHEET 2	SHEET 4 OF 64

GENERAL

1. ALL MATERIALS AND CONSTRUCTION SHALL CONFORM TO THE VERMONT AGENCY OF TRANSPORTATION 2011 STANDARD SPECIFICATIONS FOR CONSTRUCTION, THE 2012 AASHTO LRFD BRIDGE DESIGN SPECIFICATIONS, AND THEIR LATEST REVISIONS.

2. ALL DIMENSIONS ARE HORIZONTAL OR VERTICAL, AND ARE GIVEN AT 68 DEGREES FAHRENHEIT, UNLESS NOTED OTHERWISE.

3. ALL PRECAST SUBSTRUCTURE AND APPROACH SLAB CONCRETE ELEMENTS SHALL BE FABRICATED TO THE SPECIFIED DIMENSIONS AND ERECTED IN THE SPECIFIED LOCATIONS, ALL WITHIN TOLERANCES DEFINED ON THE PLANS AND IN THE PRECAST/PRESTRESSED CONCRETE INSTITUTE TOLERANCE MANUAL FOR PRECAST AND PRESTRESSED CONCRETE CONSTRUCTION, MNL 135-00, AND ITS LATEST REVISIONS.

EARTHWORK

4. ITEM 529.15 "REMOVAL OF STRUCTURE" SHALL INCLUDE:
   - THE REMOVAL OF THE EXISTING SUPERSTRUCTURE AND ANY PORTION OF THE EXISTING ABUTMENTS AND PIERS NOT REMOVED UNDER STRUCTURE EXCAVATION OR UNCLASSIFIED CHANNEL EXCAVATION.
   - THE CONCRETE PIER SHALL BE CUT OFF AT STREAM BED ELEVATION.
   - COMPLETE REMOVAL OF LAID-UP STONE UNDER EXSITING WINGWALL #4.

5. ABUTMENT STONE FILL: PLACE STONE FILL UNDER THE BRIDGE BEFORE SETTING THE STRUCTURAL STEEL.

6. REMOVAL OF THE EXISTING BOX CULVERT HEADWALL FOR DRAINAGE INSTALLATION SHALL BE TO THE ELEVATION SHOWN ON THE PLANS. PAYMENT SHALL BE MADE UNDER ITEM 203.16, SOLID ROCK EXCAVATION.

CONCRETE AND REINFORCING STEEL

7. ITEM 514.10, "WATER REPELLENT, SILANE", SHALL BE APPLIED TO ALL EXPOSED CONCRETE ON THE BRIDGE SUPERSTRUCTURE, INCLUDING THE SIDEWALK INSIDE THE COVERED WALKWAY, AND SUBSTRUCTURE, WITH THE EXCEPTION OF THE BOTTOM OF THE DECK BETWEEN THE DRIP NOTCHES.

8. ALL EXPOSED EDGES OF CONCRETE SHALL BE CHAMFERED 1 INCH BY 1 INCH, UNLESS OTHERWISE NOTED.

9. CONCRETE CURE TIMES SPECIFIED IN TABLE 501.17A OF THE SPECIFICATIONS SHALL BE REDUCED TO THE FOLLOWING FOR THE SPECIFIED COMPONENTS ONLY:
   - DECK: 7 DAYS
   - ABUTMENTS: 4 DAYS
   - WINGWALLS: 4 DAYS

10. JOINTS AND SCORE MARKS IN CONCRETE SHALL BE CONSTRUCTED AS INDICATED ON THE PLANS OR AS DIRECTED BY THE ENGINEER.

11. ITEM 501.33, HIGH PERFORMANCE CONCRETE, CLASS A: USE FOR THE DECK, WALKWAY SIDEWALK, BRIDGE RAIL AND INTEGRAL ABUTMENT CURTAIN WALL AND WINGWALLS ABOVE THE PILE CAP CONSTRUCTION JOINT.

12. ALL PRECAST SUBSTRUCTURE AND APPROACH SLAB CONCRETE SHALL MEET THE REQUIREMENTS OF SECTION 540 – PRECAST CONCRETE.

13. ALL CONCRETE FOR PRECAST APPROACH SLAB CLOSURE POURS AND ABUTMENT PILE CAVITIES SHALL MEET THE REQUIREMENTS OF ITEM 900.608, "SPECIAL PROVISION (HIGH PERFORMANCE CONCRETE, RAPID SET)".

14. ALL REINFORCING STEEL SHALL BE DETAILED AND FABRICATED USING PROCEDURES AND TOLERANCES IN ACCORDANCE WITH APPLICABLE PUBLICATIONS OF THE "CONCRETE REINFORCING STEEL INSTITUTE".

15. ALL REINFORCING STEEL IN THE SUPERSTRUCTURE, INCLUDING THE DECK, WALKWAY SIDEWALK, BRIDGE RAIL AND ANY STEEL EXTENDING INTO HPC, CLASS A SHALL MEET THE REQUIREMENTS FOR LEVEL III CORROSION RESISTANCE, SOLID STAINLESS REINFORCING STEEL IN ACCORDANCE WITH SECTION 507.

16. ALL REINFORCING STEEL IN THE PRECAST APPROACH SLABS, ABUTMENTS, WINGWALLS AND RETAINING WAL SHALL MEET THE REQUIREMENTS FOR LEVEL II CORROSION RESISTANCE IN ACCORDANCE WITH SECTION 507. PAYMENT FOR ALL APPROACH SLAB AND PRECAST ABUTMENT REINFORCING WILL BE MADE UNDER THE APPROPRIATE SECTION 540 CONTRACT ITEM. THE ADDITIONAL LONGITUDINAL STEEL IN THE APPROACH SLAB CLOSURE POURS SHALL BE LEVEL II AND BE INCIDENTAL TO THE PRECAST APPROACH SLAB CONTRACT ITEMS.

17. ALL GROUTED COUPLERS FOR BAR REINFORCEMENT SHALL MEET THE REQUIREMENTS OF SECTION 507. REINFORCING STEEL CORROSION RESISTANCE FOR ALL GROUTED COUPLERS SHALL MATCH THE BARS THAT THEY ARE INTENDED TO SPLICE.

18. GROUT FOR GROUTED COUPLERS FOR BAR REINFORCEMENT SHALL BE APPROVED BY THE SPLICE MANUFACTURER. THE CONTRACTOR SHALL SUBMIT A GROUTING PROCEDURE PROPOSAL TO THE ENGINEER, INCLUDING A PREMIX NAME BRAND FOR APPROVAL.

19. A TEMPLATE SHALL BE USED FOR THE LAYOUT OF GROUTED COUPLERS FOR BAR REINFORCEMENT. THE SAME TEMPLATE SHALL BE USED FOR MATCHING FACES OF EACH CONNECTION.

20. ALL CONNECTIONS BETWEEN PRECAST UNITS SHALL BE DRY FIT PRIOR TO DELIVERY TO THE PROJECT SITE.

21. PAYMENT FOR GROUTED COUPLER CONNECTORS SHALL BE INCIDENTAL TO ITEMS 540.10, "PRECAST CONCRETE STRUCTURE (ABUTMENT #1)" AND "PRECAST CONCRETE STRUCTURE (ABUTMENT #2)".

22. FORMWORK FOR SURFACES ON THE PRECAST APPROACH SLABS THAT WILL BE IN CONTACT WITH LONGITUDINAL CLOSURE POURS SHALL BE TREATED WITH CONCRETE SURFACE RETARDER, OR SIMILAR, TO PROVIDE A ROUGHENED SURFACE; AND POWER WASHED WITH WATER PRIOR TO ERECTION.

PRECAST ABUTMENTS AND POST TENSIONING

23. THE UNIT PRICE FOR EACH PRECAST ABUTMENT SHALL INCLUDE THE ASSOCIATED PRECAST PORTIONS OF THE WINGWALLS, (EXCLUDING THE FREESTANDING RETAINING WALL PORTION OF WINGWALL #4) AND ALL LABOR AND MATERIALS TO CONNECT WINGWALLS TO THE PILE CAPS. THIS WORK SHALL BE PAID FOR UNDER ITEM 540.10, "PRECAST CONCRETE STRUCTURE (ABUTMENT #1)" AND "PRECAST CONCRETE STRUCTURE (ABUTMENT #2)" AS APPROPRIATE.

24. IF VERTICAL CONSTRUCTION JOINTS ARE REQUIRED BY THE CONTRACTOR FOR SHIPMENT OF THE ABUTMENTS, THEN THE SECTIONS SHALL BE KEYED AND MATCH CAST. A JOINT DETAIL SHALL BE SHOWN ON THE FABRICATION DRAWINGS.

25. ALL POST-TENSIONING STRAND AND CONDUIT SHALL CONFORM TO THE REQUIREMENTS OF SECTION 510 – PRESTRESSED CONCRETE. GALVANIZED ANCHOR ASSEMBLIES, CONDUIT, AND POST-TENSIONING STRANDS SHALL BE INCLUDED UNDER ITEM 540.10, "PRECAST CONCRETE STRUCTURE (ABUTMENT #1) AND "PRECAST CONCRETE STRUCTURE (ABUTMENT #2)" AS APPROPRIATE. POST-TENSIONING STRANDS SHALL BE COVERED WITH SEAMLESS POLYPROPYLENE SHEATH (WITH CORROSION INHIBITOR GREASE BETWEEN SHEATH AND STRAND) FOR THE LENGTH OF THE STRAND, EXCEPT AT ANCHORAGE LOCATIONS.

26. GALVANIZE ANCHOR ASSEMBLIES AFTER FABRICATION ACCORDING TO AASHTO M232M/M 232.

27. DESIGN VALUES
   i. CONCRETE COMPRESSIVE STRENGTH: f'c = 5000 PSI.
   ii. POST-TENSIONING STRANDS: 0.5 INCH DIAMETER, 270 KSI, LOW RELAXATION 7-WIRE STRANDS.
   iii. ASSUMED MODULUS OF ELASTICITY IS 28,500 KSI.
   iv. THERE SHALL BE 2 STRANDS PER CONDUIT.
   v. JACKING FORCE PER STRAND = 32 KIPS

28. THE CORRUGATED STEEL PIPE SHALL BE TYPE 1, GALVANIZED. ALL COSTS ASSOCIATED WITH PLACING THE CORRUGATED STEEL PIPE SHALL BE INCLUDED IN THE BID PRICE FOR ITEM 540.10, "PRECAST CONCRETE STRUCTURE (ABUTMENT #1)" AND ITEM 540.10, "PRECAST CONCRETE STRUCTURE (ABUTMENT #2)".

29. THE FREESTANDING PORTION OF WINGWALL #4 SHALL BE PAID FOR UNDER ITEM 540.10, PRECAST CONCRETE STRUCTURE (RETAINING WALL).

STRUCTURAL STEEL

30. ALL NEW STRUCTURAL STEEL SHALL CONFORM TO AASHTO M 270M/M 270, GRADE 50W.

31. ALL WELDING SHALL CONFORM TO THE PROVISIONS OF SUBSECTION 506.10.

32. GIRDER WEBS AND CROSS FRAMES SHALL BE PLUMB IN FINAL POSITION.

33. CHARPY V-NOTCH TEST: TEST STRUCTURAL STEEL MEMBERS DESIGNATED "CVN" IN THE PLANS IN ACCORDANCE WITH SUBSECTION 714.01.

34. BOLTS FOR ALL BOLTED FIELD CONNECTIONS SHALL BE 7/8 INCH DIAMETER HIGH STRENGTH BOLTS IN 15/16 INCH DIAMETER HOLES UNLESS OTHERWISE NOTED.

35. CONNECTIONS NOT SHOWN IN THE PLANS SHALL BE DETAILED BY THE FABRICATOR IN THE FABRICATION DRAWINGS AND SUBMITTED TO THE RESIDENT ENGINEER FOR APPROVAL.

36. AFTER THE SUPERSTRUCTURE STEEL HAS BEEN ERECTED, ELEVATIONS ALONG THE TOP OF GIRDERS SHALL BE TAKEN UNDER DIRECTION OF THE RESIDENT ENGINEER FOR USE IN DETERMINING THE FINAL GRADE AND HAUNCH DEPTHS.

37. FLEMING BRACKETS OR SIMILAR FALSE WORK: SPACE FLEMING BRACKETS OR SIMILAR FALSEWORK AS REQUIRED BY DESIGN WITH A MAXIMUM SPACING OF 4'-0". THE DESIGN OF FALSEWORK SHALL BE THE RESPONSIBILITY OF THE CONTRACTOR.

38. HOLES IN WEB: FILL ANY BOLT HOLES IN THE WEBS OF THE BEAMS NOT OTHERWISE FILLED WITH BUTTON HEAD OR HEX HEAD BOLTS MEETING AASHTO M164 TYPE 3. TIGHTEN THE BOLTS IN ACCORDANCE WITH SUBSECTION 506.19 OF THE STANDARD SPECIFICATIONS.

H-PILES

39. PRE-EXCAVATION IS REQUIRED AT ALL PILE LOCATIONS. PAYMENT SHALL BE MADE UNDER ITEM 900.640, "SPECIAL PROVISION (PRE-EXCAVATION OF INTEGRAL ABUTMENTS PILES, EARTH)" OR ITEM.900.640, "SPECIAL PROVISION (PRE-EXCAVATION OF INTEGRAL ABUTMENTS PILES, ROCK)". SAND PLACED AROUND THE PILES SHALL BE INCIDENTAL TO ITEM 900.640, "SPECIAL PROVISION (PRE-EXCAVATION OF INTEGRAL ABUTMENTS PILES, ROCK)".

40. THE PILE LOCATIONS SHALL BE PRE-EXCAVATED WITH A MINIMUM PENETRATION OF 3 FEET INTO COMPETENT BEDROCK. THE MINIMUM REQUIRED PILE LENGTH IS 10 FEET. IF COMPETENT BEDROCK IS ENCOUNTERED SHALLOWER THAN 7 FEET BELOW THE BOTTOM OF THE PILE CAP, PRE-EXCAVATION TO A MINIMUM DEPTH OF 10 FEET BELOW THE PILE CAP IS REQUIRED. PRE-EXCAVATED HOLES SHALL BE A MINIMUM 24 INCHES IN DIAMETER.

41. PILES SHALL BE SEATED ON BEDROCK TO THE APPROVAL OF THE ENGINEER. ANY WORK REQUIRED FOR THIS SHALL BE INCIDENTAL TO ITEM 504.10, "FURNISHING EQUIPMENT FOR PILE DRIVING".

42. FOR ESTIMATING PURPOSES, THE PILE TIP ELEVATIONS WERE ASSUMED AND ARE SHOWN ON THE BORING LOGS. THE ACTUAL IN PLACE LENGTHS MAY VARY.

TRAFFIC CONTROL

43. TRAFFIC SHALL BE MAINTAINED ON A DETOUR AROUND THE PROJECT SITE DURING CONSTRUCTION. THE TOWN SHALL BE NOTIFIED 2 WEEKS PRIOR TO CLOSURE OF THE BRIDGE AND DETOURING OF TRAFFIC.

44. THE CONTRACTOR SHALL BE RESPONSIBLE FOR THE DESIGN AND INSTALLATION OF A SITE SPECIFIC TRAFFIC CONTROL PLAN. THIS WORK WILL BE INCIDENTAL TO ITEM 900.645, "SPECIAL PROVISION (TRAFFIC CONTROL, ALL-INCLUSIVE)".

45. AT LEAST ONE PORTABLE CHANGEABLE MESSAGE SIGN (PCMS) SHALL BE POSITIONED IN ADVANCE OF EACH APPROACH TO THE WORK ZONE ADVISING OF THE ACTIVITY AHEAD. PAYMENT FOR PCMS WILL BE MADE SEPARATELY UNDER CONTRACT ITEM 641.15.

46. A TEMPORARY TRAFFIC SIGNAL SHALL BE INSTALLED AT THE INTERSECTION OF WEST HILL ROAD AND VT 100 PRIOR TO CLOSURE OF THE BRIDGE. PAYMENT SHALL BE MADE UNDER ITEM 678.40, "TEMPORARY TRAFFIC SIGNAL SYSTEM".

47. ALL WORK AND ITEMS ASSOCIATED WITH THE OPENING THE BRIDGE TO TRAFFIC, INCLUDING TEMPORARY TRAFFIC BARRIER AND SIGNS SHALL BE PAID FOR UNDER ITEM 900.645, "SPECIAL PROVISION (TRAFFIC CONTROL, ALL-INCLUSIVE)".

48. ANY REMOVAL, COVERING AND/OR RESETTING OF EXISTING TRAFFIC SIGNS, AS DEEMED NECESSARY BY THE RESIDENT ENGINEER, WILL BE INCIDENTAL TO THE ITEM 900.645, "SPECIAL PROVISION (TRAFFIC CONTROL, ALL-INCLUSIVE)".

49. ACCESS TO ANY BUSINESSES WITHIN THE WORK ZONE SHALL BE MAINTAINED FOR BOTH VECHILES AND PEDESTRIANS. IF THE CONTRACTOR NEEDS TO CLOSE THE ACCESSES DUE TO THEIR WORK; THEY MUST CONTACT THE PROPRTY OWNERS AT LEAST ONE (1) WEEK IN ADVANCE OF THAT WORK.

50. THE CONTRACTOR SHALL PLACE DETOUR SIGNS SO AS TO AVOID BLOCKING SIGNS OF LOCAL BUSINESSES.

COVERED WALKWAY

51. PAYMENT FOR THE ANCHOR BOLTS USED TO CONNECT THE COVERED WALKWAY TO THE BRIDGE SHALL BE INCIDENTAL TO ITEM 501.33, HIGH PERFORMANCE CONCRETE, CLASS A. THE ANCHOR BOLTS SHALL CONFORM TO ASTM A 449. NUTS AND WASHERS SHALL CONFORM TO SUBSECTION 709.01(h).

52. ALL LUMBER SHALL MEET THE REQUIREMENTS OF SECTION 522 UNLESS OTHERWISE NOTED IN THE PLANS.

53. ALL LUMBER IN THE COVERED WALKWAY SHALL BE FULL SAWN, ROUGH FINISH, EXCEPT WHERE NOTED "S4S" (DRESSED LUMBER). SEE SUBSECTION 709.01(d) FOR FULL DEFINITIONS.

54. LUMBER AND TIMBERS DESIGNATED "PT" SHALL BE PRESSURE TREATED AND MEET THE REQUIREMENTS OF SUBSECTIONS 522.13 AND 726.01.

55. ALL INTERIOR AND EXTERIOR UNTREATED WOOD SURFACES SHALL BE TREATED WITH INSECTICIDE/FUNGICIDE AND FIRE RETARDANT COATINGS IN ACCORDANCE WITH SUBSECTIONS 708.05 (b) and (c) AND SUPPLEMENTAL SPECIFICATION SECTION 660.

56. ALL NAILS AND SPIKES SHALL CONFORM TO ASTM F1667 AND BE DOUBLE HOT DIPPED GALVANIZED IN ACCORDANCE WITH AASHTO M 232M/M 232 UNLESS OTHERWISE SPECIFIED IN THE PLANS.

MISCELLANEOUS

57. THE REMOVAL OF THE EXISTING WOODEN PEDESTRIAN RAIL LEADING UP TO THE COVERED WALKWAY SHALL BE PAID FOR UNDER ITEM 621.80, "REMOVAL AND DISPOSAL OF GUARDRAIL".

58. THE LIGHTING FOR THE COVERED WALKWAY SHALL BE PAID FOR UNDER ITEM 900.645 SPECIAL PROVISION (COVERED WALKWAY).

59. THE GRATE FOR DROP INLET #4 AT STATION 5+70.96 LT SHALL BE AS SHOWN ON THE WATER AND STORM DRAIN SHEET AND BE INCIDENTAL TO ITEM 604.18 PRECAST REINFORCED CONCRETE DROP INLET WITH CAST IRON GRATE.

60. THE INSTALLATION OF THE UNDERGROUND CONDUIT FOR THE TEMPORARY SERVICE TO THE BUILDING ON THE NORTHEAST CORNER OF THE BRIDGE SHALL BE INSTALLED COINCIDENTALLY WITH THE PORTION OF THE TEMPORARY WATERLINE THAT CROSSES VT108, OR AT NIGHT.

61. ALL STEEL COMPONENTS OF BRIDGE RAILING AND BOX BEAM GUARDRAIL, INCLUDING THE RAIL CONNECTION TO THE BRIDGE RAIL, SHALL BE GALVANIZED IN ACCORDANCE WITH THE STANDARD SPECIFICATIONS AND SURFACE PREPARED FOR PAINTING IN ACCORDANCE WITH ASTM D 6386. COMPONENTS SHALL BE PAINTED BROWN IN ACCORDNACE WITH SUBSECTION 708.03.

PROJECT NAME: STOWE
PROJECT NUMBER: BRF 0235 (11)

FILE NAME: s87e052forms.dgn
PROJECT LEADER: C. CARLSON
DESIGNED BY: D. PETERSON
GENERAL NOTES

PLOT DATE: 28-JUL-2014
DRAWN BY: M. LONGSTREET
CHECKED BY: J. LACROIX
SHEET 5 OF 64

STATE OF VERMONT
AGENCY OF TRANSPORTATION

QUANTITY SHEET 1

SUMMARY OF ESTIMATED QUANTITIES								TOTALS		DESCRIPTIONS				DETAILED SUMMARY OF QUANTITIES		
						ROADWAY	EROSION CONTROL	BRIDGE	FULL C. E. ITEMS	GRAND TOTAL	FINAL	UNIT	ITEMS	ITEM NUMBER	ROUND	QUANTITIES	UNIT	ITEMS
						1				1		LS	CLEARING AND GRUBBING, INCLUDING INDIVIDUAL TREES AND STUMPS	201.10				
						660				660		CY	COMMON EXCAVATION	203.15				
						11				11		CY	SOLID ROCK EXCAVATION	203.16				
						240				240		CY	UNCLASSIFIED CHANNEL EXCAVATION	203.27				
						355				355		CY	TRENCH EXCAVATION OF EARTH	204.20				
						1				1		CY	TRENCH EXCAVATION OF EARTH, EXPLORATORY (N.A.B.I.)	204.22				
								570		570		CY	STRUCTURE EXCAVATION	204.25				
						280		480		760		CY	GRANULAR BACKFILL FOR STRUCTURES	204.30				
						830				830		SY	COLD PLANING, BITUMINOUS PAVEMENT	210.10				
						540				540		CY	SUBBASE OF DENSE GRADED CRUSHED STONE	301.35				
						2				2		CY	AGGREGATE SURFACE COURSE	401.10				
						7				7		CWT	EMULSIFIED ASPHALT	404.65				
						1				1		LU	PRICE ADJUSTMENT, ASPHALT CEMENT (N.A.B.I.)	406.50				
								256		256		CY	CONCRETE, HIGH PERFORMANCE CLASS A (FPQ)	501.33				
								1		1		LS	FURNISHING EQUIPMENT FOR DRIVING PILING	504.10				
								159		159		LF	STEEL PILING, HP 12 X 84	505.165				
								210300		210300		LB	STRUCTURAL STEEL, PLATE GIRDER (FPQ)	506.55				
								58135		58135		LB	REINFORCING STEEL, LEVEL III	507.13				
								1		1		LS	SHEAR CONNECTORS (1740 - 7/8" X 7")	508.15				
								440		440		SY	LONGITUDINAL DECK GROOVING	509.10				
								62		62		GAL	WATER REPELLENT, SILANE	514.10				
								63		63		LF	BRIDGE EXPANSION JOINT, ASPHALTIC PLUG	516.10				
								63		63		LF	JOINT SEALER, HOT POURED	524.11				
								134		134		LF	BRIDGE RAILING, GALVANIZED STEEL TUBING/CONCRETE COMBINATION (PAINTED BROWN)	525.45				
								1		1		EACH	REMOVAL OF STRUCTURE (5550 SF - EST.)	529.15				
								10		10		EACH	BEARING DEVICE ASSEMBLY, STEEL REINFORCED ELASTOMERIC PAD	531.17				
								1		1		LS	PRECAST CONCRETE STRUCTURE (ABUTMENT #1)	540.10				
								1		1		LS	PRECAST CONCRETE STRUCTURE (ABUTMENT #2)	540.10				
								1		1		LS	PRECAST CONCRETE STRUCTURE (APPROACH SLAB #1)	540.10				
								1		1		LS	PRECAST CONCRETE STRUCTURE (APPROACH SLAB #2)	540.10				
								1		1		LS	PRECAST CONCRETE STRUCTURE (RETAINING WALL)	540.10				
													BEGIN OPTION AA					
						260				260		LF	18" CAAP .060 (2-2/3 X 1/2)	601.0215				
						260				260		LF	18" RCP CLASS III	601.0815				
						260				260		LF	18" CPEP(SL)	601.2615				
													END OPTION AA					

PROJECT NAME: STOWE
PROJECT NUMBER: BRF 0235 (11)

FILE NAME: s87e052forms.dgn
PROJECT LEADER: C. CARLSON
DESIGNED BY: D. PETERSON
QUANTITY SHEET 1

PLOT DATE: 28-JUL-2014
DRAWN BY: M. LONGSTREET
CHECKED BY: J. LACROIX
SHEET 6 OF 64

STATE OF VERMONT
AGENCY OF TRANSPORTATION

QUANTITY SHEET 2

SUMMARY OF ESTIMATED QUANTITIES									TOTALS		DESCRIPTIONS				DETAILED SUMMARY OF QUANTITIES		
						ROADWAY	EROSION CONTROL	BRIDGE	FULL C. E. ITEMS	GRAND TOTAL	FINAL	UNIT	ITEMS	ITEM NUMBER	ROUND	QUANTITIES	UNIT	ITEMS
													BEGIN OPTION BB					
						1				1		EACH	18" CAAPES .060 (2-2/3 X 1/2)	601.6215				
						1				1		EACH	18" RCPES CLASS III	601.6815				
						1				1		EACH	18" CPEPES	601.7015				
													END OPTION BB					
						7				7		EACH	PRECAST REINFORCED CONCRETE DROP INLET WITH CAST IRON GRATE	604.18				
						1				1		EACH	PRECAST REINFORCED CONCRETE MANHOLE WITH CAST IRON COVER	604.21				
						1				1		MGAL	DUST CONTROL WITH WATER	609.10				
								260		260		CY	STONE FILL, TYPE III	613.12				
						425				425		LF	VERTICAL GRANITE CURB	616.21				
						1				1		EACH	RELOCATE MAILBOX, SINGLE SUPPORT	617.10				
						148				148		SY	PORTLAND CEMENT CONCRETE SIDEWALK, 5 INCH	618.10				
						26				26		SY	PORTLAND CEMENT CONCRETE SIDEWALK, 8 INCH	618.11				
						11				11		SF	DETECTABLE WARNING SURFACE	618.30				
						84				84		LF	PLANK RAIL	621.15				
						86				86		LF	BOX BEAM GUARDRAIL (PAINTED BROWN)	621.30				
						111				111		LF	REMOVAL AND DISPOSAL OF GUARDRAIL	621.80				
						1				1		LS	TRANSFER TO NEW SYSTEM, WATER SYSTEM	629.42				
						80				80		HR	UNIFORMED TRAFFIC OFFICERS	630.10				
						800				800		HR	FLAGGERS	630.15				
									1	1		LS	FIELD OFFICE, ENGINEERS	631.10				
									1	1		LS	TESTING EQUIPMENT, CONCRETE	631.16				
									1	1		LS	TESTING EQUIPMENT, BITUMINOUS	631.17				
									3000	3000		DL	FIELD OFFICE TELEPHONE (N.A.B.I.)	631.26				
						1				1		LS	MOBILIZATION/DEMOBILIZATION	635.11				
						4				4		EACH	PORTABLE CHANGEABLE MESSAGE SIGN	641.15				
						880				880		LF	4 INCH WHITE LINE	646.20				
						880				880		LF	4 INCH YELLOW LINE	646.21				
						32				32		LF	CROSSWALK MARKING	646.31				
						50				50		EACH	LINE STRIPING TARGETS	646.76				
								270		270		SY	GEOTEXTILE UNDER STONE FILL	649.31				
							60			60		SY	GEOTEXTILE FOR SILT FENCE, WOVEN WIRE REINFORCED	649.515				
							90			90		SY	GEOTEXTILE FOR FILTER CURTAIN	649.61				
							10			10		LB	SEED	651.15				
							10			10		LB	SEED, WINTER RYE	651.17				
							18			18		LB	FERTILIZER	651.18				
							0.1			0.1		TON	AGRICULTURAL LIMESTONE	651.20				
							0.1			0.1		TON	HAY MULCH	651.25				
							10			10		CY	TOPSOIL	651.35				
							110			110		SY	GRUBBING MATERIAL	651.40				

PROJECT NAME: STOWE
PROJECT NUMBER: BRF 0235 (11)

FILE NAME: s87e052forms.dgn
PROJECT LEADER: C. CARLSON
DESIGNED BY: D. PETERSON
QUANTITY SHEET 2

PLOT DATE: 28-JUL-2014
DRAWN BY: M. LONGSTREET
CHECKED BY: J. LACROIX
SHEET 7 OF 64

STATE OF VERMONT
AGENCY OF TRANSPORTATION

QUANTITY SHEET 3

| SUMMARY OF ESTIMATED QUANTITIES | | |

STATE OF VERMONT
AGENCY OF TRANSPORTATION

BRIDGE QUANTITY SHEET 1

| SUMMARY OF BRIDGE QUANTITIES | | |

GENERAL INFORMATION

SYMBOLOGY LEGEND NOTE

THE SYMBOLOGY ON THIS SHEET IS INTENDED TO COVER STANDARD CONVENTIONAL SYMBOLOGY. THE SYMBOLOGY IS USED FOR EXISTING & PROPOSED FEATURES WITH HEAVIER LINEWEIGHT, IN COMBINATION WITH PROJECT ANNOTATION, AS NOTED ON PROJECT PLAN SHEETS. THIS LEGEND SHEET COVERS THE BASICS. SYMBOLOGY ON PLANS MAY VARY, PLAN ANNOTATIONS AND NOTES SHOULD BE USED TO CLARIFY AS NEEDED.

R.O.W. ABBREVIATIONS (CODES) & SYMBOLS

POINT	CODE	DESCRIPTION
	CH	CHANNEL EASEMENT
	CONST	CONSTRUCTION EASEMENT
	CUL	CULVERT EASEMENT
	D&C	DISCONNECT & CONNECT
	DIT	DITCH EASEMENT
	DR	DRAINAGE EASEMENT
	DRIVE	DRIVEWAY EASEMENT
	EC	EROSION CONTROL
	HWY	HIGHWAY EASEMENT
	I&M	INSTALL & MAINTAIN EASEMENT
	LAND	LANDSCAPE EASEMENT
	R&RES	REMOVE & RESET
	R&REP	REMOVE & REPLACE
	SR	SLOPE RIGHT
	UE	UTILITY EASEMENT
	(P)	PERMANENT EASEMENT
	(T)	TEMPORARY EASEMENT
■	BNDNS	BOUND SET
⧈	BNDNS	BOUND TO BE SET
●	IPNS	IRON PIN SET
◎	IPNS	IRON PIN TO BE SET
⊠	CALC	EXISTING ROW POINT
○	PROW	PROPOSED ROW POINT
[LENGTH]		LENGTH CARRIED ON NEXT SHEET

COMMON TOPOGRAPHIC POINT SYMBOLS

POINT	CODE	DESCRIPTION
	APL	BOUND APPARENT LOCATION
	BM	BENCHMARK
	BND	BOUND
	CB	CATCH BASIN
	COMB	COMBINATION POLE
	DITHR	DROP INLET THROATED DNC
	EL	ELECTRIC POWER POLE
	FPOLE	FLAGPOLE
	GASFIL	GAS FILLER
	GP	GUIDE POST
	GSO	GAS SHUT OFF
	GUY	GUY POLE
	GUYW	GUY WIRE
	GV	GATE VALUE
	H	TREE HARDWOOD
	HCTRL	CONTROL HORIZONTAL
	HVCTRL	CONTROL HORIZ. & VERTICAL
	HYD	HYDRANT
	IP	IRON PIN
	IPIPE	IRON PIPE
	LI	LIGHT - STREET OR YARD
	MB	MAILBOX
	MH	MANHOLE (MH)
	MM	MILE MARKER
	PM	PARKING METER
	PMK	PROJECT MARKER
	POST	POST STONE/WOOD
	RRSIG	RAILROAD SIGNAL
	RRSL	RAILROAD SWITCH LEVER
	S	TREE SOFTWOOD
	SAT	SATELLITE DISH
	SHRUB	SHRUB
	SIGN	SIGN
	STUMP	STUMP
	TEL	TELEPHONE POLE
	TIE	TIE
	TSIGN	SIGN W/DOUBLE POST
	VCTRL	CONTROL VERTICAL
	WELL	WELL
	WSO	WATER SHUT OFF

THESE ARE COMMON VAOT SURVEY POINT SYMBOLS FOR EXISTING FEATURES, ALSO USED FOR PROPOSED FEATURES WITH HEAVIER LINEWEIGHT, IN COMBINATION WITH PROPOSED ANNOTATION.

PROPOSED GEOMETRY CODES

CODE	DESCRIPTION
PC	POINT OF CURVATURE
PI	POINT OF INTERSECTION
CC	CENTER OF CURVE
PT	POINT OF TANGENCY
PCC	POINT OF COMPOUND CURVE
PRC	POINT OF REVERSE CURVE
POB	POINT OF BEGINNING
POE	POINT OF ENDING
STA	STATION PREFIX
AH	AHEAD STATION SUFFIX
BK	BACK STATION SUFFIX
D	CURVE DEGREE OF (100FT)
R	CURVE RADUIS OF
T	CURVE TANGENT LENGTH
L	CURVE LENGTH OF
E	CURVE EXTERNAL DISTANCE

UTILITY SYMBOLOGY

UNDERGROUND UTILITIES

- UTILITY (GENERIC-UNKNOWN)
- UT — TELEPHONE
- UE — ELECTRIC
- UC — CABLE (TV)
- UEC — ELECTRIC+CABLE
- UET — ELECTRIC+TELEPHONE
- UCT — CABLE+TELEPHONE
- UECT — ELECTRIC+CABLE+TELEP.
- G — GAS LINE
- W — WATER LINE
- S — SANITARY SEWER (SEPTIC)

ABOVE GROUND UTILITIES (AERIAL)

- UTILITY (GENERIC-UNKNOWN)
- T — TELEPHONE
- E — ELECTRIC
- C — CABLE (TV)
- EC — ELECTRIC+CABLE
- ET — ELECTRIC+TELEPHONE
- AER E&T — ELECTRIC+TELEPHONE
- CT — CABLE+TELEPHONE
- ECT — ELECTRIC+CABLE+TELEP.
- UTILITY POLE GUY WIRE

PROJECT CONSTRUCTION SYMBOLOGY

PROJECT DESIGN & LAYOUT SYMBOLOGY

- CZ — CLEAR ZONE
- PLAN LAYOUT MATCHLINE

PROJECT CONSTRUCTION FEATURES

- TOP OF CUT SLOPE
- TOE OF FILL SLOPE
- STONE FILL
- BOTTOM OF DITCH ℄
- CULVERT PROPOSED
- STRUCTURE SUBSURFACE
- PDF — PDF — PROJECT DEMARCATION FENCE
- BF — BF — BARRIER FENCE
- TREE PROTECTION ZONE (TPZ)
- STRIPING LINE REMOVAL
- SHEET PILES

CONVENTIONAL BOUNDARY SYMBOLOGY

BOUNDARY LINES

- TOWN LINE — TOWN BOUNDARY LINE
- COUNTY LINE — COUNTY BOUNDARY LINE
- STATE LINE — STATE BOUNDARY LINE
- PROPOSED STATE R.O.W. (LIMITED ACCESS)
- PROPOSED STATE R.O.W.
- STATE ROW (LIMITED ACCESS)
- STATE ROW
- TOWN ROW
- PERMANENT EASEMENT LINE (P)
- TEMPORARY EASEMENT LINE (T)
- SURVEY LINE
- P/L — PROPERTY LINE (P/L)
- SR SR SR — SLOPE RIGHTS
- 6F — 6F — 6F PROPERTY BOUNDARY
- 4F — 4F — 4F PROPERTY BOUNDARY
- HAZ — HAZ — HAZARDOUS WASTE

EPSC LAYOUT PLAN SYMBOLOGY

EPSC MEASURES

- FILTER CURTAIN
- SILT FENCE
- SILT FENCE WOVEN WIRE
- CHECK DAM
- DISTURBED AREAS REQUIRING RE-VEGETATION
- EROSION MATTING

ENVIRONMENTAL RESOURCES

- WETLAND BOUNDARY
- RIPARIAN BUFFER ZONE
- WETLAND BUFFER ZONE
- SOIL TYPE BOUNDARY
- T&E — THREATENED & ENDANGERED SPECIES
- HAZ — HAZ — HAZARDOUS WASTE AREA
- AG — AGRICULTURAL LAND
- HABITAT — FISH & WILDLIFE HABITAT
- FLOOD PLAIN — FLOOD PLAIN
- OHW — ORDINARY HIGH WATER (OHW)
- STORM WATER
- USDA FOREST SERVICE LANDS
- WILDLIFE HABITAT SUIT/CONN

ARCHEOLOGICAL & HISTORIC

- ARCH — ARCHEOLOGICAL BOUNDARY
- HISTORIC DIST — HISTORIC DISTRICT BOUNDARY
- HISTORIC — HISTORIC AREA
- Ⓗ HISTORIC STRUCTURE

CONVENTIONAL TOPOGRAPHIC SYMBOLOGY

EXISTING FEATURES

- ROAD EDGE PAVEMENT
- ROAD EDGE GRAVEL
- DRIVEWAY EDGE
- DITCH
- FOUNDATION
- FENCE (EXISTING)
- FENCE WOOD POST
- FENCE STEEL POST
- GARDEN
- ROAD GUARDRAIL
- RAILROAD TRACKS
- CULVERT (EXISTING)
- STONE WALL
- WALL
- WOOD LINE
- BRUSH LINE
- HEDGE
- BODY OF WATER EDGE
- LEDGE EXPOSED

PROJECT NAME: STOWE
PROJECT NUMBER: BRF 0235 (11)

FILE NAME: s87e052forms.dgn
PROJECT LEADER: C. CARLSON
DESIGNED BY: D. PETERSON
CONVENTIONAL SYMBOLOGY LEGEND

PLOT DATE: 28-JUL-2014
DRAWN BY: M. LONGSTREET
CHECKED BY: J. LACROIX
SHEET 10 OF 64

GPS CONTROL POINTS

COTTAGE

BRASS SURVEY DISK

NORTH = 720366.318
EAST = 1583870.117
ELEV. = 766.304

DESCRIBED BY VERMONT AGENCY OF TRANSPORTATION 1996 (DJM) GENERAL LOCATION - THE STATION IS LOCATED IN THE TOWN OF STOWE, 1.6 MI (2.6 KM) NORTHWEST OF STOWE VILLAGE, 8.2 MI (13.2 KM) SOUTHWEST OF MORRISVILLE, AND 9.9 MI (15.9 KM) NORTH NORTHEAST OF WATERBURY. TO REACH FROM THE JUNCTION OF VERMONT ROUTE 100 AND VERMONT ROUTE 108 IN STOWE VILLAGE, PROCEED NORTHERLY ALONG ROUTE 108 FOR 2.0 MI (3.2 KM) TO COTTAGE CLUB ROAD (TH 29) ON THE RIGHT. PROCEED NORTHEASTERLY ALONG COTTAGE CLUB ROAD FOR 0.1 MI (0.2 KM) TO THE MARK ON THE RIGHT. THE MARK IS A STATE OF VERMONT SURVEY DISK SET IN THE TOP OF A CONCRETE MONUMENT 30 CM IN DIAMETER, FLUSH WITH THE GROUND SURFACE. IT IS LOCATED 128 FT (39.0 M) NORTHEAST OF UTILITY POLE 1, 88.5 FT (27.0 M) SOUTHWEST OF UTILITY POLE 3, 36 FT (11.0 M) SOUTHEAST OF A CHAINLINK FENCE, 18.5 FT (5.6 M) SOUTHEAST OF THE CENTERLINE OF COTTAGE CLUB ROAD (TH 29), AND 3 FT (0.9 M) NORTHWEST OF A FIBERGLASS WITNESS POST. OWNERSHIP IS THE TOWN OF STOWE.

VILLAGE GREEN

BRASS SURVEY DISK

NORTH = 720026.656
EAST = 1585800.072
ELEV. = 750.852

DESCRIBED BY VERMONT AGENCY OF TRANSPORTATION 1996 (DJM) GENERAL LOCATION - THE STATION IS LOCATED IN THE TOWN OF STOWE, 1.2 MI (1.9 KM) NORTHWEST OF STOWE VILLAGE, 8.1 MI (13.0 KM) SOUTHWEST OF MORRISVILLE, AND 9.8 MI (15.8 KM) NORTH NORTHEAST OF WATERBURY. TO REACH FROM THE JUNCTION OF VERMONT ROUTE 100 AND VERMONT ROUTE 108 IN STOWE VILLAGE, PROCEED NORTHERLY ALONG ROUTE 108 FOR 1.7 MI (2.7 KM) TO CAPE COD ROAD (TH 31) ON THE RIGHT. TURN RIGHT AND GO NORTHEAST ALONG CAPE COD ROAD FOR 0.15 MI (0.24 KM) TO THE MARK ON THE RIGHT. THE MARK IS A STATE OF VERMONT SURVEY DISK SET IN THE TOP OF A CONCRETE MONUMENT 30 CM IN DIAMETER FLUSH WITH THE GROUND SURFACE. IT IS LOCATED 176.5 FT (53.8 M) SOUTHWEST OF THE CENTERLINE OF A PAVED DRIVE TO VILLAGE GREEN CONDOMINIUMS, 66.5 FT (20.3 M) NORTHEAST OF UTILITY POLE 3, 31.5 FT (9.6 M) NORTH OF A HIGHWAY SIGN (SPEED LIMIT 35), 14.5 FT (4.4 M) SOUTHEAST OF THE CENTERLINE OF CAPE COD ROAD (TH 31), AND 1FT (0.3 M) WEST OF A FIBERGLASS WITNESS POST. OWNERSHIP IS THE STATE OF VERMONT.

TRAVERSE TIES

HVCTRL #1

NORTH = 719869.481
EAST = 1587749.554
ELEV. = 733.740

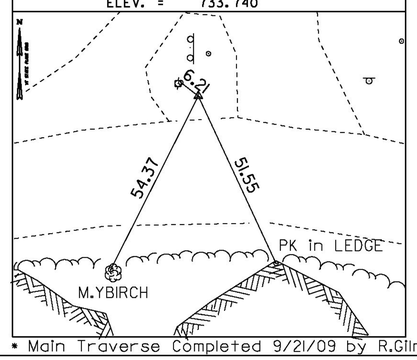

HVCTRL #2

NORTH = 719664.694
EAST = 1588244.397
ELEV. = 738.050

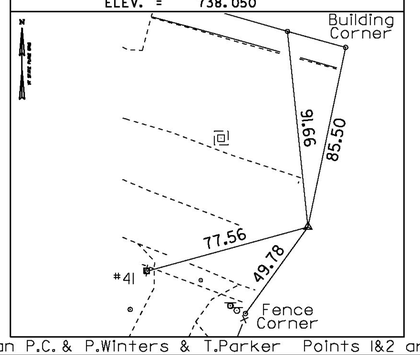

HVCTRL #8

NORTH = 717140.414
EAST = 1591116.847
ELEV. = 731.281

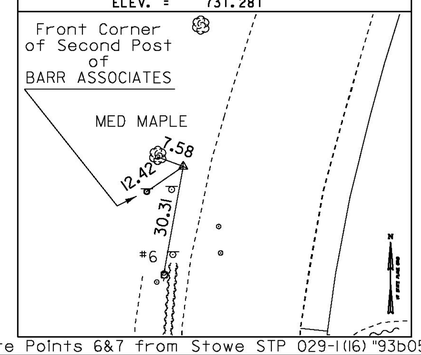

HVCTRL #9

NORTH = 716500.060
EAST = 1591455.075
ELEV. = 714.680

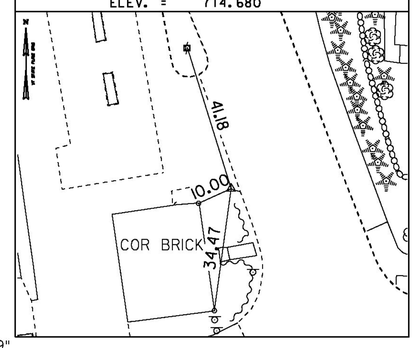

HVCTRL #10

NORTH = 716464.560
EAST = 1591588.010
ELEV. = 718.180

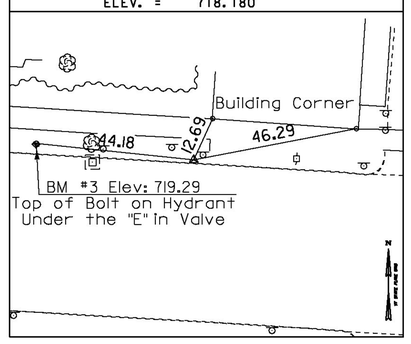

* Main Traverse Completed 9/21/09 by R.Gilman P.C. & P.Winters & T.Parker Points 1&2 are Points 6&7 from Stowe STP 029-1(16) "93b059"

ALIGNMENT TIES

NORTH =	NORTH =	NORTH =	NORTH =	NORTH =
EAST =	EAST =	EAST =	EAST =	EAST =
ELEV. =	ELEV. =	ELEV. =	ELEV. =	ELEV. =

DATUM

VERTICAL NAVD 88
HORIZONTAL NAD 83(96)
ADJUSTMENT Compass

PROJECT NAME: STOWE
PROJECT NUMBER: BRF 0235 (11)

FILE NAME: 87e052\survey\x87e052ti.dg
PROJECT LEADER: C. CARLSON
DESIGNED BY: D. PETERSON
TIE SHEET

PLOT DATE: 28-JUL-2014
DRAWN BY: R. BULLOCK
CHECKED BY: J. LACROIX
SHEET 11 OF 64

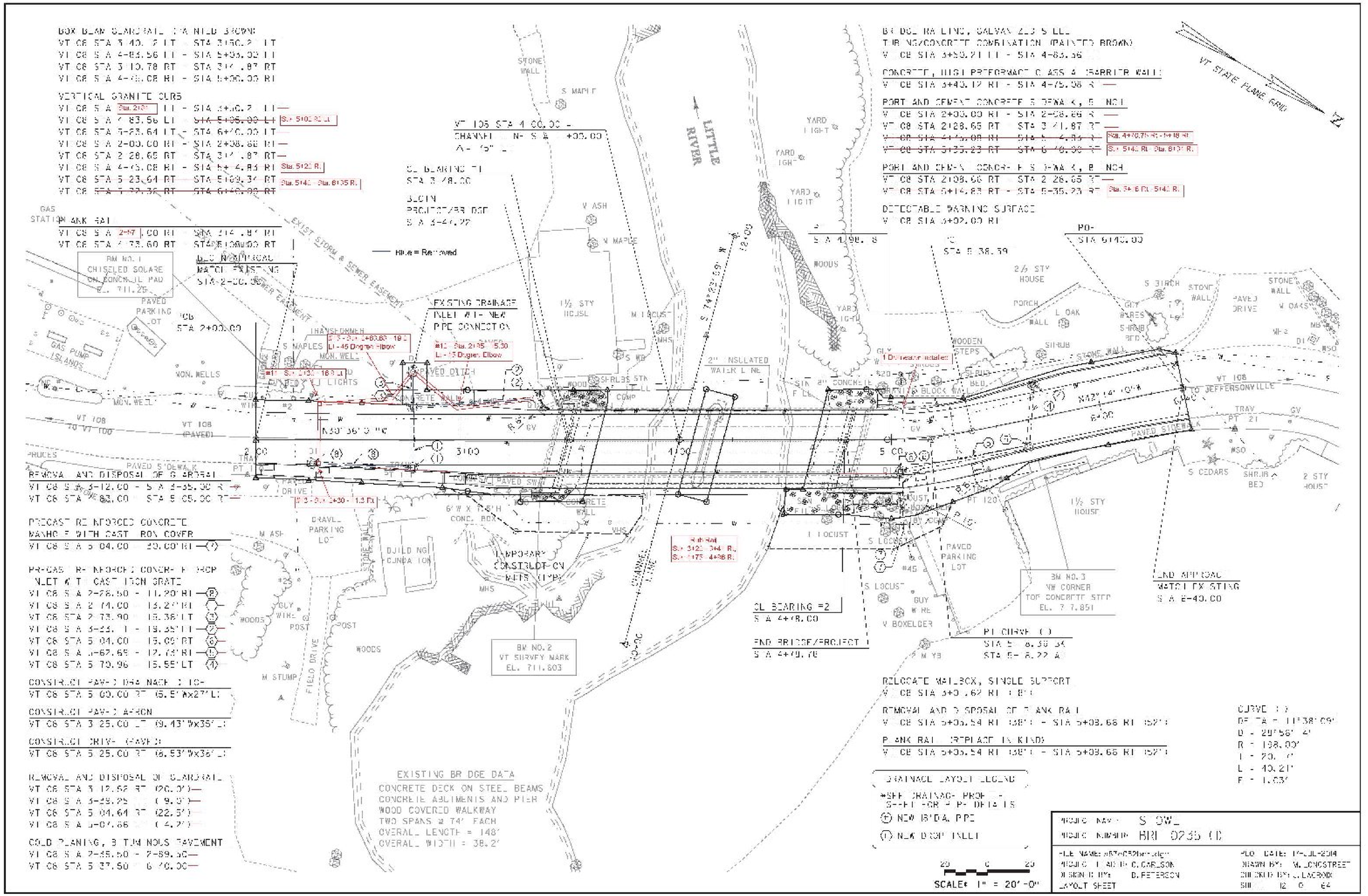
BOX BEAM GUARDRAIL STA NILD SHOWN
VT 08 STA 5 40. 2 LT - STA 3150.2 LT
VT 08 STA 4-85.56 LT - STA 5+05.00 LT
VT 08 STA 3 10.78 RT - STA 3+ .87 RT
VT 08 STA 4-75.08 RT - STA 5+00.00 RT
VERTICAL GRANITE CURB
VT 08 STA Sta. 2+37 LT - STA 3+00.2 LT
VT 08 STA 4 83.56 LT - STA 5+05.00 LT
VT 08 STA 5-23.64 LT - STA 6+40.00 LT
VT 08 STA 2-00.00 RT - STA 2+08.68 RT
VT 08 STA 2 28.65 RT - STA 3+ .87 RT
VT 08 STA 4-75.08 RT - STA 5+ 4.84 RT
VT 08 STA 5 23.64 RT - STA 5+09.34 RT
VT 08 STA 7 32.36 RT - STA 6+40.00 RT
BANK RAIL
VT 08 STA 2+57.00 RT - STA 2+ .87 RT
VT 08 STA 4 78.60 RT - STA 5+08.00 RT
PM NO. 1
CHISELED SQUARE
ON CONCRETE PAD
EL. 711.25
PAVED PARKING LOT
GAS PUMP ISLANDS
GAS STATION
EXIST STORM & SEWER EASEMENT
SEWER EASEMENT
TRANSFORMER
MON. WELLS
MON. WELL
VT 108
TO VT 100
VT 108 (PAVED)
SPRUCES
PAVED SIDEWALK
REMOVAL AND DISPOSAL OF GUARDRAIL
VT 08 STA 3-12.00 - STA 3+35.00 RT
VT 08 STA 4+83.00 - STA 5+05.00 RT
PRECAST REINFORCED CONCRETE
HANDHOLE WITH CAST IRON COVER
VT 08 STA 3+04.00 - 20.00' RT
PRECAST REINFORCED CONCRETE DROP INLET W/ CAST IRON GRATE
VT 08 STA 2+78.50 - 11.20' RT
VT 08 STA 2+74.00 - 15.27' RT
VT 08 STA 2+73.90 - 15.36' LT
VT 08 STA 3+22. 1 - 15.35' LT
VT 08 STA 3+04.00 - 15.00' RT
VT 08 STA 3+62.65 - 12.73' RT
VT 08 STA 3+70.96 - 15.55' LT
CONSTRUCT PAVED DRAINAGE DITCH
VT 08 STA 3+00.00 RT 15.5'Wx27'L
CONSTRUCT PAVED APRON
VT 08 STA 3+25.00 LT 9.43'Wx35'L
CONSTRUCT DRIVE (PAVED)
VT 08 STA 3+25.00 RT 8.53'Wx36'L
REMOVAL AND DISPOSAL OF GUARDRAIL
VT 08 STA 3+12.50 RT (20.0')
VT 08 STA 3+28.25 (9.5')
VT 08 STA 3+04.64 RT (22.5')
VT 08 STA 3+07.86 (4.2')
COLD PLANING, BITUMINOUS PAVEMENT
VT 08 STA 2+55.50 - 2+89.00
VT 08 STA 3+37.50 - 3+70.00
VT 105 STA 4+00.00 -
CHANNEL N= S.A. +00.00
Δ= 5°
CL BEARING =1
STA 3+48.00
SLOPE PROTECTION RIP RAP
S.A. 3+47.99
Hole = Removed
EXISTING DRAINAGE INLET W/ NEW PIPE CONNECTION
#12 - Sta. 2+35 - 5.30 Lt - 45 Degree Elbow
#11 - Sta. 2+30 - 18.8 Lt - 45 Degree Elbow
CONCRETE WALL
CONCRETE APRON
DRIVE
PAVED DITCH
CURVED WING WALLS
N30° 36' 0 "W
3100
4100
5 00
6'W X 7.5'H CONC. BOX
TEMPORARY CONSTRUCTION WETS TYP.
BUILDING FOUNDATION
DRAVEL PARKING LOT
FIELD DRIVE
WOODS
M ASH
M STUMP
BM NO. 2
VT SURVEY MARK
EL. 711.803
CL BEARING =2
S.A. 4+78.00
END BRIDGE/PROJECT 1
S.A. 4+90.78
EXISTING BRIDGE DATA
CONCRETE DECK ON STEEL BEAMS
CONCRETE ABUTMENTS AND PIER
WOOD COVERED WALKWAY
TWO SPANS @ 74' EACH
OVERALL LENGTH = 148'
OVERALL WIDTH = 38.2'
BRIDGE RAILING, GALVANIZED STEEL
TUBULAR/CONCRETE COMBINATION (PAINTED BROWN)
VT 08 STA 3+50.21 LT - STA 4+86.36
CONCRETE, HIGH PERFORMANCE CLASS A (BARRIER WALL)
VT 08 STA 3+43.12 RT - STA 4+75.08 RT
PORTLAND CEMENT CONCRETE SIDEWALK, 6 INCH
VT 08 STA 2+00.00 RT - STA 2+08.68 RT
VT 08 STA 2128.65 RT - STA 3+ 1.87 RT
VT 08 STA 4+75.08 RT - STA 5+ 4.84 RT
VT 08 STA 5+25.23 RT - STA 6+40.00 RT
PORTLAND CEMENT CONCRETE SIDEWALK, 8 INCH
VT 08 STA 2108.68 RT - STA 2 28.65 RT
VT 08 STA 5+14.83 RT - STA 5+35.23 RT
DETECTABLE WARNING SURFACE
VT 08 STA 3+02.00 RT
LITTLE RIVER
S. MAPLE
STONE WALL
YARD LIGHT
W ASH
W MAPLE
1½ STY HOUSE
M LOCUST
S 14°23'59" W
18.00
S.A. 4+98.8
STA 5+38.39
2" INSULATED WATER LINE
STA 4+ CONCRETE F.L.
WOODS
S-RUBS STA
COMP
1 Downspout Installed
2½ STY HOUSE
PORCH
L OAK
WALL
S BIRCH
STONE WALL
PAVED DRIVE
W OAKS
WOODEN STEPS
SHRUB BED
S CEDARS
2 STY HOUSE
VT 108 TO JEFFERSONVILLE
N42° 14' 10"W
6.00
PAVED SIDEWALK
PT 120
1½ STY HOUSE
S LOCUST
#45
GUY WIRE
W BOXELDER
PAVED PARKING LOT
BM NO. 3
VW CORNER
TOP CONCRETE STEP
EL. 7 7.851
END APPROACH
MATCH EX STNG
S.A. 5+43.00
PI CURVE 1
STA 5+ 8.38 34
STA 5+ 8.22 A
RELOCATE MAILBOX, SINGLE SUPPORT
VT 08 STA 3+01.62 RT
REMOVAL AND DISPOSAL OF BANK RAIL
VT 08 STA 3+03.54 RT (68') - STA 3+08.68 RT (52')
BANK RAIL, REPLACE IN KIND
VT 08 STA 3+03.54 RT (68') - STA 3+08.68 RT (52')
CURVE 1
DELTA = 11°38'09"
D = 29°56' 4"
R = 198.00'
T = 20. 7'
L = 40.21'
E = 1.63'
DRAINAGE LAYOUT LEGEND
*SEE DRAINAGE PROFILE SHEET FOR PIPE DETAILS
NEW RCPDA PIPE
NEW DROP INLET
20 0 20
SCALE: 1" = 20'-0"
PROJECT NAME: S OWL
PROJECT NUMBER: BRI 0235 (1)
FILE NAME: s:\structures\bridge\...
PROJECT ENGINEER: D. CARLSON
DESIGNED BY: B. PETERSON
LAYOUT SHEET
PLOT DATE: 17-JUL-2014
DRAWN BY: M. JONESTREET
CHECKED BY: J. LAMROUX
SHEET 12 OF 64

VT108_Proposed

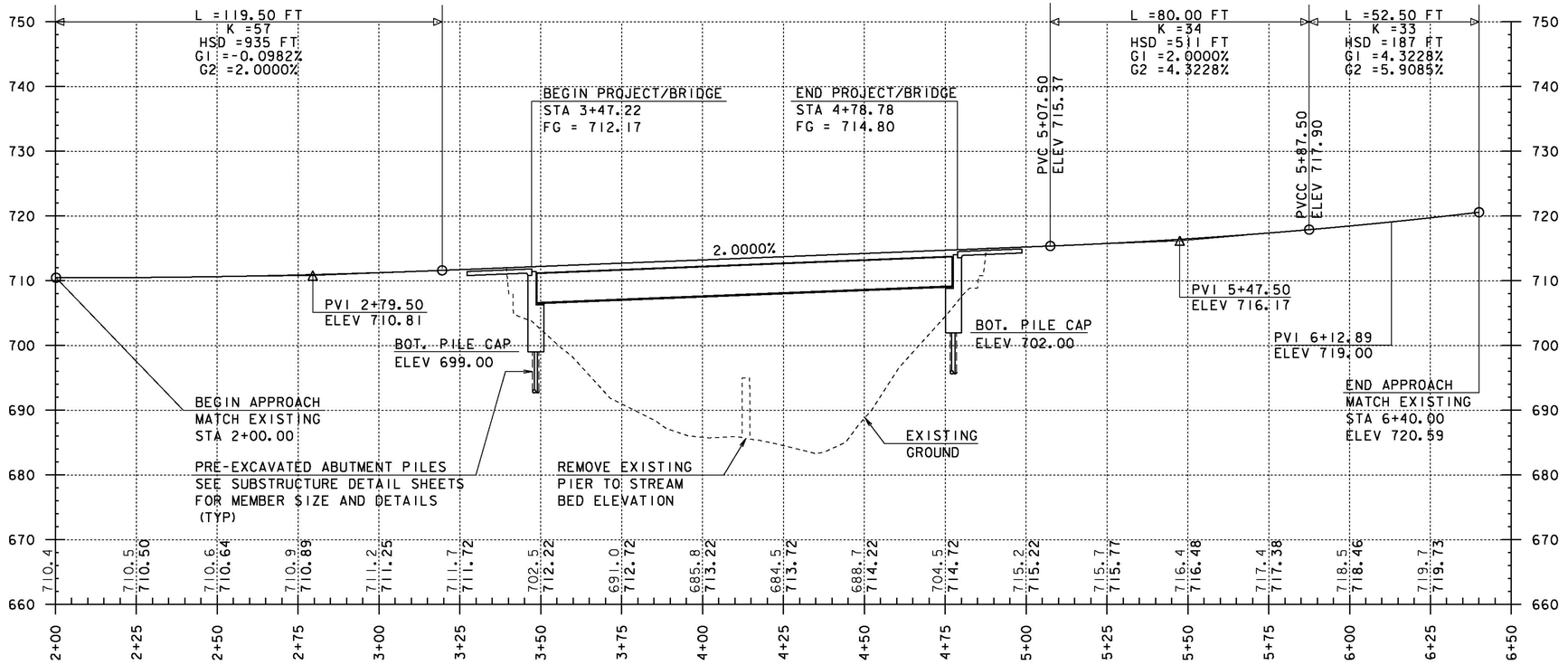

PROFILE ALONG VT 108

HORIZONTAL SCALE: 1" = 20'-0"
VERTICAL SCALE: 1" = 10'-0"

NOTE:

ELEVATIONS SHOWN TO THE NEAREST TENTH ARE EXISTING GROUND ALONG PROPOSED CENTERLINE.

ELEVATIONS SHOWN TO THE NEAREST HUNDREDTH ARE FINISH GRADES ALONG PROPOSED CENTERLINE.

PROJECT NAME:	STOWE
PROJECT NUMBER:	BRF 0235 (11)
FILE NAME: s87e052pro.dgn	PLOT DATE: 28-JUL-2014
PROJECT LEADER: C. CARLSON	DRAWN BY: G. ROY
DESIGNED BY: D. PETERSON	CHECKED BY: M. LONGSTREET
VT 108 PROFILE	SHEET 13 OF 64

VT STATE PLANE GRID

VT 108 STA 4+00.00 =
CHANNEL LINE STA 11+00.00
△ = 75° LT

TEMP SERVICE
LINE
DE-ENERGIZE
LEAVE IN PLACE
(HARD GUARD)

REMOVE SERVICE LINES
DURING CONSTRUCTION

ABANDONED
WATERLINE

TEMP UTILITY AND
CONST. ACCESS BRIDGE

10" TEMP WATER

EXISTING ELECTRIC
CONDUIT TO COVERED
WALKWAY LIGHTING

GUY WIRE TO BE
REMOVED ONLY WHEN
NECESSARY (BY OTHERS)

TEMPORARY UNDERGROUND SERVICE
3 - 2" DIA CONDUITS

DE-ENERGIZE BRIDGE
WALK SERVICE LINE
AND REMOVE

NOTE:
SEE THE UTILITY SPECIAL PROVISIONS FOR
ADDITIONAL INFORMATION AND REQUIREMENTS.

SCALE: 1" = 20'-0"

PROJECT NAME: STOWE	
PROJECT NUMBER: BRF 0235 (11)	
FILE NAME: s87e052bdr_util.dgn	PLOT DATE: 29-JUL-2014
PROJECT LEADER: C. CARLSON	DRAWN BY: M. LONGSTREET
DESIGNED BY: D. PETERSON	CHECKED BY: J. LACROIX
UTILITY LAYOUT	SHEET 14 OF 64

INLET #4 - PIPE #4 / INLET #5 - PIPE #5 / INLET #6 - PIPE #6 / INLET #7 - PIPE #7

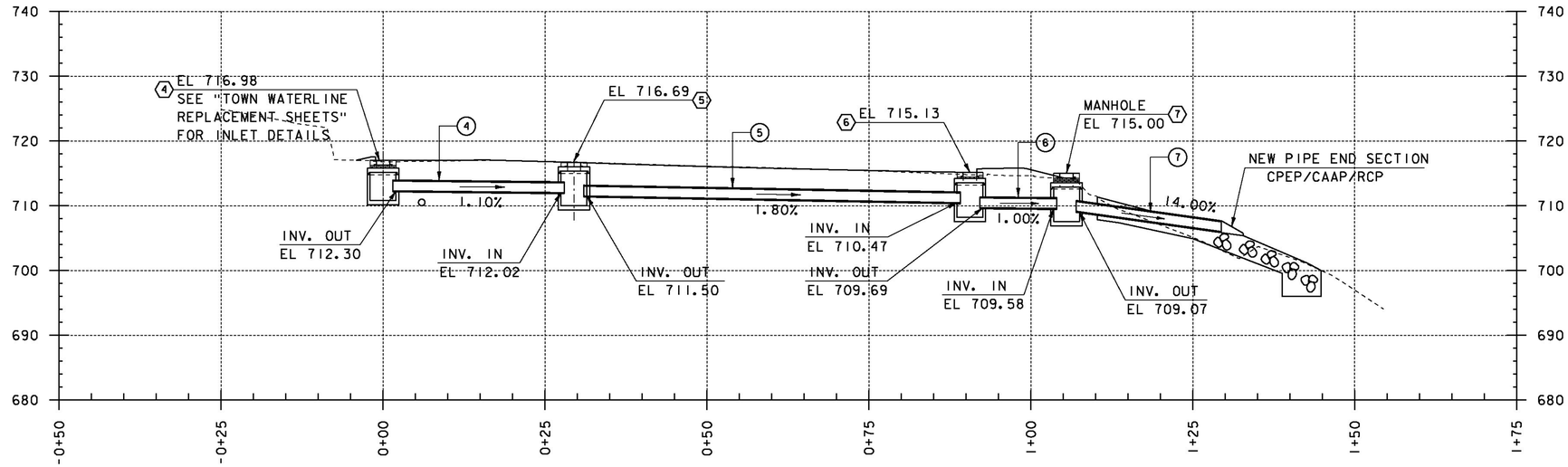

④—NEW CPEP/CAAP/RCP
DIAMETER = 18"
LENGTH = 25'-6"

⑤—NEW CPEP/CAAP/RCP
DIAMETER = 18"
LENGTH = 57'-2"

⑥—NEW CPEP/CAAP/RCP
DIAMETER = 18"
LENGTH = 11'-0"

⑦—NEW CPEP/CAAP/RCP
DIAMETER = 18"
LENGTH = 22'-0"

④—NEW CB

⑤—NEW CB

⑥—NEW CB

⑦—NEW MANHOLE (MH)

INLET #2 - PIPE #2 / INLET #3 - PIPE #3 / TO EXISTING INLET

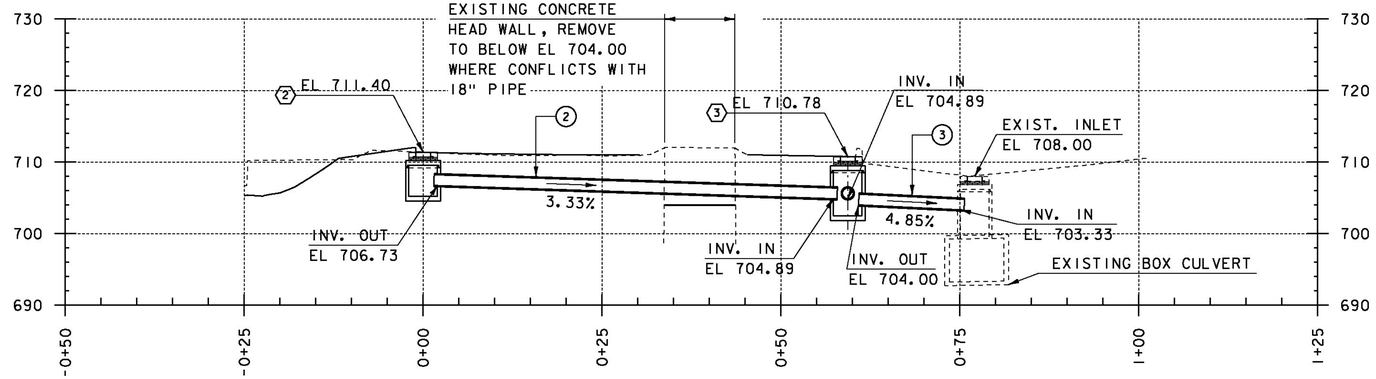

②—NEW CPEP/CAAP/RCP
DIAMETER = 18"
LENGTH = 55'-5"

③—NEW CPEP/CAAP/RCP
DIAMETER = 18"
LENGTH = 13'-9"

②—NEW CB

③—NEW CB

INLET #8 - PIPE #8 / INLET #1 - PIPE #1 / INLET #3 - PIPE #3 / TO EXISTING INLET

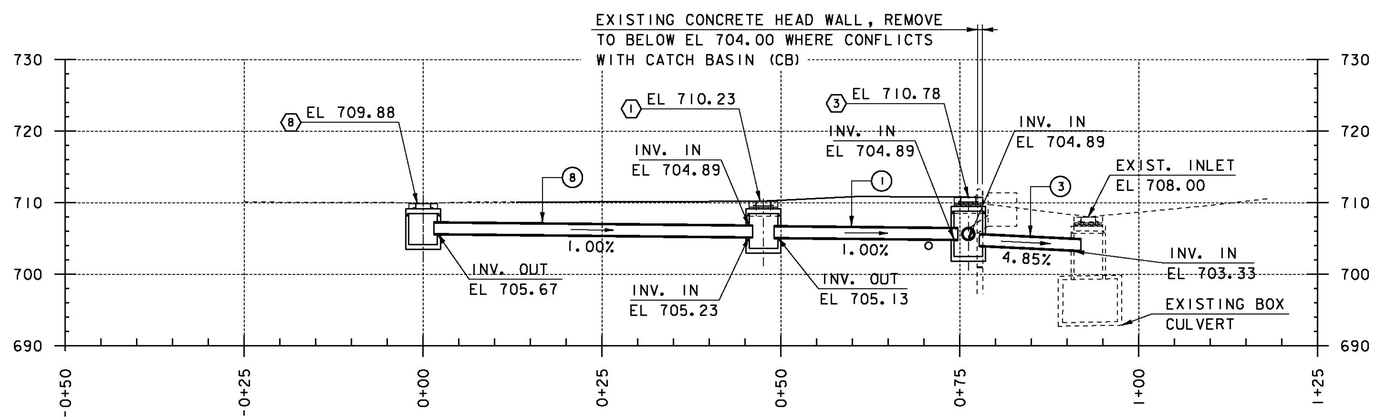

①—NEW CPEP/CAAP/RCP
DIAMETER = 18"
LENGTH = 24'-8"

③—NEW CPEP/CAAP/RCP
DIAMETER = 18"
LENGTH = 13'-9"

⑧—NEW CPEP/CAAP/RCP
DIAMETER = 18"
LENGTH = 44'-6"

①—NEW CB

③—NEW CB

⑧—NEW CB

(#) NEW PIPE: DIA 18"
TYPE: OPTION PIPE

(#) NEW DROP INLET (CB) OR MANHOLE (MH)

NOTES:
1) SEE "LAYOUT SHEET" FOR CB STATION OFFSET LOCATIONS FROM VT108 ML.

PROJECT NAME:	STOWE
PROJECT NUMBER:	BRF 0235 (11)
FILE NAME: s87e052xsl.dgn	PLOT DATE: 28-JUL-2014
PROJECT LEADER: C. CARLSON	DRAWN BY: D. KARABEGOVIC
DESIGNED BY: D. PETERSON	CHECKED BY: M. LONGSTREET
PIPE PROFILES	SHEET 15 OF 64

STATE OF VERMONT
AGENCY OF TRANSPORTATION

DRAINAGE DETAIL SHEET

STATION	STATION	POS.	ASKEW	INLET/OUTLET TYPE		DITCH		PIPE ARCH			PIPE		ALLOWABLE OPTIONS						PIPE ELBOW	ES	CB	PRCC	DI	DEPTH DI	CONC CLASS B	REINF STEEL	DI GRATE	CHAN ELEV	CRM	TRENCH EXCAVATION		COMM EXC	UNC CHAN EXC	STRUCT EXCAV	GRAN BKFILL STRUCT	GRAN BORR	EROS MATT	STONE FILL		MARKER POSTS				REMARKS
			NO. DEG.	INLET	OUTLET	IN	OUT	SPAN IN	RISE IN	L FT	D IN	L FT	PCCSP TH	CAAP TH	RCP CL	CSP TH	CPEP SL	PCCSP PI TH	NO. DEG.	EA	EA			FT	CY	LBS	TYPE	EA	CY	EARTH CY	ROCK CY	CY	CY	CY	CY	CY	SY	CY	TYPE	LT EA	RT EA			
2+26.50		RT																				X	5.71			D			17.23	-	-	-	-	12.23	-	-	-	-	-	-			4'-0" DIAMETER PRECAST CB (CB8)
2+26.50	2+74.00	RT		CB	CB						18	47.56		X	X		X												38.77	-	-	-	-	35.06	-	-	-	-	-	-			18" PIPE TO CONNECT TWO CB'S (PIPE 8)
2+74.00		RT																				X	6.60			D			18.84	-	-	-	-	14.36	-	-	-	-	-	-			4'-0" DIAMETER PRECAST CB (CB1)
2+74.00	2+43.00	LT/RT		CB	CB						18	24.63		X	X		X												20.497	-	-	-	-	18.197	-	-	-	-	-	-			18" PIPE TO CONNECT TWO CB'S (PIPE 1)
3+33.11		LT																				X	6.17			D			17.755	-	-	-	-	13.568	-	-	-	-	-	-			4'-0" DIAMETER PRECAST CB (CB 2)
3+33.11	2+73.90	LT/LT		CB	CB						18	55.35		X	X		X												47.817	-	-	-	-	42.645	-	-	-	-	-	-			18" PIPE TO CONNECT TWO CB'S (PIPE 2)
2+73.90		LT																				X	8.28			D			22.469	-	-	-	-	16.85	-	-	-	-	-	-			4'-0" DIAMETER PRECAST CB (CB 3)
2+73.90	2+74.11	LT/LT		CB	CB						18	13.75		X	X		X												10.48	-	-	-	-	9.1942	-	-	-	-	-	-			18" PIPE TO CONNECT TWO CB'S (PIPE 3)
5+70.96		LT																				X	6.18			*			17.533	-	-	-	-	13.34	-	-	-	-	-	-			4'-0" DIAMETER PRECAST CB (CB 4) *SEE STORM DRAIN PROFILES AND DETAILS SHEET
5+70.96	5+62.69	LT/RT		CB	CB						18	25.47		X	X		X												17.745	-	-	-	-	15.367	-	-	-	-	-	-			18" PIPE TO CONNECT TWO CB'S (PIPE 4)
5+62.69		RT																				X	6.69			D			19.102	-	-	-	-	14.562	-	-	-	-	-	-			4'-0" DIAMETER PRECAST CB (CB 5)
5+62.69	5+04.00	RT/RT		CB	CB						18	57.13		X	X		X												44.402	-	-	-	-	39.066	-	-	-	-	-	-			18" PIPE TO CONNECT TWO CB'S (PIPE 5)
5+04.00		RT																				X	6.94			D			18.824	-	-	-	-	14.114	-	-	-	-	-	-			4'-0" DIAMETER PRECAST CB (CB 6)
5+04.00	5+04.00	RT/RT		CB	MH						18	10.91		X	X		X												6.07	-	-	-	-	5.0513	-	-	-	-	-	-			18" PIPE TO CONNECT CB TO MH (PIPE 6)
5+04.00		RT																				X	7.43						17.85	-	-	-	-	12.807	-	-	-	-	-	-			4'-0" DIAMETER PRECAST MH (MH 7) CAST IRON COVER
5+04.00	4+80.96	RT/RT		MH	STONE						18	21.95		X	X		X				X								4.0417	-	-	-	-	1.9752	-	-	-	-	-	-			18" PIPE FROM MH TO CHANNEL (PIPE 7) w/ END SECTION
								SUBTOTAL:		256.75												8								339.48					278.39									
								ROUNDING:		3.75																				0.52					1.61									
								TOTAL:		260.00												8								340.00					280.00									

PROJECT NAME: STOWE
PROJECT NUMBER: BRF 0235 (11)

FILE NAME: s87e052xsl.DGN
PROJECT LEADER: C. CARLSON
DESIGNED BY: D. PETERSON
DRAINAGE DETAILS

PLOT DATE: 28-JUL-2014
DRAWN BY: D. KARABEGOVIC
CHECKED BY: M. LONGSTREET
SHEET 16 OF 64

4" YELLOW LINE (DOUBLE) CL
VT108 STA 2+00.00- STA 6+40.00

4" WHITE LINE
VT108 STA 2+00.00 LT - STA 6+40.00 LT
VT108 STA 2+00.00 RT - STA 2+26.00 RT
VT108 STA 2+28.00 RT - STA 6+40.00 RT

CROSSWALK MARKING
VT108 3+02.00 15.5 RT - STA 3+06.00 15.5 LT

VT STATE PLANE GRID

N

R&S
R&S
N
STA 3+42.25 LT

VD-701
N
BRIDGE
2
VT-108
N
STATION 5+25.00 LT

2+00
3+00
4+00
5+00
6+00
6+40

R&S
R&S
N
STA 2+88.80 RT

VD-701
N
BRIDGE
2
VT 108
N
STATION 3+23.00 RT

EXISTING SIGNS

NEW SIGNS

EXISTING SIGNS
NEW SIGNS
N = NEW
R = REMOVE
RET = RETAIN
R&S = REMOVE AND SALVAGE

20 0 20
SCALE: 1" = 20'-0"

PROJECT NAME: STOWE
PROJECT NUMBER: BRF 0235 (11)

FILE NAME: s87e052tcs.dgn
PROJECT LEADER: C. CARLSON
DESIGNED BY: D. PETERSON
TRAFFIC SIGNS & STRIPING

PLOT DATE: 28-JUL-2014
DRAWN BY: D. KARABEGOVIC
CHECKED BY: J. LACROIX
SHEET 17 OF 64

STATE OF VERMONT
AGENCY OF TRANSPORTATION

TRAFFIC SIGN SUMMARY SHEET

MILEMARKER, STATION, OR SIGN NUMBER	SIGN LEGEND	SIGN DIMENSIONS			NEW & SALVAGED SIGNS				EXIST POST		NEW SIGN POSTS																				REMARKS	SIGN DETAIL	
		EA	WIDTH (in)	HEIGHT (in)	"A"	"B"	SALV SIGN	SALV TIS	RETAIN	SALVAGE	NO. OF POSTS	FLANGED CHANNEL lb/ft			SQUARE STEEL (in) lb/ft			ANCHOR	SLEEVE	TUBULAR ALUMINUM Ø (in) lb/ft			FOUNDATION	TUBULAR STEEL Ø (in) lb/ft				W-SHAPE STEEL FTG. SIZE		WEIGHT	POST SIZE	SIGN FRAME REQUIRED		DETAIL ON SHEET NUMBER	STD. SHEET NUMBER
												1.12	2.0	3.0	1.88	2.42	3.35			1.3	1.7	1.7		7.6	9.0	10.8	14.6	24"	30"					
											OPTION ITEMS																								
2+88.80 RT		1	30	30			1				1					15		X	X														WI1-2		SHS
3+42.25 LT		1	30	30			1				1					15		X	X														WI1-2		SHS
2+88.80 RT		1	24	12			1																										WI6-7P		SHS
3+42.25 LT		1	24	12			1																										WI6-7P		SHS
3+23.00 RT		1	6	8	0.33										8			X															VD-701		T-42
5+25.00 LT		1	6	8	0.33										8			X															VD-701		T-42

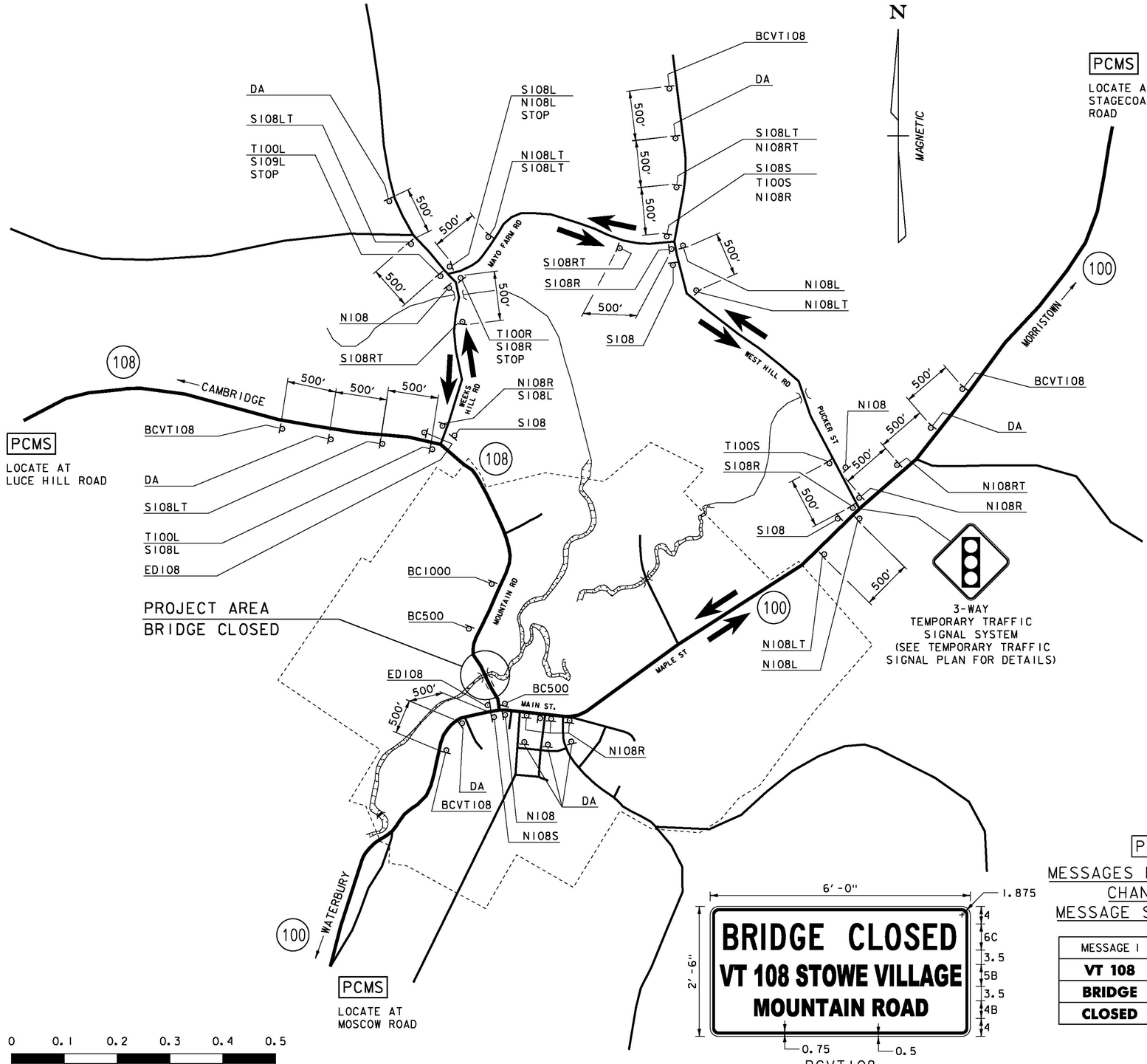



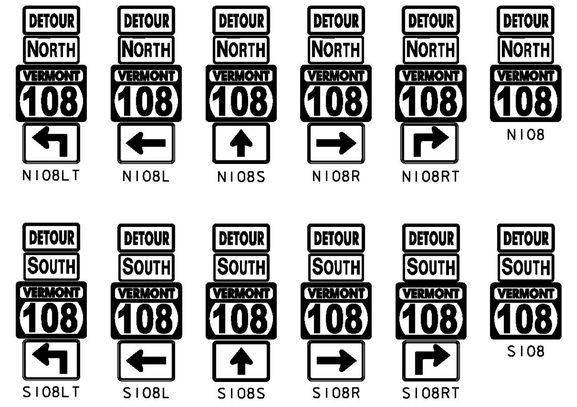

PCMS

MESSAGES FOR PORTABLE CHANGEABLE MESSAGE SIGNS (PCMS)

MESSAGE 1	MESSAGE 2
VT 108	****DATE****
BRIDGE	**THRU**
CLOSED	****DATE****

NOTES:

1. THE NUMBER OF TYPE III BARRICADES AND OTHER TRAFFIC CONTROL DEVICES SHOWN ARE FOR ILLUSTRATIVE PURPOSES ONLY. THE ACTUAL NUMBER REQUIRED ARE TO BE DETERMINED BASED ON INDIVIDUAL ROADWAY CLOSURE REQUIREMENTS.

2. PORTABLE CHANGEABLE MESSAGE SIGNS (PCMS) SHALL BE PLACED OFF THE EDGE OF THE ROADWAY, OUTSIDE THE CLEAR ZONE, BUT SHALL BE VISIBLE FROM THE ROADWAY. ANY VEGETATION THAT INTERFERES WITH VISIBILITY OF THE PCMS SHALL BE REMOVED. REMOVAL OF THE VEGETATION SHALL BE INCIDENTAL TO ITEM 641.15, "PORTABLE CHANGEABLE MESSAGE SIGN".

3. SEE CONTRACT DOCUMENTS FOR CLOSURE DATES.

PROJECT NAME: STOWE
PROJECT NUMBER: BRF 0235 (11)

FILE NAME: s87e052detour.dgn
PROJECT LEADER: C. CARLSON
DESIGNED BY: D. PETERSON
TRAFFIC DETOUR PLAN

PLOT DATE: 28-JUL-2014
DRAWN BY: M. LONGSTREET
CHECKED BY: J. LACROIX
SHEET 19 OF 64

VT STATE PLANE GRID

N

BRIDGE CLOSED
R11-2 MOUNTED ON TYPE III (MOD) BARRICADE

SIDEWALK CLOSED
R11-2 MOUNTED ON TYPE III (MOD) BARRICADE

LEGEND

- TYPE III BARRICADE
- TYPE III BARRICADE (MOD.)
- TEMPORARY TRAFIC BARRIER
- PCMS - PORTABLE CHANGEABLE MESSAGE SIGN

BRIDGE CLOSED
R11-2 MOUNTED ON TYPE III (MOD) BARRICADE

SIDEWALK CLOSED
R11-2 MOUNTED ON TYPE III (MOD) BARRICADE

2+00 3+00 4+00 5+00 6+00 6+40

NOTE:
TEMPORARY TRAFFIC BARRIER SHALL MEET THE REQUIREMENTS OF SECTION 621 AND WILL BE INCLUDED FOR PAYMENT UNDER CONTRACT ITEM 900.645 SPECIAL PROVISION (TRAFFIC CONTROL, ALL INCLUSIVE).
PORTABLE CHANGEABLE MESSAGE SIGNS WILL BE PAID SEPARATELY UNDER CONTRACT ITEM 641.15.

SCALE 1" = 30'-0"
30 0 30

PROJECT NAME: STOWE
PROJECT NUMBER: BRF 0235 (11)

FILE NAME: s87e052detour.dgn
PROJECT LEADER: C. CARLSON
DESIGNED BY: D. PETERSON
TRAFFIC CONTROL PLAN

PLOT DATE: 28-JUL-2014
DRAWN BY: M. LONGSTREET
CHECKED BY: J. LACROIX
SHEET 20 OF 64

LIST OF MAJOR EQUIPMENT

EQUIPMENT ITEM 678.40	QUANTITY
POWER METER ON STANCHION	1
BREAKER PANEL ON STANCHION	1
TRAFFIC SIGNAL CONTROLLER (NEMA TS2)	1
NEMA POLE MOUNTED CONTROLLER CABINET PAINTED FLAT BLACK WITH ANCILLARY CONTROL EQUIPMENT	1
WESTERN RED CEDAR OR SOUTHERN PINE WOODEN STRAIN POLE (SP-2)	1
ONE WAY, 3-SECTION, 12-INCH POLYCARBONATE MAST ARM MOUNTED LED TRAFFIC SIGNAL HEAD WITH TUNNEL VISORS AND 5" LOUVERED BACK-PLATES WITH ALL PIECES PAINTED FLAT BLACK	7
DETECTOR EXTENSION BRACKET	3
DETECTOR ASSEMBLY	3
DETECTION PROCESSOR CARD	3

TEMPORARY TRAFFIC SIGNAL SYSTEM
(VT-100 & WEST HILL ROAD)

WOODEN STRAIN POLE
STA 226+03 LT (SP-1)

POLE MOUNT CABINET/CONTROLLER
STA 226+03 LT (SP-1)

POWER STANCHION
STA 226+82 RT (SP-2)

CONTROLLER TIMING CHART

VT ROUTE 100 & WEST HILL ROAD								
		V100		W.H.		V100		
PHASE	1	2	3	4	5	6	7	8
TRAFFIC MOVEMENT		->		↓		<-		
MINIMUM GREEN		5		5		5		
MAXIMUM 1 GREEN		33		16		33		
MAXIMUM 2 GREEN		42		22		42		
MAXIMUM 3 GREEN		--		--		--		
YELLOW CLEARANCE		4.4		3.2		4.4		
ALL RED CLEARANCE		2.0		2.5		2.0		
VEH. EXTENSION		2		2		2		
RECALL MODE		SOFT		--		SOFT		

CONTROLLER TO RUN MAX 1 TIMINGS WHEN
VT-108 BRIDGE IS OPEN TO TRAFFIC

CONTROLLER TO RUN MAX 2 TIMINGS WHEN
VT-108 BRIDGE IS CLOSED TO TRAFFIC

CONTROLLER TO FLASH FROM
11:00 PM TO 6:00 AM

STA 222+50 NEW W3-3
REMOVE WHEN SIGNAL IS REMOVED

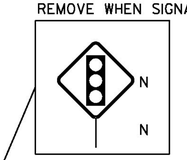

TEMPORARY 24 INCH STOP BAR
STA 225+39 RT (15')
STA 227+15 LT (15')
STA 41+01 LT (12')

REMOVAL OF EXISTING PAVEMENT MARKINGS
STA 226+03 - 226+26 CL (23 SF)
STA 226+63 - 226+86 CL (23 SF)
STA 40+24 - 40+46 CL (22 SF)

STA. 228+35 LT
REPLACE SIDE ROAD WARNING SIGN W2-2
WITH SIGNAL WARNING SIGN W3-3 ON
EXISTING POST WHEN SIGNAL IS IN PLACE.

REINSTALL SIDE ROAD WARNING SIGN
WHEN SIGNAL IS REMOVED.

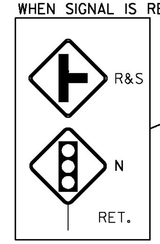

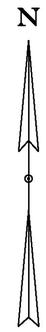

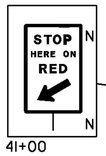

41+00
REMOVE UPON REMOVAL
OF SIGNAL

PHASING DIAGRAM

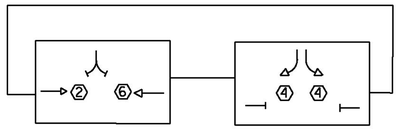

40+75
REMOVE UPON REMOVAL
OF SIGNAL

STA 40+35 RI-1
REMOVE WHEN SIGNAL BECOMES OPERATIONAL
REPLACE WHEN SIGNAL IS REMOVED

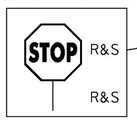

NOTE: ALL WORK DETAILED ON THIS SHEET, INCLUDING PAVEMENT MARKINGS, REMOVAL OF EXISTING PAVEMENT MARKINGS AND SIGNS WILL BE INCLUDED IN THE UNIT PRICE BID FOR CONTRACT ITEM 678.40.

LEGEND

- SIGNAL HEAD AND PHASE NUMBER
- POLE AND GUY WIRE
- CONTROLLER CABINET
- RADAR DETECTOR
- RADAR DETECTION AREA AND PHASE NUMBER

0 10 20
SCALE

PROJECT NAME: STOWE
PROJECT NUMBER: BRF 0235(11)

FILE NAME: t87e052sig.dgn
PROJECT LEADER: C. CARLSON
DESIGNED BY: I. DEGUTIS
TEMPORARY TRAFFIC SIGNAL PLAN

PLOT DATE: 28-JUL-2014
DRAWN BY: I. DEGUTIS
CHECKED BY: M. LACROIX
SHEET 21 OF 64

TEMPORARY TRAFFIC SIGNAL SYSTEM NOTES

TEMPORARY TRAFFIC CONTROL NOTES FOR TRAFFIC SIGNAL SYSTEM WORK

1. THE FOLLOWING NOTES APPLY TO TRAFFIC CONTROL NECESSARY FOR THE INSTALLATION OR MODIFICATION OF THE TEMPORARY TRAFFIC SIGNALS ONLY.
2. DURING CONSTRUCTION, ONE-WAY TRAFFIC SHALL BE MAINTAINED AT ALL TIMES ON VT ROUTE 100. TWO-WAY TRAFFIC SHALL BE MAINTAINED AT NIGHT, ON WEEKENDS AND HOLIDAYS. DURING PEAK TRAFFIC AND DURING CONSTRUCTION. AT THE DISCRETION OF THE ENGINEER, UNIFORMED TRAFFIC OFFICERS OR TRAINED FLAG PERSONS SHALL DIRECT TRAFFIC, WHENEVER REQUIRED.
3. TRAFFIC CONTROL SIGNING AND CHANNELIZING DEVICES SHALL BE IN ACCORDANCE WITH THE APPROPRIATE STANDARD DRAWINGS (T-1, T-28, T-29, T-30, T-31, T-17, T-21) AND THE MANUAL ON UNIFORM TRAFFIC CONTROL DEVICES (MUTCD).
4. AFTER SIGNAL INSTALLATION, ALL HEADS MUST BE COVERED (TURNING SHALL NOT BE ALLOWED) UNTIL TURNED ON. THE METHOD OF COVERING SHALL BE AS FOLLOWS:
   - ALL NEW TRAFFIC AND PEDESTRIAN SIGNAL HEADS WHICH HAVE BEEN INSTALLED BUT NOT PLACED IN EITHER FLASHING OR FULL OPERATION SHALL BE COVERED. EXISTING SIGNAL HEADS WHICH ARE PLACED OUT OF SERVICE IN ORDER TO PERFORM WORK ON THE SIGNAL SYSTEM SHALL ALSO BE COVERED, EXCEPT WHEN SUCH WORK CAN BE COMPLETED IN A RELATIVELY SHORT PERIOD OF TIME (SEVERAL HOURS) AND TRAFFIC CONTROL HAS BEEN PROVIDED FOR.
   - THE SIGNAL COVERS SHALL CONSIST OF A ONE-PIECE PLASTIC BAG HAVING A MINIMUM THICKNESS OF FOUR MIL. THE BAG SHALL BE OPAQUE. THE COVER SHALL SLIP OVER THE ENTIRE SIGNAL HEAD AND SHALL BE SECURELY TIED AT THE OPENING WITH A ROPE OF SUFFICIENT SIZE AND STRENGTH TO SECURE THE COVER. AN INTERMEDIATE ROPE OF THE SAME MATERIAL SHALL BE DRAWN AROUND THE CENTER OF THE COVER TO PREVENT EXCESS FLAPPING IN THE WIND.
   - A DRAIN HOLE SHALL BE MADE AT THE BOTTOM OF THE BAG TO ALLOW THE ESCAPE OF MOISTURE. NO TAPE OR ADHESIVE WILL BE ALLOWED TO BE ATTACHED TO ANY SURFACE OF THE SIGNAL HOUSING OR LENSES. ALL COVERS SHALL BE PLACED IN A NEAT WORKMANLIKE MANNER, ANY COVER WHICH IS TORN OR MISSING SHALL BE IMMEDIATELY REPLACED. PAYMENT FOR THE COVERS, THEIR REPLACEMENT, AND REMOVAL AND ALL INCIDENTALS FOR COMPLETION OF THE WORK SHALL BE CONSIDERED INCIDENTAL TO CONTRACT ITEM 678.40.
5. WHERE TWO-WAY TRAFFIC IS MAINTAINED DURING CONSTRUCTION, THE SIGN PACKAGE SHOWN ON STD. T-21 SHOULD BE USED. APPROACH CONSTRUCTION SIGNING SHALL REMAIN IN PLACE DURING THE ENTIRE CONSTRUCTION PERIOD. OTHER SIGNING SHALL BE REMOVED OR COVERED WHEN NOT APPLICABLE.
6. VARIATIONS IN THE SIGNING PACKAGES MAY BE DICTATED BY UNIQUE GEOMETRY AND/OR TRAFFIC CONDITIONS AND THE TRAFFIC CONTROL PLANS.
7. THE CONTRACTOR SHALL NOT WORK WITHIN THE HIGHWAY RIGHT-OF-WAY WITHOUT THE APPROPRIATE CONSTRUCTION SIGNING IN PLACE AS SHOWN ON STD. T-10.

TEMPORARY TRAFFIC SIGNAL NOTES

1. TEMPORARY TRAFFIC SIGNAL SYSTEM SHALL BE IN ACCORDANCE WITH ITEM 678.40, "TEMPORARY TRAFFIC SIGNAL SYSTEM."
2. DESIGN OF THE SIGNAL SUPPORTS AND ANY REQUIRED GUYING IS THE RESPONSIBILITY OF THE CONTRACTOR.
3. SIGNAL PHASING/TIMING ADJUSTMENTS REQUESTED BY THE ENGINEER SHALL BE ACCOMPLISHED WITHIN A 48 HOUR PERIOD.
4. SIGNAL FACES SHALL BE L.E.D. AND CONSIST OF 12" LENSES. (RED, YELLOW AND GREEN)
5. THE BOTTOM OF THE HOUSING OF A SIGNAL FACE SUSPENDED OVER A ROADWAY SHALL NOT BE LESS THAN 16.5 FEET NOR MORE THAN 19 FEET ABOVE THE PAVEMENT GRADE AT THE CENTER OF THE ROADWAY. THE BOTTOM OF A SIGNAL FACE NOT MOUNTED OVER A ROADWAY SHALL NOT BE LESS THAN 8 FEET NOR MORE THAN 15 FEET ABOVE THE GROUND.
6. SIGNAL FACES FOR ANY ONE APPROACH SHALL NOT BE LESS THAN 8 FEET APART MEASURED HORIZONTALLY BETWEEN CENTER FACES.
7. SIGNAL HEADS MAY BE HUNG ON A SPAN WIRE OR ON A CANTILEVER MAST ARM. AT LEAST ONE SIGNAL HEAD SHALL BE UNMISTAKABLY IN LINE WITH THE CENTER OF APPROACHING TRAFFIC AT ALL TIMES. THE SECOND SIGNAL HEAD MAY BE POST MOUNTED, LOCATED AT A DISTANCE OF NO GREATER THAN 14.5 FEET FROM THE CENTER OF THE APPROACH LANE WHEN THE STOP BAR IS 40 FEET FROM THE SIGNAL HEAD. CONSULT THE CURRENT EDITION OF THE MUTCD FOR ADDITIONAL INFORMATION CONCERNING SIGNAL PLACEMENT.
8. SIGNAL HEAD PLACEMENT IS CRITICAL.
9. THE TEMPORARY TRAFFIC SIGNAL SYSTEM SHALL CONSIST OF POLES, SIGNS AND POSTS, WARNING SIGNS, LUMINAIRES, FLASHING BEACONS, ASSOCIATED PAVEMENT MARKINGS, AND SIGNAL EQUIPMENT TO PROVIDE FOR AN ADEQUATE DESIGN. IT ALSO INCLUDES PERMITS AND COSTS ASSOCIATED WITH PROVIDING ELECTRICAL POWER.
10. INSTALL WIRING BETWEEN SIGNAL POLES TO PROVIDE FOR A SAFE INSTALLATION. ATTACHMENT TO UTILITY POLES TO BE COORDINATED BY THE CONTRACTOR WITH THE UTILITY COMPANY.
11. PLACE TEMPORARY POLES BEHIND GUARDRAIL OR OUTSIDE OF THE CLEAR ZONE.
12. POLES SUPPORTING SPAN WIRES AND/OR MAST ARMS SHALL BE ADEQUATELY BRACED OR GUYED AND SHALL NOT BE PLACED SO AS TO CREATE A HAZARD TO THE TRAVELING PUBLIC.
13. ALL TEMPORARY SIGNAL EQUIPMENT, SIGNS, ETC., SHALL BELONG TO THE CONTRACTOR AT THE END OF THE PROJECT AND THE CONTRACTOR SHALL BE RESPONSIBLE FOR THEIR REMOVAL INCLUDING ANY TEMPORARY PAVEMENT MARKINGS, UTILITY POLES, WIRES, ETC.

A. SIGNAL EQUIPMENT

1. ALL SIGNAL HEADS SHALL BE 12" POLYCARBONATE. THE SIGNAL HEADS SHALL HAVE FLAT BLACK HOUSINGS AND VISORS.
2. ALL SIGNAL HEADS SHALL HAVE FLAT BLACK LOUVERED BACK PLATES.
3. THE CONTROLLER SHALL BE AN ASC/3-2100 (NEMA TS2) OR NAZTEC MODEL 980 (NEMA TS2) OR MCCAIN ATC eX (NEMA TS2) IN A NEMA POLE MOUNT CONTROL CABINET INSTALLED AT THE LOCATION SHOWN ON THE PLANS. THE TRAFFIC CONTROL CABINET SHALL BE ORIENTED SUCH THAT THE DOOR DOES NOT FACE THE ROADWAY.
4. ALL SIGNAL HEADS SHALL HAVE RED, YELLOW AND GREEN L.E.D. SIGNALS WITH A VISIBLE BEAM SPREAD OF 80 DEGREES OFF AXIS.
5. ALL TRAFFIC SIGNAL EQUIPMENT AND SPAN WIRE HANGING SIGNS SHALL HAVE SAFETY CABLES.
6. A DISCONNECT BREAKER FOR EACH CIRCUIT SHALL BE INSTALLED IN A RAINPROOF (NEMA 3R), LOCKED CABINET ON A STANCHION NEXT TO OR BELOW THE METER SOCKET.

B. SIGNAL OPERATION

1. SWITCH-OVER TO THE TEMPORARY TRAFFIC SIGNAL SYSTEM SHALL NOT OCCUR DURING PEAK TRAFFIC OPERATING PERIODS. UNIFORMED TRAFFIC OFFICERS SHALL CONTROL TRAFFIC DURING THE SWITCH-OVER.
2. ALL SIGNALS SHALL DWELL ON VT ROUTE 100 UNLESS OTHERWISE NOTED.
3. THE VT ROUTE 100 THRU PHASE SHALL BE USED FOR THE START-UP PHASE FOLLOWING FLASHING OPERATION.
4. SIGNAL TIMING SHOWN ON THE PLANS MAY REQUIRE FINE-TUNING IN THE FIELD BASED ON TRAFFIC OBSERVATION AND/OR ADDITIONAL FIELD STUDIES.

C. STOP BAR DETECTION EQUIPMENT

1. STOP BAR DETECTORS SHALL BE PLACED SO THAT OCCLUSION IS MINIMIZED AND PHASE IS NOT AFFECTED.
2. STOP BAR DETECTION ZONES SHALL EXTEND FIVE FEET PAST THE STOP BAR.
3. SEE THE PLANS FOR A DETAILED LIST OF EQUIPMENT. INDUCTIVE LOOPS OR VIDEO DETECTION SHALL NOT BE ALLOWED.

D. GENERAL

1. A UNIFORMED TRAFFIC OFFICER WITH A BLUE LIGHT SHALL BE PRESENT DURING ALL LANE CLOSURES.
2. THE CONTRACTOR SHALL ACQUIRE ALL NECESSARY PERMITS AND MAKE ALL NECESSARY ARRANGEMENTS WITH THE UTILITY COMPANY TO PROVIDE A POWER SUPPLY TO THE TRAFFIC SIGNAL EQUIPMENT.
3. ALL ELECTRICAL WIRING SHALL BE DONE BY A LICENSED ELECTRICIAN AND OVERSEEN BY A MASTER ELECTRICIAN.
4. SEE STANDARDS E171-A AND 171-B FOR ADDITIONAL NOTES.
5. SAG ON THE LOADED SPAN WIRE SHALL NOT EXCEED 5% OF THE TOTAL LENGTH OF THE WIRE.
6. ALL WORKS MENTIONED IN THIS SHEET BE INCLUDED UNDER BID ITEM 678.40 UNLESS OTHERWISE NOTED.

PROJECT NAME:	STOWE
PROJECT NUMBER:	BRF 0235(11)
FILE NAME: t87e052sig.dgn	PLOT DATE: 28-JUL-2014
PROJECT LEADER: C. CARLSON	DRAWN BY: I. DEGUTIS
DESIGNED BY: I. DEGUTIS	CHECKED BY: M. LACROIX
TEMPORARY TRAFFIC SIGNAL SYSTEM NOTES	SHEET 22 OF 64

SOIL CLASSIFICATION

AASHTO	
A1	Gravel and Sand
A3	Fine Sand
A2	Silty or Clayey Gravel and Sand
A4	Silty Soil - Low Compressibility
A5	Silty Soil - Highly Compressible
A6	Clayey Soil - Low Compressibility
A7	Clayey Soil - Highly Compressible

ROCK QUALITY DESIGNATION

R.Q.D. (%)	ROCK DESCRIPTION
<25	Very Poor
25 to 50	Poor
51 to 75	Fair
76 to 90	Good
>90	Excellent

SHEAR STRENGTH

UNDRAINED SHEAR STRENGTH IN P.S.F.	CONSISTENCY
<250	Very Soft
250-500	Soft
500-1000	Med. Stiff
1000-2000	Stiff
2000-4000	Very Stiff
>4000	Hard

CORRELATION GUIDE OF "N" TO DENSITY/CONSISTENCY

DENSITY (GRANULAR SOILS)		CONSISTENCY (COHESIVE SOILS)	
N	DESCRIPTIVE TERM	N	DESCRIPTIVE TERM
<5	Very Loose	<2	Very Soft
5-10	Loose	2-4	Soft
11-24	Med. Dense	5-8	Med. Stiff
25-50	Dense	9-15	Stiff
>50	Very Dense	16-30	Very Stiff
		31-60	Hard
		>60	Very Hard

COMMONLY USED SYMBOLS

▼	Water Elevation
⊙	Standard Penetration Boring
⊕	Auger Boring
⊙	Rod Sounding
S	Sample
N	Standard Penetration Test Blow Count Per Foot For: 2" O.D. Sampler 1 3/8" I.D. Sampler Hammer Weight Of 140 Lbs. Hammer Fall Of 30"
VS	Field Vane Shear Test
US	Undisturbed Soil Sample
B	Blast
DC	Diamond Core
MD	Mud Drill
WA	Wash Ahead
HSA	Hollow Stem Auger
AX	Core Size 1 1/8"
BX	Core Size 1 5/8"
NX	Core Size 2 1/8"
M	Double Tube Core Barrel Used
LL	Liquid Limit
PL	Plastic Limit
PI	Plasticity Index
NP	Non Plastic
w	Moisture Content (Dry Wgt. Basis)
D	Dry
M	Moist
MTW	Moist To Wet
W	Wet
Sat	Saturated
Bo	Boulder
Gr	Gravel
Sa	Sand
Si	Silt
Cl	Clay
HP	Hardpan
Le	Ledge
NLTD	No Ledge To Depth
CNPF	Can Not Penetrate Further
TLOB	Top of Ledge Or Boulder
NR	No Recovery
Rec.	Recovery
%Rec.	Percent Recovery
RQD	Rock Quality Designation
CBR	California Bearing Ratio
<	Less Than
>	Greater Than
R	Refusal (N > 100)
VTSPG	NAD83 - See Note 7

COLOR

blk	Black	pnk	Pink
bl	Blue	pu	Purple
brn	Brown	rd	Red
dk	Dark	tn	Tan
gry	Gray	wh	White
gn	Green	yel	Yellow
lt	Light	mltc	Multicolored
or	Orange		

DEFINITIONS (AASHTO)

BEDROCK (LEDGE) - Rock in its native location of indefinite thickness.

BOULDER - A rock fragment with an average dimension > 12 inches.

COBBLE - Rock fragments with an average dimension between 3 and 12 inches.

GRAVEL - Rounded particles of rock < 3" and > 0.0787" (#10 sieve).

SAND - Particles of rock < 0.0787" (#10 sieve) and > 0.0029" (#200 sieve).

SILT - Soil < 0.0029" (#200 sieve), non or slightly plastic and exhibits no strength when air-dried.

CLAY - Fine grained soil, exhibits plasticity when moist and considerable strength when air-dried.

VARVED - Alternate layers of silt and clay.

HARDPAN - Extremely dense soil, cemented layer, not softened when wet.

MUCK - Soft organic soil (containing > 10% organic material.

MOISTURE CONTENT - Weight of water divided by dry weight of soil.

FLOWING SAND - Granular soil so saturated (loose) that it flows into drill casing during extraction of wash rod.

STRIKE - Angle from magnetic north to line of intersection of bed with a horizontal plane.

DIP - Inclination of bed with a horizontal plane.

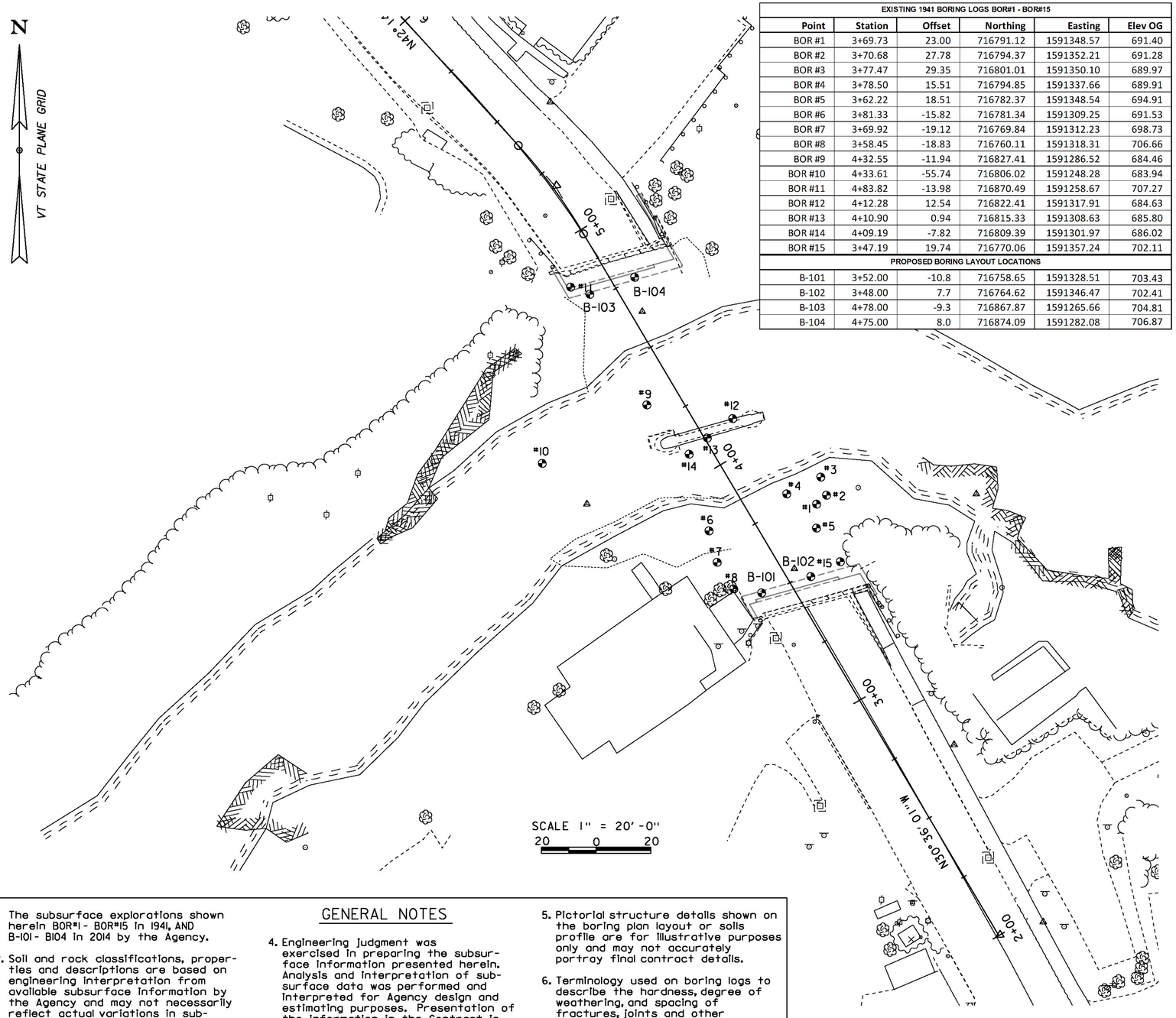

EXISTING 1941 BORING LOGS BOR#1 - BOR#15					
Point	Station	Offset	Northing	Easting	Elev OG
BOR #1	3+69.73	23.00	716791.12	1591348.57	691.40
BOR #2	3+70.68	27.78	716794.37	1591352.21	691.28
BOR #3	3+77.47	29.35	716801.01	1591350.10	689.97
BOR #4	3+78.50	15.51	716794.85	1591337.66	689.91
BOR #5	3+62.22	18.51	716782.37	1591348.54	694.91
BOR #6	3+81.33	-15.82	716781.34	1591309.25	691.53
BOR #7	3+69.92	-19.12	716769.84	1591312.23	698.73
BOR #8	3+58.45	-18.83	716760.11	1591318.31	706.66
BOR #9	4+32.55	-11.94	716827.41	1591286.52	684.46
BOR #10	4+33.61	-55.74	716806.02	1591248.28	683.94
BOR #11	4+83.82	-13.98	716870.49	1591258.67	707.27
BOR #12	4+12.28	12.54	716822.41	1591317.91	684.63
BOR #13	4+10.90	0.94	716815.33	1591308.63	685.80
BOR #14	4+09.19	-7.82	716809.39	1591301.97	686.02
BOR #15	3+47.19	19.74	716770.06	1591357.24	702.11
PROPOSED BORING LAYOUT LOCATIONS					
B-101	3+52.00	-10.8	716758.65	1591328.51	703.43
B-102	3+48.00	7.7	716764.62	1591346.47	702.41
B-103	4+78.00	-9.3	716867.87	1591265.66	704.81
B-104	4+75.00	8.0	716874.09	1591282.08	706.87

GENERAL NOTES

1. The subsurface explorations shown herein BOR#1- BOR#15 in 1941, AND B-101- B104 in 2014 by the Agency.
2. Soil and rock classifications, properties and descriptions are based on engineering interpretation from available subsurface information by the Agency and may not necessarily reflect actual variations in subsurface conditions that may be encountered between individual boring or sample locations.
3. Observed water levels and/or conditions indicated are as recorded at the time of exploration and may vary according to the prevailing rainfall, methods of exploration and other factors.
4. Engineering Judgment was exercised in preparing the subsurface information presented herein. Analysis and interpretation of subsurface data was performed and interpreted for Agency design and estimating purposes. Presentation of the information in the Contract is intended to provide the Contractor access to the same data available to the Agency. The subsurface information is presented in good faith and is not intended as a substitute for personal investigation, independent interpretation, independent analysis or judgment by the Contractor.
5. Pictorial structure details shown on the boring plan layout or soils profile are for illustrative purposes only and may not accurately portray final contract details.
6. Terminology used on boring logs to describe the hardness, degree of weathering, and spacing of fractures, joints and other discontinuities in the bedrock is defined in the AASHTO Manual on Subsurface Investigations, 1988.
7. Northing and Easting coordinates are shown in Vermont State Plane Grid North American Datum 1983 in meters and survey feet.

PROJECT NAME: STOWE
PROJECT NUMBER: BRF 0235 (11)

FILE NAME: s87e052bor.dgn
PROJECT LEADER: C. CARLSON
DESIGNED BY: D. PETERSON
BORING INFORMATION SHEET

PLOT DATE: 28-JUL-2014
DRAWN BY: D. KARABEGOVIC
CHECKED BY: M. LONGSTREET
SHEET 23 OF 64

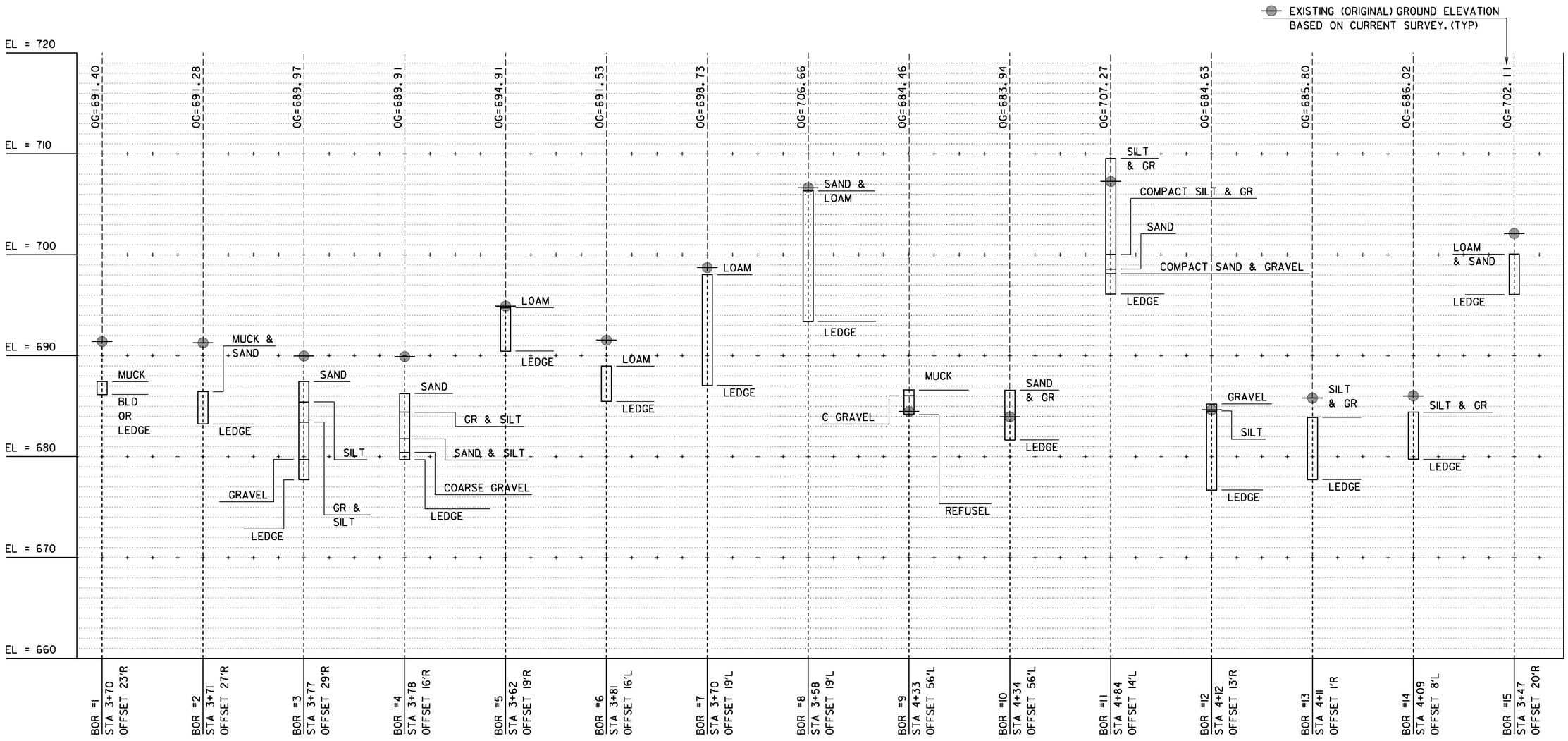

NOTES:

1) THESE BORINGS (BOR #1 - BOR #15) WERE EXTRACTED FROM 1941 RECORD PLANS "STOWE VILLAGE BRIDGE S.A. 4-1941". THE ELEVATION DATUM USED ON THESE RECORD PLANS APPEARS TO BE RELATIVELY SIMILAR, APPROXIMATELY 0.61' LOWER THAN THE PROPOSED PROJECT VERTICAL DATUM BASED ON F.G. ELEVATIONS AT BEGIN BRIDGE AND END BRIDGE. ELEVATIONS OF THE CHANNEL GROUND WILL LIKELY VARY MORE SIGNIFICANTLY.

2) THE SYMBOL (—●—) INDICATES THE ELEVATION OF THE CURRENT CHANNEL PER THE PROPOSED PROJECT EXISTING GROUND SURVEY. CURRENT EXISTING GROUND ELEVATIONS ARE ALSO LABLED FOR EACH BORING LOCATION.

3) THE BORING LOCATIONS WERE SCALED AND PLOTTED USING THE 1941 RECORD PLANS.

4) THE APPROXIMATE LOCATIONS OF EACH SUBSURFACE MATERIAL WERE SCALED AND PLOTTED FROM THE 1941 RECORD PLAN BORING TABLE.

5) BORING LOGS B-101 - B-104 PROVIDE CURRENT INFORMATION.

PROJECT NAME: STOWE
PROJECT NUMBER: BRF 0235 (11)

FILE NAME: s87e052bor.dgn
PROJECT LEADER: C. CARLSON
DESIGNED BY: D. PETERSON
BORING LOGS 1

PLOT DATE: 28-JUL-2014
DRAWN BY: M. LONGSTREET
CHECKED BY: J. LACROIX
SHEET 24 OF 64

STATE OF VERMONT
AGENCY OF TRANSPORTATION
MATERIALS & RESEARCH SECTION
SUBSURFACE INFORMATION

BORING LOG

STOWE
BHF 0235(11)
VT-108 BR-2

Boring No.: **B-101**
Page No.: 1 of 1
Pin No.: 87E052
Checked By:

Boring Crew: JUDKINS, GARROW, NIETO
Date Started: 1/14/14 Date Finished: 1/15/14
VTSPG NAD83: N 716758.65 ft E 1591328.51 ft
Station: 3+52 Offset: -10.80
Ground Elevation: 703.43 ft

	Casing	Sampler
Type:	WB	SS
I.D.:	4 in	1.5 in
Hammer Wt:	N.A.	140 lb.
Hammer Fall:	N.A.	30 in.
Hammer/Rod Type:	Auto/AWJ	
Rig:	CME 55 TRACK	C_e = 1.46

Groundwater Observations

Date	Depth (ft)	Notes

PILE CAP
EL=699.00

ESTIMATED PILE
TIP EL= 689.00

Depth (ft)	Strata (1)	CLASSIFICATION OF MATERIALS (Description)	Run (Dlp deg.)	Core Rec. % (RQD %)	Drill Rate minutes/ft	Blows/6" (N Value)	Moisture Content %	Gravel %	Sand %	Fines %
		Field Note:, No Recovery				R@1.0"				
2.5										
		Field Note:, NXDC, Cleaned out casing.								
5.0		A-1-b, SiSaGr, gry-brn, Moist, Rec. = 0.9 ft, Lab Note: Broken Rock was within sample.				4-3-4-6 (7)	22.5	52.6	24.9	22.5
7.5										
		9.0 ft - 11.0 ft, First two feet of run is possible Boulder.. NXMDC	1 (70)	100 (0)	3 2 8					
10.0		11.0 ft - 12.0 ft, Dark gray & black, Carbonaceous biotite-muscovite-quartz Phyllite, with quartz laminae. Moderately soft, Unweathered, Fair rock, RMR = 44				Top of Bedrock @ 11.0 ft				
12.5		12.0 ft - 17.0 ft, Dark gray & black, Carbonaceous biotite-muscovite-quartz Phyllite, with quartz laminae. Moderately soft, Unweathered, Fair rock, NXMDC, RMR = 49	2 (70)	96 (30)	4 3 3 3 6					
15.0										
17.5		17.0 ft - 19.0 ft, Dark gray, Carbonaceous biotite-muscovite-quartz Phyllite, with quartz laminae. Moderately soft, Unweathered, Fair rock, NXMDC, RMR = 54	3 (70)	90 (70)	3 5					
20.0		Hole stopped @ 19.0 ft								
22.5		Remarks: 1. Drilling was performed from the bridge deck. 2. Asphalt Pavement depth was 0.20 ft. 3. Concrete depth was 0.90 ft.								

Notes:
1. Stratification lines represent approximate boundary between material types. Transition may be gradual.
2. N Values have not been corrected for hammer energy. C_e is the hammer energy correction factor.
3. Water level readings have been made at times and under conditions stated. Fluctuations may occur due to other factors than those present at the time measurements were made.

BORING LOG 2 STOWE BHF 0235(11).GPJ VERMONT AOT.GDT 1/31/14

STATE OF VERMONT
AGENCY OF TRANSPORTATION
MATERIALS & RESEARCH SECTION
SUBSURFACE INFORMATION

BORING LOG

STOWE
BHF 0235(11)
VT-108 BR-2

Boring No.: **B-102**
Page No.: 1 of 1
Pin No.: 87E052
Checked By:

Boring Crew: JUDKINS, GARROW, NIETO
Date Started: 1/17/14 Date Finished: 1/17/14
VTSPG NAD83: N 716764.62 ft E 1591346.47 ft
Station: 3+48 Offset: 7.70
Ground Elevation: 702.41 ft

	Casing	Sampler
Type:	WB	SS
I.D.:	4 in	1.5 in
Hammer Wt:	N.A.	140 lb.
Hammer Fall:	N.A.	30 in.
Hammer/Rod Type:	Auto/AWJ	
Rig:	CME 55 TRACK	C_e = 1.46

Groundwater Observations

Date	Depth (ft)	Notes
01/17/14	2.0	While drilling.

PILE CAP
EL=699.00

ESTIMATED PILE
TIP EL= 689.00

Depth (ft)	Strata (1)	CLASSIFICATION OF MATERIALS (Description)	Run (Dlp deg.)	Core Rec. % (RQD %)	Drill Rate minutes/ft	Blows/6" (N Value)	Moisture Content %	Gravel %	Sand %	Fines %
		A-1-b, SaGr, brn-gry, Moist, Rec. = 1.2 ft, Lab Note: Broken Rock was within sample.				25-11-4-3 (15)	6.9	45.3	36.4	18.3
2.5		A-2-4, SiGrSa, white-brn, Moist, Rec. = 0.5 ft, Lab Note: Broken Rock was within sample.				4-3-10-8 (13)	12.8	28.3	49.4	22.3
5.0		A-2-4, GrSiSa, brn-gry, Moist, Rec. = 1.1 ft, Lab Note: Broken Rock was within sample.				4-2-2-2 (4)	28.3	24.2	42.7	33.1
7.5		A-1-b, SaGr, brn-gry, Moist, Rec. = 0.4 ft, Lab Note: Broken Rock was within sample.				4-10-R@0.0" (R)	15.7	52.8	29.0	18.2
		8.0 ft - 13.0 ft, Grayish green, Chlorite-muscovite-quartz Phyllitic Schist, with quartzofeldspthic layers. Moderately soft, Unweathered, Fair rock, NXMDC, RMR = 58	1 (60)	100 (84)	6 3 3 4 4	Top of Bedrock @ 8.0 ft				
10.0										
12.5		13.0 ft - 18.0 ft, Grayish green, Chlorite-muscovite-quartz Phyllitic Schist, with quartzofeldspthic layers. Moderately soft, Unweathered, Fair rock, NXMDC, RMR = 58	2 (60)	100 (80)	3 3 3 3 3					
15.0										
17.5		Hole stopped @ 18.0 ft								
20.0		Remarks: 1. Drilling was performed from the bridge deck. 2. Asphalt Pavement depth was 0.15 ft. 3. Concrete depth was 0.67 ft. 4. Hole collapsed at 7.0 ft.								
22.5										

Notes:
1. Stratification lines represent approximate boundary between material types. Transition may be gradual.
2. N Values have not been corrected for hammer energy. C_e is the hammer energy correction factor.
3. Water level readings have been made at times and under conditions stated. Fluctuations may occur due to other factors than those present at the time measurements were made.

BORING LOG 2 STOWE BHF 0235(11).GPJ VERMONT AOT.GDT 1/31/14

PROJECT NAME: STOWE
PROJECT NUMBER: BRF 0235 (11)

FILE NAME: s87e052bor.dgn
PROJECT LEADER: C. CARLSON
DESIGNED BY: D. PETERSON
BORING LOGS 2

PLOT DATE: 28-JUL-2014
DRAWN BY: M. LONGSTREET
CHECKED BY: J. LACROIX
SHEET 25 OF 64

STATE OF VERMONT
AGENCY OF TRANSPORTATION
MATERIALS & RESEARCH SECTION
SUBSURFACE INFORMATION

BORING LOG

STOWE
BHF 0235(11)
VT-108 BR-2

Boring No.: **B-103**
Page No.: 1 of 1
Pin No.: 87E052
Checked By:

Boring Crew: JUDKINS, GARROW, NIETO
Date Started: 1/13/14 Date Finished: 1/14/14
VTSPG NAD83: N 716867.87 ft E 1591265.66 ft
Station: 4+78 Offset: -9.30
Ground Elevation: 704.81 ft

	Casing	Sampler
Type:	WB	SS
I.D.:	4 in	1.5 in
Hammer Wt:	N.A.	140 lb.
Hammer Fall:	N.A.	30 in.
Hammer/Rod Type:	Auto/AWJ	
Rig:	CME 55 TRACK	C_e = 1.46

Groundwater Observations

Date	Depth (ft)	Notes
01/14/14	2.7	While drilling.
01/14/14	1.1	Hole collapsed.

PILE CAP
EL=702.00

ESTIMATED PILE
TIP EL= 685.71

Depth (ft)	Strata (1)	CLASSIFICATION OF MATERIALS (Description)	Run (Dip deg.)	Core Rec. % (RQD %)	Drill Rate minutes/ft	Blows/6" (N Value)	Moisture Content %	Gravel %	Sand %	Fines %
		A-1-b, SaGr, gry, Moist, Rec. = 1.3 ft, Lab Note: Mostly Broken Rock pieces (Phyllite).				30-17-5-2 (22)	14.1	52.1	29.6	18.3
		A-1-a, SaGr, brn-gry, Moist, Rec. = 0.7 ft, Lab Note: Mostly Broken Rock pieces (Phyllite).				3-10-8-7 (18)	10.1	56.5	31.9	11.6
5		A-4, SaSi, gry-Lt/brn, Moist, Rec. = 1.3 ft				3-4-5-6 (9)	18.4	6.3	39.0	54.7
		A-4, GrSaSi, gry-Lt/brn, Moist, Rec. = 1.2 ft, Lab Note: Broken Rock pieces (Phyllite) were within sample.				5-6-8-R@1.0" (14)	16.7	22.1	35.2	42.7
		A-1-b, SiSaGr, gry-rust, Moist, Rec. = 0.3 ft, Lab Note: Broken & Weathered Rock pieces (Phyllite) were within sample.				R@3.5"	14.4	39.2	36.9	23.9
10		A-4, SaSi, gry, Moist, Rec. = 1.2 ft, Lab Note: Broken Rock pieces (Phyllite) were within sample.				9-7-7-7 (14)	22.3	10.4	42.0	47.6
		A-4, GrSaSi, gry, Moist, Rec. = 1.5 ft, Lab Note: Broken Rock pieces (Phyllite) were within sample.				4-5-8-14 (13)	16.4	30.5	33.5	36.0
		A-1-b, SaGr, gry, Moist, Rec. = 1.4 ft, Lab Note: Broken Rock pieces (Phyllite) were within sample.				32-36-R@5.0" (R) R@1.0"	11.9	50.9	31.9	17.2
15		Visual Description:, Broken Rock pieces (Phyllite), gry, Moist, Rec. = 0.1 ft	1 (60)	80 (0)	5					
		16.1 ft - 21.1 ft, Dark gray, Carbonaceous biotite-muscovite-quartz Phyllite, with quartz laminae. Moderately soft, Fair rock, NXMDC, Upper part of Run was Unweathered. Lower part of Run was Moderately Weathered. RMR = 44			4 8 9 11					
20		Top of Bedrock @ 16.1 ft								
		21.1 ft - 26.1 ft, Dark gray, Carbonaceous biotite-muscovite-quartz Phyllite, with quartz laminae. Moderately soft, Unweathered, Fair rock, NXMDC, RMR = 54	2 (60)	100 (60)	4 5 6 5 6					
25		Hole stopped @ 26.1 ft								
30		Remarks: 1. Drilling was performed from the bridge deck. 2. Asphalt Pavement depth was 0.13 ft. 3. Concrete depth was 0.97 ft.								

Notes:
1. Stratification lines represent approximate boundary between material types. Transition may be gradual.
2. N Values have not been corrected for hammer energy. C_e is the hammer energy correction factor.
3. Water level readings have been made at times and under conditions stated. Fluctuations may occur due to other factors than those present at the time measurements were made.

BORING LOG 2 STOWE BHF 0235(11).GPJ VERMONT AOT.GDT 1/31/14

STATE OF VERMONT
AGENCY OF TRANSPORTATION
MATERIALS & RESEARCH SECTION
SUBSURFACE INFORMATION

BORING LOG

STOWE
BHF 0235(11)
VT-108 BR-2

Boring No.: **B-104**
Page No.: 1 of 1
Pin No.: 87E052
Checked By:

Boring Crew: JUDKINS, GARROW, NIETO
Date Started: 1/16/14 Date Finished: 1/16/14
VTSPG NAD83: N 716874.09 ft E 1591282.08 ft
Station: 4+75 Offset: 8.00
Ground Elevation: 706.87 ft

	Casing	Sampler
Type:	WB	SS
I.D.:	4 in	1.5 in
Hammer Wt:	N.A.	140 lb.
Hammer Fall:	N.A.	30 in.
Hammer/Rod Type:	Auto/AWJ	
Rig:	CME 55 TRACK	C_e = 1.46

Groundwater Observations

Date	Depth (ft)	Notes
01/16/14	17.5	While drilling.

PILE CAP
EL=702.00

ESTIMATED PILE
TIP EL= 682.87

Depth (ft)	Strata (1)	CLASSIFICATION OF MATERIALS (Description)	Run (Dip deg.)	Core Rec. % (RQD %)	Drill Rate minutes/ft	Blows/6" (N Value)	Moisture Content %	Gravel %	Sand %	Fines %
		Field Note:, NXDC, Cleaned out casing								
		A-4, SaGrSi, Lt/brn, Moist, Rec. = 1.0 ft, Lab Note: Broken Rock was within sample.				6-2-2-5 (4)	23.9	31.4	26.6	42.0
5		A-4, SaSi, Lt/brn, Moist, Rec. = 1.3 ft, Lab Note: Sample was rust colored.				1-1-2-2 (3)	34.1	7.3	39.6	53.1
10		A-1-b, SaGr, gry, Moist, Rec. = 0.7 ft, Lab Note: Sample was mostly Broken Rock pieces (Phyllite).				15-R@3.5" (R)	11.8	44.7	39.4	15.9
		Field Note:, NXDC, Cobbles & Boulders, Cleaned out casing.								
15		A-1-b, SiSaGr, gry, Moist, Rec. = 1.4 ft, Lab Note: Broken Rock was within sample.				7-13-11-19 (24)	13.7	45.0	34.7	20.3
		Field Note:, NXDC, Cobbles, Cleaned out casing.								
20		21.0 ft - 26.0 ft, Grayish green, Chlorite-muscovite-quartz Phyllitic Schist, with quartzofeldspthic layers. Moderately soft, Unweathered, Fair rock, NXMDC, RMR = 49	1 (88)	96 (44)	4 6 5 5 4	Top of Bedrock @ 21.0 ft				
25		26.0 ft - 31.0 ft, Grayish green, Chlorite-muscovite-quartz Phyllitic Schist, with quartzofeldspthic layers. Moderately soft, Unweathered, Fair rock, NXMDC, RMR = 49	2 (88)	100 (36)	4 3 3 3 4					
30		Hole stopped @ 31.0 ft								
35		Remarks: 1. Drilling was performed from the bridge deck. 2. Asphalt Pavement depth was 0.15 ft. 3. Concrete depth was 0.85 ft.								

Notes:
1. Stratification lines represent approximate boundary between material types. Transition may be gradual.
2. N Values have not been corrected for hammer energy. C_e is the hammer energy correction factor.
3. Water level readings have been made at times and under conditions stated. Fluctuations may occur due to other factors than those present at the time measurements were made.

BORING LOG 2 STOWE BHF 0235(11).GPJ VERMONT AOT.GDT 1/31/14

PROJECT NAME: STOWE
PROJECT NUMBER: BRF 0235 (11)

FILE NAME: s87e052bor.dgn
PROJECT LEADER: C. CARLSON
DESIGNED BY: D. PETERSON
BORING LOGS 3

PLOT DATE: 28-JUL-2014
DRAWN BY: M. LONGSTREET
CHECKED BY: J. LACROIX
SHEET 26 OF 64

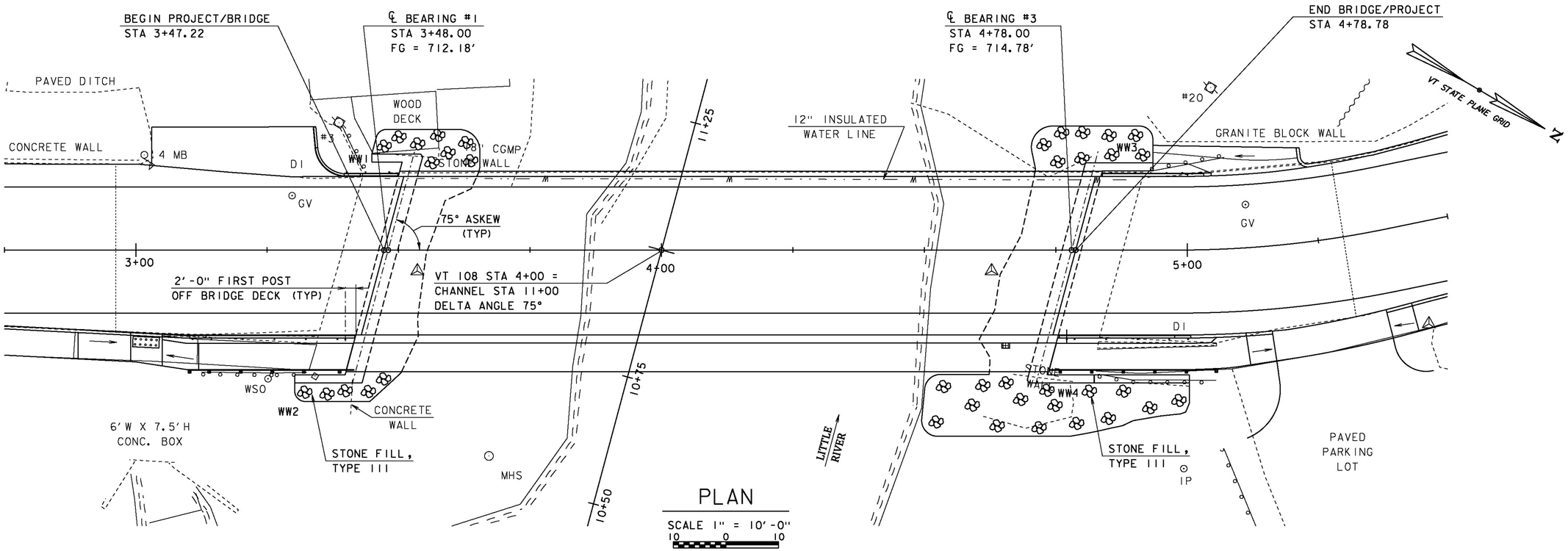

PROJECT NAME:	STOWE
PROJECT NUMBER:	BRF 0235 (11)
FILE NAME: s87e052pe.dgn	PLOT DATE: 28-JUL-2014
PROJECT LEADER: C. CARLSON	DRAWN BY: M. LONGSTREET
DESIGNED BY: D. PETERSON	CHECKED BY: J. LACROIX
PLAN & ELEVATION	SHEET 27 OF 64

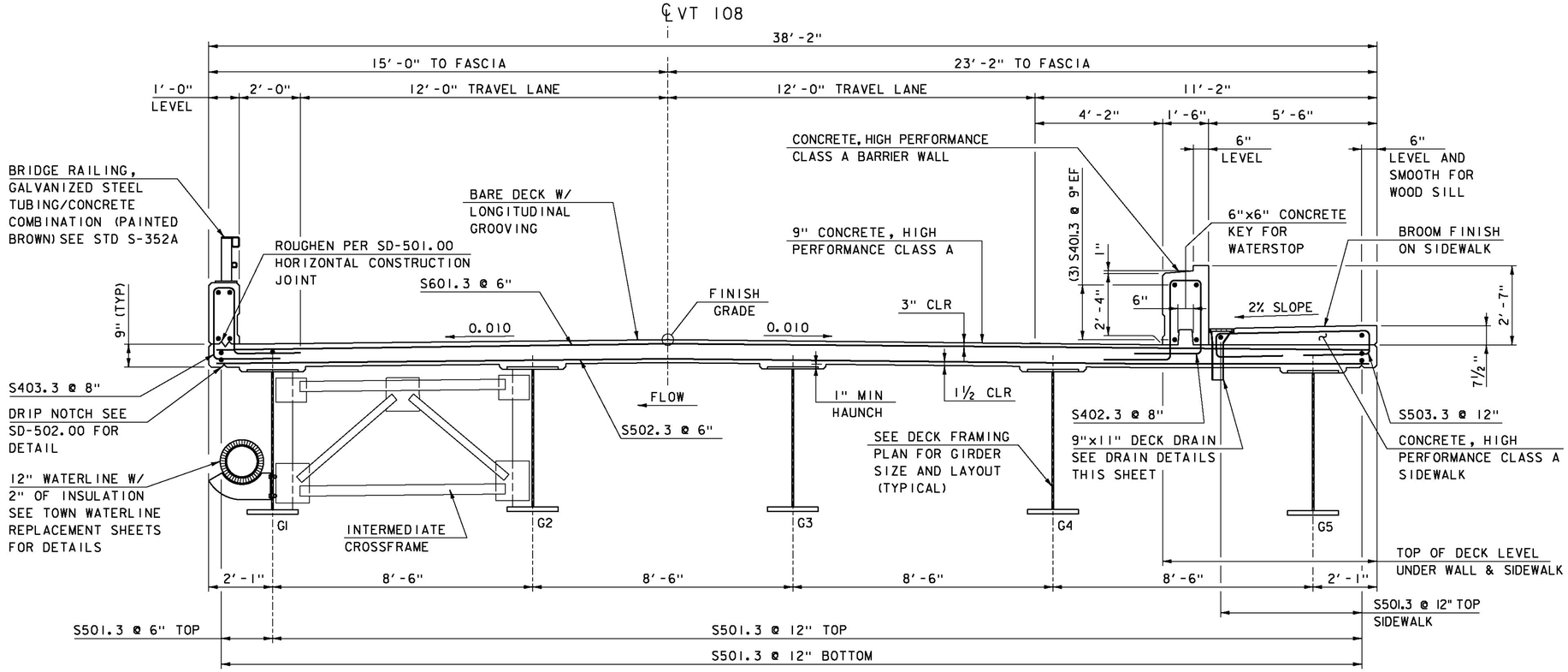

BRIDGE DECK TYPICAL

SCALE ½" = 1'-0"

NOTES:
1.) DECK DRAIN AND DOWNSPOUT PAYMENT METHOD SHALL BE INCIDENTAL TO CONCRETE, HIGH PERFORMANCE CLASS A

2.) PROVIDE DECK DRAIN, HEAVY DUTY, NEENAH STYLE, R-4015-BI OR EQUIVALENT, WITH TYPE "P" GRATE OR EQUIVALENT.

3.) GRATE AND DECK DRAIN SHALL BE HOT-DIP GALVANIZED.

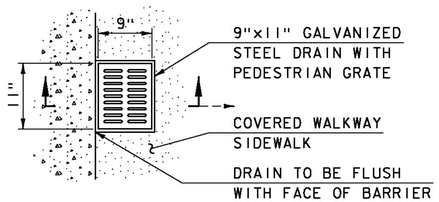

PLAN VIEW

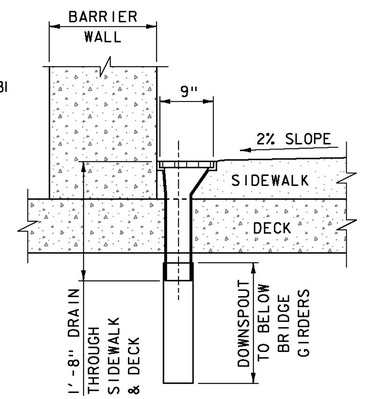

SECTION VIEW

DRAIN DETAILS

SCALE 1" = 1'-0"

NOTE:
NF = NEAR FACE
FF = FAR FACE
EF = EACH FACE
▲ = CUT TO FIT IN FIELD
3" CLEAR, UNLESS OTHERWISE SPECIFIED ON THE PLANS.
2'-2" BAR LAP UNLESS OTHERWISE SPECIFIED ON THE PLANS.

PROJECT NAME: STOWE
PROJECT NUMBER: BRF 0235 (11)

FILE NAME: s87e052sup.dgn
PROJECT LEADER: C. CARLSON
DESIGNED BY: D. PETERSON
DECK TYPICAL & DETAILS

PLOT DATE: 28-JUL-2014
DRAWN BY: M. LONGSTREET
CHECKED BY: J. LACROIX
SHEET 28 OF 64

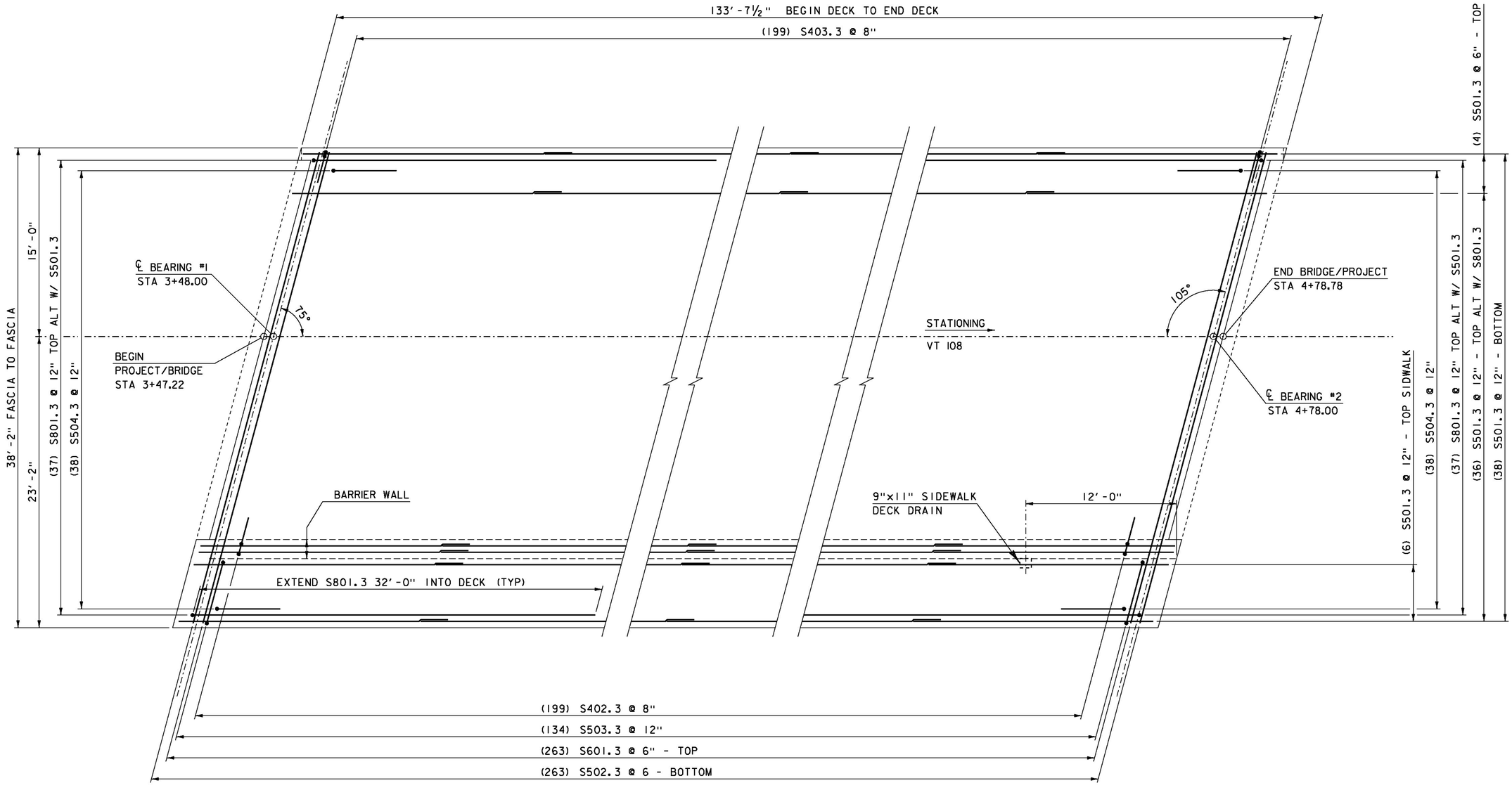

NOTE:

NF = NEAR FACE
FF = FAR FACE
EF = EACH FACE
▲ = CUT TO FIT IN FIELD
3" CLEAR, UNLESS OTHERWISE SPECIFIED ON THE PLANS.
2'-2" BAR LAP UNLESS OTHERWISE SPECIFIED ON THE PLANS.

DECK REINFORCING PLAN

SCALE: ¼" = 1'-0"

PROJECT NAME: STOWE
PROJECT NUMBER: BRF 0235 (11)

FILE NAME: s87e052sup.dgn
PROJECT LEADER: C. CARLSON
DESIGNED BY: D. PETERSON
DECK REINFORCING PLAN

PLOT DATE: 28-JUL-2014
DRAWN BY: D. KARABEGOVIC
CHECKED BY: M. LONGSTREET
SHEET 29 OF 64

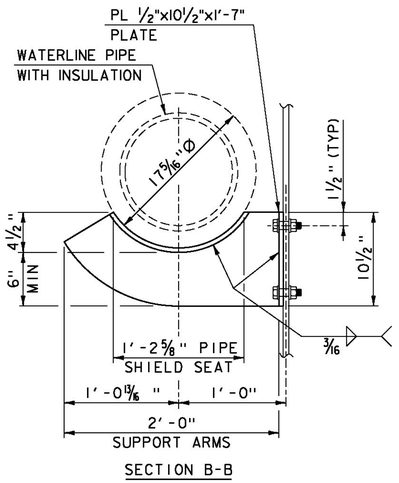

SECTION B-B

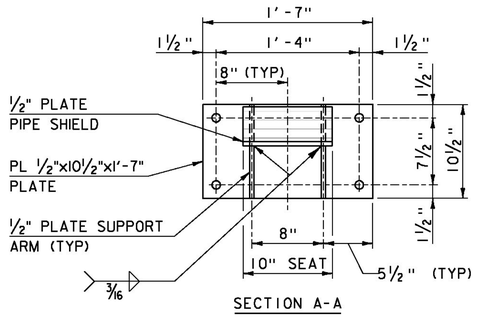

SECTION A-A

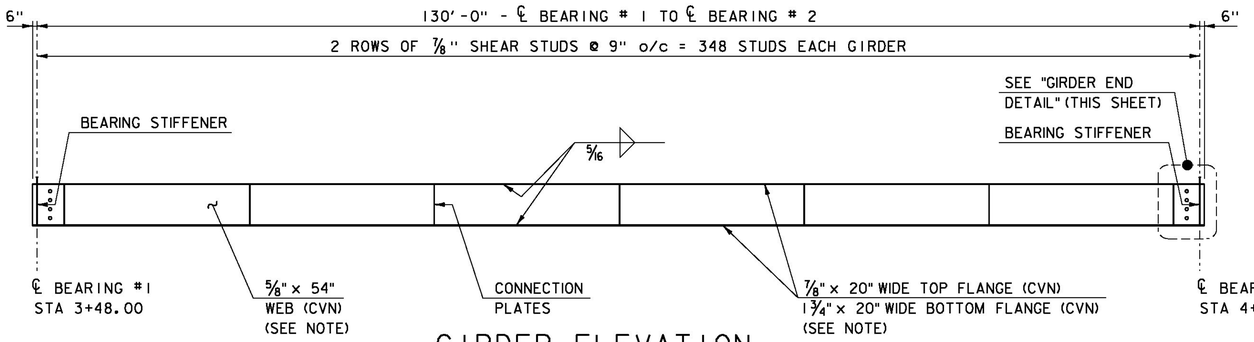

GIRDER ELEVATION

SCALE: ⅛" = 1'-0"

DECK FRAMING PLAN

SCALE: ⅛" = 1'-0"

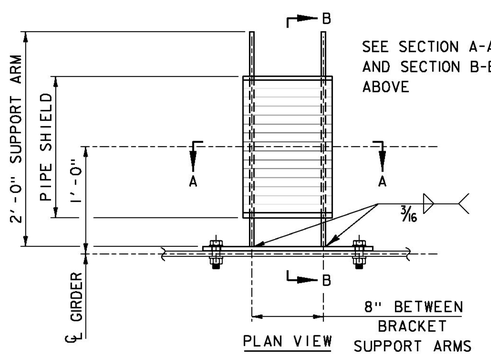

BRACKET DETAILS

SCALE: 1½" = 1'-0"

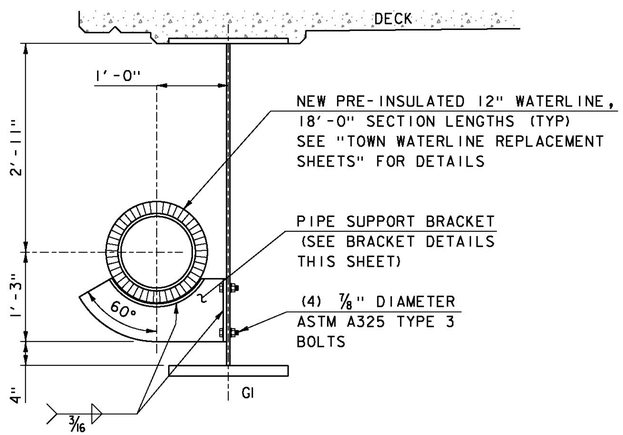

SUPPORT SECTION

SCALE 1" = 1'-0"

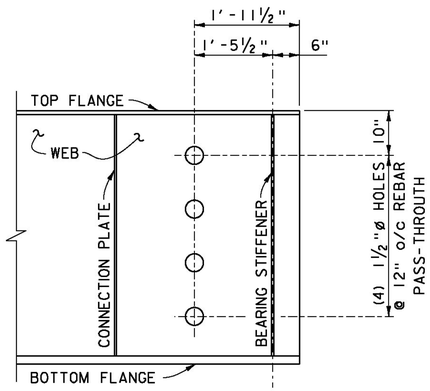

• DETAIL TYPICAL FOR ALL GIRDERS EACH END.

GIRDER END DETAIL

SCALE: 1½" = 1'-0"

NOTE:
CVN - SHALL MEET CHARPY V-NOTCH REQUIREMENTS FOR MAIN MEMBERS AS INDICATED IN SECTION 714 OF THE STANDARD SPECIFICATION

PROJECT NAME:	STOWE
PROJECT NUMBER:	BRF 0235 (11)

FILE NAME: s87e052sup.dgn		PLOT DATE:	28-JUL-2014
PROJECT LEADER:	C. CARLSON	DRAWN BY:	D. KARABEGOVIC
DESIGNED BY:	D. PETERSON	CHECKED BY:	M. LONGSTREET
FRAMING PLAN		SHEET	30 OF 64

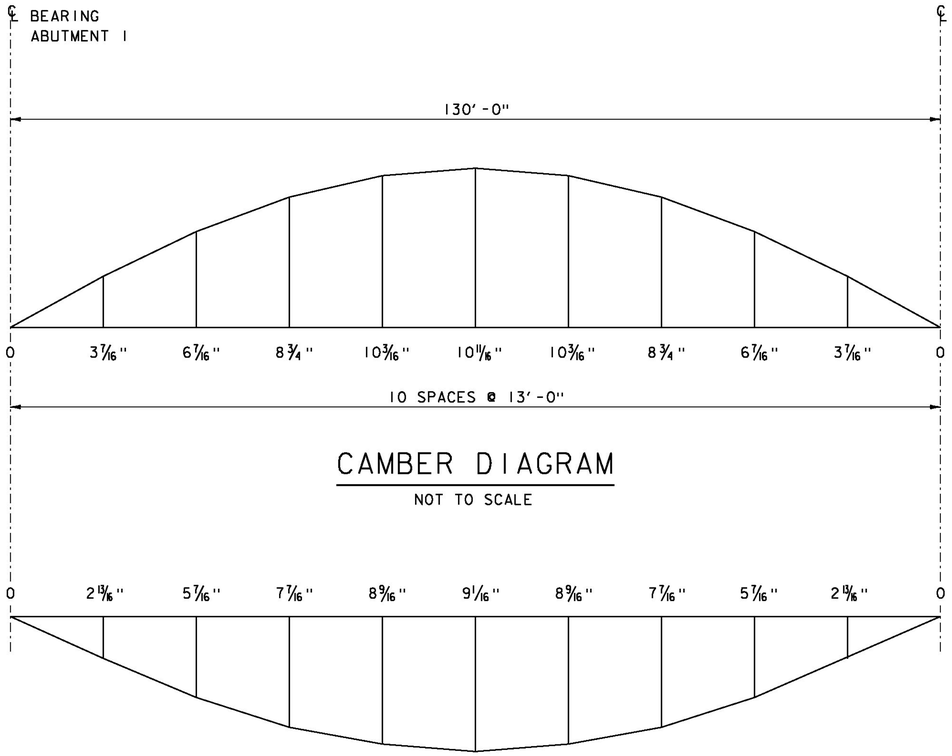

CAMBER DIAGRAM

NOT TO SCALE

DEAD LOAD DEFLECTION DIAGRAM

NOT TO SCALE

NOTE:
DEFLECTION INCLUDES, GIRDER, CROSS FRAMES, DECK, SIDEWALK, COVERED WALKWAY , AND RAILING.

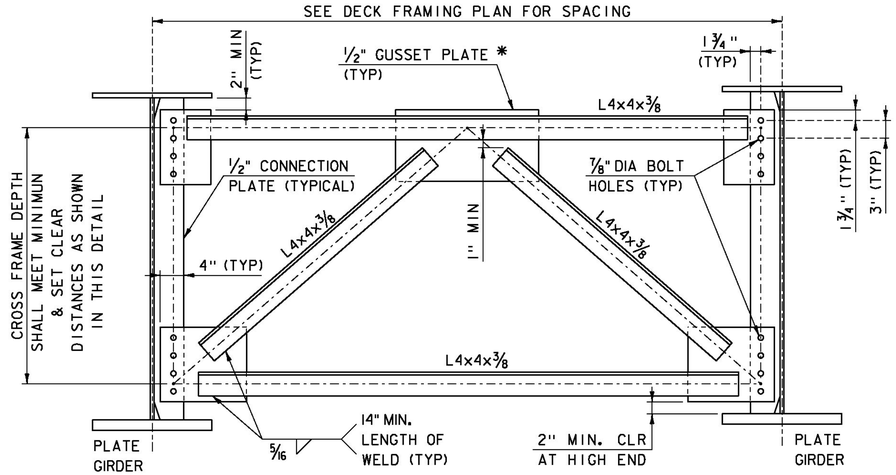

INTERMEDIATE CROSSFRAME DETAILS

SCALE 1" = 1'-0"

* THE FABRICATOR MAY ALTER THE SHAPE OF THE GUSSET PLATES AS REQUIRED TO MEET MINIMUM WELDING LENGTH AND TO MAINTAIN THE BOLT HOLE LOCATIONS.

PROJECT NAME: STOWE	
PROJECT NUMBER: BRF 0235 (11)	
FILE NAME: s87e052sup.dgn	PLOT DATE: 28-JUL-2014
PROJECT LEADER: C. CARLSON	DRAWN BY: D. KARABEGOVIC
DESIGNED BY: D. PETERSON	CHECKED BY: M. LONGSTREET
CAMBER & DEFLECTION	SHEET 31 OF 64

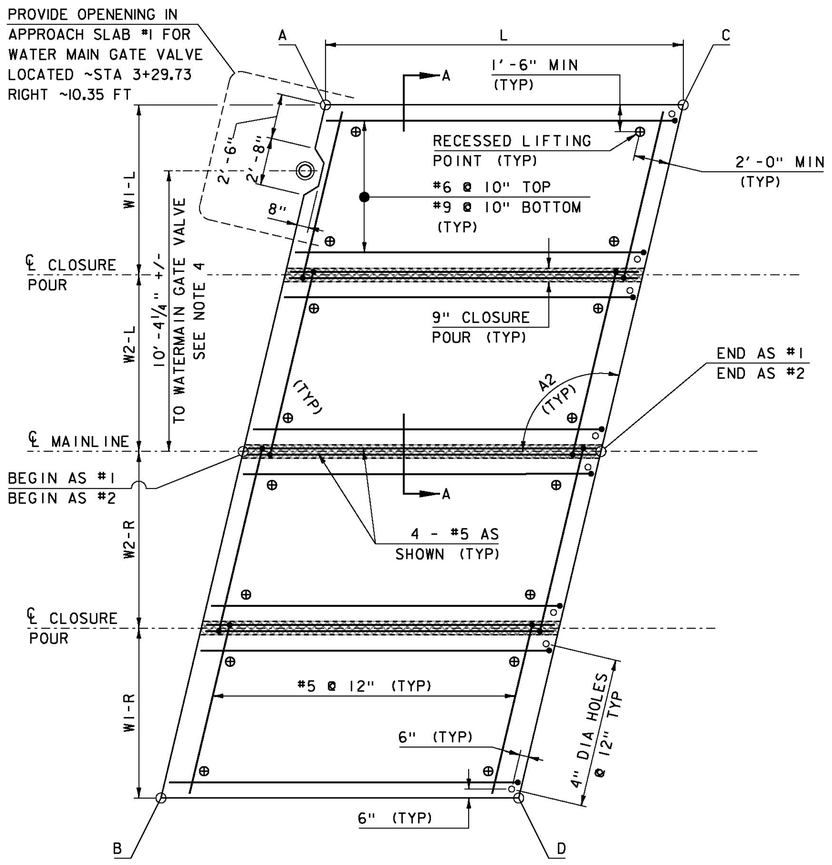

APPROACH SLAB #1 PLAN VIEW

NOT TO SCALE

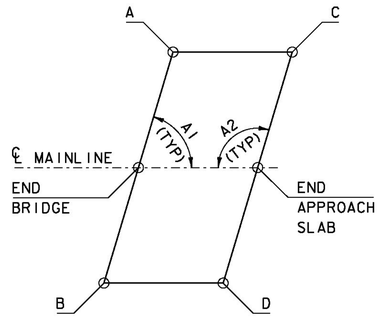

APPROACH SLAB #2 PLAN VIEW

NOT TO SCALE

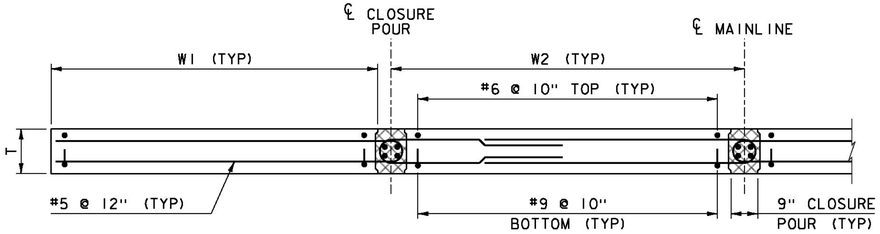

SECTION A-A

SCALE 1/2" = 1'-0"

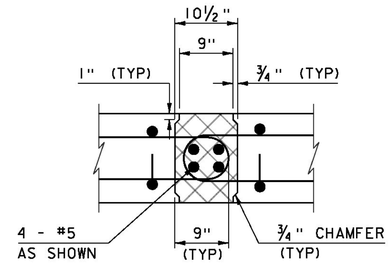

CONNECTION DETAIL SECTION

SCALE 1" = 1'-0"

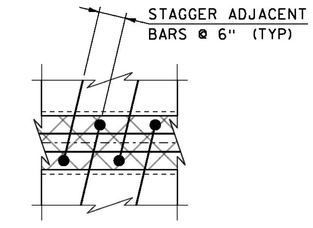

CONNECTION DETAIL PLAN

SCALE 1" = 1'-0"

APPROACH SLAB #1			
	STATION	OFFSET	ELEVATION
1A	3+30.97	14.00	711.09
BEGIN AS #1	3+27.22	0.00	711.52
1B	3+22.89	16.17	711.89
1C	3+50.97	14.00	711.85
END AS #1	3+47.22	0.00	711.92
1D	3+42.89	16.17	711.17

1. LIFTING POINTS SHALL BE DESIGNED BY FABRICATOR AND SUBMITTED WITH CALCULATIONS.
2. REINFORCING STEEL FOR APPROACH SLAB #2 SHALL BE SIMILAR TO THAT SHOWN FOR APPROACH SLAB #1
3. CLOSURE POUR CONCRETE SHALL BE PAID FOR UNDER ITEM 900.608 SPECIAL PROVISION (HIGH PERFORMANCE CONCRETE, RAPID SET) (FPQ)
4. APPROACH SLAB #1 HAS A WATER MAIN GATE VALVE BLOCK-OUT OPENING, THE BLOCK-OUT LOCATION AND SIZE IS TO BE FIELD VERIFIED PRIOR TO FABRICATION.

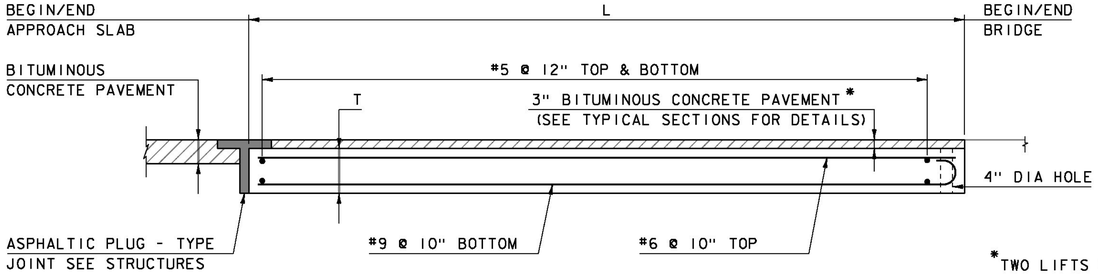

APPROACH SLAB ELEVATION VIEW

SCALE 1/2" = 1'-0"

*TWO LIFTS OF 1 1/2 BITUMINOUS CONCRETE PAVEMENT TYPE IIIS

T	1'-3"
L	20'-0"
W1-R	8'-1"
W2-R	8'-1"
W1-L	7'-0"
W2-L	7'-0"

APPROACH SLAB #1	A1	75°
	A2	105°

APPROACH SLAB #2	A1	75°
	A2	105°

APPROACH SLAB DIMENSIONS

APPROACH SLAB #2			
	STATION	OFFSET	ELEVATION
2A	4+82.53	14.00	714.48
BEGIN AS #2	4+78.78	0.00	714.55
2B	4+74.44	16.17	714.30
2C	5+02.86	13.95	714.88
END AS #2	4+98.78	0.00	714.95
2D	4+94.44	16.17	714.69

APPROACH SLAB ELEVATIONS

ALL ELEVATIONS ARE TOP OF SLAB

NOTE:

NF = NEAR FACE
FF = FAR FACE
EF = EACH FACE
3" CLEAR, UNLESS OTHERWISE SPECIFIED ON THE PLANS.
2'-7" BAR LAP UNLESS OTHERWISE SPECIFIED ON THE PLANS.

PROJECT NAME: STOWE
PROJECT NUMBER: BRF 0235 (11)

FILE NAME: s87E052appslab.dgn
PROJECT LEADER: C. CARLSON
DESIGNED BY: D. PETERSON
APPROACH SLAB DETAILS

PLOT DATE: 28-JUL-2014
DRAWN BY: D. KARABEGOVIC
CHECKED BY: J. LACROIX
SHEET 32 OF 64

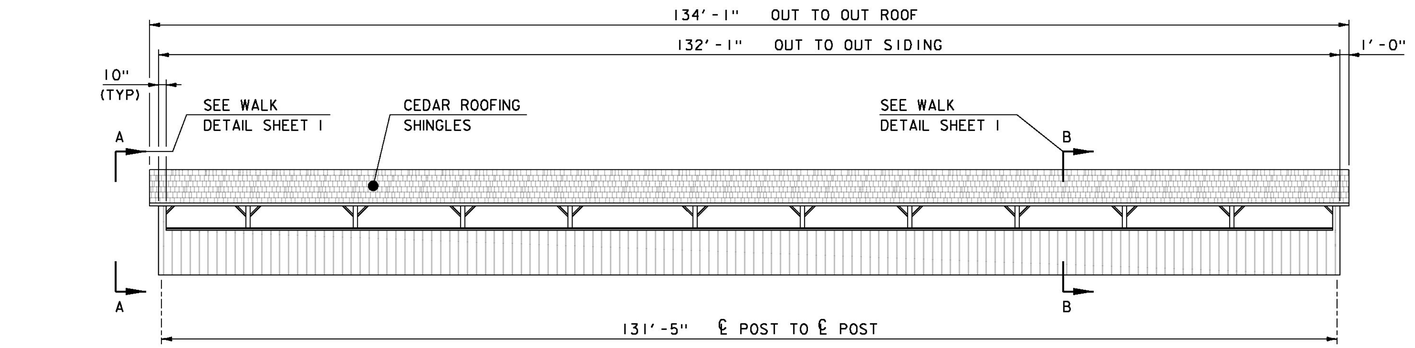

COVERED WALKWAY EAST ELEVATION

SCALE: 1/8" = 1'-0" (LOOKING WEST)

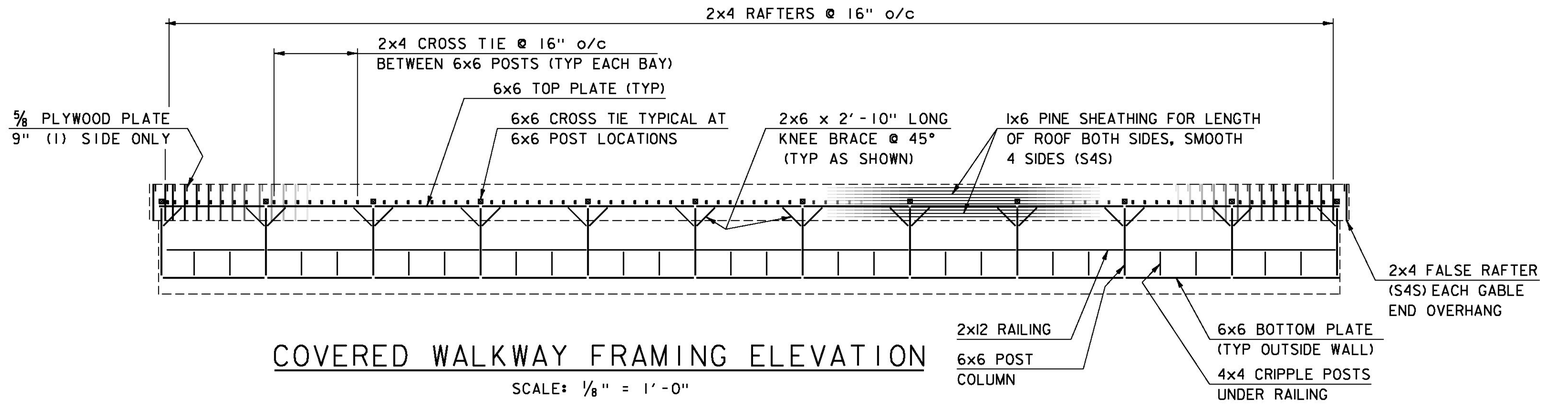

COVERED WALKWAY FRAMING ELEVATION

SCALE: 1/8" = 1'-0"

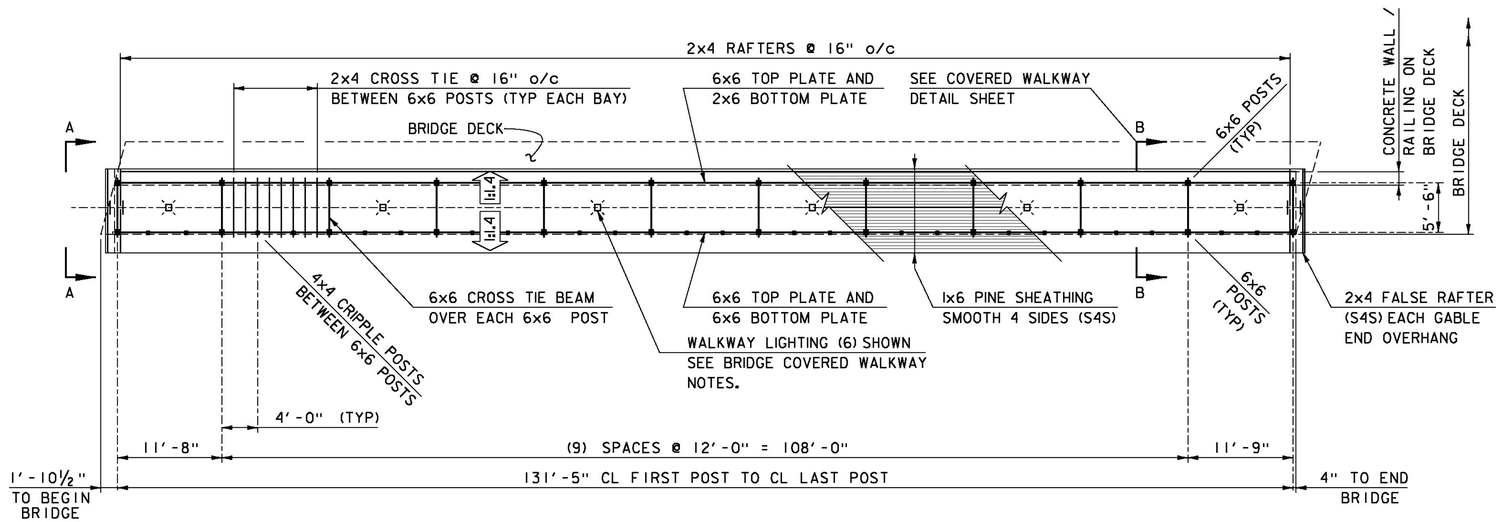

COVERED WALKWAY FRAMING PLAN

SCALE: 1/8" = 1'-0"

BRIDGE COVERED WALKWAY NOTES:

1) ALL LUMBER IN WOODEN WALKWAY SHALL BE FULL SAWN, ROUGH FINISH, EXCEPT AS NOTED, SMOOTH 4 SIDES (S4S) FINISHED DIMENSION FOR DRESSED LUMBER).

2) STRUCTURAL POST, GIRDERS, AND BRACING SHALL BE FULL SAWN, ROUGH FINISH, EASTERN SPRUCE GRADE NO.1, UNLESS NOTED OTHERWISE ON PLANS.

3) THE PINE BOARD SIDING SHALL BE FULL SAWN, ROUGH FINISH, EASTERN WHITE PINE GRADE NO.1. THE SIDING SHALL BE PLACED VERTICALLY, PERPENDICULAR TO BRIDGE GRADE, WITH A 1" GAP BETWEEN EACH BOARD.

4) PINE SHEATHING ON THE ROOF SHALL BE 1x6 NUMBER 2 PINE OR BETTER.

5) ALL EXTERIOR SIDING, TRIM AND ROOF SHEETING NAILS SHALL BE 2 1/2" STAINLESS STEEL SIDING NAILS.

6) ROOFING SHALL BE RED CEDAR SHINGLES, 18" NUMBER 2 GRADE, RED LABEL.

7) USE 1 1/2" 14 GAUGE DOUBLE HOT-DIP GALVANIZED CEDAR SHINGLE AND SHAKE NAILS FOR ROOF SHINGLES, (2) NAILS PER SINGLE.

8) FINISH - THE CEDAR SHINGLES SHALL BE LEFT NATURAL. ALL OTHER EXTERIOR SURFACES SHALL BE GIVEN TWO COATS OF BLEACHING OIL IN ACCORDANCE WITH THE MANUFACTURER SPECIFICATIONS. ANY FIRE RETARDANTS SHALL BE APPLIED AFTER BLEACHING OILS ARE APPLIED. SEE GENERAL NOTES SHEET FOR FIRE RETARDANT APPLICATIONS.

9) THE WOOD AND TIMBER COVERED WALKWAY WILL BE PAID FOR UNDER ITEM 900.645 SPECIAL PROVISION (COVERED WALKWAY).

10) THE BARRIER WALL IS NOT CONSIDERED PART OF THE COVERED WALKWAY IT WILL BE CONSTRUCTED AS A SEPARATE ITEM.

11) LIGHT FIXTURES AND WIRING ON COVERED WALKWAY SHALL BE PAID FOR UNDER ITEM 900.645 SPECIAL PROVISION (COVERED WALKWAY).

12) SIX 29 WATT (MIN.) LED LIGHT FIXTURES SHALL BE INSTALLED IN THE BAYS SHOWN IN THE THE COVERED WALKWAY FRAMING PLAN.

13) ALL TIMBER MEMBER CONNECTIONS NOT SPECIFICALLY DETAILED IN THE PLANS SHALL FOLLOW STANDARD WOOD FRAMING PRACTICES, AS APPROVED BY THE RESIDENT ENGINEER.

14) PRESSURE TREATED (PT) SILL AND BOTTOM PLATES SHALL BE FULL SAWN, ROUGH FINISH.

15) ALL 1/4" LAG BOLTS SHALL BE ZINC PLATED, HEX HEAD LAG SCREWS WITH A 3/4" WASHER, OR EQUIVALENT STRUCTURAL WOOD SCREW.

16) ANY AND ALL BOLTS USED SHALL HAVE APPROPRIATELY SIZED PILOT HOLES DRILLED TO INSURE PROPER THREAD GRIP AND PREVENT FRAMING MEMBERS FROM DAMAGE.

17) ALL DIMENSIONS SHOWN FOR COVERED WALKWAY WOOD FRAMING AND WOOD SHEETING ARE IN INCHES UNLESS OTHERWISE NOTED.

NOTE: DIMENSION IN INCHES UNLESS OTHERWISE NOTED.

PROJECT NAME: STOWE
PROJECT NUMBER: BRF 0235 (11)

FILE NAME: s87e052walk.dgn
PROJECT LEADER: C. CARLSON
DESIGNED BY: D. PETERSON
WALK FRAMING PLAN & ELEVATIONS

PLOT DATE: 28-JUL-2014
DRAWN BY: M. LONGSTREET
CHECKED BY: J. LACROIX
SHEET 33 OF 64

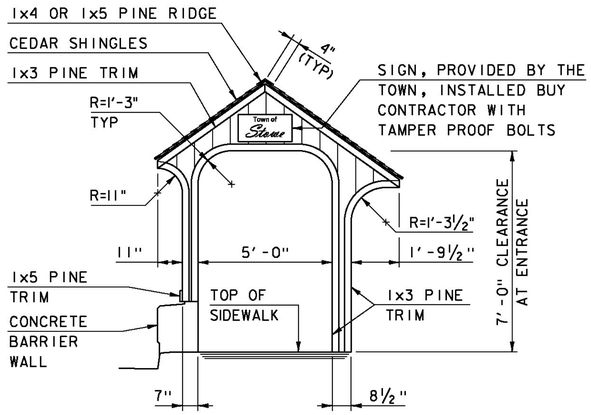

ELEVATION A-A

SCALE: 3/8" = 1'-0"

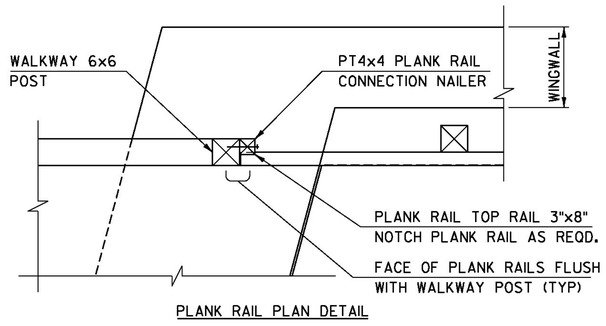

PLANK RAIL PLAN DETAIL

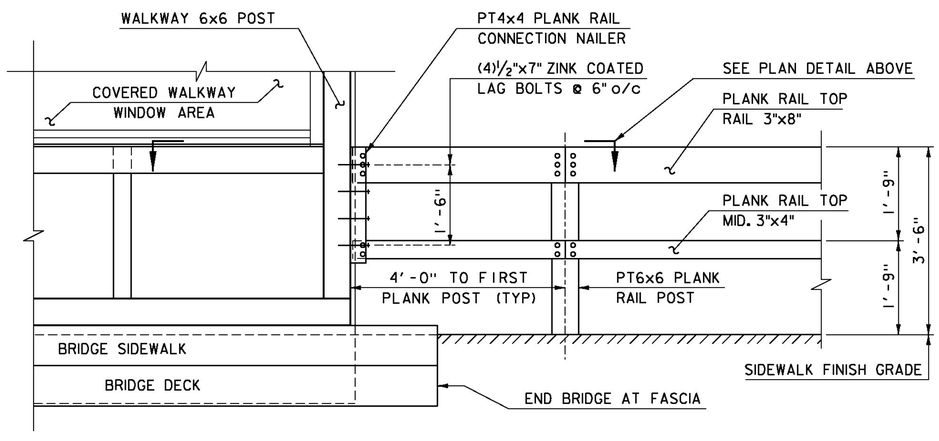

PLANK RAIL CONNECTION DETAIL

SCALE: 3/4" = 1'-0"

1) PLANK RAIL WILL BE PAID FOR UNDER CONTRACT ITEM 621.15.

2) THE PT4x4 AND (4) ½"x7" LAG BOLTS WILL BE INCLUDED IN THE COVERED WALKWAY SPECIAL PROVISION ITEM.

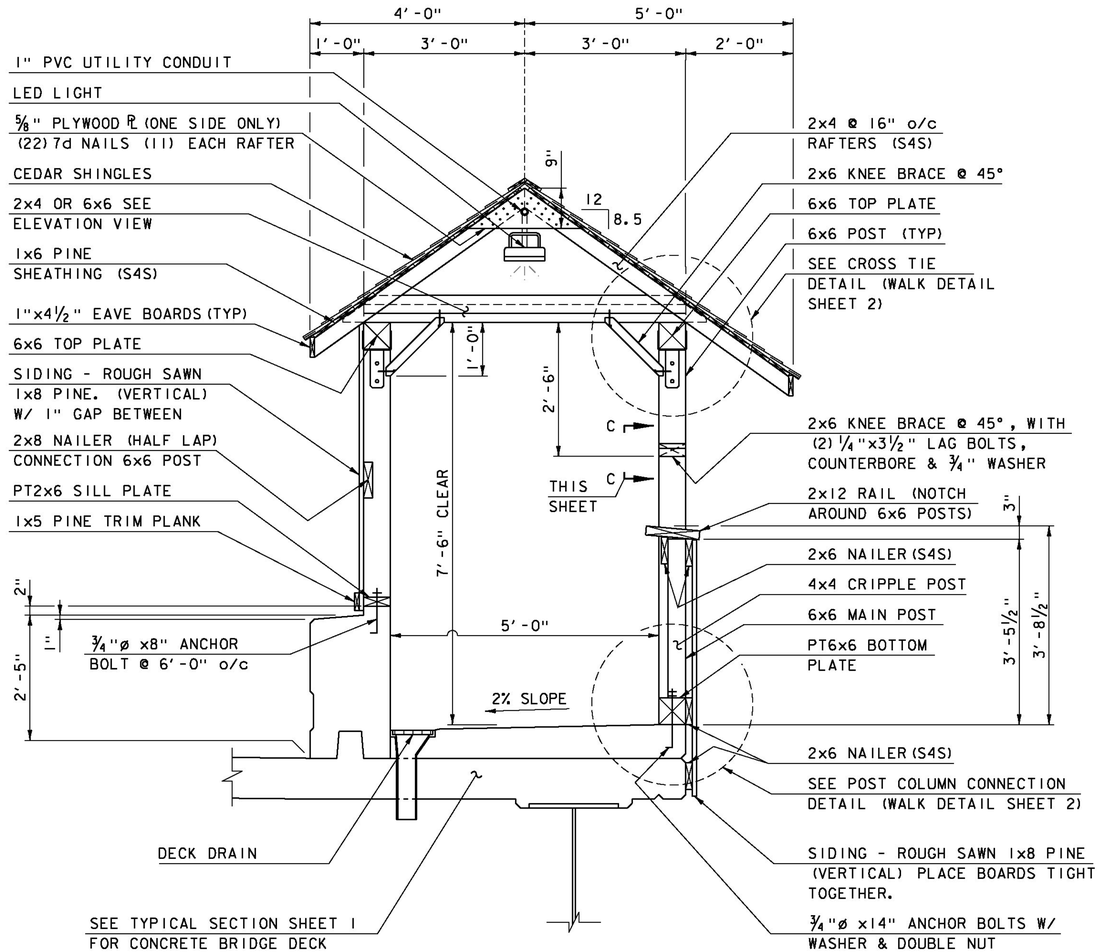

SECTION B-B

SCALE: 3/4" = 1'-0"

1) SEE WALK FRAMING PLAN & ELEVATIONS SHEET FOR ADDITIONAL NOTES AND CONNECTIONS REQUIREMENTS.

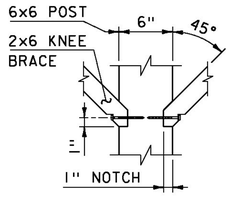

SECTION C-C

SCALE: 1½" = 1'-0"

NOTE: DIMENSION IN INCHES UNLESS OTHERWISE NOTED.

PROJECT NAME:	STOWE
PROJECT NUMBER:	BRF 0235 (11)

FILE NAME: s87e052walk.dgn	PLOT DATE: 28-JUL-2014
PROJECT LEADER: C. CARLSON	DRAWN BY: M. LONGSTREET
DESIGNED BY: D. PETERSON	CHECKED BY: J. LACROIX
WALK DETAIL SHEET 1	SHEET 34 OF 64

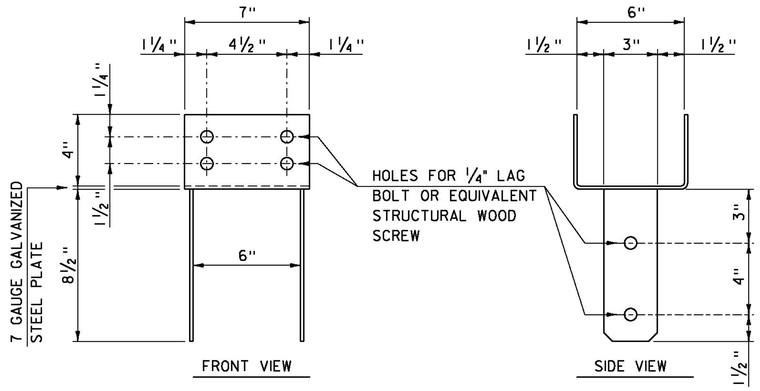

6x6 COLUMN CONNECTOR

SCALE: 3" = 1'-0"

1) THE 7 GAUGE GALVANIZED STEEL PLATE USED FOR CONNECTIONS HAS AN ASSUMED APPROXIMATE THICKNESS OF 0.138".

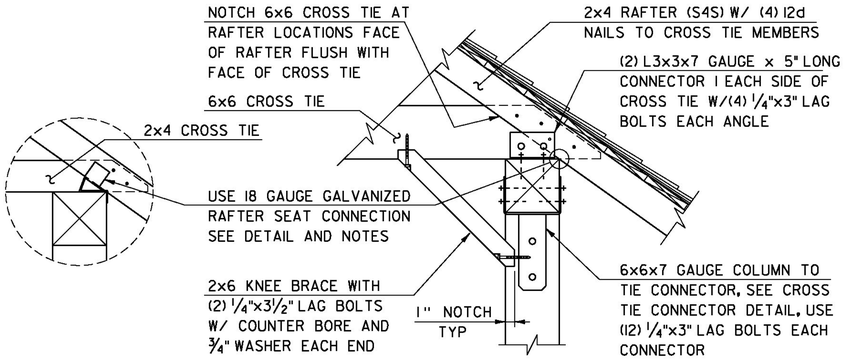

CROSS TIE DETAIL

SCALE: 1½" = 1'-0"

1) ALL ¼" LAG BOLTS SHALL BE ZINC PLATED, HEX HEAD LAG SCREWS WITH A ¾" WASHER, OR EQUIVALENT STRUCTURAL WOOD SCREW. PRE DRILL A PILOT HOLE FOR EACH BOLT.

2) ALL RAFTERS NOT LAPPED AND NOTCHED INTO A 6x6 CROSS TIE MEMBER SHALL BE CONNECTED TO THE 6x6 TOP PLATE MEMBER WITH AN 18 GAUGE, GALVANIZED STEEL, VARIABLE PITCH CONNECTION PLATE. THE RAFTERS SHALL ALSO BE NAILED TO THE 2x4 CROSS TIE MEMBERS WITH (2) 8d NAILS.

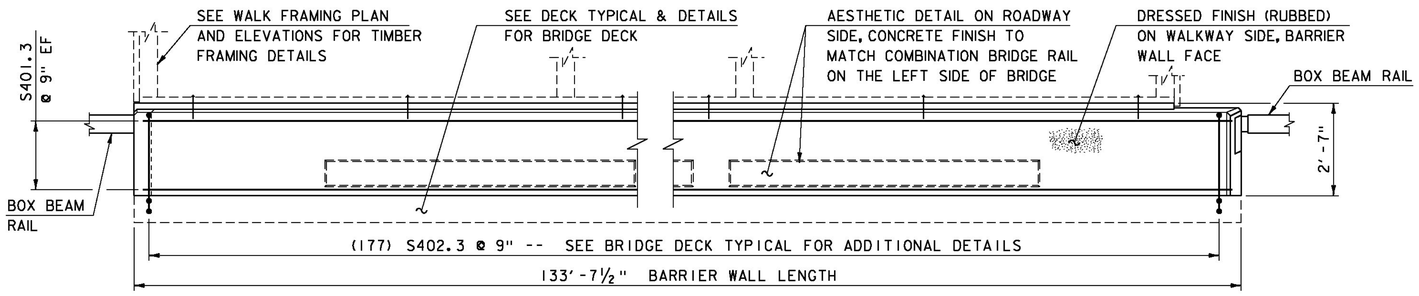

BARRIER WALL ELEVATION C-C

SCALE: ½" = 1'-0"

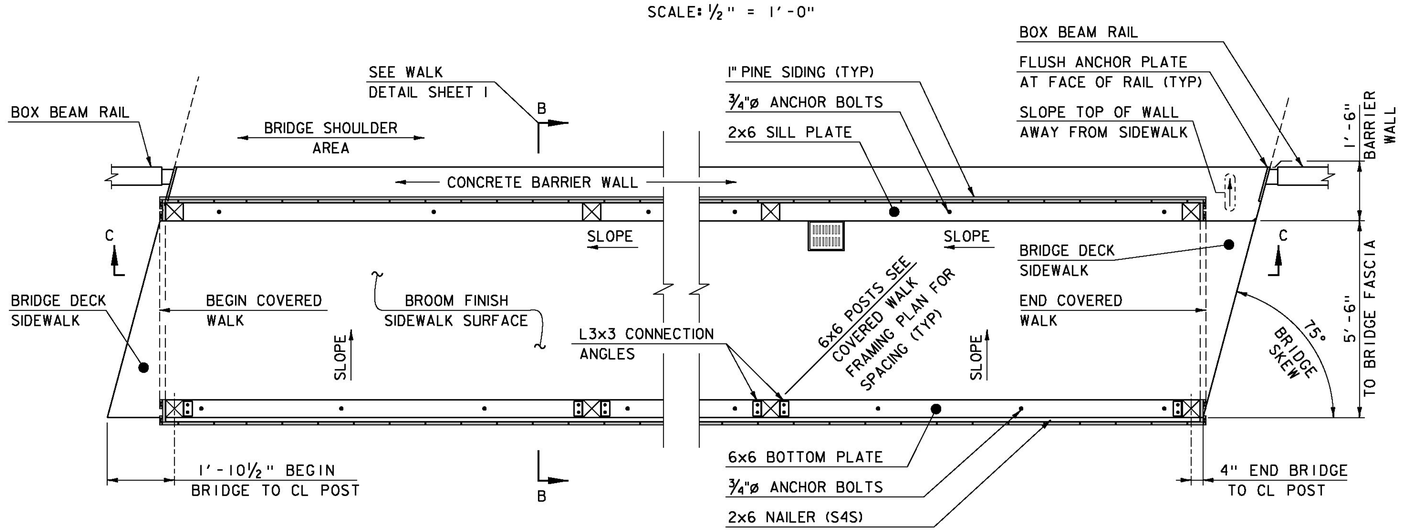

COVERED WALK PLAN DETAIL

SCALE: ½" = 1'-0"

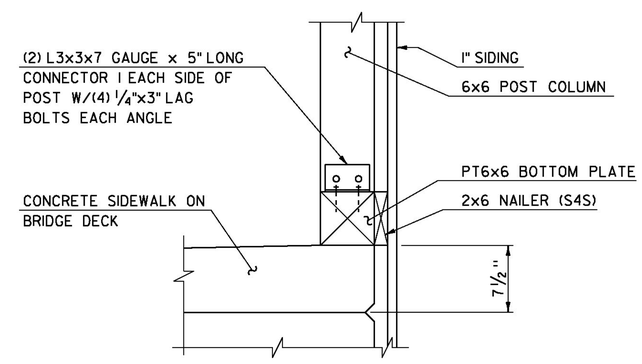

POST COLUMN CONNECTION DETAIL

SCALE: 1½" = 1'-0"

1) THE POST COLUMN CONNECTION ON THE CONCRETE BARRIER WALL SIDE OF THE WALK WAY SHALL HAVE (3) 16d GALVANIZED NAILS ON (2) SIDES.

2) THE 4x4 CRIPPLE POST SHALL HAVE (2) 16D GALVANIZED NAILS ON (2) SIDES.

NOTE: DIMENSION IN INCHES UNLESS OTHERWISE NOTED.

PROJECT NAME:	STOWE
PROJECT NUMBER:	BRF 0235 (11)

FILE NAME: s87e052walk.dgn	PLOT DATE: 28-JUL-2014
PROJECT LEADER: C. CARLSON	DRAWN BY: M. LONGSTREET
DESIGNED BY: D. PETERSON	CHECKED BY: J. LACROIX
WALK DETAIL SHEET 2	SHEET 35 OF 64

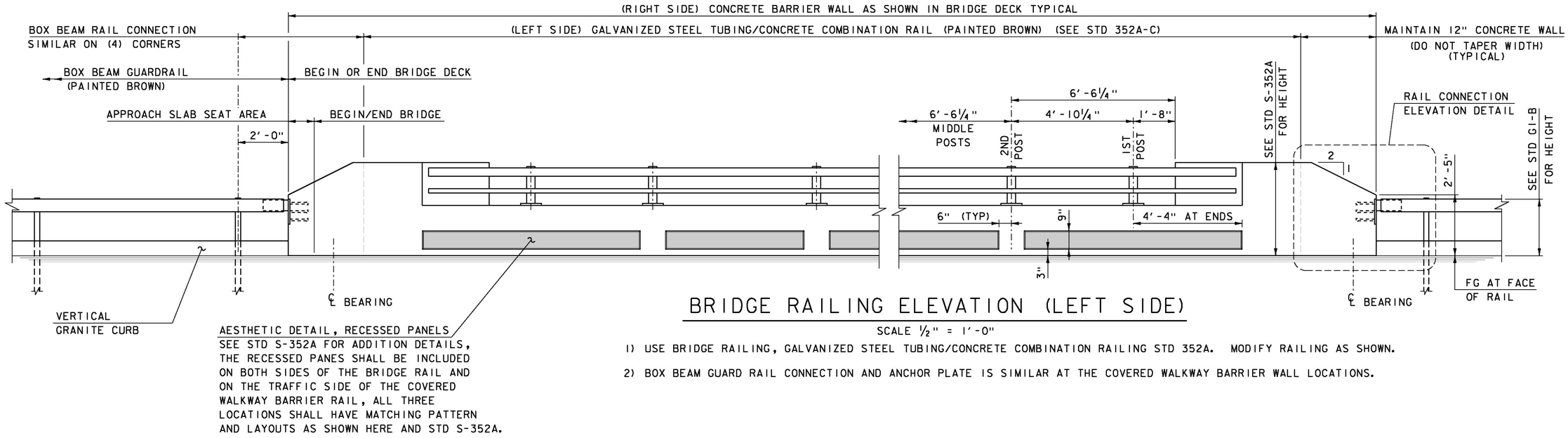

BRIDGE RAILING ELEVATION (LEFT SIDE)

SCALE ½" = 1'-0"

1) USE BRIDGE RAILING, GALVANIZED STEEL TUBING/CONCRETE COMBINATION RAILING STD 352A. MODIFY RAILING AS SHOWN.

2) BOX BEAM GUARD RAIL CONNECTION AND ANCHOR PLATE IS SIMILAR AT THE COVERED WALKWAY BARRIER WALL LOCATIONS.

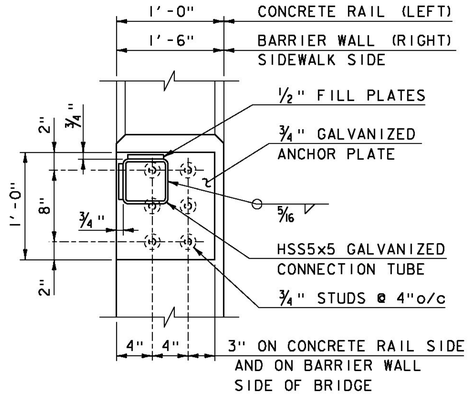

SECTION A-A

SCALE 1½" = 1'-0"

1) END OF BARRIER WALL AND CONCRETE RAIL NOT SQUARE, SEE "PLAN & ELEVATION" FOR SKEW ANGLE.

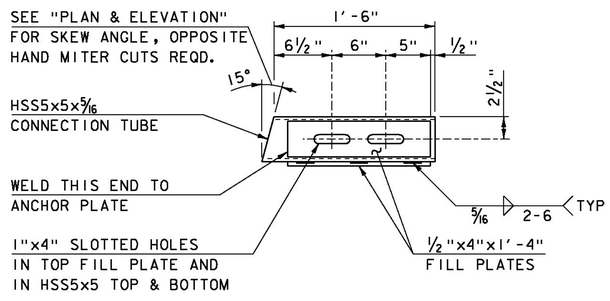

CONNECTION TUBE PLAN DETAIL

SCALE 1½" = 1'-0"

1) ALL HSS STEEL AND PLATE STEEL TO BE GALVANIZED UNLESS OTHERWISE NOTED.

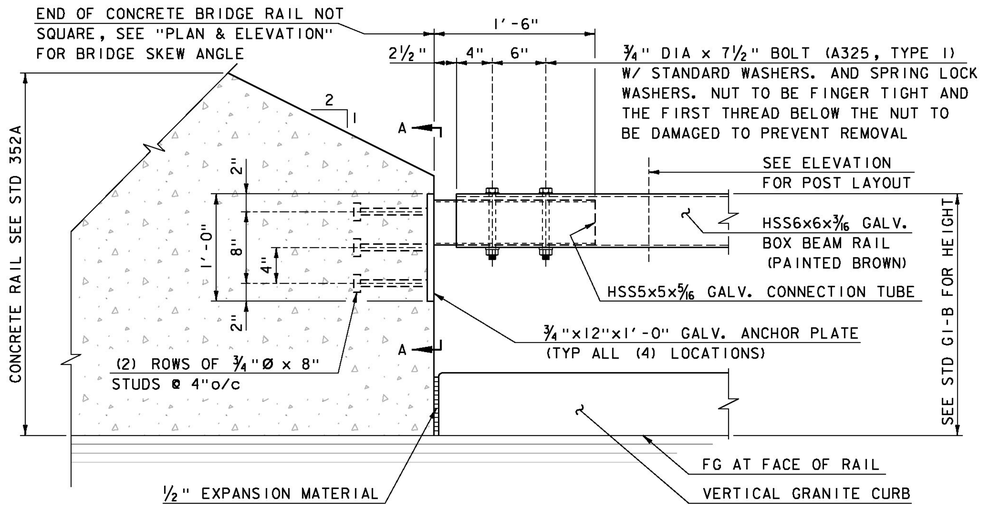

RAIL CONNECTION ELEVATION DETAIL

SCALE 1½" = 1'-0"

PROJECT NAME:	STOWE
PROJECT NUMBER:	BRF 0235 (11)
FILE NAME: s87e052rail.dgn	PLOT DATE: 28-JUL-2014
PROJECT LEADER: C. CARLSON	DRAWN BY: M. LONGSTREET
DESIGNED BY: D. PETERSON	CHECKED BY: J. LACROIX
BRIDGE & APPROACH RAIL DETAILS	SHEET 36 OF 64

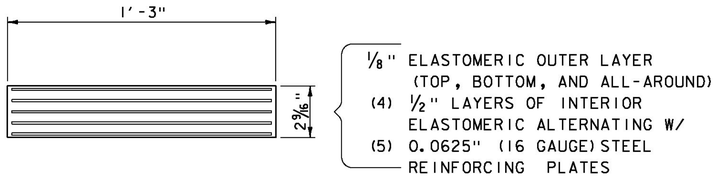

ELASTOMERIC BEARING PAD DETAIL

SCALE 3" = 1'-0"

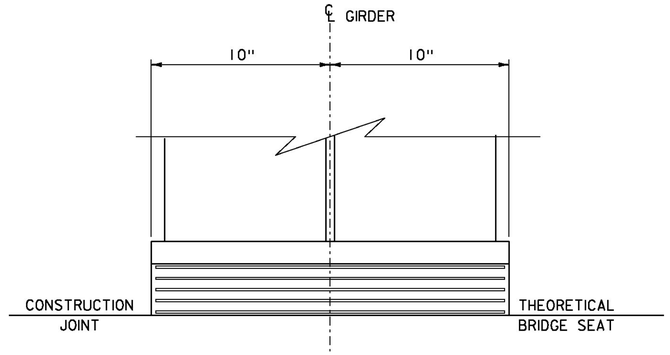

BEARING SECTION

SCALE 3" = 1'-0"

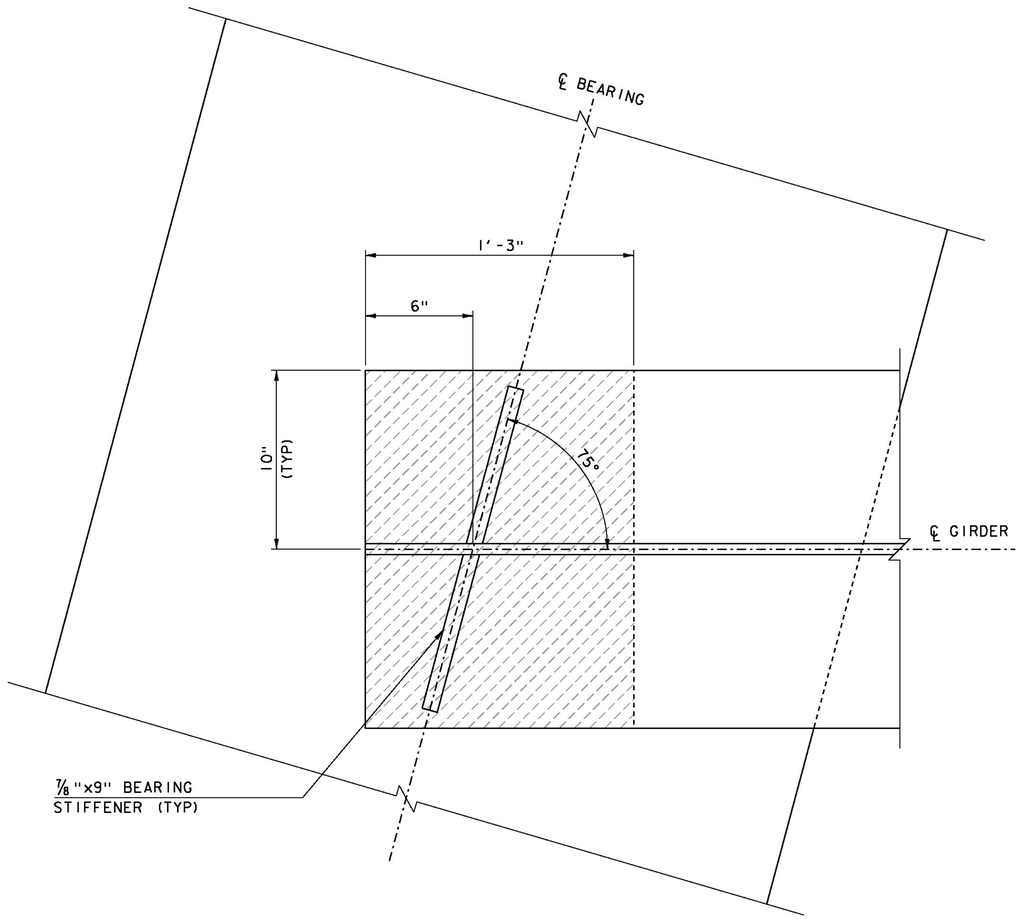

BEARING PLAN

SCALE 3" = 1'-0"

BEARING DEVICE NOTE

1. BEARINGS SHALL BE PAID FOR UNDER THE ITEM 531.17 "BEARING DEVICE ASSEMBLY, STEEL REINFORCED ELASTOMERIC PAD" AND SHALL CONFORM TO APPLICABLE SUBSECTIONS OF SECTIONS 531 AND 731.

PROJECT NAME: STOWE	
PROJECT NUMBER: BRF 0235 (11)	
FILE NAME: s87e052brg.dgn	PLOT DATE: 28-JUL-2014
PROJECT LEADER: C. CARLSON	DRAWN BY: D. PETERSON
DESIGNED BY: C. BURRALL	CHECKED BY: M. LONGSTREET
TEMPORARY BEARING DETAILS	SHEET 37 OF 64

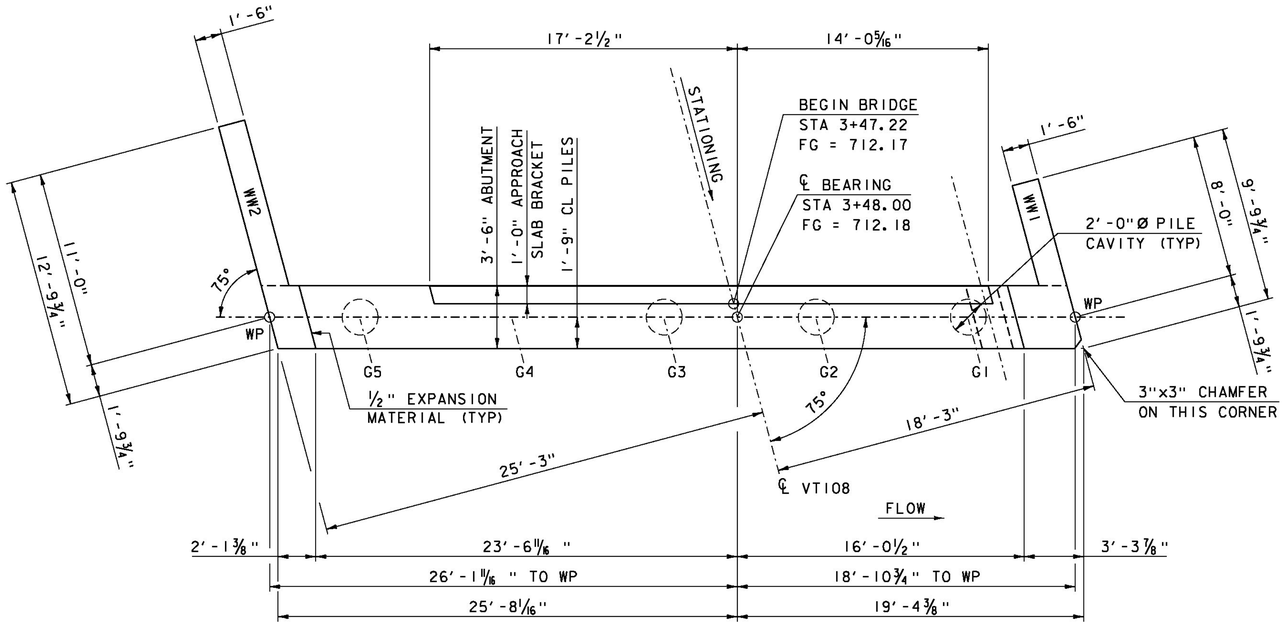

ABUTMENT 1 - PLAN

SCALE: ¼" = 1'-0"

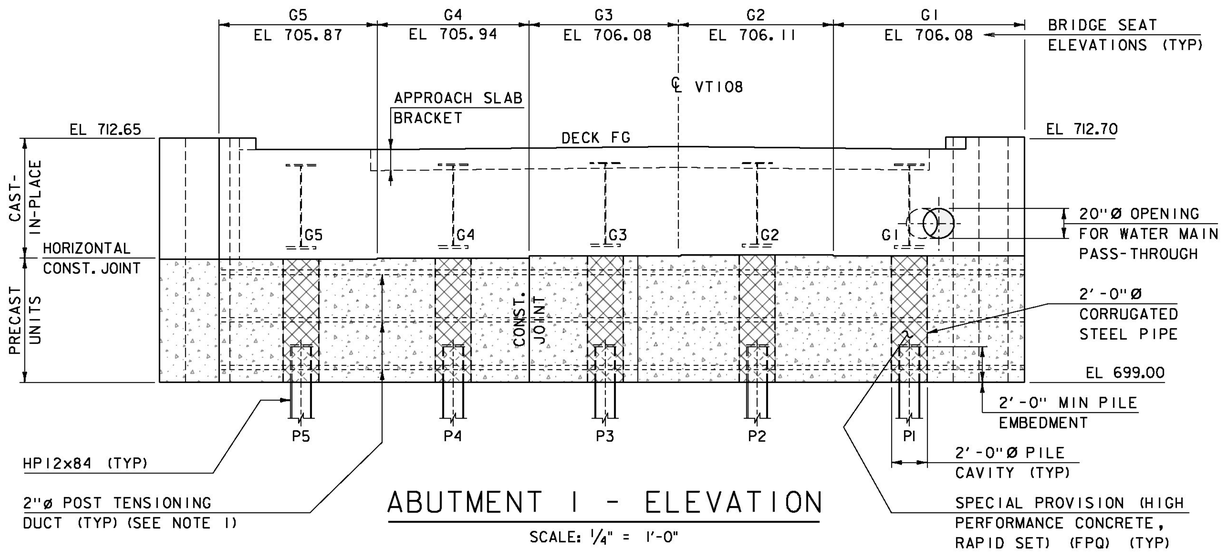

ABUTMENT 1 - ELEVATION

SCALE: ¼" = 1'-0"

1) POST TENSIONING AND ASSOCIATED ITEMS ONLY REQUIRED IF PILE CAP IS CONSTRUCTED OF MORE THAN ONE UNIT.

PRECAST ABUTMENT FABRICATION TOLERANCES	
LENGTH (OVERALL)	± ¼"
WIDTH (OVERALL)	± ¼"
DEPTH (OVERALL)	± ¼"
VARIATION FROM SPECIFIED END SQUARENESS OR SKEW	± ⅛" PER 12" WIDTH ± ½" MAXIMUM
LOCATION OF MECHANICAL SPLICE CONNECTORS MEASURED FROM COMMON REFERENCE POINT	± ¼"
LOCATION OF PROJECTING REINFORCING MEASURED FROM COMMON REFERENCE POINT	± ¼"
LOCAL SMOOTHNESS OF ANY SURFACE	± ¼" IN 10 FEET
LOCATION OF POST TENSIONING CONDUITS	± ¼"
LOCATION OF PILE CAVITIES	± 1"

PRECAST ABUTMENT ERECTION TOLERANCE	
VARIATION FROM SPECIFIED BRIDGE SEAT ELEVATION	± ⅛", ⅛" MAXIMUM BETWEEN ADJACENT UNITS
PLAN LOCATION OF ANY POINT MEASURED FROM COMMON REFERENCE POINT	± ½"
PLUMB	± ¼" IN 10 FEET ± ½" MAXIMUM

NOTE:

NF = NEAR FACE
FF = FAR FACE
EF = EACH FACE
▲ = CUT TO FIT IN FIELD
3" CLEAR, UNLESS OTHERWISE SPECIFIED ON THE PLANS.
2'-2" BAR LAP UNLESS OTHERWISE SPECIFIED ON THE PLANS.

PROJECT NAME: STOWE
PROJECT NUMBER: BRF 0235 (11)

FILE NAME: s87e052sub.dgn
PROJECT LEADER: C. CARLSON
DESIGNED BY: D. PETERSON
ABUTMENT #1 PLAN & ELEVATION
PLOT DATE: 28-JUL-2014
DRAWN BY: M. LONGSTREET
CHECKED BY: C. BURRALL
SHEET 38 OF 64

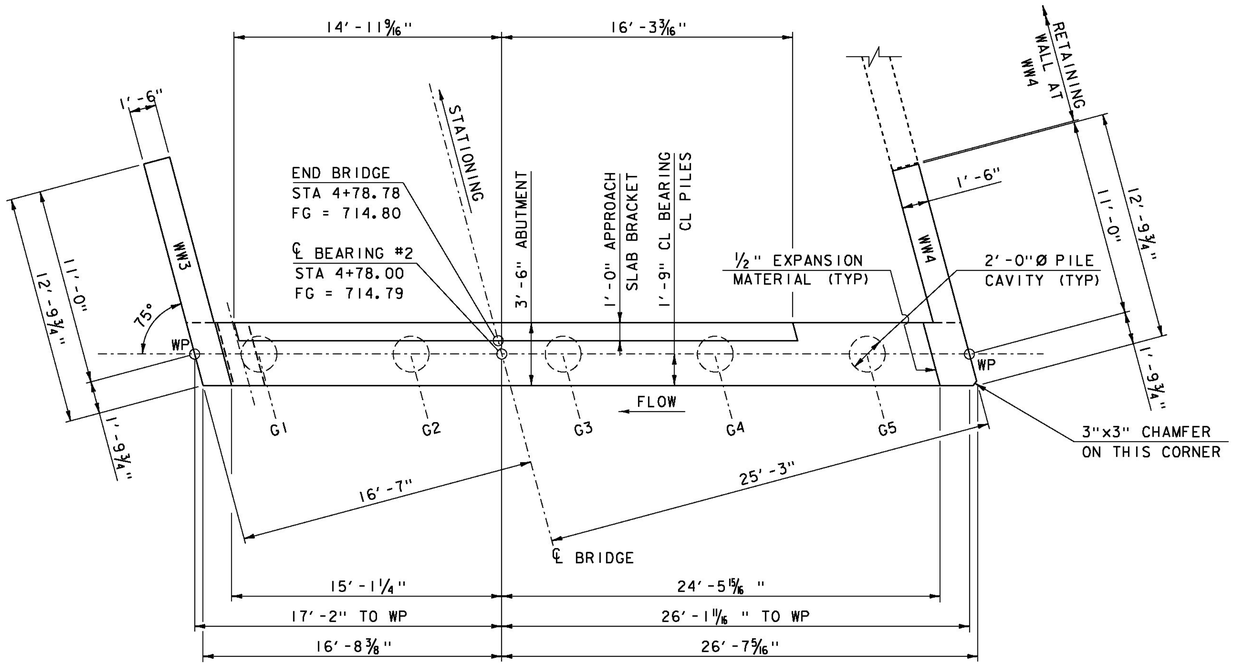

ABUTMENT 2 - PLAN

SCALE: 1/4" = 1'-0"

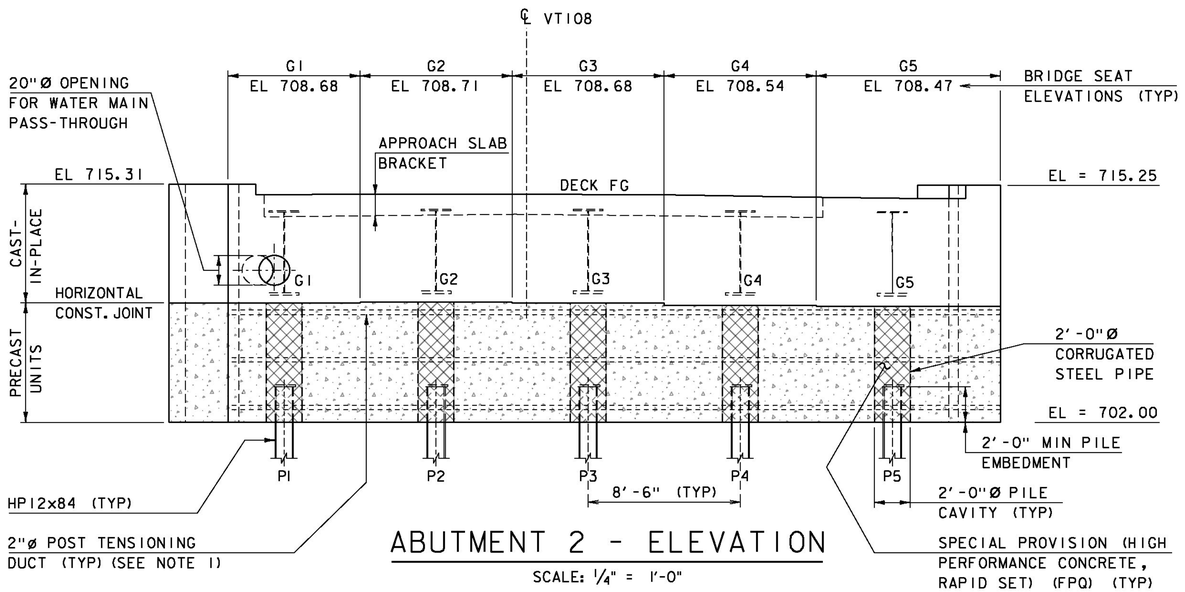

ABUTMENT 2 - ELEVATION

SCALE: 1/4" = 1'-0"

1) POST TENSIONING AND ASSOCIATED ITEMS ONLY REQUIRED IF PILE CAP IS CONSTRUCTED OF MORE THAN ONE UNIT.

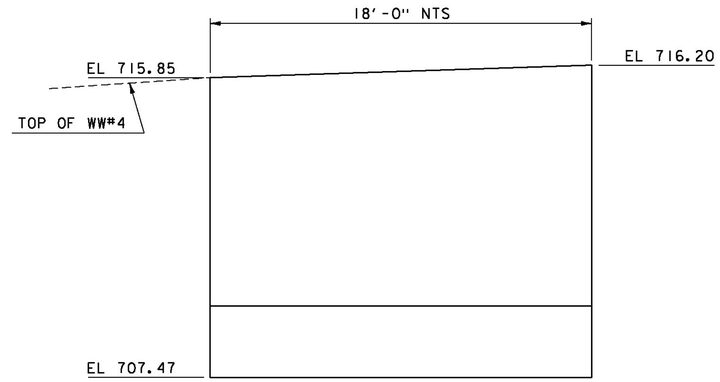

RETAINING WALL ELEVATION

SCALE: 1/2" = 1'-0"

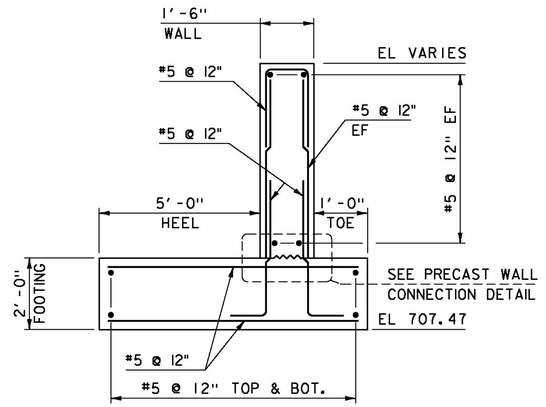

RETAINING WALL TYPICAL

SCALE: 1/2" = 1'-0"

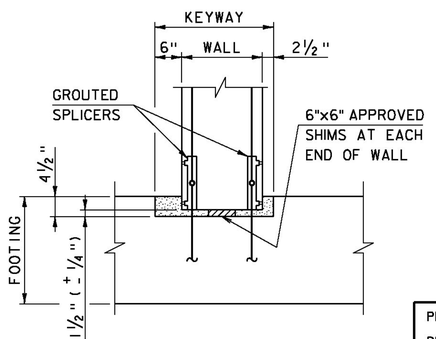

PRECAST WALL CONNECTION DETAIL

SCALE: 3/4" = 1'-0"

NOTE:

NF = NEAR FACE
FF = FAR FACE
EF = EACH FACE
▲ = CUT TO FIT IN FIELD
3" CLEAR, UNLESS OTHERWISE SPECIFIED ON THE PLANS.
2'-2" BAR LAP UNLESS OTHERWISE SPECIFIED ON THE PLANS.

PROJECT NAME: STOWE
PROJECT NUMBER: BRF 0235 (11)

FILE NAME: s87e052sub.dgn
PROJECT LEADER: C. CARLSON
DESIGNED BY: D. PETERSON
ABUTMENT #2 PLAN & ELEVATION

PLOT DATE: 28-JUL-2014
DRAWN BY: D. KARABEGOVIC
CHECKED BY: M. LONGSTREET
SHEET 39 OF 64

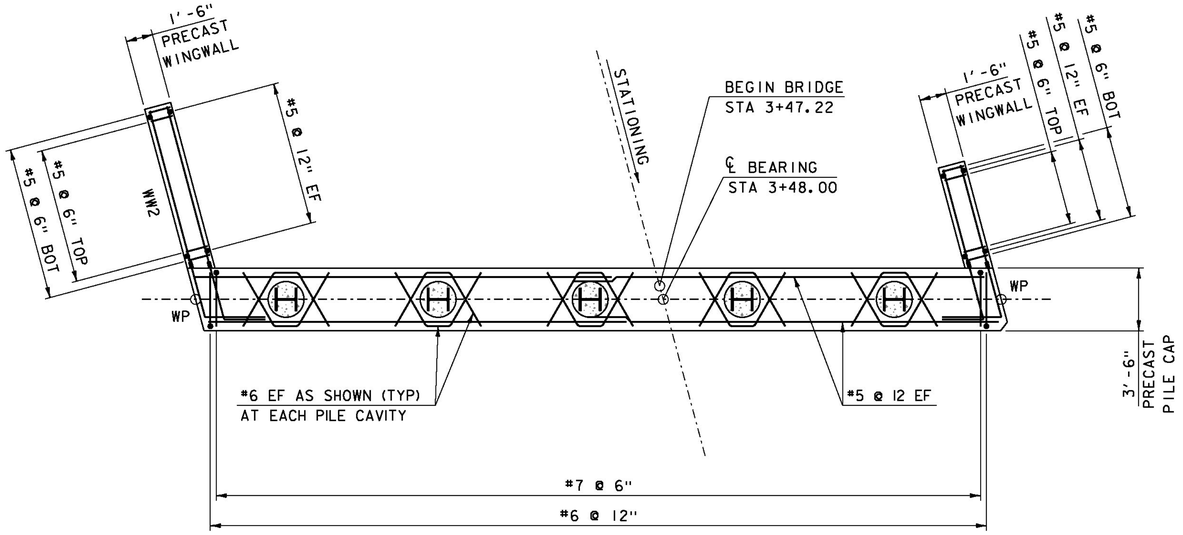

ABUTMENT 1 PRECAST - REINFORCING PLAN

SCALE: 1/4" = 1'-0"

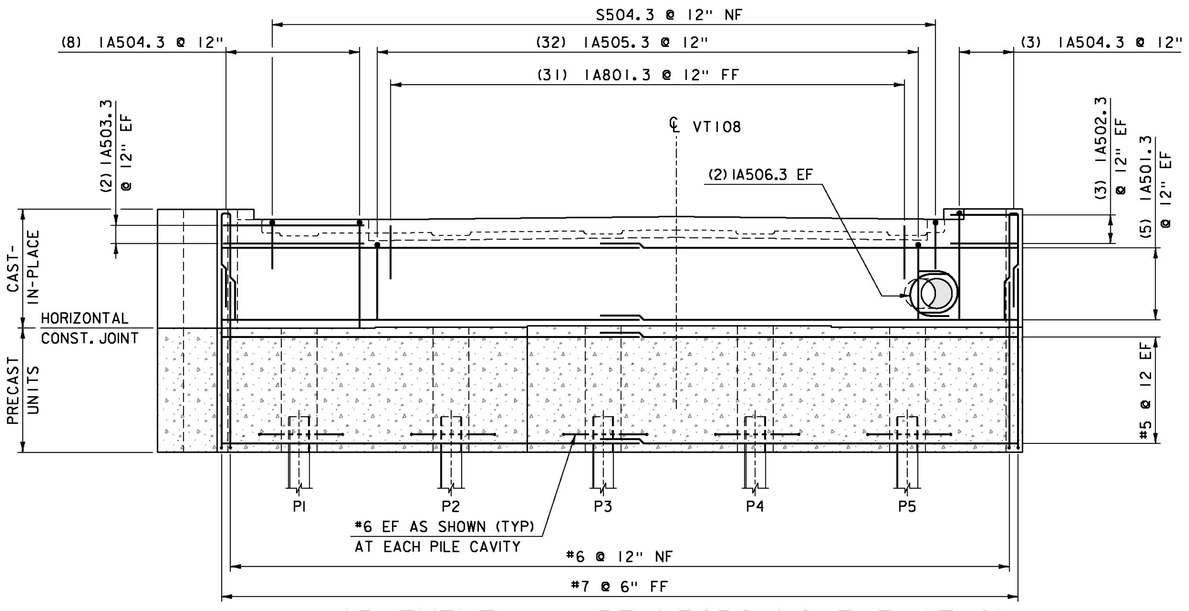

ABUTMENT 1 - REINFORCING ELEVATION

SCALE: 1/4" = 1'-0"

1) FIELD CUTTING ABUTMENT #1 & #2 REINFORCING STEEL SHALL BE PERMITTED AS REQUIRED TO FIT 20" DIA WATER MAIN PASS-THROUGH.

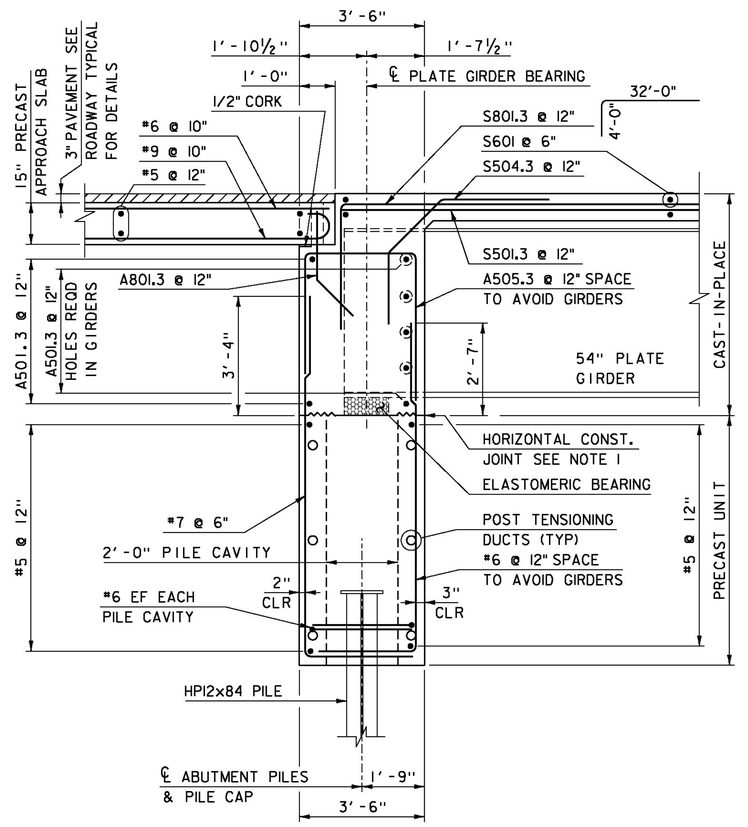

ABUTMENT 1 & 2 - TYPICAL

SCALE: 1/2" = 1'-0"

1) HORIZONTAL CONSTRUCTION JOINT SHALL BE ROUGHENED AS SHOWN IN SD-501.00. SURFACE SHALL BE ROUGHENED TO WITHIN 3" OF EACH FACE OF CONCRETE AND WITHIN 3" OF ELASTOMERIC BEARING PADS. SURFACE UNDER EACH BEARING PAD SHALL REMAIN SMOOTH.

NOTE:

NF = NEAR FACE
FF = FAR FACE
EF = EACH FACE
▲ = CUT TO FIT IN FIELD
3" CLEAR, UNLESS OTHERWISE SPECIFIED ON THE PLANS.
2'-2" BAR LAP UNLESS OTHERWISE SPECIFIED ON THE PLANS.

PROJECT NAME: STOWE
PROJECT NUMBER: BRF 0235 (11)

FILE NAME: s87e052sub.dgn
PROJECT LEADER: C. CARLSON
DESIGNED BY: D. PETERSON
ABUTMENT #1 REINFORCING DETAILS

PLOT DATE: 28-JUL-2014
DRAWN BY: M. LONGSTREET
CHECKED BY: C. BURRALL
SHEET 40 OF 64

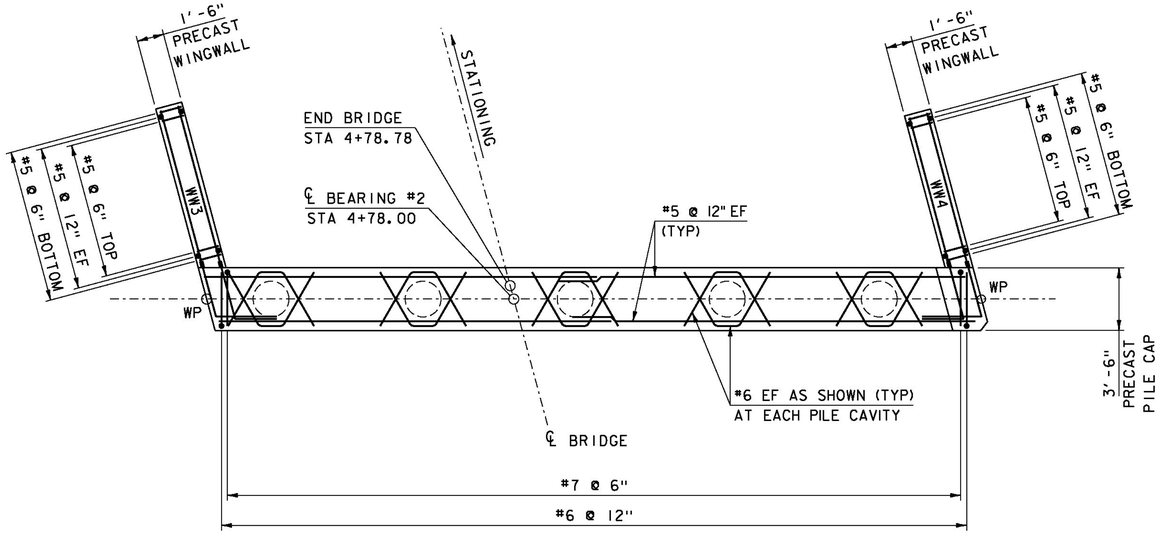

ABUTMENT 2 PRECAST - REINFORCEMENT PLAN

SCALE: 1/4" = 1'-0"

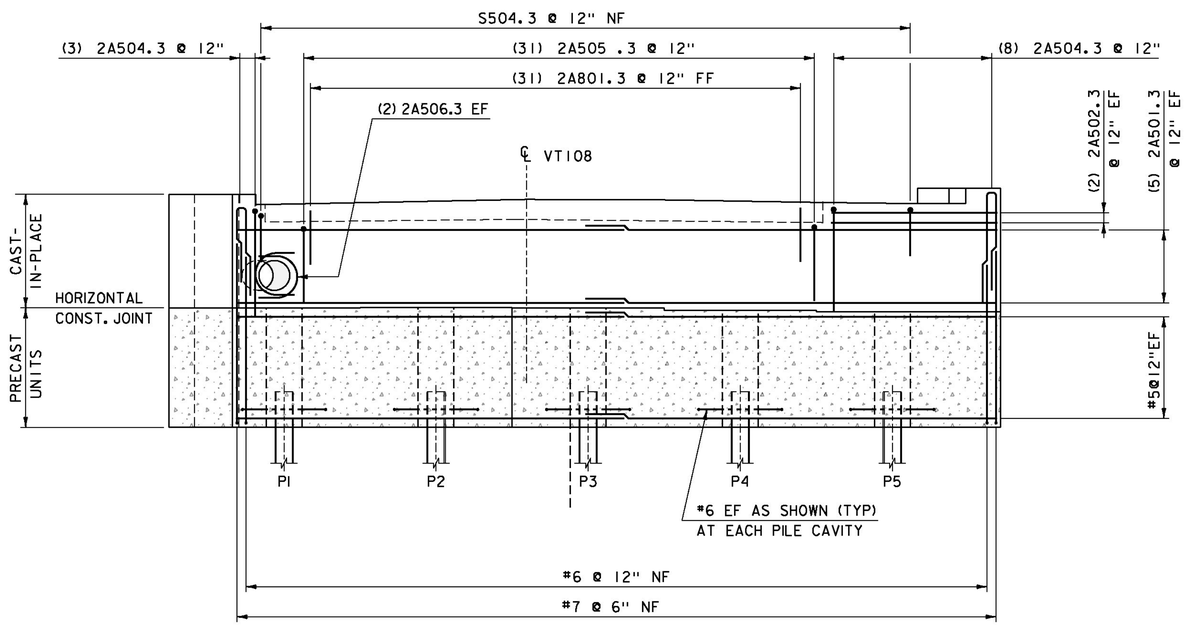

ABUTMENT 2 - REINFORCING ELEVATION

SCALE: 1/4" = 1'-0"

NOTE:

NF = NEAR FACE
FF = FAR FACE
EF = EACH FACE
▲ = CUT TO FIT IN FIELD
3" CLEAR, UNLESS OTHERWISE SPECIFIED ON THE PLANS.
2'-2" BAR LAP UNLESS OTHERWISE SPECIFIED ON THE PLANS.

PROJECT NAME:	STOWE
PROJECT NUMBER:	BRF 0235 (11)
FILE NAME: s87e052sub.dgn	PLOT DATE: 28-JUL-2014
PROJECT LEADER: C. CARLSON	DRAWN BY: D. KARABEGOVIC
DESIGNED BY: D. PETERSON	CHECKED BY: M. LONGSTREET
ABUTMENT #2 REINFORCING DETAILS	SHEET 41 OF 64

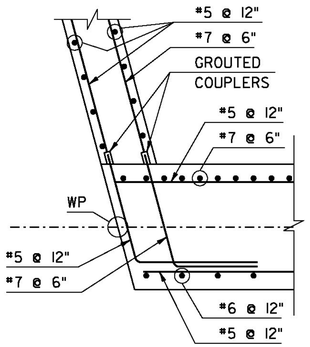

WW2 CORNER DETAIL PCU

SCALE: ½" = 1'-0"
(BELOW SEAT)

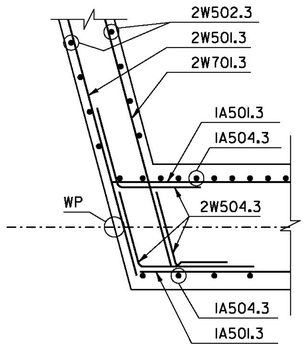

WW2 CORNER DETAIL CIP

SCALE: ½" = 1'-0"
(ABOVE SEAT)

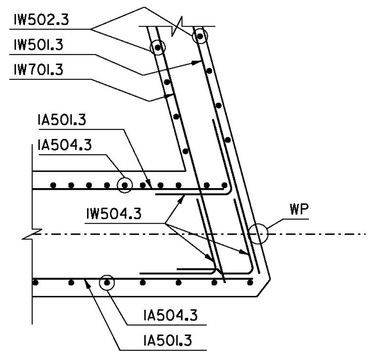

WW1 CORNER DETAIL CIP

SCALE: ½" = 1'-0"
(ABOVE SEAT)

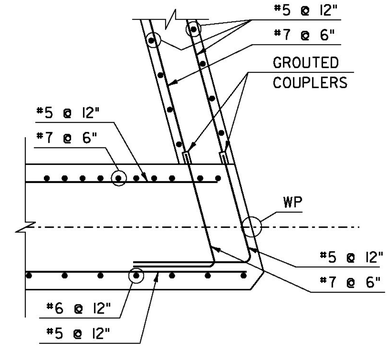

WW1 CORNER DETAIL PCU

SCALE: ½" = 1'-0"
(BELOW SEAT)

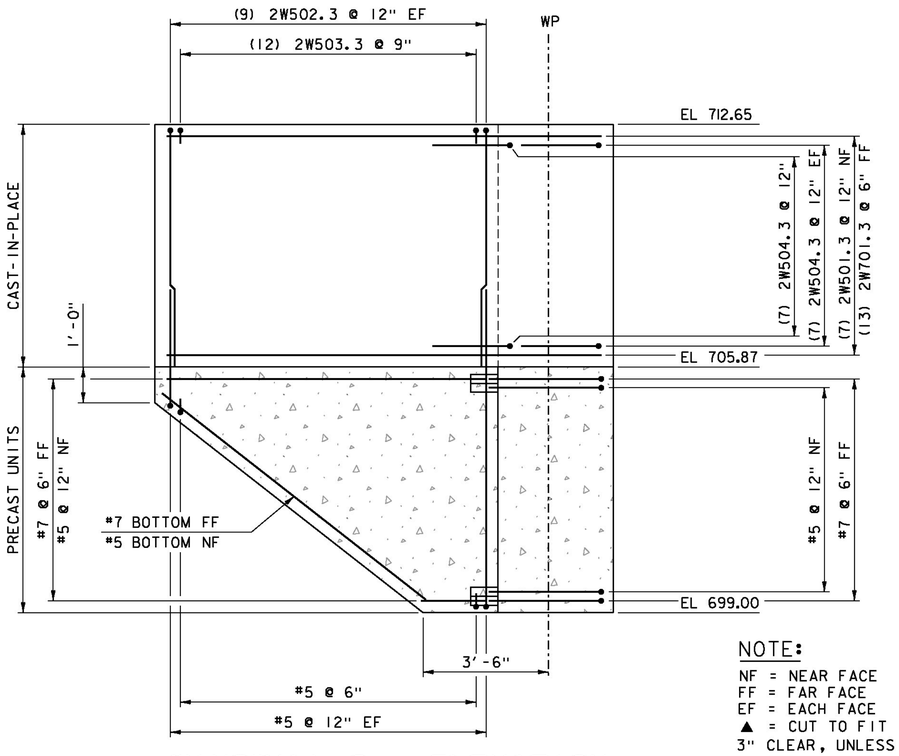

WINGWALL 2 - ELEVATION

SCALE: ½" = 1'-0"

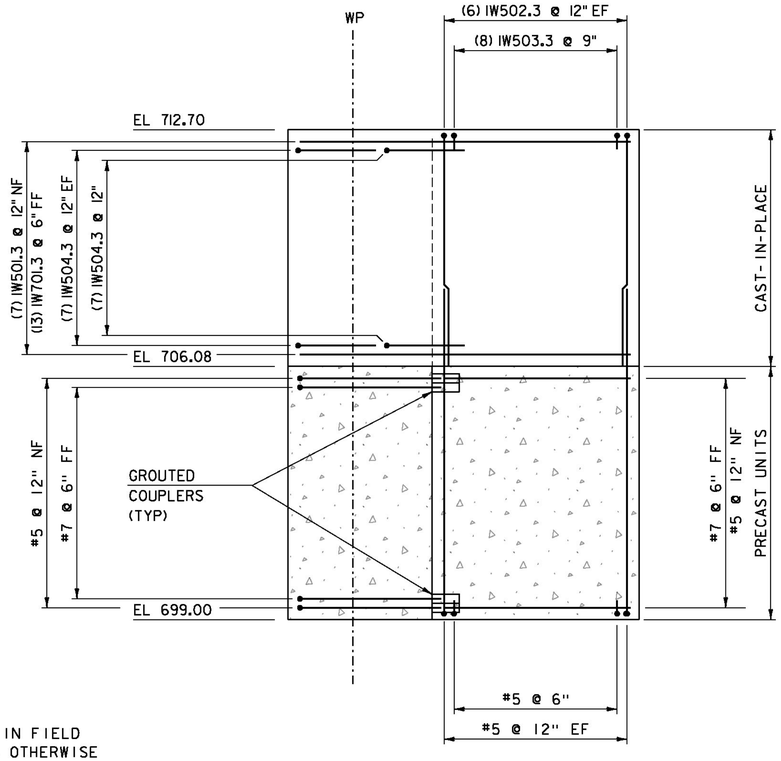

WINGWALL 1 - ELEVATION

SCALE: ½" = 1'-0"

NOTE:

NF = NEAR FACE
FF = FAR FACE
EF = EACH FACE
▲ = CUT TO FIT IN FIELD
3" CLEAR, UNLESS OTHERWISE SPECIFIED ON THE PLANS.
2'-2" BAR LAP UNLESS OTHERWISE SPECIFIED ON THE PLANS.

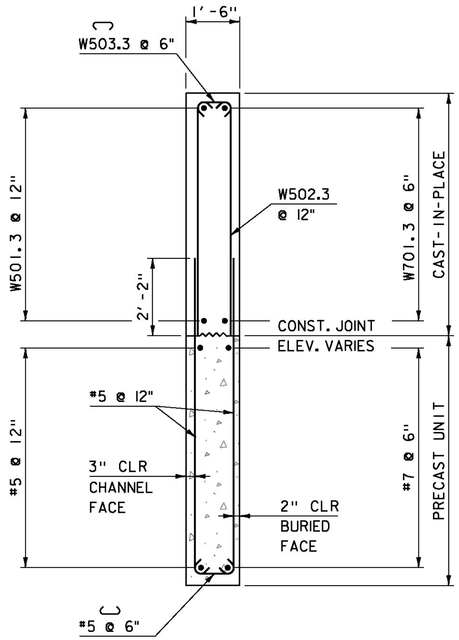

WINGWALL 1-4 - TYPICAL

SCALE: ½" = 1'-0"

PROJECT NAME:	STOWE
PROJECT NUMBER:	BRF 0235 (11)
FILE NAME: s87e052sub.dgn	PLOT DATE: 28-JUL-2014
PROJECT LEADER: C. CARLSON	DRAWN BY: M. LONGSTREET
DESIGNED BY: D. PETERSON	CHECKED BY: C. BURRALL
WINGWALL 1 - 2 ELEVATIONS & TYPICAL	SHEET 42 OF 64

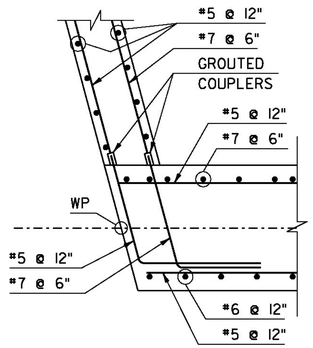

WW3 CORNER DETAIL PCU

SCALE: ½" = 1'-0"
(BELOW SEAT)

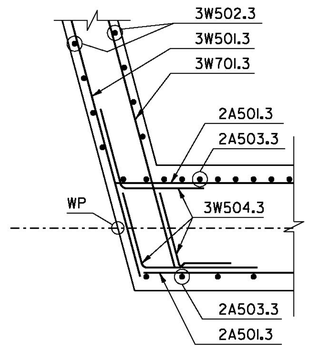

WW3 CORNER DETAIL CIP

SCALE: ½" = 1'-0"
(ABOVE SEAT)

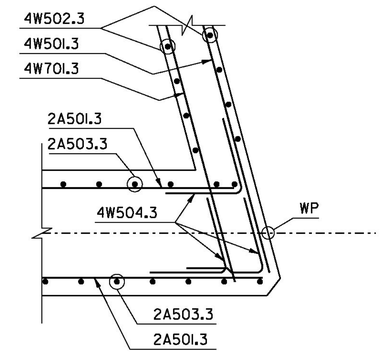

WW4 CORNER DETAIL CIP

SCALE: ½" = 1'-0"
(ABOVE SEAT)

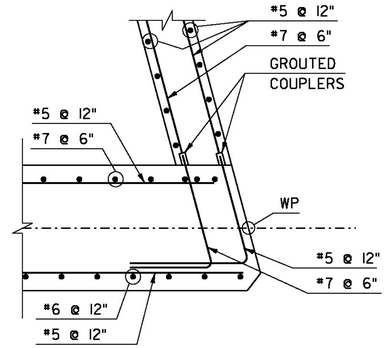

WW4 CORNER DETAIL PCU

SCALE: ½" = 1'-0"
(BELOW SEAT)

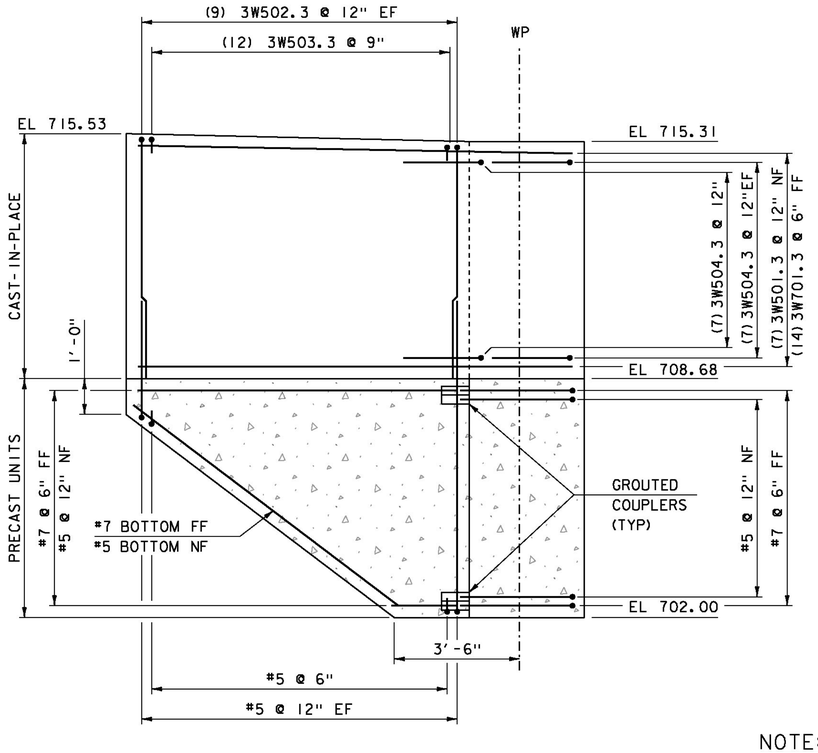

WINGWALL 3 - ELEVATION

SCALE: ½" = 1'-0"

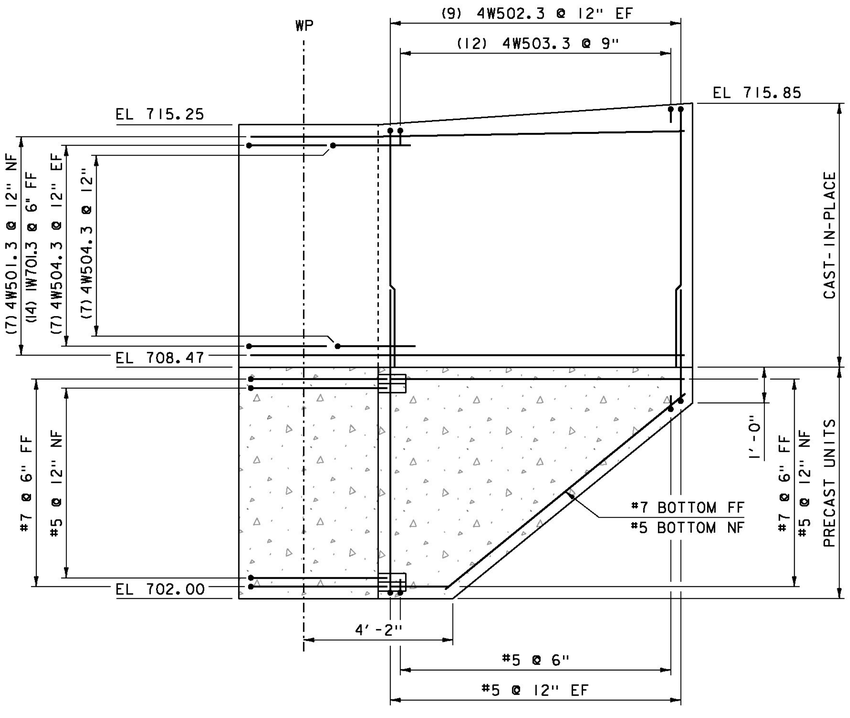

WINGWALL 4 - ELEVATION

SCALE: ½" = 1'-0"

NOTE:

NF = NEAR FACE
FF = FAR FACE
EF = EACH FACE
▲ = CUT TO FIT IN FIELD
3" CLEAR, UNLESS OTHERWISE SPECIFIED ON THE PLANS.
2'-2" BAR LAP UNLESS OTHERWISE SPECIFIED ON THE PLANS.

PROJECT NAME: STOWE	
PROJECT NUMBER: BRF 0235 (11)	
FILE NAME: s87e052sub2.dgn	PLOT DATE: 28-JUL-2014
PROJECT LEADER: C. CARLSON	DRAWN BY: D. KARABEGOVIC
DESIGNED BY: D. PETERSON	CHECKED BY: M. LONGSTREET
WINGWALL 3 - 4 ELEVATIONS	SHEET 43 OF 64

STATE OF VERMONT
AGENCY OF TRANSPORTATION

REINFORCING STEEL SCHEDULE

ITEM	EACH	SIZE	LENGTH	MARK	TYPE	A	B	C	D	E	F	G	H	J	K	R	O
	DECK		**(INCLUDING BARRIER WALL AND WALKWAY SIDEWALK)**														
✳	25	4	34'- 11"	S401.3	STR	34'- 11"											
	336	5	34'- 11"	S501.3	STR	34'- 11"											
	263	5	39'- 0"	S502.3	STR	39'- 0"											
✳	264	6	39'- 0"	S601.3	STR	39'- 0"											
✳	75	9	36'- 0"	S801.3	2	4'- 0"	32'- 0"	---									
	199	4	10'- 5"	S402.3	S5	2'- 2"	2'- 5"	1'- 0"	2'- 8"			2'- 2"					
	199	4	9'- 6"	S403.3	S5	2'- 2"	2'- 3"	0'- 7"	2'- 4"			2'- 2"					
	134	5	10'- 10"	S503.3	S6	2'- 2"	0'- 9"	5'- 0"	0'- 9"			2'- 2"					
	76	5	6'- 5"	S504.3	22		2'- 0"	2'- 5"	2'- 0"				1'- 3"	1'- 3"	1'- 3"	1'- 3"	
	ABUTMENT #1																
	20	5	23'- 4"	1A501.3	STR	23'- 4"											
	6	5	2'- 9"	1A502.3	STR	2'- 9"											
✳	5	5	7'- 10"	1A503.3	STR	7'- 10"											
	12	5	14'- 11"	1A504.3	S10		5'- 11"	3'- 1"	5'- 11"								
	32	5	11'- 9"	1A505.3	S10		4'- 4"	3'- 1"	4'- 4"								
	4	5	5'- 3"	2A506.3	S11								2'- 1"				2'- 2"
	31	8	3'- 5"	1A801.3	19		1'- 5"	2'- 0"	---				1'- 0"		1'- 0"		3'- 0"
	WINGWALL #1																
	7	5	9'- 4"	1W501.3	STR	9'- 4"											
✳	14	7	9'- 4"	1W701.3	STR	9'- 4"											
	12	5	6'- 11"	1W502.3	1	0'- 7"	6'- 4"							0'- 5"			
	14	5	2'- 1"	1W503.3	S3	0'- 6"	---	1'- 1"				0'- 6"	0'- 4"				
	21	5	4'- 4"	1W504.3	27		2'- 2"	2'- 2"					2'- 1"		0'- 7"		
	WINGWALL #2																
	7	5	12'- 4"	2W501.3	STR	12'- 4"											
	14	7	12'- 4"	2W701.3	STR	12'- 4"											
	18	5	7'- 1"	2W502.3	1	0'- 7"	6'- 6"					---		0'- 5"			
	12	5	2'- 0"	2W503.3	S3	0'- 6"	---	1'- 1"	---			0'- 6"	0'- 4"				
	21	5	4'- 6"	2W504.3	22		2'- 3"	2'- 3"	---				2'- 1"	---	0'- 7"	---	
	ABUTMENT #2																
	20	5	22'- 6"	2A501.3	STR	22'- 6"											
	4	5	8'- 11"	2A502.3	STR	8'- 11"											
	3	5	14'- 9"	2A504.3	S10		5'- 10"	3'- 1"	5'- 10"								
	31	5	11'- 9"	2A505.3	S10		4'- 4"	3'- 1"	4'- 4"								
	4	5	5'- 3"	2A506.3	S11								2'- 1"				2'- 2"
	31	8	3'- 5"	2A801.3	19		1'- 5"	2'- 0"	---				1'- 0"		1'- 0"		3'- 0"
	WINGWALL #3																
	7	5	12'- 4"	3W501.3	STR	12'- 4"											
	14	7	12'- 4"	3W701.3	STR	12'- 4"											
	18	5	6'- 11"	3W502.3	1	0'- 7"	6'- 4"					---		0'- 5"			
	12	5	2'- 0"	3W503.3	S3	0'- 6"	---	1'- 1"	---			0'- 6"	0'- 4"				
	21	5	4'- 4"	3W504.3	22		2'- 2"	2'- 2"	---				2'- 1"	---	0'- 7"	---	
	WINGWALL #4																
	7	5	12'- 4"	4W501.3	STR	12'- 4"											
	14	7	12'- 4"	4W701.3	STR	12'- 4"											
	18	5	7'- 1"	4W502.3	1	0'- 7"	6'- 6"					---		0'- 5"			
	12	5	2'- 0"	4W503.3	S3	0'- 6"	---	1'- 1"	---			0'- 6"	0'- 4"				
	21	5	4'- 5"	4W504.3	27		2'- 3"	2'- 2"					2'- 1"		0'- 7"		

ITEM	EACH	SIZE	LENGTH	MARK	TYPE	A	B	C	D	E	F	G	H	J	K	R	O

~ NOTES ~

1. UNLESS OTHERWISE DESIGNATED, ALL BAR REINFORCEMENT FOR CONCRETE IN SIZES UP TO AND INCLUDING NO. 18 SHALL CONFORM TO THE REQUIREMENTS OF THE "SPECIFICATIONS FOR DEFORMED BILLET-STEEL BARS FOR CONCRETE REINFORCEMENT", AASHTO M 31 (ASTM A 615-SI). ALL BARS SHALL BE GRADE 60, UNLESS OTHERWISE DESIGNATED.
2. FOR TYPICAL BENDING DETAILS, RECOMMENDED PIN DIAMETER "D" OF BENDS AND HOOKS, AND OTHER STANDARD PRACTICE, SEE CURRENT CONCRETE REINFORCING STEEL INSTITUTE "MANUAL OF STANDARD PRACTICE".
3. BARS WHICH REQUIRE MORE ACCURATE BENDING THAN STANDARD PRACTICES SHOULD HAVE LIMITS INDICATED.
4. ALL DIMENSIONS ARE OUT TO OUT OF BAR EXCEPT "A" AND "G" ON STANDARD 180 DEGREE AND 135 DEGREE HOOKS.
5. "J" DIMENSION ON 180 DEGREE HOOKS TO BE SHOWN ONLY WHERE NECESSARY TO RESTRICT HOOK SIZE. OTHERWISE, STANDARD HOOKS ARE TO BE USED.
6. "H" DIMENSION ON STIRRUPS TO BE SHOWN ONLY WHEN NECESSARY TO MAINTAIN CLEARANCES.
7. WHERE SLOPE DIFFERS FROM 45 DEGREES, DIMENSIONS "H" AND "K" MUST BE SHOWN.
8. ▲ DENOTES BARS TO BE CUT IN FIELD.
9. ✳ DENOTES ONE EXTRA BAR ADDED FOR TESTING PURPOSES.
10. △ DENOTES TWO EXTRA BARS ADDED FOR TESTING PURPOSES.
11. E IN BAR MARK PREFIX DENOTES EPOXY COATED REINFORCING STEEL.

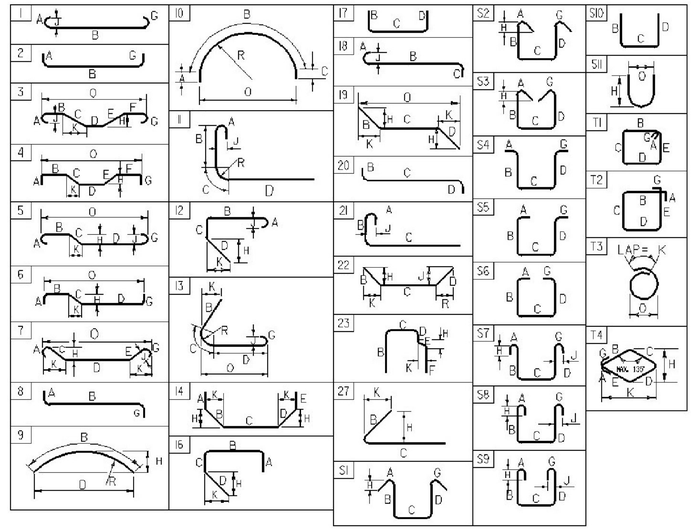

ASTM STANDARD REINFORCING BARS

BAR DESIGNATION NO.	NOMINAL WEIGHT POUNDS PER FOOT	NOMINAL DIMENSIONS		
		DIAMETER INCHES	AREA SQUARE INCHES	PERIMETER INCHES
#3	0.376	0.375	0.11	1.178
#4	0.668	0.500	0.20	1.571
#5	1.043	0.625	0.31	1.963
#6	1.502	0.750	0.44	2.356
#7	2.04	0.875	0.60	2.749
#8	2.670	1.000	0.79	3.14
#9	3.400	1.13	1.00	3.54
#10	4.3	1.270	1.27	3.990
#11	5.31	1.410	1.56	4.430
#14	7.65	1.69	2.25	5.32
#18	13.60	2.26	4.00	7.09

~ REINFORCING STEEL CORROSION RESISTANCE LEVEL ~

THE REINFORCING STEEL MARKS IN THIS SCHEDULE INDICATE THE REQUIRED BAR CORROSION RESISTANCE LEVEL. CORROSION RESISTANCE LEVEL IS DENOTED WITH A ,2 FOR LEVEL TWO SUFFIX OR ,3 FOR LEVEL THREE SUFFIX ,1 FOR LEVEL ONE IS TO BE OMITTED. THE BAR MATERIAL TYPE AND BAR STEEL GRADE PROIVEDED FOR EACH CORRIOSION LEVEL WILL BE RECORDED ON THE PLAN SET PI SHEET FOR AS-BUILT RECORD PLAN ARCHIVES.

PROJECT NAME: **STOWE**
PROJECT NUMBER: **BRF 0235 (11)**

FILE NAME: **s87e052rss.xls**
PROJECT MANAGER: **C. CARLSON**
DESIGNED BY: **D. PETERSON**
REINFORCING STEEL SCHEDULE

PLOT DATE: **7/15/2014**
DRAWN BY: **M. LONGSTREET**
CHECKED BY: **J. LACROIX**
SHEET **44** OF **64**

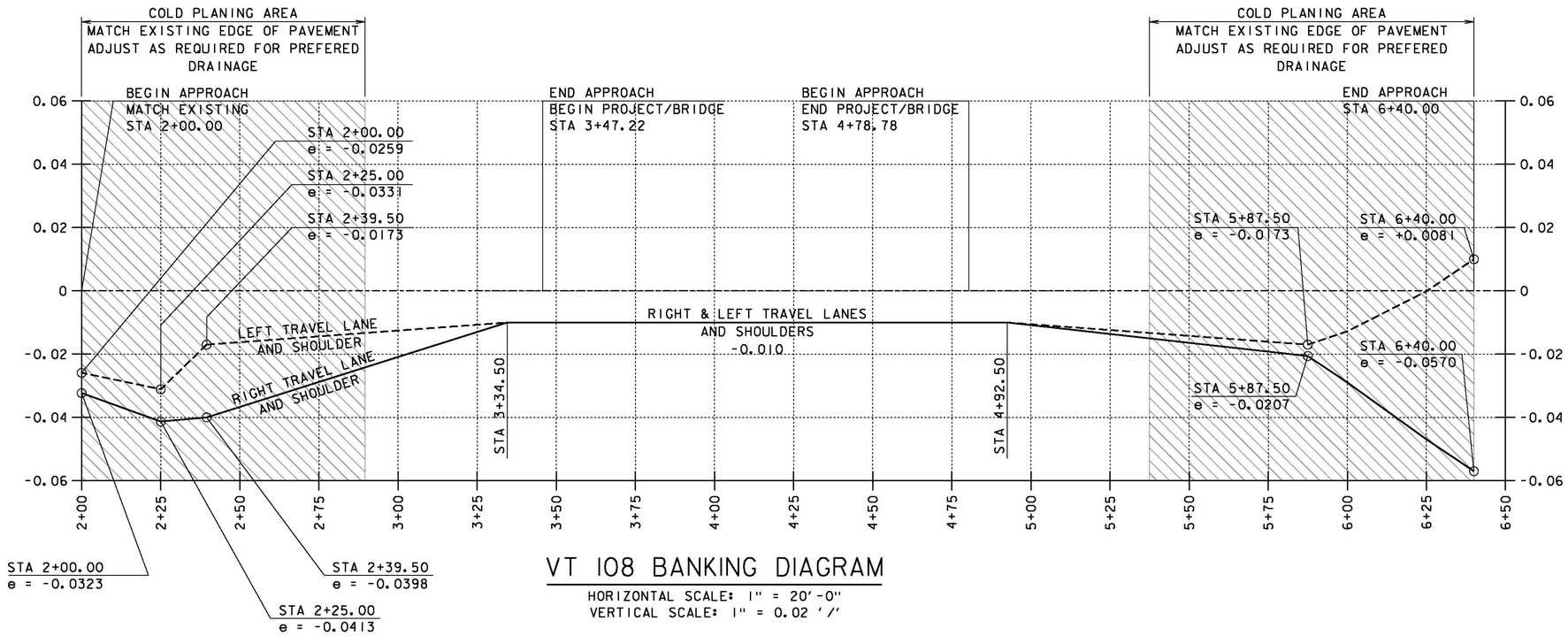

VT 108 BANKING DIAGRAM

HORIZONTAL SCALE: 1" = 20'-0"
VERTICAL SCALE: 1" = 0.02 '/'

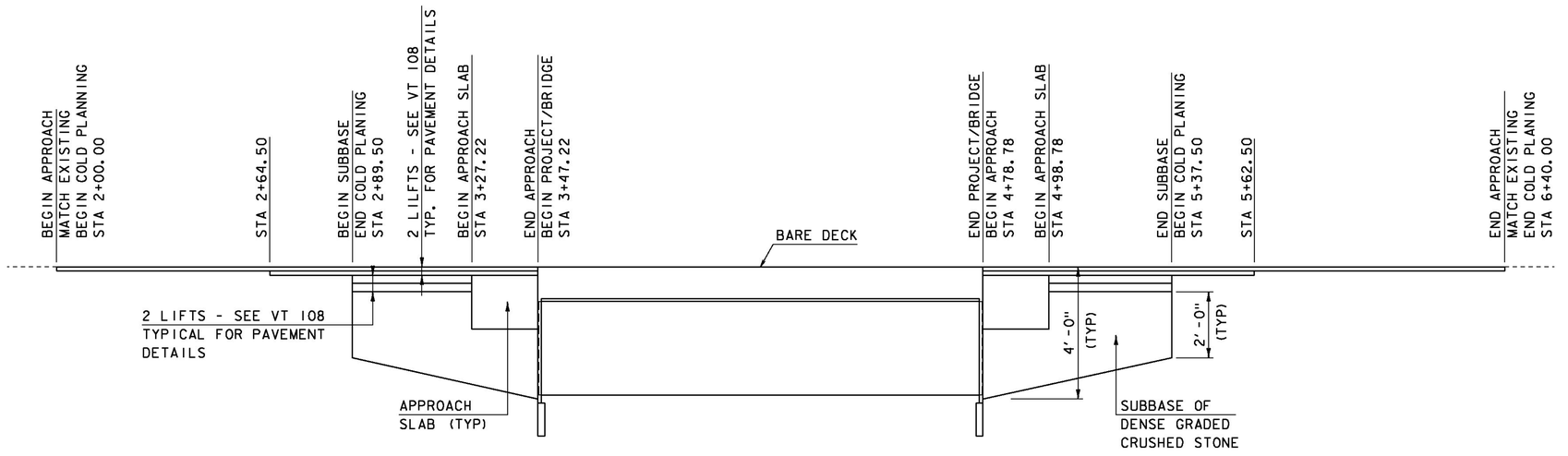

VT 108 MATERIAL TRANSITION DETAIL

HORIZONTAL SCALE: 1" = 20'-0"
NO VERTICAL SCALE

PROJECT NAME: STOWE	
PROJECT NUMBER: BRF 0235 (11)	
FILE NAME: s87e052pro.dgn	PLOT DATE: 28-JUL-2014
PROJECT LEADER: C. CARLSON	DRAWN BY: G. ROY
DESIGNED BY: D. PETERSON	CHECKED BY: M. LONGSTREET
BANKING DIAGRAM & MATERIAL TRANSITION	SHEET 45 OF 64

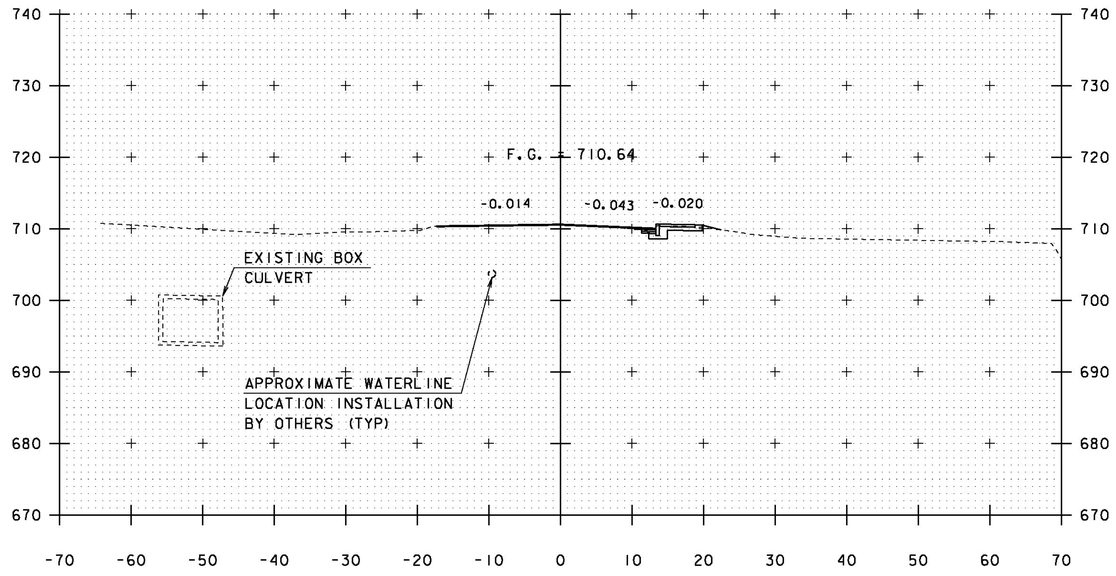

2+50

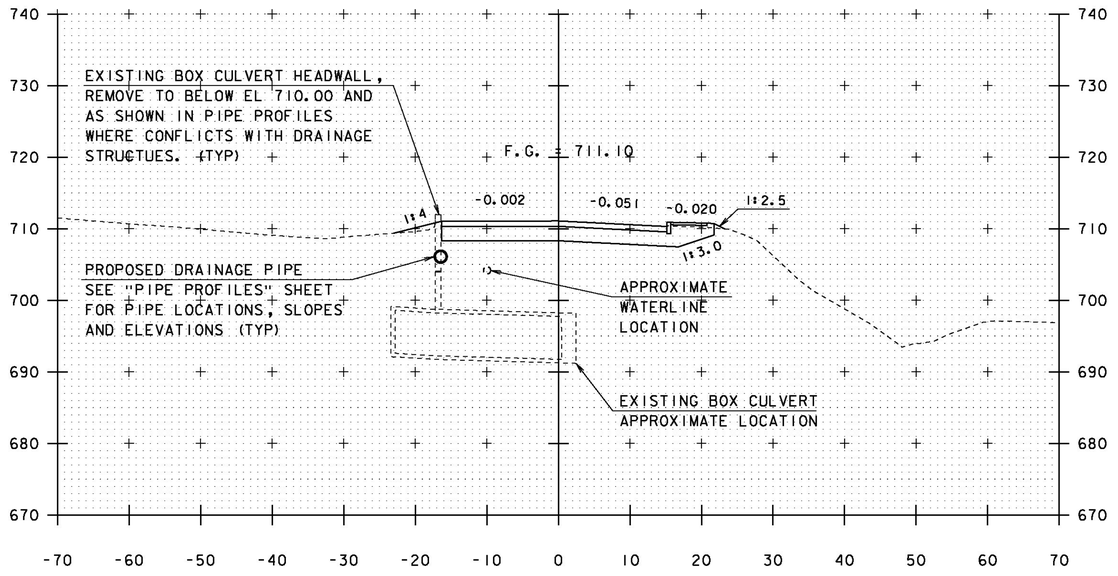

2+90

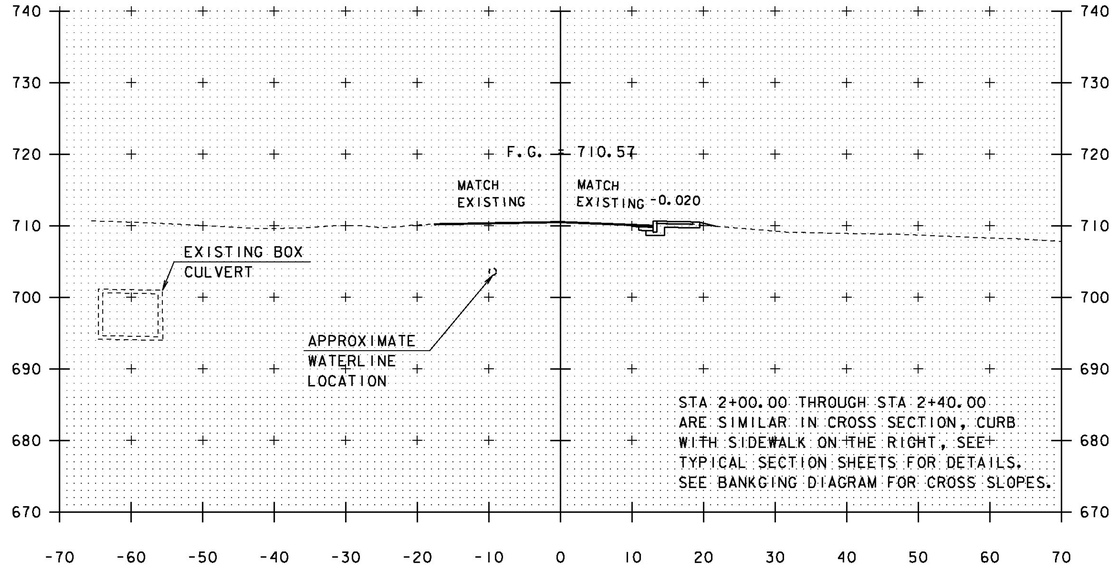

2+40
BEGIN APPROACH
STA 2+00.00
(MATCH EXISTING)

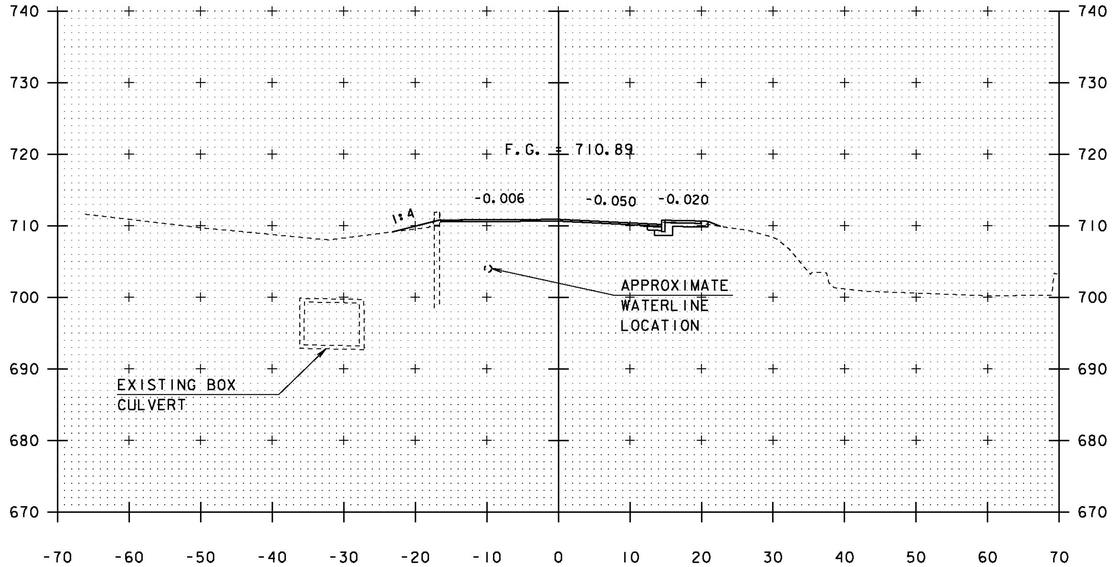

2+75

STA. 2+40 TO STA. 2+90

PROJECT NAME: STOWE	
PROJECT NUMBER: BRF 0235 (11)	
FILE NAME: s87e052xsl.dgn	PLOT DATE: 28-JUL-2014
PROJECT LEADER: C. CARLSON	DRAWN BY: M. LONGSTREET
DESIGNED BY: D. PETERSON	CHECKED BY: J. LACROIX
VT 108 CROSS SECTIONS SHEET 1	SHEET 46 OF 64

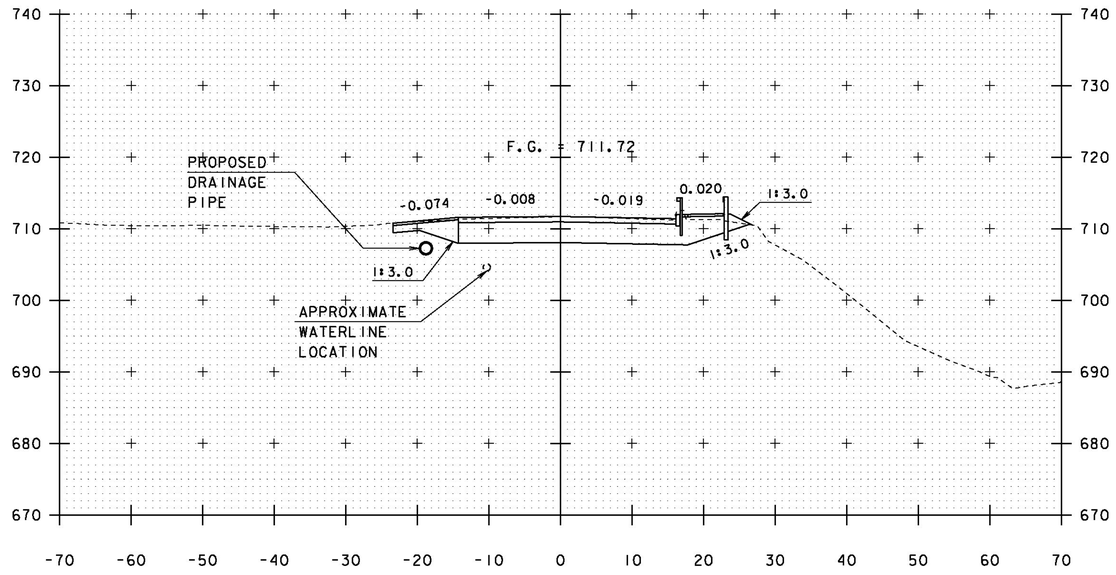

3+25

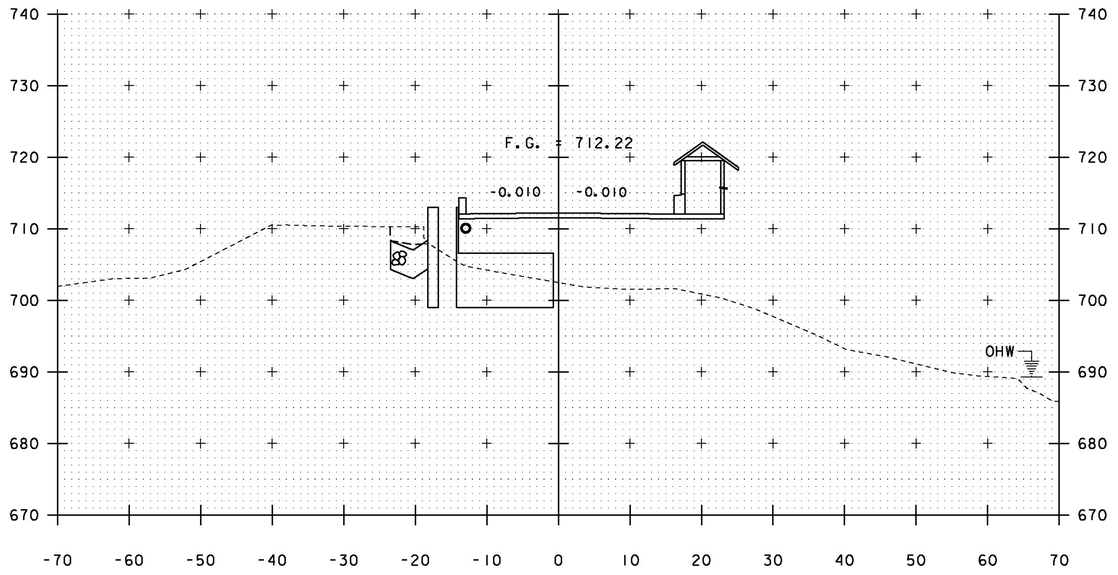

3+50

BEGIN PROJECT/BRIDGE
STA 3+47.22

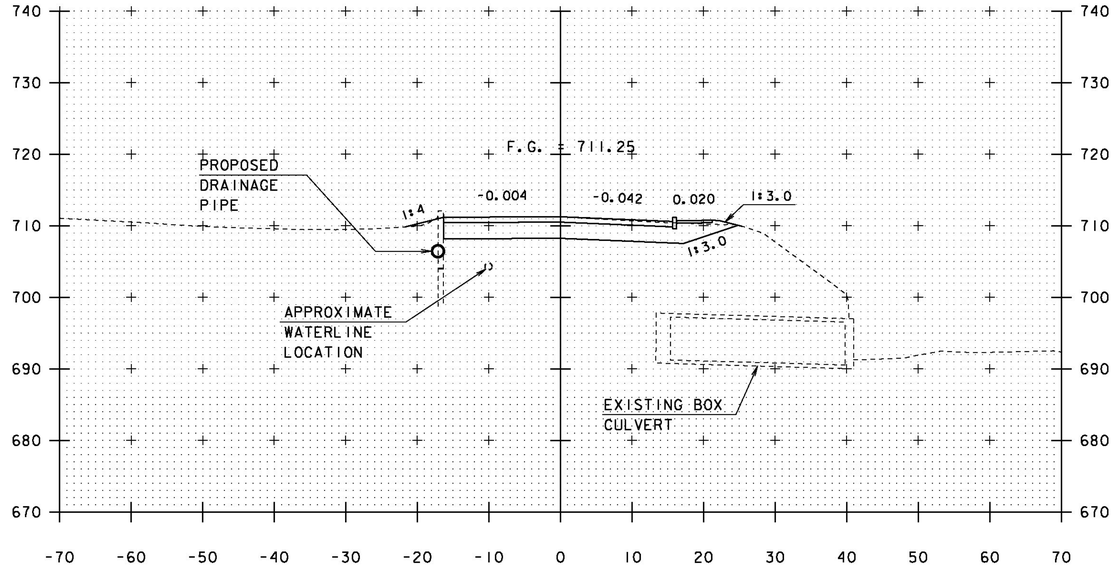

3+00

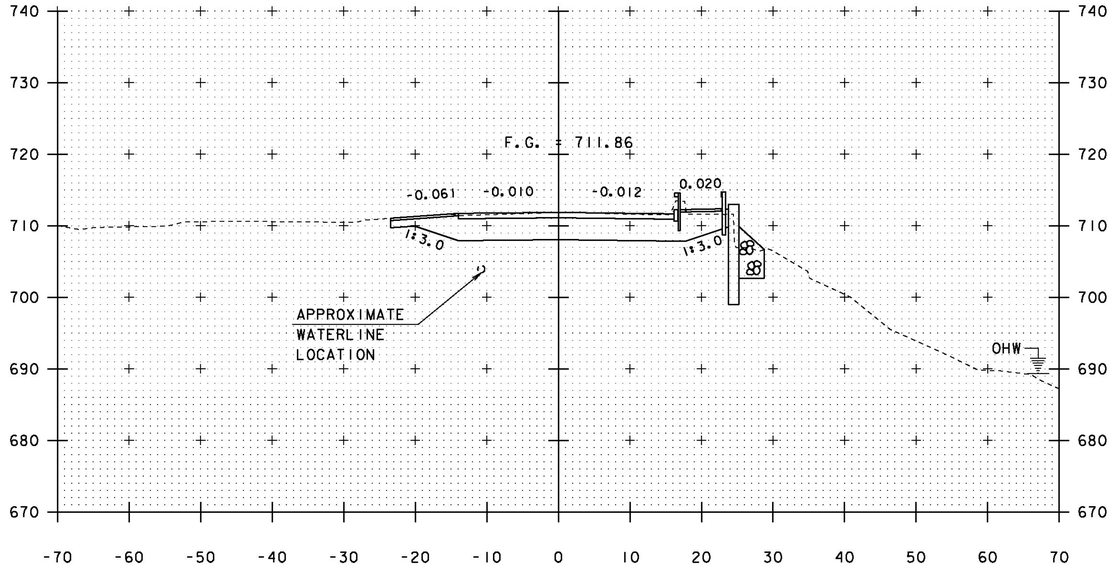

3+32

STA. 3+00 TO STA. 3+50

PROJECT NAME: STOWE	
PROJECT NUMBER: BRF 0235 (11)	
FILE NAME: s87e052xsl.dgn	PLOT DATE: 28-JUL-2014
PROJECT LEADER: C. CARLSON	DRAWN BY: M. LONGSTREET
DESIGNED BY: D. PETERSON	CHECKED BY: J. LACROIX
VT 108 CROSS SECTIONS SHEET 2	SHEET 47 OF 64

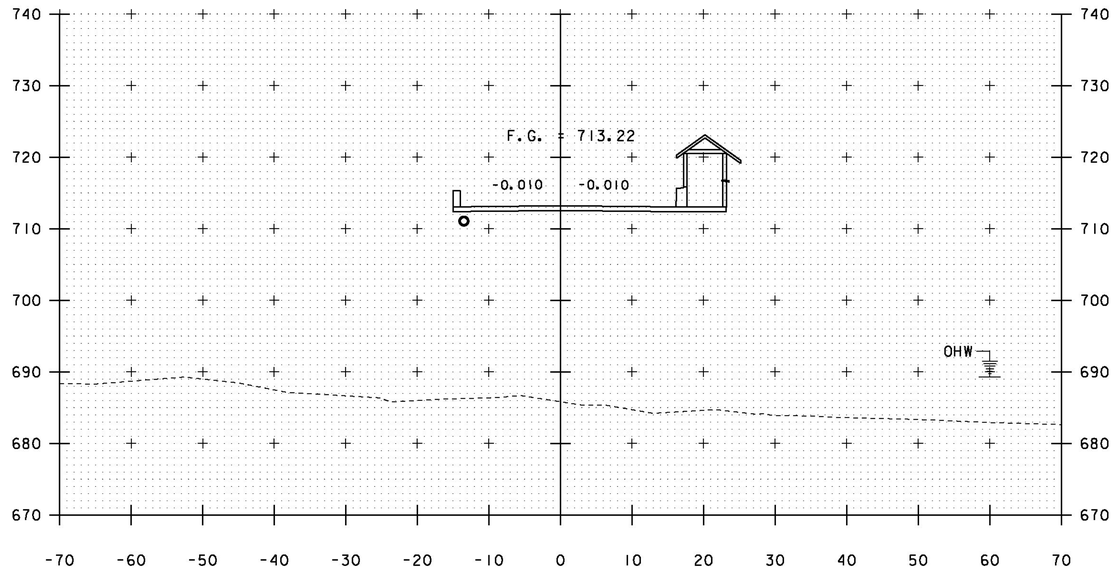

4+00

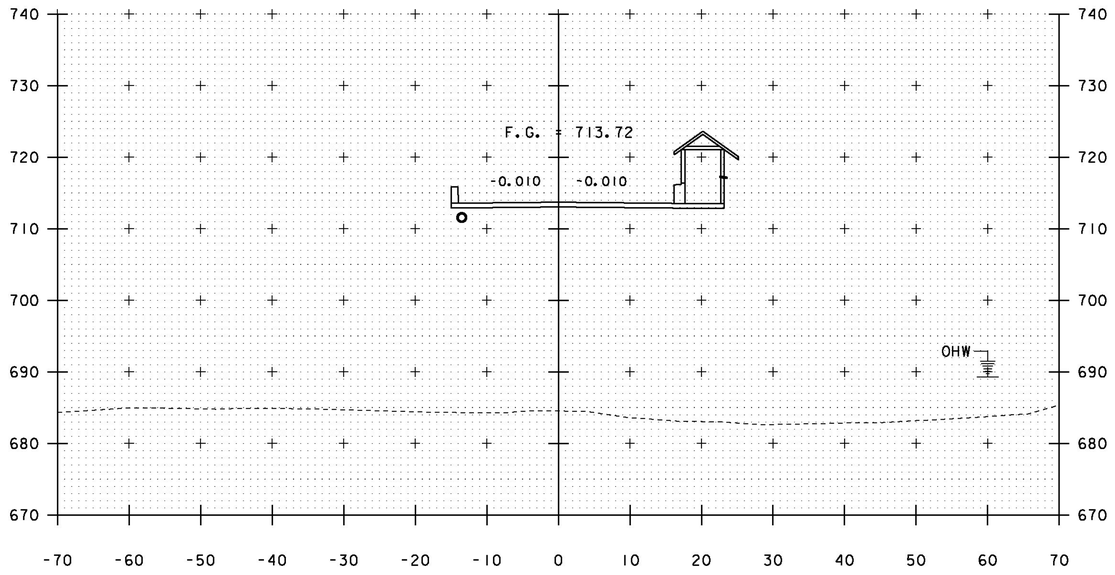

4+25

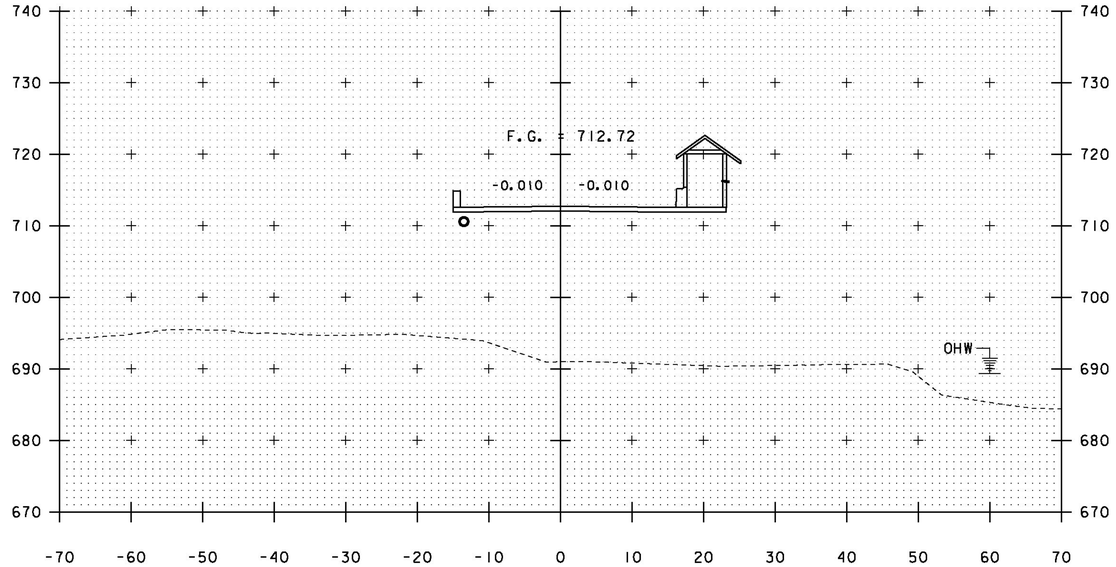

3+75

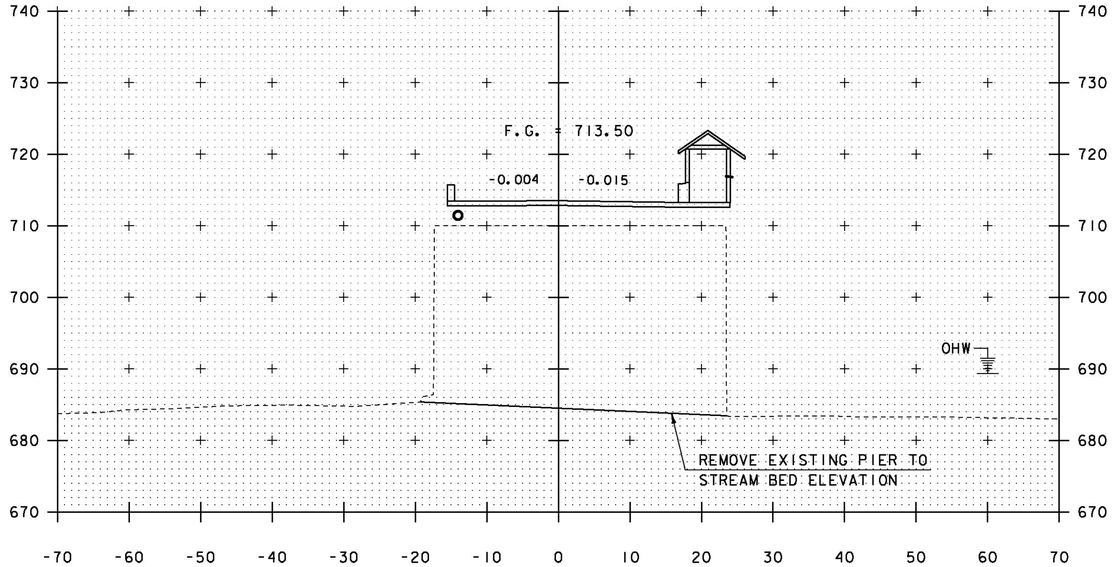

4+14 (CUT ON 15° SKEW)

STA. 3+75 TO STA. 4+25

PROJECT NAME: STOWE
PROJECT NUMBER: BRF 0235 (11)

FILE NAME: s87e052xsl.dgn
PROJECT LEADER: C. CARLSON
DESIGNED BY: D. PETERSON
VT 108 CROSS SECTIONS SHEET 3

PLOT DATE: 28-JUL-2014
DRAWN BY: M. LONGSTREET
CHECKED BY: J. LACROIX
SHEET 48 OF 64

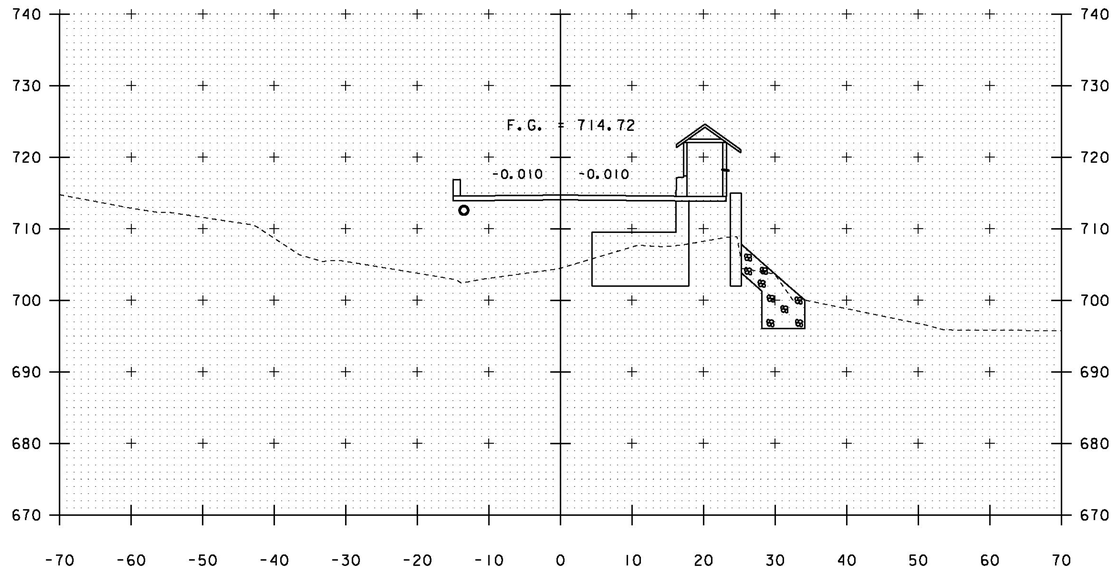

4+75

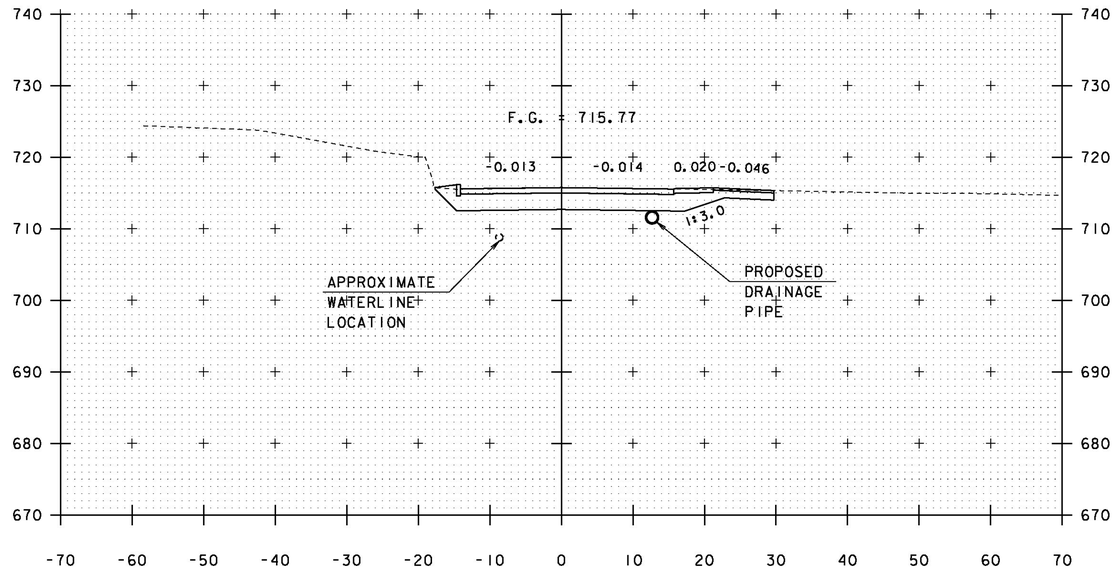

5+25

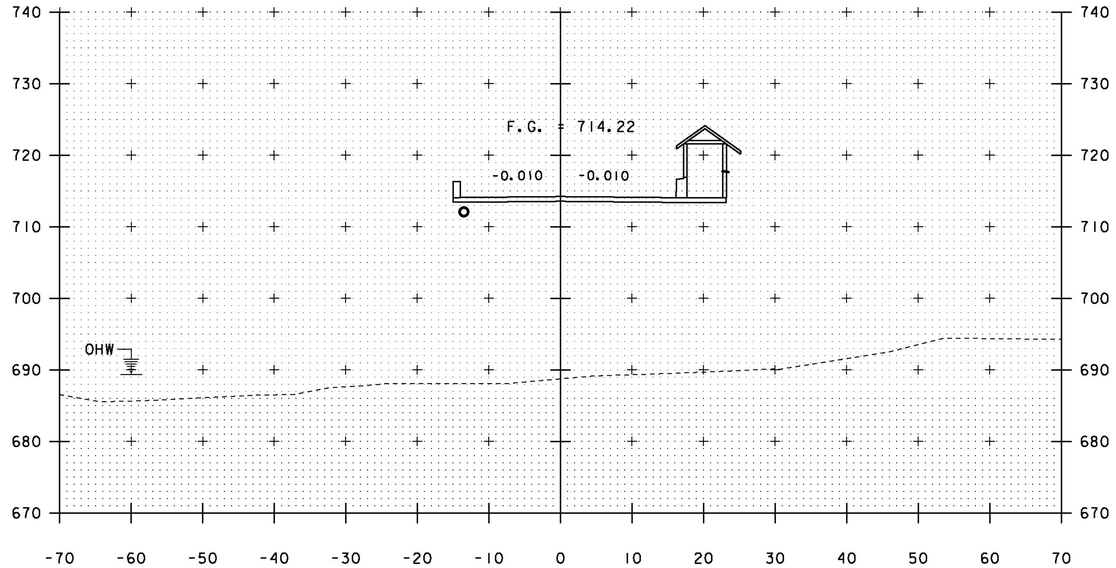

4+50

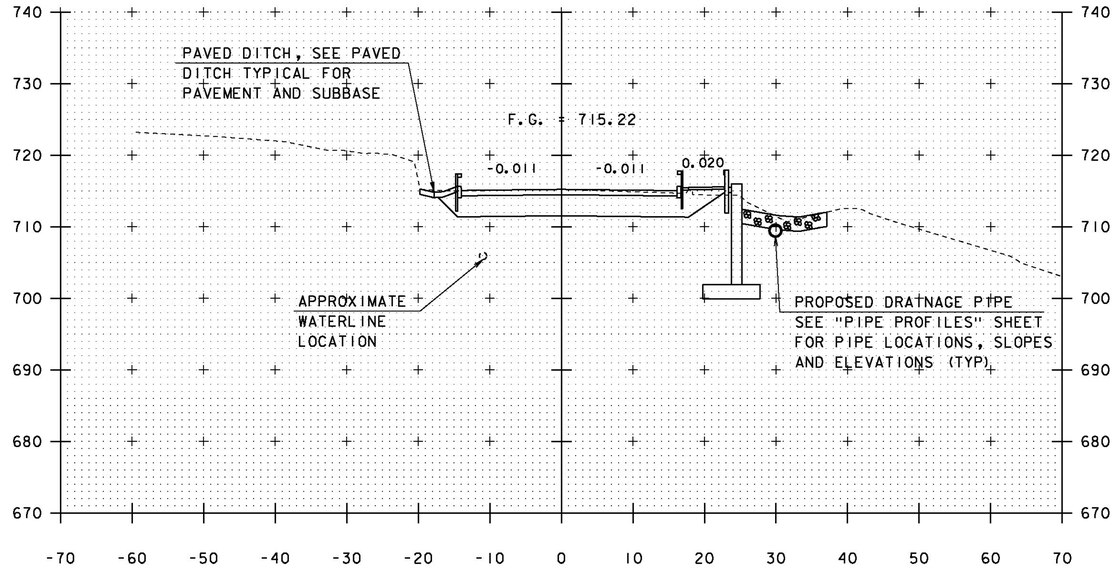

END BRIDGE/PROJECT 5+00
STA 4+78.78

STA. 4+50 TO STA. 5+25

PROJECT NAME: STOWE
PROJECT NUMBER: BRF 0235 (11)

FILE NAME: s87e052xsl.dgn
PROJECT LEADER: C. CARLSON
DESIGNED BY: D. PETERSON
VT 108 CROSS SECTIONS SHEET 4

PLOT DATE: 28-JUL-2014
DRAWN BY: M. LONGSTREET
CHECKED BY: J. LACROIX
SHEET 49 OF 64

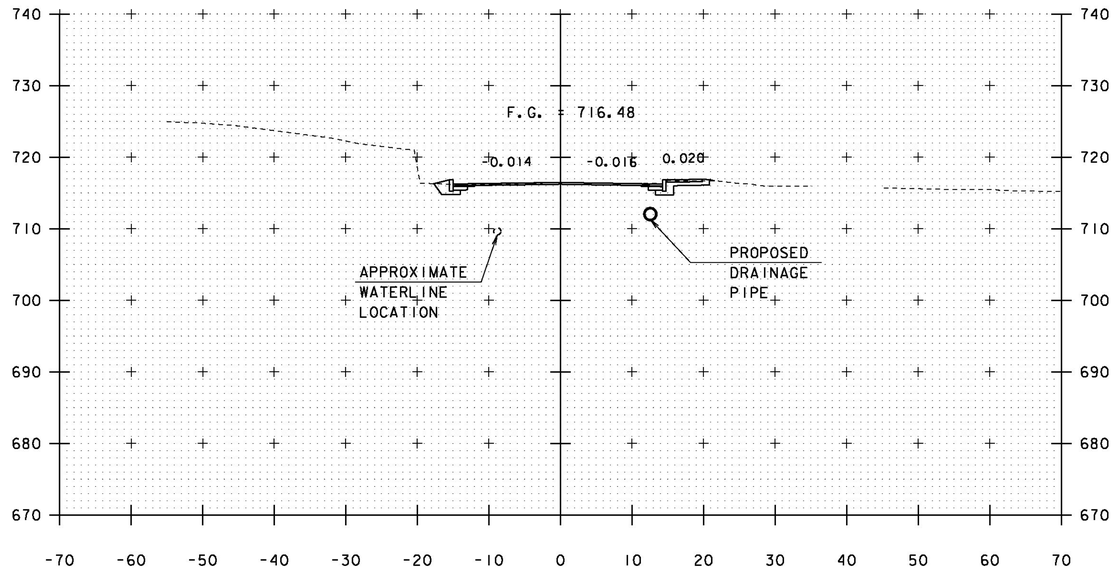

5+50

END APPROACH STA 6+40.00

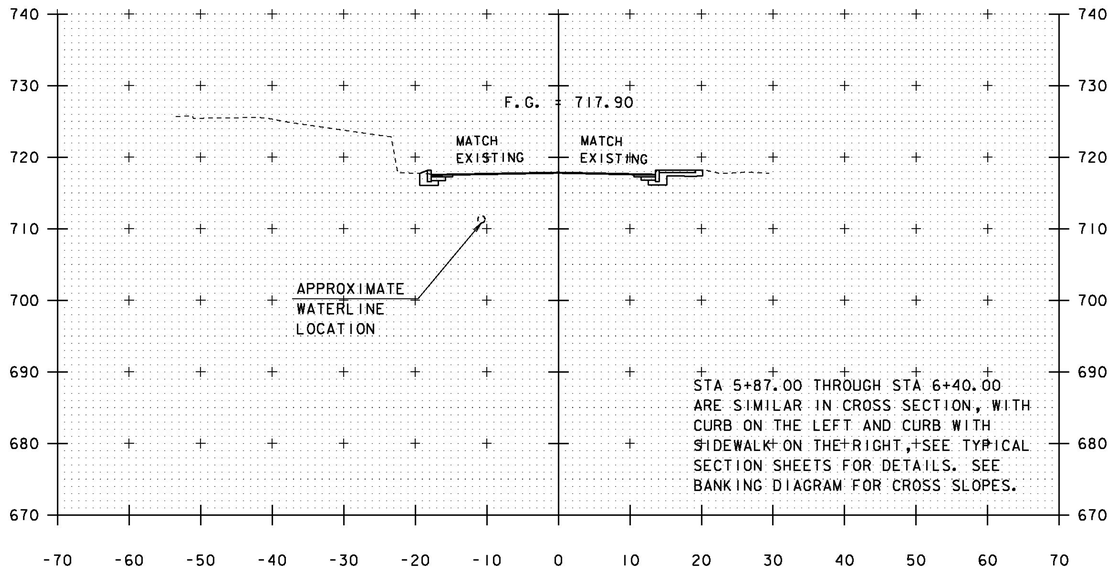

STA 5+87.00 THROUGH STA 6+40.00 ARE SIMILAR IN CROSS SECTION, WITH CURB ON THE LEFT AND CURB WITH SIDEWALK ON THE RIGHT, SEE TYPICAL SECTION SHEETS FOR DETAILS. SEE BANKING DIAGRAM FOR CROSS SLOPES.

5+87

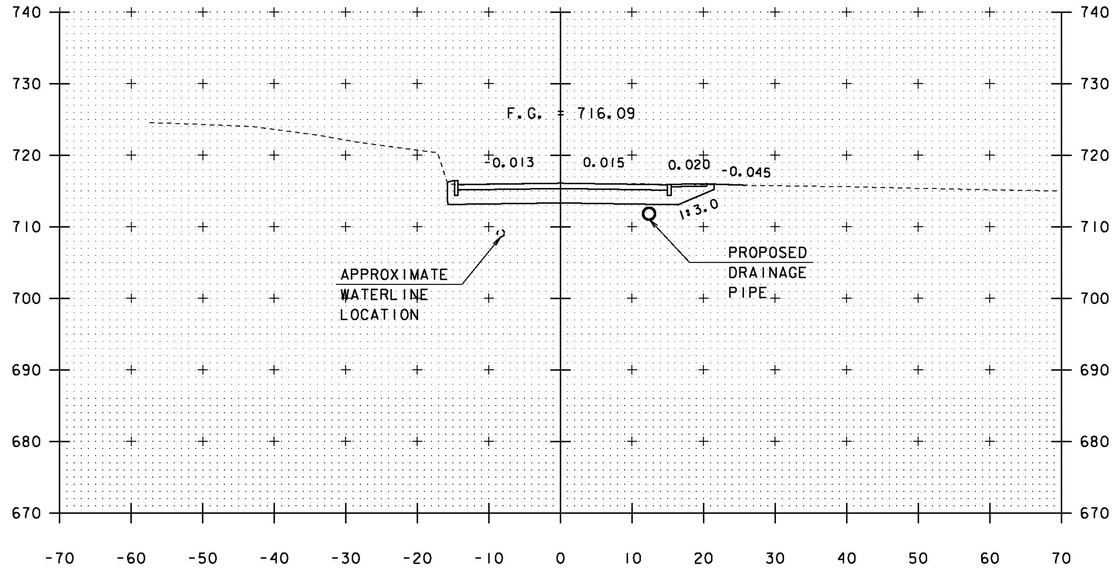

5+37

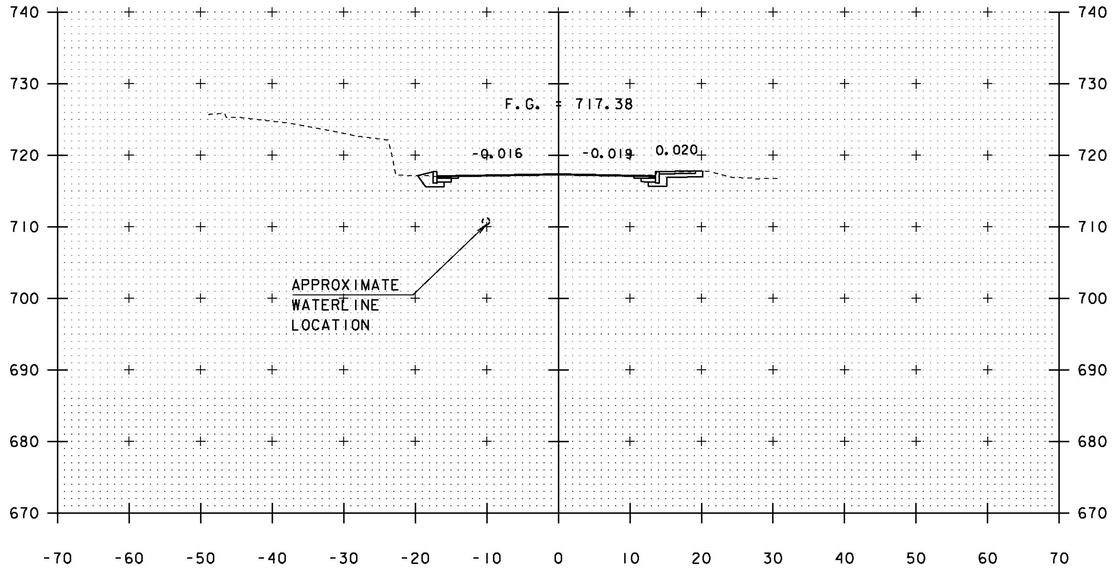

5+75

STA. 5+37 TO STA. 5+87

PROJECT NAME:	STOWE
PROJECT NUMBER:	BRF 0235 (11)
FILE NAME: s87e052xsl.dgn	PLOT DATE: 28-JUL-2014
PROJECT LEADER: C. CARLSON	DRAWN BY: M. LONGSTREET
DESIGNED BY: D. PETERSON	CHECKED BY: J. LACROIX
VT 108 CROSS SECTIONS SHEET 5	SHEET 50 OF 64

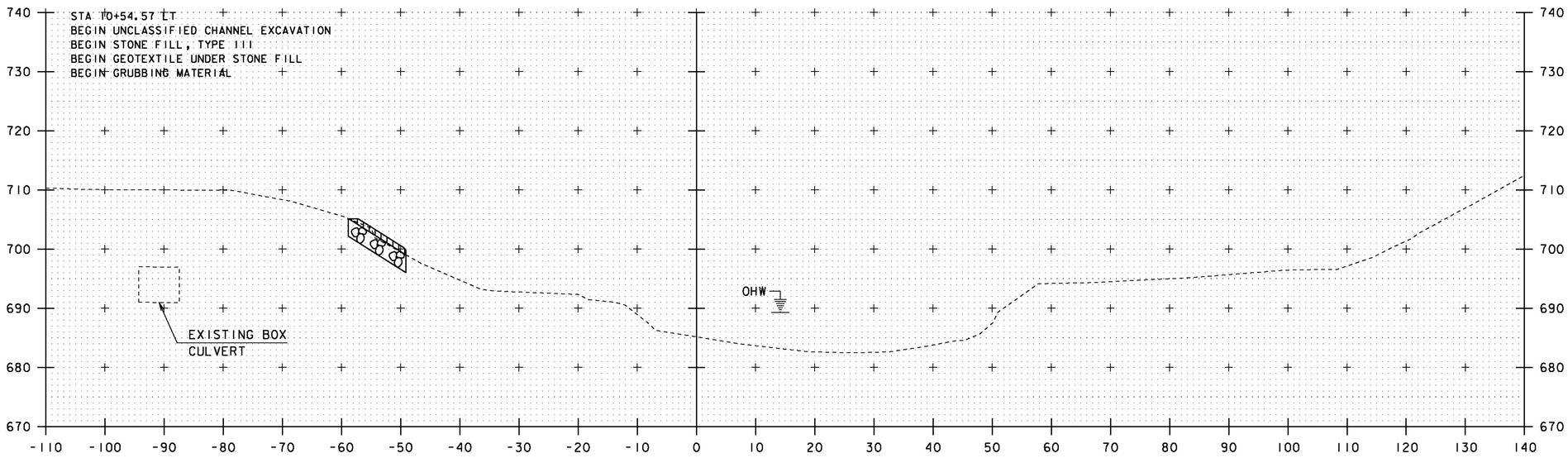

10+50

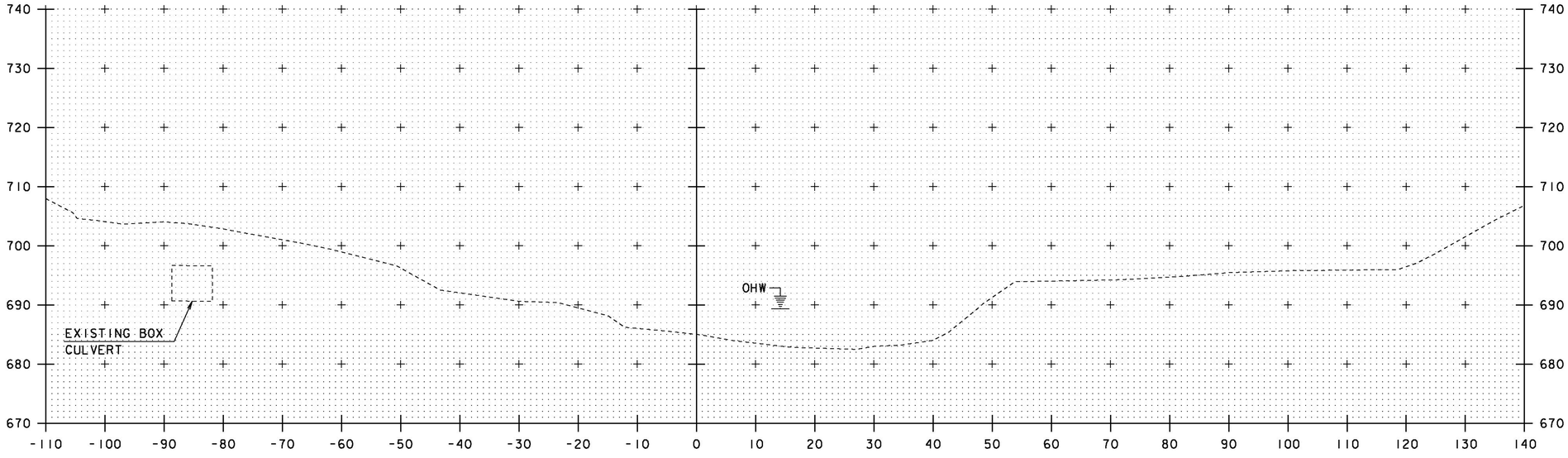

10+40

STA. 10+40 TO STA. 10+50

PROJECT NAME: STOWE
PROJECT NUMBER: BRF 0235 (11)

FILE NAME: s87e052xsl.dgn
PROJECT LEADER: C. CARLSON
DESIGNED BY: D. PETERSON
CHANNEL CROSS SECTIONS SHEET 1

PLOT DATE: 28-JUL-2014
DRAWN BY: M. LONGSTREET
CHECKED BY: J. LACROIX
SHEET 51 OF 64

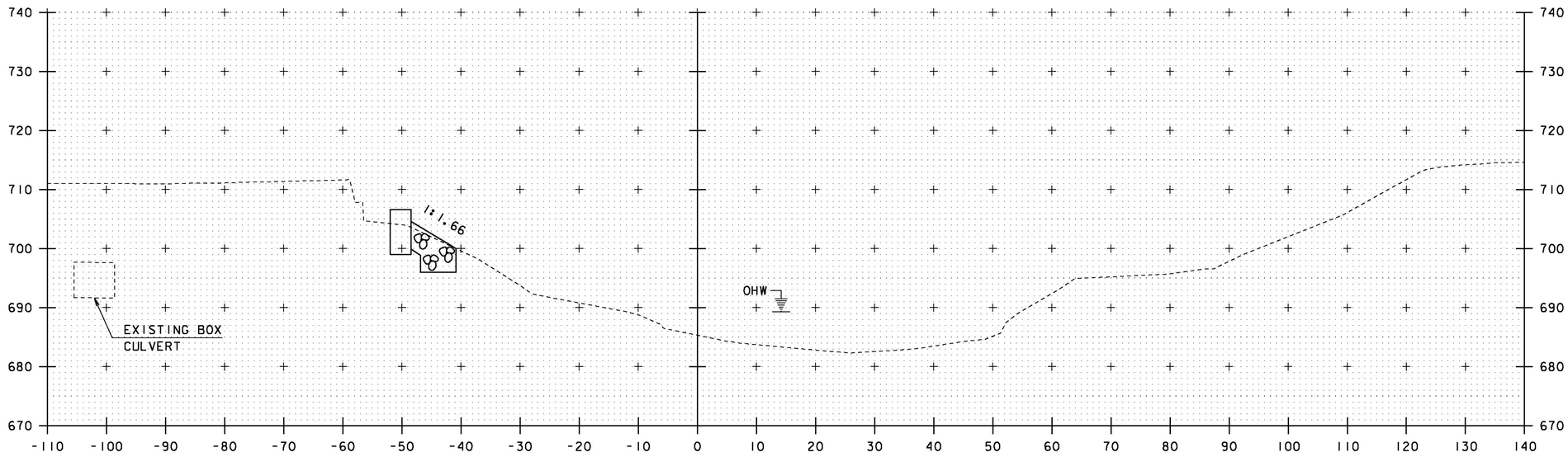

10+70

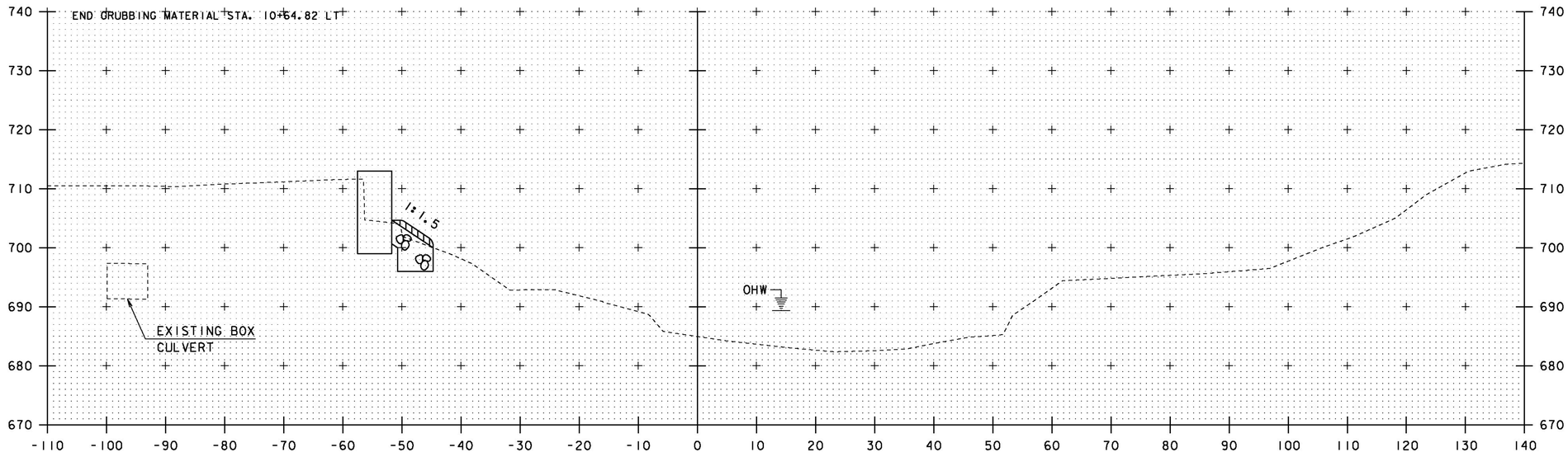

10+60

STA. 10+60 TO STA. 10+70

PROJECT NAME:	STOWE
PROJECT NUMBER:	BRF 0235 (11)
FILE NAME: s87e052xsl.dgn	PLOT DATE: 28-JUL-2014
PROJECT LEADER: C. CARLSON	DRAWN BY: M. LONGSTREET
DESIGNED BY: D. PETERSON	CHECKED BY: J. LACROIX
CHANNEL CROSS SECTIONS SHEET 2	SHEET 52 OF 64

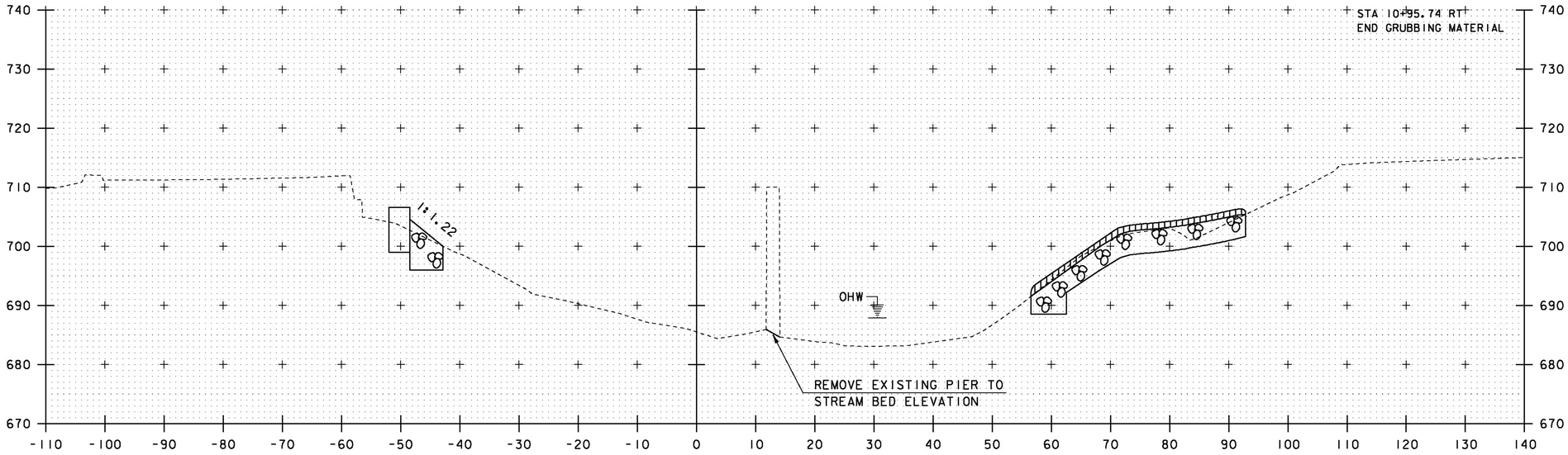

10+90

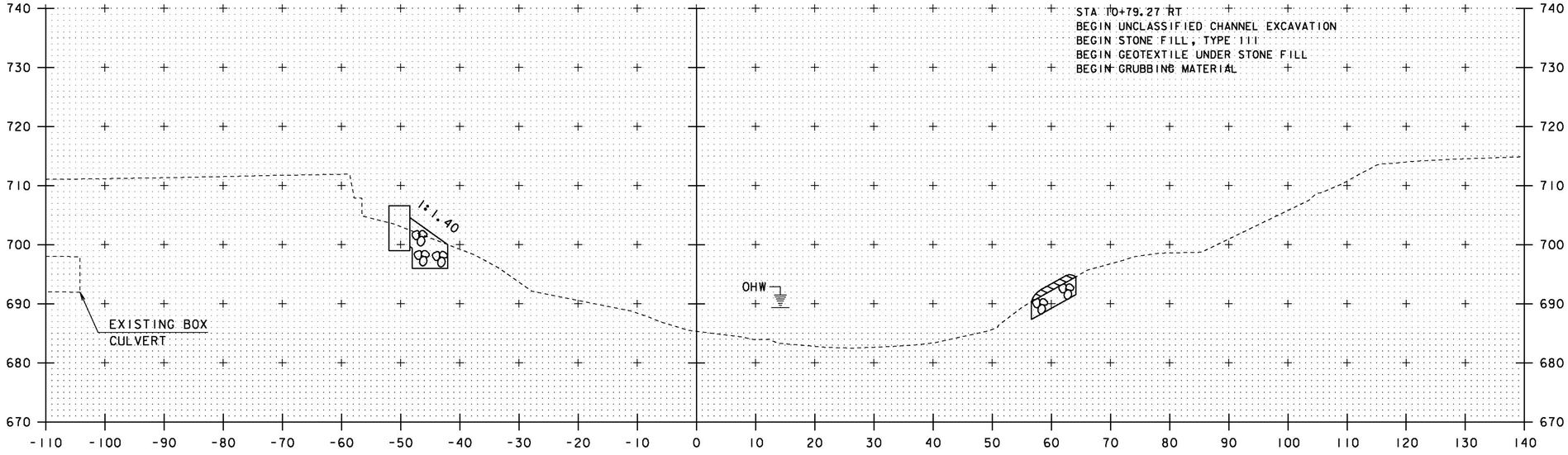

10+80

STA. 10+80 TO STA. 10+90

PROJECT NAME: STOWE
PROJECT NUMBER: BRF 0235 (11)

FILE NAME: s87e052xsl.dgn
PROJECT LEADER: C. CARLSON
DESIGNED BY: D. PETERSON
CHANNEL CROSS SECTIONS SHEET 3

PLOT DATE: 28-JUL-2014
DRAWN BY: M. LONGSTREET
CHECKED BY: J. LACROIX
SHEET 53 OF 64

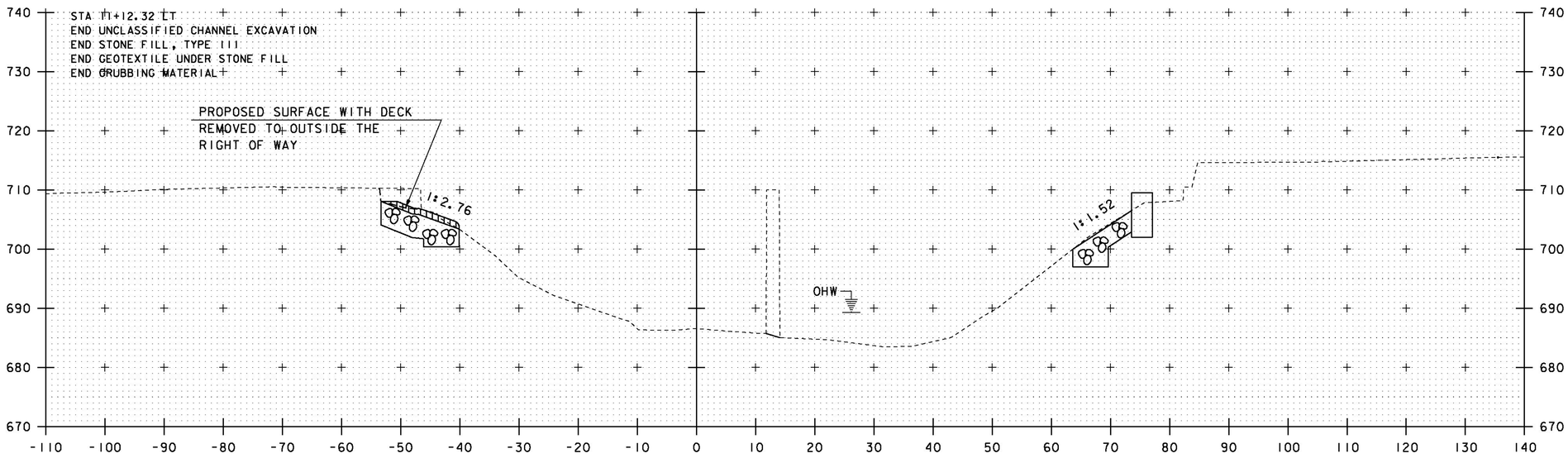

11+10

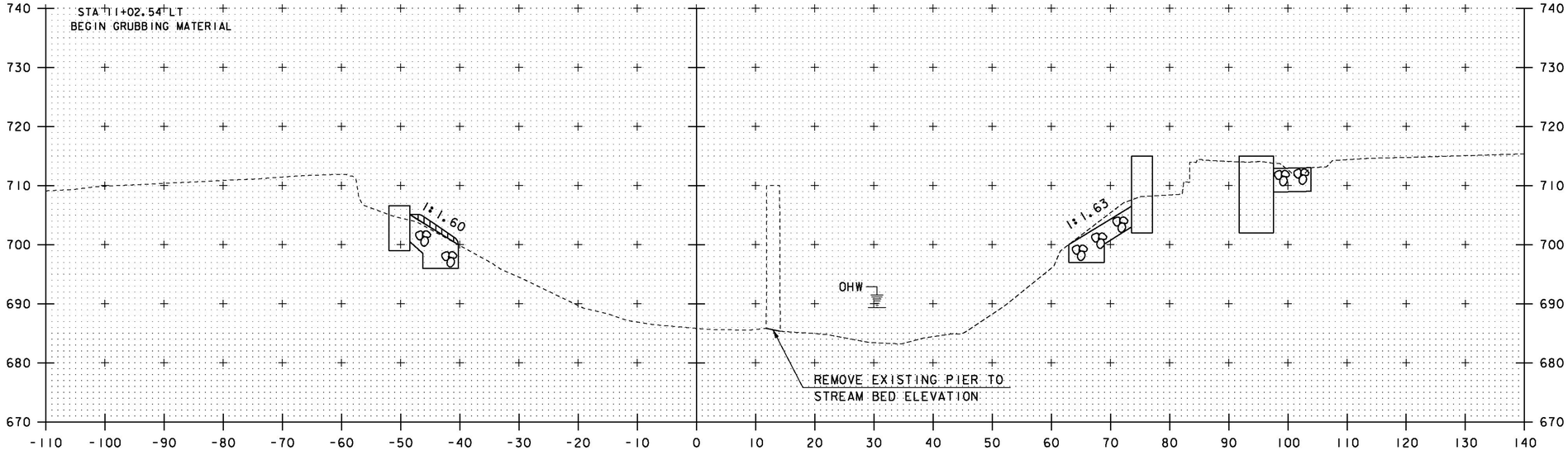

11+00

STA. 11+00 TO STA. 11+10

PROJECT NAME: STOWE
PROJECT NUMBER: BRF 0235 (11)

FILE NAME: s87e052xsl.dgn
PROJECT LEADER: C. CARLSON
DESIGNED BY: D. PETERSON
CHANNEL CROSS SECTIONS SHEET 4

PLOT DATE: 28-JUL-2014
DRAWN BY: M. LONGSTREET
CHECKED BY: J. LACROIX
SHEET 54 OF 64

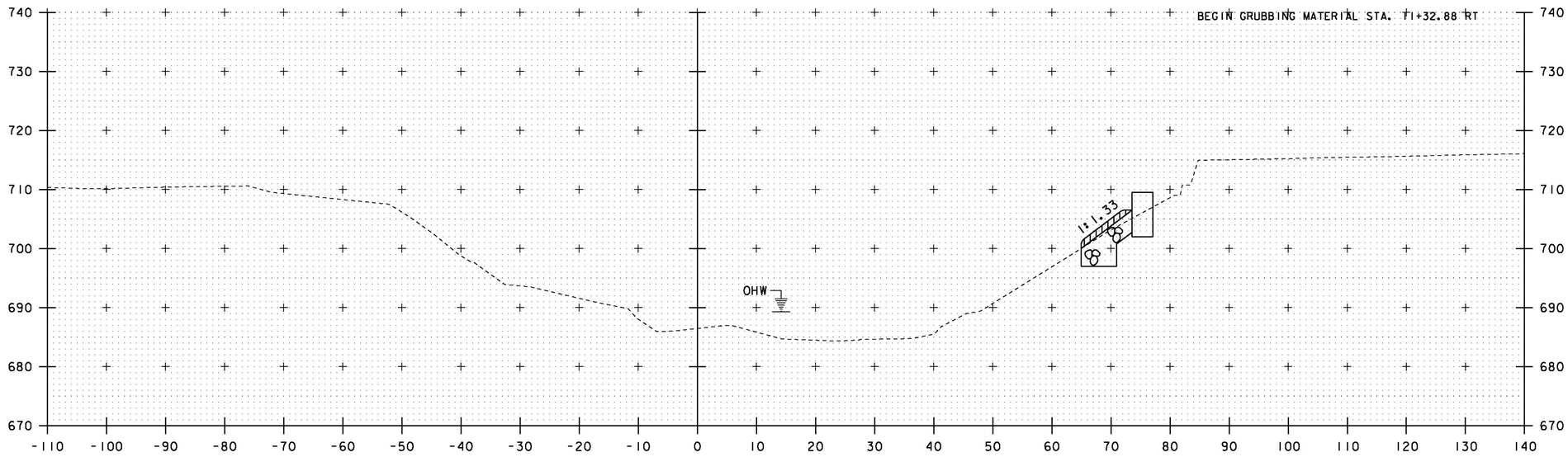

11+30

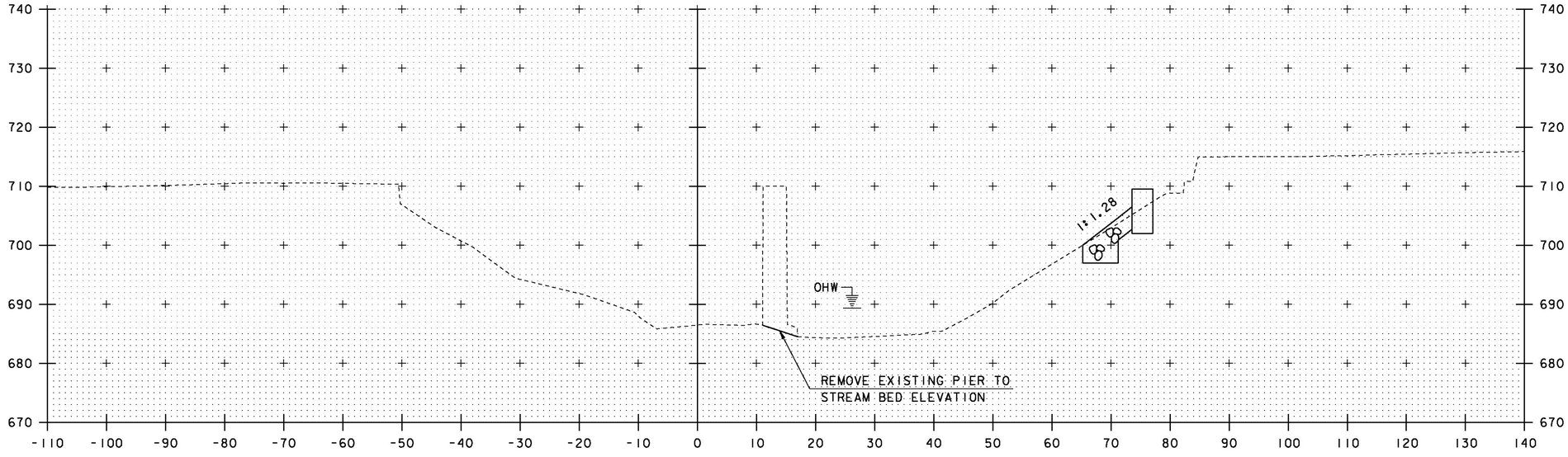

11+20

STA. 11+20 TO STA. 11+30

PROJECT NAME: STOWE
PROJECT NUMBER: BRF 0235 (11)

FILE NAME: s87e052xsl.dgn
PROJECT LEADER: C. CARLSON
DESIGNED BY: D. PETERSON
CHANNEL CROSS SECTIONS SHEET 5

PLOT DATE: 28-JUL-2014
DRAWN BY: M. LONGSTREET
CHECKED BY: J. LACROIX
SHEET 55 OF 64

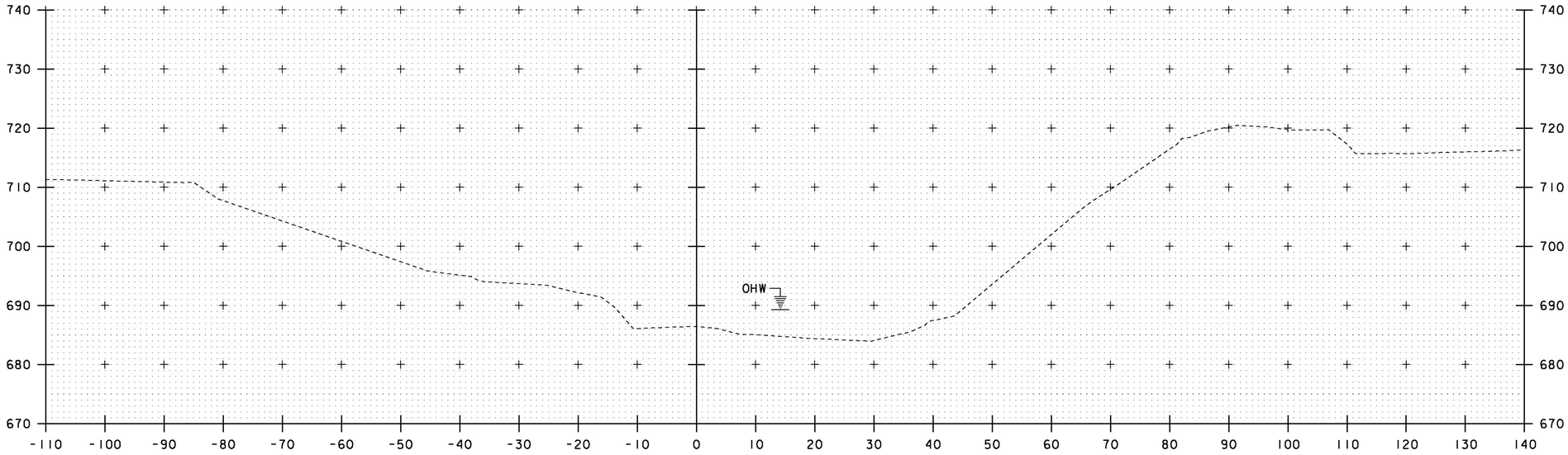

11+50

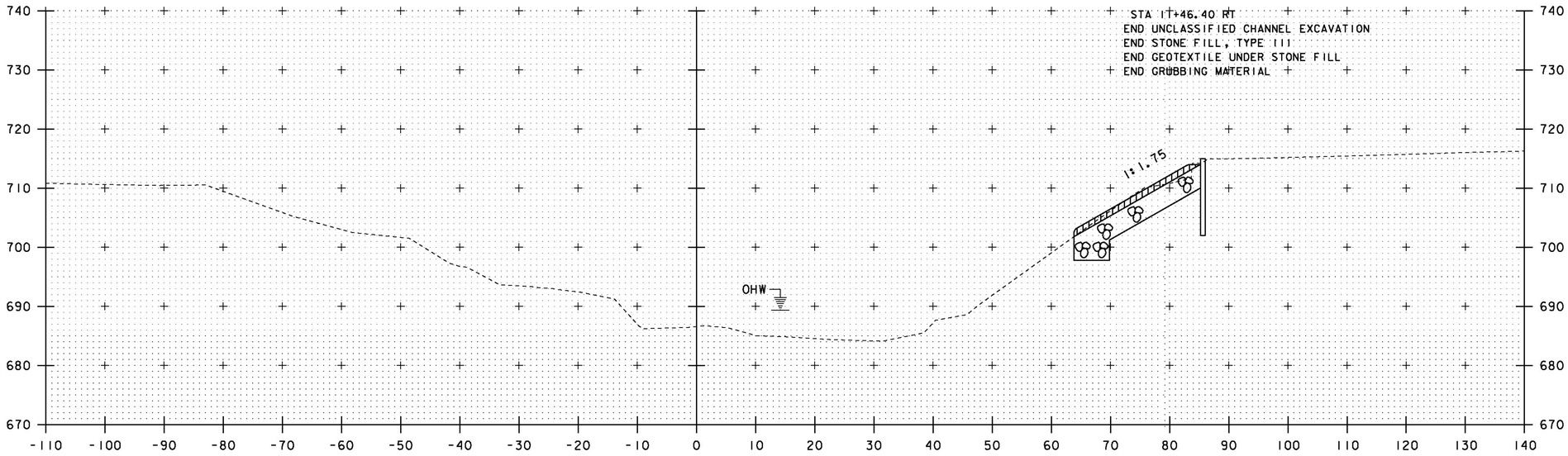

11+40

STA. 11+40 TO STA. 11+50

PROJECT NAME: STOWE
PROJECT NUMBER: BRF 0235 (11)

FILE NAME: s87e052xsl.dgn
PROJECT LEADER: C. CARLSON
DESIGNED BY: D. PETERSON
CHANNEL CROSS SECTIONS SHEET 6

PLOT DATE: 28-JUL-2014
DRAWN BY: M. LONGSTREET
CHECKED BY: J. LACROIX
SHEET 56 OF 64

EPSC PLAN NARRATIVE

1.1 PROJECT DESCRIPTION

THIS PROJECT INVOLVES THE REMOVAL AND REPLACEMENT OF AN EXISTING 148 FOOT BRIDGE WITH A NEW 130 LONG SINGLE SPAN BRIDGE. THE EXISTING BRIDGE DECK IS 36± FEET WIDE. THE EXISTING DECK IS REINFORCED CONCRETE ON STEEL BEAMS. THERE IS A CONCRETE SIDEWALK ON THE BRIDGE WITH AN ENCLOSED WOODED STRUCTURE. THE BRIDGE RESTS ON TWO ABUTMENTS AND ONE PIER. THE EXISTING ABUTMENTS AND PIER WILL BE REMOVED. THE PIER WILL BE REMOVED TO THE STREAMBED ELEVATION. THE NEW BRIDGE WILL BE A CONCRETE DECK ON NEW STEEL GIRDERS WITH NEW INTEGRAL ABUTMENTS WITH PILES ON LEDGE. THE NEW BRIDGE WILL BE THE SAME WIDTH AS THE EXISTING BRIDGE AND WILL INCLUDE THE COMPLETE REPLACEMENT IN KIND OF THE COVERED PEDESTRIAN WALKWAY.

THIS PROJECT IS LOCATED IN STOWE VERMONT, ON VT ROUTE 108, 0.066 MILES WEST OF THE VT 100 AND VT 108 INTERSECTION. THE BRIDGE SPANS OVER THE "LITTLE RIVER".

NOTE: AREA OF DISTURBANCE INCLUDES LIMITS OF EARTH DISTURBANCE WITHIN THE PROJECT AREA, AS WELL AS WASTE, BORROW AND STAGING AREAS, AND OTHER EARTH DISTURBING ACTIVITIES WITHIN OR DIRECTLY ADJACENT TO THE PROJECT LIMITS AS SHOWN ON THE ATTACHED EPSC PLAN.

TOTAL AREA OF DISTURBANCE AS SHOWN ON THE ATTACHED EPSC PLAN IS APPROXIMATELY 0.35 ACRES.

IT IS ANTICIPATED THAT THIS PROJECT WILL LAST ONE CONSTRUCTION SEASON, WITH THE BRIDGE BEING CLOSED TO TRAFFIC FOR NO MORE THAN SIX WEEKS.

1.2 SITE INVENTORY

1.2.1 TOPOGRAPHY

THE TOPOGRAPHY OF THE AREA IS MOSTLY WELL ESTABLISHED FOREST WITH SMALL OPEN AREAS IN A MOUNTAINOUS TERRAIN. THERE ARE THREE PAVED DRIVES IN THE PROJECT LIMITS OR ADJACENT TO THE PROJECT LIMITS. THERE ARE COMMERCIAL BUSINESSES ON THREE SIDES OF THE PROJECT AND ONE DRIVE OR PULL ON THE SOUTH END OF THE BRIDGE TO THE NORTH EAST.

1.2.2 DRAINAGE, WATERWAYS, BODIES OF WATER, AND PROXIMITY TO NATURAL OR MAN-MADE WATER FEATURES

THE CHANNEL IS MEANDERING UPSTREAM WITH A WIDE FLOODPLAIN. THE DOWNSTREAM CHANNEL IS STRAIGHT, STEEPER AND HAS A NARROW FLOODPLAIN WITH STEEP BANKS. THERE ARE SOME BUILDINGS NEAR THE BRIDGE AND CHANNEL. THERE HAVE BEEN PROBLEMS WITH THE STONE FILL IN FRONT OF THE ABUTMENTS FAILING, AND SOME SCOUR AT THE PIER. THE SURVEY SHOWS THERE IS SOME EXPOSED LEDGE UPSTREAM AND DOWNSTREAM. THE PROJECT IS 6 MILES UPSTREAM FROM THE WATERBURY RESERVOIR. THE PROJECT IS 500 FEET DOWN STREAM FROM THE WEST BRANCH OF THE LITTLE RIVER OUTLET, INTO THE LITTLE RIVER.

1.2.3 VEGETATION

THE VEGETATION IN THE PROJECT AREA CONSISTS OF HARDWOOD TREES AND UNDERGROWTH. THE IMPACT TO VEGETATION WILL BE LIMITED TO THE CONSTRUCTION OF A NEW DRAINAGE DITCH NEAR WINGWALL #4 AND NEAR WINGWALL #2 FOR ITS INSTALLATION. IMPACTED VEGETATION WILL BE RESEEDED AFTER THE PROJECT IS COMPLETED.

1.2.4 SOILS

ALL SOIL DATA CAME FROM THE U.S. DEPARTMENT OF AGRICULTURE SOIL CONSERVATION SERVICE FOR THE COUNTY OF LAMOILLE, VERMONT. SOILS ON THE PROJECT SITE ARE:

ADAMS LOAMY FINE SAND	**BERKSHIRE FINE SANDY LOAM**	**RUMNEY FINE SANDY LOAM**
(NOT HIGHLY ERODIBLE)	(HIGHLY ERODIBLE) (DUE TO SLOPES	(NOT HIGHLY ERODIBLE)
K-FACTOR = .24, 2%-8% SLOPES	K-FACTOR = .24, 15%-25% SLOPES	K-FACTOR = .17, 0%-3% SLOPES
HYDROLOGICAL SOIL GROUP: A	HYDROLOGICAL SOIL GROUP: B	HYDROLOGICAL SOIL GROUP: C

NOTE: K-VALUES GENERALLY INDICATE THE FOLLOWING:
0.0-0.23 = LOW EROSION POTENTIAL
0.24-0.36 = MODERATE EROSION POTENTIAL
0.37 AND HIGHER = HIGH EROSION POTENTIAL

1.2.5 SENSITIVE RESOURCE AREAS

CRITICAL HABITATS: NO
HISTORICAL OR ARCHEOLOGICAL AREAS: YES
PRIME AGRICULTURAL LAND: NO
THREATENED AND ENDANGERED SPECIES: NO
WATER RESOURCE: LITTLE RIVER
WETLANDS: NO

1.3 RISK EVALUATION

THIS PROJECT DOES NOT FALL UNDER THE JURISDICTION OF GENERAL PERMIT 3-9020 FOR STORMWATER RUNOFF FROM CONSTRUCTION SITES FOR LOW RISK PROJECTS. ANY MODIFICATIONS TO THE PROJECT THAT INCREASE THE RISK TO ENVIRONMENTAL RESOURCES SHALL BE EVALUATED IN ACCORDANCE WITH THE PERMIT REQUIREMENTS. THE CONTRACTOR WILL BE RESPONSIBLE FOR ANY ADDITIONAL PERMITTING.

1.4 EROSION PREVENTION AND SEDIMENT CONTROL

THE EROSION CONTROL PLANS ARE MEANT AS A GUIDELINE FOR PREVENTING EROSION AND CONTROLLING SEDIMENT TRANSPORT. THE PRINCIPLES OUTLINED IN THIS NARRATIVE CONSIST OF APPLYING MEASURES THROUGHOUT CONSTRUCTION OF THE PROJECT IN ORDER TO MINIMIZE SEDIMENT TRANSPORT TO THE RECEIVING WATERS. THE MEASURES INCLUDE STABILIZATION AND STRUCTURAL PRACTICES, STORM WATER CONTROLS AND OTHER POLLUTION PREVENTION PRACTICES. THEY HAVE BEEN PROPOSED BY THE DESIGNER AS A BASIS FOR PROTECTING RESOURCES AND WILL NEED TO BE BUILT UPON BASED ON THE SPECIFIC MEANS AND METHODS OF THE CONTRACTOR. REFER TO THE LOW RISK SITE HANDBOOK AND APPROPRIATE DETAIL SHEETS FOR SPECIFIC GUIDANCE AND CONSTRUCTION DETAILING.

ALL MEASURES SHALL BE REGULARLY MAINTAINED AND SHALL BE CHECKED FOR SEDIMENT BUILD-UP. SEDIMENT SHALL BE DISPOSED OF AT AN APPROVED SITE WHERE IT WILL NOT BE SUBJECT TO EROSION.

1.4.1 MARK SITE BOUNDARIES

SITE BOUNDARIES AND AREAS THAT CONSTRUCTION EQUIPMENT CAN ACCESS, SHALL BE DELINEATED.

PROJECT DEMARCATION FENCING (PDF) SHALL BE USED TO PHYSICALLY MARK SITE BOUNDARIES. BECAUSE THIS PROJECT FALLS UNDER THE CGP 3-9020, BARRIER FENCE SHALL BE USED INSTEAD OF PROJECT DEMARCATION FENCE WITHIN 100 FEET OF A WATER RESOURCE (STREAM, BROOK, LAKE, POND, WETLAND, ETC).

1.4.2 LIMIT DISTURBANCE AREA

PREVENTING INITIAL SOIL EROSION BY MINIMIZING THE EXPOSED AREA IS MUCH MORE EFFECTIVE THAN TREATING ERODED SEDIMENT. EARTH DISTURBANCE CAN BE MINIMIZED THROUGH CONSTRUCTION PHASING BY ONLY OPENING UP EARTH AS NECESSARY. THIS CAN LIMIT THE AREA THAT WILL BE DISTURBED AND EXPOSED TO EROSION. EMPLOY TEMPORARY CONSTRUCTION STABILIZATION PRACTICES IN INCREMENTAL STAGES AS PHASES CHANGE. FOR PROJECTS WHICH FALL UNDER THE CONSTRUCTION GENERAL PERMIT, ONLY THE ACREAGE LISTED ON THE PERMIT AUTHORIZATION MAY BE EXPOSED AT ANY GIVEN TIME.

MAINTAINING VEGETATED BUFFERS ALONG STREAM BANKS, WETLANDS OR OTHER SENSITIVE AREAS IS A CRUCIAL EROSION AND SEDIMENT CONTROL MEASURE THAT SHOULD BE ESTABLISHED WHEREVER POSSIBLE.

1.4.3 SITE ENTRANCE/EXIT STABILIZATION

TRACKING OF SEDIMENT ONTO PUBLIC HIGHWAYS SHALL BE MINIMIZED TO REDUCE THE POTENTIAL FOR RUNOFF ENTERING RECEIVING WATERS. INSTALLATION SHALL COINCIDE WITH THE CONTRACTOR'S PROGRESS SCHEDULE.

STABILIZED CONSTRUCTION ENTRANCES SHALL BE INSTALLED AS PROPOSED ON THE EPSC PLAN AND ANYWHERE EQUIPMENT WILL BE GOING FROM AREAS OF EXPOSED SOILS TO PAVED SURFACES.

1.4.4 INSTALL SEDIMENT BARRIERS

SEDIMENT BARRIERS SHALL BE UTILIZED TO INTERCEPT RUNOFF AND ALLOW SUSPENDED SEDIMENT TO SETTLE OUT. THEY SHALL BE INSTALLED PRIOR TO ANY UP SLOPE WORK.

SILT FENCE WILL BE INSTALLED AS PROPOSED ON THE EPSC PLAN. BECAUSE THIS PROJECT FALLS UNDER THE CGP 3-9020, WOVEN WIRE REINFORCED SILT FENCE SHALL BE USED INSTEAD OF SILT FENCE WITHIN 100 FEET UPSLOPE OF RECEIVING WATERS.

INLET PROTECTION DEVICES SHALL BE INSTALLED IN THE LOCATIONS SHOWN IN THE PLANS.

1.4.5 DIVERT UPLAND RUNOFF

DIVERSIONARY MEASURES SHALL BE USED TO INTERCEPT RUNOFF FROM ABOVE THE CONSTRUCTION AND DIRECT IT AROUND THE DISTURBED AREA SO THAT CLEAN WATER DOES NOT BECOME MUDDIED WHILE TRAVELING OVER EXPOSED SOILS ON THE CONSTRUCTION SITE.

THE PROJECT AREA IS RELATIVELY FLAT. THEREFORE IT IS NOT ANTICIPATED THAT DIVERSION MEASURES WILL BE NECESSARY.

1.4.6 SLOW DOWN CHANNELIZED RUNOFF

CHECK STRUCTURES SHALL BE UTILIZED TO REDUCE THE VELOCITY, AND THUS THE EROSIVE POTENTIAL, OF CONCENTRATED FLOW IN CHANNELS.

NO SIGNIFICANT CHANNELIZED RUNOFF IS ANTICIPATED. CHECK STRUCTURE MEASURES WILL NOT BE REQUIRED.

1.4.7 CONSTRUCT PERMANENT CONTROLS

PERMANENT STORMWATER TREATMENT DEVICES SHALL BE INSTALLED AS SHOWN ON THE PLANS AND IN ACCORDANCE WITH PERMIT CONDITIONS.

PERMANENT STORMWATER TREATMENT DEVICES ARE NOT PROPOSED FOR THIS PROJECT.

1.4.8 STABILIZE EXPOSED SOILS DURING CONSTRUCTION

ALL AREAS OF DISTURBANCE MUST HAVE TEMPORARY STABILIZATION IN PLACE WITHIN 48 HOURS OF DISTURBANCE OR IN ACCORDANCE WITH THE CONSTRUCTION GENERAL PERMIT 3-9020 AUTHORIZATION.

THE PROJECT AREA IS RELATIVELY FLAT, WITH LIMITED EXPOSED SOILS. NO STABILIZATION MEASURES ARE SPECIFICALLY SHOWN FOR THE PROPOSED PROJECT CONSTRUCTION.

THE FORECAST OF RAINFALL EVENTS SHALL TRIGGER IMMEDIATE PROTECTION OF EXPOSED SOILS IF AREAS EXIST.

1.4.9 WINTER STABILIZATION

VARIOUS MEASURES SPECIFIC TO WINTER MAY BE NECESSARY SHOULD THE PROJECT EXTEND INTO WINTER (OCTOBER 15 THROUGH APRIL 15). REFER TO THE LOW RISK SITE HANDBOOK FOR GUIDANCE.

1.4.10 STABILIZE SOIL AT FINAL GRADE

EXPOSED SOIL MUST BE STABILIZED WITHIN 48 HOURS OF REACHING FINAL GRADE.

SEED, MULCH, FERTILIZER AND LIME SHALL BE USED TO ESTABLISH PERMANENT VEGETATION. FOR SLOPES STEEPER THAN 1:3, BIODEGRADABLE EROSION CONTROL MATTING OR AN EQUIVALENT SHALL BE USED INSTEAD OF MULCH.

1.4.11 DE-WATERING ACTIVITIES

DISCHARGE FROM DEWATERING ACTIVITIES THAT FLOWS OFF OF THE CONSTRUCTION SITE MUST NOT CAUSE OR CONTRIBUTE TO A VIOLATION OF THE VERMONT WATER QUALITY STANDARDS.

DE-WATERING MAY BE REQUIRED TO INSTALL THE ABUTMENT FOOTINGS DEPENDING ON SEASONAL CHANGES TO THE RIVER'S WATER LEVEL.

1.4.12 INSPECT YOUR SITE

INSPECT THE PROJECT SITE BASED ON SPECIAL PROVISION REQUIREMENTS OR CONSTRUCTION GENERAL PERMIT AUTHORIZATION STIPULATIONS.

1.5 SEQUENCE AND STAGING

THIS SECTION WILL BE DEVELOPED BY THE CONTRACTOR USING THE GUIDANCE OUTLINED IN THE VTRANS EPSC PLAN CONTRACTOR CHECKLIST.

1.5.1 CONSTRUCTION SEQUENCE

1.5.2 OFF-SITE ACTIVITIES

IN ADDITION TO THE CONTRACTOR CHECKLIST ANY ACTIVITIES OUTSIDE THE CONSTRUCTION LIMITS SHALL FOLLOW SUBSECTIONS 105.25- 105.29 OF THE STANDARD SPECIFICATIONS FOR CONSTRUCTION.

PROJECT NAME: STOWE
PROJECT NUMBER: BRF 0235 (II)

FILE NAME: s87e052eroDetails.dgn
PROJECT LEADER: C. CARLSON
DESIGNED BY: D. PETERSON
EPSC NARRATIVE

PLOT DATE: 28-JUL-2014
DRAWN BY: M. LONGSTREET
CHECKED BY: J. LACROIX
SHEET 57 OF 64

SOIL INFORMATION:
ADAMS LOAMY FINE SAND
(NOT HIGHLY ERODIBLE)
K-FACTOR = .24, 2%-8% SLOPES
HYDROLOGICAL SOIL GROUP: A

SOIL INFORMATION:
BERKSHIRE FINE SANDY LOAM
(HIGHLY ERODIBLE)
K-FACTOR = .24, 15%-25% SLOPES
HYDROLOGICAL SOIL GROUP: B

SOIL INFORMATION:
RUMNEY FINE SANDY LOAM
(NOT HIGHLY ERODIBLE)
K-FACTOR = .17, 0%-3% SLOPES
HYDROLOGICAL SOIL GROUP: C

CL BEARING #1
STA 3+48.00

BEGIN
PROJECT/BRIDGE
STA 3+47.22

BEGIN APPROACH
MATCH EXISTING
STA 2+00.00

CL BEARING #2
STA 4+78.00

END BRIDGE/PROJECT
STA 4+78.78

END APPROACH
MATCH EXISTING
STA 6+40.00

246.967
S30° 40' 47"E

57.288
S41° 16' 47"E

56.463
S41° 16' 47"E

S 74° 23' 59" W

LITTLE RIVER

RIPARIAN BUFFER

VT STATE PLANE GRID

SCALE: 1" = 20'-0"

PROJECT NAME: STOWE	
PROJECT NUMBER: BRF 0235 (11)	
FILE NAME: s87e052bdr_ero.dgn	PLOT DATE: 28-JUL-2014
PROJECT LEADER: C. CARLSON	DRAWN BY: M. LONGSTREET
DESIGNED BY: D. PETERSON	CHECKED BY: J. LACROIX
EPSC EXISTING LAYOUT	SHEET 58 OF 64

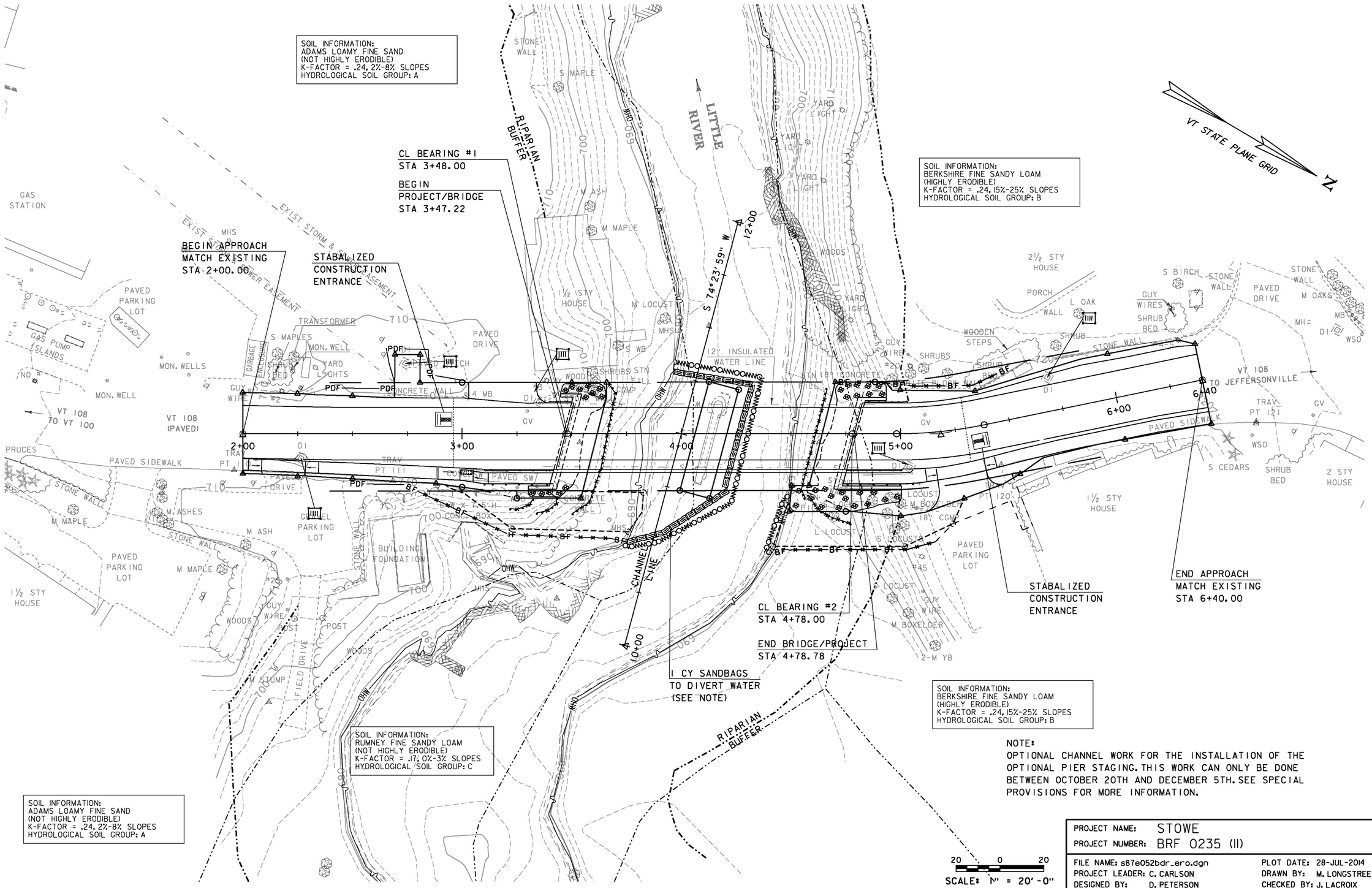

NOTE:
OPTIONAL CHANNEL WORK FOR THE INSTALLATION OF THE OPTIONAL PIER STAGING. THIS WORK CAN ONLY BE DONE BETWEEN OCTOBER 20TH AND DECEMBER 5TH. SEE SPECIAL PROVISIONS FOR MORE INFORMATION.

PROJECT NAME: STOWE	
PROJECT NUMBER: BRF 0235 (II)	
FILE NAME: s87e052bdr_ero.dgn	PLOT DATE: 28-JUL-2014
PROJECT LEADER: C. CARLSON	DRAWN BY: M. LONGSTREET
DESIGNED BY: D. PETERSON	CHECKED BY: J. LACROIX
EPSC CONSTRUCTION LAYOUT	SHEET 59 OF 64

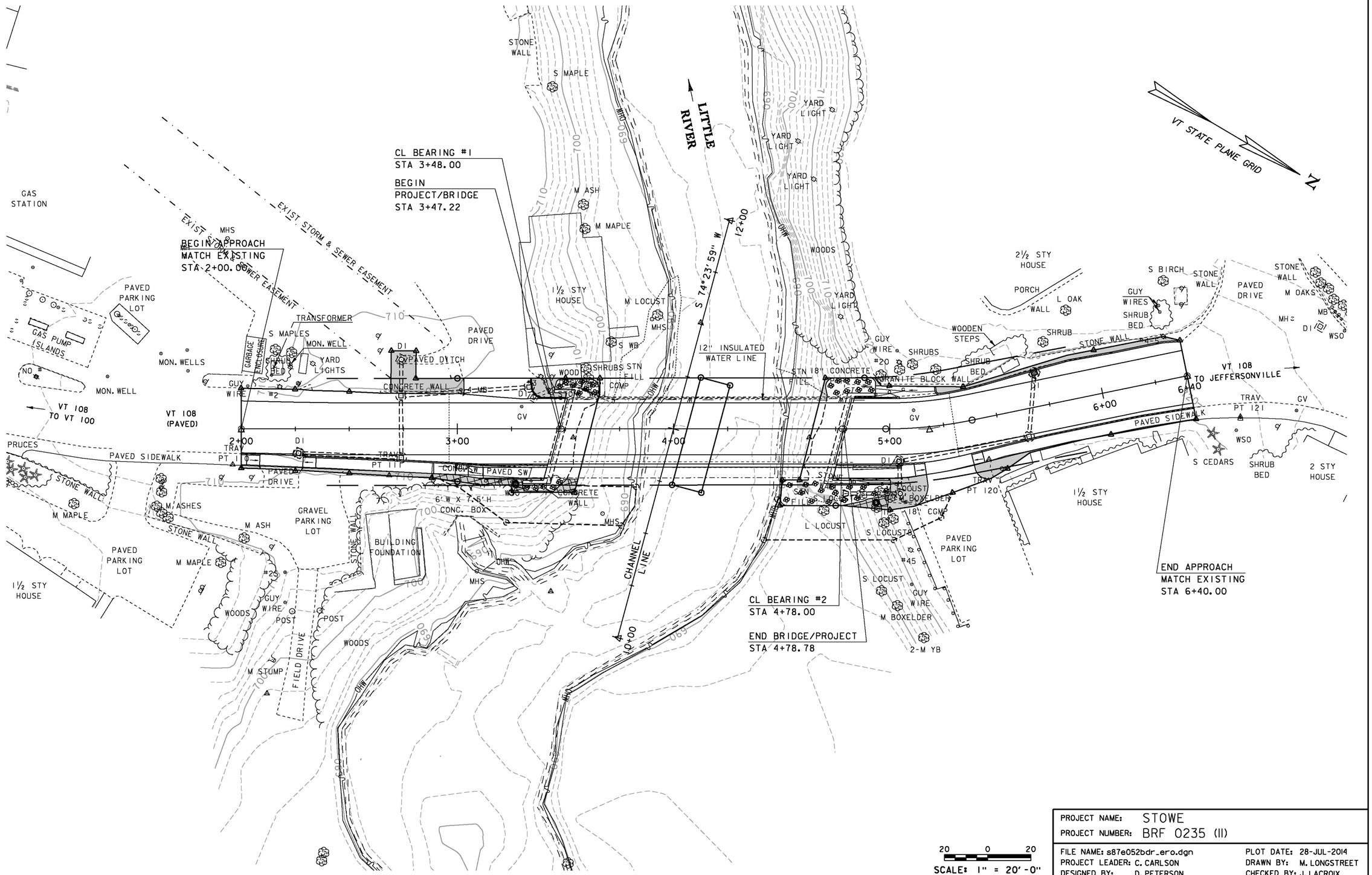

20 0 20

SCALE: 1" = 20'-0"

PROJECT NAME: STOWE	
PROJECT NUMBER: BRF 0235 (11)	
FILE NAME: s87e052bdr_ero.dgn	PLOT DATE: 28-JUL-2014
PROJECT LEADER: C. CARLSON	DRAWN BY: M. LONGSTREET
DESIGNED BY: D. PETERSON	CHECKED BY: J. LACROIX
EPSC FINAL LAYOUT	SHEET 60 OF 64

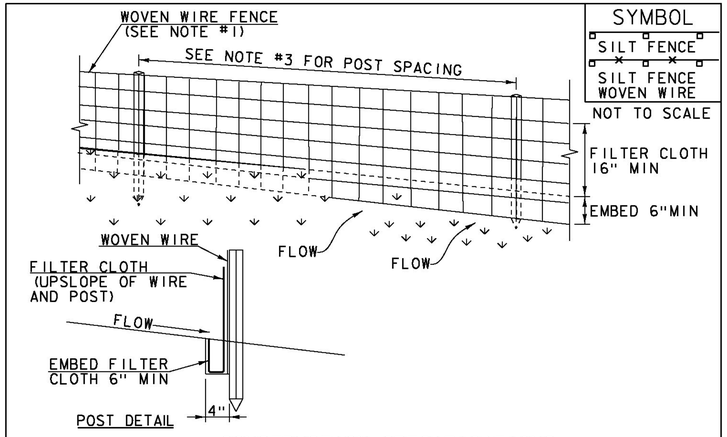

SYMBOL

SILT FENCE

SILT FENCE WOVEN WIRE

NOT TO SCALE

CONSTRUCTION SPECIFICATIONS

1. WOVEN WIRE REINFORCED FENCE IS REQUIRED WITHIN 100' UPSLOPE OF RECEIVING WATERS WHEN THE PROJECT FALLS UNDER A CONSTRUCTION STORMWATER PERMIT. WOVEN WIRE SHALL BE A MIN. 14 GAUGE WITH A 6" MAX. MESH OPENING.
2. FILTER CLOTH SHALL BE EITHER FILTER X, MIRAFI100X, STABILINKA T140N OR APPROVED EQUIVALENT.
3. POST SPACING FOR WIRE-BACKED FENCE SHALL BE 10' MAXIMUM. FOR FILTER-CLOTH FENCE, WHEN ELONGATION IS >50%, POST SPACING SHALL NOT EXCEED 4' AND WHEN ELONGATION IS <50%, POST SPACING SHALL NOT EXCEED 6'.
4. WOVEN WIRE FENCE IS TO BE FASTENED SECURELY TO FENCE POSTS WITH WIRE TIES. FILTER CLOTH IS TO BE FASTENED SECURELY TO WOVEN WIRE FENCE WITH TIES SPACED EVERY 24" AT TOP AND MID SECTION.
5. WHEN TWO SECTIONS OF FILTER CLOTH ADJOIN EACH OTHER THEY SHALL BE OVER-LAPPED BY 6" AND FOLDED.
6. MAINTENANCE SHALL BE PERFORMED AS NEEDED AND MATERIAL REMOVED WHEN SEDIMENT REACHES HALF OF FABRIC HEIGHT.

ADAPTED FROM DETAILS PROVIDED BY: NEW YORK STATE DEC
ORIGINALLY DEVELOPED BY USDA-NRCS
VERMONT DEPARTMENT OF ENVIRONMENTAL CONSERVATION

SILT FENCE

NOTES:
REFER TO "THE VERMONT STANDARDS & SPECIFICATIONS FOR EROSION PREVENTION & SEDIMENT CONTROL -2006- "FROM THE VT AGENCY OF NATURAL RESOURCES FOR ADDITIONAL GUIDANCE.

THIS WORK SHALL BE PERFORMED IN ACCORDANCE WITH SECTION 649 AND AS SHOWN IN THE PLANS FOR GEOTEXTILE FOR SILT FENCE (PAY ITEM 649.51) OR GEOTEXTILE FOR SILT FENCE, WOVEN WIRE REINFORCED (PAY ITEM 649.515).

REVISIONS	
MARCH 21, 2008	WHF
DECEMBER 11, 2008	WHF
JANUARY 13, 2009	WHF

VAOT RURAL AREA MIX

	LBS/AC				
% WEIGHT	BROADCAST	HYDROSEED	NAME	GERM %	PURITY %
37.5%	22.5	45	CREEPING RED FESCUE	85%	98%
37.5%	22.5	45	TALL FESCUE	90%	95%
5.0%	3	6	RED TOP	90%	95%
15.0%	9	18	BIRDSFOOT TREFOIL	85%	98%
5.0%	3	6	ANNUAL RYE GRASS	85%	95%
100%	60	120			

VAOT URBAN AREA MIX

	LBS/AC				
% WEIGHT	BROADCAST	HYDROSEED	NAME	GERM %	PURITY %
42.5%	34	68	CREEPING RED FESCUE	85%	98%
10.0%	8	16	PERENNIAL RYE GRASS	90%	95%
42.5%	34	68	KENTUCKY BLUE GRASS	85%	85%
5.0%	4	8	ANNUAL RYE GRASS	85%	95%
100%	80	160			

SOIL AMENDMENT GUIDANCE

FERTILIZER		LIME	
BROADCAST	HYDROSEED	BROADCAST	HYDROSEED
10-20-10	*FOLLOW*	PELLETIZED	*FOLLOW*
500 LBS/AC	*MANUFACTURER*	2 TONS/AC	*MANUFACTURER*

CONSTRUCTION GUIDANCE

1. RURAL SEED MIX: USE AS INDICATED IN THE PLANS AND/OR FOR ALL ESTABLISHED UPLAND (NON WETLAND) AREAS DISTURBED BY THE CONTRACTOR.
2. URBAN SEED MIX: USE AS INDICATED IN THE PLANS AND/OR FOR ALL ESTABLISHED LAWN AREAS DISTURBED BY THE CONTRACTOR.
3. ALL SEED MIXTURES: SHALL NOT HAVE A WEED CONTENT EXCEEDING 0.40% BY WEIGHT AND SHALL BE FREE OF ALL NOXIOUS SEED.
4. FERTILIZER AND LIMESTONE: SHALL FOLLOW RATES SHOWN ON PLAN OR AS DIRECTED BY THE ENGINEER
5. HAY MULCH: TO BE PLACED ON EARTH SLOPES AT THE RATE OF 2 TONS/ACRE, ACHIEVE 90% GROUND COVER OR AS DIRECTED BY THE ENGINEER.
6. TOPSOIL: TO BE USED WITH SEED AS INDICATED ON THE PLANS, OR AS DIRECTED BY THE ENGINEER.
7. HYDROSEEDING: ALTHOUGH GUIDANCE IS GIVEN ABOVE THE SITE CONDITIONS AND THE TYPE OF HYDROSEED WILL ULTIMATELY DICTATE THE AMOUNTS AND TYPES OF SOIL AMENDMENTS TO BE APPLIED
8. TURF ESTABLISHMENT: PLACING SEED, FERTILIZER, LIME AND MULCH PRIOR TO SEPTEMBER 15 AND AFTER APRIL 15 CAN BETTER ENSURE A VIGOROUS GROWTH OF GRASS.

ADAPTED FROM VTRANS TECHNICAL LANDSCAPE MANUAL FOR ROADWAYS AND TRANSPORTATION FACILITIES

TURF ESTABLISHMENT

THIS WORK SHALL BE PERFORMED IN ACCORDANCE WITH SECTION 651 FOR SEED (PAY ITEM 651.15)

REVISIONS	
JUNE 23, 2009	WHF
JANUARY 15, 2010	WHF
FEBRUARY 16, 2011	WHF

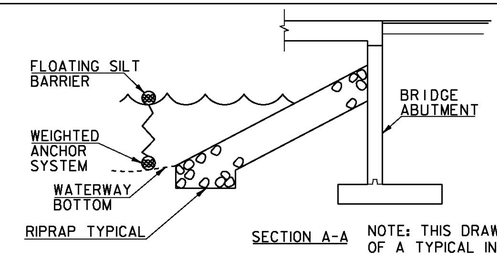

SYMBOL

NOT TO SCALE

SECTION A-A

NOTE: THIS DRAWING IS A DEPICTION OF A TYPICAL INSTALLATION OF FILTER CURTAIN. IT IN NO WAY DEFINES THE TYPE OR USE OF COFFERDAM IF USED.

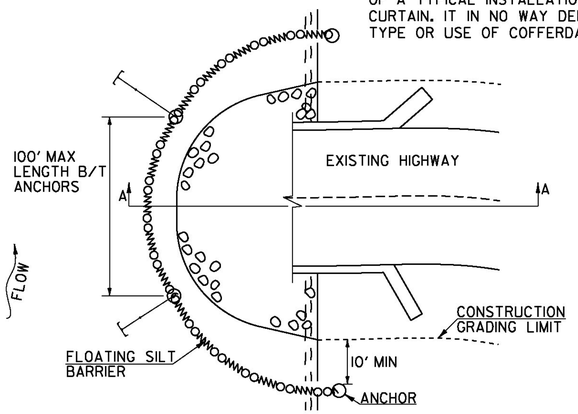

CONSTRUCTION SPECIFICATIONS

1. FILTER CURTAIN SHALL NOT BE PLACED ACROSS A FLOWING WATERWAY, OR IN A WATERWAY WITH STREAM VELOCITIES GREATER THAN 1.5 FEET/SECOND.
2. MAXIMUM 100' LENGTH BETWEEN ANCHORS.
3. LAST SECTION SHALL TERMINATE A MINIMUM OF 10' BEYOND LIMIT OF DISTURBANCE.
4. THE WEIGHTED ANCHOR SYSTEM SHALL BE A TYPE WHICH ALLOWS THE CURTAIN TO CONFORM TO THE BOTTOM OF THE WATERWAY.
5. THE CURTAIN SHALL BE REMOVED BY SLOWLY PULLING TOWARD THE SHORE MINIMIZING THE ESCAPE OF SEDIMENTS INTO WATERWAY.

FILTER CURTAIN

THIS WORK SHALL BE PERFORMED IN ACCORDANCE WITH SECTION 649 FOR GEOTEXTILE FOR FILTER CURTAIN (PAY ITEM 649.61).

REVISIONS	
APRIL 1, 2008	WHF
JANUARY 13, 2009	WHF
SEPTEMBER 4, 2009	WHF

PROJECT NAME: STOWE
PROJECT NUMBER: BRF 0235 (11)

FILE NAME: s87e052eroDetails.dgn
PROJECT LEADER: C. CARLSON
DESIGNED BY: D. PETERSON
EPSC DETAIL SHEET 1

PLOT DATE: 28-JUL-2014
DRAWN BY: M. LONGSTREET
CHECKED BY: J. LACROIX
SHEET 61 OF 64

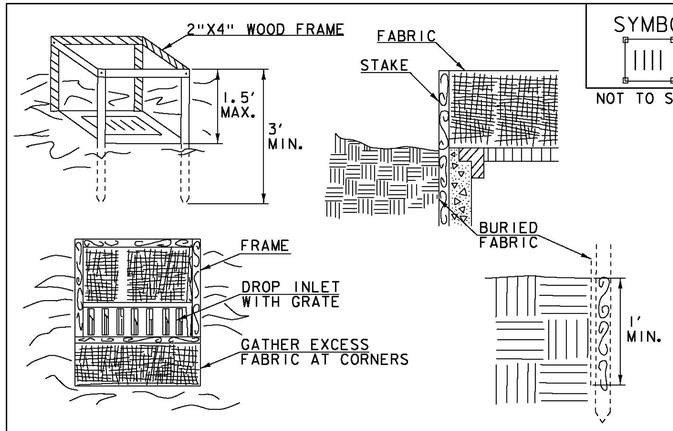

SYMBOL

NOT TO SCALE

CONSTRUCTION SPECIFICATIONS

1. FILTER FABRIC SHALL HAVE AN APPARENT OPENING SIZE OF 40-85. BURLAP MAY BE USED FOR SHORT TERM APPLICATIONS.
2. CUT FABRIC FROM A CONTINUOUS ROLL TO ELIMINATE JOINTS. IF JOINTS ARE NEEDED THEY WILL BE OVERLAPPED TO THE NEXT STAKE.
3. STAKE MATERIALS WILL BE STANDARD 2"x 4" WOOD OR EQUIVALENT METAL WITH A MINIMUM LENGTH OF 3'.
4. SPACE STAKES EVENLY AROUND INLET 3' APART AND DRIVE A MINIMUM 18" DEEP. SPANS GREATER THAN 3' MAY BE BRIDGED WITH THE USE OF WIRE MESH BEHIND THE FILTER FABRIC FOR SUPPORT.
5. FABRIC SHALL BE EMBEDDED 1' MINIMUM BELOW GROUND AND BACKFILLED. IT SHALL BE SECURELY FASTENED TO THE STAKES AND FRAME.
6. A 2" x 4" WOOD FRAME SHALL BE COMPLETED AROUND THE CREST OF THE FABRIC FOR OVER FLOW STABILITY.
7. MAXIMUM DRAINAGE AREA 1 ACRE

ADAPTED FROM DETAILS PROVIDED BY: NEW YORK STATE DEC
ORIGINALLY DEVELOPED BY USDA-NRCS
VERMONT DEPARTMENT OF ENVIRONMENTAL CONSERVATION

FILTER FABRIC DROP INLET PROTECTION

NOTES:
REFER TO "THE VERMONT STANDARDS & SPECIFICATIONS FOR EROSION PREVENTION & SEDIMENT CONTROL -2006- " FROM THE VT AGENCY OF NATURAL RESOURCES FOR ADDITIONAL GUIDANCE.

THIS WORK SHALL BE PERFORMED IN ACCORDANCE WITH SECTION 653 FOR INLET PROTECTION DEVICE, TYPE I (PAY ITEM 653.40).

REVISIONS	
MARCH 7, 2008	WHF
JANUARY 13, 2009	WHF

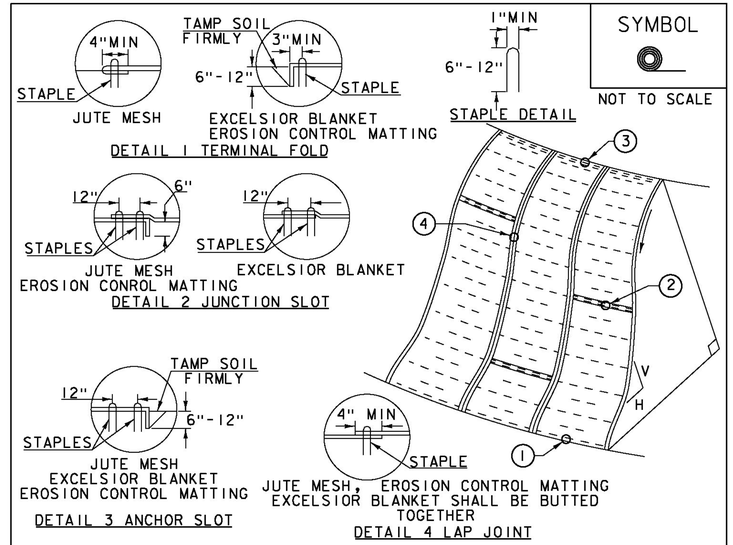

SYMBOL

NOT TO SCALE

CONSTRUCTION SPECIFICATIONS

1. APPLY TO SLOPES GREATER THAN 3H: IV OR WHERE NECESSARY TO AID IN ESTABLISHING VEGETATION.
2. APPLY FERTILIZER, LIME SEED PRIOR TO PLACING MATTING.
3. STAPLES ARE TO BE PLACED ALTERNATELY, IN COLUMNS APPROXIMATELY 2' APART AND IN ROWS APPROXIMATELY 3' APART. APPROXIMATELY 175 STAPLES ARE REQUIRED PER 4'X225' ROLL OF MATERIAL AND 125 STAPLES ARE REQUIRED PER 4'X150' ROLL OF MATERIAL.
4. DISTURBED AREAS SHALL BE SMOOTHLY GRADED. EROSION CONTROL MATERIAL SHALL BE PLACED LOOSELY OVER GROUND SURFACE. DO NOT STRETCH.
5. ALL TERMINAL ENDS AND TRANSVERSE LAPS SHALL BE STAPLED AT APPROXIMATELY 12" INTERVALS.

ADAPTED FROM DETAILS PROVIDED BY: NEW YORK STATE DEC
ORIGINALLY DEVELOPED BY USDA-NRCS
VERMONT DEPARTMENT OF ENVIRONMENTAL CONSERVATION

ROLLED EROSION CONTROL PRODUCT (RECP) SIDE SLOPE

NOTES:
REFER TO "THE VERMONT STANDARDS & SPECIFICATIONS FOR EROSION PREVENTION & SEDIMENT CONTROL -2006- " FROM THE VT AGENCY OF NATURAL RESOURCES FOR ADDITIONAL GUIDANCE.
THIS WORK SHALL BE PERFORMED IN ACCORDANCE WITH SECTION 653 AND AS SHOWN IN THE PLANS FOR TEMPORARY EROSION MATTING (PAY ITEM 653.20) OR PERMANENT EROSION MATTING (PAY ITEM 653.21).

REVISIONS	
APRIL 16, 2007	JMF
JANUARY 13, 2009	WHF

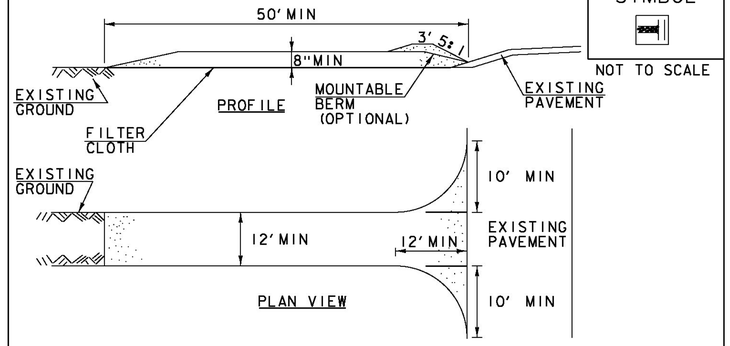

SYMBOL

NOT TO SCALE

CONSTRUCTION SPECIFICATIONS

1. STONE SIZE- USE 1-4" STONE, RECLAIMED OR RECYCLED CONCRETE EQUIVALENT.
2. LENGTH- NOT LESS THAN 50' (EXCEPT ON A SINGLE RESIDENCE LOT WHERE A 30' MINIMUM LENGTH APPLIES).
3. THICKNESS- NOT LESS THAN 8".
4. WIDTH- 12' MINIMUM, BUT NOT LESS THAN THE FULL WIDTH AT POINTS WHERE INGRESS OR EGRESS OCCURS. 24' IF SINGLE ENTRANCE TO SITE.
5. GEOTEXTILE MUST BE PLACED OVER THE ENTIRE AREA PRIOR TO PLACING STONE.
6. SURFACE WATER- ALL SURFACE WATER FLOWING OR DIVERTED TOWARD CONSTRUCTION ENTRANCES SHALL BE PIPED BENEATH THE ENTRANCE. IF PIPING IS IMPRACTICAL, A MOUNTABLE BERM WITH 5: 1 SLOPES WILL BE PERMITTED.
7. MAINTENANCE- THE ENTRANCE SHALL BE MAINTAINED IN A CONDITION WHICH WILL PREVENT TRACKING OR FLOWING OF SEDIMENT ONTO PUBLIC RIGHTS-OF-WAY, ALL SEDIMENT SPILLED, DROPPED, WASHED OR TRACKED ONTO PUBLIC RIGHTS-OF-WAY MUST BE REMOVED IMMEDIATELY.
8. WHEN WASHING IS REQUIRED, IT SHALL BE DONE ON AN AREA STABILIZED WITH STONE AND WHICH DRAINS INTO AN APPROVED SEDIMENT TRAPPING DEVICE.
9. PERIODIC INSPECTION AND NEEDED MAINTENANCE SHALL BE PROVIDED ACCORDING TO PERMIT REQUIREMENTS.

ADAPTED FROM DETAILS PROVIDED BY: NEW YORK STATE DEC
ORIGINALLY DEVELOPED BY USDA-NRCS
VERMONT DEPARTMENT OF ENVIRONMENTAL CONSERVATION

STABILIZED CONSTRUCTION ENTRANCE

NOTES:
REFER TO "THE VERMONT STANDARDS & SPECIFICATIONS FOR EROSION PREVENTION & SEDIMENT CONTROL -2006- " FROM THE VT AGENCY OF NATURAL RESOURCES FOR ADDITIONAL GUIDANCE.

THIS WORK SHALL BE PERFORMED IN ACCORDANCE WITH SECTION 653 FOR VEHICLE TRACKING PAD (PAY ITEM 653.35) OR AS SPECIFIED IN THE CONTRACT.

REVISIONS	
MARCH 24, 2008	WHF
JANUARY 13, 2009	WHF

PROJECT NAME: STOWE
PROJECT NUMBER: BRF 0235 (11)

FILE NAME: s87e052eroDetails.dgn
PROJECT LEADER: C. CARLSON
DESIGNED BY: D. PETERSON
EPSC DETAIL SHEET 2

PLOT DATE: 28-JUL-2014
DRAWN BY: M. LONGSTREET
CHECKED BY: J. LACROIX
SHEET 62 OF 64

BOX BEAM GUARDRAIL (PAINTED BROWN)
VT108 STA 3+40.12 LT - STA 3+50.21 LT
VT108 STA 4+83.56 LT - STA 5+03.00 LT
VT108 STA 3+10.78 RT - STA 3+41.87 RT
VT108 STA 4+75.08 RT - STA 5+00.00 RT

VERTICAL GRANITE CURB
VT108 STA 3+34.25 LT - STA 3+50.21 LT
VT108 STA 4+83.56 LT - STA 5+05.00 LT
VT108 STA 5+23.64 LT - STA 6+40.00 LT
VT108 STA 2+00.00 RT - STA 2+08.66 RT
VT108 STA 2+28.65 RT - STA 3+41.87 RT
VT108 STA 4+75.08 RT - STA 5+14.83 RT
VT108 STA 5+23.64 RT - STA 5+69.34 RT
VT108 STA 5+72.32 RT - STA 6+40.00 RT

PLANK RAIL
VT108 STA 3+10.00 RT - STA 3+41.87 RT
VT108 STA 4+73.60 RT - STA 5+08.00 RT

BRIDGE RAILING, GALVANIZED STEEL TUBING/CONCRETE COMBINATION (PAINTED BROWN)
VT108 STA 3+50.21 LT - STA 4+83.56 LT

CONCRETE, HIGH PREFORMACE CLASS A (BARRIER WALL)
VT108 STA 3+40.12 RT - STA 4+75.08 RT

PORTLAND CEMENT CONCRETE SIDEWALK, 5 INCH
VT108 STA 2+00.00 RT - STA 2+08.66 RT
VT108 STA 2+28.65 RT - STA 3+41.87 RT
VT108 STA 4+75.08 RT - STA 5+14.83 RT
VT108 STA 5+35.23 RT - STA 6+40.00 RT

PORTLAND CEMENT CONCRETE SIDEWALK, 8 INCH
VT108 STA 2+08.66 RT - STA 2+28.65 RT
VT108 STA 5+14.83 RT - STA 5+35.23 RT

DETECTABLE WARNING SURFACE
VT108 STA 3+02.00 RT

VT STATE PLANE GRID N

N/F WILDFLOWER DESIGN INC.

N/F STOWE INN, LLC.

N/F FISHMAN

N/F R.L. VALLEE

VT 108 STA 4+00.00 = CHANNEL LINE STA 11+00.00
△ = 75° LT

CL BEARING #1
STA 3+48.00

BEGIN PROJECT/BRIDGE
STA 3+47.22

PT
STA 4+98.18

PC
STA 5+38.22

POE
STA 6+40.00

REMOVE SERVICE LINES DURING CONSTRUCTION

TEMP SERVICE LINE DE-ENERGIZE LEAVE IN PLACE (HARD GUARD)

BEGIN APPROACH MATCH EXISTING STA 2+00.00

POB STA 2+00.00

BM NO.1
CHISELED SQUARE ON CONCRETE PAD
EL. 711.25

BM NO.2
VT SURVEY MARK
EL. 711.603

BM NO.3
2" DIA CONDUIT END
NW CORNER TOP CONCRETE STEP
EL. 717.851

246.967
S30°40'47"E

56.463
S41°16'47"E

57.288
S41°16'47"E

N30°36'01"W

N42°14'10"W

EXISTING BRIDGE DATA
CONCRETE DECK ON STEEL BEAMS
CONCRETE ABUTMENTS AND PIER
WOOD COVERED WALKWAY
TWO SPANS @ 74' EACH
OVERALL LENGTH = 148'
OVERALL WIDTH = 38.2'

LINE SHOWN ON THIS PLAN AS EXISTING PROPERTY LINES P/L ARE BELIEVED TO BE ACCURATE BUT SHOULD NOT BE RELIED UPON FOR PURPOSES UNRELATED TO THE STATE OF VERMONT'S AQUISITION OF LAND AND RIGHTS FOR THIS PROJECT.

1
McKECHNIE 2005 FAMILY TRUST

2
STERLING VENTURES INC.

3
RAVEN BEACH HOLDINGS, LLC.

BEGIN ROW PROJECT
STOWE BRF 0235 (11)
STA. 2+80 26.14' RT.

END ROW PROJECT
STOWE BRF 0235 (11)
STA. 5+52 24.56' RT.

REMOVAL AND DISPOSAL OF GUARDRAIL
VT108 STA 3+12.00 - STA 3+35.00 RT
VT108 STA 4+83.00 - STA 5+05.00 RT

PRECAST REINFORCED CONCRETE MANHOLE WITH CAST IRON COVER
VT108 STA 5+04.00 - 30.00' RT

PRECAST REINFORCED CONCRETE DROP INLET WITH CAST IRON GRATE
VT108 STA 2+26.50 - 11.20' RT
VT108 STA 2+74.00 - 13.27' RT
VT108 STA 2+73.90 - 15.36' LT
VT108 STA 3+33.11 - 19.35' LT
VT108 STA 5+04.00 - 15.09' RT
VT108 STA 5+62.69 - 12.73' RT
VT108 STA 5+70.96 - 15.55' LT

CONSTRUCT PAVED DRAINAGE DITCH
VT108 STA 5+00.00 RT (5.5' Wx27' L)

CONSTRUCT PAVED APRON
VT108 STA 3+25.00 LT (9.43' Wx35' L)

CONSTRUCT DRIVE (PAVED)
VT108 STA 5+25.00 RT (8.53' Wx38' L)

REMOVAL AND DISPOSAL OF GUARDRAIL
VT108 STA 3+12.52 RT (20.0')
VT108 STA 3+39.25 LT (9.0')
VT108 STA 5+04.64 RT (22.5')
VT108 STA 5+07.86 LT (14.2')

COLD PLANING, BITUMINOUS PAVEMENT
VT108 STA 2+39.50 - 2+89.50
VT108 STA 5+37.50 - 6+40.00

REMOVAL AND DISPOSAL OF PLANK RAIL
VT108 STA 5+05.54 RT (38') - STA 5+09.66 RT (52')

PLANK RAIL (REPLACE IN-KIND)
VT108 STA 5+05.54 RT (38') - STA 5+09.66 RT (52')

CURVE (1)
DELTA = 11°38'09"
D = 28°56'14"
R = 198.00'
T = 20.17'
L = 40.21'
E = 1.03'

TEMPORARY UNDERGROUND SERVICE
2" DIA CONDUIT
APPROACH MATCH EXISTING
STA 6+40.00

TEMP UTILITY AND CONST. ACCESS BRIDGE

8" TEMP WATER

EXISTING ELECTRIC CONDUIT TO COVERED WALKWAY LIGHTING

GUY ANCHOR REMOVED ONLY WHEN NECESSARY (BY OTHERS)

TEMPORARY CONSTRUCTION LIMITS TYP.

ABANDONED WATERLINE

CHANNEL LINE

LITTLE RIVER

FOR R.O.W. USE ONLY

20 0 20
SCALE: 1" = 20'-0"

PROJECT NAME:	STOWE
PROJECT NUMBER:	BRF 0235 (11)
FILE NAME: s87e052bdr.dgn	PLOT DATE: 28-JUL-2014
PROJECT LEADER: C. CARLSON	DRAWN BY: M. LONGSTREET
DESIGNED BY: D. PETERSON	CHECKED BY: J. LACROIX
R.O.W. LAYOUT SHEET	ROW SHEET 63 OF 64

STATE OF VERMONT
AGENCY OF TRANSPORTATION

RIGHT - OF - WAY DETAIL SHEET

TABLE OF PROPERTY ACQUISITION

PARCEL NO.	PROPERTY OWNER	SHEET NO.	BEGINNING STATION	ENDING STATION	TAKE	REMAINDER	RIGHT			RECORDING DATA					REMARKS
					AREA±	AREA±	TYPE	(T)/(P)	AREA ±	TITLE	DATE	TOWN / CITY	BOOK	PAGE	
1	McKECHNIE 2005 FAMILY TRUST	1	2+80 RT	3+81 RT			CONSTRUCTION	T	1,507 SF	WDOE		STOWE			INCL. EC, BF&TEMP. WATER LINE BRIDGE
			3+10 RT	3+55 RT			SLOPE	P	124 SF						INCLUDES STONE FILL
2	STERLING VENTURES, INC.	1	4+42 RT	5+02 RT			CONSTRUCTION	T	1,123 SF	WDOE		STOWE			INCL. EC, BF&TEMP. WATER LINE BRIDGE
			4+57 RT	4+98 RT			SLOPE	P	291 SF						INCLULDES STONE FILL
			4+81 RT	4+95 RT			CUL & DRAIN	P							
3	RAVEN BEACH HOLDINGS, LLC.	1	4+93 RT	5+00 RT			SLOPE	P	33 SF	WDOE		STOWE			INCLUDES STONE FILL
			4+95 RT	5+15 RT			SLOPE	T	207 SF						
			4+98 RT	5+51 RT			CONSTRUCTION	T	892 SF						INCL. EC, BF, TEMP. WATER LINE BRIDGE
															& TEMP. UNDERGROUND UTILITY
			4+98 RT	5+15 RT			REMOVE	T							CULVERT
			4+95 RT	5+06 RT			INSTALL & MAINTAIN	P							CULVERT INCLUDING D.I.
			5+25 RT				DRIVE	T							38' WIDE PAVED; MM 009

TABLE OF REVISIONS

REVISION NO.	SHEET NO.	DESCRIPTION	DATE
1		CHANGE PROJECT NUMBER FROM BHF 0235 (11) TO	04/29/14
		BRF 0235 (11). PER C.O. 9878	
		MADE BY: MR APPROVED BY: RC	
2	4,5,9	DELETE PEDESTRIAN BRIDGE NOTE FROM P.I. SHEET	05/09/14
		ADD TEMPORARY WATER LINE BRIDGE TO LAYOUT	
		ADD EXISTING EDGE OF PAVEMENT TO EPSC SHEET	
		PER C.O. 9883	
		MADE BY: MR APPROVED BY: RC	
3	3,4	PARCEL NO. 3 RAVEN BEACH. INCREASE CONSTRUCTION	05/27/14
		(T) TO INCLUDE TEMPORARY UNDERGROUND UTILITY.	
		CHANGE ENDING STA. OF CONST. (T) TO 5+51 RT.	
		CHANGE AREA OF CONST. (T) TO 892 SF±	
		PER C.O. 9888	
		MADE BY: JB APPROVED BY: RC	
4	3,4	PARCEL NO. 2 STERLING VENTURES. ADD CUL & DR (P) AT ST.	06/06/14
		4+81 RT. TO 4+95 RT. PER C.O. 9894	
		MADE BY: JB APPROVED BY: RC	
5	3	PARCEL NO. 3 RAVEN BEACH. CHANGE STATIONS OF INSTALL	06/06/14
		& MAINTAIN TO 4+95 RT TO 5+06 RT. PER C.O. 9895	

PLOT DATE 06/06/14

PLAN LEGEND

- EXISTING RIGHT-OF-WAY
- TAKING WITH ACCESS
- TAKING WITHOUT ACCESS
- CLEAR ZONE (CZ)
- PROPERTY LINE (P L)
- TOE OF SLOPE
- TOP OF CUT
- SLOPE RIGHT (SR (P))
- CONSTRUCTION RIGHT (CONST.(T))
- PROJECT DEMARCATION FENCE (PDF)

EC	-EROSION CONTROL
(P)	-PERMANENT
(T)	-TEMPORARY
DR.	-DRAINAGE RIGHT
DIT.	-DITCHING RIGHT
CH.	-CHANNEL RIGHT
DRIVE	-DRIVE RIGHT
CUL.	-CULVERT RIGHT
C&T	-CLEARING & TRIMMING RIGHT
SR	-SLOPE RIGHT
UE	-UTILITY EASEMENT

APPROVED: RYAN CLOUTIER DATE: 4-15-2014
CHIEF, PLANS & TITLES

PROJECT NAME: **STOWE**
PROJECT NUMBER: **BRF 0235 (11)**

FILE NAME: **r87e052detail.xls** PLOT DATE:
PROJECT LEADER: **C. CARLSON** DRAWN BY: **G. ROY**
DESIGNED BY: **D. PETERSON** CHECKED BY: **J. LACROIX**
R.O.W. DETAIL SHEET **ROW** SHEET **64** OF **64**

CONCRETE GENERAL NOTES

1. ALL EXPOSED EDGES OF CONCRETE SHALL BE CHAMFERED 1" x 1"

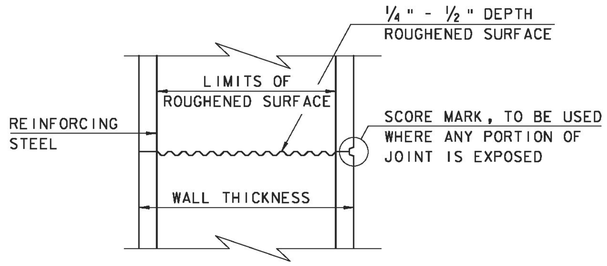

TYPICAL HORIZONTAL CONSTRUCTION JOINT
(NOT TO SCALE)

1. THE SURFACE OF THE CONCRETE CONSTRUCTION JOINTS SHALL BE CLEANED AND FREE OF LAITANCE.

2. IMMEDIATELY BEFORE NEW CONCRETE IS PLACED, ALL CONSTRUCTION JOINTS SHALL BE WETTED AND STANDING WATER REMOVED.

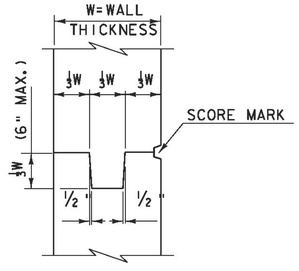

TYPICAL CONCRETE CONSTRUCTION JOINT
(NOT TO SCALE)

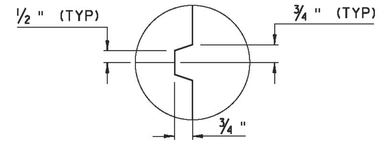

SCORE MARK DETAIL
(NOT TO SCALE)

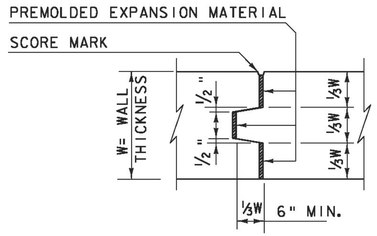

TYPICAL CONCRETE EXPANSION JOINT
(NOT TO SCALE)

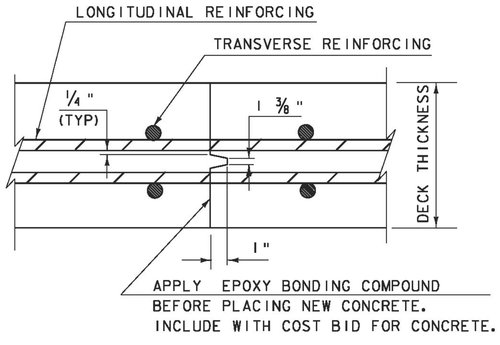

TRANSVERSE BRIDGE SLAB
CONSTRUCTION JOINT DETAILS
(NOT TO SCALE)

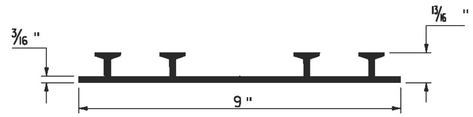

P.V.C. WATERSTOP FOR
CONSTRUCTION JOINTS
(NOT TO SCALE)

PAYMENT FOR THE P.V.C. WATERSTOP SHALL BE INCIDENTAL TO THE UNIT BID PRICE FOR THE ADJACENT CONCRETE.

OTHER CONFIGURATIONS OF WATERSTOP MAY BE USED UPON APPROVAL OF THE ENGINEER.

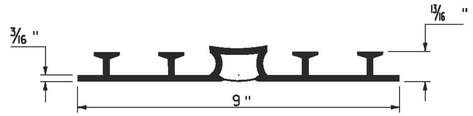

P.V.C. WATERSTOP FOR
EXPANSION JOINTS
(NOT TO SCALE)

PAYMENT FOR THE P.V.C. WATERSTOP SHALL BE INCIDENTAL TO THE UNIT BID PRICE FOR THE ADJACENT CONCRETE.

OTHER CONFIGURATIONS OF WATERSTOP MAY BE USED UPON APPROVAL OF THE ENGINEER.

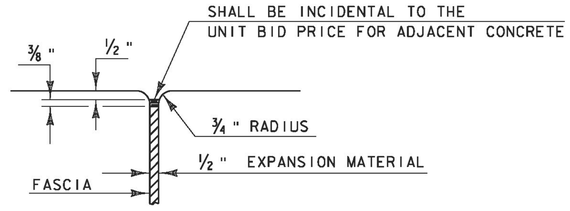

JOINT BETWEEN FASCIA
AND WINGWALL
(NOT TO SCALE)

REVISIONS	
MAY 7, 2010	APPROVED FOR USE BY VAOT STRUCTURES SECTION

CONCRETE DETAILS AND NOTES

VERMONT AGENCY OF TRANSPORTATION
STRUCTURES - SECTION

STRUCTURES DETAIL
SD-501.00

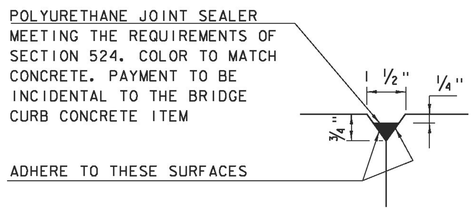

DETAIL "B"
(NOT TO SCALE)

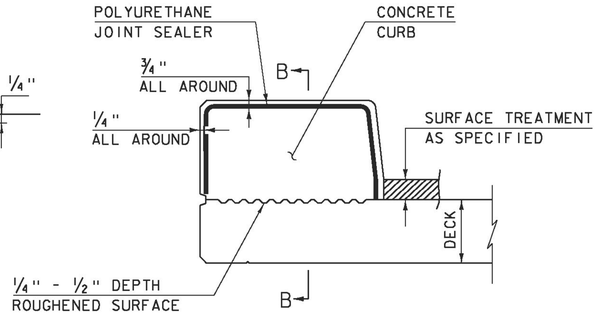

CONCRETE CURB JOINT SECTION
(NOT TO SCALE)

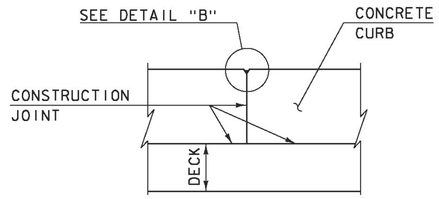

SECTION B - B
(NOT TO SCALE)

1. SEE TYPICAL HORIZONTAL CONSTRUCTION JOINT DETAIL FOR ADDITIONAL INFORMATION

CONCRETE CURB JOINT NOTES

1. CONCRETE CURBS MAY BE PLACED IN ONE CONTINUOUS OPERATION IF AN APPROVED SHRINKAGE REDUCING ADMIXTURE LISTED IN THE SPECIAL PROVISIONS IS USED WITH THE CONCRETE MIX DESIGN. PAYMENT FOR THE SHRINKAGE REDUCING ADMIXTURE WILL BE INCIDENTAL TO THE BRIDGE CURB CONCRETE ITEM.

2. IF THE CONTRACTOR CHOOSES NOT TO USE AN APPROVED SHRINKAGE REDUCING ADMIXTURE, THE CURBS SHALL BE CONSTRUCTED WITH CONSTRUCTION JOINTS SPACED AT A MAXIMUM OF 15'-0" CENTER TO CENTER AND 2'-0" MINIMUM FROM THE CENTER OF NEAREST BRIDGE RAILING POST.

3. ON MULTI-SPAN CONTINUOUS SUPERSTRUCTURES, REGARDLESS OF WHETHER APPROVED SHRINKAGE REDUCING ADMIXTURE IS USED, CURB JOINTS SHALL BE LOCATED OVER THE CENTERLINE OF PIERS AND 7'-0" EACH SIDE OF THE CENTERLINE OF EACH PIER.

4. WHEN CURB JOINTS ARE USED THE CURBS SHALL BE PLACED IN ALTERNATE SECTIONS WITH A MINIMUM OF 48 HOUR DELAY BETWEEN ADJACENT PLACEMENTS.

5. LONGITUDINAL REINFORCING SHALL BE CONTINUOUS THROUGH CURB CONSTRUCTION JOINTS. CURB STIRRUP BARS SHALL BE TURNED AS NECESSARY TO MAINTAIN COVER IN THE FLARED CURB ENDS.

6. THE JOINT SPACING AND DETAILS SHOWN SHALL APPLY TO SIDEWALKS WHEN SHOWN IN THE PLANS.

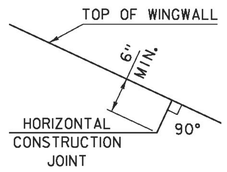

HORIZONTAL WINGWALL CONSTRUCTION JOINT
(NOT TO SCALE)

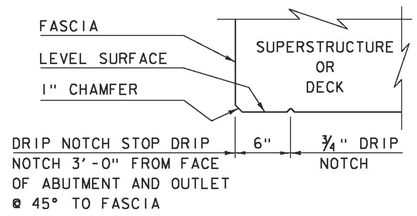

DRIP NOTCH DETAIL
(NOT TO SCALE)

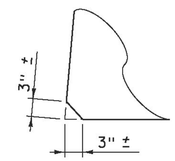

ACUTE ANGLE CLIP DETAIL
(NOT TO SCALE)

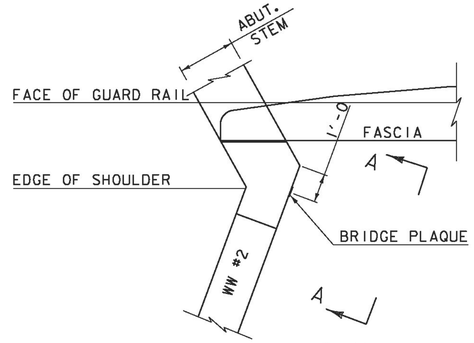

PLAN

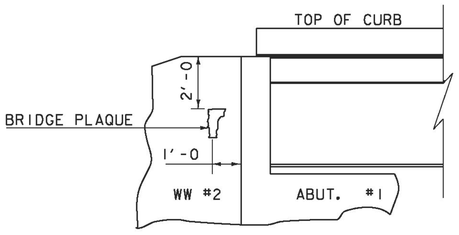

VIEW "A - A"

BRIDGE PLAQUE
(NOT TO SCALE)

THE BRIDGE PLAQUE WILL BE SUPPLIED BY THE AGENCY OF TRANSPORTATION AND SHALL BE INSTALLED BY THE CONTRACTOR AT ABUTMENT #1 ON THE RIGHT SIDE AS SHOWN OR AS DIRECTED BY THE ENGINEER.

PAYMENT FOR INSTALLATION OF THE BRIDGE PLAQUE SHALL BE INCIDENTAL TO THE ADJACENT CONCRETE.

REVISIONS	
MAY 7, 2010	APPROVED FOR USE BY VAOT STRUCTURES SECTION
JUNE 4, 2010	MODIFIED AND ADDED TWO DETAILS
OCTOBER 10, 2012	MODIFIED HORZ. JOINT WINGWALL ADD 6" MIN. DIMENSION

CONCRETE DETAILS AND NOTES

VERMONT AGENCY OF TRANSPORTATION
STRUCTURES - SECTION

STRUCTURES DETAIL
SD-502.00

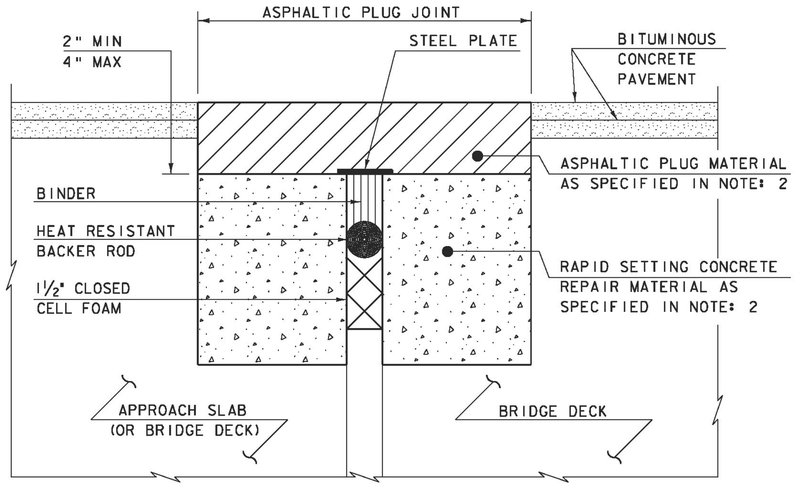

ASPHALTIC PLUG-TYPE JOINT DETAIL - REHAB

(NOT TO SCALE)

NOTES:

1. THE CONTRACTOR SHALL REMOVE ALL ASPHALTIC PLUG JOINT MATERIAL AND DETERIORATED CONCRETE AS DIRECTED BY THE ENGINEER. REMOVAL OF THE FIRST 4 INCHES OF MATERIAL SHALL BE INCLUDED IN THE BID PRICE FOR ITEM 516.10 BRIDGE EXPANSION JOINT, ASPHALTIC PLUG. ANY REMOVAL OF MATERIAL GREATER THAN 4 INCHES SHALL BE INCLUDED IN THE BID PRICE OF ITEM 580.20 RAPID SETTING CONCRETE REPAIR MATERIAL WITH COURSE AGGREGATE.

2. THE CONTRACTOR SHALL REPLACE REMOVED MATERIAL THAT IS LESS THAN 4" FROM FINISHED GRADE WITH ASPHALTIC PLUG JOINT MATERIAL MEETING THE REQUIREMENTS OF SUBSECTION 707.15. ALL REMOVED MATERIAL THAT IS GREATER THAN 4 INCHES FROM FINISHED GRADE SHALL BE REPLACED WITH RAPID SETTING CONCRETE REPAIR MATERIAL WITH COARSE AGGREGATE MEETING THE REQUIREMENTS OF SUBSECTION 780.04.

3. REINFORCING STEEL NOT SHOWN FOR CLARITY.

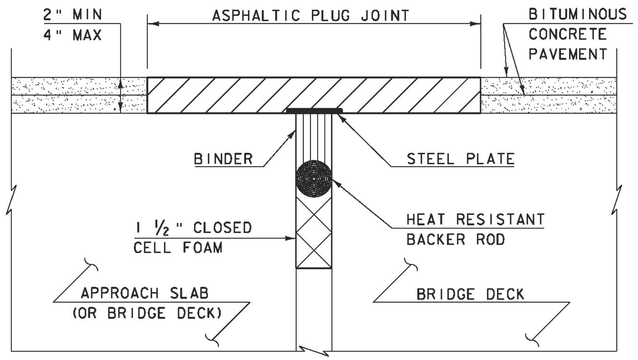

ASPHALTIC PLUG-TYPE JOINT DETAIL - NEW

(NOT TO SCALE)

ASPHALTIC PLUG JOINT NOTES

INSTALLATION:

1. LOCATE THE JOINT CENTRALLY OVER THE DECK OVERLAY EXPANSION GAP OR FIXED JOINT, MARKED OUT TO THE MANUFACTURER'S RECOMMENDED WIDTH.
2. REMOVE THE BITUMINOUS CONCRETE PAVEMENT FULL DEPTH AS SHOWN ON THE PLANS. THE PAVEMENT SHALL BE DRY AND SAW CUT TO THE LIMITS REQUIRED TO PLACE THE JOINT. A PNEUMATIC HAMMER AND CHISEL MAY BE USED ADJACENT TO THE CURB ONLY WHEN SAW CUTTING IS NOT POSSIBLE.
3. BLAST CLEAN THE JOINT AREA OF DEBRIS, ASPHALT AND SHEET MEMBRANE. THOROUGHLY DRY THE JOINT AREA WITH COMPRESSED AIR PRIOR TO APPLYING BINDER MATERIAL.
4. REPAIR MATERIAL GREATER THAN 4 INCHES FROM FINISHED GRADE WITH RAPID SETTING CONCRETE REPAIR MATERIAL WITH COARSE AGGREGATE MEETING THE REQUIREMENTS OF SUBSECTION 780.04.
5. PLACE PROPERLY SIZED HEAT RESISTANT BACKER ROD IN THE MOVEMENT GAP ALLOWING FOR 1" +/- OF BINDER ABOVE THE ROD.
6. HEAT AND PLACE THE BINDER MATERIAL AS RECOMMENDED BY THE MANUFACTURER.
7. PLACE 1/4" THICK BY 8" WIDE SECTIONS OF STEEL PLATE OVER THE CENTER OF THE MOVEMENT GAP. SECURE THE PLATES FROM MOVING BY INSERTING LOCATING PINS THROUGH THE PRE-STAMPED HOLES INTO BACKER ROD AND COVER WITH HOT BINDER. THE STEEL PLATES MAY BE OMITTED WHERE THE ENGINEER DETERMINES THAT THE APPROACH SLAB OR BRIDGE DECK WILL PROVIDE INADEQUATE SUPPORT AND WHERE VERTICAL MOVEMENT OF THE PLATES MIGHT OCCUR.
8. HEAT AND MIX THE BINDER MATERIAL AND AGGREGATE AS RECOMMENDED BY THE MANUFACTURER.
9. INSTALLATION OF MATERIAL, COMPACTION, AND TOP COATING SHALL BE AS RECOMMENDED BY THE MANUFACTURER.
10. IMMEDIATELY AFTER TOP COATING, CAST AN ANTI-SKID MATERIAL OVER THE JOINT TO REDUCE THE RISK OF TRACKING.
11. ONCE THE JOINT REACHES 82 DEG C (180 DEG F) +/-, WATER MAY BE USED TO EXPEDITE THE COOLING PROCESS.
12. PROTECT JOINT FROM TRAFFIC UNTIL THE MATERIAL HAS COOLED TO 51 DEG C (125 DEG F) +/-.

WEATHER LIMITATIONS

APPLY BINDER MATERIAL ONLY WHEN THE FOLLOWING CONDITIONS PREVAIL OR AS RECOMMENDED BY THE MANUFACTURER:

1. THE AMBIENT AIR TEMPERATURE IS AT LEAST 10 DEG C (50 DEG F) AND RISING.
2. THE ROAD SURFACE IS DRY.
3. WEATHER CONDITIONS OR OTHER CONDITIONS ARE FAVORABLE AND ARE EXPECTED TO REMAIN SO FOR THE PERFORMANCE OF SATISFACTORY WORK.

REVISIONS	
MAY 7, 2010	APPROVED FOR USE BY VAOT STRUCTURES SECTION

BRIDGE JOINT
ASPHALTIC PLUG

VERMONT AGENCY OF TRANSPORTATION
STRUCTURES - DIVISION

STRUCTURES DETAIL
SD-516.10

STRUCTURAL STEEL GENERAL NOTES:

1. ALL FIELD CONNECTIONS SHALL BE MADE WITH 7/8" DIAMETER HIGH-STRENGTH BOLTS IN 15/16" DIAMETER HOLES, PER SUBSECTION 506.19, UNLESS OTHERWISE SPECIFIED.
2. ALL HOLES IN THE WEBS OF THE FASCIA GIRDERS THAT ARE NOT OTHERWISE FILLED, SHALL BE FILLED WITH EITHER BUTTON HEAD OR HEX HEAD BOLTS. THESE BOLTS SHALL BE TIGHTENED IN ACCORDANCE WITH SUBSECTION 506.19.
3. ALL WELDING SHALL CONFORM TO THE PROVISIONS OF SUBSECTION 506.10.
4. ANY CONNECTIONS THAT ARE NOT DETAILED ON THE PLANS SHALL BE DETAILED BY THE FABRICATOR AND SUBMITTED TO THE STRUCTURES ENGINEER FOR APPROVAL.
5. STRUCTURAL STEEL MEMBERS DESIGNATED "CVN" IN THE PLANS SHALL BE CHARPY V-NOTCH TESTED IN ACCORDANCE WITH SUBSECTION 714.01 OF THE STANDARD SPECIFICATIONS.
6. ENDS OF GIRDERS ARE TO BE VERTICAL IN THEIR FINAL POSITION.
7. AFTER SUPERSTRUCTURE STEEL HAS BEEN ERECTED, ELEVATIONS ALONG THE TOP OF THE GIRDERS SHALL BE TAKEN AS DIRECTED BY THE RESIDENT ENGINEER FOR USE IN DETERMINING FINISHED GRADES.

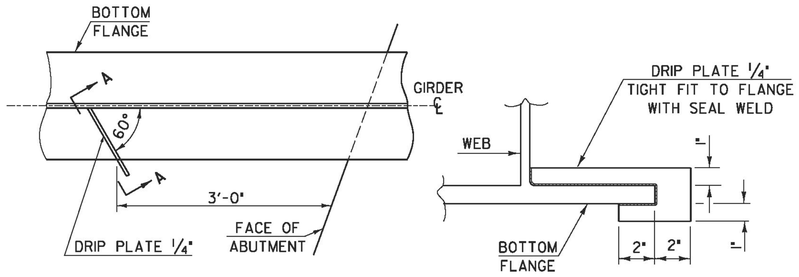

PLAN DRIP PLATE

SECTION A - A

NOTE: DRIP PLATES SHALL BE PLACED ON OUTSIDE EDGE OF FASCIA GIRDERS ON THE HIGH SIDE OF ALL PIERS AND ABUTMENTS OR AS INDICATED ON PROJECT PLANS.

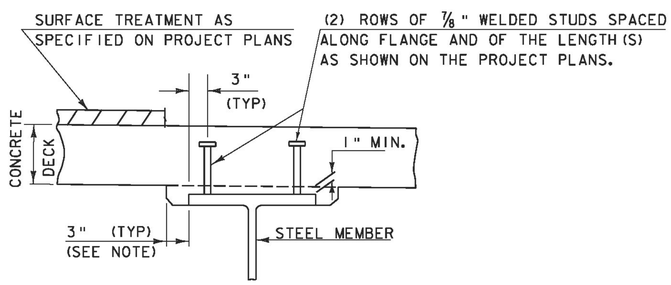

NOTE:
THE 3" HORIZONTAL SECTION MAY BE ELIMINATED FOR FORMING SYSTEMS DESIGNED FOR THE CONSTRUCTION OF VERTICAL HAUNCHES. ANY VOIDS RESULTING FROM FORMING SYSTEM ELEMENTS SHALL BE FILLED WITH JOINT SEALER, POLYURETHANE MEETING THE REQUIREMENTS OF SECTION 524. THE COST OF THE JOINT SEALER, POLYURETHANE SHALL BE INCIDENTAL TO THE ADJACENT CONCRETE.

HAUNCH AND SHEAR CONNECTOR DETAIL

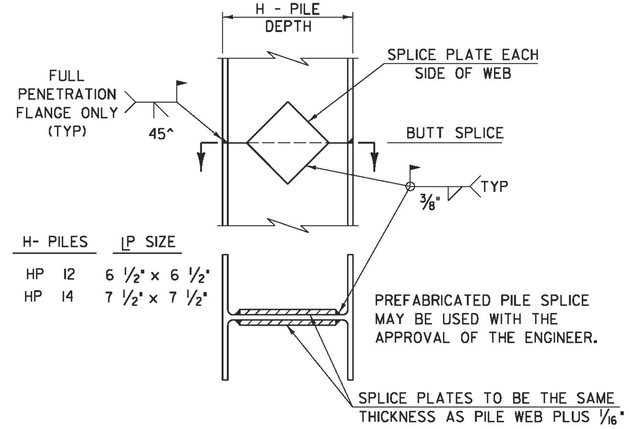

DETAIL OF PILE SPLICE

DETAILS ON THIS SHEET ARE "NOT TO SCALE" UNLESS NOTED OTHERWISE.

REVISIONS	
MAY 7, 2010	APPROVED FOR USE BY VAOT STRUCTURES SECTION
JUNE 4, 2010	MODIFIED NOTES

STRUCTURAL STEEL DETAILS & NOTES

VERMONT AGENCY OF TRANSPORTATION
STRUCTURES - SECTION

STRUCTURES DETAIL
SD-601.00

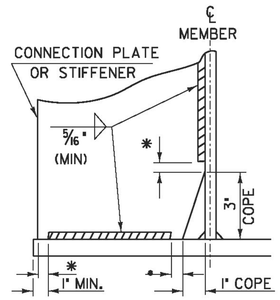

WELD TERMINATION AND COPING DETAILS FOR STEEL MEMBERS

*NO WELD FOR 3/8" MIN. 7/8" MAX. (EXCEPT MUST MAINTAIN 1" MINIMUM FROM EDGE OF FLANGE)

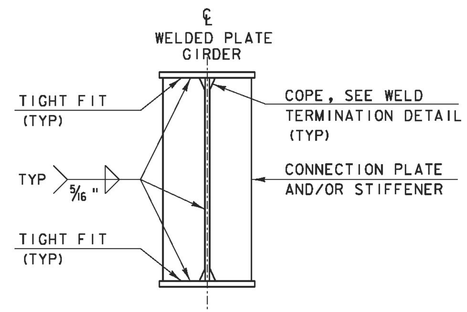

INTERMEDIATE CONNECTION PLATES AND/OR STIFFENERS FOR WELDED PLATE GIRDERS

INTERMEDIATE DETAIL IS ONLY USED WHEN PLATE DOES NOT OCCUR AT AN ABUTMENT OR PIER.

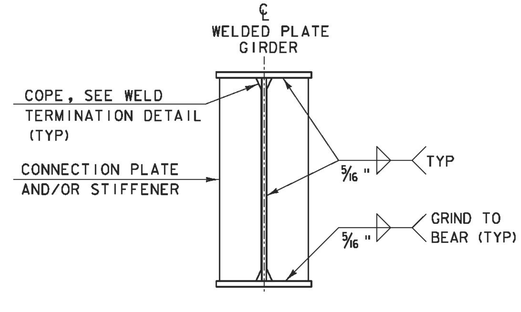

ABUTMENT BEARING STIFFENERS AND/OR CONNECTION PLATES FOR WELDED PLATE GIRDERS

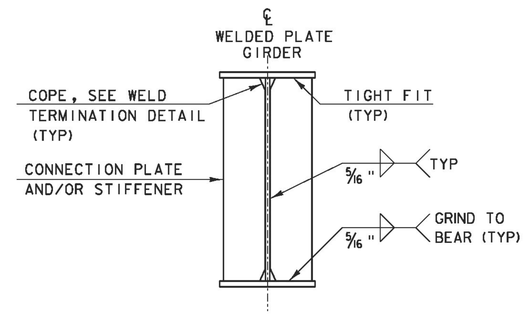

PIER BEARING STIFFENERS AND/OR CONNECTION PLATES FOR WELDED PLATE GIRDERS

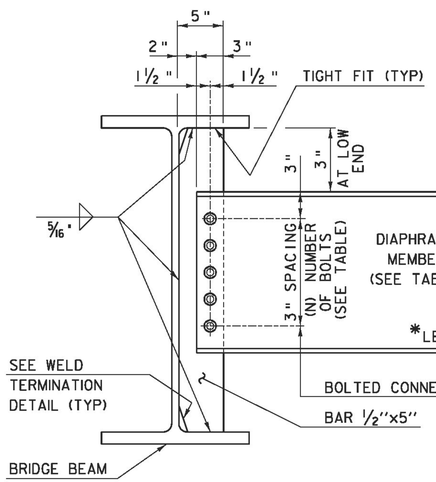

DEPTH		DIAPHRAGM MEMBER	(N) BOLTS
ROLLED BEAM	24" 30"	C15x33.9	4
	31" 36"	MC18x42.7	5
	37" 42"	W21x44	6
PLATE GIRDER WEB	31" 36"	W27x84	7
	37" 42"	W33x118	9
	43" 48"	W36x135	10

INTERMEDIATE DIAPHRAGMS FOR 24" TO 48" BRIDGE BEAMS

* IF CLEARANCE CANNOT BE MET, DIAPHRAGM MAY BE SLOPED.

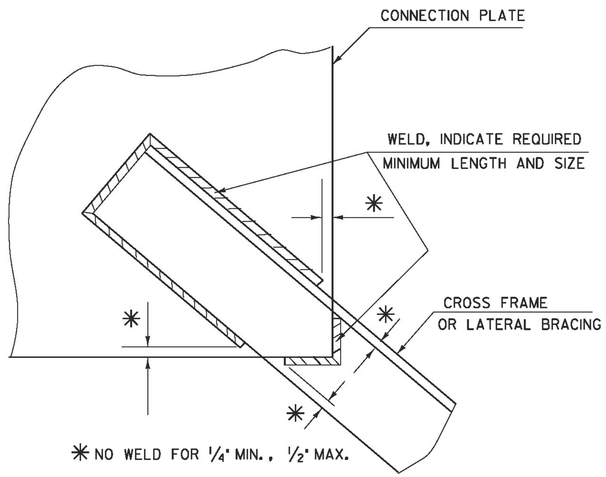

WELD LOCATION DETAIL AT CROSS FRAMES AND LATERAL BRACING

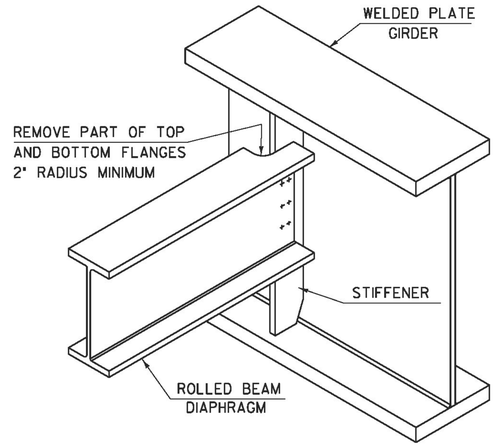

SEE CONTRACT DRAWINGS FOR SIZES OF MEMBERS AND CONNECTION DETAILS

ROLLED BEAM USED AS DIAPHRAGM

DETAILS ON THIS SHEET ARE "NOT TO SCALE" UNLESS NOTED OTHERWISE.

REVISIONS	
MAY 7, 2010	APPROVED FOR USE BY VAOT STRUCTURES SECTION
MAY 2, 2011	ADD INTERMEDIATE DIAPHRAGMS DETAIL & ADD NOT TO SCALE NOTE

STRUCTURAL STEEL PLATE GIRDER DETAILS AND NOTES

VERMONT AGENCY OF TRANSPORTATION
STRUCTURES - SECTION

STRUCTURES DETAIL
SD-602.00

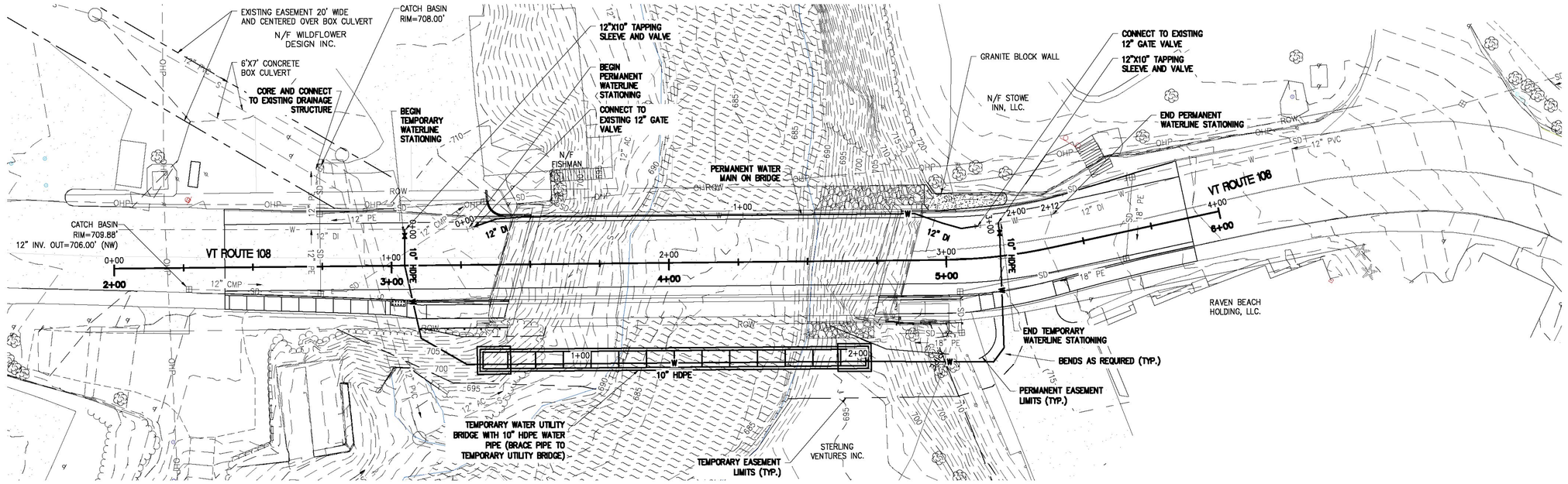

PLAN
SCALE: 1"=20'

GRAPHIC SCALE

20 0 10 20 40 80

(IN FEET)

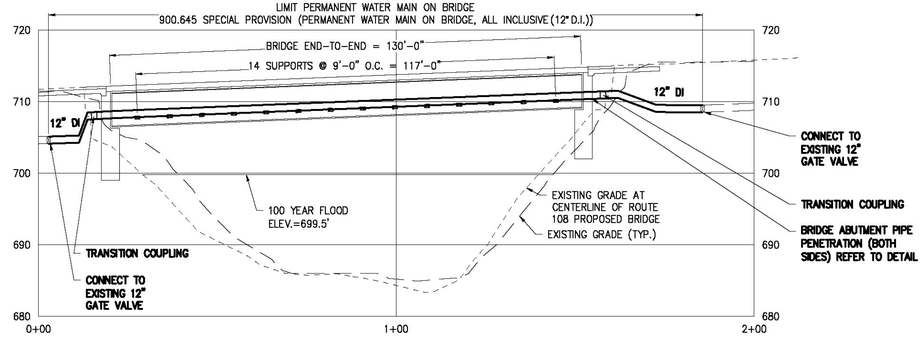

12" DI WATERLINE RELOCATION PROFILE (WEST SIDE)

SCALE: HORIZ. 1"=20'
VERT. 1"=10'

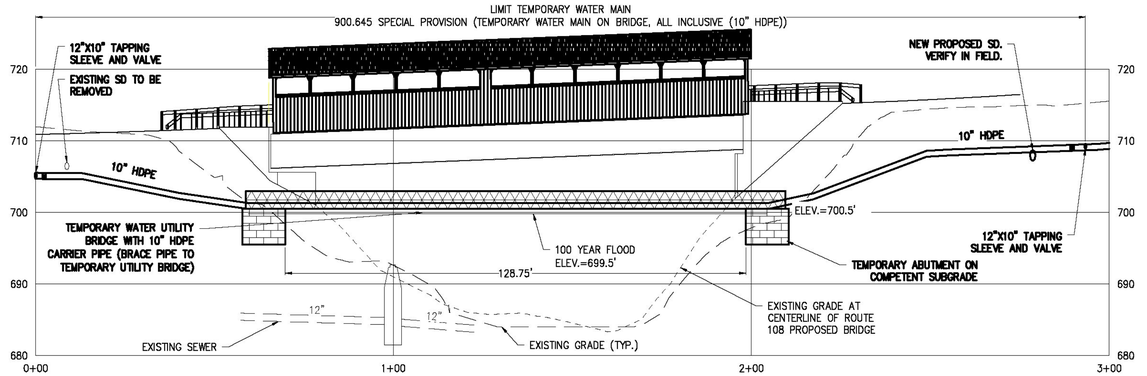

10" HDPE TEMPORARY WATER PROFILE (EAST SIDE)

SCALE: HORIZ. 1"=20'
VERT. 1"=10'

NOTES:

1. TEMPORARY WATERLINE BRIDGE AND ABUTMENTS ARE DESIGNED BY TEMPORARY BRIDGE MANUFACTURER.
2. AFTER TEMPORARY WATER LINE IS IN SERVICE, THE EXISTING 12" GATE VALVES SHALL BE CLOSED PRIOR TO REMOVAL OF EXISTING WATER LINE ON BRIDGE. EXISTING GATE VALVES ON BOTH SIDES OF BRIDGE SHALL BE TEMPORARILY RESTRAINED AFTER REMOVAL OF THE EXISTING WATER LINE ON THE BRIDGE.
3. TEMPORARY WATER LINE SHALL BE LEFT EMPTY FOR WINTER, THEN FILLED AND TESTED IN SPRING PRIOR TO PLACING IN SERVICE.
4. ALL BURIED FITTINGS SHALL HAVE MECHANICAL JOINT RESTRAINTS. REFER TO THE SPECIAL PROVISIONS.
5. THE TEMPORARY WATER LINE SHALL BE CAPPED AND RESTRAINED AT EACH VALVE AFTER THE NEW WATER LINE IS IN SERVICE.

Aldrich + Elliott
WATER RESOURCE ENGINEERS
6 Market Place, Suite 2
Essex Jct., VT 05452
P: 802.879.7733
AEengineers.com

STATE OF VERMONT
JASON R. BOOTH
No. 9235
Civil
LICENSED PROFESSIONAL ENGINEER

No.	DATE	DESCRIPTION	CHECKED

TOWN OF STOWE, VERMONT

BRIDGE STREET BRIDGE UTILITY REPLACEMENT BRF 0235 (II)

12" WATERLINE RELOCATION AND 10" TEMPORARY WATER PLAN AND PROFILE

DESIGNED: CM	PROJECT NO.: 14012
DRAWN: JEN	DRAWING
CHECKED: JAB	
DATE: MAY, 2014	

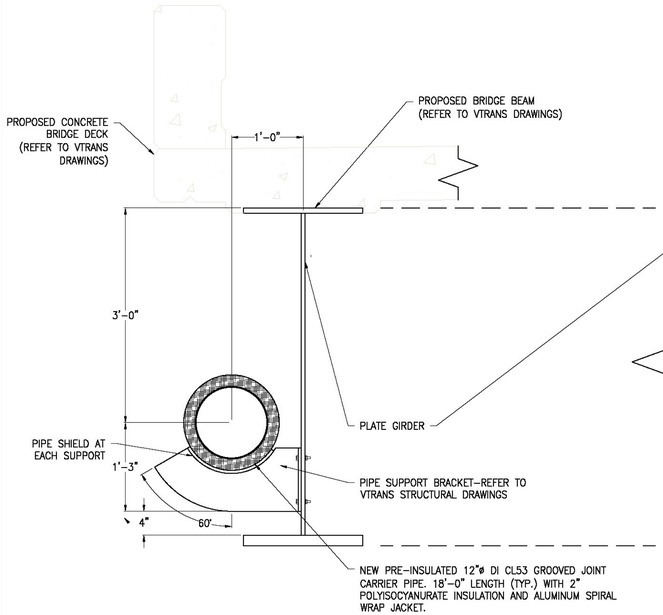

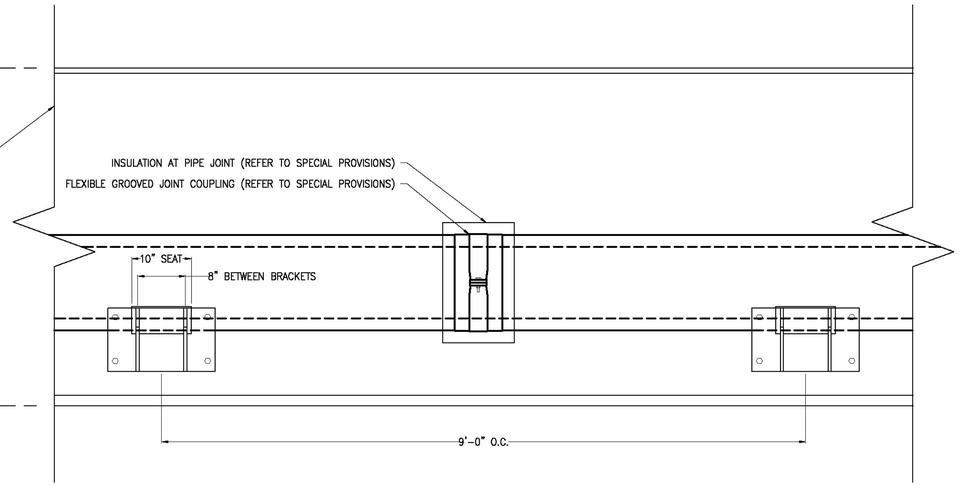

NOTES:
1. BRACKETS SHALL BE PER THE DETAILS ON THE VTRANS STRUCTURAL DRAWINGS.

STEEL BEAM PIPE SUPPORT SECTION
SCALE: 1"=1'-0"

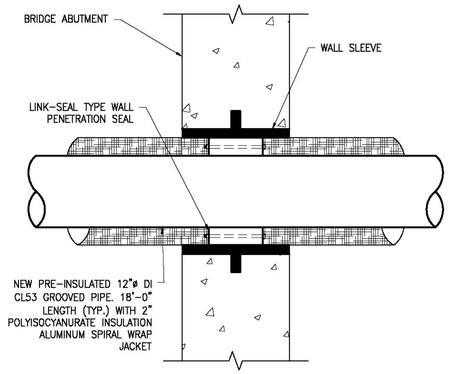

BRIDGE ABUTMENT PIPE PENETRATION DETAIL
SCALE: 1-1/2"=1'-0"

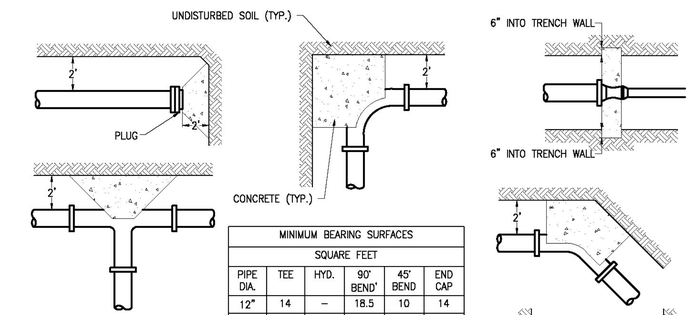

MINIMUM BEARING SURFACES					
SQUARE FEET					
PIPE DIA.	TEE	HYD.	90° BEND'	45° BEND	END CAP
12"	14	–	18.5	10	14
10"	14	–	17	10	14

NOTES:
1. THRUST BLOCKS SHALL BE PROVIDED AT ALL WATERLINE TEES, HYDRANTS, 90° AND 45° BENDS, REDUCERS, AND END CAPS.
2. ALL THRUST BLOCKS SHALL BE CLASS "B" CONCRETE. SEE SPEC SECTION 541.
3. CONCRETE SHALL BE PLACED SO AS NOT TO HAMPER THE FUTURE REMOVAL OF A FITTING.
4. ALL FITTINGS ARE TO BE WRAPPED WITH POLYETHYLENE.

TYPICAL THRUST BLOCK DETAILS
SCALE: NONE

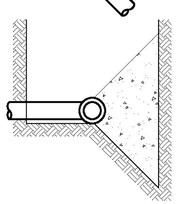

TYPICAL SECTION
SCALE: NONE

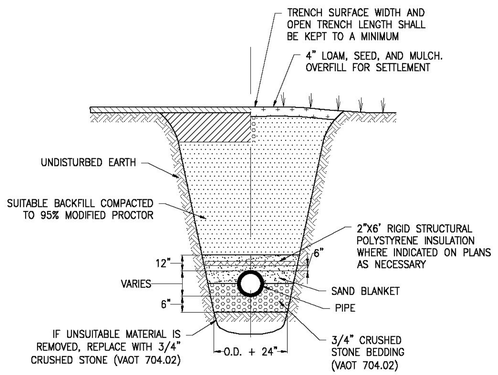

NOTES:
1. NO MECHANICAL TAMPERS SHALL BE USED DIRECTLY OVER PIPE TO INSURE PIPE IS NOT DAMAGED.
2. COMPACTION OF BACKFILL SHALL MEET A MINIMUM 95% STANDARD PROCTOR.
3. BEDDING TO PROVIDE A FIRM, STABLE, CONTINUOUS AND UNIFORM SUPPORT FOR THE FULL LENGTH OF PIPE.

TYPICAL WATERLINE TRENCH DETAIL
SCALE: NONE

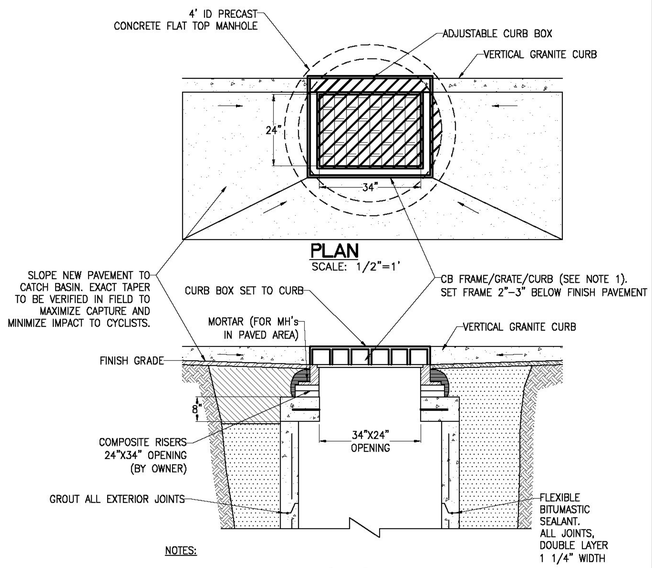

PLAN
SCALE: 1/2"=1'

NOTES:
1. PROVIDE CATCH BASIN FRAME/GRATE/CURB BY EAST JORDAN IRON WORKS, FRAME-7510Z1, GRATE-7510M3, BACK CURB GRATE-7030T4, NEENAH STYLE, OR EQUAL.

TYPICAL CATCH BASIN DETAIL
SCALE: 1/2"=1'-0"

Aldrich + Elliott
WATER RESOURCE ENGINEERS
6 Market Place, Suite 2
Essex Jct., VT 05452
P: 802.879.7733
AEengineers.com

STATE OF VERMONT
JASON R. BOOTH
No. 9235
Civil
LICENSED PROFESSIONAL ENGINEER

No.	DATE	DESCRIPTION	CHECKED

TOWN OF STOWE, VERMONT

BRIDGE STREET BRIDGE UTILITY REPLACEMENT BRF 0235 (II)

WATER AND STORM DRAIN DETAILS

DESIGNED	PROJECT NO.
CM	14012
DRAWN	DRAWING
JEN	
CHECKED	
JAB	
DATE	
MAY, 2014	

Y:\14012-STOWE BRIDGE UTILITY\14012-3.dwg, 7/24/2014 11:56:33 AM

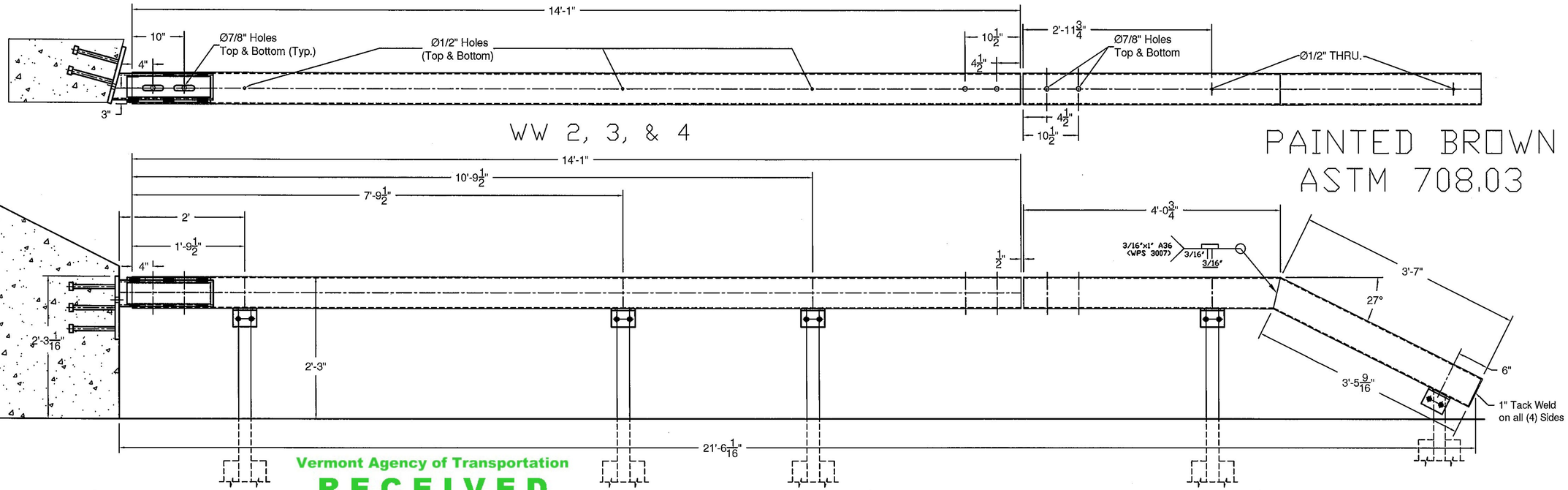

Vermont Agency of Transportation
RECEIVED
FRL-Stowe-9.pdf
CK'D BY D. PETERSON OK'D BY C. CARLSON
January 20, 2015
RESUBMIT NO Approved AsNoted
BY C. CARLSON DATE 01/23/2015

PART IS SYMETRICAL

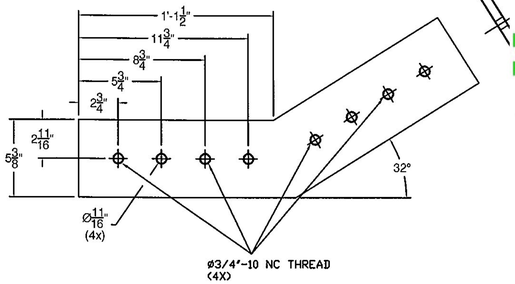

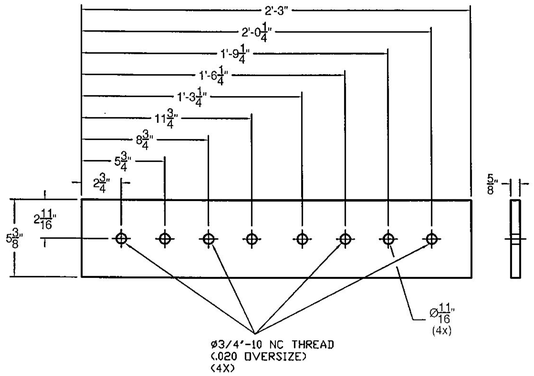

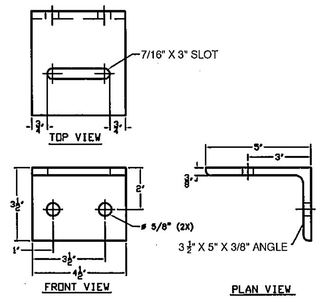

(ITEM # 6)

PLAN VIEW

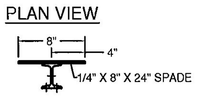

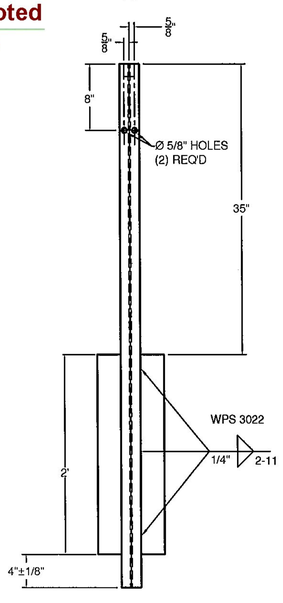

FRONT (ITEM # 3)

STANDARD POST DETAIL

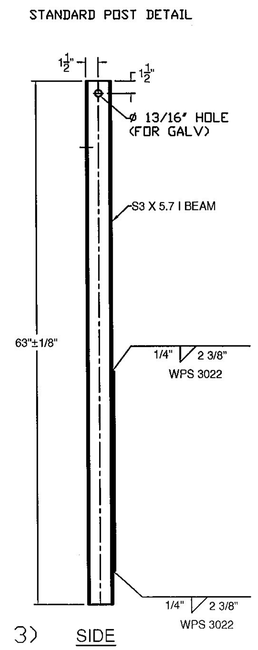

SIDE

BILL OF MATERIAL

ITEM #	QTY	PART #	DESCRIPTION	ASTM DESIGNATION
1	3	0033.91356	6' X 6' X 3/16' BOX BEAM @ 14'-1" W/ END MITER	A500 Gr. B
1A	1	0033.91357	6' X 6' X 3/16' BOX BEAM @ 14'-1" W/ 6' PARTIAL RADIUS & END MITER	A500 Gr. B
2	2	0054.01001	6' X 6' X 3/16' END SECTION	A500 Gr. B
2A	2	0054.01001T	6' X 6' X 3/16' END SECTION W/ END MITER	A500 Gr. B
3	16	0013.57021	S3 X 5.7 POST, PUNCH 8' W/SPD @ 63" LG	A572 Gr. 50
4	4	0013.57060	S3 X 5.7 END POST, W/SPD @ 3'-8" LG	A572 Gr. 50
5	3 PR.	0054.00100	5/8" X 5 3/8" INTERNAL SPLICE PLATE @ 2'-3"	A709
5A	1 PR.	0054.00132	5/8" X 5 3/8" INTERNAL SPLICE PLATE W/ 32° ANGLE	A709
6	20	0054.00050	L5" X 3 1/2" X 3/8" RAILING ANGLE	A36
7	8	0080.06340	Ø 3/4" X 7-1/2" HEX BOLT, NUT, & (2) F.W.	A325, A563 DH, & F436
8	20	0080.06140	Ø 3/4" X 2-3/4" HEX BOLT, NUT, (2) F.W., & L.W.	A325, A563 DH, F436, & ASME B18.21.1
9	20	0080.03355	Ø 3/8" X 7 1/2" BOLT, NUT, & 2 FW	A307
10	32	0080.06005	Ø 3/4" X 1 1/2" BOLT, & FW	A325

ITEM 1, 2, & 5 - WW 2, 3, & 4
ITEM 1A, 2A & 5A - WW 1

NOTES:
1. ALL WORK AND MATERIALS SHALL CONFORM TO SECTION 525.
2. PRIOR TO GALVANIZING THE ASSEMBLED POST, GRIND ALL EDGES TO A MINIMUM RADIUS OF 1/16".
3. ALL POSTS SHALL BE SET NORMAL TO GRADE.
4. BOLTS SHALL BE TORQUED SNUG TIGHT (APPROXIMATELY 100 FT-LB).
5. BRIDGE RAILING SHALL HAVE A RUBBED FINISH IN ACCORDANCE WITH SECTION 501.
6. HOLES FOR MOUNTING DELINEATORS TO BE FIELD DRILLED. HOLES SHALL BE COATED WITH AN APPROVED ZINC-RICH PAINT PRIOR TO INSTALLATION.
7. ALL STEEL COMPONENTS OF BRIDGE RAILING AND BOX BEAM GUARDRAIL, INCLUDING THE RAIL CONNECTION TO THE BRIDGE RAIL SHALL BE GALVANIZED IN ACCORDANCE WITH THE STANDARD SPECIFICATIONS AND SURFACE PREPARED FOR PAINTING IN ACCORDANCE WITH ASTM D 6386. COMPONENTS SHALL BE PAINTED BROWN IN ACCORDANCE WITH SUBSECTION 709.03.

ITEM #: 621.30

SHEET 1 OF 2

STRUCTURAL STEEL TO COMPLY W/ ASTM A6

TOLERANCE UNLESS OTHERWISE NOTED:
FRACTIONS = ± 1/16"
ANGLES = ± 1/2°
DIAMETERS = ± 1/32"

BOX BEAM GUIDE RAIL

PROJECT: STOWE BRF 0235 (11), VT. RT. 108, MAJOR COLLECTOR, BRIDGE #2
TOWN OF STOWE, LAMOILLE COUNTY

R E V	NO.	DATE	DESCRIPTION	BY

R E V	NO.	DATE	DESCRIPTION	BY

ELDERLEE, INC.
OAKS CORNERS, NEW YORK 14518
E-Mail: dlong@elderlee.com / epeek@elderlee.com
Tel: 315-789-6670 Fax: 315-789-6615

AISC CERTIFIED FABRICATOR

DRAWN	E.P.	1/13/15
CHECKED	D.L.	1/15/15
APPROVED		
SCALE	SCHEMATIC	
DRAWING NO.	FR L - STOWE-BB	

0054.01001 w/16 degree miter

Vermont Agency of Transportation

RECEIVED

FRL-Stowe-0.pdf

CK'D BY D. PETERSON OK'D BY C. CARLSON

January 20, 2015

RESUBMIT NO Approved

BY C. CARLSON DATE 01/23/2015

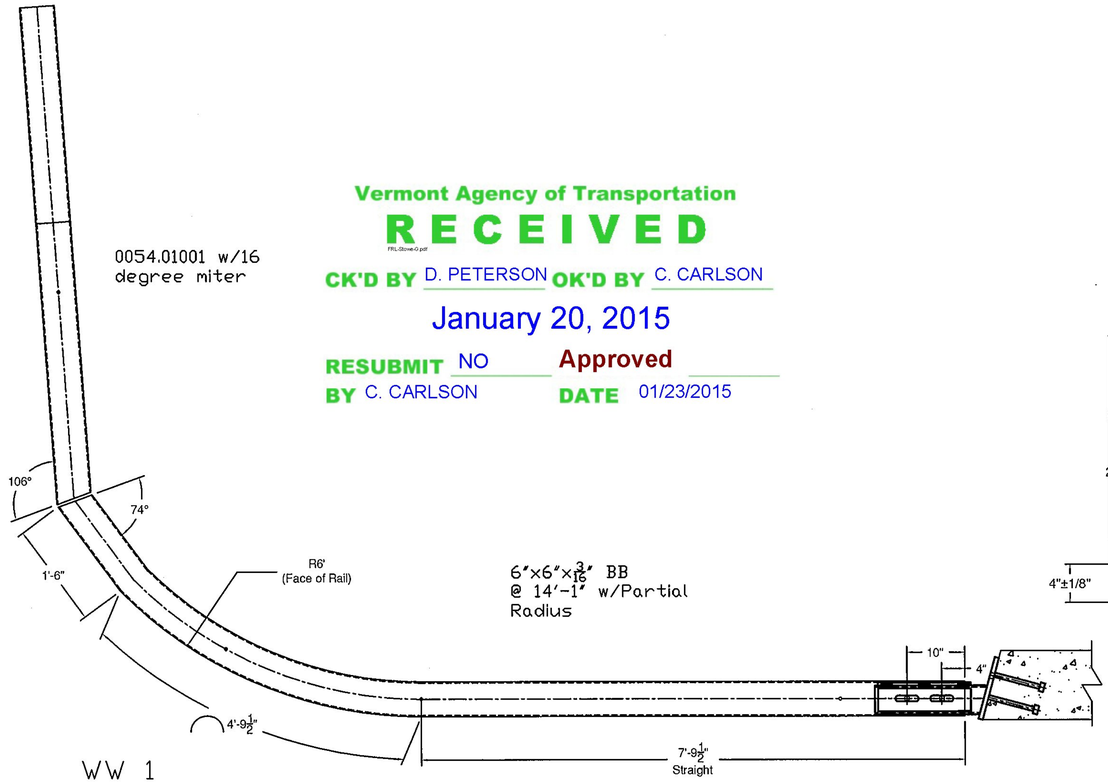

6"x6"x3/16" BB @ 14'-1" w/Partial Radius

WW 1

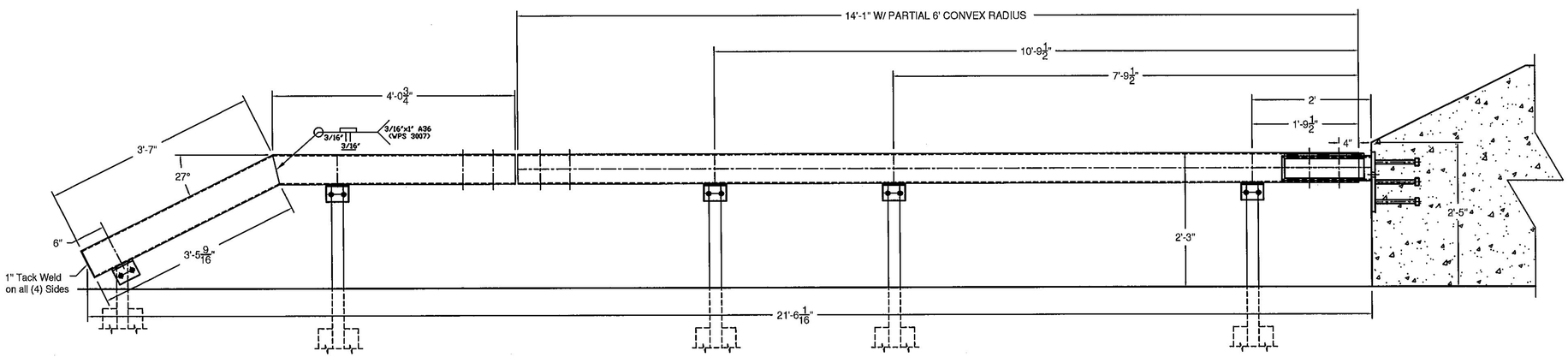

PLAN VIEW

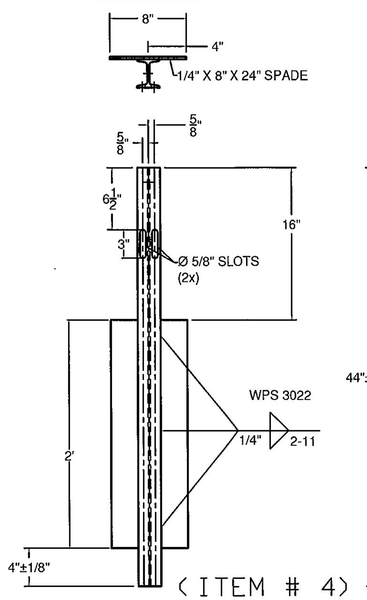

END POST DETAIL

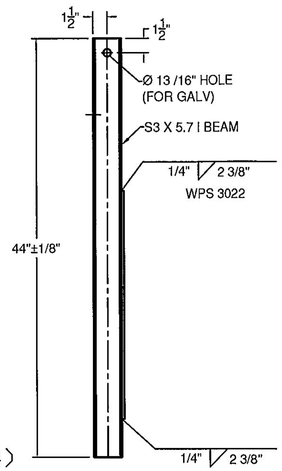

(ITEM # 4)

FRONT SIDE

ITEM #: 621.30

SHEET 2 OF 2

STRUCTURAL STEEL TO COMPLY W/ ASTM A6

TOLERANCE UNLESS OTHERWISE NOTED:
FRACTIONS = ± 1/16"
ANGLES = ± 1/2°
DIAMETERS = ± 1/32"

BOX BEAM GUIDE RAIL

PROJECT: STOWE BRF 0235 (11), VT. RT. 108, MAJOR COLLECTOR, BRIDGE #2
TOWN OF STOWE, LAMOILLE COUNTY

REV	NO.	DATE	DESCRIPTION	BY

REV	NO.	DATE	DESCRIPTION	BY

ELDERLEE, INC.
OAKS CORNERS, NEW YORK 14518
E-Mail: dlong@elderlee.com / epeek@elderlee.com
Tel: 315-789-6670 Fax: 315-789-6615

CERTIFIED FABRICATOR

DRAWN	E.P.	1/13/15
CHECKED	D.L.	1/15/15
APPROVED	.	.
SCALE	SCHEMATIC	
DRAWING NO.	FR L - STOWE-BB	

WELDING PROCEDURE SPECIFICATION

PQR ELDERLEE#3

Material Specification	A500 GR B to A572 GR 50
Welding Process	FCAW-G
Manual or Machine	SEMAUTOMATIC
Position of Welding	FLAT/HORIZONTAL
Filler Metal Specification	A5.29
Filler Metal Classification	E81T1-Ni1C-JH4
Flux	N/A
Shielding Gas	CO 2 Dew Point -40DEG F Flow Rate 50CFH
Single or Multiple Pass	SINGLE
Single or Multiple Arc	SINGLE
Welding Current	DC
Polarity	REVERSE ELECTRODE POSITIVE
Welding Progression	STRINGER
Root Treatment	PER D1.5
Preheat and Interpass Temperature	PER D1.5
Postheat Temperature	NONE
Heat Input	Min _____ Max _____

WELDING PROCEDURE

Pass no.	Electrode size	Welding Current Amperes	Welding Current Volts	Travel speed	Joint detail
1	1/16	310	25	11	
Variable	LIMITS	341 TO 269	27 TO 23	12 TO 10	

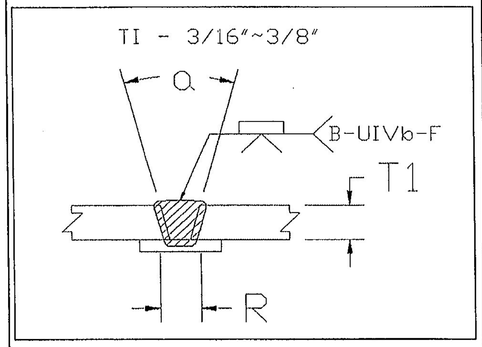

This procedure may vary due to fabrication sequence, fit-up, pass size, etc., within the limitation of variables given in Section 5.

Procedure No. 3007
Revision No. _____

Contractor Elderlee, Inc.
Authorized By RANDY SCOTT
Date 7/28/2014

Vermont Agency of Transportation

RECEIVED

FRL-Stowe-0.pdf

CK'D BY JWC OK'D BY D. PETERSON

January 20, 2015

RESUBMIT NO Approved

BY C. CARLSON DATE 01/23/2015

WELDING PROCEDURE SPECIFICATION

Material Specification	A572 GR 50
Welding Process	GMAW
Manual or Machine	SEMIAUTOMATIC/ROBOTIC
Position of Welding	FLAT/HORIZONTAL
Filler Metal Specification	A5.18
Filler Metal Classification	L-56 LINCOLN
Flux	N/A
Shielding Gas	90% ARGON /10% CO2 Dew Point -40DEG F Flow Rate 45CFH
Single or Multiple Pass	SINGLE
Single or Multiple Arc	SINGLE
Welding Current	DC
Polarity	REVERSE
Welding Progression	STRINGER
Root Treatment	PER D1.5
Preheat and Interpass Temperature	PER D1.5
Postheat Temperature	NONE
Heat Input	Min _____ Max _____

WELDING PROCEDURE

Pass no.	Electrode size	Welding Current Amperes	Welding Current Volts	Travel speed	Joint detail
	.045	190	22	19	
Variable	LIMITS	171 TO 209	20 TO 24	17 TO 21	

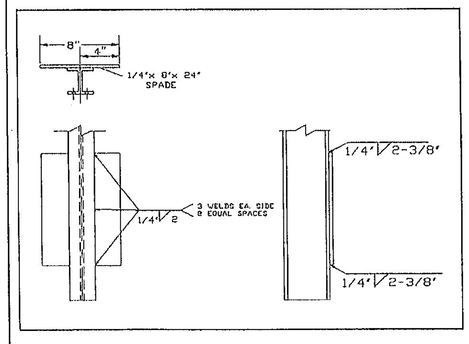

This procedure may vary due to fabrication sequence, fit-up, pass size, etc., within the limitation of variables given in Section 5.

Procedure No. 3022
Revision No. _____

Contractor Elderlee, Inc.
Authorized By RANDY SCOTT
Date 3/20/2014

Vermont Agency of Transportation

RECEIVED

FRL-Steve-0.pdf

CK'D BY JWC OK'D BY D. PETERSON

January 20, 2015

RESUBMIT NO **Approved**

BY C. CARLSON DATE 01/23/2015

S.D. Ireland Companies

Precast Division

193 Industrial Ave. Williston, VT 05495
P.O. Box 2286 South Burlington, VT 05407
p: 802-863-6222 f: 802-860-1528
www.sdireland.com

Attention:	Brian Richardson	Date:	1/12/2015
Company:	C.C.S. Constructors	Job Name:	Stowe BRF 0235(11)
Address:	138 Munson Ave	Job Number:	#15163
City, St, Zip:	Morrisville, VT 05661	Regarding:	Approach Slab Submittal #2
Ph: / Fax:	802-888-7701		

WE ARE SENDING:
- [ ] Quote
- [x] Details
- [ ] Other: _____
- [x] Submittals
- [ ] Prints
- [ ] Plans
- [ ] Specifications
- [ ] Copy Of Letter
- [ ] Change Order
- [ ] Samples
- [ ] Revised Submittals

Copies	Date	Pages	Description
1	1/12/2015	1	Transmittal Cover Page
1	1/7/2015	5	S.D.I. Approach Slab Drawings
1	1/12/2015	2	Dimension Fabricators Reinforcement Drawings
1	4/17/2014	1	State Concrete Mix Design
1		1	Oxford Lift System Sheet
1		2	Grace Chemical Surface Retarder Sheet

These Are Submitted as Checked Below:
- [ ] For Approval
- [ ] Approved as Submitted
- [x] Resubmit __ Copies for Approval
- [x] For Your Use
- [ ] Approved as Noted
- [ ] Submit__ Copies for Distribution
- [ ] As Requested
- [ ] Returned for Corrections
- [ ] Return __ Corrected Prints
- [ ] For Review and Comment
- [ ] Prints Returned After Loan to Us
- [ ] For Bids Due: _____
- [ ] Other: _____

Notes/Remarks:

Brian,

Please pass on to the state for approvals. I still need to know the block out dimensions needed in approach slab #1 for the water main. All longitudinal bars required for the closure poor are to be provided and instaled by CCS, as stated in our proposal.

Let me know if you have any questions.

Thank you.

Eric Barendse x265

Copy To: _____

Signed: Eric Barendse

If enclosures are not as noted, kindly notify us at once.

Precast Approach Slabs

Stowe BRF 0235 (II)

Concrete:

Mix Designation: P50TER

1. Specified Mix Design - 5000 PSI
2. Proposed Mix Design - 6000 PSI
3. Striping Strength - 4250 PSI
4. Handling Strength - 4250 PSI
5. Shipping Strength - 5000 PSI
6. Install Strength - 5000 PSI
7. Traffic Loading - 5000 PSI

Fabrication Tolerances:

1. Width ±1/4"
2. Height ±1/4"
3. Length ±1/2"
4. Rebar Cover 3" Min. (Unless Noted Otherwise)
5. Rebar Spacing ±1"
6. Rebar Clearance ±1/4"
7. Insert Placement ±1/4"

Approch Slab Finish:

1. Top surface to be smooth float finish

Reinforcing:

General Notes:

1. Reinforcing Steel - ASTM A615, Grade 60, Level II, Dual Coated
2. Materials and Manufacturing shall conform to ASTM C1433
3. Bar tied at every intersection for all perimeter bars and every other intersection for all other bars.

Tolerances:

1. Spacing ±1"
2. Clearance ±1/4"

Lap Lengths:

1. Per AASHTO 5.11.2.1.1 & 5.11.5.3.1
   Lap Length for Level II (Dual Coated):
   #4 Bar=17"
   #5 Bar=31"
   #6 Bar=39"
   #7 Bar=53"
   #8 Bar=69"

Vermont Agency of Transportation

RECEIVED

Approach Slab Submittal 20151215_Markup.pdf

CK'D BY CLB OK'D BY DRP

January 13, 2015

RESUBMIT NO Approved

BY C. CARLSON DATE 01/15/15

CONTRACTORS VTSPE:	Rev.	Date	By	Description
	1	1/7/15	PMT	Changes per review

PRECAST CONCRETE APPROACH SLAB SHOP DRAWINGS (SDI JOB #15163)

SUPERVISOR: M. WHEELER
DETAILER: I. ADAMS
CHECKER: E. Barendse
ENGINEER:

PROJECT NAME: Stowe BRF 0235 (II)
PROJECT #: 0235 (II)
LOCATION: Stowe, VT

INSTALLER: CCS Construction, 138 Munson Ave, Morrisville, VT 05661, PH: 802-888-7701

FABRICATOR: 193 INDUSTRIAL AVE. WILLISTON, VT 05495 Ph: (802) 658-0201 SD Ireland Precast Division

1/9/15 | Text | 1 of 4

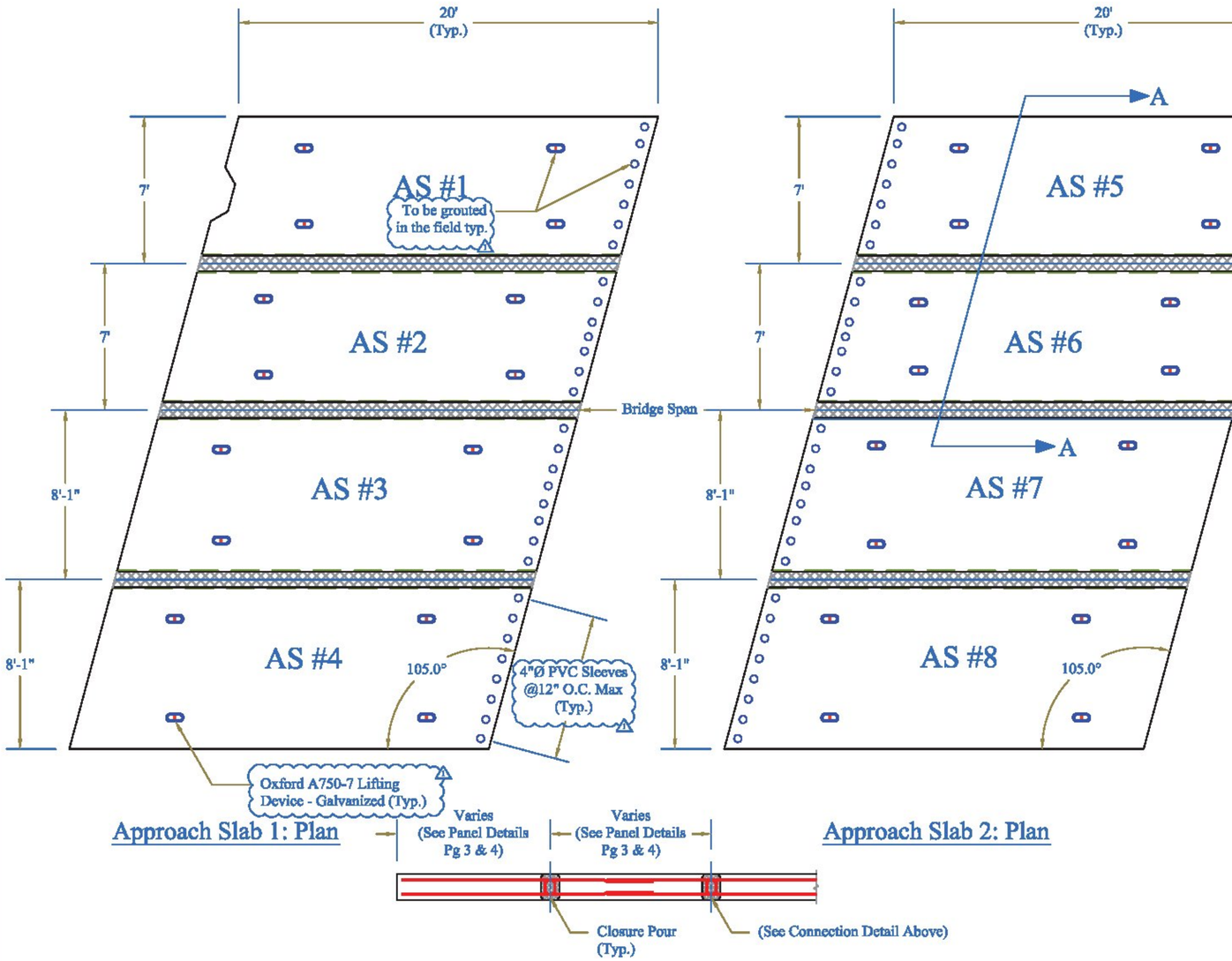

Approach Slab 1: Plan

Approach Slab 2: Plan

Section A-A

Surfaces in closure pours to be treated with retarder and power washed to create roughened surface prior to shipping

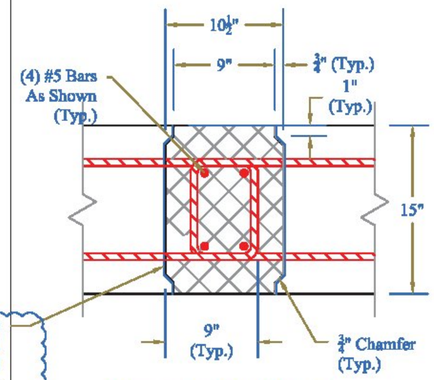

Connection Detail Section

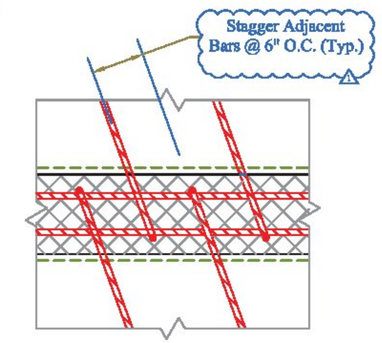

Connection Detail Plan

Table of Pieces

Name	Qty	Thickness	Vol (Cu Yd)	Wt (lbs)
As#1	1	1'-3"	6.07	24,300
As#2	1	1'-3"	5.79	23,200
As#3	1	1'-3"	6.79	27,200
As#4	1	1'-3"	7.14	28,600
As#5	1	1'-3"	6.13	24,500
As#6	1	1'-3"	5.79	23,200
As#7	1	1'-3"	6.79	27,200
As#8	1	1'-3"	7.14	28,600

Vermont Agency of Transportation

RECEIVED

Approach Slab Submittal 20151215_Markup.pdf

CK'D BY CLB OK'D BY DRP

January 13, 2015

RESUBMIT NO Approved

BY C. CARLSON DATE 01/15/15

PRECAST CONCRETE APPROACH SLAB SHOP DRAWINGS (SDI JOB #15163)

SUPERVISOR: M. WHEELER
DETAILER: I. ADAMS
CHECKER: E. Barendse
ENGINEER:

PROJECT NAME: Stowe BRF 0235 (II)
PROJECT #: 0235 (II)
LOCATION: Stowe, VT

INSTALLER: CCS Construction, 138 Munson Ave, Morrisville, VT 05661, PH: 802-888-7701

FABRICATOR: 193 INDUSTRIAL AVE. WILLISTON, VT 05495, Ph: (802) 658-0201

SD Ireland Precast Division

11/20/14 | Plan | 2 of 4

Per email, blockout dimensions will follow contract plan dimensions which are the same as below. Ensure additional dimension provides clearance for box.

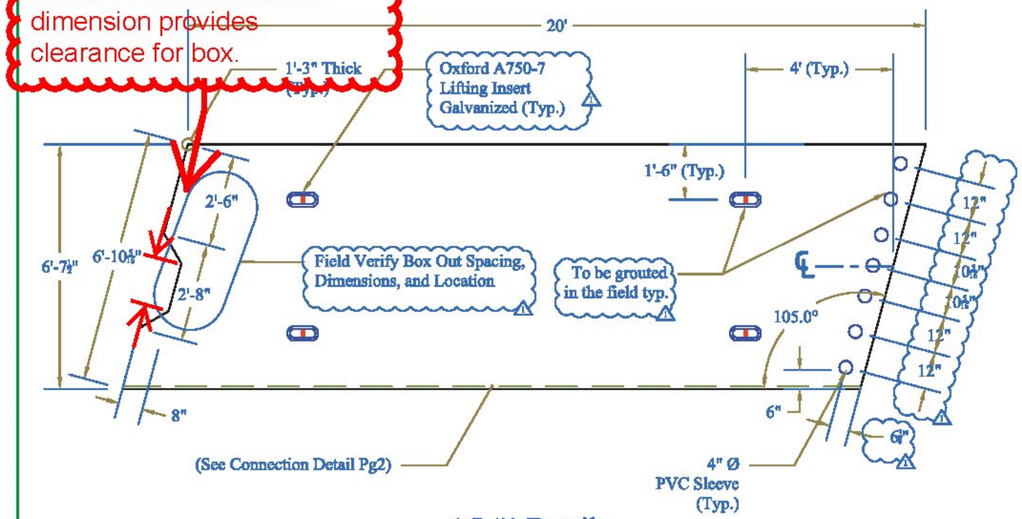

AS #1 Details

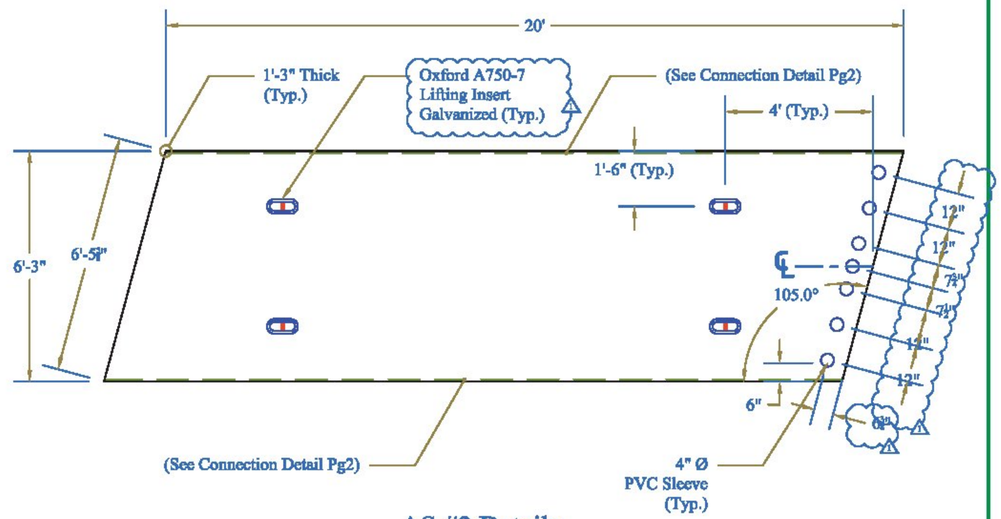

AS #2 Details

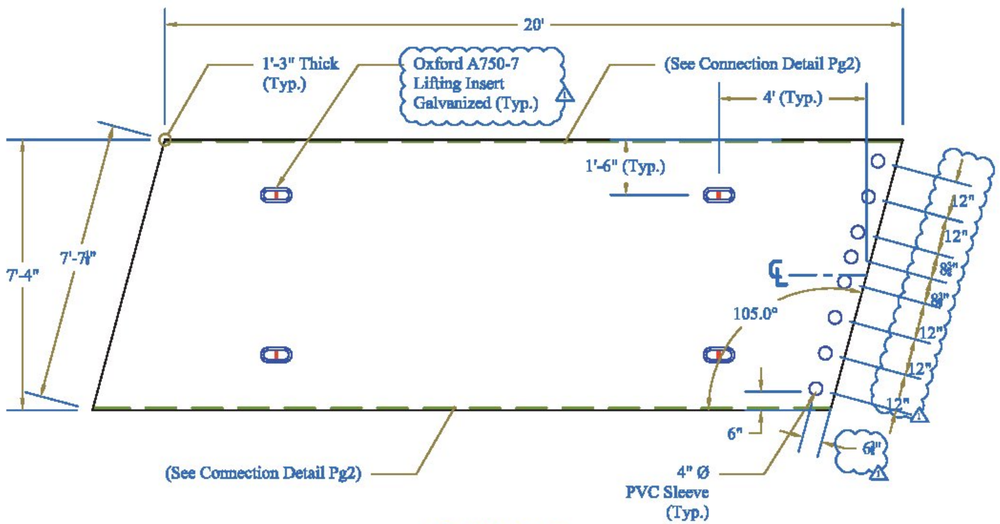

AS #3 Details

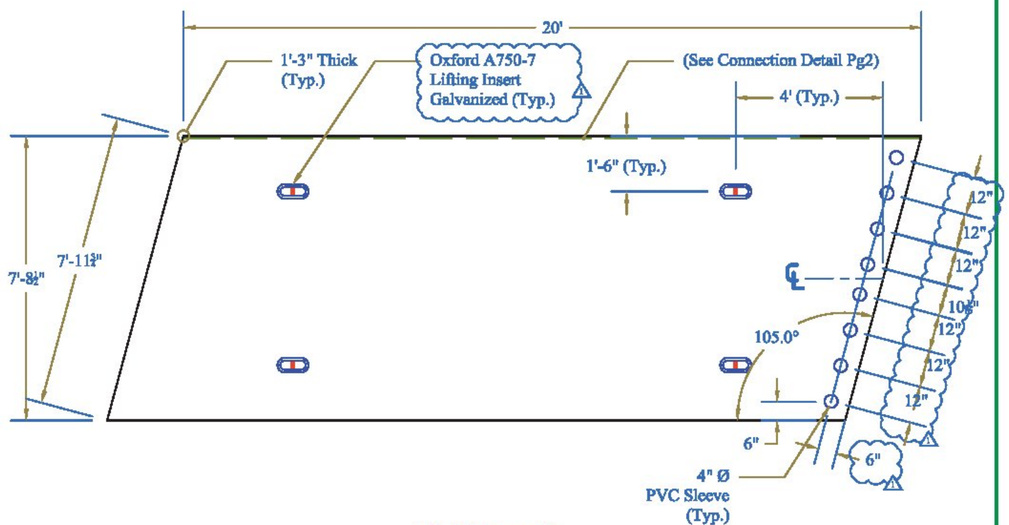

AS #4 Details

Vermont Agency of Transportation

RECEIVED

Approach Slab Submittal 201216_Markup.pdf

CK'D BY CLB OK'D BY DRP

January 13, 2015

RESUBMIT NO Approved AsNoted

BY C. CARLSON DATE 01/15/15

PRECAST CONCRETE APPROACH SLAB SHOP DRAWINGS (SDI JOB #15163)			INSTALLER: CCS Construction 138 Munson Ave Morrisville, VT 05661 PH: 802-888-7701	FABRICATOR: 193 INDUSTRIAL AVE. WILLISTON, VT 05495 Ph: (802) 658-0201 SD Ireland Precast Division	
SUPERVISOR: M. WHEELER	PROJECT NAME: Stowe BRF 0235 (II)				
DETAILER: I. ADAMS	PROJECT #: 0235 (II)				
CHECKER: E. Barendse	LOCATION: Stowe, VT				
ENGINEER:		11/20/14	South Approach Slabs		3 of 4

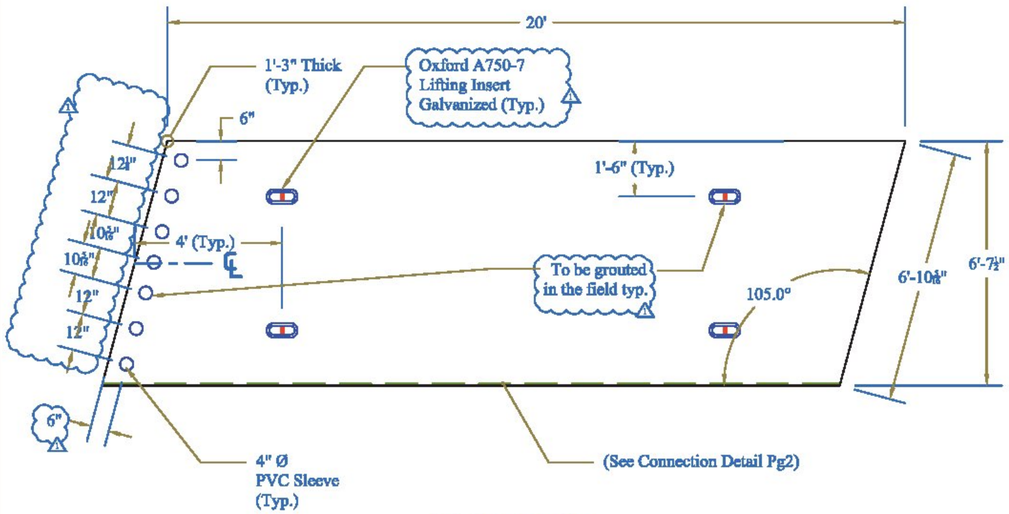

AS #5 Details

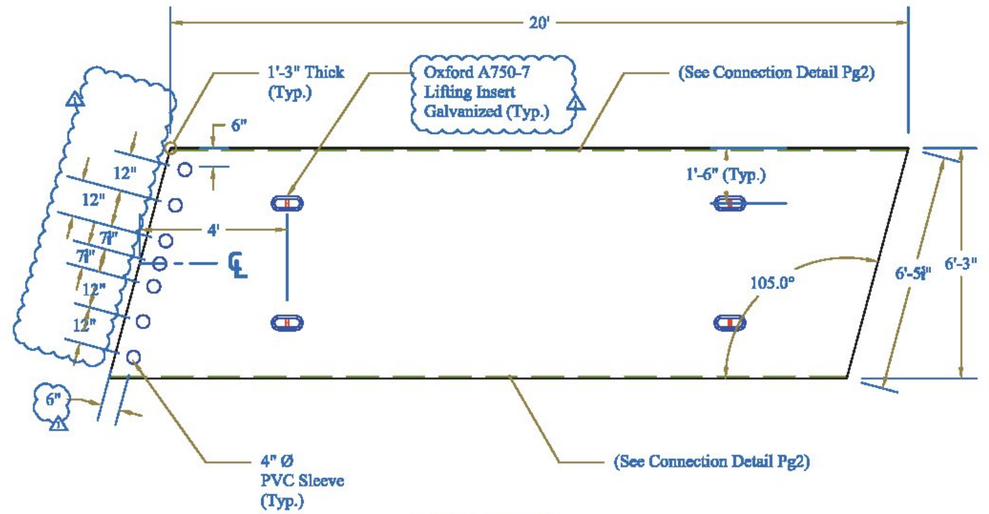

AS #6 Details

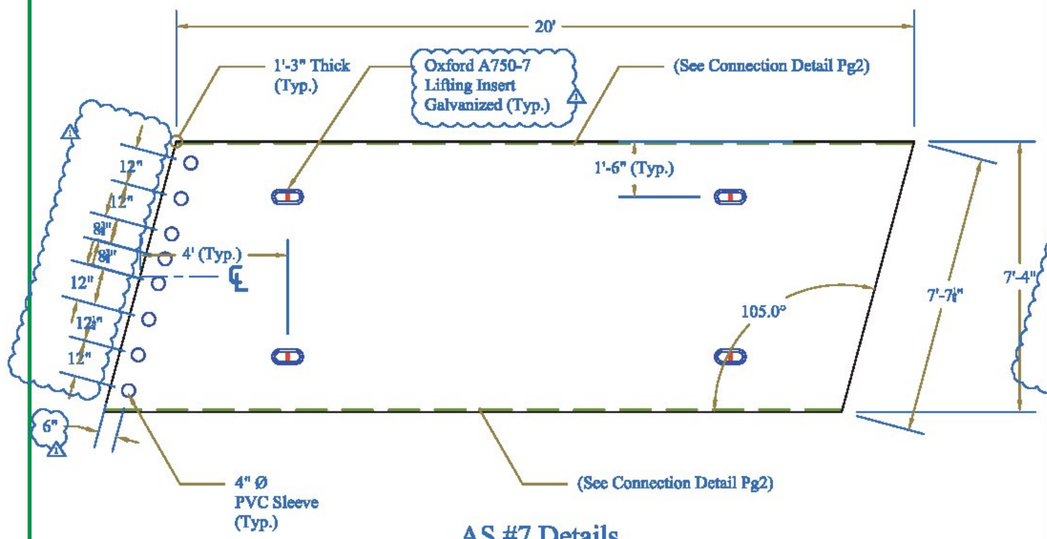

AS #7 Details

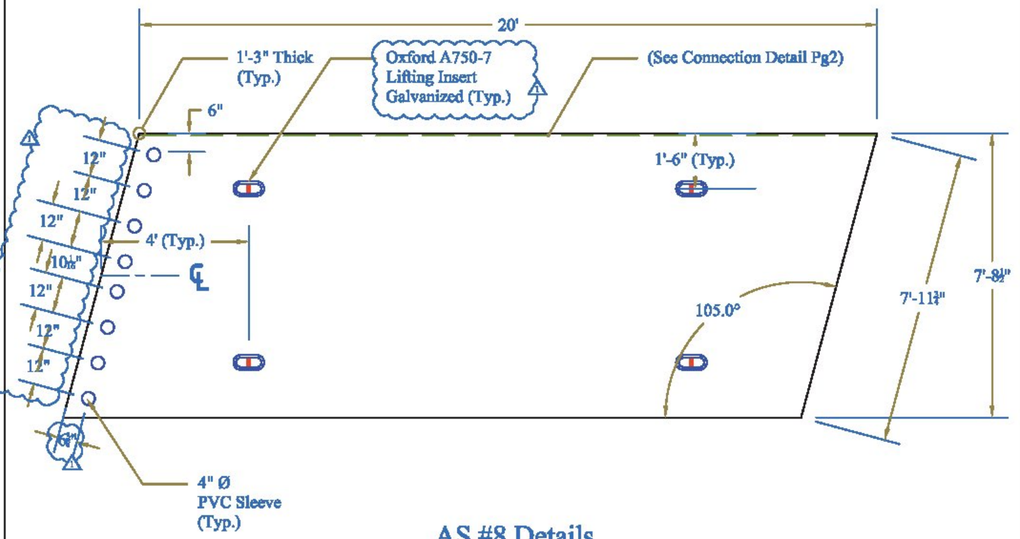

AS #8 Details

Vermont Agency of Transportation

RECEIVED

CK'D BY CLB OK'D BY DRP

January 13, 2015

RESUBMIT NO Approved

BY C. CARLSON DATE 01/15/15

PRECAST CONCRETE APPROACH SLAB SHOP DRAWINGS (SDI JOB #15163)

SUPERVISOR: M. WHEELER
DETAILER: I. ADAMS
CHECKER: E. Barendse
ENGINEER:

PROJECT NAME: Stowe BRF 0235 (II)
PROJECT #: 0235 (II)
LOCATION: Stowe, VT

INSTALLER:
CCS Construction
138 Munson Ave
Morrisville, VT 05661
PH: 802-888-7701

FABRICATOR:
193 INDUSTRIAL AVE.
WILLISTON, VT 05495
Ph: (802) 658-0201

SD Ireland Precast Division

11/20/14 | North Approach Slabs | 4 of 4

Approach Slab 1 & 2 Rebar at closure pour

*See Dimension Fabricators Drawings A & B for bar type, size & schedule

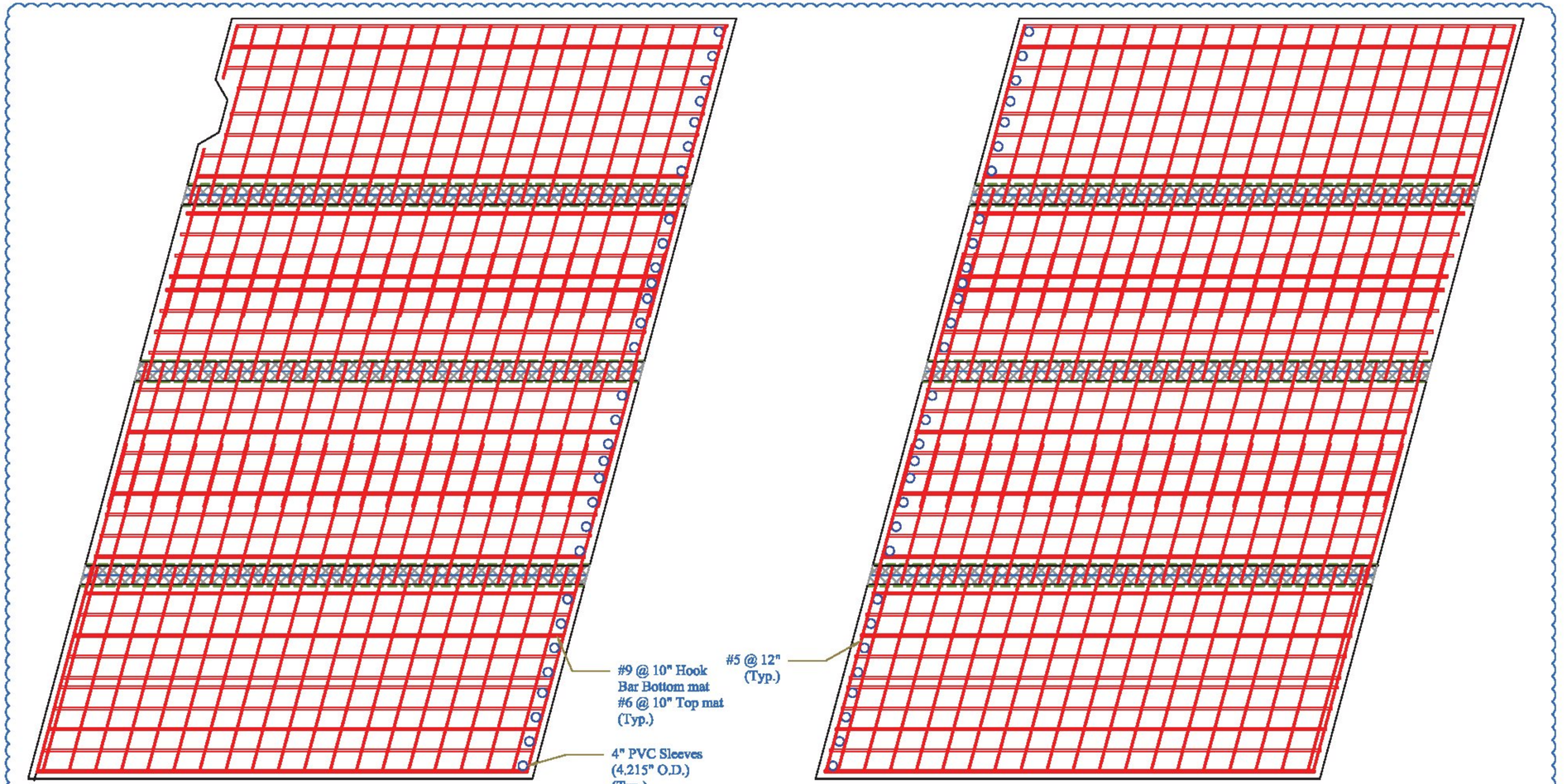

Approach Slab 1

Approach Slab 2

Vertical #8 bars in the cast-in-place closure pour of the abutments can be adjusted to match the pvc sleeves if necessary, but pvc sleeves cannot be adjusted once cast in the approach slab.

Vermont Agency of Transportation

RECEIVED

ApproachSlab Submittal 201215_Markup.pdf

CK'D BY CLB OK'D BY DRP

January 13, 2015

RESUBMIT NO Approved AsNoted

BY C. CARLSON DATE 01/15/15

PRECAST CONCRETE APPROACH SLAB SHOP DRAWINGS (SDI JOB #15163)		INSTALLER: CCS Construction 138 Munson Ave Morrisville, VT 05661 PH: 802-888-7701	FABRICATOR: 193 INDUSTRIAL AVE. WILLISTON, VT 05495 Ph: (802) 658-0201	SD Ireland Precast Division
SUPERVISOR: M. WHEELER DETAILER: I. ADAMS CHECKER: E. Barendse ENGINEER:	PROJECT NAME: Stowe BRF 0235 (II) PROJECT #: 0235 (II) LOCATION: Stowe, VT	12/05/14	Rebar at Closure Pour	

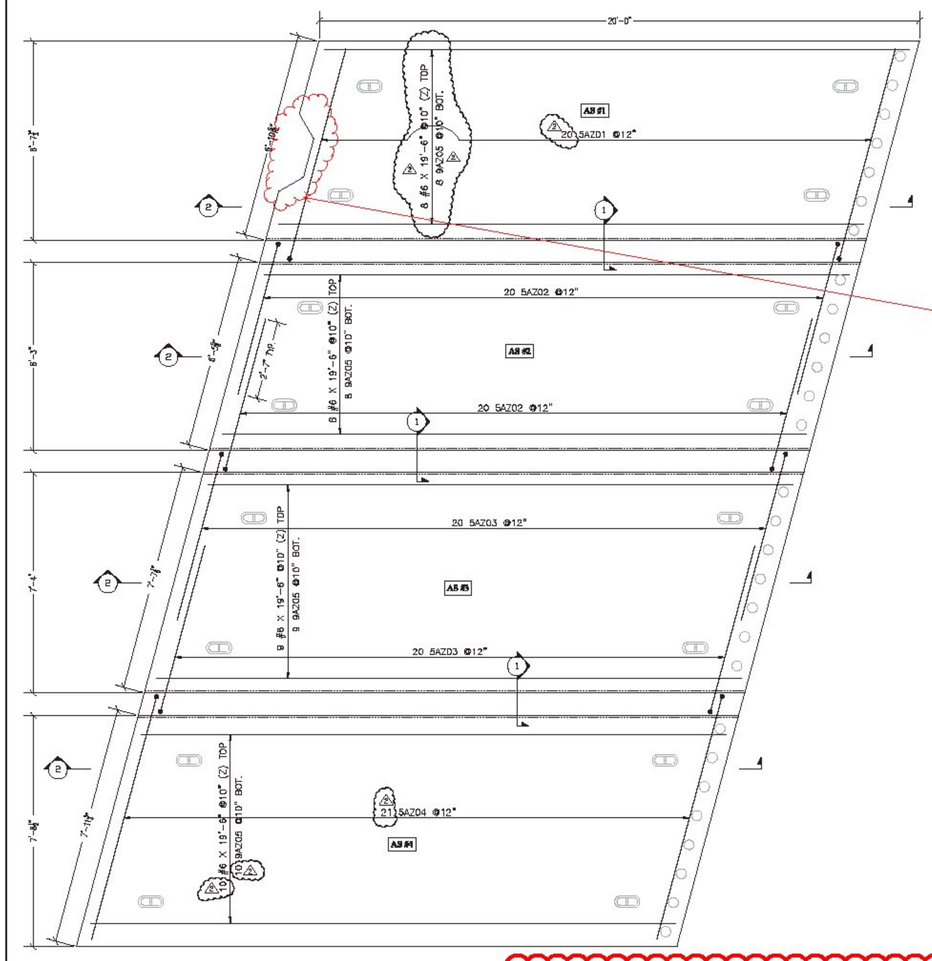

APPROACH SLAB #1 PLAN

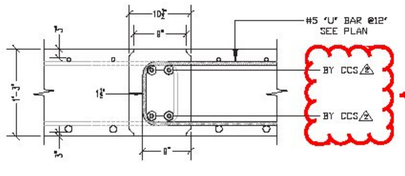

SECT. 1

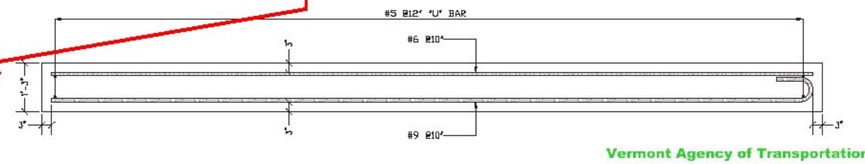

SECT. 2

Release Number: 001						BAR LIST											
Bar Mark	Qty	Size	Total Length	Type	'A'	'B'	'C'	'D'	'E'	'F'	'G'	'H'	'J'	'K'	'O'	'R'
	⚠2 35	#6	19'-6"			19'-6"										
5AZ01	20	#5	15'-3"	17		7'-4"	⚠2 0"-7⅛"	7'-4"								
5AZ02	40	#5	11'-1"	17		5'-3"	⚠2 0"-7⅛"	5'-3"								
5AZ03	40	#5	12'-3"	17		5'-10"	⚠2 0"-7⅛"	5'-10"								
5AZ04	⚠2 21	#5	17'-6"	17		8'-5 ½"	⚠2 0"-7⅛"	8'-5 ½"								
9AZ05	⚠2 35	#9	20'-8"	1	1'-3"	19'-5"							0'-11 ¾"			

*BAR MARKS MAY CHANGE DUE TO REVISIONS

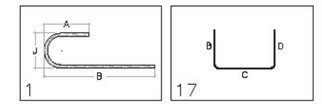

-confirmation of water main block out dimensions has not been confirmed yet; all full length bars will be ordered at this point, then cut to fit as needed.
-all cut ends will be dipped/painted with epoxy paint

See sheet 3 of 4. Per email, blockout dimensions will follow contract plan dimensions.

ALL DUAL COATED REINF. DENOTED (Z)

⚠2 (2) 5'-0" LONG SAMPLE BARS WILL BE PROVIDED FOR EACH BAR SIZE

Agree must provide two, 5-foot test bars per each bar size. Just make sure it is understood that the quantities at the top of this sheet do not account for the test bars.

LAP CHART	
#5	2'-7"

LEGEND:
CONT.-CONTINUOUS
TRANS.-TRANSVERSE
DWLS.-DOWELS
VERTS.-VERTICAL
HORIZ.-HORIZONTAL
T&B -TOP & BOTTOM
I.F.-INNER FACE
O.F.-OUTER FACE
E.E.-EACH END
E.F.-EACH FACE
F.F.-FRONT FACE
R.F.-REAR FACE
E.W.-EACH WAY
O.C.-ON CENTER
L.W.-LONG WAY
S.W.-SHORT WAY

FOR APPROVAL

ELEVATIONS & DIMENSIONS SHOWN ON THIS DWG. ARE FOR REINF. DETAILING PURPOSES ONLY AND ARE NOT INTENDED FOR CONSTRUCTION.

REINF. BARS ASTM A615 GRADE 60 DUAL COATED

VERIFICATION OF UNCLEAR INFORMATION MAY BE REQUESTED ON THIS DRAWING. SHOULD VERIFICATION BE LEFT UN-ADDRESSED IT WILL REMAIN AS SHOWN AND ASSUME TO BE CORRECT.

Okay that CCS is providing additional bars in the closure pour but it should be understood that these bars are incidental to the approach slab bid item.

Fine

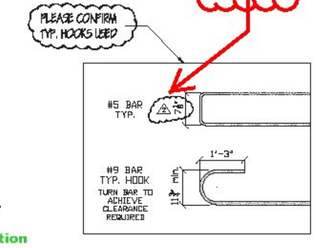

Vermont Agency of Transportation
RECEIVED
CK'D BY CLB OK'D BY DRP
January 13, 2015
RESUBMIT NO Approved AsNoted
BY C. CARLSON DATE 01/15/15

6			
5			
4			
3	1/12/15	⚠2	REVISED/ENG COM/FOR APPROVAL
2	12/3/14	⚠1	REVISED/SDI COM/FOR APPROVAL
1	12/2/14	0	FOR APPROVAL
	DATE	REV.#	STATUS

DIMENSION FABRICATORS INC.

STRUCTURE: VTAOT STOWE BRF 0239(11)
LIGHTING:
ARCHITECT:
EARTHWORK:
CONTRACTOR: SD IRELAND CONCRETE CONST. CORP.
DRAWN BY: ED
DATE: 12/2/14
DWG. #: 9117
DRAWING TITLE: APPROACH SLAB #1 DUAL COATED REINFORCING
DRAWING #: A

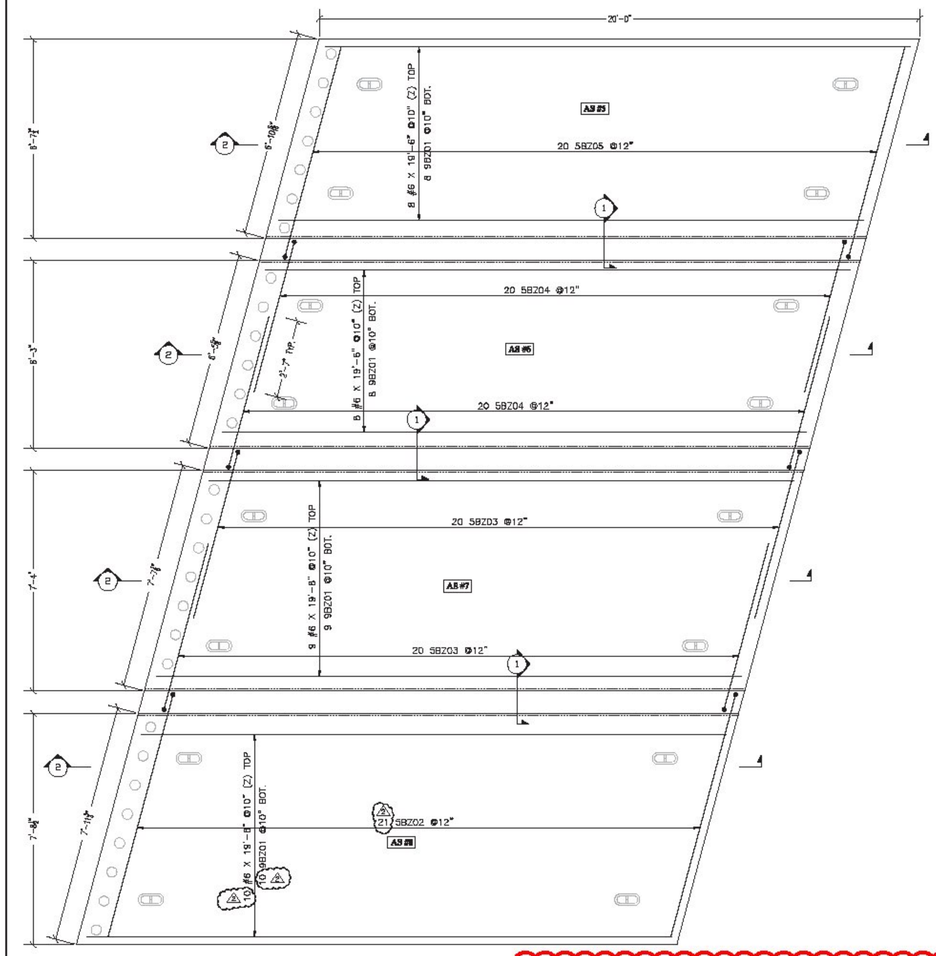

APPROACH SLAB #2 PLAN

Release Number: 002						BAR LIST											
Bar Mark	Qty	Size	Total Length	Type	'A'	'B'	'C'	'D'	'E'	'F'	'G'	'H'	'J'	'K'	'O'	'R'
	⚠3 35	#6	19'-6"			19'-6"										
5BZ02	⚠3 21	#5	17'-6"	17		8'-5 ⅜"	⚠3 0'-7⅛"	8'-5 ⅜"								
5BZ03	40	#5	12'-3"	17		5'-10"	⚠3 0'-7⅛"	5'-10"								
5BZ04	40	#5	11'-1"	17		5'-3"	⚠3 0'-7⅛"	5'-3"								
5BZ05	20	#5	15'-3"	17		7'-4"	⚠3 0'-7⅛"	7'-4"								
9BZ01	⚠3 35	#9	20'-9"	1	1'-3"	19'-6"							0'-11 ¾"			

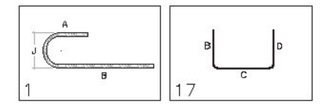

⚠3 (2) 5'-0" LONG SAMPLE BARS WILL BE PROVIDED FOR EACH BAR SIZE

ALL DUAL COATED REINF. DENOTED (Z)

Agree must provide two, 5-foot test bars per each bar size. Just make sure it is understood that the quantities at the top of this sheet do not account for the test bars.

LAP CHART	
#5	2'-7"

FOR APPROVAL

LEGEND:
CONT.-CONTINUOUS
TRANS.-TRANSVERSE
DWLS.-DOWELS
VERTS.-VERTICAL
HORIZ.-HORIZONTAL
T&B -TOP & BOTTOM
I.F.-INNER FACE
O.F.-OUTER FACE
E.E.-EACH END
E.F.-EACH FACE
F.F.-FRONT FACE
R.F.-REAR FACE
E.W.-EACH WAY
O.C.-ON CENTER
L.W.-LONG WAY
S.W.-SHORT WAY

ELEVATIONS & DIMENSIONS SHOWN ON THIS DWG. ARE FOR REINF. DETAILING PURPOSES ONLY AND ARE NOT INTENDED FOR CONSTRUCTION.

REINF. BARS ASTM A615 GRADE 60 DUAL COATED

VERIFICATION OF UNCLEAR INFORMATION MAY BE REQUESTED ON THIS DRAWING. SHOULD VERIFICATION BE LEFT UN-ADDRESSED IT WILL REMAIN AS SHOWN AND ASSUME TO BE CORRECT.

Okay that CCS is providing additional bars in the closure pour but it should be understood that these bars are incidental to the approach slab bid item.

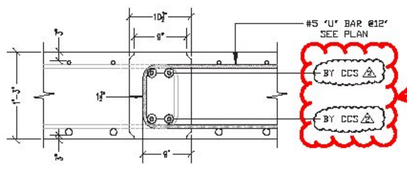

(3 THUS)

SECT. 1

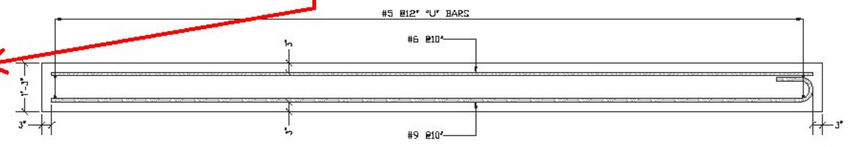

SECT. 2

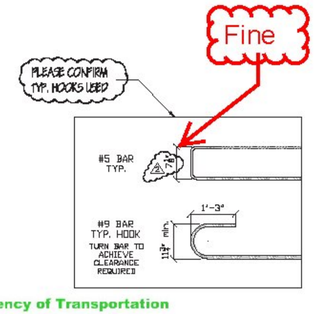

6			
5			
4			
3	1/12/15	⚠3	REVISED/ENG. COM/FOR APPROVAL
2	12/3/14		REVISED/SDI COM/FOR APPROVAL
1	12/2/14	0	FOR APPROVAL
	DATE	REV.#	STATUS

DIMENSION
DIMENSION FABRICATORS INC.

STRUCTURE	VTAOT STOWE BRF 0239(11)
LOCATION	
ARCHITECT	
ENGINEER	
OWNER	SD IRELAND CONCRETE CONST. CORP.
DRAWN BY: ED	DATE: 12/2/14
DRAWING CONTENTS: APPROACH SLAB #2 DUAL COATED REINFORCING	DRAWING #: B

Vermont Agency of Transportation
RECEIVED
CK'D BY CLB OK'D BY DRP
January 13, 2015
RESUBMIT NO Approved AsNoted
BY C. CARLSON DATE 01/15/15

GENERAL NOTES

1. ALL BEARINGS SHALL CONFORM TO THE STATE OF VERMONT AGENCY OF TRANSPORTATION STANDARD SPECIFICATIONS, LATEST EDITION, SECTIONS 531 AND 731 AND THE CONTRACT PRINTS, UNLESS NOTED OTHERWISE.
2.
3. MATERIALS:
   ELASTOMER.....50 DURO NATURAL, GRADE 4 (110 ± 15 psi)
   CARBON STEEL SHIMS.....ASTM A1011, GR. 40

4. TOLERANCES:
   LAMINATED ELASTOMERIC PADS:
   - DUROMETER.....± 5
   - OVERALL THICKNESS (VERTICAL) OVER 1 1/4".....-0, +1/4"
   - OVERALL LENGTH & WIDTH (HORIZONTAL) 36" OR LESS.....-0, +1/4"
   - THICKNESS OF INDIVIDUAL
     - LAYERS OF ELASTOMER.....±1/8"
     - PARALLELISM:
     - TOP.....0.005 rad
     - SIDES.....1/4"
   - EDGE COVER.....-0, +1/8"

5. MARKINGS:
   EACH BEARING SHALL BE PERMANENTLY MARKED IN A LOCATION THAT IS VISIBLE WHEN THE DEVICE IS INSTALLED IN THE COMPLETED STRUCTURE. MARKING SHALL BE SEP STANDARD:
   - CONTRACT/ORDER #
   - LOT#
   - BEARING ID # (MK. #)
   - LOCATION/BRIDGE #
   - ELASTOMER TYPE AND GRADE
   - ORIENTATION (WHERE APPLICABLE)

6. TESTING: PER SPECIFICATIONS CITED IN GENERAL NOTE #1.

7. SEP TO PROVIDE ONLY THE ITEMS SHOWN ON THIS DRAWING.

8. SHIPPING: BEARINGS SHALL BE PACKAGED IN SUCH A MANNER TO ENSURE THAT DURING SHIPMENT AND STORAGE THE BEARINGS WILL BE PROTECTED AGAINST DAMAGE FROM HANDLING, WEATHER OR ANY NORMAL HAZARD.

9. REPRESENTATIVE
   CUSTOMER SERVICE: STEVE BOWMAN.....903-677-4318
   TECHNICAL: MIKE SPELLMAN.....903-677-4342

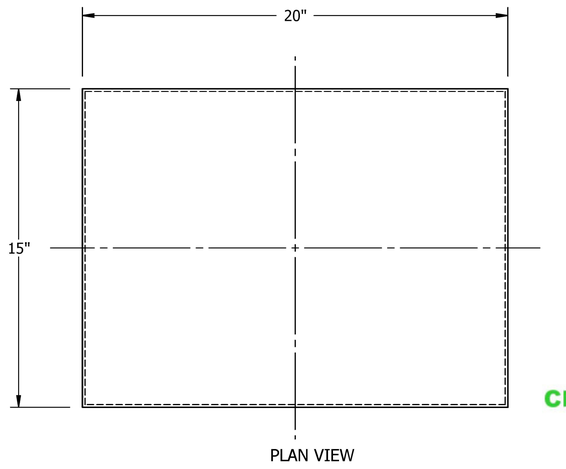

PLAN VIEW

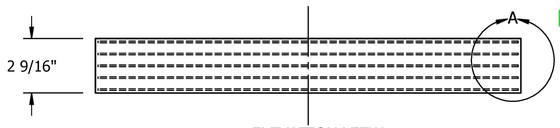

ELEVATION VIEW

REVISIONS			
REV.	DESCRIPTION	BY	DATE
A	SUBMITTAL	AL	12/9/2014

Vermont Agency of Transportation

RECEIVED

SO-60933 VT Submittal Shop Drawing.pdf

CK'D BY D. Peterson OK'D BY C. Carlson

December 9, 2014

RESUBMIT No Approved

BY C. Carlson DATE 12/10/2014

MK.01
BEARING PADS
(10) REQ'D

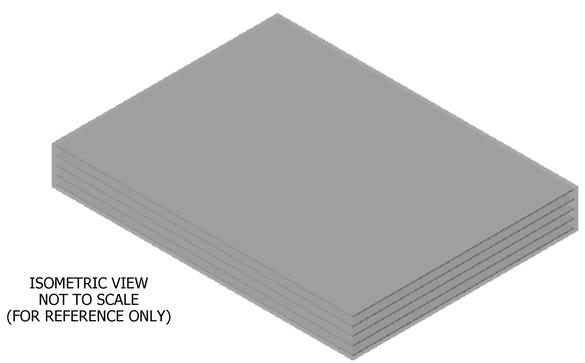

ISOMETRIC VIEW
NOT TO SCALE
(FOR REFERENCE ONLY)

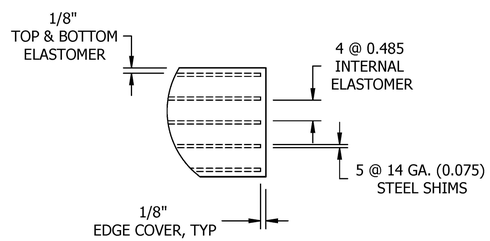

DETAIL A

ALL DIMENSIONS ARE IN INCHES UNLESS OTHERWISE SPECIFIED

NOTE

INFORMATION SET FORTH IN THIS DRAWING IS PROPRIETARY WITH Seismic Energy Products, Inc. THIS DRAWING SHALL NOT BE REPRODUCED, COPIED, LOANED OR SUBMITTED TO OUTSIDE PARTIES FOR EXAMINATION WITHOUT OUR CONSENT EXCEPT FOR THE PURPOSE FOR WHICH IT WAS INTENDED.

Seismic Energy Products, Inc.
STRUCTURAL BEARINGS FOR BRIDGES & BUILDINGS
ATHENS, TX PHONE: 903-675-8571

BEARING ASSY FOR:

STATE OF VERMONT AGENCY OF TRANSPORTATION

VT RT 108, MAJOR COLLECTOR - BRIDGE NO. 2

CONTRACTOR: CCS CONSTRUCTORS, INC.

PROJECT NO. BRF 0235(II)		
COUNTY LAMOILLE		
TOWN STOWE		
DRAWN ALUTTRELL	DATE 12/7/14	PO # B3028
CHECKED .	DATE .	SO NO. & ST. **60933 VT**
REVIEWED MSPELLMAN	DATE 12/9/14	SHEET 1 OF 1

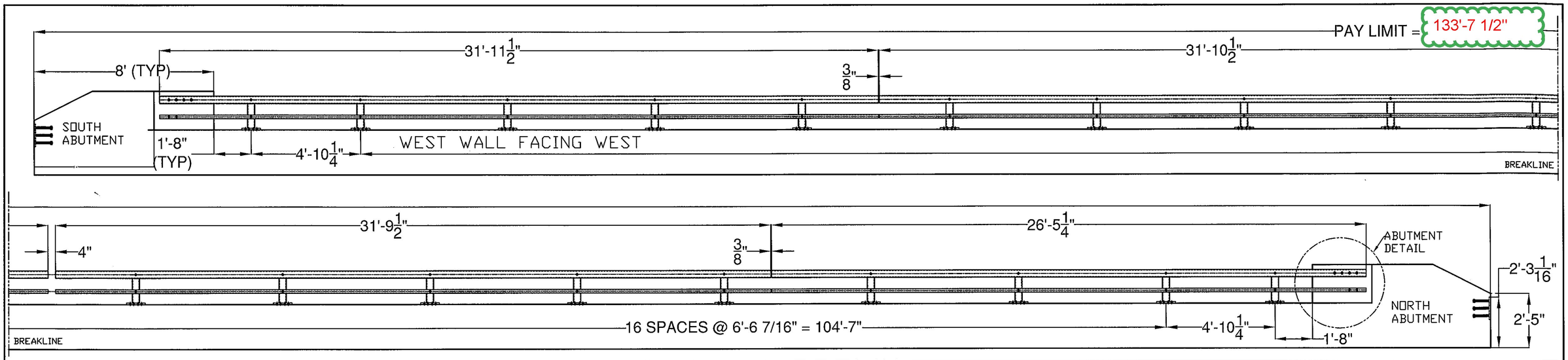

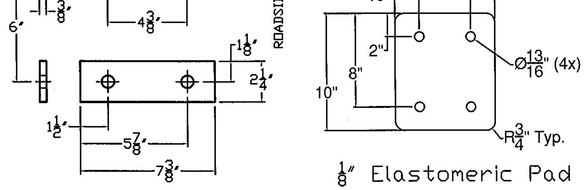

1/8" Elastomeric Pad

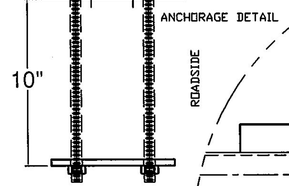

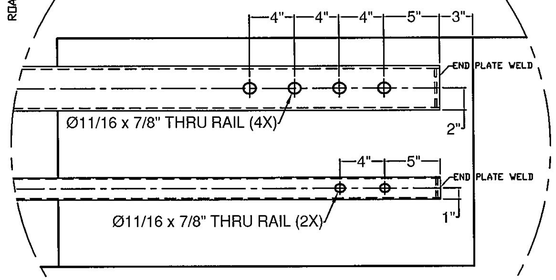

ABUTMENT DETAIL

PAINTED BROWN
ASTM 708.03

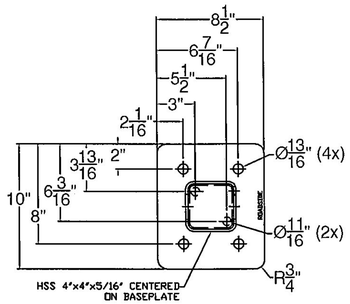

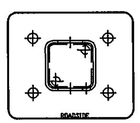

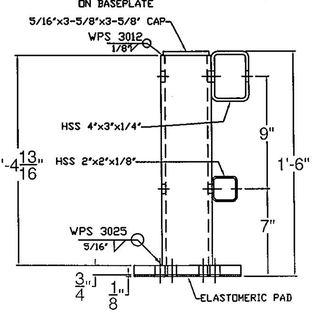

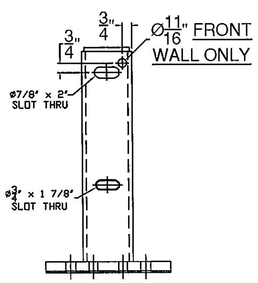

NOTES:

1. ALL WORK AND MATERIALS SHALL CONFORM TO SECTION 525.
2. PRIOR TO GALVANIZING THE ASSEMBLED POST, GRIND ALL EDGES TO A MINIMUM RADIUS OF 1/16".
3. ALL POSTS SHALL BE SET NORMAL TO GRADE.
4. SECTIONS OF RAIL TUBE SHALL BE ATTACHED TO A MINIMUM OF TWO BRIDGE POSTS AND PREFERABLY TO AT LEAST 4 POSTS.
5. HOLES ILLED.
6. BOLTS) FT-LB).
7. RAIL TI DY ASTM A449 (TYPE I) ROUND HEAD BOLTS INSERTED THROUGH THE FA
8. SEE ST . A DELINEATOR SHALL BE INSTALLED AT 30 FOOT SPACING OR THE NE RIVER'S RIGHT. FOR ONE WAY BRIDGES, YELLOW IS TO BE INSTALI ORS SHALL BE INCIDENTAL TO OTHER ITEMS.
9. AESTHE IED IN THE CONTRACT PLANS. IF NONE IS SPECIFIED IT SHALL NOT BE EET MAY ALSO BE APPLIED ON THE FASCIA SIDE OF THE RAIL, IF SPE
10. BRIDGE NCE WITH SECTION 501.
11. THIS R ORT 350 TL-4 SERVICE LEVEL.
12. HOLES FOR MOUNTING DELINEATORS TO BE FIELD DRILLED. HOLES SHALL BE COATED WITH AN APPROVED ZINC-RICH PAINT PRIOR TO INSTALLATION.
13. ALL STEEL COMPONENTS OF BRIDGE RAILING AND BOX BEAM GUARDRAIL, INCLUDING THE RAIL CONNECTION TO THE BRIDGE RAIL SHALL BE GALVANIZED IN ACCORDANCE WITH THE STANDARD SPECIFICATIONS AND SURFACE PREPARED FOR PAINTING IN ACCORDANCE WITH ASTM D 6386. COMPONENTS SHALL BE PAINTED BROWN IN ACCORDANCE WITH SUBSECTION 708.03.

Vermont Agency of Transportation
RECEIVED
CK'D BY D. PETERSON OK'D BY C. CARLSON
March 6, 2015
RESUBMIT NO Approved AsNoted
BY C. CARLSON DATE 03/09/2015

BILL OF MATERIAL

ITEM #	QTY	PART #	DESCRIPTION	ASTM DESIGNATION
1	19	0033.90017	TWO RAIL POST & BASE PLATE ASSEMBLY	A572 Gr. 50, A500 Gr. B
2	1	0033.91358	4" X 3" X 1/4" RAIL @ 31'-11 1/2" W/ END PLATES	A500 Gr. B
3	1	0033.91359	4" X 3" X 1/4" RAIL @ 31'-10 1/2"	A500 Gr. B
4	1	0033.91360	4" X 3" X 1/4" RAIL @ 31'-9 1/2"	A500 Gr. B
5	1	0033.91361	4" X 3" X 1/4" RAIL @ 26'-5 1/4" W/ END PLATES	A500 Gr. B
6	1	0033.91362	2" X 2" X 1/8" RAIL @ 31'-11 1/2" W/ END PLATES	A500 Gr. B
7	1	0033.91363	2" X 2" X 1/8" RAIL @ 31'-10 1/2"	A500 Gr. B
8	1	0033.91364	2" X 2" X 1/8" RAIL @ 31'-9 1/2"	A500 Gr. B
9	1	0033.91365	2" X 2" X 1/8" RAIL @ 26'-5 1/4" W/ END PLATES	A500 Gr. B
10	2	0033.90069	1-1/2" X 1-1/2" FIX. SPL BAR @ 2' 4"	A572 Gr. 50
11	2	0033.90071	2-1/4" X 3-1/4" FIX. SPL. BAR @ 2' 4"	A572 Gr. 50
12	1	0033.90328	1-1/2" X 1-1/2" EXP. SPL BAR @ 2' 4"	A572 Gr. 50
13	1	0033.90072	2-1/4" X 3-1/4" EXP. SPL. BAR @ 2' 4"	A572 Gr. 50
14	38	0033.00295	3/8" X 2 1/4" X 7 3/8" ANCHOR PLATES	A36
15	78*	0042.05813	ø 5/8" X 13" ANCHOR STUDS	A449
16	154*	0080.15901	ø 5/8" HEAVY HEX NUTS	A563
17	76	0080.15911	ø 5/8" FLAT WASHERS	F436
18	76	0080.15920	ø 5/8" LOCK WASHERS	ASME D18.2
19	19	0080.05565	ø 5/8" X 7 1/2" SLOTTED, ROUND HEAD BOLT, NUT, F.W., & L.W.	A449, A563 DH, F436, & ASME D18.21.1
20	19	0080.06410	ø 3/4" X 8 1/2" SLOTTED, ROUND HEAD BOLT, NUT, F.W., & L.W.	A449, A563 DH, F436, & ASME D18.21.1
21	12	0080.05275	ø 5/8" X 3" HEX BOLT, NUT, F.W., & L.W.	A325, A563 DH, F436, & ASME D18.21.1
22	12	0080.07330	ø 7/8" X 5 1/2" HEX BOLT, NUT, F.W., & L.W.	A325, A563 DH, F436, & ASME D18.21.1
23	4	0080.05760	ø 5/8" X 13" SLOTTED, ROUND HEAD BOLT, NUT, F.W., & L.W.	A449, A563 DH, F436, & ASME D18.21.1
24	8	0080.07710	ø 7/8" X 14" SLOTTED, ROUND HEAD BOLT, NUT, F.W., & L.W.	A449, A563 DH, F436, & ASME D18.21.1
25	19	0033.00053	1/8" ELASTOMERIC PAD	D2240
26	2	0033.90410	APPROACH, END WALL CONNECTORS	PER BOM
27	2	0033.90411	TRAILING, END WALL CONNECTORS	PER BOM
28	5		DELINEATORS (SUPPLIED BY F.R. LaFAYETTE)	ALUMINUM

*-2 EXTRA FOR VOAT TESTING

HARDWARE NOTES

ITEM #	FUNCTION
19	BOLT BOTTOM RAIL TO POST (ITEM #1)
20	BOLT TOP RAIL TO POST (ITEM #1)
21	BOLT BOTTOM SPLICE BARS (ITEM #6) TO BOTTOM RAIL
22	BOLT TOP SPLICE BARS (ITEM #7) TO TOP RAIL
23	BOLT BOTTOM RAIL TO END ABUTMENT
24	BOLT TOP RAIL TO END ABUTMENT

ITEM #: 525.45

STRUCTURAL STEEL TO COMPLY W/ ASTM A6

TOLERANCE UNLESS OTHERWISE NOTED:
FRACTIONS = ± 1/16"
ANGLES = ± 1/2°
DIAMETERS = ± 1/32"

SHEET 1 OF 3

BRIDGE RAIL DETAILS SHEET

PROJECT: STOWE BRF 0235 (11), VT. RT. 108, MAJOR COLLECTOR, BRIDGE #2
TOWN OF STOWE, LAMOILLE COUNTY

R	NO.	DATE	DESCRIPTION	BY	R	NO.	DATE	DESCRIPTION	BY
E	1	3/5/15	REVISE PER 1/26/15 MARK-UP	E.P.	E				
V					V				

ELDERLEE, INC.
OAKS CORNERS, NEW YORK 14518
E-Mail:dlong@elderlee.com / epeek@elderlee.com
Tel:315-789-6670 Fax:315-789-6615

CERTIFIED FABRICATOR

DRAWN	E.P.	1/13/15
CHECKED	D.L.	1/15/15
APPROVED	.	.
SCALE	SCHEMATIC	
DRAWING NO.	FR L - STOWE	

ø15/16" THRU TUBE & SPLICE BAR, ø7/8"X5 1/2" HEX BOLT & NUT, W/ (1) PLAIN HARDENED WASHER & (1) LOCK WASHER (4 PLACES)

TOP RAIL FIXED SPLICE DETAIL

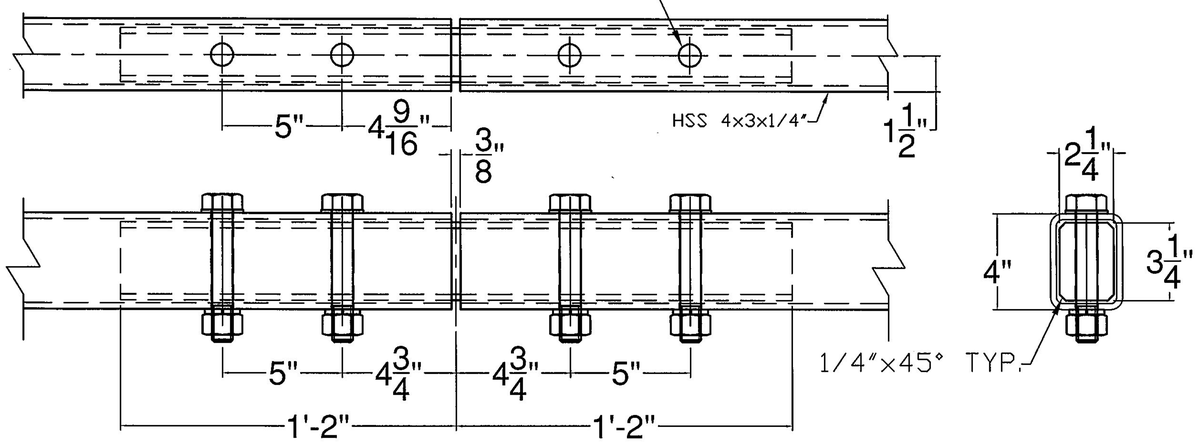

ø15/16" THRU TUBE & ø15/16" X 3" SLOT THRU SPLICE BAR, ø7/8"X5 1/2" HEX BOLT & NUT, W/ (1) PLAIN HARDENED WASHER & (1) LOCK WASHER (4 PLACES)

TOP RAIL EXPANSION SPLICE DETAIL

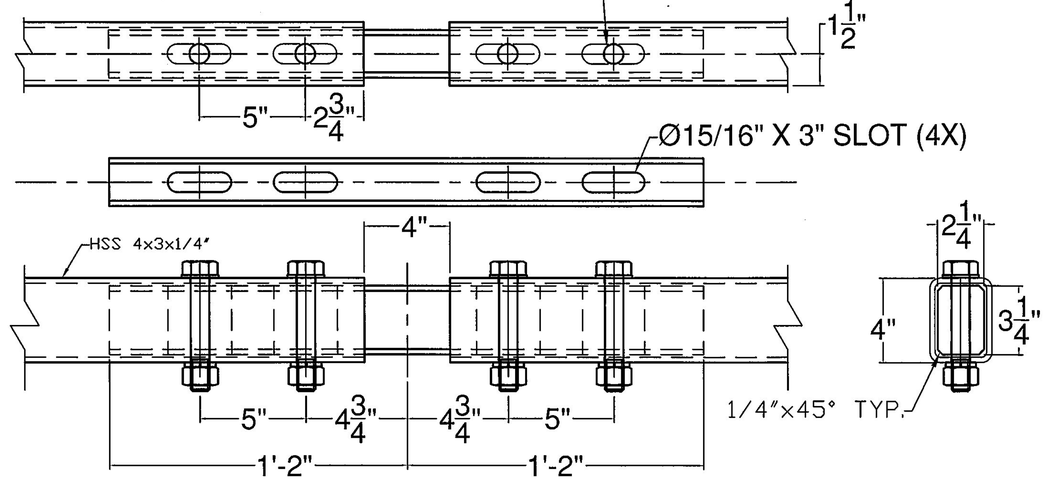

ø11/16" THRU TUBE & SPLICE BAR, ø5/8"X3" HEX BOLT & NUT, W/ (1) PLAIN HARDENED WASHER & (1) LOCK WASHER (4 PLACES)

BOTTOM RAIL FIXED SPLICE DETAIL

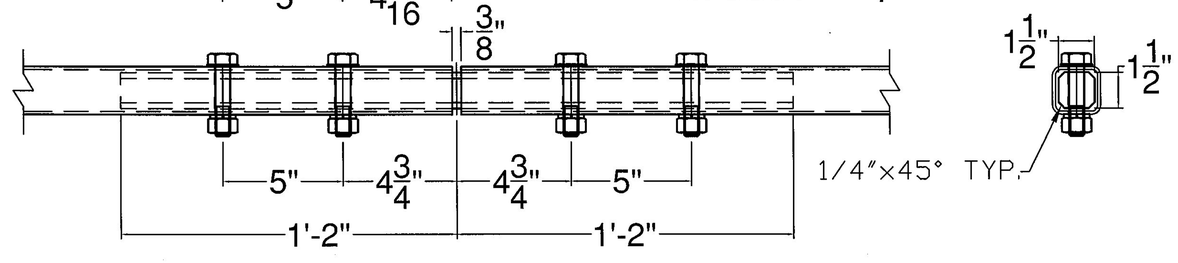

ø11/16" THRU TUBE & ø11/16" X 3" SLOT THRU SPLICE BAR, ø5/8"X3" HEX BOLT & NUT, W/ (1) PLAIN HARDENED WASHER & (1) LOCK WASHER (4 PLACES)

BOTTOM RAIL EXPANSION SPLICE DETAIL

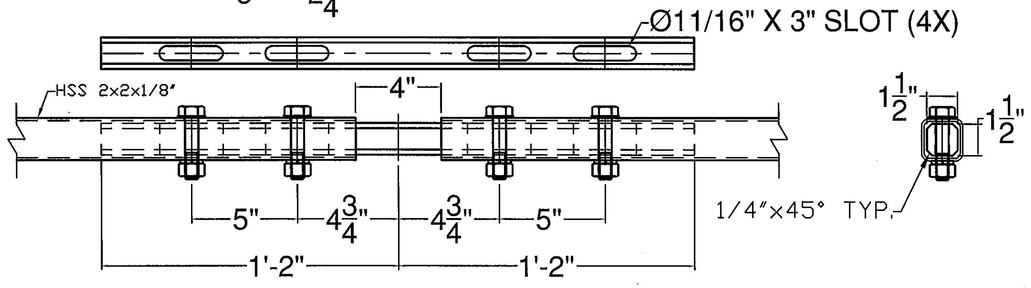

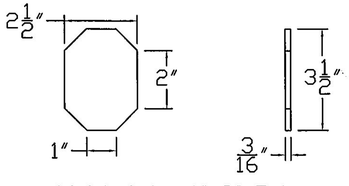

Welded to 4"x3" Tube

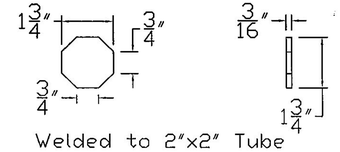

Welded to 2"x2" Tube

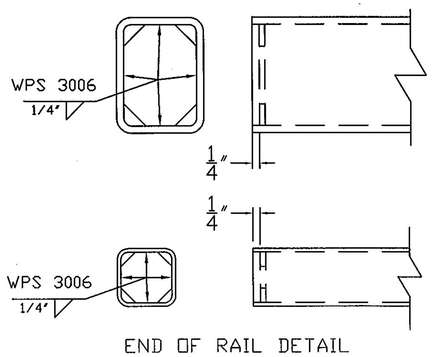

END OF RAIL DETAIL

Vermont Agency of Transportation

RECEIVED

Stowe BRF 0235 (11) Rev1.pdf

CK'D BY D. PETERSON OK'D BY C. CARLSON

March 6, 2015

RESUBMIT NO Approved

BY C. CARLSON DATE 03/09/2015

ITEM #: 525.45

SHEET 2 OF 3

STRUCTURAL STEEL TO COMPLY W/ ASTM A6

TOLERANCE UNLESS OTHERWISE NOTED:
FRACTIONS = ± 1/16"
ANGLES = ± 1/2°
DIAMETERS = ± 1/32"

BRIDGE RAIL DETAILS SHEET

PROJECT: STOWE BRF 0235 (11), VT. RT. 108, MAJOR COLLECTOR, BRIDGE #2
TOWN OF STOWE, LAMOILLE COUNTY

R	NO.	DATE	DESCRIPTION	BY
E	1	3/5/15	ADDED END OF RAIL DETAIL	E.P.
V				

R	NO.	DATE	DESCRIPTION	BY
E				
V				

ELDERLEE, INC.
OAKS CORNERS, NEW YORK 14518
E-Mail: dlong@elderlee.com / epeek@elderlee.com
Tel: 315-789-6670 Fax: 315-789-6615

½ CERTIFIED FABRICATOR

DRAWN	E.P.	1/13/15
CHECKED	D.L.	1/15/15
APPROVED	.	.
SCALE	SCHEMATIC	
DRAWING NO.	FR L - STOWE	

BILL OF MATERIALS			
ITEM #	QTY	DESCRIPTION	ASTM #
1	1	TUBE WALL PLATE - 3/4" X 11" x 12"	ASTM A572 Gr. 50
2	6	ø3/4" X 8" STUD	TO BE PURCHASED
3	1	5" X 5" X 5/16" TUBE W/ SLOTS @ 19 5/16"	ASTM A500 Gr. B
4	1	SHIM PL 1/2" X 4" X 16" W/ SLOTS	ASTM A709 Gr. 36 CVN
5	1	SHIM PL 1/2" X 4" X 16" (W/O SLOTS)	ASTM A709 Gr. 36 CVN

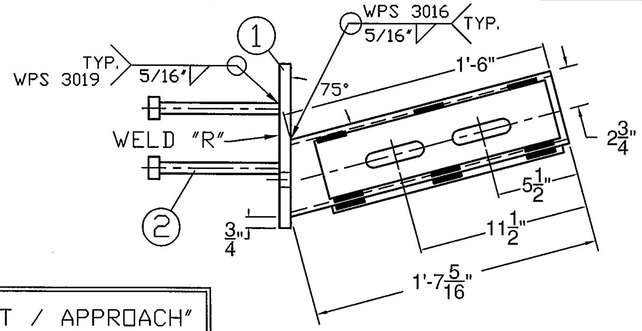

"RIGHT / APPROACH"

PROTRUSIONS CAUSED BY WELDING OR GALVANIZING ARE NOT PERMITTED ON THE SPLICE TUBES AND FILL PLATES

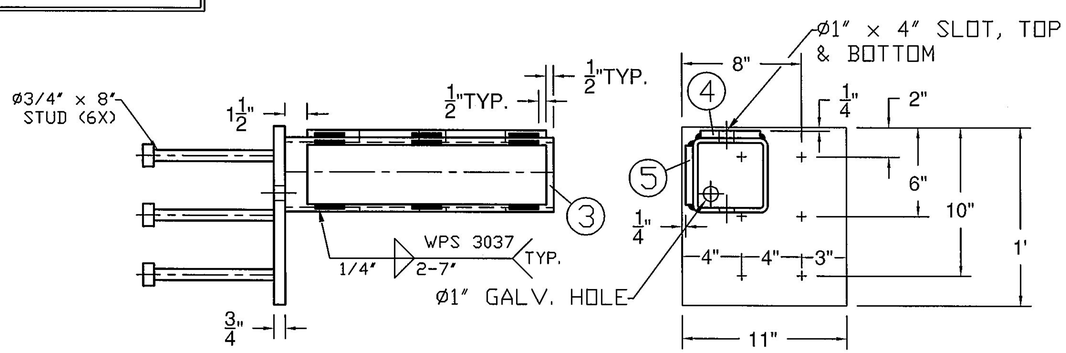

15° SKEW NOT SHOWN IN THESE VIEWS

BILL OF MATERIALS			
ITEM #	QTY	DESCRIPTION	ASTM #
1	1	TUBE WALL PLATE - 3/4" X 11" x 12"	ASTM A572 Gr. 50
2	6	ø3/4" X 8" STUD	TO BE PURCHASED
3	1	5" X 5" X 5/16" TUBE W/ SLOTS @ 19 5/16"	ASTM A500 Gr. B
4	1	SHIM PL 1/2" X 4" X 16" W/ SLOTS	ASTM A709 Gr. 36 CVN
5	1	SHIM PL 1/2" X 4" X 16" (W/O SLOTS)	ASTM A709 Gr. 36 CVN

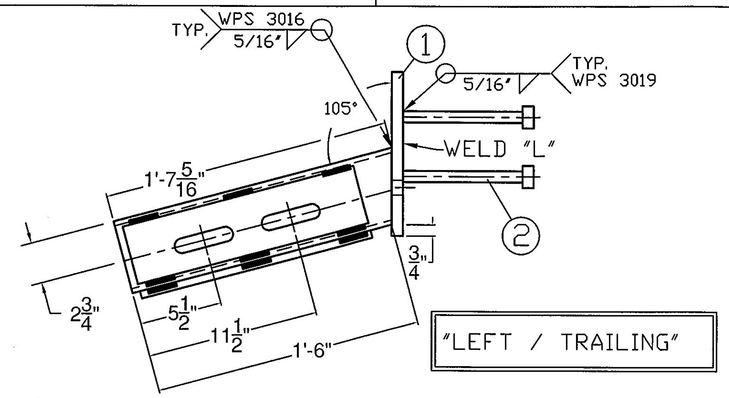

"LEFT / TRAILING"

PROTRUSIONS CAUSED BY WELDING OR GALVANIZING ARE NOT PERMITTED ON THE SPLICE TUBES AND FILL PLATES

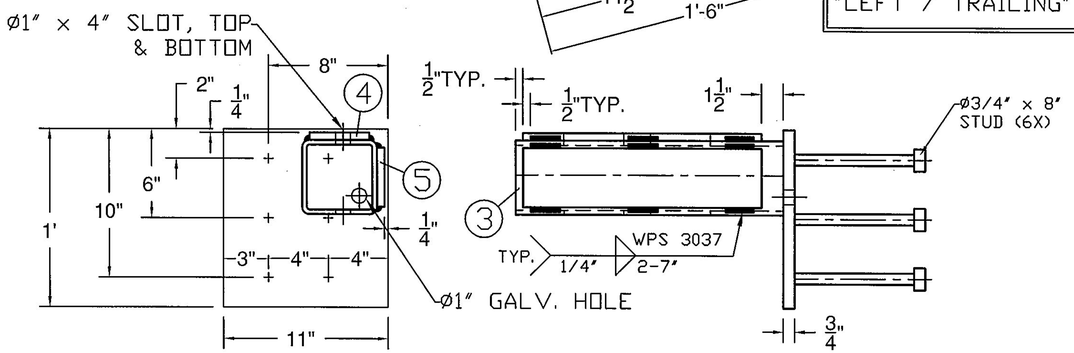

15° SKEW NOT SHOWN IN THESE VIEWS

Vermont Agency of Transportation

RECEIVED

Stowe BRF 0235 (11) Re-rl-pdf

CK'D BY D. PETERSON OK'D BY C. CARLSON

March 6, 2015

RESUBMIT NO Approved

BY C. CARLSON DATE 03/09/2015

ITEM #: 525.45

SHEET 3 OF 3

STRUCTURAL STEEL TO COMPLY W/ ASTM A6

TOLERANCE UNLESS OTHERWISE NOTED:
FRACTIONS = ± 1/16"
ANGLES = ± 1/2°
DIAMETERS = ± 1/32"

BRIDGE RAIL DETAILS SHEET

PROJECT: STOWE BRF 0235 (11), VT. RT. 108, MAJOR COLLECTOR, BRIDGE #2
TOWN OF STOWE, LAMOILLE COUNTY

REV	NO.	DATE	DESCRIPTION	BY

REV	NO.	DATE	DESCRIPTION	BY

ELDERLEE, INC.
OAKS CORNERS, NEW YORK 14518
E-Mail: dlong@elderlee.com / epeek@elderlee.com
Tel: 315-789-6670 Fax: 315-789-6615

AISC CERTIFIED FABRICATOR

DRAWN	E.P.	1/13/15
CHECKED	D.L.	1/15/15
APPROVED	.	.
SCALE	SCHEMATIC	
DRAWING NO.	FR L - STOWE	

* Frame & Grate will be galvenized *
Eric SDI 2/17/15

Requries Galvanizing per note on plan sheet #28

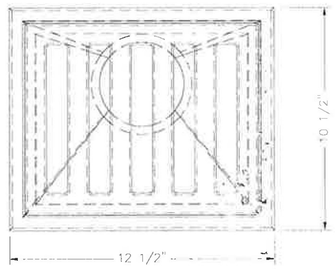

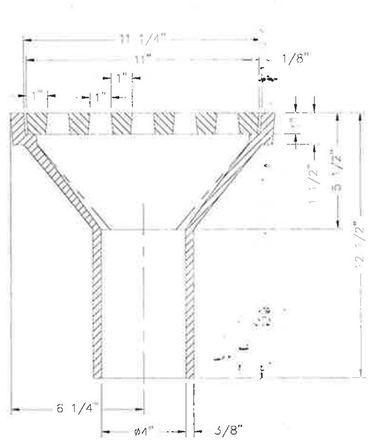

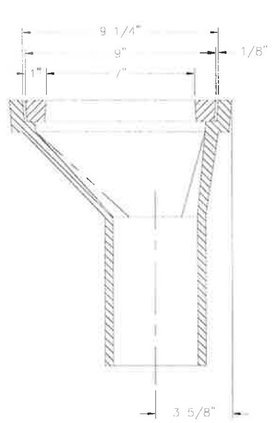

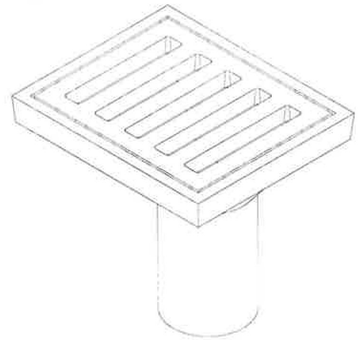

Vermont Agency of Transportation

RECEIVED

Bridge Scupper ReSubmittal 022715.pdf

CK'D BY D. PETERSON **OK'D BY** C. CARLSON

February 17, 2015

RESUBMIT NO **Approved**

BY C. CARLSON **DATE** 02/17/2015

COMPONENT NOS.: SCUPPER 4015-0001, CRATE 4015-0002
MATERIAL: CAST GRAY IRON ASTM A-48, CLASS 35B
FINISH: NO PAINT UNLESS SPECIFIED ON PURCHASE ORDER
WEIGHT: SCUPPER 42#, GRATE 13#

DR RKB	SCALE 1/4"=1"	TITLE R-4015-A ROADWAY DRAIN	
CH			
APP	30 DIR	NEENAH FOUNDRY	NF-4015 400 B
DATE 07-24-2009		PHONE: 1-800-558-5075	
www.neenchfoundry.com			

CAD DWG REF: 4015400.DWG

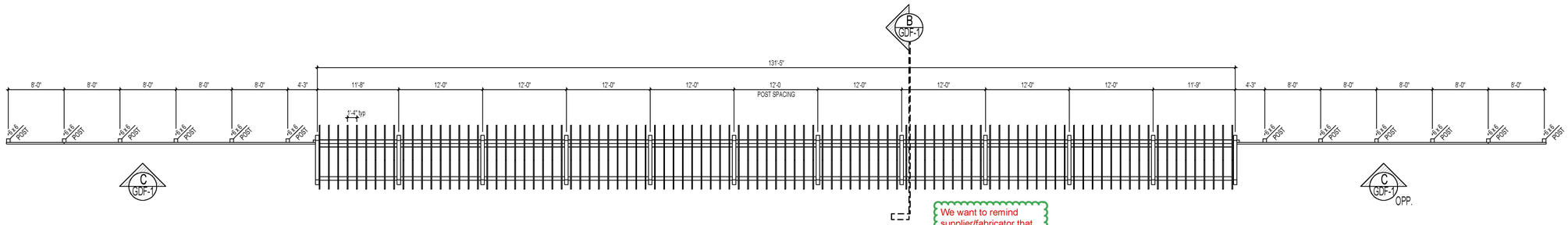

A BRIDGE FRAMING PLAN
SCALE: 1/8" = 1'-0"

We want to remind supplier/fabricator that All steel brackets, angles, and hardware needs to meet Vtrans certification requirements and the requirements of buy america.

IMPORTANT DRYING NOTE:
DRYING WOOD TO 19% MOISTURE CONTENT WILL CAUSE SHRINKAGE AND CHECKING. DRAWINGS SHOW SIZES 1/4" SMALLER THAN NOMINAL SIZE. THIS SIZE IS AN ASSUMED SHRINKAGE AND MAY VARY SLIGHTLY.

SYMBOL:
DETAIL NUMBER
<A = OPPOSITE
POSITION IN PLAN
<L> LOW / <H> HIGH
COLUMN DIMENSION
DETAIL NUMBER
W x H
12c-E
IDENTIFICATION
STRESS GRADE
DIRECTION OF ANCHOR BOLTS

LEGEND:

M.B.-	MACHINE BOLT	T.RD.-	THREADED ROD
L.S.-	LAG SCREW	N.S.-	NEAR SIDE
T.R.-	TIMBER RIVET	F.S.-	FAR SIDE
D.R.-	DRIFT PIN	B.S.-	BOTH SIDE
S.R.-	SPLIT RING	W-	WELDED CONNECTION
SH.PL.-	SHEAR PLATE	PL.-	PLATE
C.W.-	CUT WASHER	CHFR.-	CHAMFER
PL.W.-	PLATE WASHER	C.B.-	COUNTERBORE
L-	ANGLE	T.B.-	TURNBUCKLE

Vermont Agency of Transportation
RECEIVED
CK'D BY C. BURRALL OK'D BY D. PETERSON
March 5, 2015
RESUBMIT NO Approved AsNoted
BY C. CARLSON DATE 03/09/2015

CONTRACTOR, JOBSITE AND OWNER **NOTES:**

1) UNLOADING OF THE MATERIAL: ALL MATERIALS TO BE UNLOADED BY OTHERS (STEEL, HARDWARE, DECKING, GOODLAM MEMBERS OR OTHER RELATED MATERIALS). THE CONTENTS OF THE TRUCK(S) IS THE RESPONSIBILITY OF THE ON-SITE PERSONNEL. THEREFORE, SUFFICIENT MANPOWER AND PROPER EQUIPMENT MUST BE AVAILABLE ON SITE AT THE TIME OF ARRIVAL OF THE TRUCK(S). DO NOT DROP OR DRAG THE LAMINATED MATERIALS. USE CARE IN HANDLING TO PREVENT DAMAGE TO FINISHED SURFACES. SOFTINERS UNDER CHAINS OR CABLES OR WIDE WEB SLINGS ARE STRONGLY RECOMMENDED TO PREVENT DAMAGES TO THE MATERIAL BEING DELIVERED. GOODFELLOW INC. WILL NOT BE RESPONSIBLE FOR DAMAGES THAT OCCUR AT THE TIME OF UNLOADING.

2) STORAGE OF THE MATERIAL: THE GENERAL CONTRACTOR IS RESPONSIBLE FOR THE PROTECTION OF THE MATERIALS AT ALL TIMES AFTER RECEPTION OF THE SAID MATERIALS. PREVENT EXCESSIVE DRYING OR WETTING AT ALL TIMES. AVOID AT ALL TIMES OVERLOADING THE STRUCTURE BY STORING MATERIALS ON THE FLOOR AND/OR ROOF STRUCTURE (SUCH AS DECKING, SHEATING OR OTHER MATERIALS).

TO PREVENT WETTING:

A. PROTECT FROM FREE WATER SUCH AS RAIN, SNOW, DEW, SURFACE-PONDED WATER AND/OR ICE.
B. KEEP AWAY FROM MOISTURE SOURCES (EXPOSED GROUND, CONCRETE OR MASONARY FLOORS AND FRESHLY PLASTERED SURFACES).
C. MAINTAIN ORIGINAL WRAPPINGS, BUT SLIT THE UNDERSIDE TO PREVENT CONDENSATION BUILD-UP.
D. PROMOTE GOOD VENTILATION BY KEEPING PILES ADEQUATELY SEPARATED.

TO PREVENT DRYING:

A. PROTECT FROM EXCESSIVE WARM, DRY AIR CURRENTS.
B. PROTECT FROM DIRECT SUNLIGHT AND ARTIFICIAL HEAT SOURCES (PROPANE OR ELECTRIC HEATERS).
C. KEEPING ORIGINAL WRAPPINGS SEALED, EXCEPT ON THE UNDERSIDE.

WHEN THE LAMINATED OR TIMBER MATERIAL MUST BE STORED AT THE JOBSITE: USE THE SAME CARE AS WITH THE OTHER MILLWORK. PLACE BLOCKS AT LEAST 8" (200mm) OFF THE GROUND AT 4'-0" C/C (1200mm). COVER TOP AND ALL SIDES OF THE BUNDLES WITH WEATHERPROOF COVERING.

3) ERECTION: BEFORE BEGINNING ERECTION, VERIFY ALL FIELD ELEVATIONS, ANCHOR BOLT PLACEMENT, AND DIMENSIONS OF SPANS AND SPACING WITH THE ERECTION PLANS. CUTS, ABRASIONS AND BRUISES CAN BE SUSTAINED DURING ERECTION HOWEVER THESE CAN WEAKEN AND DISFIGURE THE LAMINATED OR HEAVY TIMBER MEMBERS. USE PADDED OR NON-MARRING WEB SLINGS AND PROTECT CORNERS WITH WOOD BLOCKING. LEAVE PROTECTIVE WRAPPING ON THE MEMBERS UNTIL THE DECKING OR SHEATHING IS INSTALLED. IF THE WRAPPING IS REMOVED TEMPORARILY AT CONNECTIONS, REPLACE THEM SECURELY AFTER MEMBERS ARE ERECTED. THE WRAPPING SHOULD BE SLIT AT POINTS ALONG THE LENGTH AND AT THE SOFFIT END TO PREVENT ACCUMULATION OF RAIN WATER OR ENTRAPPED CONDENSATION. MEMBERS HAVE BEEN DESIGNED AND FABRICATED TO FIT TOGETHER PROPERLY, WITHOUT CUTTING, TRIMMING OR ANY UNAUTHORIZED MODIFICATIONS. DISCREPENCIES MUST BE REPORTED TO THE PROJECT ENGINEER AND/OR ARCHITECT BEFORE ANY MODIFICATIONS ARE MADE. INCLUDED ARE SPECIAL PROCEDURES FOR THE EXPECTED ASSEMBLY PROCESSES WHICH WILL BE USED IN THESE SHOP DRAWINGS.

A. WOOD DECKING: MAKE SURE THAT THE INSTALLATION PATTERN IS RESPECTED. THE QUANTITY OF DECKING SUPPLIED IS BASED ON CALCULATIONS WHICH ARE DESIGNED WITH THE INSTALLATION METHOD DESCRIBED. REFER TO THE INSTALLATION INSTRUCTION ON THE SHOP DRAWINGS.

B. MACHINE BOLTS: THE LENGTHS ARE CALCULATED EXACTLY TO FIT THE APPLICATION. USE THE PROPER MACHINE BOLT DESCRIBED IN THE DETAILS SHOWN IN THE SHOP DRAWINGS. DO NOT OVER TIGHTEN THE BOLTS. THEY SHOULD BE INSTALLED AS A "TIGHT FIT". DO NOT USE ELECTRIC OR AIR IMPACT WRENCHES. AVOID COMPRESSING THE WOOD FIBERS WITH THE STEEL PLATES OR METAL WASHERS. THIS WILL DAMAGE THE WOOD MEMBERS AND CAN AFFECT THE STRUCTURAL STRENGTH OF THESE MEMBERS.

C. LAG SCREWS: THE LAG SCREWS MUST BE INSTALLED WITH A HAND HELD WRENCH, NOT WITH AN ELECTRIC OR AIR IMPACT WRENCH. SOAP OR NON-PETROLEUM-BASED LUBRICANT MAY BE USED TO EASE THE LAG SCREW INSERTION. THE INSTALLATION INSTRUCTION MUST BE STRICTLY FOLLOWED, OR THE LOAD-CARRYING CAPACITY OF THE LAG SCREW WILL BE COMPROMISED.

D. TIMBER RIVETS: TIMBER RIVETS ARE DRIVEN WITH A HAMMER OR SMALL SLEDGEHAMMER UNTIL THE TAPERED HEAD IS FIRMLY SEATED IN THE PRE-DRILLED HOLES IN THE STEEL SIDE PLATES WHILE MAINTAINING A MINIMUM 1/8" (2mm) HEAD PROJECTION ABOVE THE PLATE (SEE THE INSTALLATION PROCEDURE SHOWN IN THESE SHOP DRAWINGS). CARE SHOULD BE TAKEN TO ENSURE THAT THE CONNECTIONS IS CORRECTLY PLACED, AS A COMPLETED CONNECTION IS EXTREMELY DIFFICULT TO REMOVE. DRIVE THE RIVETS IN A SPIRAL CLOCKWISE METHOD. SAFETY GLASSES SHOULD BE WORN TO GUARD FROM PARTICLES OF THE GALVANIZING COATING AND BECAUSE THE HARDENED RIVET CAN BREAK IF STRUCK THE WRONG WAY.

E. IN THE CASE OF UNFAMILIAR CONNECTION METHODS, CONTACT THE ENGINEERING DEPARTMENT OF GOODFELLOW INC. FOR INSTALLATION PROCEDURES.

4) PROBLEMS: IN CASE OF FABRICATION ERRORS OR MATERIAL DEFECT, IMMEDIATELY NOTIFY OUR NEAREST SALES OFFICE. GOODFELLOW INC. RESERVES THE RIGHT TO INVESTIGATE AND CORRECT ALLEDGE ERRORS AND/OR DEFECTS. IN THE CASE OF JOBSITE CONSTRUCTION ERRORS, CONTACT THE ENGINEERING DEPARTMENT OF GOODFELLOW.

5) MINOR MISFITS AND/OR CORRECTIONS: CORRECTION OF MINOR MISFITS AND A REASONABLE AMOUNT OF DRILLING, CUTTING, REAMING OR RE-ALIGNMENT OF DRIFT PINS. BOLTS OR LAG SCREWS WILL BE CONSIDERED A REGULAR PART OF ERECTION AT NO ADDITIONAL COST TO GOODFELLOW INC. IF ANY CORRECTION IS NEEDED LARGER THAN THE INDUSTRY STANDARD, CONTACT YOUR CLOSEST SALES OFFICE OR THE ENGINEERING DEPARTMENT OF GOODFELLOW INC.

6) SPECIAL CONSIDERATION SHOULD BE MADE TO ALLOW FOR NORMAL DEFLECTION OF THE STRUCTURE. USE SLIP JOINTS WHERE GLASS FRAMING IS CLOSE TO THE WOOD STRUCTURE. VERIFY THAT THE DEFLECTION CRITERIAS REFLECT THE APPLICATION OF THE SURROUNDING MATERIALS.

7) REFER TO THE ARCHITECTURAL/ENGINEERING DRAWINGS AND SPECIFICATIONS FOR ANY ADDITIONAL OR OVERRIDING INSTRUCTIONS TO THE PRECEDING INFORMATION.

8) GOODFELLOW INC. IS NOT RESPONSIBLE FOR THE DESIGN OR SUPPLY OF THE TEMPORARY SHORING AND/OR TEMPORARY BRACING OF THE STRUCTURE DURING ERECTION. THE CONTRACTOR OR ERECTOR IS RESPONSIBLE FOR THE SAFE AND PROPER DESIGN AND INSTALLATION OF THE TEMPORARY SHORING AND/OR BRACING. THE STRUCTURAL MEMBERS SHOWN IN THESE SHOP DRAWINGS ARE NOT SELF BRACING AND MUST BE CONSIDERED UNSTABLE UNTIL THE ENTIRE COMPLETED STRUCTURE IS ERECTED WITH ALL THE MEMBERS AND DECKING OR SHEATHING GOODFELLOW INC. WILL NOT BE HELD RESPONSIBLE FOR DAMAGES OR INCIDENTS THAT OCCUR DURING THE ERECTION OF THE STRUCTURE. ACCEPTANCE OF THESE SHOP DRAWINGS IS THE PROOF THAT THE CONTRACTOR ACCEPTS ALL THE ABOVE MENTIONED ITEMS.

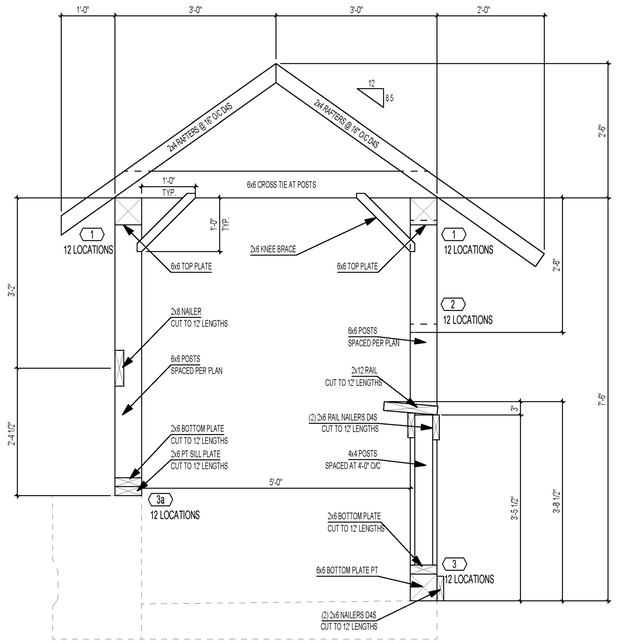

B BRIDGE FRAMING SECTION
SCALE: 3/4" = 1'-0"

NOTE:
Rafter connections to be as shown on sheets 34 and 35 of Vermont Agency of Transportation drawings. Goodfellow to 2x4 supply rafters without fabrication. Fasteners (nails, screws etc.) are the responsibility of others.

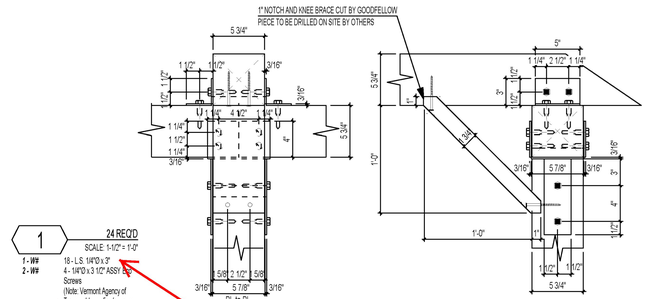

1 24 REQ'D
SCALE: 1-1/2" = 1'-0"
1 - W#
2 - W#
18 - L.S. 1/4"D x 3"
4 - 1/4"D x 3 1/2" ASSY Eco Screws
(Note: Vermont Agency of Transport to confirm/approve size and type.)

Please verify 18 bolts. It seems like there should be 20.

Please provide more information regarding screws like cut sheets showing the material, coating, and whether it meets Buy America.

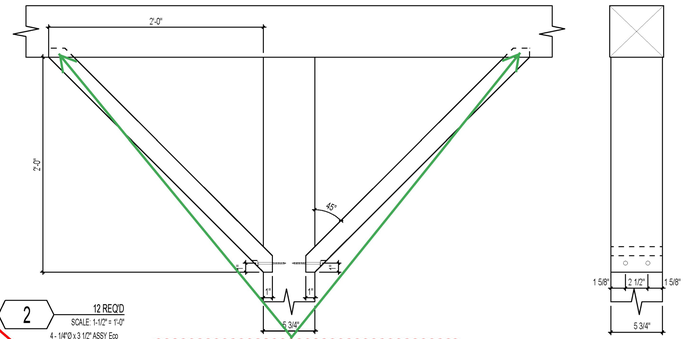

2 12 REQ'D
SCALE: 1-1/2" = 1'-0"
4 - 1/4"D x 3 1/2" ASSY Eco Screws
(Note: Vermont Agency of Transport to confirm/approve size and type.)

There should be 2 screws at each of knee brace resulting 4 total screws per knee brace. Therefore for this detail there should be a grand total of 8 screws

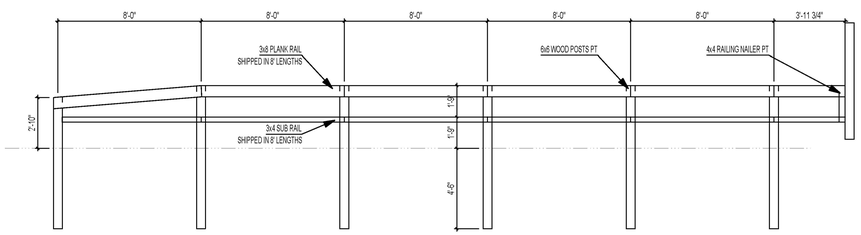

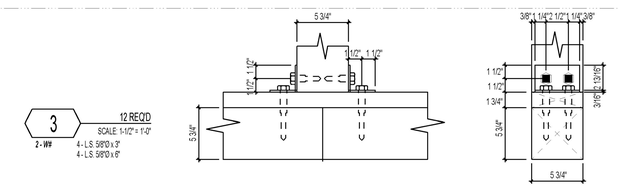

3 12 REQ'D
SCALE: 1-1/2" = 1'-0"
2 - W#
4 - L.S. 5/8"D x 3"
4 - L.S. 5/8"D x 6"

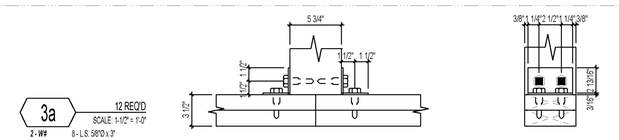

3a 12 REQ'D
SCALE: 1-1/2" = 1'-0"
2 - W#
8 - L.S. 5/8"D x 3"

FOR APPROVAL
NOT FOR CONSTRUCTION

#3	----------	----------	
#2	FOR REVIEW & APPROVAL	4 March 2015	JR
#1	FOR REVIEW & APPROVAL	10 February 2015	JR
REV.#	DESCRIPTION	DATE	BY

GOODFELLOW
THE WOOD SPECIALIST
www.goodfellowinc.com
DIVISION GOODLAM
225 Rue Goodfellow
Delson, Quebec
Tel.: (450) 635-6511
Fax: (450) 635-8304
ISO 9001:2008
ISO 9001:2008; BS EN ISO 9001:2008; ANSI/ASQ Q9001:2008

CLIENT:
CCS Constructors
PROJECT NAME:
Spruce Peak Bridge
DRAWING TITLE
ERECTION DRAWINGS - PLANS
Drawn By: JR | Verified By: AC | GDF-1
Project no.: 1415-032-U /// G-40856

This drawing is the property of GOODFELLOW and must not be used or copied without their written permission.
WARNING: GOODFELLOW is not responsible for the design check of the components shown on this drawing with respect to the application of erection forces.

HEAVY TIMBER SPECIFICATION

SPECIES: EASTERN SPRUCE (TREATED CCA WHERE INDICATED)	
STRESS GRADE: NO.1 AND BETTER	
APPEARENCE GRADE: ROUGH U.N.O.	
SPECIAL NOTE #1: TIMBER SURFACE DRIED TO 19% (SEE DRYING NOTE)	
BUNDLE WRAPPED	NO SHOP APPLIED STAIN

CONNECTING STEEL SPECIFICATION

CONNECTION SPEC.:	A36 (CSA G40.21M - 300W) (meets or exceeds ASTM A36-36)
WELDING IN ACCORDANCE WITH AWS D1.1	
CONNECTING HARDWARE SPEC.:	ASTM-A-307 U.N.O.
COATING: GALVANIZED	

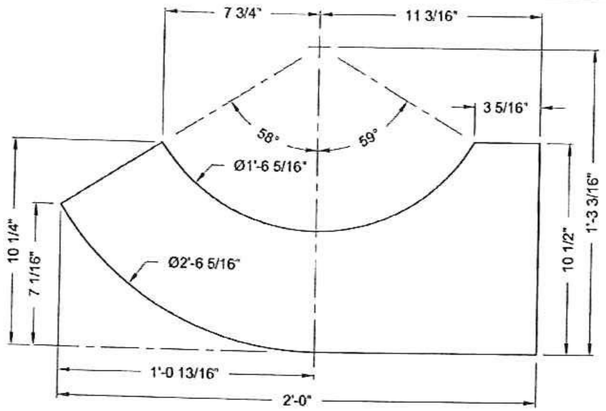

DETAIL ITEM 1

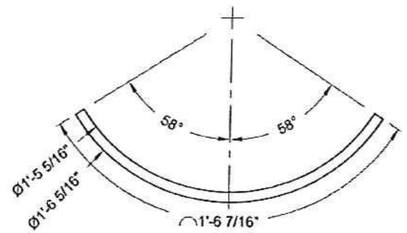

DETAIL ITEM 2

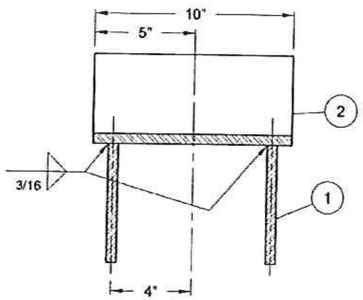

SECTION B-B

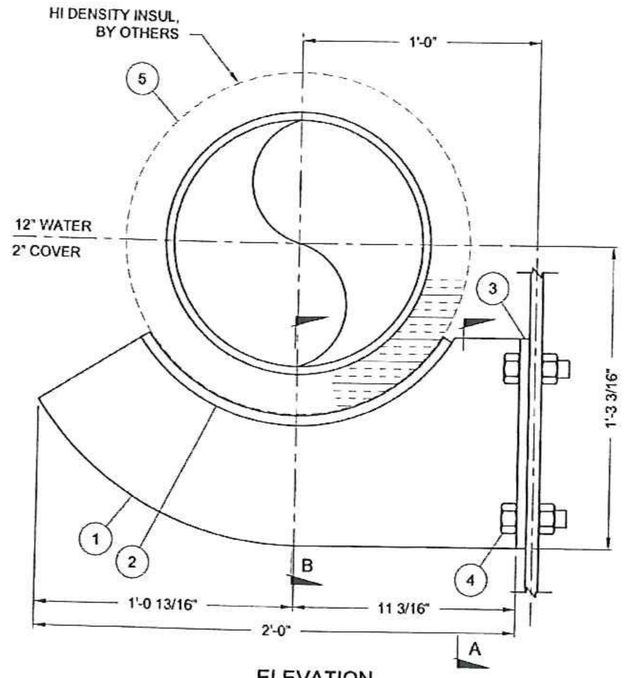

ELEVATION

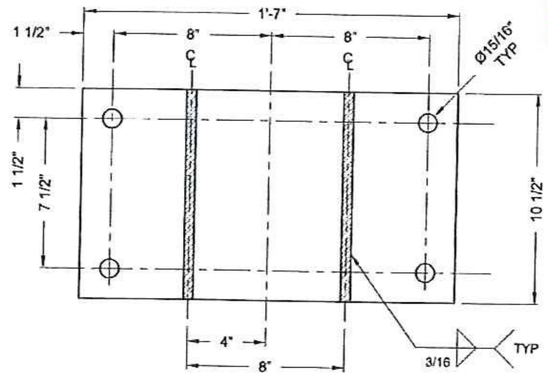

SECTION A-A

ITEM NO.	QTY.	DIG NO.	DESCRIPTION	FIN.	MATL.
1	2	---	PL1/2", AS SHOWN	G	A36
2	1	---	PL1/2", ROLLED AS SHOWN, WIDTH=10"	G	A36
3	1	---	PL1/2", AS SHOWN	G	A36
4	4	---	Ø7/8" x 1 1/2" LG. BOLT & HEX NUT, A325 - TYPE 3	--	A325
5	1	170	SIZE 21B, 360° INSUL. SHIELD, SS STRAPS BY OTHERS	G	CS

PIPE SIZE/SYSTEM:	12" WATER	REFERENCE DRAWINGS.
PIPE MATERIAL:	DI	1.
DEADWEIGHT LOAD (LB), Fy:	---	2.

NOTES:

1. WELDING SHALL BE IN ACCORDANCE WITH AWS D1.1

G= GALVANIZED
P= RED OXIDE
B= BLACK

Vermont Agency of Transportation

RECEIVED

CK'D BY D. PETERSON OK'D BY C. CARLSON

February 20, 2015

RESUBMIT NO Approved

BY C. CARLSON DATE 03/04/2015

REV	DATE	DESCRIPTION	BY	CHK	APV
A	2-5-15	FOR APPROVAL	JRK	---	

NEWMAN ASSOCIATES
CANTON, MA

PIPE SUPPORT

STOWE
VAOT STOWE BRF 0235 (11)

QTY: 14

CUSTOMER:	FERGUSON WATERWORKS
SUPPORT NO:	PS-01
	SHT. 1 OF 1

FERGUSON
a WOLSELEY company
429 Troy Avenue • Colchester, VT 05446
Phone: 802-655-3505 • Fax: 802-655-7943
www.ferguson.com

Nobody expects more from us than we do℠

INSULATION SHIELDS

Fig. 170 INSULATION PROTECTION SHIELD

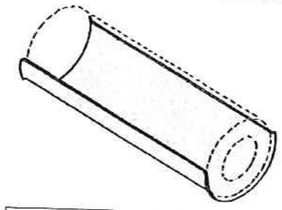

Note: 12" (304.8mm) length shields furnished with flared ends.

FUNCTION: Designed for use in the suspension of insulated pipe lines to protect the insulation from being crushed by the hanger.

APPROVALS: Complies with Federal Specifications A-A-1192A (Type 40) and Manufacturers' Standardization Society ANSI/SP-69 and SP-58 (Type 40).

MATERIAL: Low Carbon Steel

FINISH: Pre-galvanized

ORDERING: Specify shield number and figure number.

Available in stainless steel. To order, specify 304 or 316 and add suffix SS to figure number.
Price on request.

Size No.	Shield I.D.		Shield Gauge	Shield Length		Hanger Size		Wt. Each lbs.	Wt. Each kg
1A	2 3/8	(60.33)	18	12	(304.80)	2	(50)	.55	(25)
2A	2 5/8	(66.68)	18	12	(304.80)	2 1/2	(65)	.64	(29)
3A	2 7/8	(73.03)	18	12	(304.80)	2 1/2	(65)	.66	(30)
4A	3 1/2	(88.90)	18	12	(304.80)	3	(80)	.89	(.40)
5A	4	(101.60)	18	12	(304.80)	3 1/2	(90)	.91	(41)
6A	4 1/2	(114.30)	18	12	(304.80)	4	(100)	1.12	(51)
7A	5	(127.00)	18	12	(304.80)	5	(125)	1.15	(52)
8A	5 5/8	(142.88)	18	12	(304.80)	5	(125)	1.35	(61)
8B	5 5/8	(142.88)	16	12	(304.80)	5	(125)	2.00	(91)
9A	6	(152.40)	18	12	(304.80)	6	(150)	1.45	(66)
9B	6	(152.40)	16	12	(304.80)	6	(150)	2.10	(95)
10A	6 5/8	(168.28)	18	12	(304.80)	6	(150)	1.50	(68)
10B	6 5/8	(168.28)	16	12	(304.80)	6	(150)	2.37	(1.08)
11A	7 5/8	(193.68)	18	12	(304.80)	8	(200)	2.02	(92)
11B	7 5/8	(193.68)	16	12	(304.80)	8	(200)	2.50	(1.13)
11C	7 5/8	(193.68)	16	18	(457.20)	8	(200)	3.75	(1.70)
12A	8 5/8	(219.08)	18	12	(304.80)	8	(200)	2.28	(1.03)
12B	8 5/8	(219.08)	16	12	(304.80)	8	(200)	2.83	(1.28)
12C	8 5/8	(219.08)	16	18	(457.20)	8	(200)	4.25	(1.93)
13A	9 5/8	(244.48)	18	12	(304.80)	10	(250)	2.54	(1.15)
13B	9 5/8	(244.48)	16	12	(304.80)	10	(250)	3.15	(1.43)
13C	9 5/8	(244.48)	16	18	(457.20)	10	(250)	4.73	(2.15)
14A	10 3/4	(273.05)	18	12	(304.80)	10	(250)	2.84	(1.29)
14B	10 3/4	(273.05)	16	12	(304.80)	10	(250)	3.53	(1.60)
14C	10 3/4	(273.05)	16	18	(457.20)	10	(250)	5.30	(2.40)
14D	10 3/4	(273.05)	14	24	(609.60)	10	(250)	9.63	(4.37)
15B	11 3/4	(298.45)	16	12	(304.80)	12	(300)	4.00	(1.81)
15C	11 3/4	(298.45)	16	18	(457.20)	12	(300)	6.00	(2.72)
15D	11 3/4	(298.45)	14	24	(609.60)	12	(300)	10.00	(4.54)
16B	12 3/4	(323.85)	16	12	(304.80)	12	(300)	4.18	(1.90)
16C	12 3/4	(323.85)	16	18	(457.20)	12	(300)	6.28	(2.85)
16D	12 3/4	(323.85)	14	24	(609.60)	12	(300)	10.90	(4.94)
17B	14	(355.60)	16	12	(304.80)	14	(350)	4.58	(2.08)
17D	14	(355.60)	14	24	(609.60)	14	(350)	12.25	(5.56)
18B	15	(381.00)	16	12	(304.80)	16	(400)	4.90	(2.22)
18D	15	(381.00)	14	24	(609.60)	16	(400)	13.00	(5.90)
19B	16	(406.40)	16	12	(304.80)	16	(400)	5.20	(2.35)
19D	16	(406.40)	14	24	(609.60)	16	(400)	13.81	(6.26)
20B	17	(431.80)	16	12	(304.80)	18	(450)	5.53	(2.51)
20D	17	(431.80)	14	24	(609.60)	18	(450)	14.56	(6.60)
21B	18	(457.20)	16	12	(304.80)	18	(450)	6.20	(2.81)
21D	18	(457.20)	14	24	(609.60)	18	(450)	15.45	(7.01)
21E	18	(457.20)	12	24	(609.60)	18	(450)	21.25	(9.64)
22B	19	(482.60)	16	12	(304.80)	20	(500)	6.50	(2.95)
22D	19	(482.60)	14	24	(609.60)	20	(500)	16.32	(7.40)
22E	19	(482.60)	12	24	(609.60)	20	(500)	22.41	(10.17)
23B	20	(508.00)	16	12	(304.80)	20	(500)	7.25	(3.29)
23D	20	(508.00)	14	24	(609.60)	20	(500)	17.18	(7.79)
23E	20	(508.00)	12	24	(609.60)	20	(500)	24.75	(11.23)
24B	21	(533.40)	16	12	(304.80)	24	(600)	7.30	(3.31)
24E	21	(533.40)	12	24	(609.60)	24	(600)	24.75	(11.23)
25B	22	(558.80)	16	12	(304.80)	24	(600)	7.60	(3.45)
25E	22	(558.80)	12	24	(609.60)	24	(600)	25.92	(11.76)
26B	23	(584.20)	16	12	(304.80)	24	(600)	7.75	(3.52)
26E	23	(584.20)	12	24	(609.60)	24	(600)	26.50	(12.02)
27B	24	(609.60)	16	12	(304.80)	24	(600)	8.00	(3.63)
27E	24	(609.60)	12	24	(609.60)	24	(600)	27.20	(12.34)
28E	26	(660.40)	12	24	(609.60)	30	(750)	28.00	(12.70)
29E	27	(685.80)	12	24	(609.60)	30	(750)	30.20	(13.70)
30E	28	(711.20)	12	24	(609.60)	30	(750)	32.50	(14.74)

Note: To determine proper size consult shield selection guide on page 28.

Unless otherwise specified, all dimensions on drawings and in charts are in inches and dimensions shown in parentheses are in millimeters.

PHD Manufacturing, Inc.

Vermont Agency of Transportation

RECEIVED

CK'D BY D. PETERSON OK'D BY C. CARLSON

February 20, 2015

RESUBMIT NO Approved

BY C. CARLSON DATE 03/04/2015

FERGUSON a WOLSELEY company
429 Troy Avenue • Colchester, VT 05446
Phone: 802-655-3505 • Fax: 802-655-7943
www.ferguson.com

Nobody expects more from us than we do℠

Unclassified Channel Excavation

$\left(\frac{0+1.8}{2}\times 1.2\right)+\left(\frac{1.8+1.3}{2}\times 1.0\right)+\left(\frac{1.3+2.9}{12}\times 2.3\right)+\left(\frac{2.0+2.7}{2}\times 8.1\right)+\left(\frac{2.7+0}{2}\times 1.3\right)=27.035\ ft^2$

0.9 | 1.55 | 3.795 | 19.035 | 1.765

KAK 6-22-15

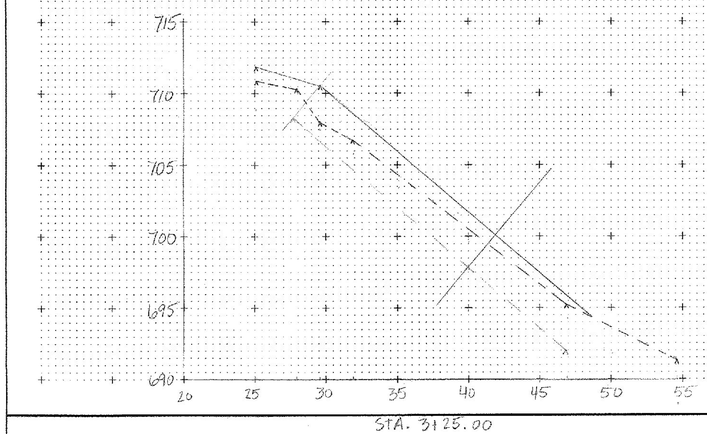

STA. 3+25.00

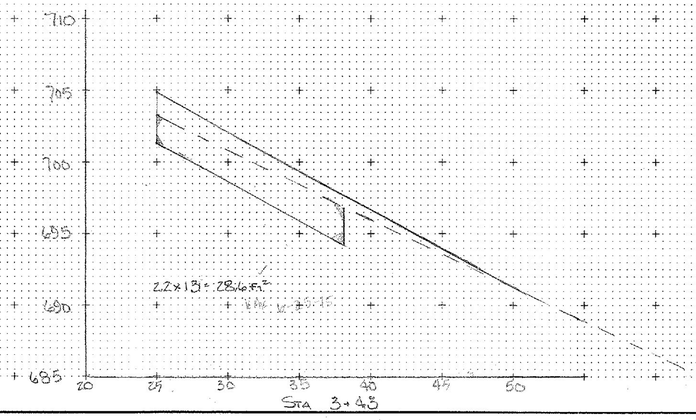

2.2×13 = 28.6 ft²

KAK 6-22-15

Sta 3+45

Sta 4+70 0

4+80.6 10.6 15 79.5

4+81.6 1 15 15.0

4+95.4 11.8 123 141.1

255.6 ft²/9 = 9.5 cy WEE 6-23-15

KAK 6-23-15

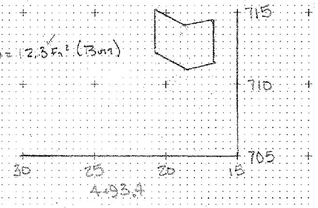

4.1×3.0 = 12.3 ft² (3m)

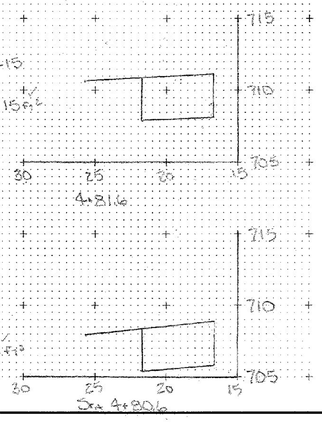

3.0×5.0 = 15 ft²

3.0×5.0 = 15 ft²

Sta 4+70. Zero Unclass

Sta 3+11.0 (ft)

Sta 3+25.0 14 11.7 278.9 ft²

Sta 3+30.2 5.2 27.0 260.0

Sta 3+43 12.8 73.0 655.2

28.6

1181.1 ft²/27 = 43.7 cy WEE 6-23-15

KAK 6-23-15

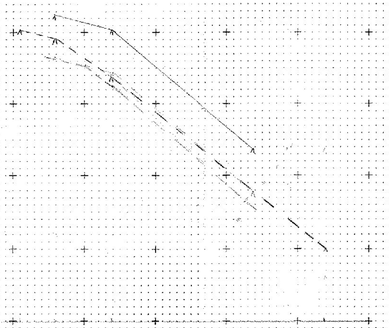

STA. 3+11.00

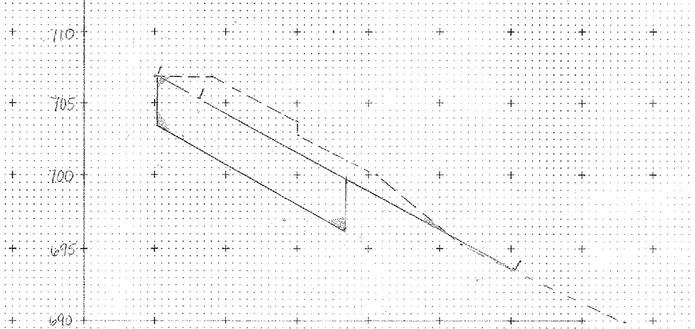

STA. 3+30.23

$(3.5\times\frac{5.5}{2}\times 2.2)+(\frac{5.5+3.7}{2}\times 6)(\frac{4.7+5.0}{2}\times 3.4)+(1.7\times\frac{2.5}{2}\times 2.0)(\frac{1.5+3.0}{2}\times 5)=73\ ft^2$

17.1 33.6 4.5 2.5 3.25

KAK 6-15-15

Zero Unclass @ 3+60

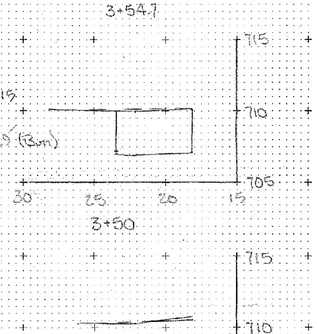

$\frac{2.1+1.0}{2}\times 5.3 = 8.2\ ft^2$

3+50 15.9 47 56.6

3+54.7 8.2 53

3+60 0 21.7

78.3/27 = 2.9 cy WEE 6-23-15

KAK 6-23-15

3.0×5.3 = 15.9 ft² (3m)

Unclassified Channel Excavation (ignore red line, use green line)

$\left(\frac{1.8+0.5}{2}\times 2.2\right)+\left(\frac{0.5+1.1}{2}\times 11.9\right)=11.72\ ft^2$

KAK 6-22-15

KAK 6-23-15

Plotted By KAK 6-22-15

PLAN & PROFILE SHEET

PROJECT NAME: STOWE

PROJECT NUMBER: BRF 0235(11)

FILE NAME: _____ PLOT DATE: 12-MAY-2005 16:0

PROJECT LEADER: _____ DRAWN BY: _____

DESIGNED BY: _____ CHECKED BY: _____

const: g:/common/cadd/e-xsection.dgn SHEET ____ OF ____

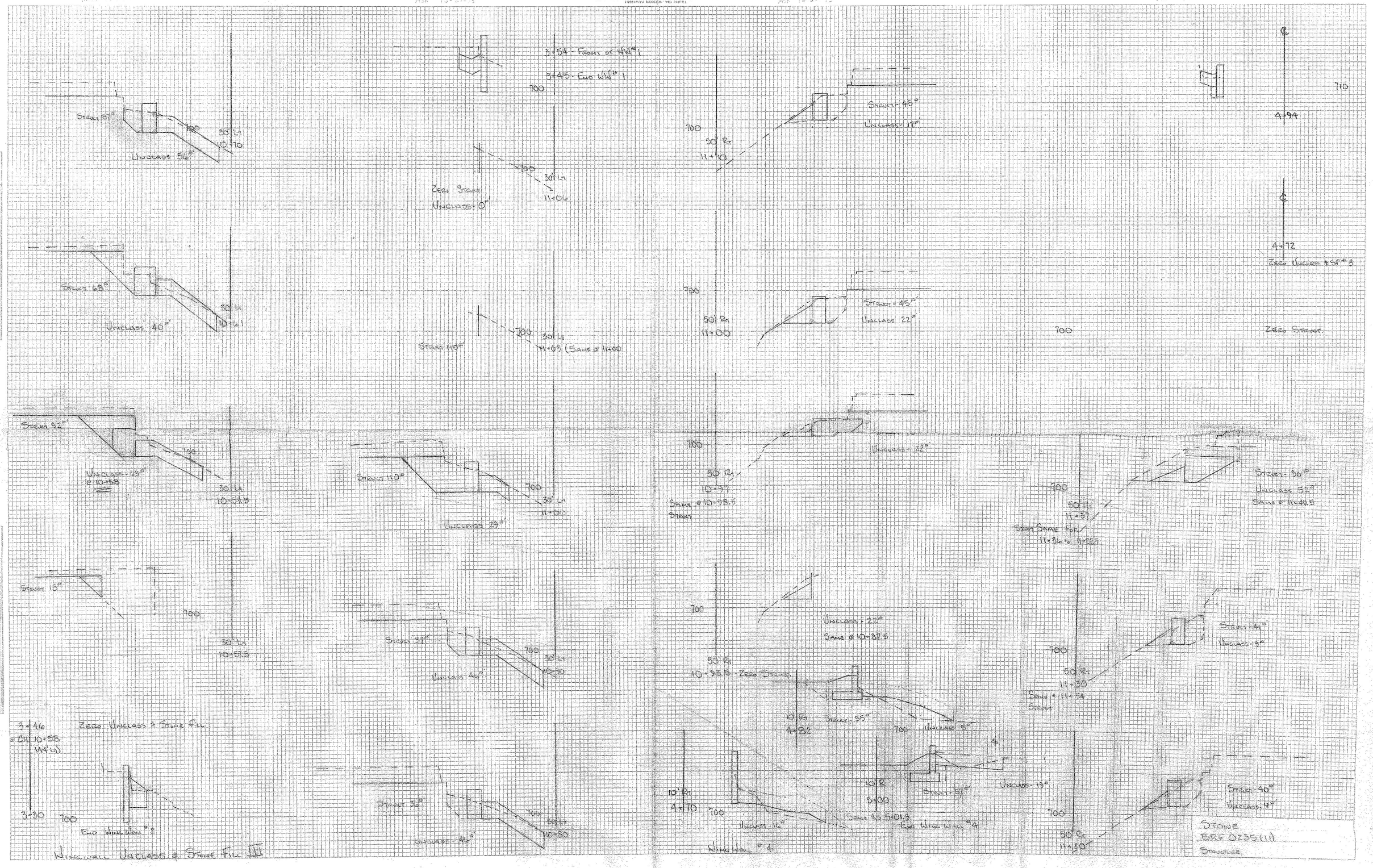

3+54 - Front of WW#1
3+45 - End WW#1
Struct 37°
Unclass 56°
Zero Struct
Unclass 0°
Struct 45°
Unclass 17°
Struct 68°
Unclass 40°
Struct 110°
Struct 45°
Unclass 22°
Zero Unclass & SF#3
Zero Struct
Struct 52°
Unclass 63°
Struct 110°
Unclass 29°
Unclass 22°
Struct 50°
Unclass 52°
Struct 15°
Struct 37°
Unclass 46°
Unclass 22°
Same @ 10+87.5
Struct 41°
Unclass 9°
Zero Unclass & Stone Fill
Struct 36°
Unclass 46°
Struct 55°
Unclass 5°
Struct 57°
Unclass 19°
Struct 40°
Unclass 9°
Wing Wall #4
Stone
BRF 0235(11)
Structure

HIGH STEEL STRUCTURES, INC.
A Division of High Industries, Inc.

2
2015-01-13

TRANSMITTAL

TO: **CCS Constructors LLC**
138 Munson Avenue
Morrisville, VT 05661

HSSI NUMBER
VT-1140166A-1

RE: BRF 0235 (11)
Vt. Rte. 108 over Little River, Town of Stowe, Lamoille Coun

ATTN: **Brian Richardson**

We are sending you the following Via: **Electronic Transfer - Resubmit For Approval**

Drawing Numbers	Description	Rev
WS1	WORKSHEET - CALCULATION PLAN	1
E1	ERECTION FRAMING PLAN	1
X1	GIRDER JOB STANDARDS	1
GN1	GENERAL SHOP NOTES	1
1-5	Girder	1
6	Crossframe	1

Vermont Agency of Transportation
RECEIVED
Structural Steel_Approved 1.23.15.pdf

CK'D BY CLB OK'D BY DRP
January 23, 2015
RESUBMIT NO Approved
BY C. CARLSON DATE 01/23/15

IF ENCLOSURES ARE NOT AS NOTED, PLEASE NOTIFY US AT ONCE.
Please acknowledge receipt by signing and returning one copy of this transmittal.

By: _____ **Date:** _____

CC: FILE

PER: Andrew Hoff

FOR: Dave Painter
Engineering Department
(717) 209-4622
dpainter@high.net

ENGLISH

Scale = 0.013 Feet/Foot

SHIPMENT #1 PHASING 5833224 PROJ 5833235 SHEPARECT = 5833235

BY: rkowalski

PLOTTED: 1/12/2015 07:56:01 PM

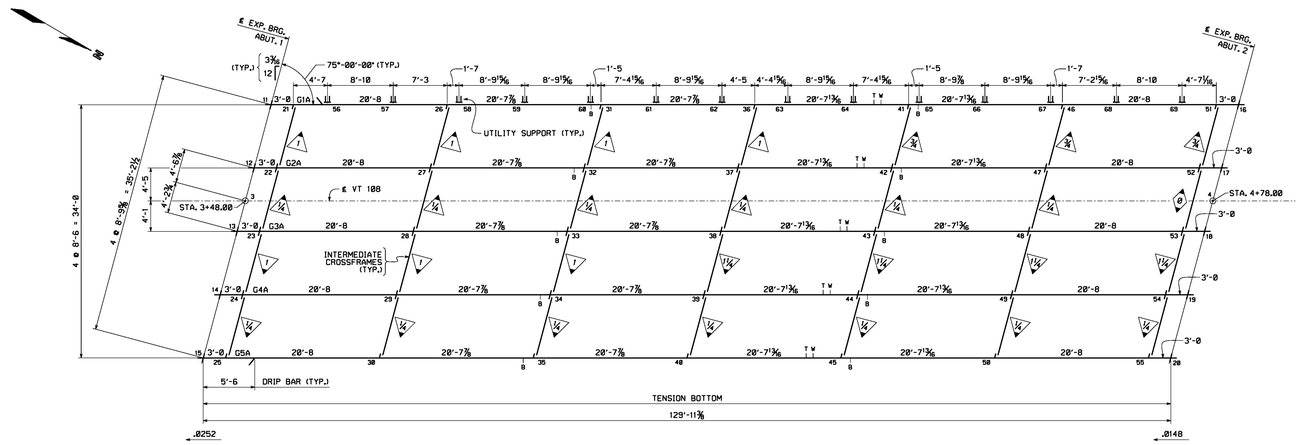

CALCULATION PLAN

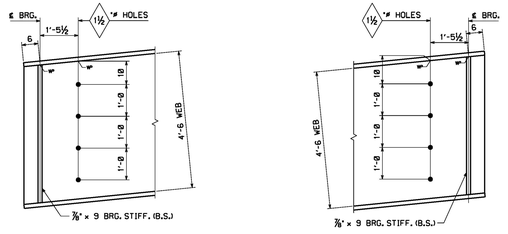

TYPICAL GIRDER END @ ABUT. 1

TYPICAL GIRDER END @ ABUT. 2

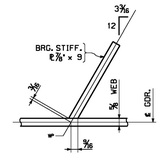

SKEWED BRG. STIFF. LAYOUT

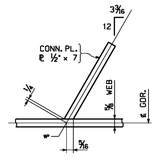

SKEWED CONN. PL. LAYOUT

NOTES:

DIMENSIONS ON PLAN ALONG GIRDERS ARE GIVEN TO THE CHORD AT THE BOTTOM OF WEB IN FULLY CAMBERED POSITION. ALL OTHER DIMENSIONS ARE GIVEN HORIZONTALLY.
DIMENSIONS PLACED ON THE GIRDER LINES REPRESENT CROSSFRAME SPACING.
FIGURES GIVEN THUS: ⌀252 ARE THE GRADES OF THE GIRDERS AT THE BEARINGS IN FINAL POSITION; ARROW POINTS DOWNGRADE.
ALL STIFFENER AND CONNECTION PLATE SPACINGS ARE GIVEN TO ℄ PLATE.
ENDS OF GIRDERS AND ALL BEARING STIFFENERS TO BE VERTICAL IN FINAL POSITION.
ALL STEEL TO BE AASHTO M270, GRADE 50W (U.N.).
ALL FIELD CONNECTIONS TO BE MADE WITH ⅞" H.S. (A325 TYPE 3) BOLTS IN 15/16" HOLES. (U.N.).
FIGURES GIVEN THUS: △ ARE THE DIFFERENCES IN ELEVATIONS OF GIRDERS (IN THE PLANE OF THE CROSSFRAME IN FINAL POSITION) AT CROSSFRAMES; ARROW POINTS TOWARD LOW GIRDER.
FOR TYPICAL DETAIL LAYOUTS, SEE DRAWINGS PREFIXED "TD".
MARKS GIVEN THUS: W T 1.5 REPRESENT WEB & FLANGE SHOP SPLICE LOCATIONS.
△ ALL BOLTED CONNECTIONS REQUIRE DTI WASHERS.

NOTE
THE PURPOSE OF THIS DRAWING IS TO COORDINATE GEOMETRIC CONTROL INFORMATION. THIS DRAWING IS SUBMITTED FOR INFORMATION ONLY AND IS NOT INTENDED FOR SHOP FABRICATION. THIS DRAWING IS FOR REFERENCE ONLY, APPROVAL IS NOT REQUIRED.

Vermont Agency of Transportation

RECEIVED

Structural Steel_Approved 1.23.15.pdf

CK'D BY CLB OK'D BY DRP

January 23, 2015

RESUBMIT NO Approved

BY C. CARLSON DATE 01/23/15

CROSSMEMBER DROPS AND POINT TO POINT DIMENSIONS
MADE BY: SSL
CHECKED BY: MAF

NO.	REVISION	BY	CHK'D	DATE
1				
2				
3	DETAIL ERROR: ADDED DTI WASHER NOTE.	MJD	MGK	1/12/15

HOLES
BOLTS
COATING
CODE(S)
SCALE N.T.S.

HIGH STEEL STRUCTURES, LLC
An AISC 9004:2000 Certified Company
An Affiliate of High Industries Inc.

Schaghticoke Facility
1915 Old Rte. 40 PO Box 1000
Schaghticoke, NY 12154-1000
Phone: (518) 753-7611

Williamsport Facility
1500 W. 4th St. PO Box 1000
Williamsport, PA 17703-1000
Phone: (570) 326-5091
www.highsteel.com

WORKSHEET - CALCULATION PLAN
VT RT 108 OVER LITTLE RIVER
VT RT 108 STA. 3+48.00 TO STA. 4+78.00
TOWN OF STOWE, LAMOILLE COUNTY, VERMONT
STATE OF VERMONT
AGENCY OF TRANSPORTATION

STATE CONT. OR REF. NO.	BRF 0235 (11)	FED. AID PROJ. NO.	
GENERAL CONTRACTOR	CCS CONSTRUCTORS LLC	HSS PROJ. MGR	KEN GLIDDEN
DRAWING MANAGER	DAVE PAINTER (IH)	MADE BY	KLW
CHK'D BY	EMA	DATE	10/15/14
HSS PROJECT NUMBER	S-1140166A-1	DRAWING NUMBER	WS1 OF WS1

VT

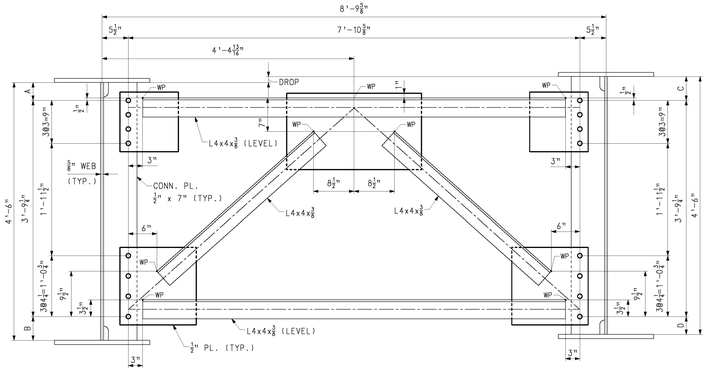

INTERM. CROSSFRAME LAYOUT
(LOOKING BACK STATIONS)

DROP	A	B	C	D
1½	3½	5	5	3½
1"	4	4½	5	3½
¼	4½	4	5	3½
0"	5	3½	5	3½
(−)¼	5	3½	4½	4
(−)½	5	3½	4½	4½
(−)1"	5	3½	4	4½

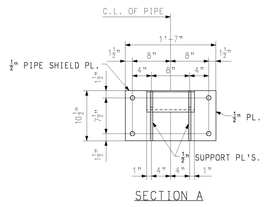

SECTION A

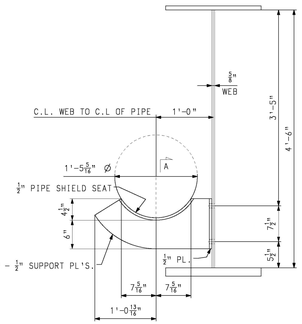

UTIL. BRACKET LAYOUT
(LOOKING STATIONS AHEAD
ON G1 FASCIA)

WORK THIS DRAWING WITH DRAWING WS1.
FOR NOTES, SEE DRAWING WS1.

NOTE
THE PURPOSE OF THIS DRAWING IS TO COORDINATE GEOMETRIC CONTROL INFORMATION. THIS DRAWING IS SUBMITTED FOR INFORMATION ONLY AND IS NOT INTENDED FOR SHOP FABRICATION. THIS DRAWING IS FOR REFERENCE ONLY. APPROVAL IS NOT REQUIRED.

Vermont Agency of Transportation
RECEIVED
Structure Steel_Approved 125 14.pdf
CK'D BY CLB OK'D BY DRP
November 25, 2014
RESUBMIT NO Approved
BY C. CARLSON DATE 12/5/14

NO.	REVISION	BY	CHK'D	DATE

HOLES 13/16" Ø
BOLTS
COATING
CODE (S):
SCALE N.T.S.

HIGH STEEL STRUCTURES INC.
An ISO 9001:2000 Certified Company
An ATI Unit of High Industries Inc.
905 Old Philadelphia Pike
Lancaster, PA 17606-0008
Phone (717) 299-5211
www.highsteel.com

TYPICAL DETAILS - CROSSFRAME & UTILITY SUPPORT LAYOUT
VT RT 108 OVER LITTLE RIVER
VT RT 108 STA. 3+48.00 TO STA. 4+78.00
TOWN OF STOWE, LAMOILLE COUNTY, VERMONT
STATE OF VERMONT
AGENCY OF TRANSPORTATION

STATE CONT. OR REF. NO.	BRF 0235 (11)	FED. AID PROJ. NO.	
GENERAL CONTRACTOR	CCS CONSTRUCTORS LLC	HSS PROJ. MGR	KEN GLIDDEN
DRAWING MANAGER	DAVE PAINTER (IH)	MADE BY	MAF
HSS PROJECT NUMBER	S-1140166A-1	DRAWING NUMBER	TD1 OF TD1

CHK'D BY MGK DATE 11/12/14

VT

SHIPMENT 1 PAGE#01 SO2562A PRD1 SO2562A SHIPASPECT1 SO2562A
PLOTTED: MM/DD/YY hh:mm:ss BY: XXXXXXXX

ENGLISH

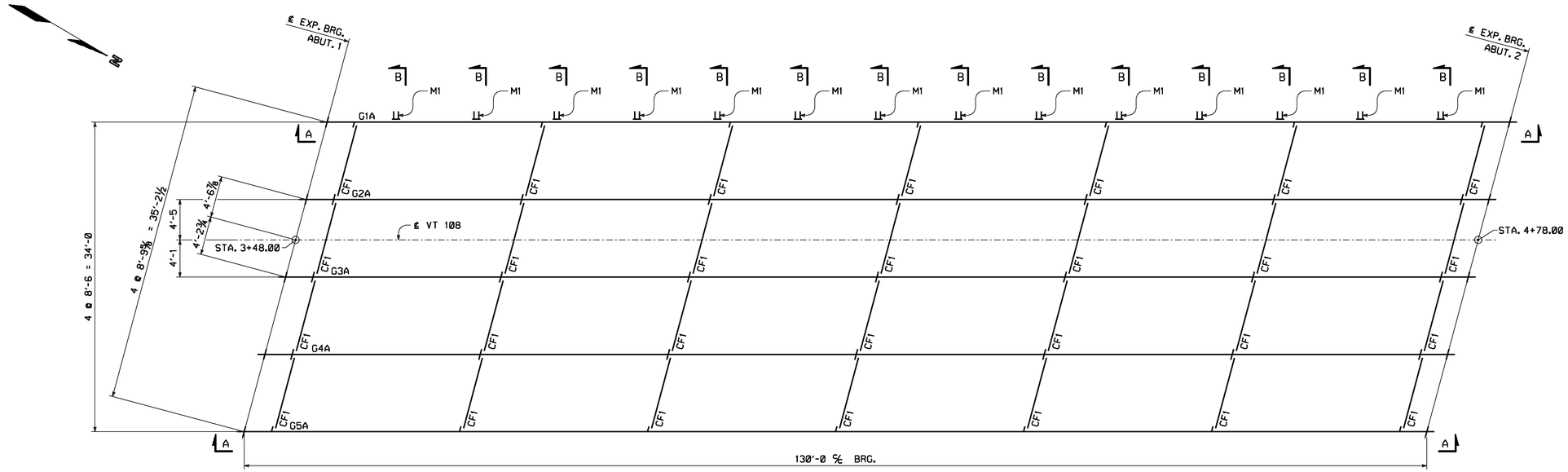

ERECTION FRAMING PLAN

SHIPPING GROUP A1	
SHIPPING PIECE MARK	QUANTITY
G1A	1
G2A	1
G3A	1
G4A	1
G5A	1
CF1	28
M1	14

SHIPPING PIECES		
SHIPPING PIECE MARK	WEIGHT EA. (LBS)	DWG NO.
G1A	39,331	1
G2A	39,703	2
G3A	39,703	3
G4A	39,703	4
G5A	39,331	5
CF1	396	6
M1	126	6

FIELD BOLT SUMMARY - SHIP. #1
(2% ADDITIONAL BOLTS ADDED + 3 EA. FOR TESTING)

ASTM A325 TYPE 3 (RCT); W/HVY HEX HD
517 - 7/8"ø HIGH STRENGTH BOLTS x 0'-2 3/4 ⚠1

ASTM A563 GRADE DH3 (RCT); HVY HEX
517 - NUTS FOR 7/8"ø BOLT

ASTM F436 TYPE 3 (RCT); ROUND & FLAT
517 - STD WASHERS FOR 7/8"ø BOLT

ASTM F959-3 DTI WASHERS
⚠1 517 - DTI WASHERS FOR 7/8"ø BOLT

Vermont Agency of Transportation
RECEIVED
Structural Steel_Approved 1.23.15.pdf
CK'D BY CLB OK'D BY DRP
January 23, 2015
RESUBMIT NO Approved
BY C. CARLSON DATE 01/23/15

CONTRACTOR NOTE:
ELEVATIONS ARE GIVEN TO BOTTOM OF FLANGE - DO NOT POUR CONCRETE PAD TO FINAL ELEVATIONS WITHOUT VERIFICATION OF BEARING HEIGHT AND BRIDGE SEATS.

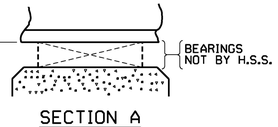

SECTION A

ELEVATIONS AT BEARING POINTS (In Feet)		
LINE NO.	BOTTOM OF BOT. FLG. ELEV.	
	ABUT. 1	ABUT. 2
G1	706.29	708.89
G2	706.32	708.92
G3	706.29	708.89
G4	706.15	708.75
G5	706.08	708.68

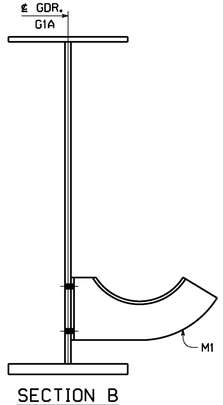

SECTION B

LIST OF FIELD CONNECTIONS — ONE WASHER PER BOLT UNLESS NOTED OTHERWISE

	LINE	ACTUAL NUMBER REQ'D	BOLT DIAM.	BOLT LENGTH	BOLTS PER CONN.	NO. OF CONN	GRIP	THICKNESS OF PIECES JOINED					PIECES CONNECTED AND REMARKS
⚠1	1	448	7/8	2 3/4	8	56	1 3/16	1/2	1/2	3/16			CF. GUSS. PL. TO CONN. PL.
⚠1	2	56	7/8	2 3/4	4	14	1 5/16	1/2	5/8	3/16			UTILITY BRACKET M1 TO G1A GDR. WEB

NOTES:
NO CREDIT WILL BE ALLOWED FOR WORK PERFORMED BY OTHERS IN REPLACING OR CORRECTING MATERIALS OR WORKMANSHIP COVERED BY THIS DRAWING UNLESS EXPRESSLY AUTHORIZED BY HIGH STEEL STRUCTURES, INC.
HIGH STEEL STRUCTURES, INC. DOES NOT SUPPLY STUD SHEAR CONNECTORS, ROD HANGERS, EXPANSION DAM MATERIAL, BEARINGS, BEARING PADS, OR ANCHOR BOLTS.
NOTICE: WEIGHTS OF MEMBERS LISTED ON THESE DRAWINGS ARE ESTIMATED WEIGHTS AND ACTUAL WEIGHTS WILL VARY. HIGH STEEL STRUCTURES, INC. WILL NOT BE RESPONSIBLE FOR ANY ERECTION PROCEDURES, SHIPPING PROCEDURES, ETC. DEVELOPED USING ESTIMATED WEIGHTS AS SHOWN.
ALL DIMENSIONS ARE GIVEN HORIZONTALLY (U.N.).
ERECTOR NOTE: ALL BOLTS MUST BE LOCATED IN ACCORDANCE WITH THE LIST OF FIELD CONNECTIONS. HIGH STEEL STRUCTURES WILL NOT BE RESPONSIBLE FOR FURNISHING ADDITIONAL BOLTS OR FOR ANY OTHER RELATED COSTS OR DAMAGES RESULTING FROM IMPROPER LOCATION OF BOLTS.
ALL FIELD BOLTS THRU WEB OF FASCIA GIRDERS ARE TO HAVE HEADS ON OUTSIDE OF WEB.
(RCT) INDICATES ROTATIONAL CAPACITY TESTED BOLTS. DO NOT MIX NUTS, BOLTS AND WASHERS FROM DIFFERENT CONTAINERS UNLESS ALL NUTS, BOLTS AND WASHERS HAVE THE SAME LOT NUMBER.
⚠1 ALL BOLTED CONNECTIONS REQUIRE DTI WASHERS.

NO.	REVISION	BY	CHK'D	DATE
⚠1	DETAIL ERROR: ADDED DTI WASHERS & NOTE AND REV. BOLT LENGTH.	MJD	MGK	1/12/15

HOLES
BOLTS
COATING
CODE(S)
SCALE N.T.S.

HIGH STEEL STRUCTURES LLC
An ISO 9001:2000 Certified Company
An Affiliate of High Industries Inc.
Lancaster Facility
1915 Old Philadelphia Pike
Lancaster, PA 17605-0008
Phone (717) 299-5211
Williamsport Facility
3501 W. 4th Street
Williamsport, PA 17701
Phone (570) 326-9051
www.highsteel.com

ERECTION FRAMING PLAN
VT RT 108 OVER LITTLE RIVER
VT RT 108 STA. 3+48.00 TO STA. 4+78.00
TOWN OF STOWE, LAMOILLE COUNTY, VERMONT
STATE OF VERMONT
AGENCY OF TRANSPORTATION

STATE CONT. OR REF. NO.	BRF 0235 (11)	FED. AID PROJ. NO.	
GENERAL CONTRACTOR	CCS CONSTRUCTORS LLC	HSSL PROJ. MGR	KEN GLIDDEN
DRAWING MANAGER	DAVE PAINTER (IH)	MADE BY	MJD
CHK'D. BY	MGK	DATE	11/19/14
HSSL PROJECT NUMBER	S-1140166A-1	DRAWING NUMBER	E1 OF E2

VT

PLOTTED: 1/13/2015 7:01:27 AM BY: mkreidel
SHIPMENT 01 PM&ENG: 58035274 PROJ: 58035275 SHIP&ERECT.: 58035276

ENGLISH

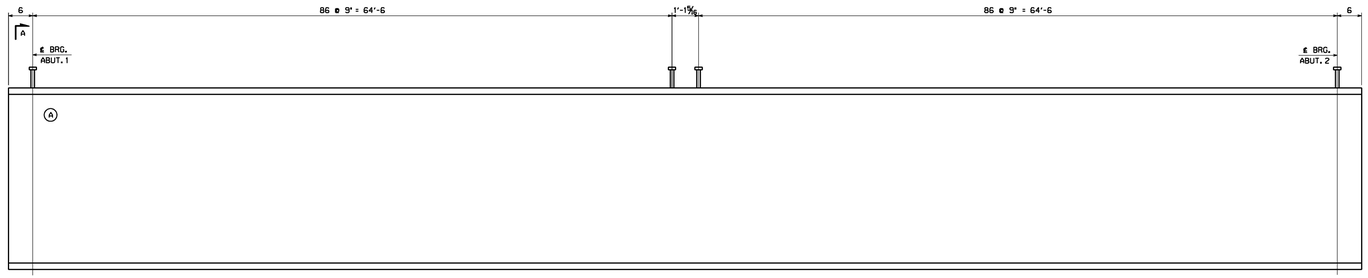

SHEAR STUD CONNECTOR LOCATION LAYOUT

DIMENSIONS GIVEN ALONG TOP OF GIRDER

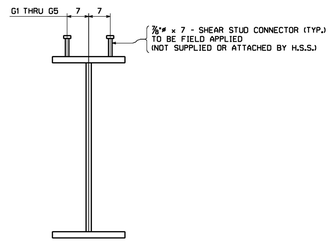

SECTION A

NOTES:

FOR NOTES, SEE DRAWING E1.
WORK THIS DRAWING WITH DRAWING E1.
Ⓐ INDICATES SUFFIX MARK OF SHIPPING PIECE.

Vermont Agency of Transportation

RECEIVED

CK'D BY CLB OK'D BY DRP

November 25, 2014

RESUBMIT NO Approved

BY C. CARLSON DATE 12/5/14

NO.	REVISION	BY	CHK'D	DATE

HOLES
BOLTS
COATING
CODE(S)
SCALE N.T.S.

HIGH STEEL STRUCTURES LLC
An AISC 9004:2000 Certified Company
An Affiliate of High Industries Inc.

Lancaster Facility
455 Old Philadelphia Pike
Lancaster, PA 17602-2809
Phone (717) 299-5211

Williamsport Facility
300 W. 4th Street
Williamsport, PA 17701
Phone (570) 326-5181
www.highsteel.com

ERECTION PLAN - STUD LAYOUT
VT RT 108 OVER LITTLE RIVER
VT RT 108 STA. 3+48.00 TO STA. 4+78.00
TOWN OF STOWE, LAMOILLE COUNTY, VERMONT
STATE OF VERMONT
AGENCY OF TRANSPORTATION

STATE CONT. OR REF. NO.	BRF 0235 (11)	FED. AID PROJ. NO.	
GENERAL CONTRACTOR	CCS CONSTRUCTORS LLC	HSS PROJ. MGR	KEN GLIDDEN
DRAWING MANAGER	DAVE PAINTER (IH)	MADE BY	MGK
CHK'D. BY	SSL	DATE	11-19-14
HSS PROJECT NUMBER	S-1140166A-1	DRAWING NUMBER	E2 OF E2

VT

PLOTTED: 11/25/2014 10:49:43 AM
SHIPMENT #1 PHASE/SQ: S835223 PROJ: S835225 SHOP/REPECT: S835225
BY: mkrandall
62

ENGLISH

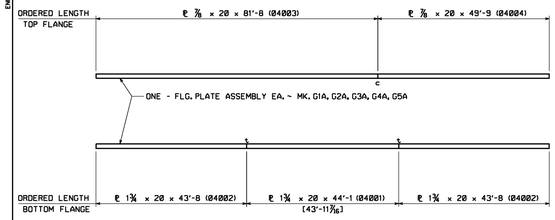

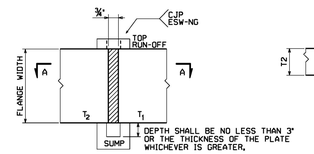

OPTIONAL ESW-NG FLANGE PLATE SPLICE
ELECTROSLAG NARROW GAP WELD PER AWS D1.5-10

(ESW-2 PROCEDURE)

SHOP NOTE: WHEN UTILIZING THIS OPTION, DELETE SUBMERGED ARC WELDING PREPARATION AND ADJUST MATERIAL LENGTH AS REQUIRED.

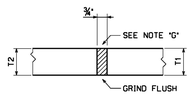

SECTION A-A

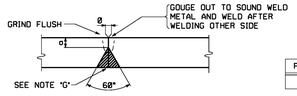

FLG. THK.	⅞	1¾
α	¼	½

TYPICAL FLANGE PLATE SPLICE

FOR FLANGE PLATES 2" THICK AND UNDER (B-L2c-S)
(W71X-2 SERIES)

NOTE "G"
ALL SPLICES MAY HAVE A MAXIMUM REINFORCEMENT OF 1/8". GRIND SMOOTH AT SPLICES THAT ARE TO BE TESTED AND ALL BOTTOM FLANGE SPLICES.

NOTES:

FOR GENERAL SHOP NOTES, SEE DRAWING GN1.
ALL FLANGE PLATES REQUIRE CHARPY V-NOTCH TEST.
DIMENSIONS SHOWN THUS: (43'-11⅞) ARE THE ACTUAL DIMENSIONS THAT WILL APPEAR ON THE GIRDER DETAIL DRAWINGS.
THE LETTERS "t" & "c" AT FLANGE SPLICES INDICATE TENSION AND COMPRESSION SPLICES RESPECTIVELY.
ALL SPLICES MARKED "t" TO BE RADIOGRAPHICALLY TESTED 100%.
ALL SPLICES MARKED "c" TO BE RADIOGRAPHICALLY TESTED 25%.

Vermont Agency of Transportation

RECEIVED

CK'D BY CLB OK'D BY DRP

November 25, 2014

RESUBMIT NO Approved

BY C. CARLSON DATE 12/5/14

NO.	REVISION	BY	CHK'D	DATE
△				
△				
△				

HOLES

BOLTS

COATING

CODE(S)
30

SCALE
N.T.S.

HIGH STEEL STRUCTURES, LLC
An AISC 360-2005 Certified Company
An ATTitude of High Industries Inc.

Corporate Facility
1853 Old Phillips Rd.
Lancaster, PA 17601-6708
Phone (717) 285-5211

Williamsport Facility
1500 W. 4th St extd.
Williamsport, PA 17701
Phone (570) 326-5000

www.highsteel.com

FLANGE SPLICE DETAILS
VT RT 108 OVER LITTLE RIVER
VT RT 108 STA. 3+48.00 TO STA. 4+78.00
TOWN OF STOWE, LAMOILLE COUNTY, VERMONT
STATE OF VERMONT
AGENCY OF TRANSPORTATION

STATE CONT. OR REF. NO.	BRF 0235 (11)	FED. AID PROJ. NO.	
GENERAL CONTRACTOR	CCS CONSTRUCTORS LLC	HSS PROJ. MGR	KEN GLIDDEN
DRAWING MANAGER	DAVE PAINTER (IH)	MADE BY	KLW
CHK'D BY	KMA	DATE	10/15/14
HSS PROJECT NUMBER	S-1140166A-1	DRAWING NUMBER	FS1 OF FS1

VT

PLOTTED: 12/29/2014
BY: mkrandall
SHIPMENT #1
PHASING_5835224 PROJ_5835235 SHOPASPECT_e_5835235
1
2

ENGLISH

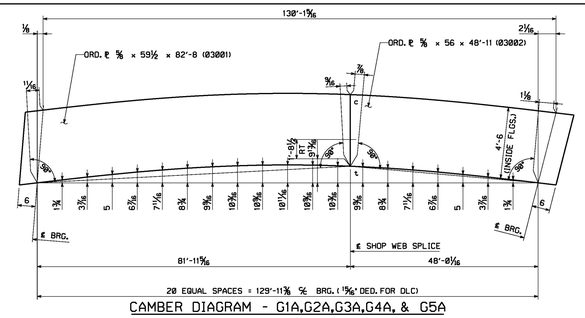

CAMBER DIAGRAM - G1A,G2A,G3A,G4A, & G5A

TYPICAL WEB PLATE SPLICE

FOR WEB PLATES 5/16" TO 2" THICK (B-L2c-S) (W71X-2 SERIES)

NOTE "G"

ALL WELDS MAY HAVE A MAXIMUM REINFORCEMENT OF 1/8". GRIND THE WELDS SMOOTH IN THE AREAS TO BE TESTED AND FOR THE FULL DEPTH OF WEB ON G1A (F.S.) AND G5A (N.S.).

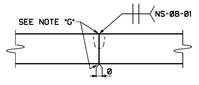

TYPICAL ALTERNATE WEB PLATE SPLICE

FOR ASTM A709 GR.50 OR GR.50W WEB PLATES 1/2" TO 3/4" THICK (NS-1X PROCEDURE)

NOTE "G"

ALL WELDS MAY HAVE A MAXIMUM REINFORCEMENT OF 1/8". GRIND THE WELDS SMOOTH IN THE AREAS TO BE TESTED AND FOR THE FULL DEPTH OF WEB ON G1A (F.S.) AND G5A (N.S.).

SHOP NOTE:

PLEASE NOTE THAT FOR ASTM A709 GR.50 OR 50W WEB PLATES 1/2" TO 3/4" THICK, EITHER TYPICAL WEB PLATE SPLICE JOINT MAY BE USED AT THE DISCRETION OF THE SHOP.

Vermont Agency of Transportation

RECEIVED

Structural Steel_Approved 12.5.14.pdf

CK'D BY CLB OK'D BY DRP

November 25, 2014

RESUBMIT NO Approved

BY C. CARLSON DATE 12/5/14

NOTES:

FOR GENERAL SHOP NOTES, SEE DRAWING GN1.
ALL WEB PLATES REQUIRE CHARPY V-NOTCH TEST.
THE LETTERS "c" & "c" AT WEB SPLICES INDICATE TENSION AND COMPRESSION EDGES AT SPLICES.
RT INDICATES RADIOGRAPHIC TESTING.

NO.	REVISION	BY	CHK'D	DATE

HOLES

BOLTS

COATING

CODE(S) 30

SCALE N.T.S.

HIGH STEEL STRUCTURES LLC
An ISO 9001:2000 Certified Company
An Affiliate of High Industries Inc.
Lancaster Facility: 325 Old Philadelphia Pike, Lancaster, PA 17602-2008, Phone (717) 735-7671
Williamsport Facility: 1000 Arch Street, Williamsport, PA 17701, Phone (570) 326-5091, www.highsteel.com

WEB CAMBER DIAGRAMS
VT RT 108 OVER LITTLE RIVER
VT RT 108 STA. 3+48.00 TO STA. 4+78.00
TOWN OF STOWE, LAMOILLE COUNTY, VERMONT
STATE OF VERMONT
AGENCY OF TRANSPORTATION

STATE CONT. OR REF. NO.	BRF 0235 (11)	FED. AID PROJ. NO.	
GENERAL CONTRACTOR	CCS CONSTRUCTORS LLC	HSSL PROJ. MGR	KEN GLIDDEN
DRAWING MANAGER	DAVE PAINTER (IH)	MADE BY	KLW
CHK'D BY	KMA	DATE	10/15/14
HSSL PROJECT NUMBER	S-1140166A-1	DRAWING NUMBER	WC1 OF WC1

VT

PLOTTED: 11/25/2014 08:06:16 AM
BY: stevevdel
SHIPMENT #1
PW&TNG: 5833224 PROJ: 5833235 SHOP&PROJ#: 5833235
62

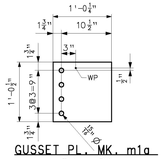

GUSSET PL. MK. m1a

Thk = .500

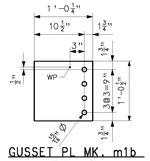

GUSSET PL MK. m1b

Thk = .500

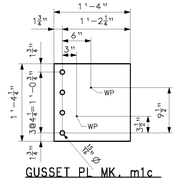

GUSSET PL MK. m1c

Thk = .500

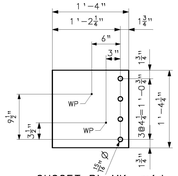

GUSSET PL MK. m1d

Thk = .500

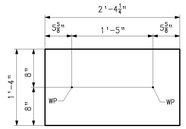

GUSSET PL MK. m1f

Thk = .500

BILL OF MATERIAL

QTY	MARK	COMM.	DESCRIPTION	LENGTH	SPEC	GRADE	TEST	REMARKS	ITEM	WEIGHT EA. (LBS)
28	m1a	PL	1/2 x 12 1/2	1 0 1/4	M270	50W			1100.2	22
28	m1b	PL	1/2 x 12 1/2	1 0 1/4	M270	50W			1100.2	22
28	m1c	PL	1/2 x 16 1/4	1 4	M270	50W			1100.2	37
28	m1d	PL	1/2 x 16 1/4	1 4	M270	50W			1100.2	37
28	m1f	PL	1/2 x 16	2 4 1/4	M270	50W			1100.2	64
14	m1g	PL	1/2 x 10 1/2	1 7	M270	50W			1500.1	28
28	m1h	PL	1/2 x 10 1/2	2 0	M270	50W			1500.1	36
14	m1k	PL	1/2 x 10	1 6 11/16	M270	50W			1500.1	26

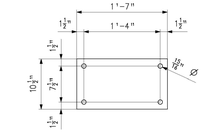

UTIL. SUPPORT PLATE MK. m1g

(CODE 68)

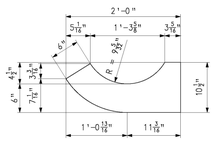

UTIL. SUPPORT ARM MK. m1h

(CODE 68)

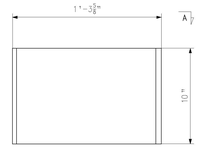

PIPE SHIELD SEAT MK. m1k

ENLARGED VIEW

(CODE 68)

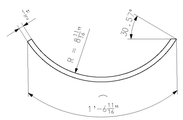

ENLARGED SECTION A

FOR GENERAL SHOP NOTES, SEE DRAWING GN1.

Vermont Agency of Transportation

RECEIVED

Structural Steel_Approved 12.5.14.pdf

CK'D BY CLB OK'D BY DRP

November 25, 2014

RESUBMIT NO Approved

BY C. CARLSON DATE 12/5/14

NO.	REVISION	BY	CHK'D	DATE

HOLES 15/16" Ø

BOLTS NONE

COATING NONE

CODE(S) 4J (U.N. 68)

SCALE N.T.S.

HIGH STEEL STRUCTURES LLC

1915 Old Philadelphia Pike
Lancaster, PA 17602-2838
Phone (717) 299-5211
www.highsteel.com

An ISO 9001:2000 Certified Company — An Affiliate of High Industries Inc.

CROSSFRAME JOB STANDARDS

VT RT 108 OVER LITTLE RIVER

VT RT 108 STA. 3+48.00 TO STA. 4+78.00

TOWN OF STOWE, LAMOILLE COUNTY, VERMONT

STATE OF VERMONT

AGENCY OF TRANSPORTATION

STATE CONT. OR REF. NO.	BRF 0235 (11)	FED. AID PROJ. NO.	
GENERAL CONTRACTOR	CCS CONSTRUCTORS LLC	HSS1 PROJ. MGR	KEN GLIDDEN
DRAWING MANAGER	DAVE PAINTER (IH)	MADE BY	MAF
		CHK'D BY	MGK
		DATE	11/18/14
HSS1 PROJECT NUMBER	S-1140166A-1	DRAWING NUMBER	M1 OF M1

VT

SHIPMENT 1 PM&MSH SSQ5275 PROJ SSQ5275 SHIPMENT1 SSQ5275

PLOTTED: MM/DD/YY hhmmss BY: XXXXXXXX

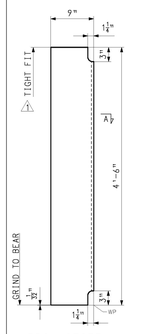

BRG. STIFF. MK. x1a

Thk = .875"

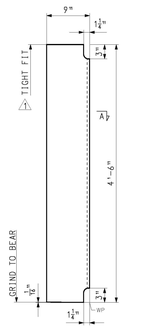

BRG. STIFF. MK. x1b

Thk = .875"

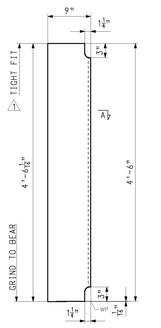

BRG. STIFF. MK. x1c

Thk = .875"

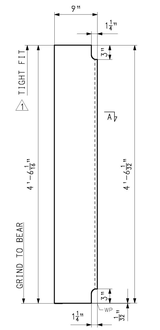

BRG. STIFF. MK. x1d

Thk = .875"

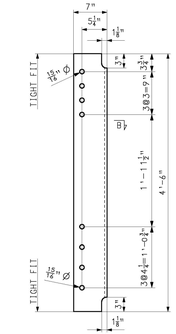

CONN. PLATE MK. x1f

Thk = .500"

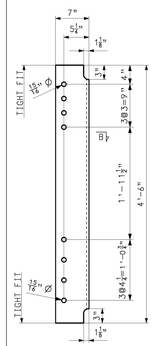

CONN. PLATE MK. x1g

Thk = .500"

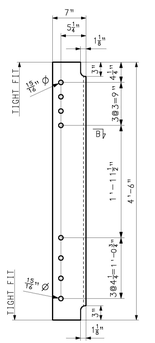

CONN. PLATE MK. x1h

Thk = .500"

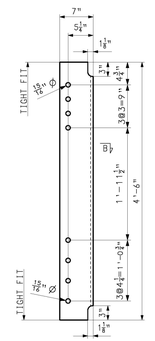

CONN. PLATE MK. x1k

Thk = .500"

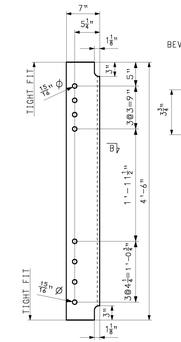

CONN. PLATE MK. x1m

Thk = .500"

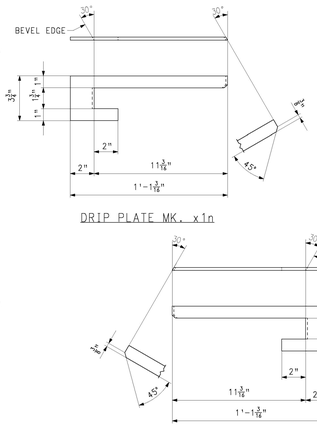

DRIP PLATE MK. x1n

DRIP PLATE MK. x1p

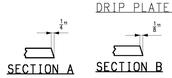

FOR GENERAL SHOP NOTES, SEE DRAWING GN1.

BILL OF MATERIAL

QTY	MARK	COMM.	DESCRIPTION	LENGTH	SPEC	GRADE	TEST	REMARKS	ITEM	WEIGHT EA. (LBS)
5	x1a	PL	7/8 x 9	4 6	M270	50W			0700.1	121
5	x1b	PL	7/8 x 9	4 6	M270	50W			0700.1	121
5	x1c	PL	7/8 x 9	4 6 1/16	M270	50W			0700.1	121
5	x1d	PL	7/8 x 9	4 6 1/16	M270	50W			0700.1	121
4	x1f	PL	1/2 x 7	4 6	M270	50W			0700.2	54
7	x1g	PL	1/2 x 7	4 6	M270	50W			0700.2	54
3	x1h	PL	1/2 x 7	4 6	M270	50W			0700.2	54
13	x1k	PL	1/2 x 7	4 6	M270	50W			0700.2	54
29	x1m	PL	1/2 x 7	4 6	M270	50W			0700.2	54
1	x1n	PL	1/4 x 3 3/4	1 1 3/16	M270	50W			0700.3	4
1	x1p	PL	1/4 x 3 3/4	1 1 3/16	M270	50W			0700.3	4

NO.	REVISION	BY	CHK'D	DATE
1	APPROVAL CHG.: ADDED TIGHT FIT	MJD	MGK	1/12/15

HOLES: 19/16" Ø
BOLTS: NONE
COATING: NONE
CODE YR: 30
SCALE: N.T.S.

HIGH STEEL STRUCTURES, LLC
905 Old Philadelphia Pike
Lancaster, PA 17602-2008
Phone (717) 299-5211
www.jhighsteel.com
An ISO 9001:2000 Certified Company. An Affiliate of High Industries Inc.

GIRDER JOB STANDARDS
VT RT 108 OVER LITTLE RIVER
VT RT 108 STA. 3+48.00 TO STA. 4+78.00
TOWN OF STOWE, LAMOILLE COUNTY, VERMONT
STATE OF VERMONT
AGENCY OF TRANSPORTATION

STATE CONT. OR REF. NO.:	BRF 0235 (11)	FED. AID PROJ. NO.:	
GENERAL CONTRACTOR:	CCS CONSTRUCTORS LLC	HSS PROJ. MGR:	KEN GLIDDEN
DRAWING MANAGER:	DAVE PAINTER (IH)	MADE BY: MJD	CHK'D BY: SSL DATE: 11/13/14
HSS PROJECT NUMBER:	S-1140166A-1	DRAWING NUMBER:	X1 OF X1

VT

SHIPMENT 1 PMM6H SSS6A26 PRD SSS6A26 SHIPMENT1 SSS6A26

PLOTTED: MM/DD/YY hh:mm:ss BY: XXXXXXX

Vermont Agency of Transportation

RECEIVED

Structural Steel_Approved 1.20.15.pdf

CK'D BY CLB OK'D BY DRP

January 23, 2015

RESUBMIT NO Approved

BY C. CARLSON DATE 01/23/15

ENGLISH

GENERAL SHOP NOTES

SPECIFICATIONS:
- DESIGN SPECIFICATIONS: AASHTO LRFD BRIDGE DESIGN SPECIFICATIONS, DATED 2012, AND THEIR LATEST REVISIONS.
- ALL MATERIAL AND WORKMANSHIP TO BE IN ACCORDANCE WITH THE STATE OF VERMONT, AGENCY OF TRANSPORTATION, STANDARD SPECIFICATIONS FOR CONSTRUCTION DATED 2011, WITH CURRENT MODIFICATIONS AND ADDITIONS AND SPECIAL PROVISIONS.

MATERIAL:
- UNLESS NOTED OTHERWISE, ALL STEEL TO BE AASHTO M270 GRADE 50W.
- (T) INDICATES ZONE 2 CHARPY V-NOTCH TESTING REQUIRED.

SHOP PROCEDURE:
- ALL FLANGE AND WEB PLATE SPLICES TO BE MADE BEFORE FINAL FITTING AND WELDING INTO GIRDER.
- CAMBER TOLERANCE: -0" TO +3/4"
- ALL RE-ENTRANT CUTS TO HAVE 1" MIN. RADIUS.
- ONLY LOW STRESS DIE STAMPS MAY BE USED FOR MARKING IN AREAS NOT EXPOSED ON THE FINISHED STRUCTURE, SUCH AS EDGES OF STIFFENERS THAT WILL COME IN CONTACT WITH THE FLANGE OR WEB.

INSPECTION:
- SHOP INSPECTION BY TO BE DETERMINED

WELDING:
- ALL WELDING IS TO CONFORM TO AWS D1.5 (2010) ⚠1
- WELDING METHODS, PROCEDURES, AND MATERIALS SHALL COMPLY WITH THE SPECIFIC PROCEDURE DESIGNATED IN THE WELD SYMBOL TAIL.
- FOR WELDING STIFFENERS AND CONNECTION PLATES TO GIRDERS, SEE STIFFENER WELDING DETAIL.
- FOR WELDING CROSSFRAMES, SEE CROSSFRAME WELDING DETAIL.

NON-DESTRUCTIVE TESTING:
- FLANGE AND WEB PLATE SPLICES TO BE RADIOGRAPHICALLY TESTED, AS CALLED FOR ON DRAWINGS PREFIXED "FS" AND "WC", BY H.S.S.
- MAGNETIC PARTICLE INSPECTION IS REQUIRED ON AT LEAST 1'-0 OF EVERY 10'-0 LENGTH OF FILLET WELDS AND 1'-0 OF SUCH WELDS LESS THAN 10'-0 IN LENGTH ON GIRDER WEB TO FLANGE AND CONNECTION PLATES TO WEB AND FLANGE WELDS. TESTING PER THE YOKE METHOD, USING DC.

DRILLING, PUNCHING, AND REAMING HOLE PROCEDURES:
- UNLESS NOTED OTHERWISE, BOLT HOLES IN MATERIAL 5/8" OR LESS IN THICKNESS MAY BE CNC (COMPUTER NUMERICALLY CONTROLLED) PUNCHED OR CNC DRILLED FULL SIZE UNASSEMBLED. ALL MATERIAL THICKER THAN 5/8" IS TO BE DRILLED.

CLEANING:
- ALL STEEL: SSPC-SP1, AS NECESSARY
- ALL STEEL: SSPC-SP10, FINAL SURFACE PREP ⚠1

PAINTING:
- NO PAINT

DRAWING REFERENCE:

FLANGE SPLICES	-PREFIXED "FS"
WEB CAMBERS	-PREFIXED "WC"
GIRDER JOB STANDARDS	-PREFIXED "X"
CROSSFRAME JOB STDS.	-PREFIXED "M"
WELDING PROCEDURE	-PREFIXED "WP"

MINIMUM COLD-BENDING RADII

THICKNESS INCHES (t)	UP TO 3/4"	OVER 3/4" TO 1", INCL.	OVER 1" TO 2", INCL.	OVER 2"
ASTM A709/ AASHTO M270 GRADE				
36	1.5t	1.5t	1.5t	2.0t
50, 50W, HPS50W	1.5t	1.5t	2.0t	2.5t
HPS70W	1.5t	1.5t	2.5t	3.0t
100, 100W	1.75t	2.25t	4.5t	5.5t

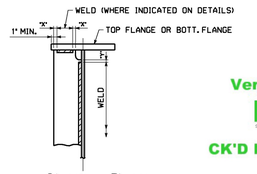

"X" = 3/8" MIN., 7/8" MAX.
"Y" = 3/8" MIN., 7/8" MAX.

STIFFENER WELDING DETAIL

ALL CROSSFRAME WELDS ARE TO BE TERMINATED FROM EDGE OF GUSSET PLATES. FILL PLATES OR ANGLES AS INDICATED

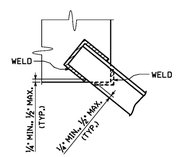

CROSSFRAME MEMBER WELDING DETAIL

Vermont Agency of Transportation

RECEIVED

Structural Steel_Approved 1.23.15.pdf

CK'D BY CLB OK'D BY DRP

January 23, 2015

RESUBMIT NO Approved

BY C. CARLSON DATE 01/23/15

NO.	REVISION	BY	CHK'D	DATE
⚠2				
⚠1				
1	APPROVAL CHG.; REV. NOTES.	MJD	MGK	1/12/15

HOLES
BOLTS
COATING
CODE(S)
SCALE N.T.S.

HIGH STEEL STRUCTURES LLC
An AISC MOD.#3000 Certified Company
An ATTAIN of High Industries Inc.
Lancaster Facility: 1915 Harrisburg Pike, Lancaster, PA 17601-0008 Phone (717) 299-5211
Montpelier Facility: 800 E. 4th Street Montpelier, OH 43543 Phone (419) 636-1600
www.highsteel.com

GENERAL SHOP NOTES
VT RT 108 OVER LITTLE RIVER
VT RT 108 STA. 3+48.00 TO STA. 4+78.00
TOWN OF STOWE, LAMOILLE COUNTY, VERMONT
STATE OF VERMONT
AGENCY OF TRANSPORTATION

STATE CONT. OR REF. NO.	BRF 0235 (11)	FED. AID PROJ. NO.	
GENERAL CONTRACTOR	CCS CONSTRUCTORS LLC	HSS PROJ. MGR.	KEN GLIDDEN
DRAWING MANAGER	DAVE PAINTER (IH)	MADE BY	SJA
CHK'D BY	KCL	DATE	11/5/14
HSS PROJECT NUMBER	S-1140166A-1	DRAWING NUMBER	GN1 OF GN1

VT

SHIPMENT #1 PHASING QB03224 PROJ QB03235 SHPMARECT.r_QB03235

BY: stevewiel

PLOTTED: 1/12/2015 07:05:05 PM

62

ENGLISH

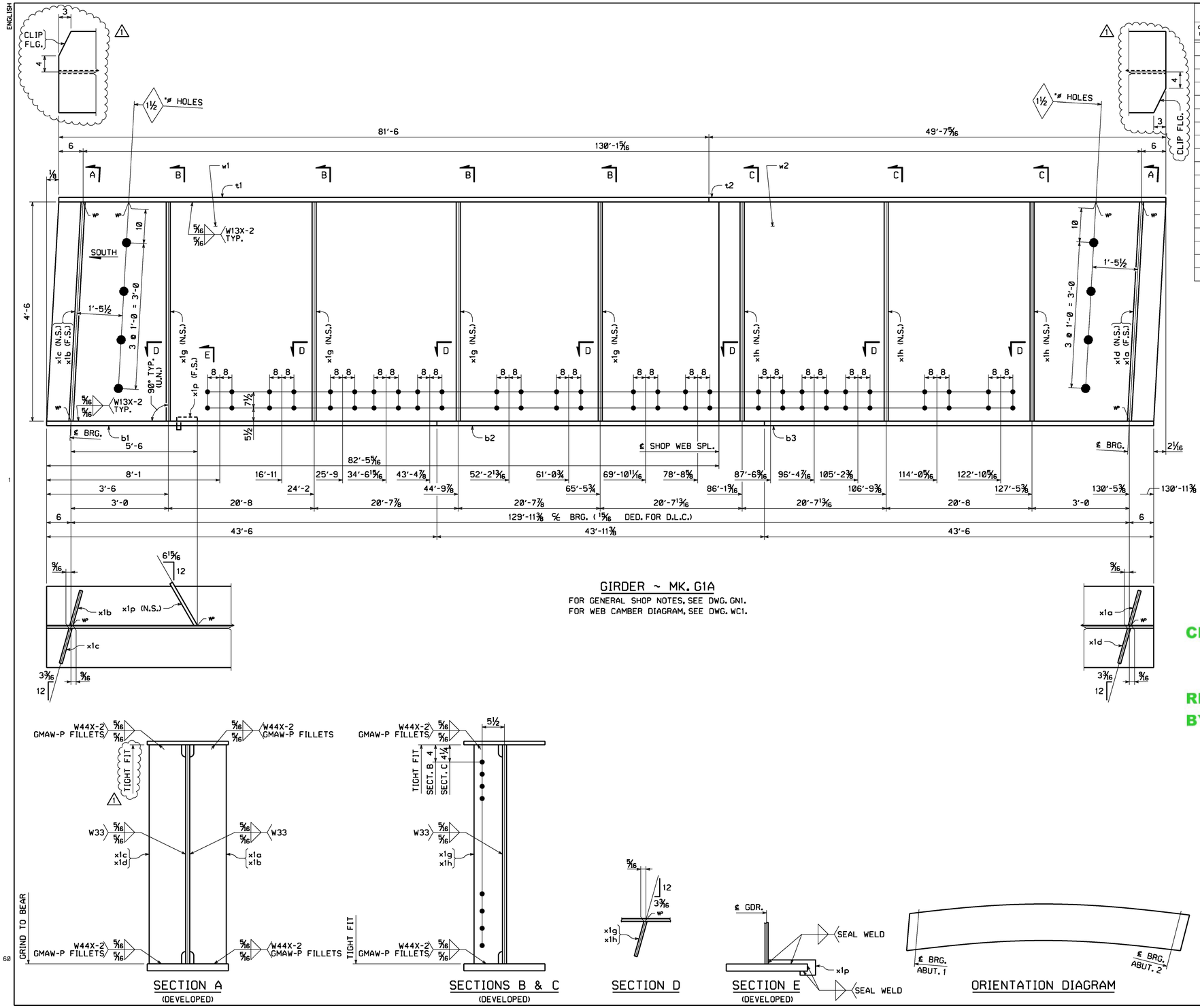

GIRDER ~ MK. G1A

FOR GENERAL SHOP NOTES, SEE DWG. GN1.
FOR WEB CAMBER DIAGRAM, SEE DWG. WC1.

SECTION A
(DEVELOPED)

SECTIONS B & C
(DEVELOPED)

SECTION D

SECTION E
(DEVELOPED)

ORIENTATION DIAGRAM

BILL OF MATERIAL

QTY EA.	MARK	COMM	DESCRIPTION	LENGTH	SPEC	GRADE	TEST	REMARKS	ITEM	SHIP WT. EA. (LBS)
1	G1A		GIRDER							39331
1	w1	PL	5/8 x 54	82 5 7/8	M270	50W	T		03001	
1	w2	PL	5/8 x 54	48 8 3/16	M270	50W	T		03002	
1	t1	PL	7/8 x 20	81 6 1/8	M270	50W	T		04003	
1	t2	PL	7/8 x 20	49 7 3/8	M270	50W	T		04004	
1	b1	PL	1 3/4 x 20	43 6 1/16	M270	50W	T		04002	
1	b2	PL	1 3/4 x 20	43 11 7/16	M270	50W	T		04001	
1	b3	PL	1 3/4 x 20	43 6 1/16	M270	50W	T		04002	
1	x1a	PL	7/8 x 9	4 6	M270	50W			07001	
1	x1b	PL	7/8 x 9	4 6	M270	50W			07001	
1	x1c	PL	7/8 x 9	4 6 1/16	M270	50W			07001	
1	x1d	PL	7/8 x 9	4 6 1/16	M270	50W			07001	
4	x1g	PL	1/2 x 7	4 6	M270	50W			07002	
3	x1h	PL	1/2 x 7	4 6	M270	50W			07002	
1	x1p	PL	1/4 x 3 3/4	1 1 3/16	M270	50W			07003	

Vermont Agency of Transportation

RECEIVED

Structural Steel_Approved 1.23.15.pdf

CK'D BY CLB OK'D BY DRP

January 23, 2015

RESUBMIT NO Approved

BY C. CARLSON DATE 01/23/15

NO.	REVISION	BY	CHK'D	DATE
1	APPROVAL CHANGE: ADDED TIGHT FIT & TOP FLANGE CLIP.	MJD	MGK	1/12/15

HOLES 15/16"ø (U.N.)

BOLTS: NONE

COATING: NONE

CODE(S): 30

SCALE: N.T.S.

VT

HIGH STEEL STRUCTURES LLC
An ISO 9001:2000 Certified Company
An Affiliate of High Industries Inc.
Lancaster Facility
1915 Old Philadelphia Pike
Lancaster, PA 17605-0008
Phone (717) 299-5211
Williamsport Facility
3501 W. 4th Street
Williamsport, PA 17701
Phone (570) 326-9051
www.highsteel.com

	GIRDER G1A
	VT RT 108 OVER LITTLE RIVER
	VT RT 108 STA. 3+48.00 TO STA. 4+78.00
	TOWN OF STOWE, LAMOILLE COUNTY, VERMONT
	STATE OF VERMONT
	AGENCY OF TRANSPORTATION
STATE CONT. OR REF. NO.	BRF 0235 (11) — FED. AID PROJ. NO.
GENERAL CONTRACTOR	CCS CONSTRUCTORS LLC — HSSL PROJ. MGR KEN GLIDDEN
DRAWING MANAGER	DAVE PAINTER (IH) — MADE BY MJD — CHK'D. BY MGK — DATE 11/18/14
HSSL PROJECT NUMBER	S-1140166A-1 — DRAWING NUMBER 1 OF 6

PLOTTED: 1/12/2015 2:18:51 PM BY: mkreidel SHIPMENT 01 PM&ENG: 50335274 PRD: 50335275 SHIP&ERECT.: 50335275

60

ENGLISH

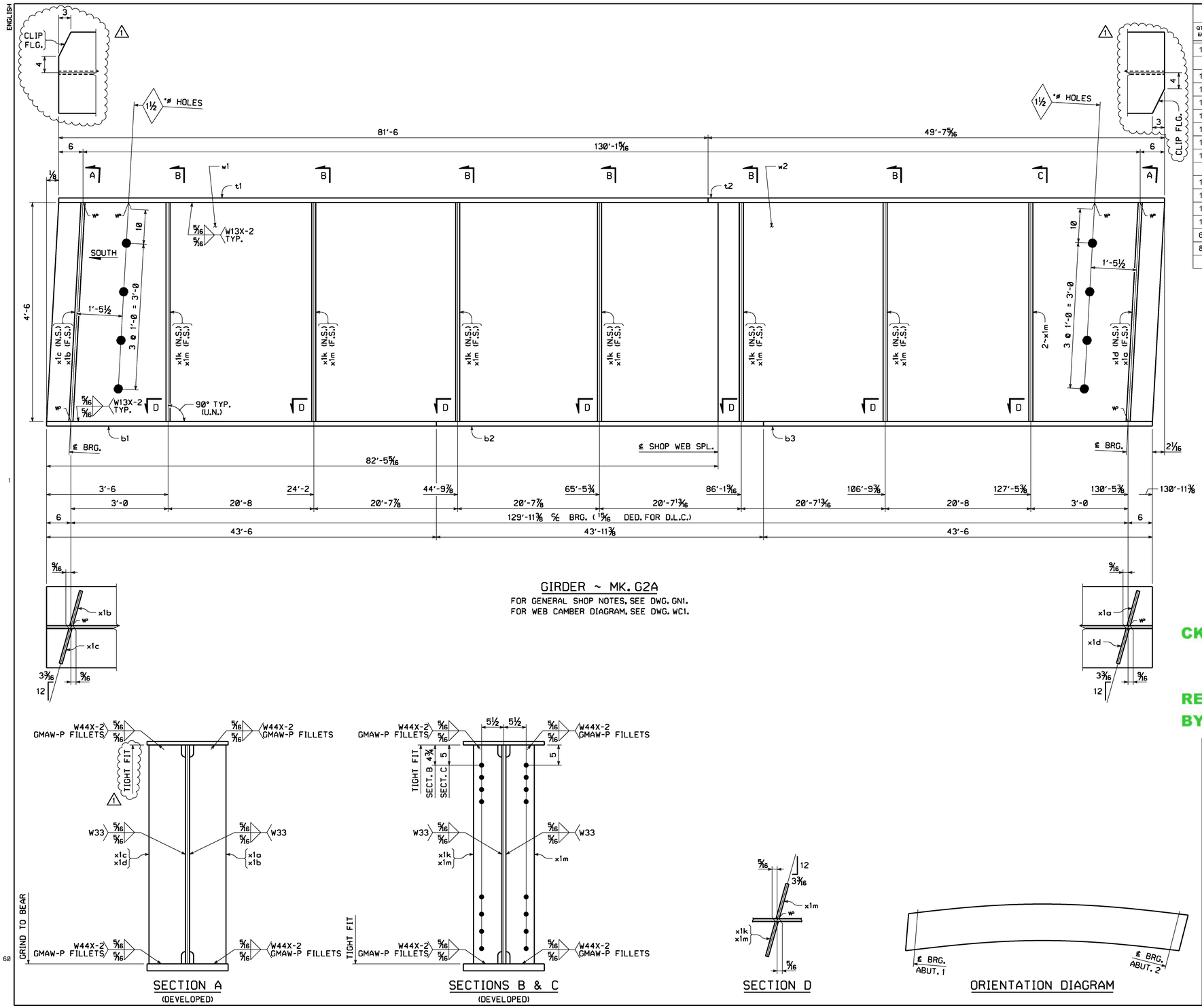

GIRDER ~ MK. G2A

FOR GENERAL SHOP NOTES, SEE DWG. GN1.
FOR WEB CAMBER DIAGRAM, SEE DWG. WC1.

SECTION A
(DEVELOPED)

SECTIONS B & C
(DEVELOPED)

SECTION D

ORIENTATION DIAGRAM

BILL OF MATERIAL

QTY EA.	MARK	COMM	DESCRIPTION	LENGTH	SPEC	GRADE	TEST	REMARKS	ITEM	SHIP WT. EA. (LBS)
1	G2A		GIRDER							39703
1	w1	PL	5/8 x 54	82 5 7/8	M270	50W	T		03001	
1	w2	PL	5/8 x 54	48 8 3/16	M270	50W	T		03002	
1	t1	PL	7/8 x 20	81 6 1/8	M270	50W	T		04003	
1	t2	PL	7/8 x 20	49 7 3/8	M270	50W	T		04004	
1	b1	PL	1 3/4 x 20	43 6 1/16	M270	50W	T		04002	
1	b2	PL	1 3/4 x 20	43 11 7/16	M270	50W	T		04001	
1	b3	PL	1 3/4 x 20	43 6 1/16	M270	50W	T		04002	
1	x1a	PL	7/8 x 9	4 6	M270	50W			07001	
1	x1b	PL	7/8 x 9	4 6	M270	50W			07001	
1	x1c	PL	7/8 x 9	4 6	M270	50W			07001	
1	x1d	PL	7/8 x 9	4 6 1/16	M270	50W			07001	
6	x1k	PL	1/2 x 7	4 6	M270	50W			07002	
8	x1m	PL	1/2 x 7	4 6	M270	50W			07002	

Vermont Agency of Transportation

RECEIVED

Structural Steel_Approved 1.23.15.pdf

CK'D BY CLB OK'D BY DRP

January 23, 2015

RESUBMIT NO Approved

BY C. CARLSON DATE 01/23/15

NO.	REVISION	BY	CHK'D	DATE
1	APPROVAL CHANGE: ADDED TIGHT FIT & TOP FLANGE CLIP.	MJD	MGK	1/12/15

HOLES: 15/16"ø (U.N.)
BOLTS: NONE
COATING: NONE
CODE(S): 30
SCALE: N.T.S.

HIGH STEEL STRUCTURES LLC
An ISO 9001:2000 Certified Company
An Affiliate of High Industries Inc.
Lancaster Facility: 1915 Old Philadelphia Pike, Lancaster, PA 17605-0008, Phone (717) 299-5211
Williamsport Facility: 3501 W. 4th Street, Williamsport, PA 17701, Phone (570) 326-9051
www.highsteel.com

	GIRDER G2A
	VT RT 108 OVER LITTLE RIVER
	VT RT 108 STA. 3+48.00 TO STA. 4+78.00
	TOWN OF STOWE, LAMOILLE COUNTY, VERMONT
	STATE OF VERMONT
	AGENCY OF TRANSPORTATION
STATE CONT. OR REF. NO.	BRF 0235 (11) — FED. AID PROJ. NO.
GENERAL CONTRACTOR	CCS CONSTRUCTORS LLC — HSSL PROJ. MGR KEN GLIDDEN
VT	DRAWING MANAGER DAVE PAINTER (IH) — MADE BY MJD — CHK'D. BY MGK — DATE 11/18/14
	HSSL PROJECT NUMBER S-1140166A-1 — DRAWING NUMBER 2 OF 6

PLOTTED: 1/12/2015 2:19:01 PM
BY: mkreidel
SHIPMENT 01
PM&ENG: 58035274 PROJ: 58035275 SHIP&RECT.: 58035275
62
1

ENGLISH

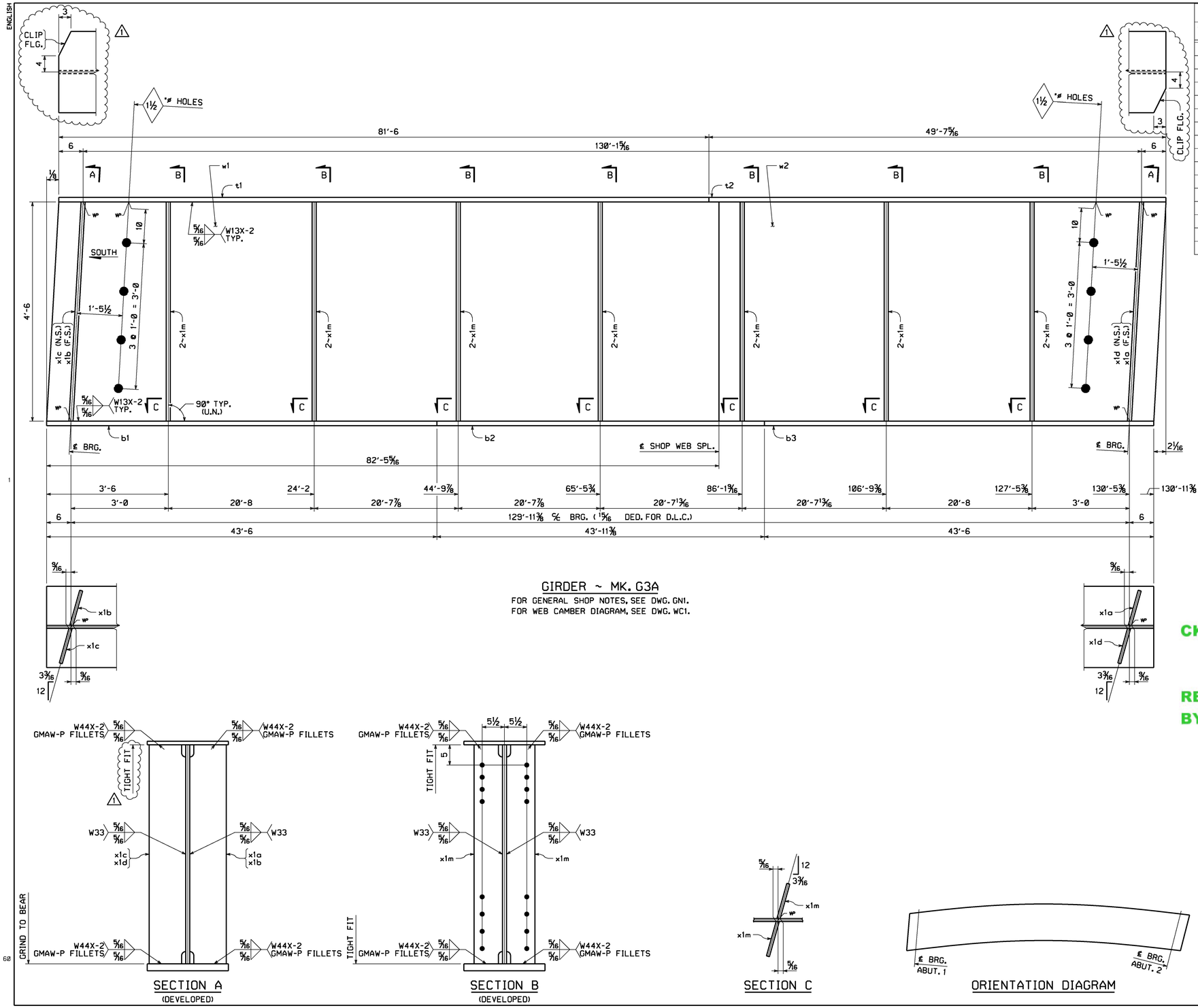

GIRDER ~ MK. G3A

FOR GENERAL SHOP NOTES, SEE DWG. GN1.
FOR WEB CAMBER DIAGRAM, SEE DWG. WC1.

SECTION A
(DEVELOPED)

SECTION B
(DEVELOPED)

SECTION C

ORIENTATION DIAGRAM

BILL OF MATERIAL

QTY EA.	MARK	COMM	DESCRIPTION	LENGTH	SPEC	GRADE	TEST	REMARKS	ITEM	SHIP WT. EA. (LBS)
1	G3A		GIRDER							39703
1	w1	PL	5/8 x 54	82 5 7/8	M270	50W	T		03001	
1	w2	PL	5/8 x 54	48 8 3/16	M270	50W	T		03002	
1	t1	PL	7/8 x 20	81 6 1/8	M270	50W	T		04003	
1	t2	PL	7/8 x 20	49 7 3/8	M270	50W	T		04004	
1	b1	PL	1 3/4 x 20	43 6 1/16	M270	50W	T		04002	
1	b2	PL	1 3/4 x 20	43 11 7/16	M270	50W	T		04001	
1	b3	PL	1 3/4 x 20	43 6 1/16	M270	50W	T		04002	
1	x1a	PL	7/8 x 9	4 6	M270	50W			07001	
1	x1b	PL	7/8 x 9	4 6	M270	50W			07001	
1	x1c	PL	7/8 x 9	4 6 1/16	M270	50W			07001	
1	x1d	PL	7/8 x 9	4 6 1/16	M270	50W			07001	
14	x1m	PL	1/2 x 7	4 6	M270	50W			07002	

Vermont Agency of Transportation

RECEIVED

Structural Steel_Approved 1.23.15.pdf

CK'D BY CLB OK'D BY DRP

January 23, 2015

RESUBMIT NO Approved

BY C. CARLSON DATE 01/23/15

NO.	REVISION	BY	CHK'D	DATE
1	APPROVAL CHANGE: ADDED TIGHT FIT & TOP FLANGE CLIP.	MJD	MGK	1/12/15

HOLES 15/16"ø (U.N.)
BOLTS NONE
COATING NONE
CODE(S) 30
SCALE N.T.S.

HIGH STEEL STRUCTURES LLC
An ISO 9001:2000 Certified Company
An Affiliate of High Industries Inc.
Lancaster Facility
1915 Old Philadelphia Pike
Lancaster, PA 17605-0008
Phone (717) 299-5211
Williamsport Facility
3501 W. 4th Street
Williamsport, PA 17701
Phone (570) 326-9051
www.highsteel.com

	GIRDER G3A
	VT RT 108 OVER LITTLE RIVER
	VT RT 108 STA. 3+48.00 TO STA. 4+78.00
	TOWN OF STOWE, LAMOILLE COUNTY, VERMONT
	STATE OF VERMONT
	AGENCY OF TRANSPORTATION
STATE CONT. OR REF. NO.	BRF 0235 (11) — FED. AID PROJ. NO.
GENERAL CONTRACTOR	CCS CONSTRUCTORS LLC — HSSL PROJ. MGR KEN GLIDDEN
VT	DRAWING MANAGER DAVE PAINTER (IH) — MADE BY MJD — CHK'D. BY MGK — DATE 11/18/14
	HSSL PROJECT NUMBER S-1140166A-1 — DRAWING NUMBER 3 OF 6

PLOTTED: 1/12/2015 2:19:11 PM BY: mkreidel SHIPMENT 01 PM&ENG: 58035274 PROJ: 58035275 SHIP&RECT.: 58035275

ENGLISH

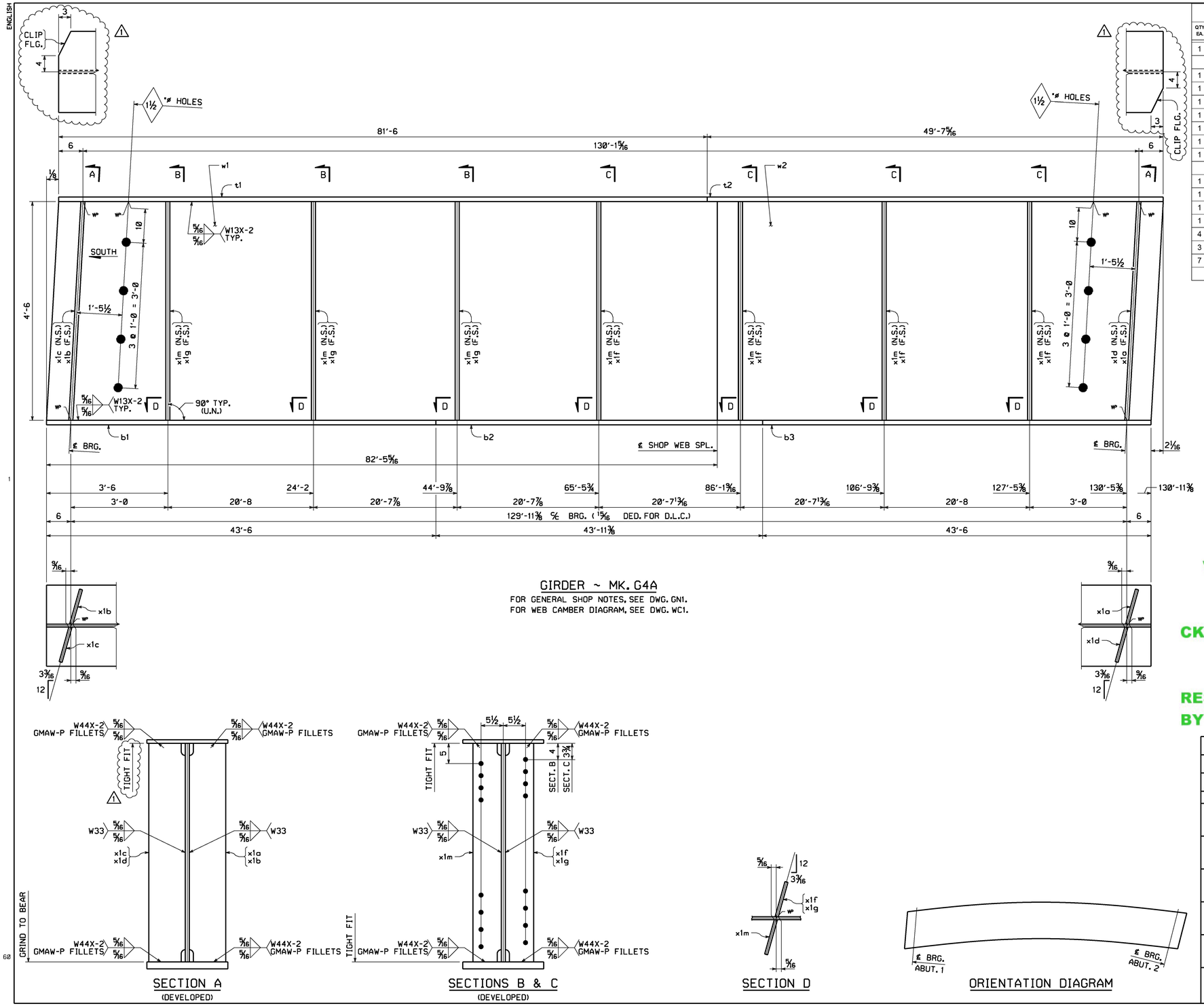

GIRDER ~ MK. G4A

FOR GENERAL SHOP NOTES, SEE DWG. GN1.
FOR WEB CAMBER DIAGRAM, SEE DWG. WC1.

SECTION A
(DEVELOPED)

SECTIONS B & C
(DEVELOPED)

SECTION D

ORIENTATION DIAGRAM

BILL OF MATERIAL

QTY EA.	MARK	COMM	DESCRIPTION	LENGTH	SPEC	GRADE	TEST	REMARKS	ITEM	SHIP WT. EA. (LBS)
1	G4A		GIRDER							39703
1	w1	PL	5/8 x 54	82 5 7/8	M270	50W	T		03001	
1	w2	PL	5/8 x 54	48 8 3/16	M270	50W	T		03002	
1	t1	PL	7/8 x 20	81 6 1/8	M270	50W	T		04003	
1	t2	PL	7/8 x 20	49 7 3/8	M270	50W	T		04004	
1	b1	PL	1 3/4 x 20	43 6 1/16	M270	50W	T		04002	
1	b2	PL	1 3/4 x 20	43 11 7/16	M270	50W	T		04001	
1	b3	PL	1 3/4 x 20	43 6 1/16	M270	50W	T		04002	
1	x1a	PL	7/8 x 9	4 6	M270	50W			07001	
1	x1b	PL	7/8 x 9	4 6	M270	50W			07001	
1	x1c	PL	7/8 x 9	4 6 1/16	M270	50W			07001	
1	x1d	PL	7/8 x 9	4 6 1/16	M270	50W			07001	
4	x1f	PL	1/2 x 7	4 6	M270	50W			07002	
3	x1g	PL	1/2 x 7	4 6	M270	50W			07002	
7	x1m	PL	1/2 x 7	4 6	M270	50W			07002	

Vermont Agency of Transportation

RECEIVED

Structural Steel_Approved 1.23.15.pdf

CK'D BY CLB OK'D BY DRP

January 23, 2015

RESUBMIT NO Approved

BY C. CARLSON DATE 01/23/15

NO.	REVISION	BY	CHK'D	DATE
1	APPROVAL CHANGE: ADDED TIGHT FIT & TOP FLANGE CLIP.	MJD	MGK	1/12/15

HOLES: 15/16"ø (U.N.)
BOLTS: NONE
COATING: NONE
CODE(S): 30
SCALE: N.T.S.

HIGH STEEL STRUCTURES LLC
An ISO 9001:2000 Certified Company
An Affiliate of High Industries Inc.
Lancaster Facility: 1915 Old Philadelphia Pike, Lancaster, PA 17605-0008, Phone (717) 299-5211
Williamsport Facility: 3501 W. 4th Street, Williamsport, PA 17701, Phone (570) 326-9051
www.highsteel.com

GIRDER G4A
VT RT 108 OVER LITTLE RIVER
VT RT 108 STA. 3+48.00 TO STA. 4+78.00
TOWN OF STOWE, LAMOILLE COUNTY, VERMONT
STATE OF VERMONT
AGENCY OF TRANSPORTATION

STATE CONT. OR REF. NO.	BRF 0235 (11)	FED. AID PROJ. NO.			
GENERAL CONTRACTOR	CCS CONSTRUCTORS LLC	HSSL PROJ. MGR	KEN GLIDDEN		
DRAWING MANAGER	DAVE PAINTER (IH)	MADE BY	MJD	CHK'D. BY	MGK	DATE	11/18/14
HSSL PROJECT NUMBER	S-1140166A-1	DRAWING NUMBER	4 OF 6		

VT

PLOTTED: 1/12/2015 2:19:20 PM
BY: mkreidel
SHIPMENT 01
PM&ENG: 58035274 PRD: 58035275 SHIP&RECT.: 58035275

ENGLISH

BILL OF MATERIAL

QTY EA.	MARK	COMM	DESCRIPTION	LENGTH	SPEC	GRADE	TEST	REMARKS	ITEM	SHIP WT. EA. (LBS)
1	G5A		GIRDER							39331
1	w1	PL	5/8 x 54	82 5 7/8	M270	50W	T		03001	
1	w2	PL	5/8 x 54	48 8 3/16	M270	50W	T		03002	
1	t1	PL	7/8 x 20	81 6 1/8	M270	50W	T		04003	
1	t2	PL	7/8 x 20	49 7 3/8	M270	50W	T		04004	
1	b1	PL	1 3/4 x 20	43 6 1/16	M270	50W	T		04002	
1	b2	PL	1 3/4 x 20	43 11 7/16	M270	50W	T		04001	
1	b3	PL	1 3/4 x 20	43 6 1/16	M270	50W	T		04002	
1	x1a	PL	7/8 x 9	4 6	M270	50W			07001	
1	x1b	PL	7/8 x 9	4 6	M270	50W			07001	
1	x1c	PL	7/8 x 9	4 6 1/16	M270	50W			07001	
1	x1d	PL	7/8 x 9	4 6 1/16	M270	50W			07001	
7	x1k	PL	1/2 x 7	4 6	M270	50W			07002	
1	x1n	PL	1/4 x 3 3/4	1 1 3/16	M270	50W			07003	

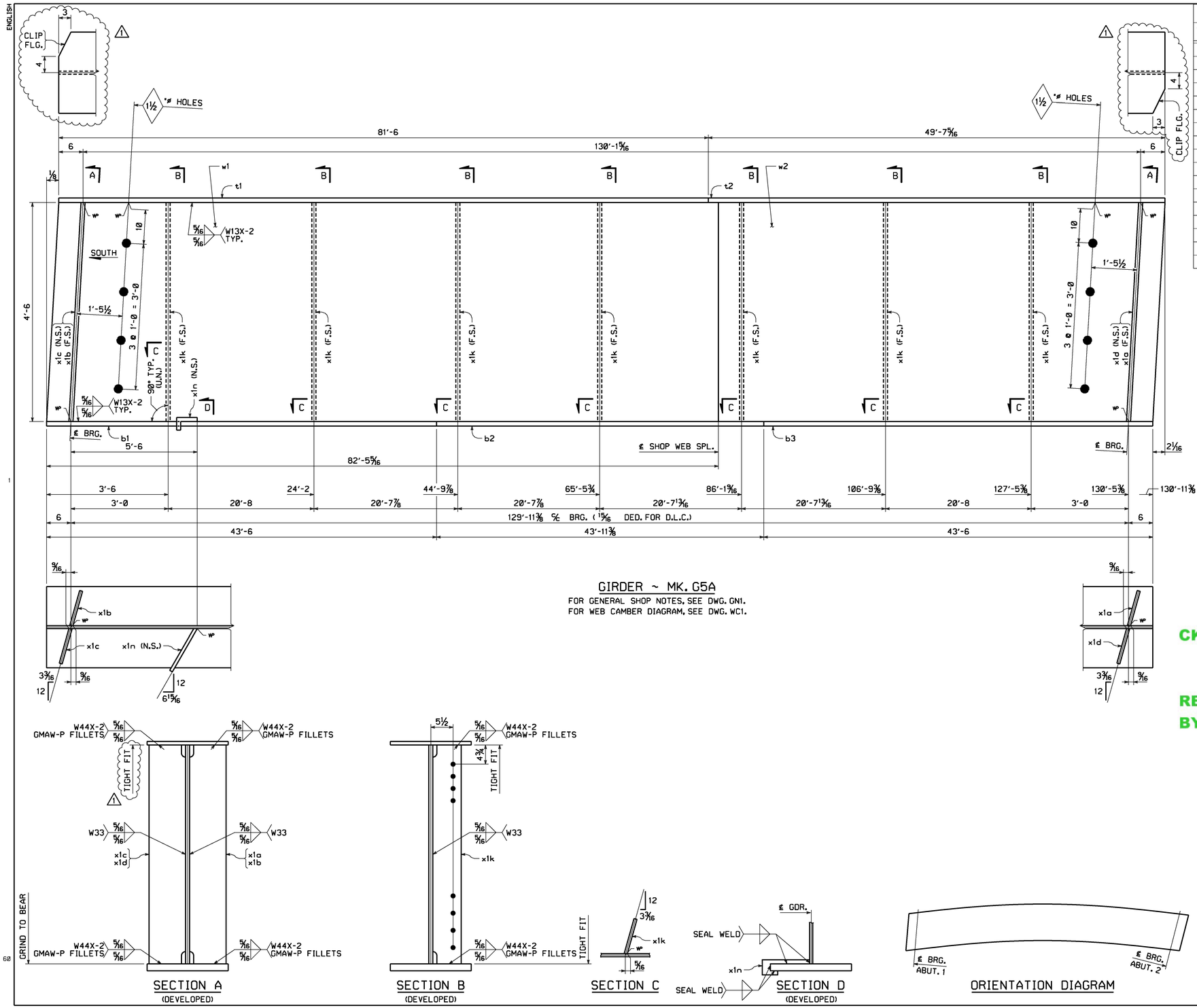

GIRDER ~ MK. G5A

FOR GENERAL SHOP NOTES, SEE DWG. GN1.
FOR WEB CAMBER DIAGRAM, SEE DWG. WC1.

SECTION A
(DEVELOPED)

SECTION B
(DEVELOPED)

SECTION C

SECTION D
(DEVELOPED)

ORIENTATION DIAGRAM

Vermont Agency of Transportation

RECEIVED

Structural Steel_Approved 1-23-15.pdf

CK'D BY CLB OK'D BY DRP

January 23, 2015

RESUBMIT NO Approved

BY C. CARLSON DATE 01/23/15

NO.	REVISION	BY	CHK'D	DATE
1	APPROVAL CHANGE: ADDED TIGHT FIT & TOP FLANGE CLIP.	MJD	MGK	1/12/15

HOLES: 15/16"ø (U.N.)
BOLTS: NONE
COATING: NONE
CODE(S): 30
SCALE: N.T.S.

HIGH STEEL STRUCTURES LLC
An ISO 9001:2000 Certified Company
An Affiliate of High Industries Inc.
Lancaster Facility: 1915 Old Philadelphia Pike, Lancaster, PA 17605-0008, Phone (717) 299-5211
Williamsport Facility: 3501 W. 4th Street, Williamsport, PA 17701, Phone (570) 326-9051
www.highsteel.com

GIRDER G5A
VT RT 108 OVER LITTLE RIVER
VT RT 108 STA. 3+48.00 TO STA. 4+78.00
TOWN OF STOWE, LAMOILLE COUNTY, VERMONT
STATE OF VERMONT
AGENCY OF TRANSPORTATION

STATE CONT. OR REF. NO.	BRF 0235 (11)	FED. AID PROJ. NO.			
GENERAL CONTRACTOR	CCS CONSTRUCTORS LLC	HSSL PROJ. MGR	KEN GLIDDEN		
DRAWING MANAGER	DAVE PAINTER (IH)	MADE BY	MJD	CHK'D. BY	MGK	DATE	11/18/14
HSSL PROJECT NUMBER	S-1140166A-1	DRAWING NUMBER	5 OF 6				

VT

PLOTTED: 1/12/2015 2:19:30 PM
BY: mkreidel
SHIPMENT 01
PM&ENG: 58035274 PRD: 58035275 SHIP&RECT.: 58035275

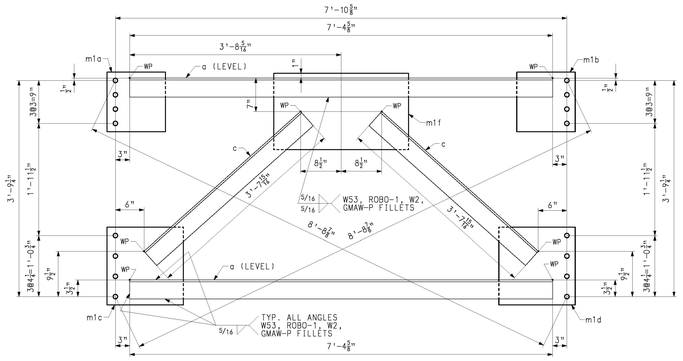

CROSSFRAME MK. - CF1

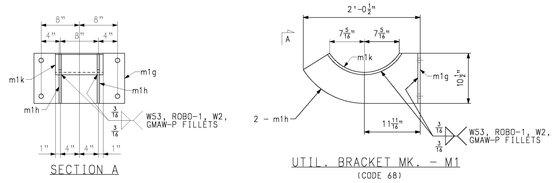

FOR GENERAL SHOP NOTES, SEE DRAWING GN1.

BILL OF MATERIAL

QTY	MARK	COMM.	DESCRIPTION	LENGTH	SPEC	GRADE	TEST	REMARKS	ITEM	WT EA. (LBS)
28	CF1		CROSSFRAMES							396
2	a	L	4 x 4 x 3/8	7 4 5/8	M270	50W			1100.1	
2	c	L	4 x 4 x 3/8	3 7 15/16	M270	50W			1100.1	
1	m1a	PL	1/2 x 12 1/2	1 0 1/4	M270	50W			1100.2	
1	m1b	PL	1/2 x 12 1/2	1 0 1/4	M270	50W			1100.2	
1	m1c	PL	1/2 x 16 1/4	1 4	M270	50W			1100.2	
1	m1d	PL	1/2 x 16 1/4	1 4	M270	50W			1100.2	
1	m1f	PL	1/2 x 16	2 4 1/4	M270	50W			1100.2	

BILL OF MATERIAL

QTY	MARK	COMM.	DESCRIPTION	LENGTH	SPEC	GRADE	TEST	REMARKS	ITEM	WEIGHT EA. (LBS)
14	M1		UTILITY ASSEMBLY							126
1	m1g	PL	1/2 x 10 1/2	1 7	M270	50W			1500.1	
2	m1h	PL	1/2 x 10 1/2	2 0	M270	50W			1500.1	
1	m1k	PL	1/2 x 10	1 6 11/16	M270	50W			1500.1	

Vermont Agency of Transportation

RECEIVED

Structural Steel_Approved 1.23.15.pdf

CK'D BY CLB OK'D BY DRP

January 23, 2015

RESUBMIT NO Approved

BY C. CARLSON DATE 01/23/15

NO.	REVISION	BY	CHK'D	DATE
1	DETAIL ERROR: REV. CF. WEIGHT.	MJD	MGK	1/12/15

HOLES: 13/16" Ø
BOLTS: NONE
COATING: SEE DWG GN1
CODE HS: 63 (U.N. 68)
SCALE: N.T.S.

HIGH STEEL STRUCTURES INC.
An ISO 9001:2000 Certified Company
An RPI Group of High Industries Inc.
905 Old Philadelphia Pike
Lancaster, PA 17606-0008
Phone (717) 299-5211
www.highsteel.com

CROSSFRAME CF1 & MISCELLANEOUS PART M1
VT RT 108 OVER LITTLE RIVER
VT RT 108 STA. 3+48.00 TO STA. 4+78.00
TOWN OF STOWE, LAMOILLE COUNTY, VERMONT
STATE OF VERMONT
AGENCY OF TRANSPORTATION

STATE CONT. OR REF. NO.	BRF 0235 (11)	FED. AID PROJ. NO.	
GENERAL CONTRACTOR	CCS CONSTRUCTORS LLC	HSS PROJ. MGR	KEN GLIDDEN
DRAWING MANAGER	DAVE PAINTER (IH)	MADE BY	MAF
HSS PROJECT NUMBER	S-1140166A-1	DRAWING NUMBER	6 OF 6

CHK'D BY MGK DATE 11/18/14

VT

SHIPMENT 1 PM2ENAH SO2562A PRD1 SO2562B SHIPASPECT1 SO2562B
PLOTTED: MM/DD/YY hh:mm:ss BY: XXXXXXXX

ENGLISH

PREHEAT

AND INTERPASS TEMPERATURES

FOR ASTM A709 GRADE 36, 50, 50W STRUCTURAL STEEL

IN ACCORDANCE WITH AASHTO/AWS D1.5-2010

THICKNESS OF THICKEST PART AT POINT OF WELDING	MINIMUM PREHEAT/INTERPASS AT POINT OF WELDING
to 3/4" inclusive	50°F
over 3/4" to 1-1/2"	70°F
over 1-1/2" to 2-1/2"	150°F
over 2-1/2"	225°F

MAXIMUM PREHEAT TEMPERATURE 450°F
MAXIMUM INTERPASS TEMPERATURE 550°F

REVISED: 7/26/14
ORIGINAL ISSUE: 1/1/92

WELDING PROCEDURE FOR AWS PREQUALIFIED JOINTS

W53

MATERIAL SPECIFICATION ____ ASTM A709 GRADE 36, 50, 50W
WELDING PROCESS ____ SUBMERGED ARC WELDING
SEMIAUTOMATIC OR MACHINE ____ SEMIAUTOMATIC OR MACHINE
POSITION OF WELDING ____ 2F HORIZONTAL
FILLER METAL SPECIFICATION ____ AWS A5.17
CLASSIFICATION ____ F7A2-EM12K-H8
MANUFACTURER/PRODUCT ____ LINCOLN L-61/960
WIRE DIAMETER ____ 5/64" AND 3/32"
SINGLE OR MULTIPLE ARC ____ SINGLE ARC
CURRENT/POLARITY ____ DCEP/DCEN
ROOT TREATMENT ____ REMOVE LOOSE/THICK SCALE RUST & CONTAMINANTS.
PREHEAT TEMPERATURE ____ SEE PREHEAT CHART
ELECTRICAL STICK-OUT ____ 1-INCH

REVISED: 7/2/14
ORIGINAL ISSUE: 1/01/92

PASS NO.	AMPS	WIRE FEED SPEED/min	VOLTS	TRAVEL SPEED/min	WIRE DIAMETER	CURRENT-POLARITY
1	427-580	128-182"	31-35.5	11-13"	5/64"	DCEP
1	427-580	81-127"	31-35.5	11-13"	3/32"	DCEP
1	427-580	132-178"	31-35.5	11-13"	3/32"	DCEN

TYPICAL JOINT DETAILS

USED FOR
CROSSFRAMES, DIAPHRAGMS, CONNECTION PLATES ON GIRDERS, AND MISC. DETAILS

SINGLE-PASS FILLET WELDS UP TO 5/16"

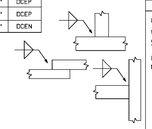

QUALIFIED IN ACCORDANCE WITH 5.22.1 (EXP. 1/8/23/17)
FWST T-13-23, T-13-84, DCEN PQR AWS-13-80, DCEP PQRs AWS-13-81

WELDING PROCEDURE FOR AWS PREQUALIFIED JOINTS

ROBO-1

MATERIAL SPECIFICATION ____ ASTM A709 GRADE 36, 50, 50W
WELDING PROCESS ____ PULSED GAS METAL ARC WELDING
MANUAL OR MACHINE ____ MACHINE
POSITION OF WELDING ____ 2F HORIZONTAL
FILLER METAL SPECIFICATION ____ AWS A5.18
WELD METAL CLASSIFICATION ____ ER70S-6
WIRE/FLUX ____ LINCOLN SUPERARC L-56
WIRE DIAMETER ____ .052"
SINGLE OR MULTIPLE ARC ____ SINGLE ARC
POLARITY ____ DCEP
ROOT TREATMENT ____ REMOVE SCALE, RUST AND CONTAMINANTS.
PREHEAT TEMPERATURE ____ SEE PREHEAT CHART
ELECTRICAL STICK-OUT ____ 3/4"
SHIELDING GAS ____ 92% AR / 8% CO2
GAS FLOW ____ 32-40 CFH

REVISED: 11/03/14
ORIGINAL ISSUE: 3/1/12

PASS NO.	AMPS	WIRE FEED SPEED IPM	VOLTS	TRAVEL SPEED IPM
1	242-273	300-350"	26-27	18.125-11

TYPICAL JOINT DETAILS

USED FOR
CROSSFRAMES

SINGLE-PASS FILLET WELDS UP TO 5/16"

PARAMETERS SHALL BE LOCKED VIA MILLER AXCESS FILE MANAGEMENT.

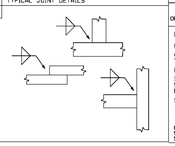

QUALIFIED IN ACCORDANCE WITH 5.22.4
FWST T-12-84, PQR AWS-11-84 (EXP. 8/22/18)

WELDING PROCEDURE FOR AWS PREQUALIFIED JOINTS

W71X-2

MATERIAL SPECIFICATION ____ ASTM A709 GRADE 36, 50, 50W
WELDING PROCESS ____ SUBMERGED ARC WELDING
SEMIAUTOMATIC OR MACHINE ____ SEMIAUTOMATIC OR MACHINE
POSITION OF WELDING ____ 1G (FLAT)
FILLER METAL SPECIFICATION ____ AWS A5.23
CLASSIFICATION ____ F8A2-EN1K-N1-H8
MANUFACTURER/PRODUCT ____ LINCOLN LA-75/960
WIRE DIAMETER ____ 3/32"
SINGLE OR MULTIPLE ARC ____ SINGLE ARC
CURRENT/POLARITY ____ DCEP
ROOT TREATMENT ____ REMOVE ALL SCALE RUST & CONTAMINANTS AND GRIND TO SOUND METAL.
PREHEAT TEMPERATURE ____ SEE PREHEAT CHART
ELECTRICAL STICK-OUT ____ 1-INCH

REVISED: 7/14/14
ORIGINAL ISSUE: 3/18/03

PASS NO.	AMPS	WIRE FEED SPEED/min	VOLTS	TRAVEL SPEED/min	CURRENT-POLARITY
ALL	480-550	88-125"	29-41	14-22"	DCEP

JOINT DETAIL

USED FOR
WEB AND FLANGE SPLICING

BACKGOUGE AND GRIND TO SOUND METAL.
MAY BE USED FOR APPROVED REPAIR WELDS.

B-L2c-S

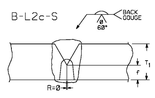

THICKNESS RANGE T1 - t
.125" to 2" = 3/8"
2" to 3.125" = 5/8"
>3.125" to 7" = 1"

QUALIFIED IN ACCORDANCE WITH 5.22.2
PQRs AWS-13-56/AWS-13-55 (EXP. 7/18/18)

WELDING PROCEDURE FOR AWS PREQUALIFIED JOINTS

W71X-2 DC532

MATERIAL SPECIFICATION ____ ASTM A709 GRADE 36, 50, 50W
WELDING PROCESS ____ SUBMERGED ARC WELDING
SEMIAUTOMATIC OR MACHINE ____ MACHINE
POSITION OF WELDING ____ 1G (FLAT)
FILLER METAL SPECIFICATION ____ AWS A5.23
CLASSIFICATION ____ F8A2-EN1K-N1-H8
MANUFACTURER/PRODUCT ____ LINCOLN LA-75/960
WIRE DIAMETER ____ 5/32"
SINGLE OR MULTIPLE ARC ____ SINGLE ARC
CURRENT/POLARITY ____ DCEP
ROOT TREATMENT ____ REMOVE ALL SCALE RUST & CONTAMINANTS AND GRIND TO SOUND METAL.
PREHEAT TEMPERATURE ____ SEE PREHEAT CHART
ELECTRICAL STICK-OUT ____ 1-1/4"

REVISED: 11/24/14
ORIGINAL ISSUE: 3/18/03

PASS NO.	AMPS	WIRE FEED SPEED/min	VOLTS	TRAVEL SPEED/min	CURRENT-POLARITY
ALL	500-600	N/A	29.5-40	14-25"	DCEP
4+	500-750	N/A	29.5-40	14-25"	DCEP

JOINT DETAIL

USED FOR
WEB AND FLANGE SPLICING

BACKGOUGE AND GRIND TO SOUND METAL.
MAY BE USED FOR APPROVED REPAIR WELDS.

B-L2c-S

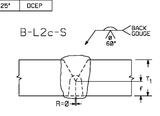

THICKNESS RANGE T1 - t
.125" to 2" = 3/8"
2" to 3.125" = 5/8"
>3.125" to 7" = 1"

QUALIFIED IN ACCORDANCE WITH 5.22.2
PQRs AWS-14-21/AWS-14-22 (EXP. 8/5/18, FCM 8/5/17)

WELDING PROCEDURE FOR AWS PREQUALIFIED JOINTS

W71X-2 AC532-TANDEM

MATERIAL SPECIFICATION ____ ASTM A709 GRADE 36, 50, 50W
WELDING PROCESS ____ SUBMERGED ARC WELDING
SEMIAUTOMATIC OR MACHINE ____ MACHINE
POSITION OF WELDING ____ 1G (FLAT)
FILLER METAL SPECIFICATION ____ AWS A5.23
CLASSIFICATION ____ F8A2-EN1K-N1-H8
MANUFACTURER/PRODUCT ____ LINCOLN LA-75/960
WIRE DIAMETER ____ 5/32"
SINGLE OR MULTIPLE ARC ____ SINGLE ARC/MULTIPLE ARC
CURRENT/POLARITY ____ AC
ROOT TREATMENT ____ REMOVE ALL SCALE RUST & CONTAMINANTS AND GRIND TO SOUND METAL.
PREHEAT TEMPERATURE ____ SEE PREHEAT CHART
ELECTRICAL STICK-OUT ____ 1-1/4"

REVISED: 8/11/14
ORIGINAL ISSUE: 8/03/10

PASS NO.	ELECTRODE	AMPS	WIRE FEED SPEED/min	VOLTS	TRAVEL SPEED/min	KJOULES/in	CURRENT	JOINT DETAILS
1-4+	LEAD	425-600	36-57"	29-36	16-22"	33.6-81	AC	SINGLE-WIRE/ARC
4+	LEAD	425-750	36-81"	29-36	16-22"	33.6-181.3	AC	SINGLE-WIRE/ARC
4+ OPTION	LEAD	491-538	44-48"	29.3-32.1	23-26"	74.84-97.55	AC	MULTIPLE-WIRE TANDEM-ARC (OPTIONAL)
	TRAIL	684-635	66-71"					

USED FOR
WEB AND FLANGE SPLICING

BACKGOUGE AND GRIND TO SOUND METAL.
INDEPENDENT 1000 AMP POWER SOURCES.
SHALL BE USED FOR EACH ELECTRODE WITH LEAD SET TO 66-34 AND TRAIL SET TO 34-66.
90° LEAD TO WORK ANGLE, 10° TRAIL PUSH ANGLE.
TANDEM ARC SPACING IS 3/4" LONGITUDINAL AND 0" LATERAL.

B-L2c-S

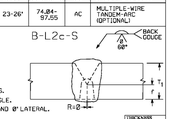

THICKNESS RANGE T1 - t
.125" to 2" = 3/8"
2" to 3.125" = 5/8"
>3.125" to 7" = 1"

QUALIFIED IN ACCORDANCE WITH
5.22.2 SINGLE WIRE AND 5.22.4 TANDEM ARC (EXP. 7/28/17)
SINGLE WIRE PQRs AWS-13-57/AWS-13-52A, TANDEM PQR N7-WP-12-1

WELDING PROCEDURE FOR AWS NON-STANDARD JOINTS

NS-1X

PROCEDURE SPECIFICATIONS

MATERIAL SPECIFICATION ____ ASTM A709 GRADE 36, 50, 50W
WELDING PROCESS ____ SUBMERGED ARC WELDING
MANUAL OR MACHINE ____ MACHINE
POSITION OF WELDING ____ 1G
FILLER METAL SPECIFICATION ____ AWS A5.23
WELD METAL CLASSIFICATION ____ F7A8-EN1K-N1-H8
WIRE/FLUX ____ LINCOLN LA-75/888M
WIRE DIAMETER ____ 5/32"
SINGLE OR MULTIPLE ARC ____ SINGLE ARC
POLARITY ____ AC
ROOT TREATMENT ____ GRIND TO SOUND METAL, REMOVE ALL RUST, SCALE AND CONTAMINANTS.
PREHEAT AND INTERPASS TEMPERATURE ____ SEE PREHEAT CHART
ELECTRICAL STICK-OUT ____ 1-INCH

REVISED: 2/28/12
ORIGINAL ISSUE: 6/3/09

PASS NO.	AMPS	WIRE FEED SPEED	VOLTS	TRAVEL SPEED	NONSTANDARD JOINT NS-08-01
1(A)	728-768	N/A	31-34	19-23	USED FOR 1/2" THICKNESS
2(B)	758-798	N/A	31-34.9	19-23	
1(A)	728-768	N/A	31-34	19-23	USED FOR 9/16" THICKNESS
2(B)	825-858	N/A	31-34	20-23	
1(A)	775-818	N/A	31-34	19-23	USED FOR 5/8" THICKNESS
2(B)	825-858	N/A	31-34	20-23	

USED FOR WEB SPLICING

REQUIREMENTS:
- NO BACKGOUGING REQUIRED.
- MAXIMUM ROOT OPENING (R) AS FIT UP SHALL BE 1/16".

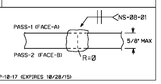

QUALIFIED IN ACCORDANCE WITH 5.13.
PROCEDURE QUALIFICATION RECORD NS-WP-12-16, NS-WP-12-17 (EXPIRES 10/28/15)

Vermont Agency of Transportation

RECEIVED

CK'D BY J. CLARK OK'D BY D. PETERSON

December 10, 2014

RESUBMIT NO Approved

BY C. CARLSON DATE 12/17/2014

WELDING PROCEDURE QUESTIONS MAY BE REFERRED TO:
PAUL MUFFULETTO, HIGH STEEL STRUCTURES LLC
PMUFFULETTO@HIGH.NET
PHONE: (717)390-4253

NO.	REVISION	BY	CHK'D	DATE

HOLES
BOLTS
COATING
CODE(S)
SCALE N.T.S.

HIGH STEEL STRUCTURES LLC
An ISO 9001:2000 Certified Company
An Affiliate of High Industries Inc.
Corporate Facility: 400 Old Harrisburg Pike, Lancaster, PA 17603-0008, Phone (717) 299-521
Manufacturing Facility: 1020 E. 4th Street, Lititz, PA 17543-9700, Phone (717) 626-1000
www.highsteel.com

WELDING PROCEDURES
VT RT 108 OVER LITTLE RIVER
VT RT 108 STA. 3+48.00 TO STA. 4+78.00
TOWN OF STOWE, LAMOILLE COUNTY, VERMONT
STATE OF VERMONT
AGENCY OF TRANSPORTATION

STATE CONT. OR REF. NO.	BRF 0235 (11)	FED. AID PROJ. NO.	
GENERAL CONTRACTOR	CCS CONSTRUCTORS LLC	HSS PROJ. MGR	KEN GLIDDEN
DRAWING MANAGER	DAVE PAINTER (IH)	MADE BY	PM
CHK'D BY		DATE	12/09/14
HSS PROJECT NUMBER	S-11401664-1	DRAWING NUMBER	WP2

VT

SHIPMENT #1 PHASING 0835223 PROJ 0835235 SHPAREC1-J

PLOTTED: 12/5/2014 10:07:07 PM By: paulfule

62

ENGLISH

PREHEAT

AND INTERPASS TEMPERATURES

FOR ASTM A709 GRADE 36, 50, 50W STRUCTURAL STEEL

IN ACCORDANCE WITH AASHTO/AWS D1.5-2010

THICKNESS OF THICKEST PART AT POINT OF WELDING	MINIMUM PREHEAT/INTERPASS AT POINT OF WELDING
to 3/4" inclusive	50°F
over 3/4" to 1-1/2"	70°F
over 1-1/2" to 2-1/2"	150°F
over 2-1/2"	225°F

MAXIMUM PREHEAT TEMPERATURE 450°F
MAXIMUM INTERPASS TEMPERATURE 550°F

REVISED: 7/26/14
ORIGINAL ISSUE: 1/1/92

WELDING PROCEDURE FOR AWS PREQUALIFIED JOINTS

W2

MATERIAL SPECIFICATION ..... ASTM A709 GRADE 36, 50, 50W
WELDING PROCESS ..... SHIELDED METAL ARC WELDING
MANUAL OR MACHINE ..... MANUAL
POSITION OF WELDING ..... ALL (EXCEPT VERTICAL DOWN)
FILLER METAL SPECIFICATION ..... AWS A5.1 AND A5.5
WELD METAL CLASSIFICATION ..... E7018-H4R AND E8018-C3-H4
WIRE/FLUX ..... EXCALIBUR E7018-MR AND E8018-C3-MR
ROOT TREATMENT ..... REMOVE LOOSE/THICK SCALE, RUST & CONTAMINANTS. GRIND TO SOUND METAL FOR GROOVE APPLICATION.
CURRENT/POLARITY ..... REMOVE ALL SCALE FOR WEB TO FLANGE APPLICATION. DCEP OR AC
PREHEAT AND INTERPASS TEMPERATURE ..... •SEE PREHEAT CHART

REVISED: 8/11/14
ORIGINAL ISSUE: 1/01/92

PASS NO.	WIRE DIA.	CURRENT/POLARITY DCEP - AMPS	AC - AMPS	TRAVEL SPEED/min.	ELECTRODE WIRE/MOD	TYPICAL APPLICATIONS TYPICAL JOINT DETAILS
1	1/8"	90-150	110-150	6-9"	E7018-MR	TACK WELDS ONLY
ALL	5/32"	130-160	150-200	8-13"		
1	1/8"	90-150	110-150	6-9"	E8018-C3-MR	TACK WELDS, GROOVE WELDS, FILLET WELDS AND REPAIR WELDS
ALL	5/32"	130-160	150-200	8-13"		
ALL	3/16"	200-300	200-300	9-15"		

~ SPECIFIC JOINT DETAILS (FILLET, CJP, PJP) AND WELD SIZE SHALL BE DETAILED ON APPROVED SHOP DRAWINGS.

~ FILLET WELDS UP TO 5/16" IN SIZE SHALL BE MADE IN A SINGLE-PASS AND MULTI-PASS FOR FILLET WELDS OVER 5/16".

~ •PREHEAT IS NOT REQUIRED FOR 3/16" TACK WELDS REMELTED BY THE SUBMERGED ARC PROCESS.

FILLET
CJP
PJP

PREQUALIFIED WPS IN ACCORDANCE WITH 5.11

WELDING PROCEDURE FOR AWS PREQUALIFIED JOINTS

GMAW-P 2F TACKS

MATERIAL SPECIFICATION ..... ASTM A709 GRADE 36, 50, 50W
WELDING PROCESS ..... GAS METAL ARC WELDING - PULSED SPRAY
POWER SOURCE/WAVEFORM ..... MILLER ACCESS 450/ACCU-PULSE/LOCKED FILE
SEMIAUTOMATIC OR MACHINE ..... SEMIAUTOMATIC OR MACHINE
POSITION OF WELDING ..... 2F (HORIZONTAL)
FILLER METAL SPECIFICATION ..... AWS A5.18
CLASSIFICATION ER70S-6
MANUFACTURER/PRODUCT ..... LINCOLN SUPERARC L-56
WIRE DIAMETER ..... .052"
SINGLE OR MULTIPLE ARC ..... SINGLE ARC
CURRENT/POLARITY ..... DCEP
ROOT TREATMENT ..... REMOVE LOOSE/THICK SCALE, RUST & CONTAMINANTS, REMOVE ALL SCALE FOR WEB TO FLANGE.
PREHEAT TEMPERATURE ..... •SEE PREHEAT CHART
ELECTRICAL STICK-OUT ..... 3/4"
SHIELDING GAS ..... 92% AR / 8% CO2
GAS FLOW ..... 32-40 CFH

REVISED: 6/19/14
ORIGINAL ISSUE: 5/21/08

PASS NO.	AMPS	WIRE FEED SPEED/min	VOLTS	TRAVEL SPEED/min.	TYPICAL JOINT DETAILS
1	223-268	255-308"	24.2-26	19.25-22"	3/16" TACK WELDS -- 2F

USED FOR SINGLE-PASS TACKS

WEB TO FLANGE, CROSSFRAMES AND MISC. DETAILS

•TACKS THAT ARE COMPLETELY REMELTED BY THE SUBMERGED ARC WELDING PROCESS (530Amps/37.4Volts) ONLY REQUIRE 50°F PREHEAT. REFER TO PREHEAT CHART FOR EVERYTHING ELSE.

QUALIFIED IN ACCORDANCE WITH 5.12.4
SOUNDNESS TESTS T-89-038, T-89-84, T-89-21, T-13-66
WELDING PROCEDURE QUALIFICATION RECORD AWS-14-89 (EXP. 4/30/19)

WELDING PROCEDURE FOR AWS PREQUALIFIED JOINTS

GMAW-P 4F TACKS

MATERIAL SPECIFICATION ..... ASTM A709 GRADE 36, 50, 50W
WELDING PROCESS ..... GAS METAL ARC WELDING - PULSED SPRAY
POWER SOURCE/WAVEFORM ..... MILLER ACCESS 450/ACCU-PULSE/LOCKED FILE
SEMIAUTOMATIC OR MACHINE ..... SEMIAUTOMATIC OR MACHINE
POSITION OF WELDING ..... 4F (OVERHEAD)
FILLER METAL SPECIFICATION ..... AWS A5.18
CLASSIFICATION ER70S-6
MANUFACTURER/PRODUCT ..... LINCOLN SUPERARC L-56
WIRE DIAMETER ..... .052"
SINGLE OR MULTIPLE ARC ..... SINGLE ARC
CURRENT/POLARITY ..... DCEP
ROOT TREATMENT ..... REMOVE LOOSE/THICK SCALE, RUST & CONTAMINANTS, REMOVE ALL SCALE FOR WEB TO FLANGE.
PREHEAT TEMPERATURE ..... •SEE PREHEAT CHART
ELECTRICAL STICK-OUT ..... 5/8"
SHIELDING GAS ..... 92% AR / 8% CO2
GAS FLOW ..... 35-43 CFH

REVISED: 6/19/14
ORIGINAL ISSUE: 5/5/09

PASS NO.	AMPS	WIRE FEED SPEED/min	VOLTS	TRAVEL SPEED/min.	TYPICAL JOINT DETAILS
1	180-220	200-225"	20.5-22.5	17-28"	3/16" TACK WELDS -- 4F

USED FOR SINGLE-PASS TACKS

WEB TO FLANGE, CROSSFRAMES AND MISC. DETAILS

MEMBERS ARE TACKED IN THE OVERHEAD POSITION THEN RE-POSITIONED FOR FINAL WELDING.

•TACKS THAT ARE COMPLETELY REMELTED BY THE SUBMERGED ARC WELDING PROCESS (530Amps/37.4Volts) ONLY REQUIRE 50°F PREHEAT. REFER TO PREHEAT CHART FOR EVERYTHING ELSE.

QUALIFIED IN ACCORDANCE WITH 5.12.4
WELDING PROCEDURE QUALIFICATION RECORD AWS-13-59 (EXP. 7/18/18)

WELDING PROCEDURE FOR AWS PREQUALIFIED JOINTS

W6

MATERIAL SPECIFICATION ..... ASTM A709 GRADE 36, 50, 50W
WELDING PROCESS ..... FLUX CORED ARC WELDING
MANUAL, SEMI-AUTOMATIC, MACHINE ..... SEMI-AUTOMATIC OR MACHINE
POSITION OF WELDING ..... ALL
FILLER METAL SPECIFICATION ..... AWS A5.20
WELD METAL CLASSIFICATION E71T-1
WIRE/FLUX ..... HOBART FORMULA XL550
WIRE DIAMETER ..... .052"
SINGLE OR MULTIPLE ARC ..... SINGLE ARC
CURRENT/POLARITY ..... DCEP
ROOT TREATMENT ..... REMOVE LOOSE/THICK SCALE, RUST & CONTAMINANTS. FOR CJP/PJP APPLICATIONS GRIND TO SOUND METAL.
PREHEAT/INTERPASS TEMPERATURE ..... •SEE PREHEAT CHART
ELECTRICAL STICK-OUT ..... 3/4"
SHIELDING GAS 100% CO2
GAS FLOW ..... 40-50 CFH

REVISED: 6/30/14
ORIGINAL ISSUE: 5/3/06

PASS NO.	AMPS	WIRE FEED SPEED/min	VOLTS	TRAVEL SPEED/min.	TYPICAL APPLICATION/DETAIL
1	225-258	285-335"	25-27	14.75-16.5"	3/16" TACK WELDS

SINGLE-PASS TACK WELDS FOR STIFFENERS, CONNECTION PLATES, CJP/PJP, AND MISC. DETAILS.

TACKS
CJP TACKS
PJP TACKS

~ SPECIFIC CJP/PJP JOINT DETAILS SHALL BE DETAILED ON APPROVED SHOP DRAWINGS.

~ SHALL NOT BE USED FOR TACKING WEB TO FLANGE.

~ •PREHEAT IS NOT REQUIRED FOR 3/16" TACK WELDS REMELTED BY THE SUBMERGED ARC PROCESS.

QUALIFIED IN ACCORDANCE WITH 5.12.4
PROCEDURE QUALIFICATION RECORD AWS-13-59 (EXPIRES 7/16/18)

WELDING PROCEDURE FOR AWS PREQUALIFIED JOINTS

GMAW-P FILLETS

MATERIAL SPECIFICATION ..... ASTM A709 GRADE 36, 50, 50W
WELDING PROCESS ..... PULSED GAS METAL ARC WELDING
MANUAL OR MACHINE ..... SEMIAUTOMATIC OR MACHINE
POSITION OF WELDING ..... 2F (HORIZONTAL)
FILLER METAL SPECIFICATION ..... AWS A5.18
WELD METAL CLASSIFICATION ER70S-6
WIRE/FLUX ..... LINCOLN SUPERARC L-56, L-59
WIRE DIAMETER ..... .045"/.052"
SINGLE OR MULTIPLE ARC ..... SINGLE ARC
POLARITY ..... DCEP
ROOT TREATMENT ..... REMOVE LOOSE/THICK SCALE, RUST & CONTAMINANTS.
PREHEAT TEMPERATURE ..... SEE PREHEAT CHART
ELECTRICAL STICK-OUT ..... 3/4"
SHIELDING GAS ..... 92% AR / 8% CO2
GAS FLOW ..... 32-40 CFH

REVISED: 12/14/14
ORIGINAL ISSUE: 8/6/08

PASS NO.	WIRE DIAMETER	WIRE FEED SPEED/min	AMPS	VOLTS	TRAVEL SPEED/min.	JOINT DETAIL
1	.045"	358-448"	225-268	25.2-26.5	14-16.5"	
	.052"	275-329"				

USED FOR SINGLE-PASS FILLETS UP TO 5/16" AND 3/16" TACKS

STIFFENERS/CONNECTION PLATES TO WEB AND FLANGE, MISCELLANEOUS DETAILS

~ MILLER AXCESS 450 POWER SOURCE REQUIRED. WELDING PARAMETERS SHALL BE LOCKED VIA MILLER AXCESS FILE MANAGEMENT.

~ MULTIPLE-PASS FILLETS 3/8" AND GREATER MAY BE USED FOR PAINTED MEMBERS WITH L-56 WIRE.

FWST T-13-85, T-13-86
QUALIFIED IN ACCORDANCE WITH 5.12.4
WELDING PROCEDURE QUALIFICATION RECORD AWS-11-85 (EXPIRES 11/29/18)

WELDING PROCEDURE FOR AWS PREQUALIFIED JOINTS

W13X-2

MATERIAL SPECIFICATION ..... ASTM A709 GRADE 36, 50, 50W
WELDING PROCESS ..... SUBMERGED ARC WELDING
SEMIAUTOMATIC OR MACHINE ..... SEMIAUTOMATIC OR MACHINE
POSITION OF WELDING ..... 2F (HORIZONTAL)
FILLER METAL SPECIFICATION ..... AWS A5.23
CLASSIFICATION F8A2-EN1K-N1-H8
MANUFACTURER/PRODUCT ..... LINCOLN LA-75/960
WIRE DIAMETER ..... 3/32"
SINGLE OR MULTIPLE ARC ..... SINGLE ARC
CURRENT/POLARITY ..... DCEN/DCEP
ROOT TREATMENT ..... REMOVE ALL SCALE RUST & CONTAMINANTS FOR WEB TO FLANGE AND LOOSE/THICK SCALE RUST & CONTAMINANTS FOR OTHER APPLICATIONS.
PREHEAT TEMPERATURE ..... SEE PREHEAT CHART
ELECTRICAL STICK-OUT 1-INCH

REVISED: 6/19/14
ORIGINAL ISSUE: 1/26/99

PASS NO.	AMPS	WIRE FEED SPEED/min	VOLTS	TRAVEL SPEED/min.	CURRENT-POLARITY	JOINT DETAIL
1	•530-552	•185-195"	•37.4-39	17-22"	DCEN	
2+	580-552	187-125"	38-38	14-22"	DCEP	

PRIMARILY USED FOR CONVENTIONAL

WEB TO FLANGE

SINGLE-PASS FILLET WELDS UP TO 5/16"
MULTI-PASS FILLET WELDS 3/8" AND GREATER

•DCEN PARAMETERS MAY BE REDUCED TO 425-550 AMPS/139-195"/PS AND 32-37.6 VOLTS WHEN TACKING WITH THE SMAW PROCESS. THIS IS GENERALLY HELPFUL WHEN WELDING THINNER MATERIALS.

QUALIFIED IN ACCORDANCE WITH 5.12.2 (EXP. 7/18/18)
FWST T-13-76, T-13-87, T-89-18, DCEN PGR= AWS-13-68/AWS-13-69, DCEP PGR= AWS-13-55/AWS-13-56

WELDING PROCEDURE FOR AWS PREQUALIFIED JOINTS

W13X-2 GB

MATERIAL SPECIFICATION ..... ASTM A709 GRADE 36, 50, 50W
WELDING PROCESS ..... SUBMERGED ARC WELDING
SEMIAUTOMATIC OR MACHINE ..... MACHINE
POSITION OF WELDING ..... 2F (HORIZONTAL)
FILLER METAL SPECIFICATION ..... AWS A5.23
CLASSIFICATION F8A2-EN1K-N1-H8
MANUFACTURER/PRODUCT ..... LINCOLN LA-75/960
WIRE DIAMETER ..... 5/32"
SINGLE OR MULTIPLE ARC ..... SINGLE ARC
CURRENT/POLARITY ..... DCEN/DCEP
ROOT TREATMENT ..... REMOVE ALL SCALE RUST & CONTAMINANTS.
PREHEAT TEMPERATURE ..... SEE PREHEAT CHART
ELECTRICAL STICK-OUT ..... 1-1/4"

REVISED: 6/19/14
ORIGINAL ISSUE: 2/03/10

PASS NO.	AMPS	VOLTS	TRAVEL SPEED/min.	CURRENT-POLARITY	JOINT DETAIL
1	684-768	34.4-37	24-27"	DCEN	
2+	530-608	32-34	22-25"	DCEP	

PRIMARILY USED FOR GANTRY

WEB TO FLANGE

SINGLE-PASS FILLET WELDS UP TO 5/16"
MULTI-PASS FILLET WELDS 3/8" AND GREATER

QUALIFIED IN ACCORDANCE WITH 5.12.1 (EXP. 7/26/18)
FWST T-13-75, T-13-66 DCEN PGR AWS-13-64, DCEP PGR AWS-13-65

WELDING PROCEDURE FOR AWS PREQUALIFIED JOINTS

W33

MATERIAL SPECIFICATION ..... ASTM A709 GRADE 36, 50, 50W
WELDING PROCESS ..... SUBMERGED ARC WELDING
SEMIAUTOMATIC OR MACHINE ..... SEMIAUTOMATIC OR MACHINE
POSITION OF WELDING ..... 2F (HORIZONTAL)
FILLER METAL SPECIFICATION ..... AWS A5.17
CLASSIFICATION F7A2-EM12K-H8
MANUFACTURER/PRODUCT ..... LINCOLN L-61/761
WIRE DIAMETER ..... 3/32"
SINGLE OR MULTIPLE ARC ..... SINGLE ARC
CURRENT/POLARITY ..... DCEN
ROOT TREATMENT ..... REMOVE LOOSE/THICK SCALE, RUST AND CONTAMINANTS
PREHEAT TEMPERATURE ..... SEE PREHEAT CHART
ELECTRICAL STICK-OUT 1-INCH

REVISED: 7/02/14
ORIGINAL ISSUE: 2/01/88

PASS NO.	AMPS	WIRE FEED SPEED/min	VOLTS	TRAVEL SPEED/min.	CURRENT-POLARITY	JOINT DETAIL
1	420-448	129-148"	29.4-34	14-18"	DCEN	

USED FOR

STIFFENERS/CONNECTION PLATES TO WEB AND MISC. DETAILS

SINGLE-PASS FILLET WELDS UP TO 5/16"

QUALIFIED IN ACCORDANCE WITH 5.12.1
FWST T-14-23, PGR AWS-13-67 (EXP. 8/28/18)

WELDING PROCEDURE FOR AWS PREQUALIFIED JOINTS

W44X-2

MATERIAL SPECIFICATION ..... ASTM A709 GRADE 36, 50, 50W
WELDING PROCESS ..... SUBMERGED ARC WELDING
SEMIAUTOMATIC OR MACHINE ..... SEMIAUTOMATIC OR MACHINE
POSITION OF WELDING ..... 2F (HORIZONTAL)
FILLER METAL SPECIFICATION ..... AWS A5.23
CLASSIFICATION F8A2-EN1K-N1-H8
MANUFACTURER/PRODUCT ..... LINCOLN LA-75/960
WIRE DIAMETER ..... 3/32"
SINGLE OR MULTIPLE ARC ..... SINGLE ARC
CURRENT/POLARITY ..... DCEN/DCEP
ROOT TREATMENT ..... REMOVE LOOSE/THICK SCALE RUST & CONTAMINANTS.
PREHEAT TEMPERATURE ..... SEE PREHEAT CHART
ELECTRICAL STICK-OUT 1-INCH

REVISED: 7/2/14
ORIGINAL ISSUE: 1/26/99

PASS NO.	AMPS	WIRE FEED SPEED/min	VOLTS	TRAVEL SPEED/min.	CURRENT-POLARITY	JOINT DETAIL
1+	412-457	134-153"	31.8-34.2	13-18"	DCEN	
2+	488-558	88-125"	29-36.6	14-22"	DCEP	

USED FOR

STIFFENER TO FLANGE AND MISC. DETAILS

SINGLE-PASS FILLET WELDS UP TO 5/16"
MULTI-PASS FILLET WELDS 3/8" AND GREATER

QUALIFIED IN ACCORDANCE WITH 5.12.1 DCEN & 5.12.2 DCEP (EXP. 7/18/18)
FWST T-18-85, T-18-84, DCEN PGR AWS-13-68, DCEP PGR= AWS-13-56/AWS-13-55

Vermont Agency of Transportation

RECEIVED

CK'D BY J. CLARK OK'D BY D. PETERSON

December 10, 2014

RESUBMIT NO Approved

BY C. CARLSON DATE 12/17/2014

WELDING PROCEDURE QUESTIONS MAY BE REFERRED TO:
PAUL MUFFULETTO, HIGH STEEL STRUCTURES LLC
PMUFFULETTO@HIGH.NET
PHONE: (717)390-4253

NO.	REVISION	BY	CHK'D	DATE

HOLES
BOLTS
COATING
CODE(S)
SCALE N.T.S.

HIGH STEEL STRUCTURES LLC
An ISO 9001:2008 Certified Company
An AISC Certified Plant
An AISC Certified Plant
An ATLAS of High Industries Inc. Company

Manheim Facility
915 Old Philadelphia Pike
Lancaster, PA 17602-2808
Phone (717) 715-1396

Williamsport Facility
1500 W. 4th Street
Williamsport, PA 17701
Phone (570) 326-5091
www.highsteel.com

WELDING PROCEDURES
VT RT 100 OVER LITTLE RIVER
VT RT 100 STA. 3+48.00 TO STA. 4+78.00
TOWN OF STOWE, LAMOILLE COUNTY, VERMONT
STATE OF VERMONT
AGENCY OF TRANSPORTATION

STATE CONT. OR REF. NO.: BRF 0235 (11) FED. AID PROJ. NO.:
GENERAL CONTRACTOR: CCS CONSTRUCTORS LLC HSSL PROJ. MGR: KEN GLIDDEN
DRAWING MANAGER: DAVE PAINTER (IH) MADE BY: PM CHK'D BY: DATE: 12/09/14
HSSL PROJECT NUMBER: S-1140166A-1 DRAWING NUMBER: WP1

VT

PLOTTED: 12/9/2014 10:41 PM
By: pmuffule
SHIPMENT #1
PHASING: 5835224 PROJ: 5835235 SHOPABSTRACT: 5835235
62

S.D. Ireland Companies
Precast Division

193 Industrial Ave. Williston, VT 05495
P.O. Box 2286 South Burlington, VT 05407
p: 802-863-6222 f: 802-860-1528
www.sdireland.com

Attention:	Brian Richardson	Date:	1/12/2015
Company:	C.C.S. Constructors	Job Name:	Stowe BRF 0235(11)
Address:	138 Munson Ave	Job Number:	#15163
City, St, Zip:	Morrisville, VT 05661	Regarding:	Abutment, Wing Wall, and Retaining Wall Submittal #2
Ph: / Fax:	802-888-7701		

WE ARE SENDING:
- [ ] Quote
- [x] Details
- [ ] Other: _____
- [x] Submittals
- [ ] Prints
- [ ] Plans
- [ ] Specifications
- [ ] Copy Of Letter
- [ ] Change Order
- [ ] Samples
- [ ] Revised Submittals

Copies	Date	Pages	Description
1	1/12/2015	1	Transmittal Cover Page
1	1/8/2015	11	S.D.I. Abutment, Wing Wall, and Approach Slab Drawings
1	1/12/2015	5	Dimension Fabricators Reinforcement Drawings
1	4/17/2014	1	State Concrete Mix Design
1	11/21/2014	1	Tensioning Plate Detail
1		2	Grout Splice Sleeve Detail
1	1/8/2015	13	Lifting Analysis Calculations and details

These Are Submitted as Checked Below:
- [ ] For Approval
- [ ] Approved as Submitted
- [x] Resubmit __ Copies for Approval
- [x] For Your Use
- [ ] Approved as Noted
- [ ] Submit__ Copies for Distribution
- [ ] As Requested
- [ ] Returned for Corrections
- [ ] Return __ Corrected Prints
- [ ] For Review and Comment
- [ ] Prints Returned After Loan to Us
- [ ] For Bids Due: _____
- [ ] Other:

Notes/Remarks:

Brian,

Please pass on to the state for approvals.

Let me know if you have any questions.

Thank you.

Eric Barendse x265

Copy To: _____

Signed: Eric Barendse

If enclosures are not as noted, kindly notify us at once.

Precast Bridge Abutments

Stowe BRF 0235(II)

Concrete:

Mix Designation: P50TER

1. Specified Mix Design	5000 PSI
2. Proposed Mix Design	6000 PSI
3. Striping Strength	4250 PSI
4. Handling Strength	4250 PSI ⚠
5. Shipping Strength	5000 PSI
6. Install Strength	5000 PSI
7. Traffic Loading	5000 PSI

Fabrication Tolerances:

1. Width	±1/4"
2. Height	±1/4"
3. Length	±1/2"
4. Rebar Cover	3" Min. (Unless Noted Otherwise)
5. Rebar Spacing	±1"
6. Rebar Clearance	±1/4"
7. Insert Placement	±1/4"

Vermont Agency of Transportation

RECEIVED

Abutment Submittal 201215_Markup.pdf

CK'D BY CLB OK'D BY DRP

January 13, 2015

RESUBMIT NO Approved AsNoted

BY C. CARLSON DATE 01/15/15

Reinforcing:

General Notes:

1. Reinforcing Steel - ASTM A615, Grade 60, Level II, Dual Coated
2. Materials and Manufacturing shall conform to ASTM C1433
3. Bar tied at every intersection.
4. Grout Sleeves to be epoxy coated.
5. 5' long test bars for each bar size size will be provided along with (3) grout couplers for each size bar. ⚠

Tolerances:

1. Spacing ±1"
2. Clearance ±1/4"
3. Clear Cover 3" U.N.O.

Lap Lengths:

1. Per AASHTO 5.11.2.1.1 & 5.11.5.3.1
   Lap Length for Level II (Dual Coated):
   #4 Bar=17"
   #5 Bar=26"
   #6 Bar=39"
   #7 Bar=53"
   #8 Bar=69"

Note: See pg 6 for typical vertical lap lengths for bars extending into cast in place abutment sections ⚠

General Notes:

Per general notes, all exposed edges shall be chamfered 1" x 1" unless otherwise noted

1. All precast pieces will be dry fit prior to shipping.
2. All lifting anchor points to be grouted after use.(by site contractor
3. All rebar spacing chairs to be plastic
4. All exposed edges to be chamfered $\frac{3}{4}$" ⚠

Post Tensioning

1. All anchoring assemblies will be galvanized plated.
2. Two tensioning strands per duct.
3. Tension ducts will be 3" SCH 40 PVC conduit.
4. Post tension strands will be .5"Ø, 270 ksi, low relaxation, 7-wire strands.
5. Strands will be tensioned to 32 kips prior to the H-pile sleeves being filled with HPC RS.
6. Tensioning block outs to be filled with grout of vertical overhead repair material after tensioning is complete. ⚠

Agree provide two, 5-foot test bars for each bar size. It should be noted that none of the quantities provided on the reinforcing sheet schedules account for the additional bars, so that should be kept in mind.

CONTRACTORS VTSPE:	⚠- Rev. 1 - 01/ 08 /15 - Changes per VTrans Review	PRECAST CONCRETE ABUTMENT SHOP DRAWINGS (SDI JOB #15163)			
		SUPERVISOR: M. WHEELER DETAILER: I. ADAMS CHECKER: E. Barendse ENGINEER:	PROJECT NAME: Stowe BRF 0235 (II) PROJECT #: 0235 (II) LOCATION: Stowe, VT	INSTALLER: CCS Construction, 138 Munson Ave, Morrisville, VT 05661, Ph: 802-888-7701 01/08/15	FABRICATOR: 193 INDUSTRIAL AVE. WILLISTON, VT 05495 Ph: (802) 658-0201 SD Ireland Precast Division Abutment Text — 1 of 11

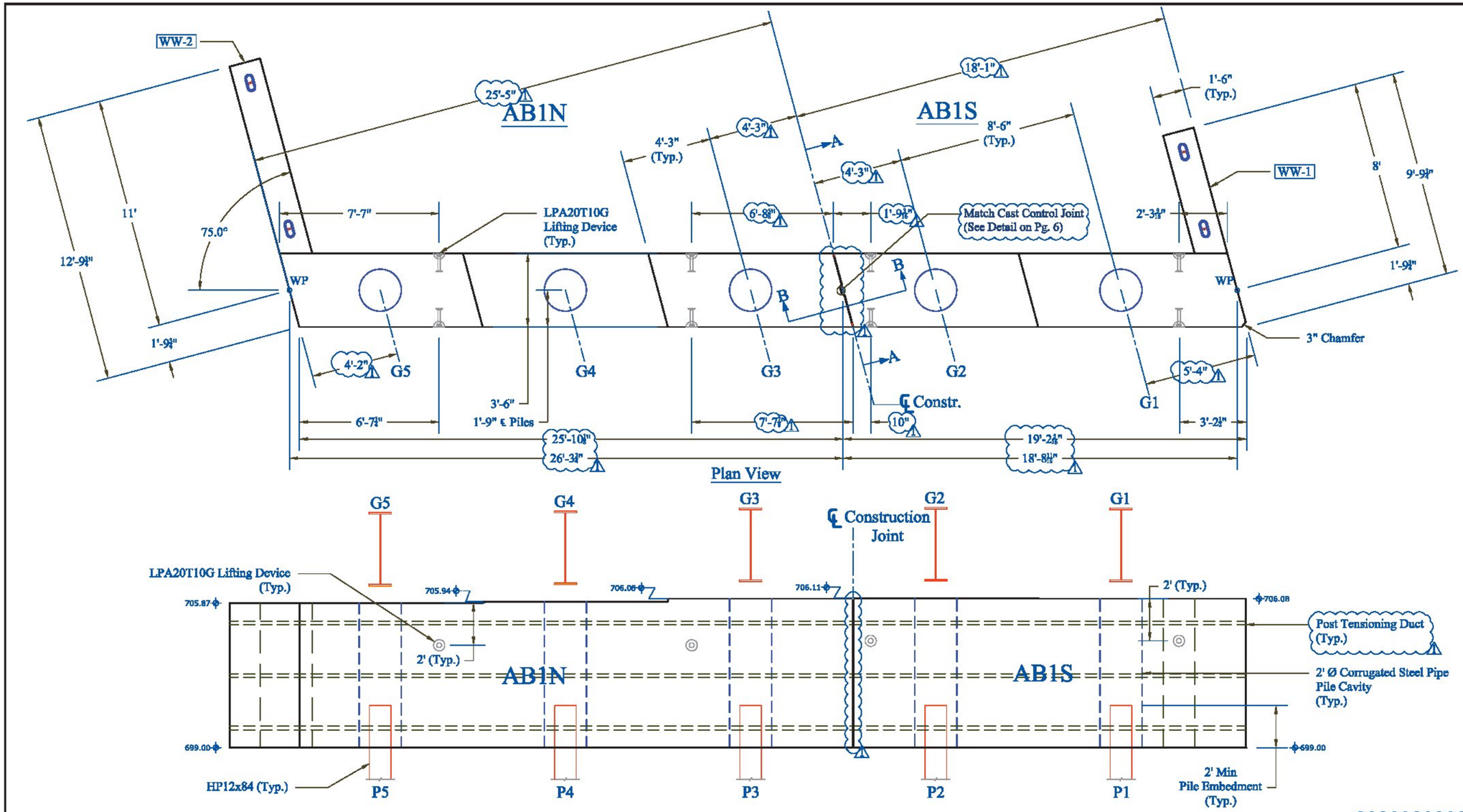

AB1N: 84,926 lbs
AB1S: 62,374 lbs

Vermont Agency of Transportation

RECEIVED

Abutment Submittal 20131215_Markup.pdf

CK'D BY CLB OK'D BY DRP

January 13, 2015

RESUBMIT NO Approved

BY C. CARLSON DATE 01/15/15

PRECAST CONCRETE ABUTMENT SHOP DRAWINGS (SDI JOB #15163)		INSTALLER:	FABRICATOR:		
SUPERVISOR: M. WHEELER	PROJECT NAME: Stowe BRF 0235 (II)	CCS Construction 138 Munson Ave Morrisville, VT 05661 PH: 802-888-7701	193 INDUSTRIAL AVE. WILLISTON, VT 05495 Ph: (802) 658-0201	SD Ireland Precast Division	
DETAILER: I. ADAMS					
CHECKER: E. Barendse	PROJECT #: 0235 (II)				
ENGINEER:	LOCATION: Stowe, VT	01/08/15	Abutment 1		2 of 11

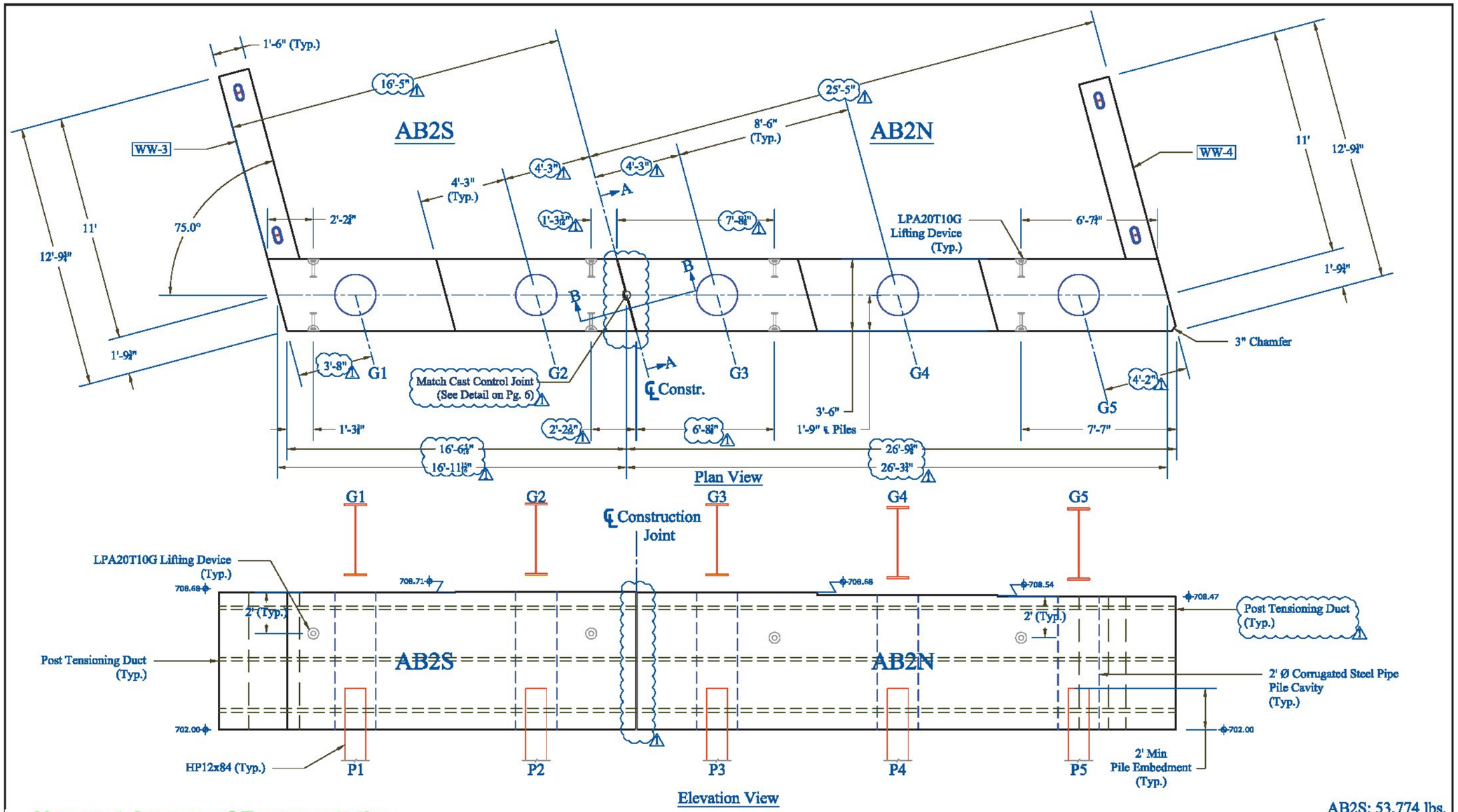

AB2S: 53,774 lbs.
AB2N: 80,126 lbs

Vermont Agency of Transportation

RECEIVED

Abutment Submittal 201215_Markup.pdf

CK'D BY CLB OK'D BY DRP

January 13, 2015

RESUBMIT NO Approved

BY C. CARLSON DATE 01/15/15

PRECAST CONCRETE ABUTMENT SHOP DRAWINGS (SDI JOB #15163)

SUPERVISOR: M. WHEELER
DETAILER: I. ADAMS
CHECKER: E. Barendse
ENGINEER:

PROJECT NAME: Stowe BRF 0235 (II)
PROJECT #: 0235 (II)
LOCATION: Stowe, VT

INSTALLER:
CCS Construction
138 Munson Ave
Morrisville, VT 05661
Ph: 802-888-7701

FABRICATOR:
193 INDUSTRIAL AVE.
WILLISTON, VT 05495
Ph: (802) 658-0201

SD Ireland Precast Division

01/08/15 | Abutment 2 | 3 of 11

Vermont Agency of Transportation

RECEIVED

Abutment Submittal 201215_Markup.pdf

CK'D BY CLB OK'D BY DRP

January 13, 2015

RESUBMIT NO Approved

BY C. CARLSON DATE 01/15/15

WW2: Plan View

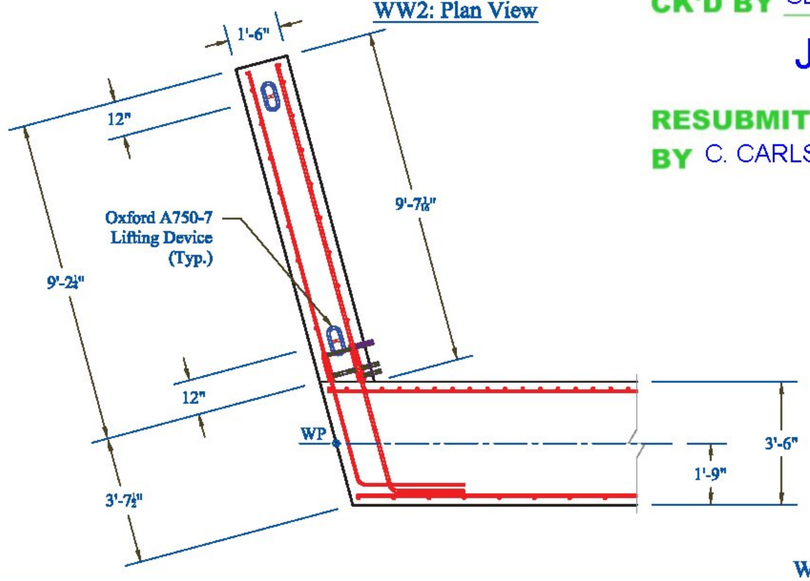

Weight: 9,450 lbs.

WW1: Plan View

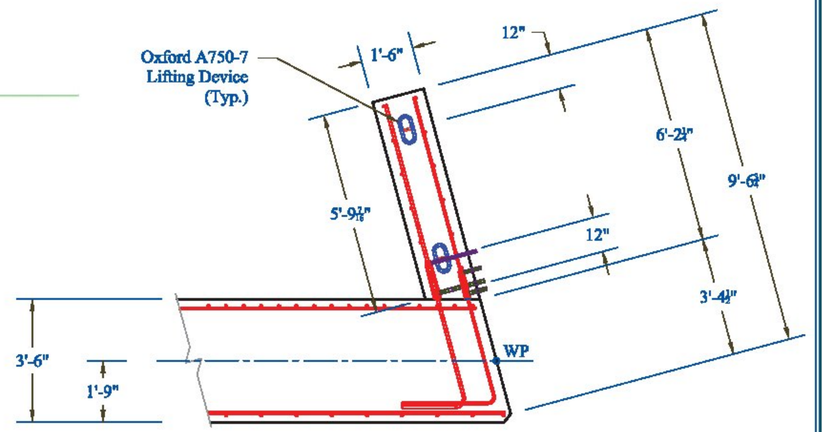

Weight: 9,400 lbs.

WW2: Elevation View

(Reference Dimension Fabricators Sheet F for Bar Size, Type, and Schedule) ⚠1

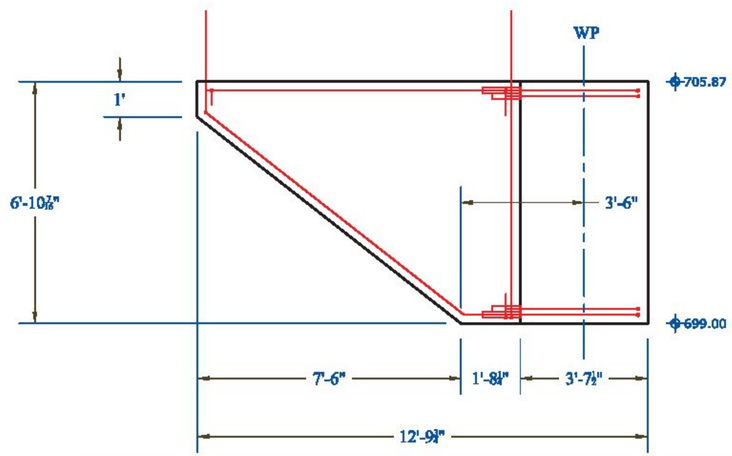

WW1: Elevation View

(Reference Dimension Fabricators Sheet F for Bar Size, Type, and Schedule) ⚠1

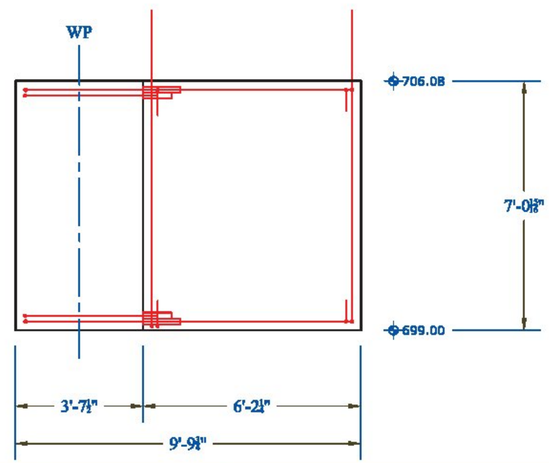

CONTRACTORS VTSPEC:

⚠1 - Rev. 1 - 01/ 08 /15 - Changes per VTrans Review

PRECAST CONCRETE ABUTMENT SHOP DRAWINGS (SDI JOB #15163)

SUPERVISOR: M. WHEELER
DETAILER: I. ADAMS
CHECKER: E. Barendse
ENGINEER:

PROJECT NAME: Stowe BRF 0235 (II)
PROJECT #: 0235 (II)
LOCATION: Stowe, VT

INSTALLER:
CCS Construction
138 Munson Ave
Morrisville, VT 05661
PH: 802-888-7701

FABRICATOR:
193 INDUSTRIAL AVE.
WILLISTON, VT 05495
Ph: (802) 658-0201

SD Ireland Precast Division

01/08/15 | Wingwalls 1 & 2 | 4 of 11

Vermont Agency of Transportation

RECEIVED

Abutment/Submittal 20151215_Markup.pdf

CK'D BY CLB OK'D BY DRP

January 13, 2015

RESUBMIT NO **Approved**

BY C. CARLSON DATE 01/15/15

WW3: Plan View

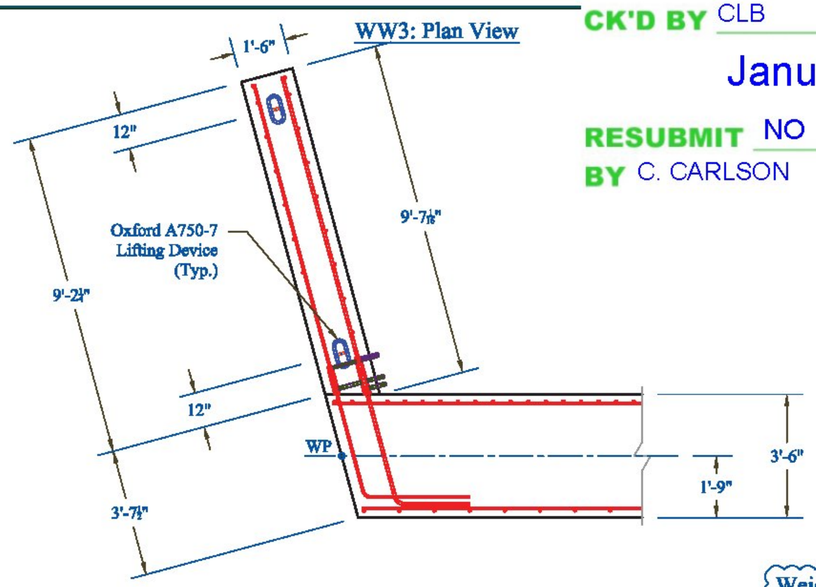

Weight: 9,160 lbs.

WW4: Plan View

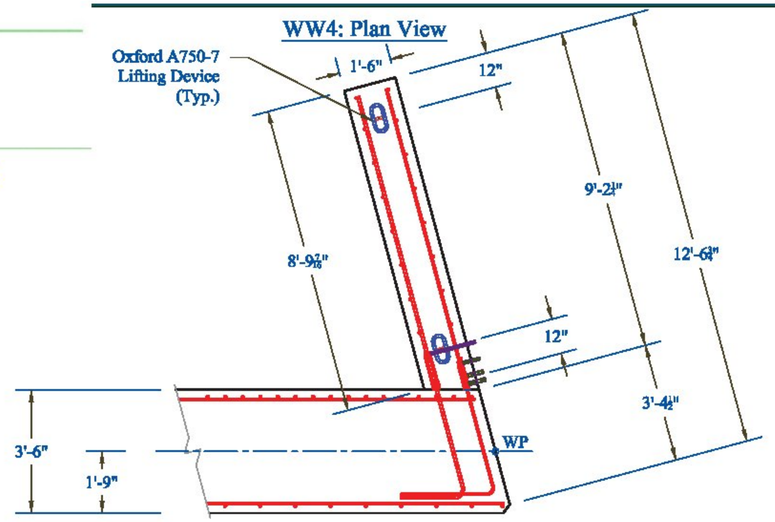

Weight: 8,800 lbs.

WW3: Elevation View

(Reference Dimension Fabricators Sheet J for Bar Size, Type, and Schedule)

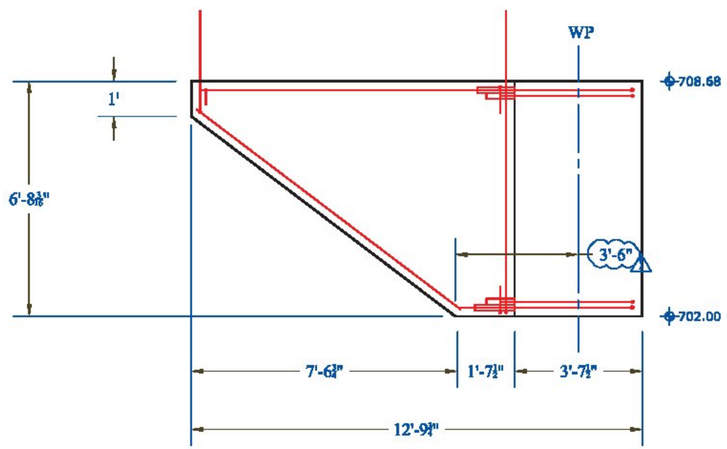

WW4: Elevation View

(Reference Dimension Fabricators Sheet J for Bar Size, Type, and Schedule)

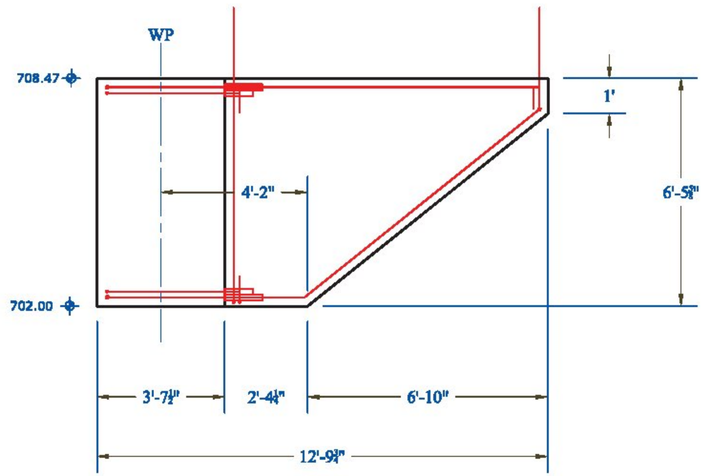

CONTRACTORS VTSPEC:

⚠- Rev. 1 - 01/ 08 /15 - Changes per VTrans Review

PRECAST CONCRETE ABUTMENT SHOP DRAWINGS (SDI JOB #5163)

SUPERVISOR: M. WHEELER
DETAILER: I. ADAMS
CHECKER: E. Barendse
ENGINEER:

PROJECT NAME: Stowe BRF 0235 (II)
PROJECT #: 0235 (II)
LOCATION: Stowe, VT

INSTALLER:
CCS Construction
138 Munson Ave
Morrisville, VT 05661
PH: 802-888-7701

FABRICATOR:
193 INDUSTRIAL AVE.
WILLISTON, VT 05495
Ph: (802) 658-0201

SD Ireland Precast Division

01/08/15 | Wingwalls 3 & 4 | 5 of 11

Match Cast Joint Detail

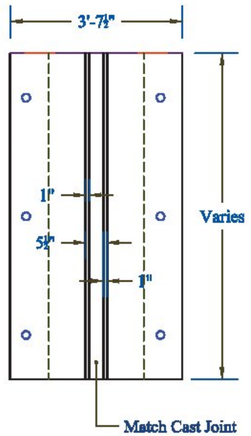

Abutment Face: A-A (Pgs 2 & 3)

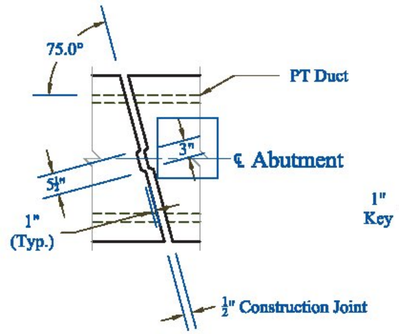

Plan View

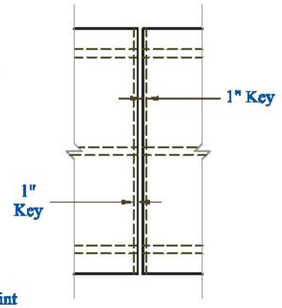

Section View: B-B (Pgs 2 & 3)

Abutment 1 & 2: Typical Section

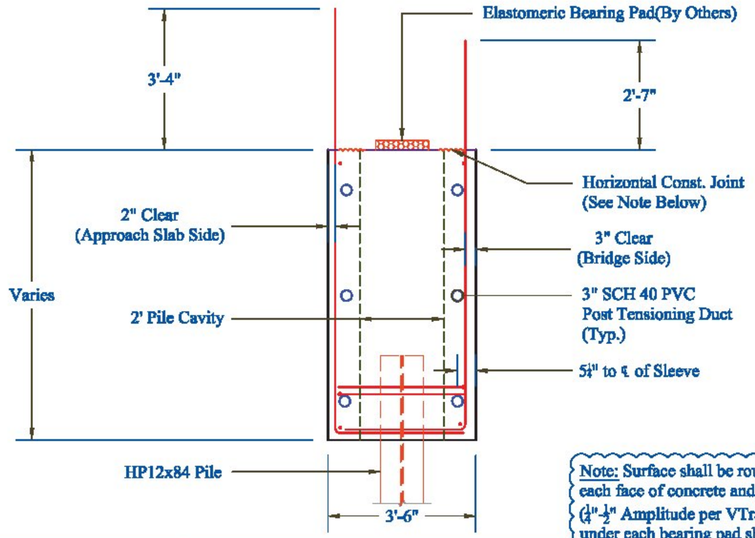

Note: Surface shall be roughened to within 3" of each face of concrete and 3" from H-pile sleeve (¼"-½" Amplitude per VTrans std 501.00). Surface under each bearing pad shall be smooth.

Wingwall Grout Sleeve Detail

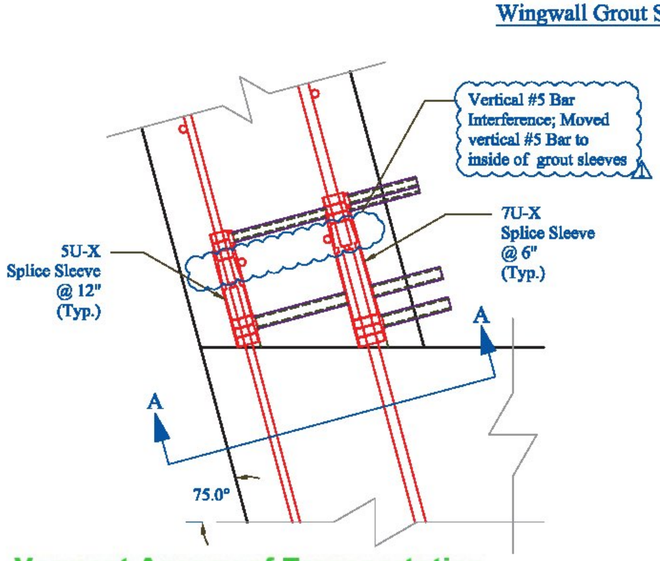

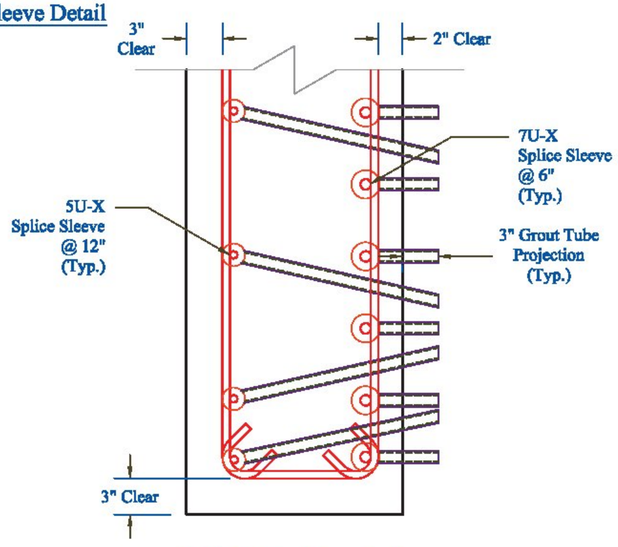

End Section View: A-A

Wingwall 1 - 4: Typical Section

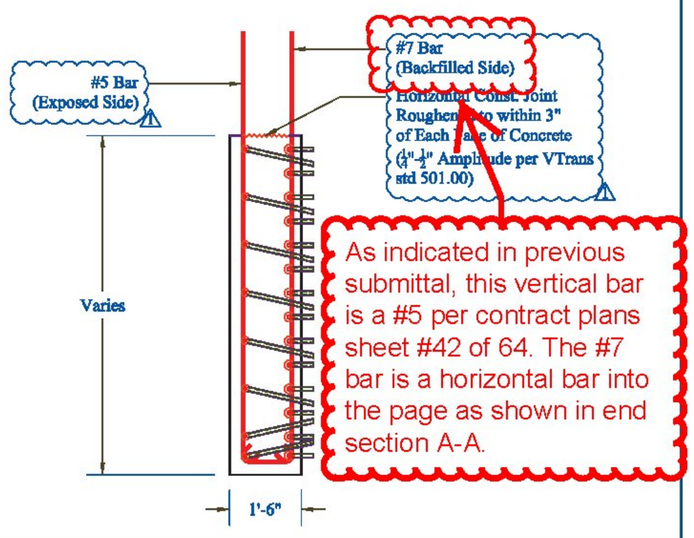

As indicated in previous submittal, this vertical bar is a #5 per contract plans sheet #42 of 64. The #7 bar is a horizontal bar into the page as shown in end section A-A.

Vermont Agency of Transportation

RECEIVED

Abutment Submittal 20151215_Markup.pdf

CK'D BY CLB OK'D BY DRP

January 13, 2015

RESUBMIT NO Approved AsNoted

BY C. CARLSON DATE 01/15/15

Review

PRECAST CONCRETE ABUTMENT SHOP DRAWINGS (SDI JOB #15163)				
SUPERVISOR: M. WHEELER DETAILER: I. ADAMS CHECKER: E. Barendse ENGINEER:	PROJECT NAME: Stowe BRF 0235 (II) PROJECT #: 0235 (II) LOCATION: Stowe, VT	INSTALLER: CCS Construction 138 Munson Ave Morrisville, VT 05661 PH: 802-888-7701	FABRICATOR: 193 INDUSTRIAL AVE. WILLISTON, VT 05495 Ph: (802) 658-0201 SD Ireland Precast Division	
		01/08/15	Wing Wall & Abutment Details	6 of 11

Retaining Wall Elevation

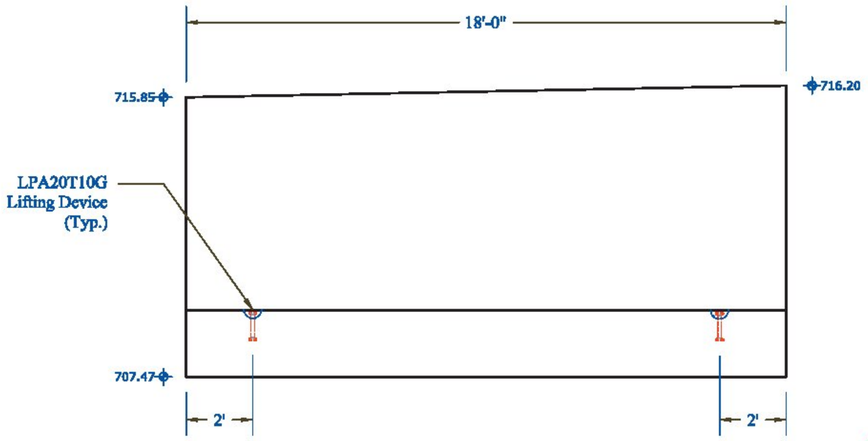

Retaining Wall Typical Section

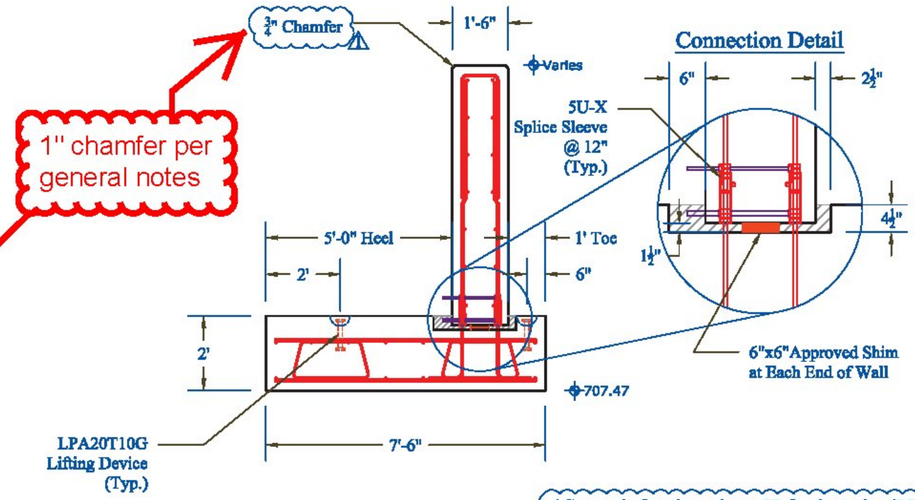

See reinforcing sheet K for bar size/I.D.

Retaining Wall Stem

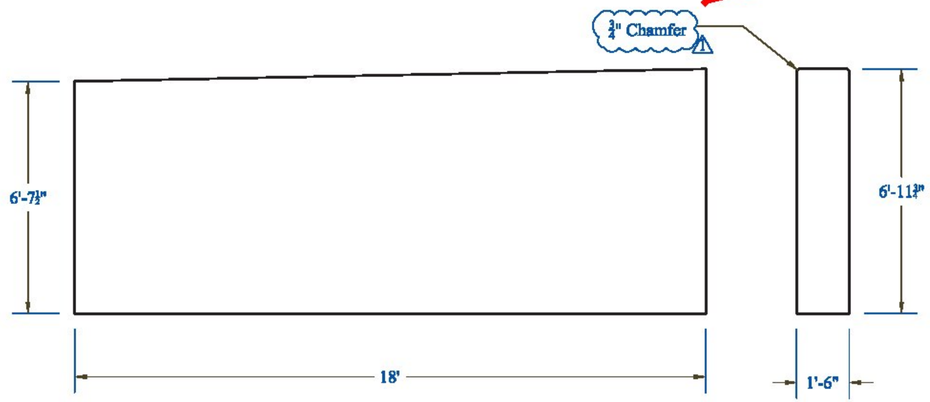

Retaining Wall Footing

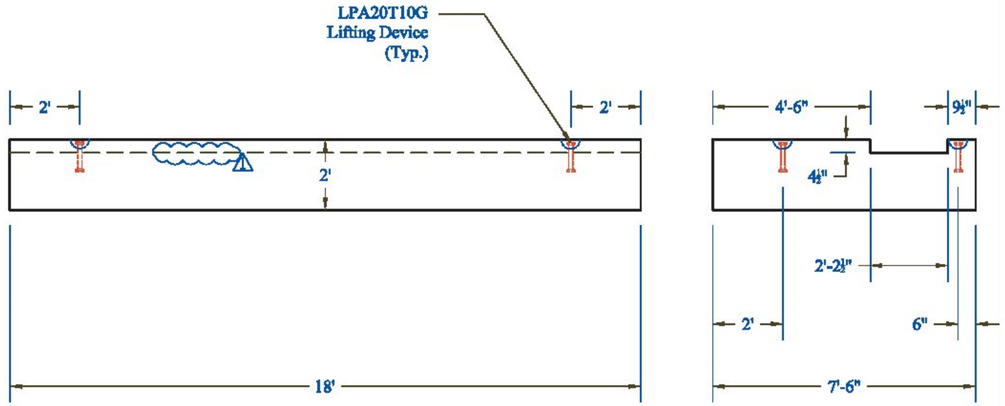

Vermont Agency of Transportation

RECEIVED

Abutment Submittal 20121215_Markup.pdf

CK'D BY CLB OK'D BY DRP

January 13, 2015

RESUBMIT NO Approved AsNoted

BY C. CARLSON DATE 01/15/15

Review

PRECAST CONCRETE ABUTMENT SHOP DRAWINGS (SDI JOB #15163)				
SUPERVISOR: M. WHEELER DETAILER: I. ADAMS CHECKER: E. Barandse ENGINEER:	PROJECT NAME: Stowe BRF 0235 (II) PROJECT #: 0235 (II) LOCATION: Stowe, VT	INSTALLER: CCS Construction, 136 Munson Ave, Morrisville, VT 05661, PH: 802-888-7701	FABRICATOR: 193 INDUSTRIAL AVE. WILLISTON, VT 05495 Ph: (802) 658-0201 SD Ireland Precast Division	
		01/08/15	Retaining Wall Details	7 of 11

Tension Duct Bearing Plate

* See post tensioning note 1 on pg 1

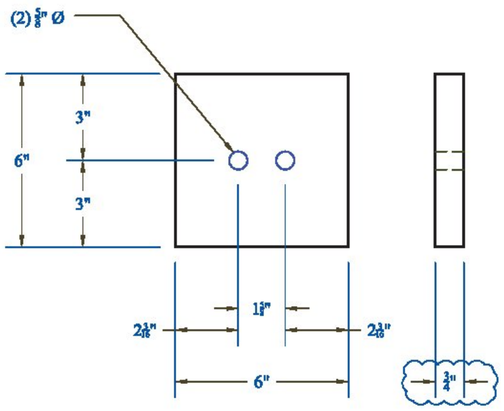

Reinforcement Detail at Tensioning Blockouts

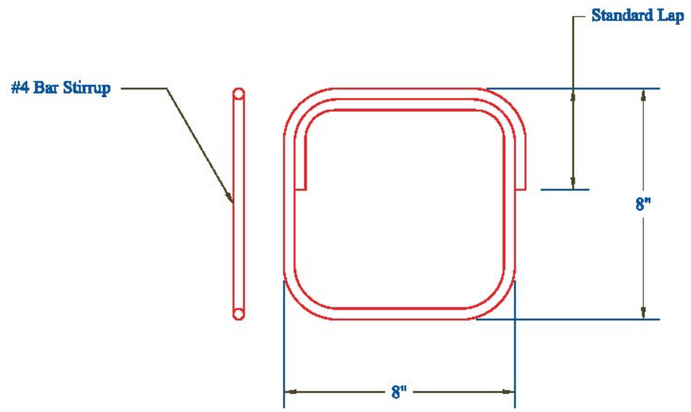

0.5" Barrel Chuck

* See post tensioning note 1 on pg 1

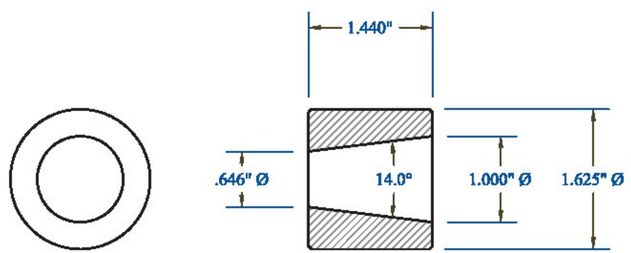

0.5" 2-Part Wedge

* See post tensioning note 1 on pg 1

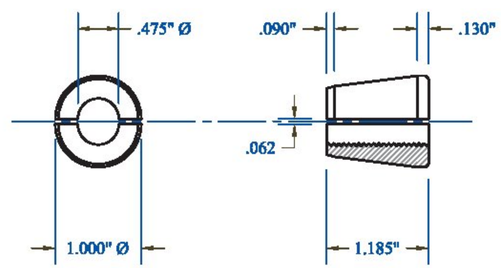

Vermont Agency of Transportation

RECEIVED

Abutment Submittal 20121215_Markup.pdf

CK'D BY CLB OK'D BY DRP

January 13, 2015

RESUBMIT NO Approved

BY C. CARLSON DATE 01/15/15

w

PRECAST CONCRETE ABUTMENT SHOP DRAWINGS (SDI JOB #15163)				
SUPERVISOR: M. WHEELER DETAILER: I. ADAMS CHECKER: E. Barendse ENGINEER:	PROJECT NAME: Stowe BRF 0235 (II) PROJECT #: 0235 (II) LOCATION: Stowe, VT	INSTALLER: CCS Construction 138 Munson Ave Morrisville, VT 05661 PH: 802-888-7701	FABRICATOR: 193 INDUSTRIAL AVE. WILLISTON, VT 05495 Ph: (802) 658-0201	SD Ireland Precast Division
		01/08/15	Post Tensioning	8 of 11

Tensioning Blockout Plan

* See post tensioning notes 1 & 6 on pg 1

Vermont Agency of Transportation

RECEIVED

Abutment Submittal 20141215_Markup.pdf

CK'D BY CLB OK'D BY DRP

January 13, 2015

RESUBMIT NO Approved

BY C. CARLSON DATE 01/15/15

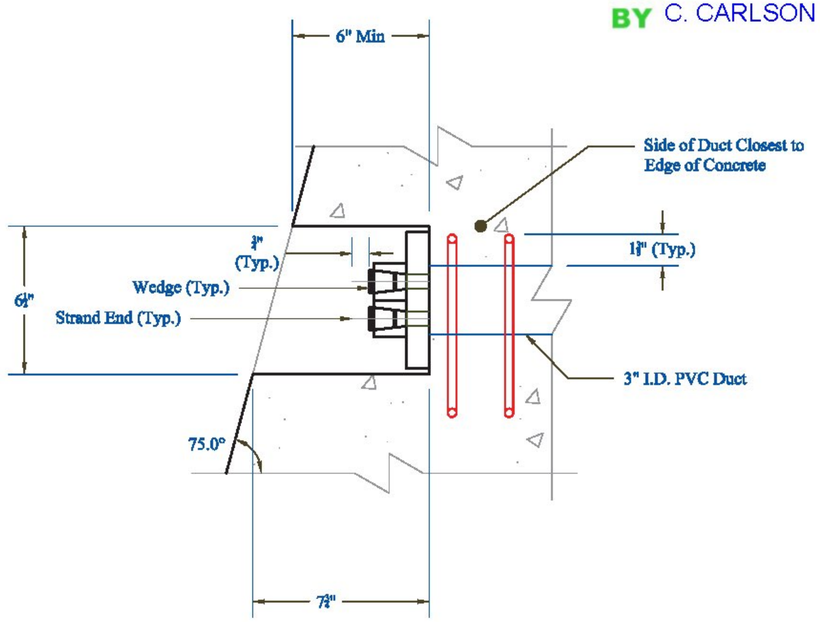

Tensioning Blockout Section

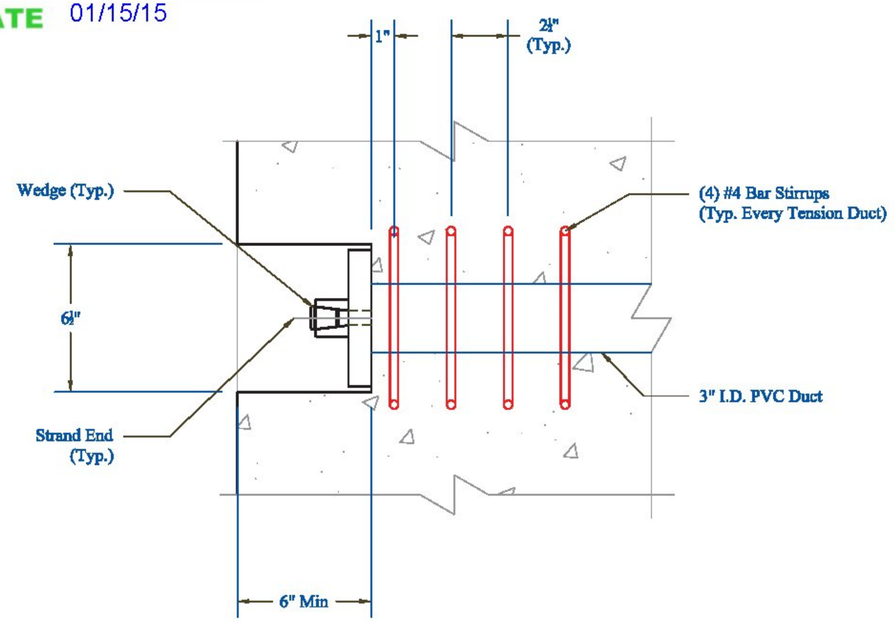

CONTRACTORS VISPE:	⚠- Rev. 1 - 01/ 08 /15 - Changes per VTrans Review	PRECAST CONCRETE ABUTMENT SHOP DRAWINGS (SDI JOB #15163)		INSTALLER: CCS Construction 138 Munson Ave Morrisville, VT 05661 PH: 802-888-7701	FABRICATOR: 193 INDUSTRIAL AVE. WILLISTON, VT 05495 Ph: (802) 658-0201 SD Ireland Precast Division
		SUPERVISOR: M. WHEELER DETAILER: I. ADAMS CHECKER: E. Barendse ENGINEER:	PROJECT NAME: Stowe BRF 0235 (II) PROJECT #: 0235 (II) LOCATION: Stowe, VT	01/08/15	Post Tensioning 9 of 11

End Bar Detail: Abutment 1

(Reference Dimension Fabricators Drawing C
for Bar Size, Type, and Schedule)

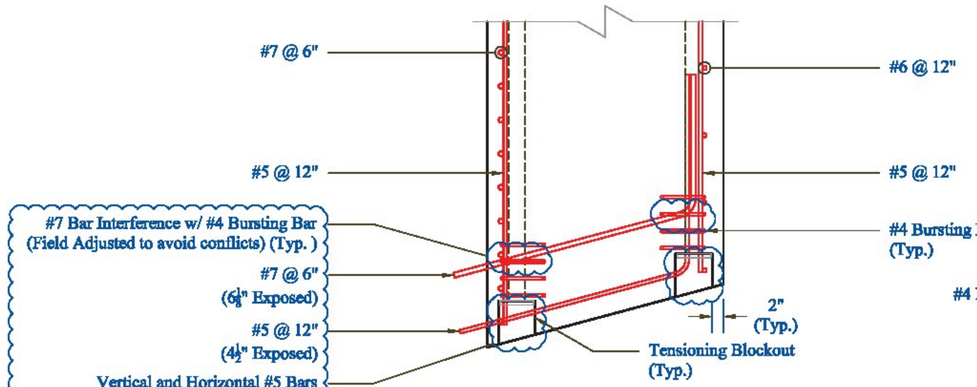

AB1N: End Plan View

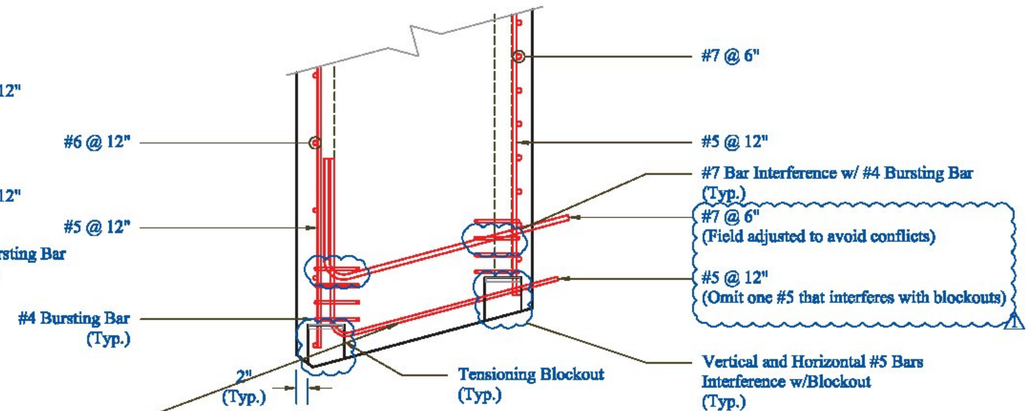

AB1S: End Plan View

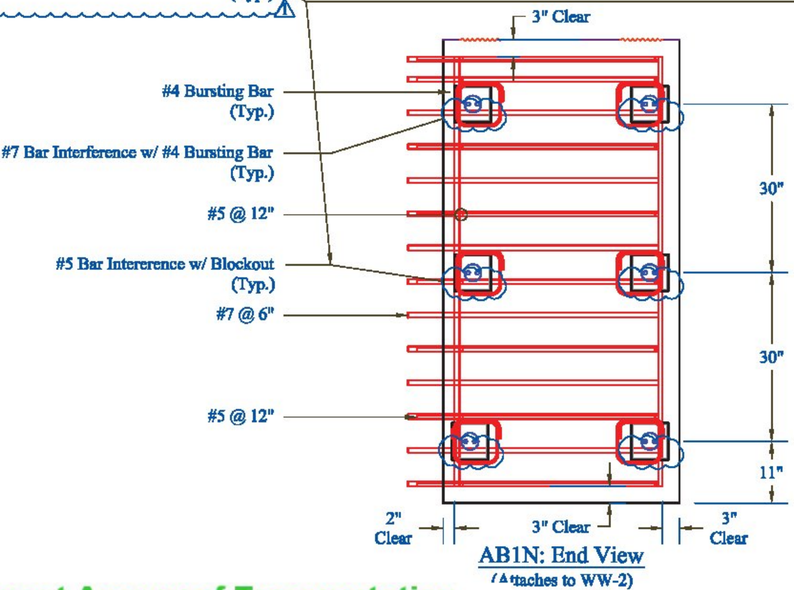

AB1N: End View
(Attaches to WW-2)

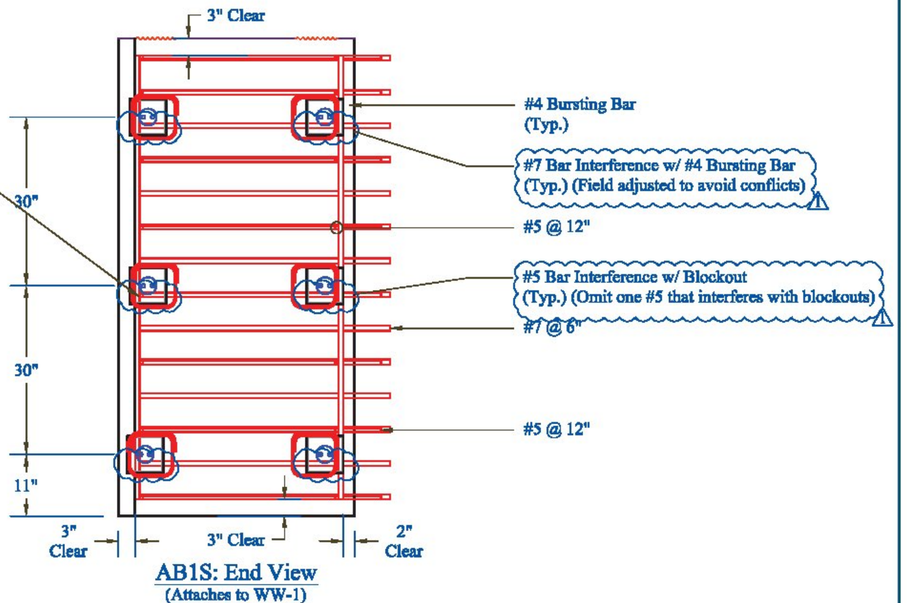

AB1S: End View
(Attaches to WW-1)

Vermont Agency of Transportation

RECEIVED

Abutment Submittal 201215_Markup.pdf

CK'D BY CLB OK'D BY DRP

January 13, 2015

RESUBMIT NO Approved

BY C. CARLSON DATE 01/15/15

:W

PRECAST CONCRETE ABUTMENT SHOP DRAWINGS (SDI JOB #15163)				
SUPERVISOR: M. WHEELER DETAILER: I. ADAMS CHECKER: E. Barendse ENGINEER:	PROJECT NAME: Stowe BRF 0235 (II) PROJECT #: 0235 (II) LOCATION: Stowe, VT	INSTALLER: CCS Construction 138 Munson Ave Morrisville, VT 05661 PH: 802-888-7701	FABRICATOR: 193 INDUSTRIAL AVE. WILLISTON, VT 05495 Ph: (802) 658-0201 SD Ireland Precast Division	
		01/08/15	End Bar Detail Abmt.1	10 of 11

End Bar Detail: Abutment 2

(Reference Dimension Fabricators Drawing D
for Bar Size, Type, and Schedule)

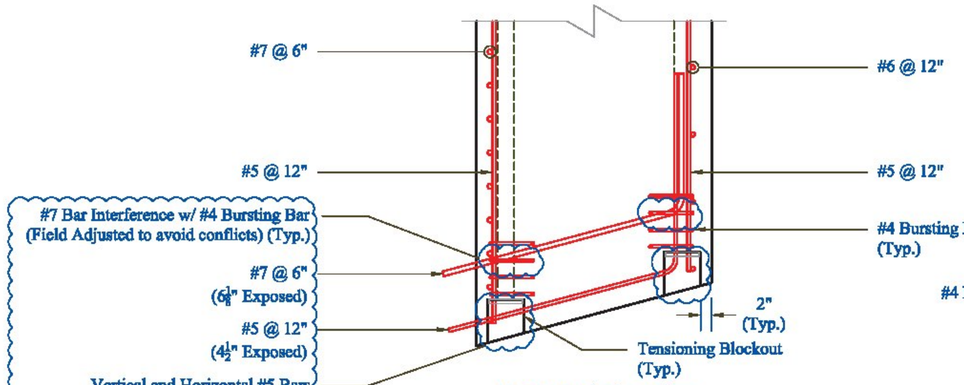

AB2S: End Plan View

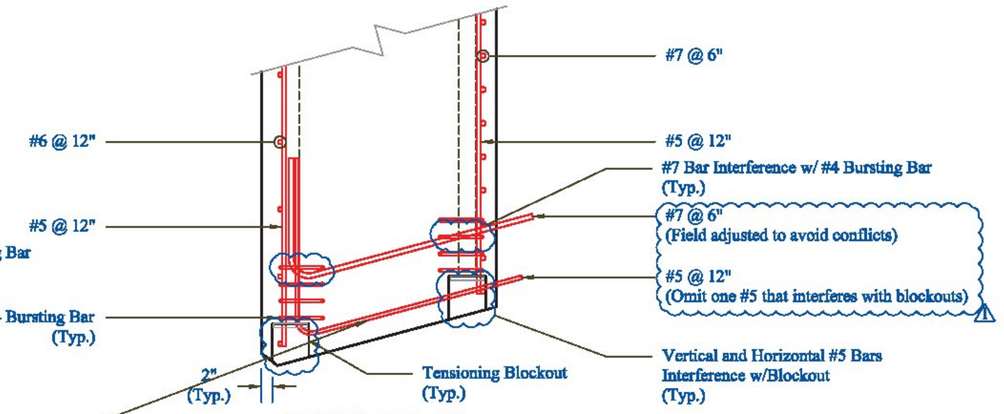

AB2N: End Plan View

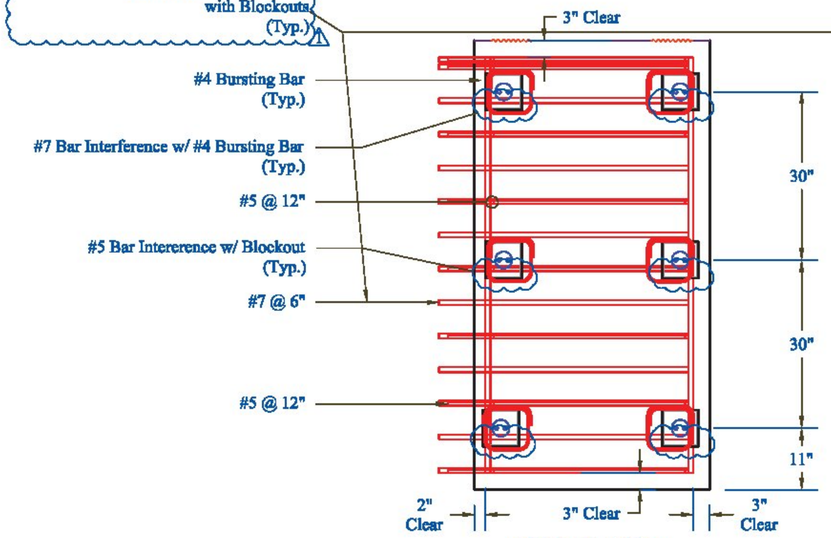

AB2S: End View
(Attaches to WW-3)

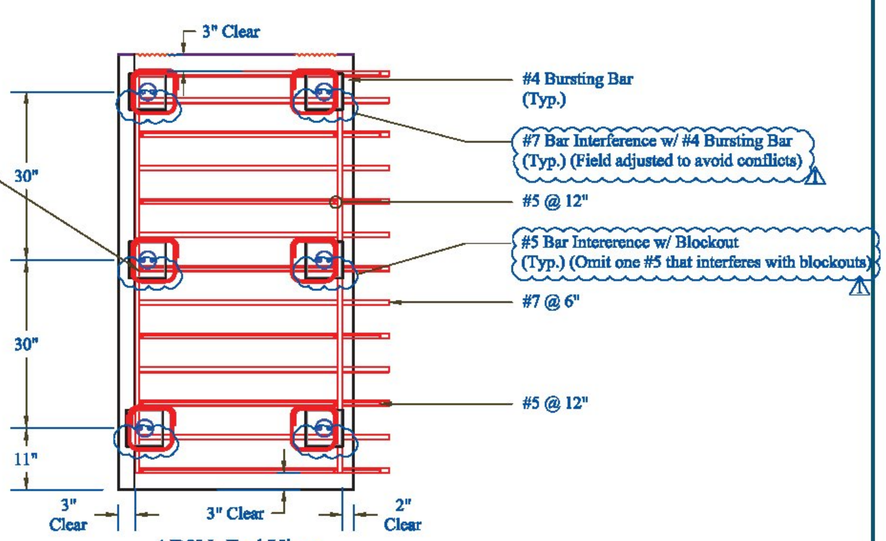

AB2N: End View
(Attaches to WW-4)

Vermont Agency of Transportation

RECEIVED

Abutment Submittal 2011216_Markup.pdf

CK'D BY CLB OK'D BY DRP

January 13, 2015

RESUBMIT NO Approved

BY C. CARLSON DATE 01/15/15

PRECAST CONCRETE ABUTMENT SHOP DRAWINGS (SDI JOB #15163)		INSTALLER: CCS Construction 138 Munson Ave Morrisville, VT 05661 Ph: 802-888-7701	FABRICATOR: 193 INDUSTRIAL AVE. WILLISTON, VT 05495 Ph: (802) 658-0201 SD Ireland Precast Division	
SUPERVISOR: M. WHEELER	PROJECT NAME: Stowe BRF 0235 (II)			
DETAILER: I. ADAMS	PROJECT #: 0235 (II)			
CHECKER: E. Borendse	LOCATION: Stowe, VT			
ENGINEER:		01/08/15	End Bar Detail Abmt.2	11 of 11

The vertical bars coming out of the abutments will either be spaced to avoid interference with the girders or cut where they interfere.

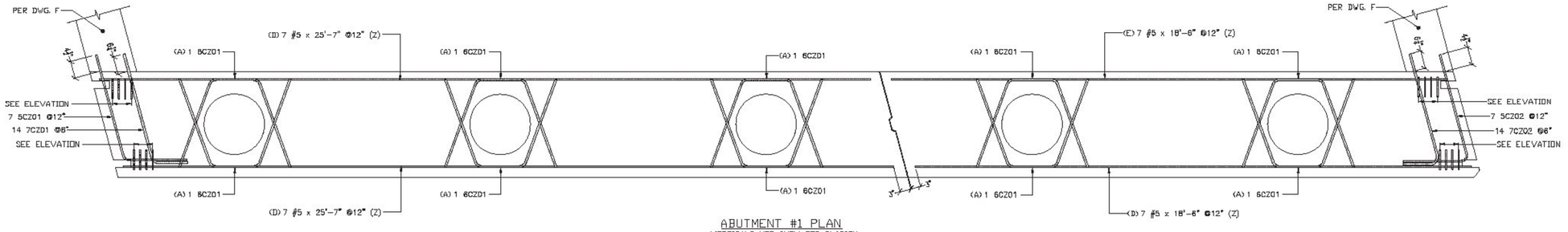

ABUTMENT #1 PLAN
VERTICALS NOT SHOW FOR CLARITY

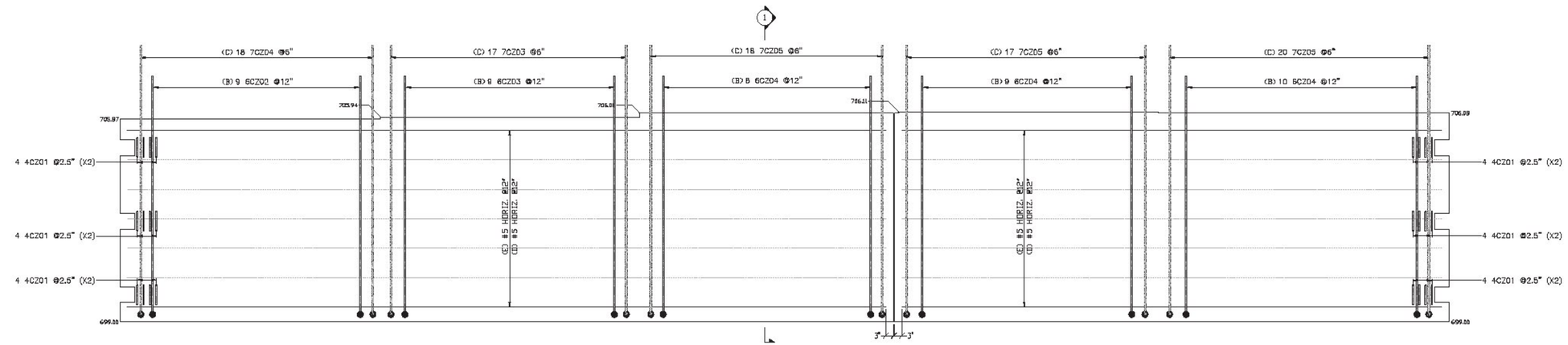

ABUTMENT #1 ELEVATION
PILES, PILE CAVITIES AND POST TENSIONING DUCKS NOT SHOWN FOR CLARITY

⚠ (2) 5'-0" LONG SAMPLE BARS WILL BE PROVIDED FOR EACH BAR SIZE

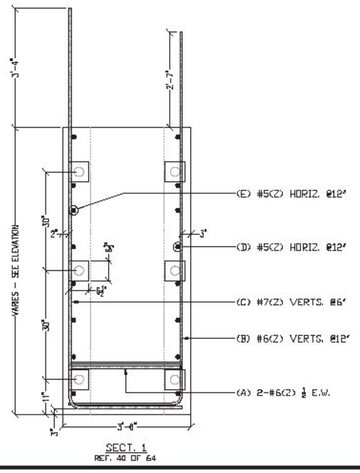

Release Number: 003

BAR LIST

Bar Mark	Qty	Size	Total Length	Type	'A'	'B'	'C'	'D'	'E'	'F'	'G'	'H'	'J'	'K'	'O'	'R'
	14	#5	25'-7"			25'-7"										
	14	#5	18'-6"			18'-6"										
4CZ01	48	#4	4'-8"	L9	0'-4 ½"	0'-8"	0'-8"	0'-8"	0'-8"	0'-8"	0'-4 ½"					
5CZ01	7	#5	6'-11 ½"	3		3'-7 ½"	⚠ 3'-4"					3'-2 ½"		0'-10 ¼"	4'-5 ¾"	
5CZ02	7	#5	6'-11 ½"	21			3'-7 ½"	⚠ 3'-4"				3'-2 ½"		0'-10 ¼"		
6CZ01	10	#6	7'-9 ½"	3			3'-1 ¼"	1'-7"	3'-1 ¼"			2'-11"		1'-0 ¾"	3'-9 ¾"	
6CZ02	9	#6	12'-3"	17		3'-1"	9'-2"									
6CZ03	9	#6	12'-4"	17		3'-1"	9'-3"									
6CZ04	27	#6	12'-6"	17		3'-1"	9'-5"									
7CZ01	14	#7	4'-11 ¼"	3		3'-9 ¼"	1'-2"					1'-1 ½"		0'-3 ½"	4'-0 ¾"	
7CZ02	14	#7	4'-11 ¾"	21			3'-9"	1'-2 ¾"				1'-2 ½"		0'-2 ¾"		
7CZ03	17	#7	13'-1"	17		3'-1"	10'-0"									
7CZ04	18	#7	12'-11"	17		3'-1"	9'-10"									
7CZ05	55	#7	13'-3"	17		3'-1"	10'-2"									

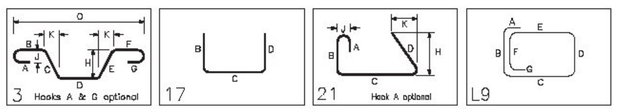

ALL DUAL COATED REINF. DENOTED (Z)

FOR APPROVAL

ELEVATIONS & DIMENSIONS SHOWN ON THIS DWG. ARE FOR REINF. DETAILING PURPOSES ONLY AND ARE NOT INTENDED FOR CONSTRUCTION.

REINF. BARS ASTM A615 GRADE 60 DUAL COATED

VERIFICATION OF UNCLEAR INFORMATION MAY BE REQUESTED ON THIS DRAWING. SHOULD VERIFICATION BE LEFT UN-ADDRESSED IT WILL REMAIN AS SHOWN AND ASSUME TO BE CORRECT.

LEGEND:
CONT.-CONTINUOUS
TRANS.-TRANSVERSE
DWLS.-DOWELS
VERTS.-VERTICAL
HORIZ.-HORIZONTAL
T&B -TOP & BOTTOM
I.F.-INNER FACE
O.F.-OUTER FACE
E.E.-EACH END
E.F.-EACH FACE
F.F.-FRONT FACE
R.F.-REAR FACE
E.W.-EACH WAY
O.C.-ON CENTER
L.W.-LONG WAY
S.W.-SHORT WAY

	DATE	REV.#	SENT FOR
6			
5			
4			
3	01-12-15	⚠	REVISE/ENG. COM/FOR APPROVAL
2	12-05-14		REVISE/SDI COM/FOR APPROVAL
1	12-03-14		FOR APPROVAL

DIMENSION — DIMENSION PRESTRESSING INC. — 2990 7TH STREET, SUITE A, P.O. 10388, RIVERSIDE, CA 92519, PH. (909) 224-1828, FAX (909) 224-1840, www.dimensionprestress.com

STRUCTURE	VTAOT STOWE BRF 0235(11)
LOCATION	WILLINGTON, VT
ARCHITECT	
ENGINEER	
CUSTOMER	SD IRELAND CONCRETE CONST. CORP.
DRAWN BY	ED
DATE	12/3/14
SPY #	9117
DRAWING CONTENTS	ABUTMENT #1 DUAL COATED REINFORCING
DRAWING #	C

Vermont Agency of Transportation
RECEIVED
CK'D BY CLB OK'D BY DRP
January 13, 2015
RESUBMIT NO Approved AsNoted
BY C. CARLSON DATE 01/15/15

The vertical bars coming out of the abutments will either be spaced to avoid interference with the girders or cut where they interfere.

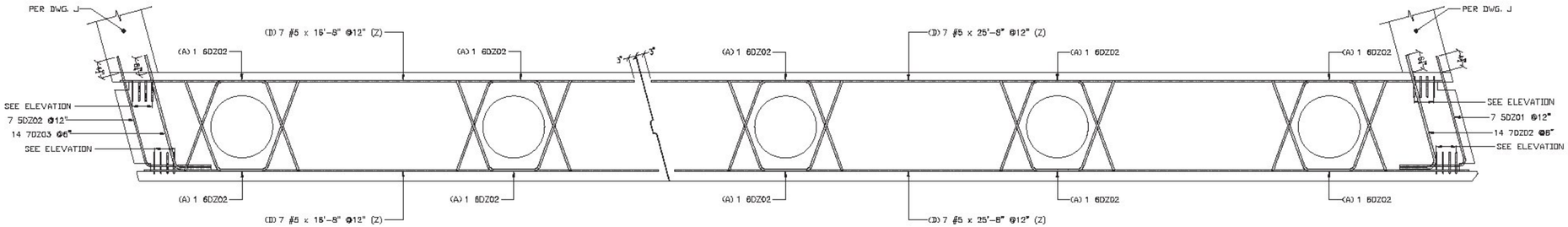

ABUTMENT #2 PLAN
VERTICALS NOT SHOW FOR CLARITY

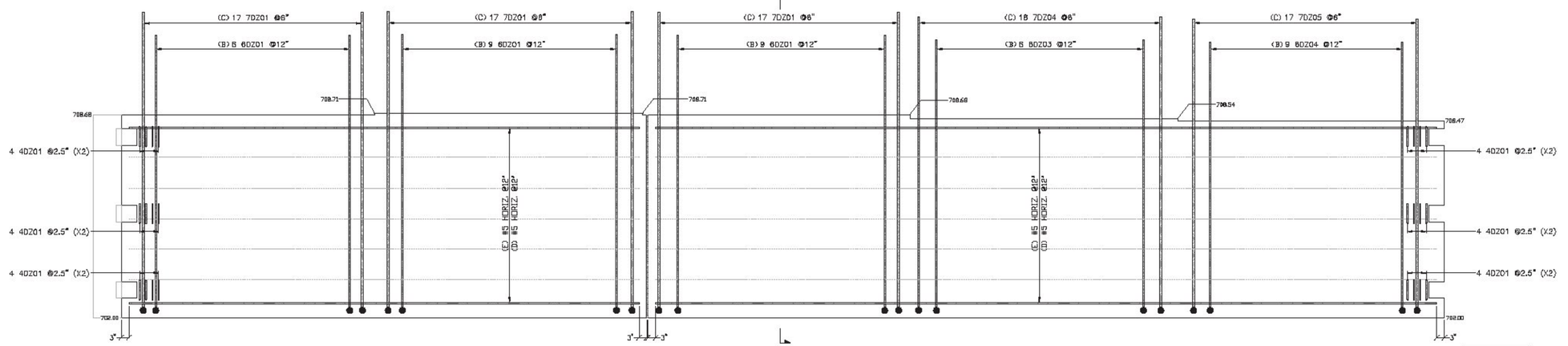

ABUTMENT #2 ELEVATION
PILES, PILE CAVITIES AND POST TENSIONING DUCKS NOT SHOWN FOR CLARITY

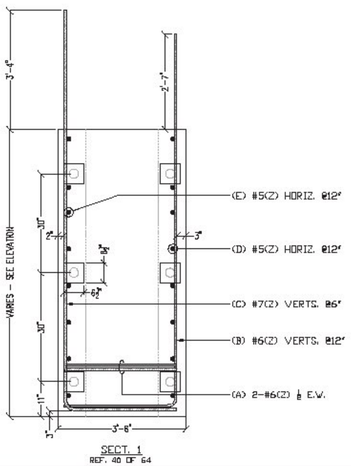

SECT. 1
REF. 40 OF 64

⚠ (2) 5'-0" LONG SAMPLE BARS WILL BE PROVIDED FOR EACH BAR SIZE

Release Number: 004 — BAR LIST

Bar Mark	Qty	Size	Total Length	Type	'A'	'B'	'C'	'D'	'E'	'F'	'G'	'H'	'J'	'K'	'O'	'R'
	14	#5	16'-8"			16'-8"										
	14	#5	25'-8"			25'-8"										
4DZ01	48	#4	4'-8"	L9	0'-4 ½"	0'-8"	0'-8"	0'-8"	0'-8"	0'-8"	0'-4 ½"					
5DZ01	7	#5	6'-11 ½"	21			3'-7 ½"	⚠ 3'-4"				3'-2 ½"		0'-10 ¼"		
5DZ02	7	#5	6'-11 ½"	3		3'-7 ½"	⚠ 3'-4"					3'-2 ½"		0'-10 ¼"	4'-5 ¾"	
6DZ01	26	#6	12'-1"	17		3'-1"	9'-0"									
6DZ02	10	#6	7'-9 ⅛"	3			3'-1 ¼"	1'-7"	3'-1 ¼"			2'-11"		1'-0 ¾"	3'-9 ¾"	
6DZ03	8	#6	11'-11"	17		3'-1"	8'-10"									
6DZ04	9	#6	11'-10"	17		3'-1"	8'-9"									
7DZ01	51	#7	12'-10"	17		3'-1"	9'-9"									
7DZ02	14	#7	4'-11 ¾"	21			3'-9"	1'-2 ¾"				1'-2 ½"		0'-2 ¾"		
7DZ03	14	#7	4'-11 ¼"	3		3'-9 ¼"	1'-2"					1'-1 ½"		0'-3 ½"	4'-0 ¾"	
7DZ04	18	#7	12'-8"	17		3'-1"	9'-7"									
7DZ05	17	#7	12'-7"	17		3'-1"	9'-6"									

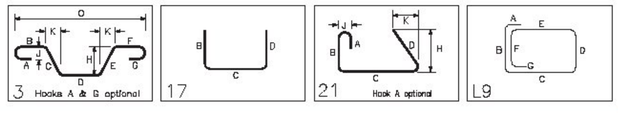

ALL DUAL COATED REINF. DENOTED (Z)

ELEVATIONS & DIMENSIONS SHOWN ON THIS DWG. ARE FOR REINF. DETAILING PURPOSES ONLY AND ARE NOT INTENDED FOR CONSTRUCTION.

REINF. BARS ASTM A615 GRADE 60 DUAL COATED

VERIFICATION OF UNCLEAR INFORMATION MAY BE REQUESTED ON THIS DRAWING. SHOULD VERIFICATION BE LEFT UN-ADDRESSED IT WILL REMAIN AS SHOWN AND ASSUME TO BE CORRECT.

LEGEND:
CONT.-CONTINUOUS
TRANS.-TRANSVERSE
DWLS.-DOWELS
VERTS.-VERTICAL
HORIZ.-HORIZONTAL
T&B -TOP & BOTTOM
I.F.-INNER FACE
O.F.-OUTER FACE
E.E.-EACH END
E.F.-EACH FACE
F.F.-FRONT FACE
R.F.-REAR FACE
E.W.-EACH WAY
O.C.-ON CENTER
L.W.-LONG WAY
S.W.-SHORT WAY

6			
5			
4			
3			
2	01-12-15	⚠	REVISED/ENG COM/FOR APPROVAL
1	12-04-14		FOR APPROVAL
	DATE	REV.#	SENT FOR

DIMENSION — DIMENSION PARTICIPATIONS INC.
2000 7TH STREET, TROY, N.Y. 12180
PH: (518) 274-1808
FAX: (518) 274-1845
www.dimensionbridgetunnel.com

STRUCTURE: VTAOT STOWE BRF 0235(11)
LOCATION:
ARCHITECT:
ENGINEER:
CUSTOMER: SD IRELAND CONCRETE CONST. CORP.
DRAWN BY: ED — DATE: 12/4/14 — SHT #: 9117
DRAWING CONTENTS: ABUTMENT #2 DUAL COATED REINFORCING
DRAWING #: D

FOR APPROVAL

Vermont Agency of Transportation
RECEIVED
CK'D BY CLB — OK'D BY DRP
January 13, 2015
RESUBMIT NO — Approved AsNoted
BY C. CARLSON — DATE 01/15/15

Release Number: BAR LIST

Bar Mark	Qty	Size	Total Length	Type	'A'	'B'	'C'	'D'	'E'	'F'	'G'	'H'	'J'	'K'	'O'	'R'
	7	#5	5'-5"			5'-5"										
	1	#5	8'-7"			8'-7"										
5FZ01	34	#5	2'-0"	T11	0'-5 ½"	1'-1"					0'-5 ½"					
5FZ02	12	#5	9'-5 ½"	21			9'-0"	0'-5 ½"				0'-4"		0'-3 ¾"		
5FZ03a	1	#5	2'-8"			2'-8"										
5FZ03b	1	#5	3'-11"			3'-11"										
5FZ03c	1	#5	5'-3"			5'-3"										
5FZ03d	1	#5	6'-6"			6'-6"										
5FZ03e	1	#5	7'-10"			7'-10"										
5FZ04	4	#5	9'-3 ½"	21			8'-10"	0'-5 ½"				0'-4"		0'-3 ¾"		
5FZ05	1	#5	10'-7"	3		9'-2"	1'-5"					0'-10 ½"		1'-1 ¼"	10'-3 ¼"	
5FZ06a	2	#5	3'-9 ½"	21			3'-4"	0'-5 ½"				0'-4"		0'-3 ¾"		
5FZ06b	2	#5	4'-5 ½"	21			4'-0"	0'-5 ½"				0'-4"		0'-3 ¾"		
5FZ06c	2	#5	5'-1 ½"	21			4'-8"	0'-5 ½"				0'-4"		0'-3 ¾"		
5FZ06d	2	#5	5'-9 ½"	21			5'-4"	0'-5 ½"				0'-4"		0'-3 ¾"		
5FZ06e	2	#5	6'-5 ½"	21			6'-0"	0'-5 ½"				0'-4"		0'-3 ¾"		
5FZ06f	2	#5	7'-1 ½"	21			6'-8"	0'-5 ½"				0'-4"		0'-3 ¾"		
5FZ06g	2	#5	7'-9 ½"	21			7'-4"	0'-5 ½"				0'-4"		0'-3 ¾"		
5FZ06h	2	#5	8'-5 ½"	21			8'-0"	0'-5 ½"				0'-4"		0'-3 ¾"		
	14	#7	5'-0"			5'-0"										
	2	#7	8'-8"			8'-8"										
7FZ01a	1	#7	2'-0"			2'-0"										
7FZ01b	1	#7	2'-7"			2'-7"										
7FZ01c	1	#7	3'-3"			3'-3"										
7FZ01d	1	#7	3'-10"			3'-10"										
7FZ01e	1	#7	4'-6"			4'-6"										
7FZ01f	1	#7	5'-2"			5'-2"										
7FZ01g	1	#7	5'-9"			5'-9"										
7FZ01h	1	#7	6'-5"			6'-5"										
7FZ01i	1	#7	7'-0"			7'-0"										
7FZ01j	1	#7	7'-8"			7'-8"										
7FZ01k	1	#7	8'-4"			8'-4"										
7FZ02	1	#7	10'-8"	3		9'-5"	1'-3"					0'-9 ¼"		0'-11 ¾"	10'-4 ¾"	

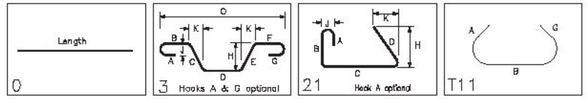

⚠ *BAR MARKS MAY CHANGE DUE TO REVISIONS

⚠ (2) 5'-0" LONG SAMPLE BARS WILL BE PROVIDED FOR EACH BAR SIZE

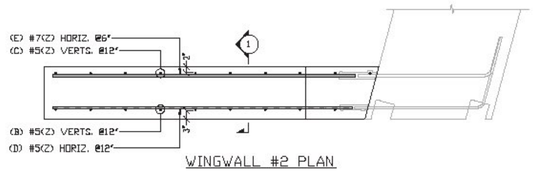

WINGWALL #2 PLAN

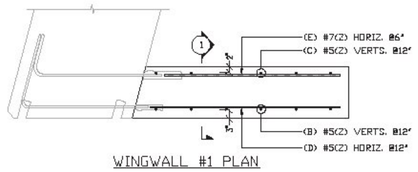

WINGWALL #1 PLAN

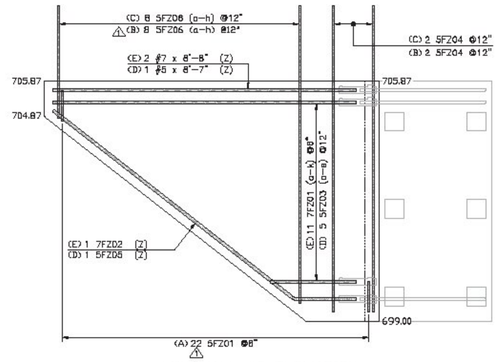

WINGWALL #2 ELEVATION

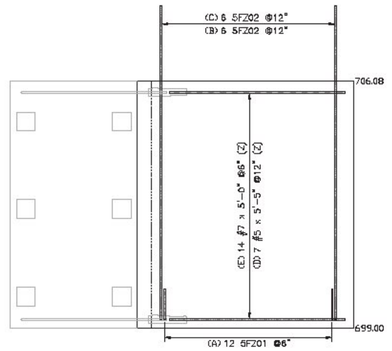

WINGWALL #1 ELEVATION

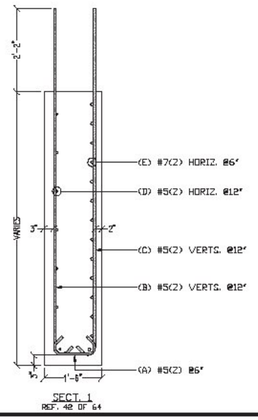

SECT. 1
REF. 42 OF 64

Vermont Agency of Transportation

RECEIVED

Abutment Submittal 2 011215_Markup.pdf

CK'D BY CLB OK'D BY DRP

January 13, 2015

RESUBMIT NO Approved

BY C. CARSLON DATE 01/15/15

FILE COPY

LEGEND:
CONT.-CONTINUOUS
TRANS.-TRANSVERSE
DWLS.-DOWELS
VERTS.-VERTICAL
HORIZ.-HORIZONTAL
T&B -TOP & BOTTOM
I.F.-INNER FACE
O.F.-OUTER FACE
E.E.-EACH END
E.F.-EACH FACE
F.F.-FRONT FACE
R.F.-REAR FACE
E.W.-EACH WAY
O.C.-ON CENTER
L.W.-LONG WAY
S.W.-SHORT WAY

ALL DUAL COATED REINF. DENOTED (Z)

ELEVATIONS & DIMENSIONS SHOWN ON THIS DWG. ARE FOR REINF. DETAILING PURPOSES ONLY AND ARE NOT INTENDED FOR CONSTRUCTION.

REINF. BARS ASTM A615 GRADE 60 DUAL COATED

VERIFICATION OF UNCLEAR INFORMATION MAY BE REQUESTED ON THIS DRAWING. SHOULD VERIFICATION BE LEFT UN-ADDRESSED IT WILL REMAIN AS SHOWN AND ASSUME TO BE CORRECT.

DATE	REV.#	SENT FOR
01-12-15	⚠	REVISED/SO1 COM/FOR APPROVAL
12-05-14		FOR APPROVAL

DIMENSION
DIMENSION FAB SOLUTIONS INC.
2559 7TH STREET
BERTH, N.Y. 12092
PH: (518) 674-1168
FAX: (518) 674-1626

STRUCTURE	VTAOT STOWE BRF 0235(11)
LOCATION	
ARCHITECT	
ENGINEER	
CUSTOMER	SD IRELAND CONCRETE CONST. CORP.
DRAWN BY: ED	DATE: 12/5/14
DRAWING CONTENTS: WINGWALLS 1 & 2 DUAL COATED REINFORCING	DWG #: 9117
	DRAWING #: F

Drawing Sheet : J — ⚠ BAR LIST

Bar Mark	Qty	Size	Total Length	Type	'A'	'B'	'C'	'D'	'E'	'F'	'G'	'H'	'J'	'K'	'O'	'R'
	2	#7	8'-8"			8'-8"										
	2	#7	8'-8"			8'-8"										
	1	#5	8'-7"			8'-7"										
	1	#5	8'-7"			8'-7"										
5JZ01	⚠A43	#5	2'-0"	T11	0'-5 ½"	1'-1"					0'-5 ½"					
5JZ02	1	#5	10'-5"	3		9'-1"	1'-4"					0'-9 ½"		1'-0 ½"	10'-1 ½"	
5JZ03	4	#5	9'-0 ½"	21			8'-7"	0'-5 ½"				0'-4"		0'-3 ½"		
5JZ04a	1	#5	2'-8"			2'-8"										
5JZ04b	1	#5	4'-0"			4'-0"										
5JZ04c	1	#5	5'-4"			5'-4"										
5JZ04d	1	#5	6'-8"			6'-8"										
5JZ04e	1	#5	8'-0"			8'-0"										
5JZ05a	2	#5	3'-6 ½"	21			3'-1"	0'-5 ½"				0'-4"		0'-3 ½"		
5JZ05b	2	#5	4'-3 ½"	21			3'-10"	0'-5 ½"				0'-4"		0'-3 ½"		
5JZ05c	2	#5	5'-0 ½"	21			4'-7"	0'-5 ½"				0'-4"		0'-3 ½"		
5JZ05d	2	#5	5'-9 ½"	21			5'-4"	0'-5 ½"				0'-4"		0'-3 ½"		
5JZ05e	2	#5	6'-6 ½"	21			6'-1"	0'-5 ½"				0'-4"		0'-3 ½"		
5JZ05f	2	#5	7'-3 ½"	21			6'-10"	0'-5 ½"				0'-4"		0'-3 ½"		
5JZ05g	2	#5	8'-0 ½"	21			7'-7"	0'-5 ½"				0'-4"		0'-3 ½"		
5JZ05h	2	#5	8'-9 ½"	21			8'-4"	0'-5 ½"				0'-4"		0'-3 ½"		
5JZ06a	1	#5	3'-2"			3'-2"										
5JZ06b	1	#5	4'-5"			4'-5"										
5JZ06c	1	#5	5'-8"			5'-8"										
5JZ06d	1	#5	6'-11"			6'-11"										
5JZ06e	1	#5	8'-2"			8'-2"										
5JZ07	1	#5	10'-6"	3		9'-7"	1'-11"					1'-2 ½"		1'-5 ½"	10'-0 ½"	
5JZ08	4	#5	8'-10 ½"	21			8'-5"	0'-5 ½"				0'-4"		0'-3 ½"		
5JZ09a	2	#5	3'-6 ½"	21			3'-1"	0'-5 ½"				0'-4"		0'-3 ½"		
5JZ09b	2	#5	4'-2 ½"	21			3'-9 ½"	0'-5 ½"				0'-4"		0'-3 ½"		
5JZ09c	2	#5	4'-11"	21			4'-5 ½"	0'-5 ½"				0'-4"		0'-3 ½"		
5JZ09d	2	#5	5'-7 ½"	21			5'-1 ½"	0'-5 ½"				0'-4"		0'-3 ½"		
5JZ09e	2	#5	6'-3 ½"	21			5'-10"	0'-5 ½"				0'-4"		0'-3 ½"		
5JZ09f	2	#5	6'-11 ½"	21			6'-6 ½"	0'-5 ½"				0'-4"		0'-3 ½"		
5JZ09g	2	#5	7'-8"	21			7'-2 ½"	0'-5 ½"				0'-4"		0'-3 ½"		
5JZ09h	2	#5	8'-4 ½"	21			7'-11"	0'-5 ½"				0'-4"		0'-3 ½"		
7JZ01	1	#7	10'-6"	3		9'-1"	1'-5"					0'-10 ½"		1'-1 ½"	10'-2 ½"	

Drawing Sheet : J — BAR LIST

Bar Mark	Qty	Size	Total Length	Type	'A'	'B'	'C'	'D'	'E'	'F'	'G'	'H'	'J'	'K'	'O'	'R'
7JZ02a	1	#7	2'-1"			2'-1"										
7JZ02b	1	#7	2'-9"			2'-9"										
7JZ02c	1	#7	3'-5"			3'-5"										
7JZ02d	1	#7	4'-1"			4'-1"										
7JZ02e	1	#7	4'-9"			4'-9"										
7JZ02f	1	#7	5'-5"			5'-5"										
7JZ02g	1	#7	6'-1"			6'-1"										
7JZ02h	1	#7	6'-9"			6'-9"										
7JZ02i	1	#7	7'-5"			7'-5"										
7JZ02j	1	#7	8'-1"			8'-1"										
7JZ03a	1	#7	2'-7"			2'-7"										
7JZ03b	1	#7	3'-2"			3'-2"										
7JZ03c	1	#7	3'-10"			3'-10"										
7JZ03d	1	#7	4'-5"			4'-5"										
7JZ03e	1	#7	5'-1"			5'-1"										
7JZ03f	1	#7	5'-8"			5'-8"										
7JZ03g	1	#7	6'-4"			6'-4"										
7JZ03h	1	#7	6'-11"			6'-11"										
7JZ03i	1	#7	7'-7"			7'-7"										
7JZ03j	1	#7	8'-3"			8'-3"										
7JZ04	1	#7	10'-7"	3		8'-7"	2'-0"					1'-3"		1'-6 ½"	10'-1 ½"	

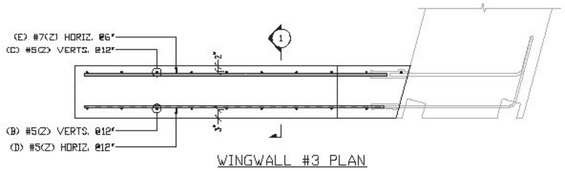

WINGWALL #3 PLAN

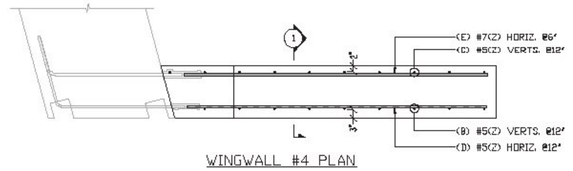

WINGWALL #4 PLAN

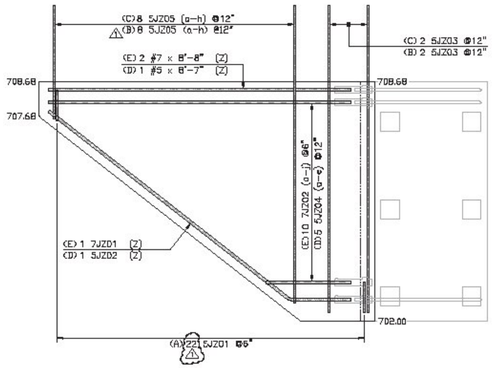

WINGWALL #3 ELEVATION

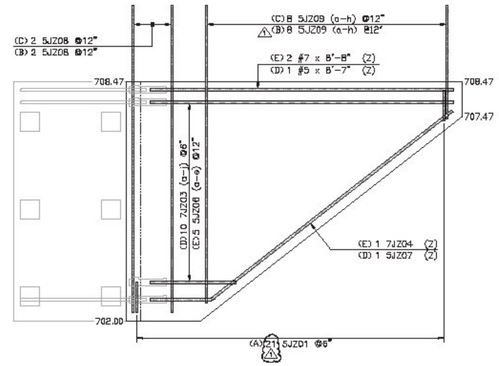

WINGWALL #4 ELEVATION

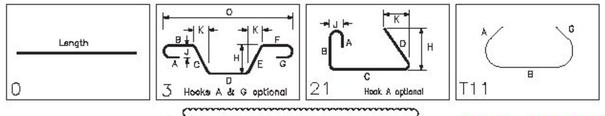

⚠ *BAR MARKS MAY CHANGE DUE TO REVISIONS

⚠ (2) 5'-0" LONG SAMPLE BARS WILL BE PROVIDED FOR EACH BAR SIZE

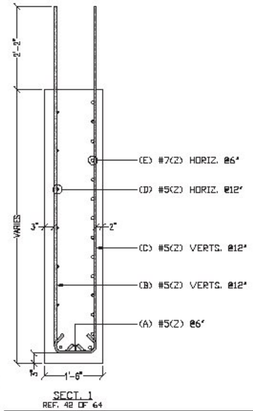

SECT. 1
REF: AD DF 64

ALL DUAL COATED REINF. DENOTED (Z)

ELEVATIONS & DIMENSIONS SHOWN ON THIS DWG. ARE FOR REINF. DETAILING PURPOSES ONLY AND ARE NOT INTENDED FOR CONSTRUCTION.

REINF. BARS ASTM A615 GRADE 60 DUAL COATED

VERIFICATION OF UNCLEAR INFORMATION MAY BE REQUESTED ON THIS DRAWING. SHOULD VERIFICATION BE LEFT UN-ADDRESSED IT WILL REMAIN AS SHOWN AND ASSUME TO BE CORRECT.

FOR APPROVAL

LEGEND
CONT.-CONTINUOUS
TRANS.-TRANSVERSE
DWLS.-DOWELS
VERTS.-VERTICAL
HORIZ.-HORIZONTAL
T&B -TOP & BOTTOM
I.F.-INNER FACE
O.F.-OUTER FACE
E.E.-EACH END
E.F.-EACH FACE
F.F.-FRONT FACE
R.F.-REAR FACE
E.W.-EACH WAY
O.C.-ON CENTER
L.W.-LONG WAY
S.W.-SHORT WAY

6			
5			
4			
3			
2	1/13/15	⚠	REVISED/SO CONV/FOR APPROVAL
1	12-05-14		FOR APPROVAL
	DATE	REV.#	SENT FOR

DIMENSION — DIMENSION FAB MONTPELIER INC.
3000 7TH STREET, BARRE, VT 05641
PH: (802) 476-4828
FX: (802) 476-4829
www.dimensionfabmontpelier.com

STRUCTURE	VTAOT STOWE BRF 0235(11)
LOCATION	
ARCHITECT	
ENGINEER	
CUSTOMER	SD IRELAND CONCRETE CONST. CORP.
DRAWN BY: ED	DATE: 12/5/14 — DF # 9117
DRAWING CONTENTS	WINGWALLS 3 & 4 DUAL COATED REINFORCING
DRAWING #	J

Vermont Agency of Transportation
RECEIVED
Abutment Submittal 201215_Markup.pdf
CK'D BY CLB OK'D BY DRP
January 13, 2015
RESUBMIT NO Approved
BY C. CARLSON DATE 01/15/15

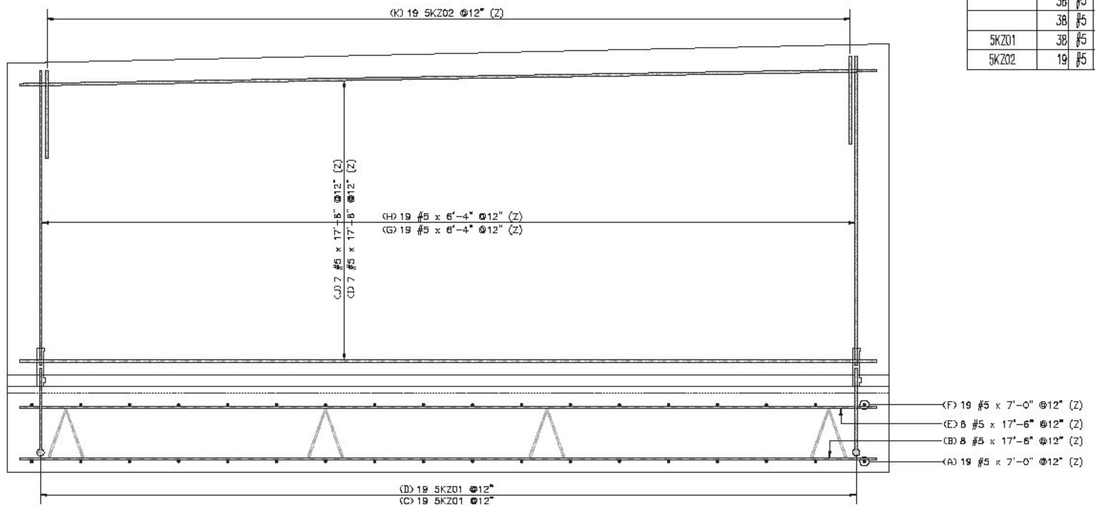

RETAINING WALL ELEVATION

Drawing Sheet : K						BAR LIST										
Bar Mark	Qty	Size	Total Length	Type	'A'	'B'	'C'	'D'	'E'	'F'	'G'	'H'	'J'	'K'	'O'	'R'
4KZ01	8	#4	6'-6 ½"	25		1'-6"	1'-0 ½"	1'-6"	1'-0 ½"	1'-6"		1'-0"		0'-6"		
	30	#5	17'-6"			17'-6"										
	38	#5	7'-0"			7'-0"										
	38	#5	6'-4"			6'-4"										
5KZ01	38	#5	2'-10"	17		0'-10"	2'-0"									
5KZ02	19	#5	5'-4"	17		2'-2"	1'-0"	2'-2"								

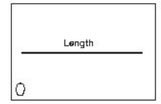

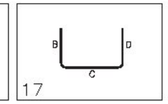

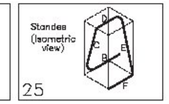

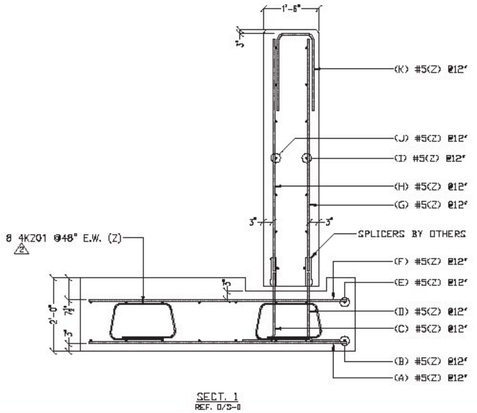

SECT. 1
REF. D/S-8

⚠ (2) 5'-0" LONG SAMPLE BARS WILL BE PROVIDED FOR EACH BAR SIZE

ALL DUAL COATED REINF. DENOTED (Z)

ELEVATIONS & DIMENSIONS SHOWN ON THIS DWG. ARE FOR REINF. DETAILING PURPOSES ONLY AND ARE NOT INTENDED FOR CONSTRUCTION.

REINF. BARS ASTM A615 GRADE 60 DUAL COATED

VERIFICATION OF UNCLEAR INFORMATION MAY BE REQUESTED ON THIS DRAWING. SHOULD VERIFICATION BE LEFT UN-ADDRESSED IT WILL REMAIN AS SHOWN AND ASSUME TO BE CORRECT.

Vermont Agency of Transportation

RECEIVED

Abutment/Submitt 201215_Markup.pdf

CK'D BY CLB OK'D BY DRP

January 13, 2015

RESUBMIT NO Approved

BY C. CARLSON DATE 01/15/15

FOR FIELD USE

LEGEND:
CONT.-CONTINUOUS
TRANS.-TRANSVERSE
DWLS.-DOWELS
VERTS.-VERTICAL
HORIZ.-HORIZONTAL
T&B -TOP & BOTTOM
I.F.-INNER FACE
O.F.-OUTER FACE
E.E.-EACH END
E.F.-EACH FACE
F.F.-FRONT FACE
R.F.-REAR FACE
E.W.-EACH WAY
O.C.-ON CENTER
L.W.-LONG WAY
S.W.-SHORT WAY

6			
5			
4	01-12-15	⚠	DR REVIEWED/FOR FIELD USE
3	12-30-14		APPROVED
2	12-8-14		REVISED/SDI COM/FOR APPROVAL
1	12-8-14		FOR APPROVAL
	DATE	REV.#	SENT FOR

DIMENSION FABRICATORS INC.
3004 7TH STREET
RIGITAL N.Y. 12302
PH: (345) 374-1436
FAX: (800) 374-4829
www.dimensionfabricators.com

STRUCTURE	VTAOT STOWE BRF 0235(11)
LOCATION	WILLISTON, VT
ASSN'SMT	
CONTRACTOR	SD IRELAND CONCRETE CONST. CORP.
DRAWN BY	ED
DATE	12/8/14
DFI #	9117
DRAWING CONTENT	RETAINING WALL DUAL COATED REINFORCING
DRAWING #	K

Vermont Agency of Transportation
RECEIVED
Abutment_WingWall_RetainingWall Submittal 1 120814_Resubmit 12.22.14.pdf
CK'D BY CLB OK'D BY DRP
December 9, 2014
RESUBMIT NO Approved AsNoted
BY C. CARLSON DATE 12/22/14

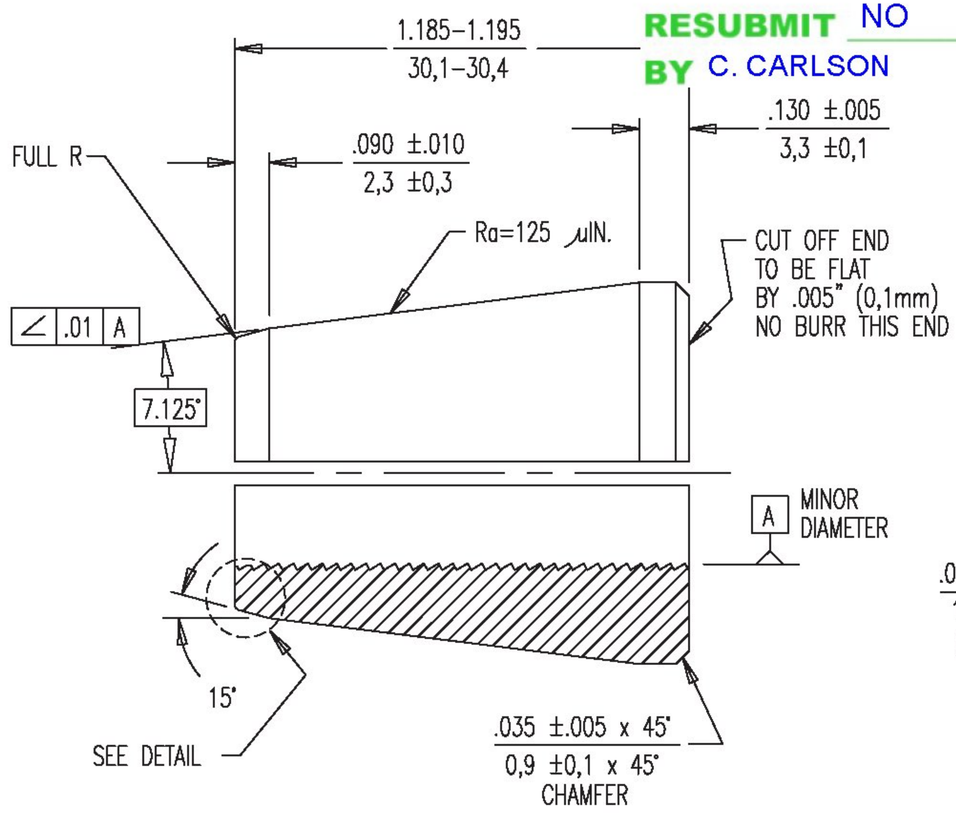

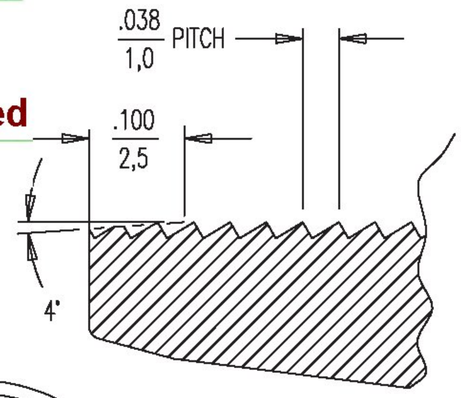

DETAIL
SCALE 5:1

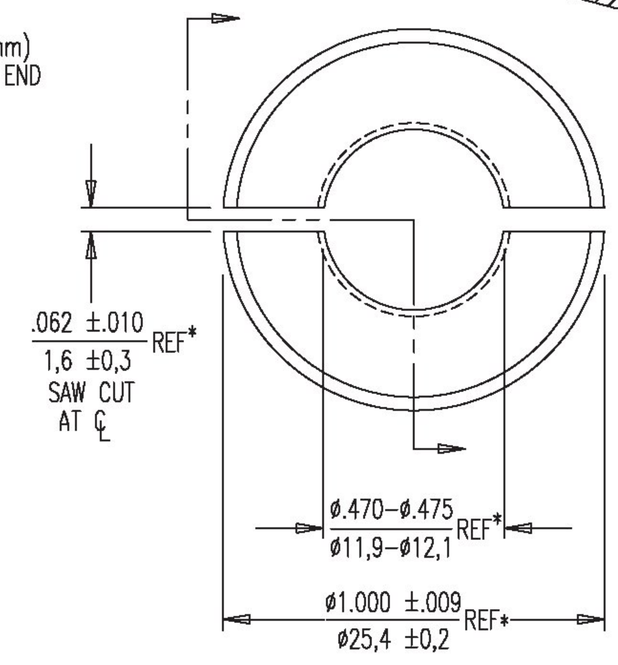

* ON UNCUT WEDGE.

NOTES:
1. INTERPRET THIS DRAWING PER ASME Y 14.5M–1994.
2. MAKE SURE THAT THE BUTRESS THREAD IS ORIENTED IN THE DIRECTION SHOWN ON THIS DRAWING.

(5)

Galvanized

PART NO.	DESCRIPTION
303525	UNCOATED
303526	ZINC PLATED

DYWIDAG POST–TENSIONING SYSTEMS

0.5" 2–PART WEDGE, 1.2" LONG

DATE: 10–21–94 | DWG: G. MALECKI | CHK: C.S. | APP: K.S.

This drawing, the pertinent enclossures, descriptions, calculations etc. and their contents are the property of DYWIDAG SYSTEMS INTERNATIONAL, USA, INC. They are not allowed to be duplicated with-out our permission. They are also not to be shown or explained for any reason to a third party other than for reasons expressly intended by the original receiver. They have to be returned on request.

DIMENSIONS: INCH/mm
mm FOR REFERENCE ONLY

TOLERANCES: ±.020 UNLESS NOTED

MATERIAL: 1" ROUND 12L14

Q.A.

WEIGHT .134 LBS.

SCALE 2:1 5:1

QUALITY PLAN NUMBER: QS00000500S

REV.	DATE	NAME	
1	06–03–96	C.S.	
2	06–28–96	C.S.	
3	09–29–97	A.W.	PB–105
4	01–05–98	A.W.	ECRN–0049
5	09–17–04	C.S.	ECRN–0104

PART NUMBER
303525
303526

DRAWING NUMBER
303525

DYWIDAG–SYSTEMS INTERNATIONAL, USA, INC.

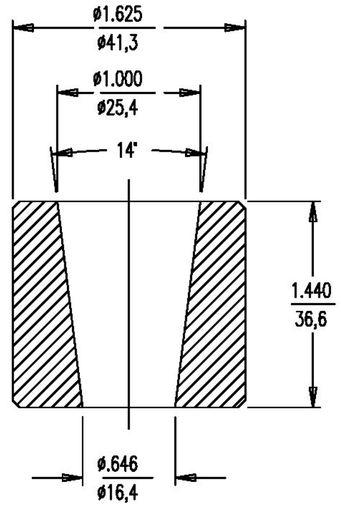

Vermont Agency of Transportation
RECEIVED
CK'D BY CLB OK'D BY DRP
December 9, 2014
RESUBMIT NO Approved AsNoted
BY C. CARLSON DATE 12/22/14

NOTE:
RECOMMENDED WEDGES:
-2-PART WEDGE 303525
FOR BARE STRAND
-3-PART WEDGE 303527
FOR GALVANIZED STRAND.

PART NO.	DESCRIPTION
303535	UNCOATED
303539	ZINC PLATED

Galvanized

DYWIDAG POST-TENSIONING SYSTEMS

0.5" BARREL CHUCK

DATE: 10-20-94 | DWG: G. MALECKI | CHK: C.S. | APP: K.S.

This drawing, the pertinent enclossures, descriptions, calculations etc. and their contents are the property of DYWIDAG SYSTEMS INTERNATIONAL, USA, INC. They are not allowed to be duplicated with-out our permission. They are also not to be shown or explained for any reason to a third party other than for reasons expressly intended by the original receiver. They have to be returned on request.

DIMENSIONS: INCH/mm
mm FOR REFERENCE ONLY

TOLERANCES:
±.020
UNLESS NOTED

MATERIAL: (6)
ASTM A108,
1045 OR 1144

Q.A.

WEIGHT
.63
LBS.

SCALE
1:1

QUALITY PLAN NUMBER:
QS00028200S

REV.	DATE	NAME	
1	02-06-96	C.S.	
2	01-27-97	C.S.	ECRN-026
3	03-11-97	C.S.	
4	05-23-97	C.S.	
5	09-29-97	A.W.	PB-105
6	03-12-04	C.S.	ECRN-101

PART NUMBER
303535
303539

DRAWING NUMBER
303535

DYWIDAG-SYSTEMS INTERNATIONAL, USA, INC. DSI