Record Plans
Contractor: CCS CONSTRUCTORS, INC.
Resident Engineer: ROBERT SUCKERT
Construction Began: OCTOBER 19, 2015
Construction Complete: SEPTEMBER 14, 2017
Record Plans By: ROBERT SUCKERT

I hereby certify that all construction required by this set of drawings has been accomplished as indicated herein.

BY: e-Signed by Robert Suckert on 2018-10-09 17:03:33 GMT _____ Resident Engineer

Date: October 09, 2018

NOTE: Any further information concerning final quantities, amounts or other details relative to this project may be found at Central Files in the electronic archives.

STATE OF VERMONT
AGENCY OF TRANSPORTATION

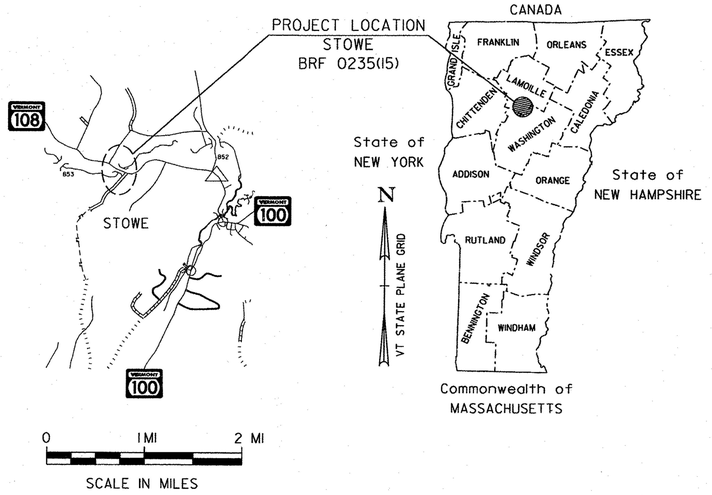

PROPOSED IMPROVEMENT
BRIDGE PROJECT
TOWN OF STOWE
COUNTY OF LAMOILLE
VT ROUTE 108 (MAJOR COLLECTOR) BRIDGE NO. 3

PROJECT LOCATION: LOCATED IN TOWN OF STOWE ON VT ROUTE 108 APPROXIMATELY 1.5 MILES WEST OF THE JUNCTION WITH VT ROUTE 100.

PROJECT DESCRIPTION: WORK TO BE PERFORMED UNDER THIS PROJECT INCLUDES REPLACEMENT OF EXISTING STRUCTURE WITH A NEW STRUCTURE INCLUDING RELATED ROADWAY ITEMS, TEMPORARY BRIDGE, AND CHANNEL WORK.

LENGTH OF STRUCTURE: 146.80 FEET
LENGTH OF ROADWAY: 753.20 FEET
LENGTH OF PROJECT: 900.00 FEET

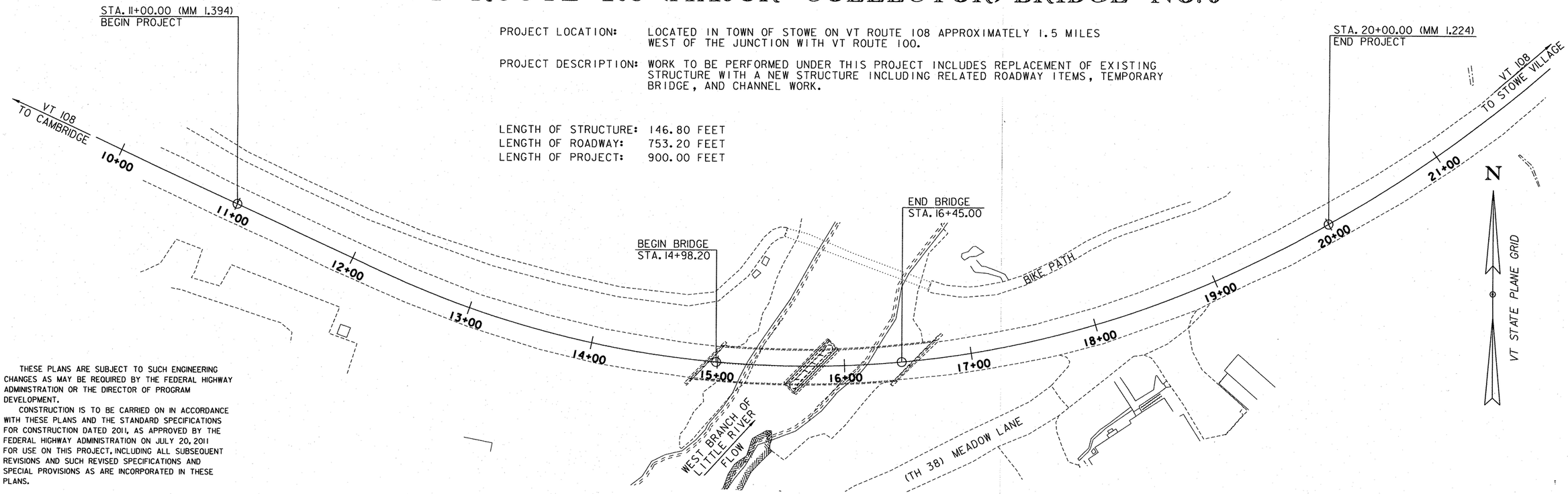

THESE PLANS ARE SUBJECT TO SUCH ENGINEERING CHANGES AS MAY BE REQUIRED BY THE FEDERAL HIGHWAY ADMINISTRATION OR THE DIRECTOR OF PROGRAM DEVELOPMENT.

CONSTRUCTION IS TO BE CARRIED ON IN ACCORDANCE WITH THESE PLANS AND THE STANDARD SPECIFICATIONS FOR CONSTRUCTION DATED 2011, AS APPROVED BY THE FEDERAL HIGHWAY ADMINISTRATION ON JULY 20, 2011 FOR USE ON THIS PROJECT, INCLUDING ALL SUBSEQUENT REVISIONS AND SUCH REVISED SPECIFICATIONS AND SPECIAL PROVISIONS AS ARE INCORPORATED IN THESE PLANS.

QUALITY ASSURANCE PROGRAM : LEVEL 2
SURVEYED BY : VTRANS SURVEYED DATE : 07/20/2011
DATUM VERTICAL NAVD 88 HORIZONTAL NAD83 (1996)

MODEL: TITLE
CLD 12-0120

STATE OF VERMONT JOHN P. BYATT NO. 8478 Structural LICENSED PROFESSIONAL ENGINEER

STATE OF VERMONT CHRISTOPHER R. GERT No. 8529 REGISTERED PROFESSIONAL ENGINEER

CLD CONSULTING ENGINEERS
540 Commercial Street
Manchester, NH 03101
(603) 668-8223
www.cldengineers.com

DIRECTOR OF PROJECT DELIVERY
APPROVED Kevin S. Marshia DATE 5/11/15

PROJECT MANAGER : ROB YOUNG, P.E.

PROJECT NAME : STOWE
PROJECT NUMBER : BRF 0235(15)

SHEET 1 OF 79 SHEETS

STATE OF VERMONT
AGENCY OF TRANSPORTATION

PRELIMINARY INFORMATION SHEET (BRIDGE)

Version 11.06.15

LRFD

INDEX OF SHEETS

PLAN SHEETS

1	TITLE SHEET
2	PRELIMINARY INFORMATION SHEET
3 - 5	TYPICAL SHEETS 1-3
6	MISCELLANEOUS DETAILS
7	TYPICAL EARTHWORK SECTIONS
8 - 10	QUANTITY SHEETS 1-3
11	BRIDGE QUANTITY SHEET
12	PROJECT NOTES
13	CONVENTIONAL SYMBOLOGY LEGEND SHEET
14 - 15	TIE SHEETS 1-2
16 - 17	LAYOUT SHEETS 1-2
18 - 19	VT 108 PROFILE SHEETS 1-2
20	MATERIAL TRANSITION AND BANKING DIAGRAM
21	MEADOW LANE PROFILE SHEET
22	UTILITY RELOCATION SHEET
23	TRAFFIC CONTROL SHEET
24	TRAFFIC CONTROL PROFILE SHEET
25	TRAFFIC CONTROL SIGN PLAN
26 - 27	TRAFFIC SIGN & LINE LAYOUT SHEETS 1-2
28	TRAFFIC SIGN SUMMARY SHEET
29	LANDSCAPE LAYOUT SHEET
30	LANDSCAPE DETAILS
31	BORING INFORMATION SHEET
32 - 33	BORING LOGS 1-2
34	PLAN AND ELEVATION
35	TYPICAL BRIDGE SECTION
36	DECK REINFORCING PLAN
37 - 38	FRAMING PLAN AND DETAILS 1-2
39	SPLICE DETAILS
40	CAMBER AND DEFLECTION DETAILS
41	BEARING DETAILS
42	ABUTMENT 1 PLAN AND ELEVATION
43	ABUTMENT 2 PLAN AND ELEVATION
44	ABUTMENT 1 PILE CAP PLAN AND ELEVATION
45	ABUTMENT 2 PILE CAP PLAN AND ELEVATION
46 - 47	WINGWALL PLAN AND ELEVATION 1-2
48	WINGWALL AND PILE DETAILS
49	SHEET PILE RETAINING WALL DETAILS
50	APPROACH SLAB DETAILS
51	REINFORCING STEEL SCHEDULE
52	BRIDGE RAIL LAYOUT
53 - 57	VT 108 CROSS SECTIONS
58 - 59	MEADOW LANE CROSS SECTIONS
60 - 63	TEMP DETOUR CROSS SECTIONS
64 - 69	CHANNEL CROSS SECTIONS
70	EPSC NARRATIVE
71 - 76	EPSC PLAN SHEETS
77 - 78	EPSC DETAILS
79	TOWN WATER LINE REFERENCE SHEET

STANDARDS LIST

B-5	SLOPE GRADING, EMBANKMENTS, MUCK	06-01-1994
B-71	STANDARD FOR RESIDENTIAL AND COMMERCIAL DRIVES	07-08-2005
E-121	STANDARD SIGN PLACEMENT - CONVENTIONAL ROAD	08-08-1995
E-141	REGULATORY SIGN DETAILS	09-20-1995
G-1	STEEL BEAM GUARDRAIL DETAILS (POST, DELINEATOR, TYPICALS)	02-10-2014
G-1BM	BOXBEAM GUARD RAIL	06-13-1997
G-1D	STEEL BEAM GUARDRAIL DETAILS (END TERMINAL, ANCHOR, MEDIAN)	02-10-2014
G-16	STEEL BEAM GUARDRAIL ATTACHMENTS TO EXISTING BRIDGE	06-01-1994
G-19	GENERIC GRADING PLANS FOR GUARDRAIL END TERMINALS	11-15-2002
J-3	MAIL BOX SUPPORT DETAILS	08-07-1995
S-364A	BRIDGE RAILING, GALVANIZED 3 RAIL BOX BEAM	04-23-2012
S-364B	GUARDRAIL APPROACH SECTION, GALVANIZED 3 RAIL BOX BEAM	04-23-2012
S-364C	GUARDRAIL APPROACH SECTION, GALVANIZED 3 RAIL BOX BEAM	04-23-2012
S-364D	GUARDRAIL APPROACH SECTION, GALVANIZED 3 RAIL BOX BEAM	04-23-2012
T-1	TRAFFIC CONTROL GENERAL NOTES	08-06-2012
T-10	CONVENTIONAL ROADS CONSTRUCTION APPROACH SIGNING	08-06-2012
T-17	TRAFFIC CONTROL MISCELLANEOUS DETAILS	08-06-2012
T-28	CONSTRUCTION SIGN DETAILS	08-06-2012
T-30	CONSTRUCTION SIGN DETAILS	08-06-2012
T-35	CONSTRUCTION ZONE LONGITUDINAL DROP-OFFS	08-06-2012
T-42	BRIDGE NUMBER PLAQUE	04-09-2014
T-45	SQUARE TUBE SIGN POST AND ANCHOR	01-02-2013

STRUCTURES DETAILS

SD-501.00	CONCRETE DETAILS AND NOTES	02-09-2012
SD-502.00	CONCRETE DETAILS AND NOTES	10-10-2012
SD-516.10	BRIDGE ASPHALTIC PLUG	08-29-2011
SD-602.00	STRUCTURAL STEEL PLATE GIRDER DETIALS AND NOTES	05-02-2011

FINAL HYDRAULIC REPORT

HYDROLOGIC DATA

Date: May 2013

DRAINAGE AREA : 23.8 sq. mi.
CHARACTER OF TERRAIN : Hilly to mountainous
STREAM CHARACTERISTICS : Sinuous, semi-alluvial, incised, past degradation
NATURE OF STREAMBED : Gravel, cobbles, some boulders and some ledge upstream

PEAK FLOW DATA

Q 2.33 =	1300 cfs	Q 50 =	3550 cfs
Q 10 =	2350 cfs	Q 100 =	4200 cfs
Q 25 =	3000 cfs	Q 500 =	5750 cfs

DATE OF FLOOD OF RECORD : Unknown
ESTIMATED DISCHARGE: Unknown
WATER SURFACE ELEV.: Unknown
NATURAL STREAM VELOCITY : @ Q50 = 13.1 fps
ICE CONDITIONS : Moderate
DEBRIS: Moderate
DOES THE STREAM REACH MAXIMUM HIGHWATER ELEV. RAPIDLY? Yes
IS ORDINARY RISE RAPID? Yes
IS STAGE AFFECTED BY UPSTREAM OR DOWNSTREAM CONDITIONS? No
IF YES, DESCRIBE:

WATERSHED STORAGE: <1%
HEADWATERS:
UNIFORM: X
IMMEDIATELY ABOVE SITE:

EXISTING STRUCTURE INFORMATION

STRUCTURE TYPE: Two-span rolled beam bridge with concrete deck
YEAR BUILT: Built 1938, reconstructed 1975
CLEAR SPAN(NORMAL TO STREAM): Two spans of 58' = 116' total
VERTICAL CLEARANCE ABOVE STREAMBED: 19'
WATERWAY OF FULL OPENING: 1500 sq. ft.
DISPOSITION OF STRUCTURE: Remove
TYPE OF MATERIAL UNDER SUBSTRUCTURE: See boring logs

WATER SURFACE ELEVATIONS AT:

Q2.33 =	731.0'	VELOCITY =	6.8 fps
Q10 =	733.2'	"	7.9 fps
Q25 =	734.1'	"	8.8 fps
Q50 =	734.9'	"	9.5 fps
Q100 =	735.6'	"	10.6 fps

LONG TERM STREAMBED CHANGES: There is evidence of past stream bed degradation

IS THE ROADWAY OVERTOPPED BELOW Q100: No
FREQUENCY: Above Q100
RELIEF ELEVATION: 741.7'
DISCHARGE OVER ROAD @Q100: None

UPSTREAM STRUCTURE

TOWN: Stowe — DISTANCE: 4,000'
HIGHWAY # : TH 5 (FAS 0236) (Luce Hill Road) — STRUCTURE #: 53
CLEAR SPAN: about 55' — CLEAR HEIGHT: 20'
YEAR BUILT: Built 1952, reconstructed 1982 — FULL WATERWAY: NA
STRUCTURE TYPE: Single span steel beam bridge with concrete deck

DOWNSTREAM STRUCTURE

TOWN: Stowe — DISTANCE: 6,400'
HIGHWAY # : TH 6 (Weeks Hill Road) — STRUCTURE #: 52
CLEAR SPAN: about 61' — CLEAR HEIGHT: 16'
YEAR BUILT: 1958 — FULL WATERWAY: NA
STRUCTURE TYPE: Single span steel beam bridge with concrete deck

LRFR LOAD RATING FACTORS

LOADING LEVELS	TRUCK						
	H-20	HL-93	3S2	6 AXLE	3A. STR.	4A. STR.	5A. SEMI
TONNAGE	20	36	36	66	30	34.5	38
INVENTORY	1.40	1.23					
POSTING							
OPERATING	1.88	1.60	3.77	2.51	2.51	3.17	3.55
COMMENTS:							

PILE DRIVING AND TESTING REQUIREMENTS

1	NOMINAL PILE DRIVING CAPACITY	400 KIP
2	PILE TEST RESISTANCE FACTOR	0.65
3	MAXIMUM PILE LENGTHS	SEE DESIGN VALUES
4	SEE GENERNAL NOTES FOR MINIMUM PILE LENGTH	

PROPOSED STRUCTURE

STRUCTURE TYPE: Single span curved girder bridge with concrete deck

CLEAR SPAN(NORMAL TO STREAM): 102'
VERTICAL CLEARANCE ABOVE STREAMBED: 16'
WATERWAY OF FULL OPENING: 1120 sq. ft.

WATER SURFACE ELEVATIONS AT:

Q2.33 =	729.7'	VELOCITY=	8.5 fps
Q10 =	731.5'	"	10.7 fps
Q25 =	732.5'	"	12.5 fps
Q50 =	733.2'	"	13.1 fps
Q100 =	734.1'	"	13.8 fps

IS THE ROADWAY OVERTOPPED BELOW Q100: No
FREQUENCY: Above Q100
RELIEF ELEVATION: 741.7'
DISCHARGE OVER ROAD @Q100: None

AVERAGE LOW ELEVATION OF SUPERSTRUCTURE: 739.4'
VERTICAL CLEARANCE: @ Q50 = 6.2'

SCOUR: Contraction scour = 1' up to Q100 and 5' at Q500.

REQUIRED CHANNEL PROTECTION: Stone Fill, Type IV

PERMIT INFORMATION

AVERAGE DAILY FLOW:	50 cfs	DEPTH OR ELEVATION:
ORDINARY LOW WATER:	25 cfs	Depth = 1'
ORDINARY HIGH WATER:	560 cfs	Depth = 3'

TEMPORARY BRIDGE REQUIREMENTS

STRUCTURE TYPE: Single span bridge
CLEAR SPAN (NORMAL TO STREAM): 80' minimum, centered on channel
VERTICAL CLEARANCE ABOVE STREAMBED: Elevation 734.0' minimum
WATERWAY AREA OF FULL OPENING: 580 sq. ft. minimum

ADDITIONAL INFORMATION

TRAFFIC MAINTENANCE NOTES

1. MAINTAIN TWO-WAY TRAFFIC ON A TEMPORARY BRIDGE.
2. TRAFFIC SIGNALS ARE NOT NECESSARY.
3. SIDEWALKS ARE NOT NECESSARY
4. THE APPROACHES FOR THE TEMPORARY BRIDGE SHALL BE PAVED.

DESIGN VALUES

1. DESIGN LIVE LOAD		HL-93
2. FUTURE PAVEMENT	d_P:	2.5 INCH
3. DESIGN SPAN	L:	145.00 FT
4. MIN. MID-SPAN POS. CAMBER @ RELEASE (PRESTRESSED UNITS)	Δ:	---
5. PRESTRESSING STRAND	f_y:	---
6. PRESTRESSED CONCRETE STRENGTH	f'_c:	---
7. PRESTRESSED CONCRETE RELEASE STRENGTH	f'_{ci}:	---
8. CONCRETE, HIGH PERFORMANCE CLASS AA	f'_c:	---
9. CONCRETE, HIGH PERFORMANCE CLASS A	f'_c:	4.0 KSI
10. CONCRETE, HIGH PERFORMANCE CLASS B	f'_c:	3.5 KSI
11. CONCRETE, CLASS C	f'_c:	---
12. REINFORCING STEEL	f_y:	60 KSI
13. STRUCTURAL STEEL AASHTO M270 (WEATHERING)	f_y:	50 KSI
14. SOIL UNIT WEIGHT	γ:	0.140 KCF
15. NOMINAL BEARING RESISTANCE OF SOIL	q_n:	---
16. SOIL BEARING RESISTANCE FACTOR (REFER TO AASHTO LRFD)	ϕ:	---
17. NOMINAL BEARING RESISTANCE OF ROCK	q_n:	---
18. ROCK BEARING RESISTANCE FACTOR (REFER TO AASHTO LRFD)	ϕ:	---
19. NOMINAL AXIAL PILE RESISTANCE	q_p:	521 KIP
20. PILE YIELD STRENGTH ASTM A572	f_y:	50 KSI
21. PILE SIZE		HP 12x63
22. EST. PILE LENGTH	L_p:	64' ABUT 1
	L_p:	47' ABUT 2
23. PILE RESISTANCE FACTOR	ϕ:	0.50
24. LATERAL PILE DEFLECTION	Δ:	0.74 IN
25. BASIC WIND SPEED	V_{3s}:	---
26. MINIMUM GROUND SNOW LOAD	p_g:	---
27. SEISMIC DATA PGA: ---	S_s:	---
	S_1:	---

PROJECT NAME: STOWE
PROJECT NUMBER: BRF 0235(15)

AS BUILT "REBAR" DETAIL

LEVEL I	LEVEL II	LEVEL III
TYPE:	TYPE:	TYPE:
GRADE:	GRADE:	GRADE:

TRAFFIC DATA

YEAR	ADT	DHV	% D	% T	ADTT
2014	8200	1100	52	5.7	480
2034	8700	1200	52	8.6	780

20 year ESAL for flexible pavement from 2014 to 2034 : 1920000
40 year ESAL for flexible pavement from 2014 to 2054 : 4446000
Design Speed : 30 mph

TEMPORARY BRIDGE PROFILE ALONG TEMP CL

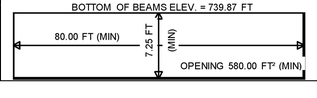

MODEL: PI
CLD 12-0120

FILE NAME: z88cl90pi.dgn
PROJECT LEADER: J. BYATT
DESIGNED BY: K. RUTTER
PRELIMINARY INFORMATION SHEET

PLOT DATE: 6/1/2015
DRAWN BY: M. SMITH
CHECKED BY: J. BYATT
SHEET 2 OF 79

MATERIAL TOLERANCES

SURFACE	
- PAVEMENT (TOTAL THICKNESS)	+/- 1/4"
- AGGREGATE SURFACE COURSE	+/- 1/2"
SUBBASE	+/- 1"
SAND BORROW	+/- 1"

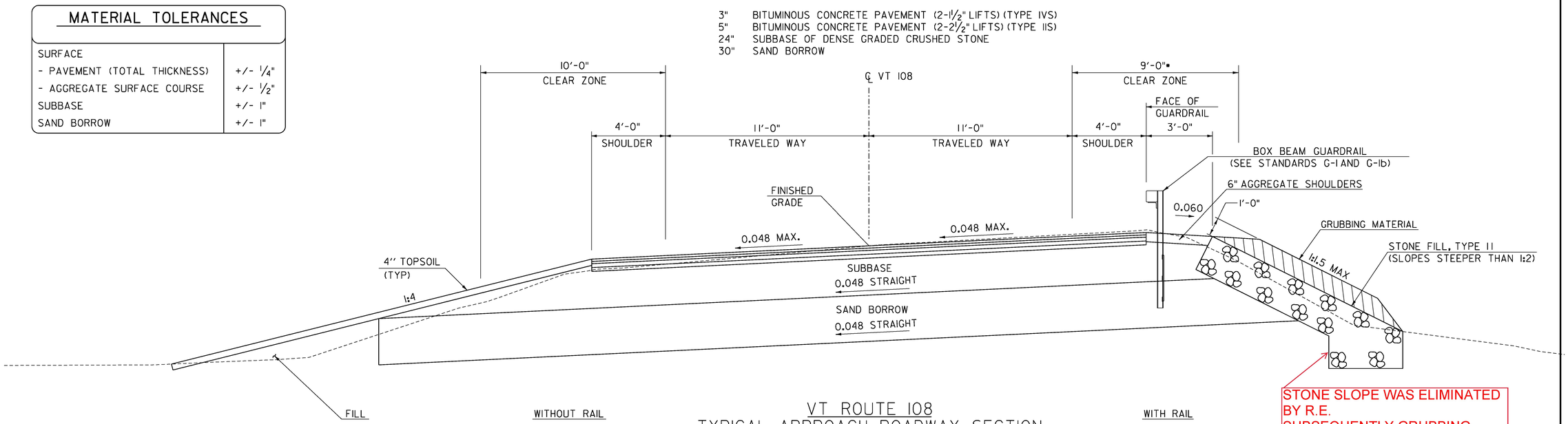

STONE SLOPE WAS ELIMINATED BY R.E.
SUBSEQUENTLY GRUBBING MATERIAL WAS ELIMINATED AS WELL.

VT ROUTE 108
TYPICAL APPROACH ROADWAY SECTION

SCALE: 3/8" = 1'-0"

•BASED ON 5'-0" DEFLECTION FOR BOX BEAM GUARDRAIL

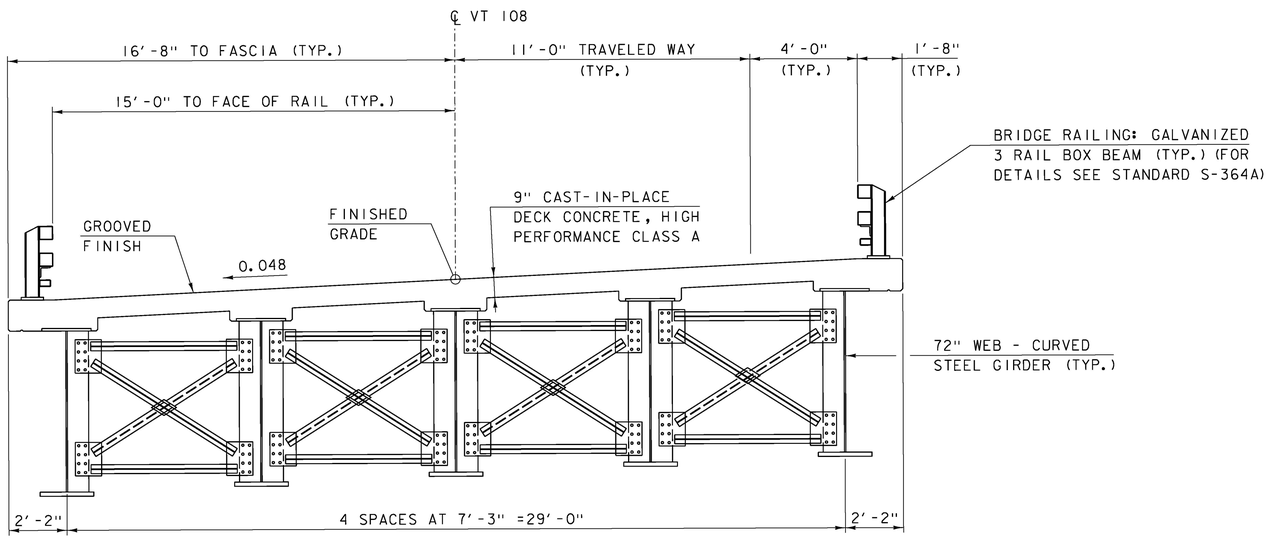

TYPICAL BRIDGE SECTION

SCALE: 3/8" = 1'-0"

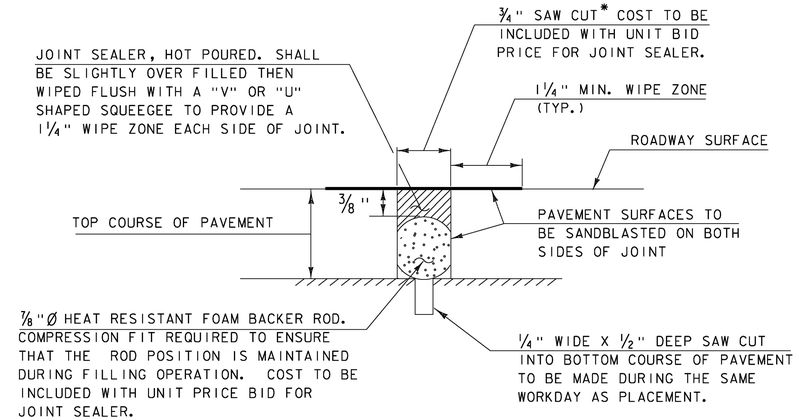

SAWED PAVEMENT JOINT DETAIL

(NOT TO SCALE)

* JOINT IS TO BE LOCATED ACCURATELY BY STRING LINING, OR OTHER MEANS, PRIOR TO PAVING, SO THAT THE SAW CUT WILL BE MADE DIRECTLY OVER THE END OF CONCRETE DECK. JOINT SHALL BE CUT DRY IN A SINGLE PASS AND BE SEALED WITHIN 24 HOURS OR PRIOR TO EXPOSURE TO TRAFFIC. JOINT SHALL BE CLEANED PRIOR TO APPLYING THE JOINT SEALER. ALL WORK SHALL BE PAID UNDER ITEM 524.11, "JOINT SEALER, HOT POURED".

CLD 12-0120 MODEL: 01

PROJECT NAME: STOWE
PROJECT NUMBER: BRF 0235(15)

FILE NAME: z88cl90typ.dgn
PROJECT LEADER: J. BYATT
DESIGNED BY: K. RUTTER
TYPICAL SHEET 1

PLOT DATE: 5/8/2015
DRAWN BY: S. FORTIER
CHECKED BY: C. GREGORY
SHEET 3 OF 79

TEMPORARY DETOUR CROSS SLOPE			
STA	LT	RT	
100+00	-8.02%	1.28%	MATCH EXISTING
100+56	-4.73%	-2.00%	
101+03	-2.00%	-2.00%	NORMAL CROWN
101+46	-2.00%	-2.00%	NORMAL CROWN
101+86	-2.00%	0.00%	REMOVE CROWN
102+26	-2.00%	2.00%	REVERSE CROWN
102+78	-2.00%	2.00%	REVERSE CROWN
103+18	0.00%	0.00%	BEGIN BRIDGE
103+72	0.00%	0.00%	END BRIDGE
104+12	-2.00%	2.00%	REVERSE CROWN
106+09	-2.00%	2.00%	REVERSE CROWN
106+50	0.00%	0.00%	CROWN REMOVED
106+90	2.00%	-2.00%	REVERSE CROWN
107+40	2.00%	-2.00%	REVERSE CROWN
108+20	-2.60%	2.80%	MATCH EXISTING RT LANE
108+80	-6.20%	MATCH EXISTING	MATCH EXISTING LT AND RT LANE

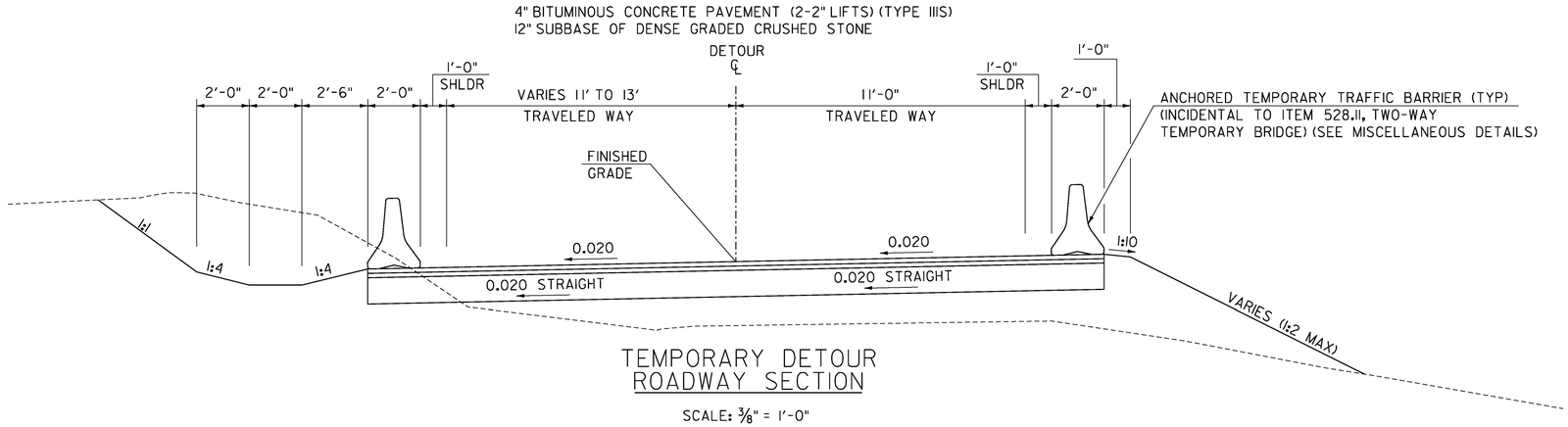

TEMPORARY DETOUR ROADWAY SECTION

SCALE: 3/8" = 1'-0"

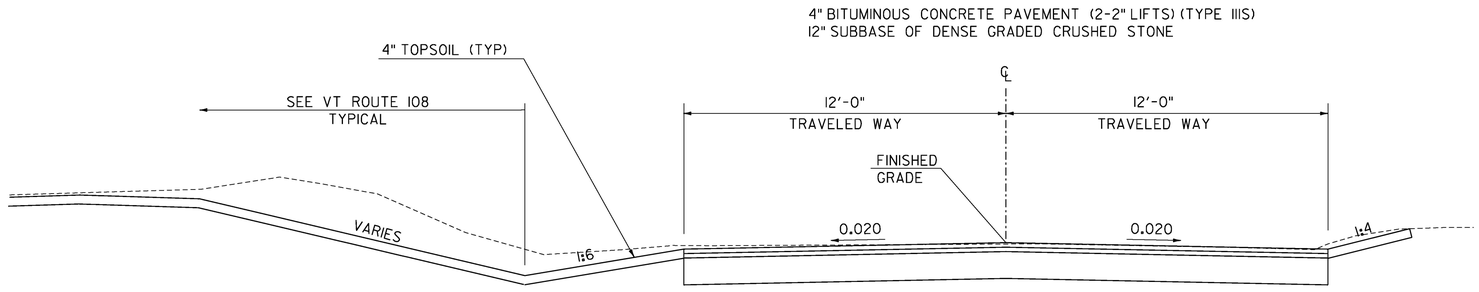

MEADOW LANE - PAVED
STA ~~42+33~~ TO 43+20

41+70

SCALE: 3/8" = 1'-0"

PAVING OF MEADOW LANE EXTENDED PER R.E. SUCKERT

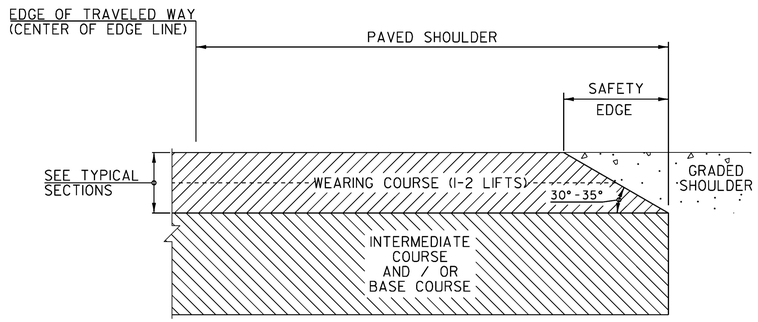

SAFETY EDGE DETAIL

NOT TO SCALE

SAFETY EDGE NOTES

1. THE EDGE OF PAVEMENT SHALL BE FORMED IN SUCH A WAY THAT THE BITUMINOUS CONCRETE PAVEMENT IS EXTRUDED OR COMPRESSED TO FORM THE 30 TO 35 DEGREE ANGLE. DEVICES THAT SIMPLY STRIKE-OFF THE MIX WITHOUT PROVIDING ANY COMPACTIVE EFFORT WILL NOT BE ALLOWED.

2. THE PAVED SHOULDER EXTENDS FROM THE EDGE OF TRAVELED WAY TO THE EDGE OF THE WEARING COURSE, INCLUDING THE "SAFETY EDGE".

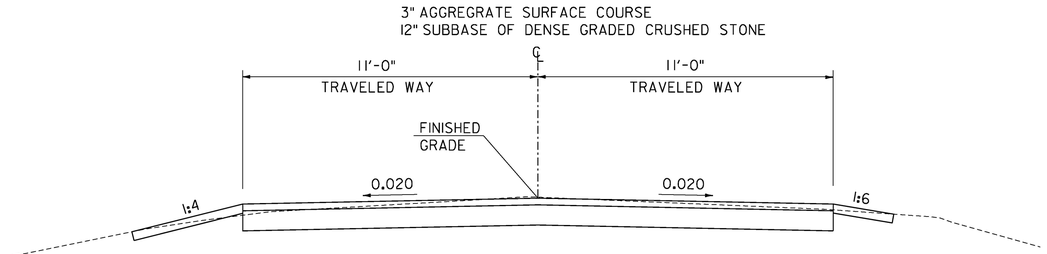

MEADOW LANE - GRAVEL
STA 40+45 TO ~~42+33~~

SCALE: 3/8" = 1'-0"

41+70

CLD 12-020 MODEL: 02

PROJECT NAME:	STOWE
PROJECT NUMBER:	BRF 0235(15)
FILE NAME: z88cl90typ.dgn	PLOT DATE: 6/1/2015
PROJECT LEADER: J. BYATT	DRAWN BY: S. FORTIER
DESIGNED BY: K. RUTTER	CHECKED BY: C. GREGORY
TYPICAL SHEET 2	SHEET 4 OF 79

CLD CONSULTING ENGINEERS

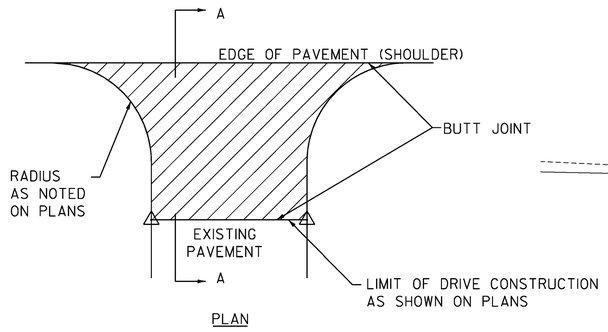

PLAN

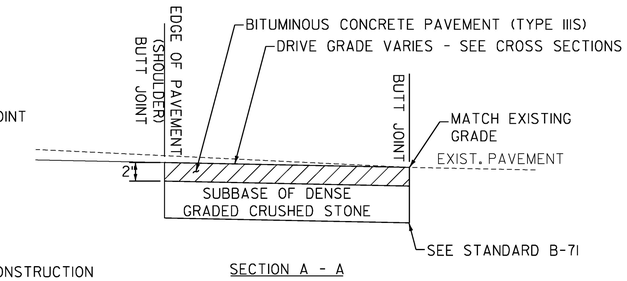

SECTION A - A

PAVED DRIVEWAY DETAIL

(NOT TO SCALE)

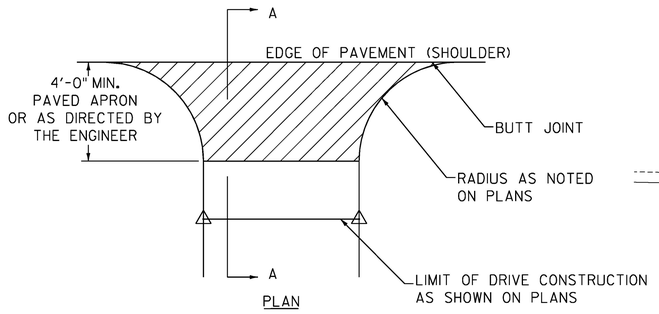

PLAN

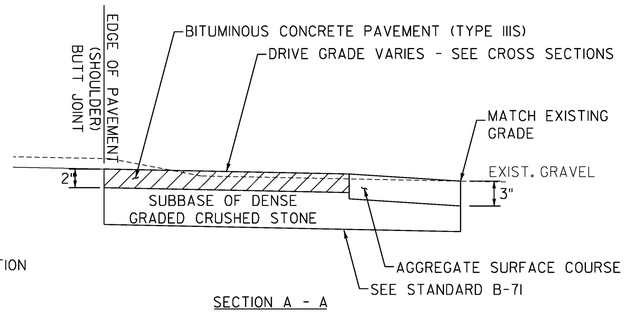

SECTION A - A

GRAVEL DRIVEWAY DETAIL

(NOT TO SCALE)

NOTES

1. ALL UNPAVED DRIVES SHALL HAVE A 4' APRON AND BE PAVED WITH 2" BITUMINOUS CONCRETE PAVEMENT (TYPE IIIS). REFER TO STANDARD PLAN B-7I FOR ADDITIONAL INFORMATION. DRIVEWAYS LOCATED ALONG GRAVEL ROADWAYS SHALL NOT RECEIVE A PAVED APRON, THE DRIVEWAY WILL BE TIED INTO THE GRAVEL ROADWAY WITH AGGREGATE SURFACE COURSE.

2. BITUMINOUS CONCRETE PAVEMENT WORK, WHICH WILL INVOLVE SOME HAND-WORK (SUCH AS PUBLIC AND/OR PRIVATE DRIVES), SHALL BE PAID FOR UNDER ITEM 900.675 - SPECIAL PROVISION (HAND-PLACED BITUMINOUS CONCRETE MATERIAL, DRIVES). BITUMINOUS CONCRETE MATERIAL PLACED BY MECHANICAL METHODS AT THESE LOCATIONS AND ALL OTHER BITUMINOUS CONCRETE PAVEMENT MATERIAL PLACED WITHIN THE PROJECT LIMITS SHALL BE PAID UNDER ITEM 900.680 SPECIAL PROVISION (BITUMINOUS CONCRETE PAVEMENT, SMALL QUANTITY).

LEGEND

ITEM 900.675 - SPECIAL PROVISION (HAND-PLACED BITUMINOUS CONCRETE MATERIAL, DRIVES)

CONSULTING ENGINEERS

PROJECT NAME: STOWE
PROJECT NUMBER: BRF 0235(15)

FILE NAME: z88cl90typ.dgn
PROJECT LEADER: J. BYATT
DESIGNED BY: K. RUTTER
TYPICAL SHEET 3

PLOT DATE: 5/8/2015
DRAWN BY: K. RUTTER
CHECKED BY: C. GREGORY
SHEET 5 OF 79

CLD 12-0120 MODEL: 03

ANCHORED TEMPORARY TRAFFIC BARRIER

(NOT TO SCALE)

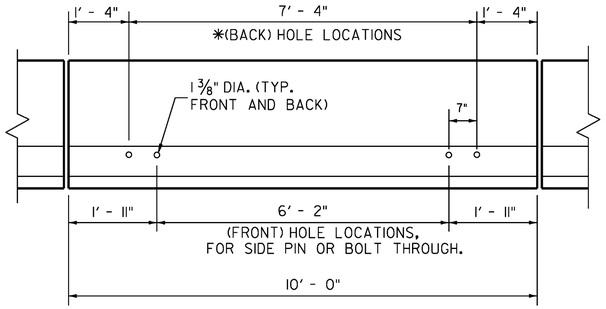

DETAIL 1

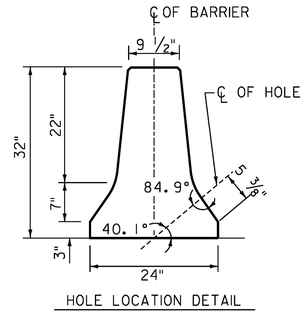

HOLE LOCATION DETAIL

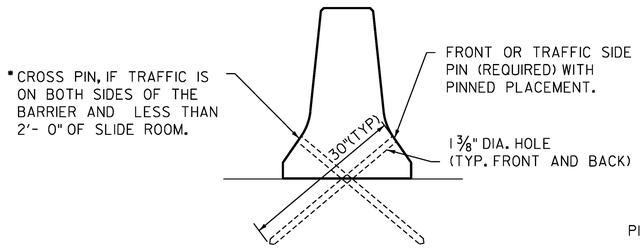

DETAIL 2

PLACEMENT ON BITUMINOUS CONCRETE PAVEMENT OR TREATED BASE MATERIAL (30" PIN REQUIRED)

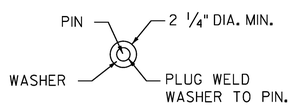

VIEW A-A

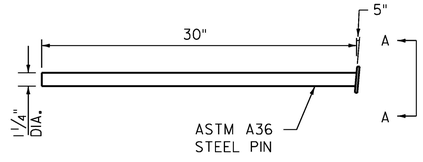

(30") PIN DETAIL
SEE DETAIL 2

CORE DRILLING EXISTING BARRIER

CORE DRILLING EXISTING CONCRETE BARRIER IS PERMITTED. HOLES SHALL BE DRILLED WITH CORING OR MASONRY DRILLING TYPE EQUIPMENT. PERCUSSION (STAR) DRILLING SHALL NOT BE USED. A SPECIAL DRILL BIT (TO CUT THROUGH EXISTING REINFORCING) WILL LIKELY BE REQUIRED. SPALLS IN THE CONCRETE EXCEEDING 1/2" SHALL BE PATCHED.

GENERAL NOTES

1. THE DETAILS PROVIDED ARE INTENDED TO BE A SCHEMATIC ONLY. THE EXACT LAYOUT OF THE ANCHORS SHALL BE DETERMINED BY THE CONTRACTOR AND APPROVED BY THE ENGINEER AND BE BASED FROM MEASUREMENT OF THE BARRIER ONSITE. THE ANCHORING SYSTEM SHALL BE CRASH TESTED FOR A MINIMUM TL-3 RATING.

2. THESE DETAILS PROVIDE A METHOD OF LATERALLY RESTRAINING PRECAST CONCRETE BARRIER TO LIMIT DEFLECTIONS UNDER NORMALLY EXPECTED PASSENGER VEHICLE IMPACTS. THESE DETAILS ARE INTENDED FOR USE IN WORK ZONES, PRIMARILY ON PAVEMENT WHERE TEMPORARY BARRIER MUST BE PLACED LESS THEN 2 FEET FROM THE LONGITUDINAL EDGE OF THE DECK OR DROPOFF AND PARALLEL TO THE DIRECTION OF TRAVEL. OTHER APPLICATIONS OF THESE DETAILS ARE ACCEPTABLE AS DIRECTED BY THE ENGINEER.

3. EACH PRECAST CONCRETE BARRIER SECTION SHALL HAVE A MINIMUM OF TWO OR TOTAL OF FOUR 1 3/8" ID, HOLES FORMED OR CORED THROUGH THE BARRIER.

4. THE DRILLING OF THE TRAVEL SURFACE IS ACCOMPLISHED BY PLACING THE PRE-DRILLED BARRIER SECTION ON THE TRAVEL SURFACE IN THE DESIRED POSITION. THE HOLE IS DRILLED WITH THE BIT PASSING THROUGH THE HOLE IN THE BARRIER. THE BIT IS TO BE INSERTED INTO THE HOLE IN THE BARRIER SO THAT THE TRAVEL SURFACE IS DRILLED TO A POINT WHICH IS SLIGHTLY MORE THAN THE PIN LENGTH.

5. NOTE THAT STEEL WASHERS HAVE BEEN WELDED TO THE TOP OF THE STEEL PINS TO AID IN THE REMOVAL OF THE PINS, WHEN THE BARRIER IS REMOVED.

6. PAYMENT FOR FORMING OR CORING OF HOLES IN THE BARRIER, DRILLING OF HOLES IN BRIDGE DECK OR PAVEMENT, FABRICATION AND MATERIALS FOR THE 1 1/4" PINS, INSTALLATION OF PINS, AND ANY REPAIR TO THE BARRIER SHALL BE CONSIDERED INCIDENTAL TO ITEM 528.11, TWO-WAY TEMPORARY BRIDGE.

7. THE BARRIER AND TRAVEL SURFACE WILL BE REPAIRED AS DIRECTED BY THE ENGINEER.

8. PROVIDE GALVANIZED BOLTS, NUTS, AND PLATE WASHERS. ALL STEEL PINS SHALL BE GALVANIZED. ALL NUTS, BOLTS, PLATE WASHERS, AND PINS SHALL BE INCIDENTAL TO ITEM 528.11, TWO-WAY TEMPORARY BRIDGE.

NOT TO SCALE

CLD 12-0120 MODEL: 04

PROJECT NAME: STOWE	
PROJECT NUMBER: BRF 0235(15)	
FILE NAME: z88c190typ.dgn	PLOT DATE: 6/1/2015
PROJECT LEADER: J. BYATT	DRAWN BY: M. SMITH
DESIGNED BY: K. RUTTER	CHECKED BY: N. FOX
MISCELLANEOUS DETAILS	SHEET 6 OF 79

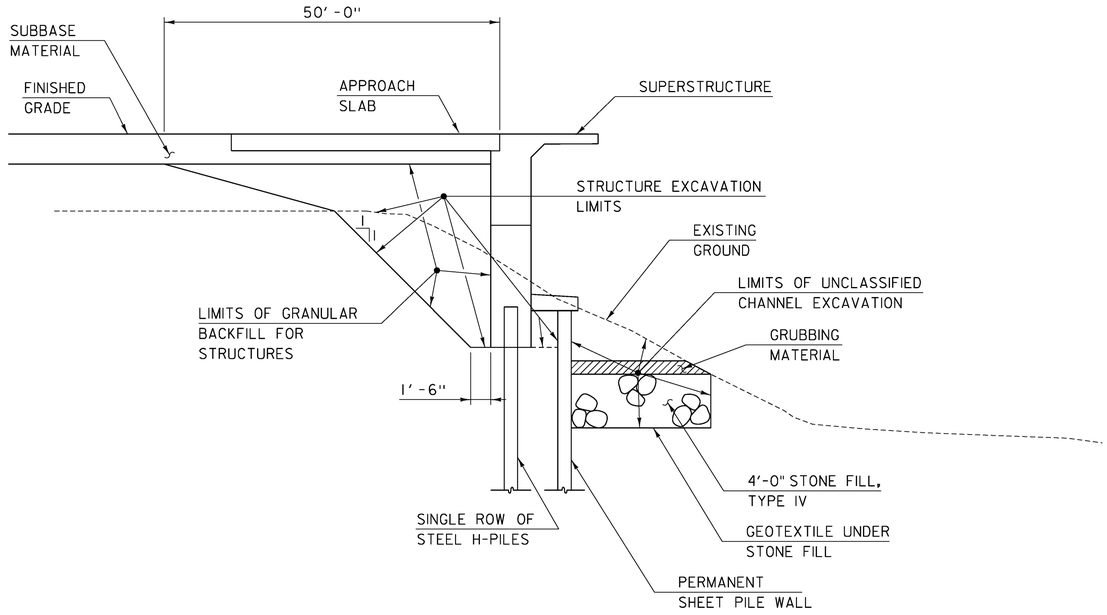

TYPICAL ABUT. 1 EARTHWORK SECTION

SCALE: 3/16" = 1'-0"

1. ACTUAL EXCAVATION LIMITS SHALL BE DETERMINED BY THE CONTRACTOR. HOWEVER, PAYMENT UNDER CONTRACT ITEM 204.25 WILL ONLY BE MADE TO THE LIMITS SHOWN.

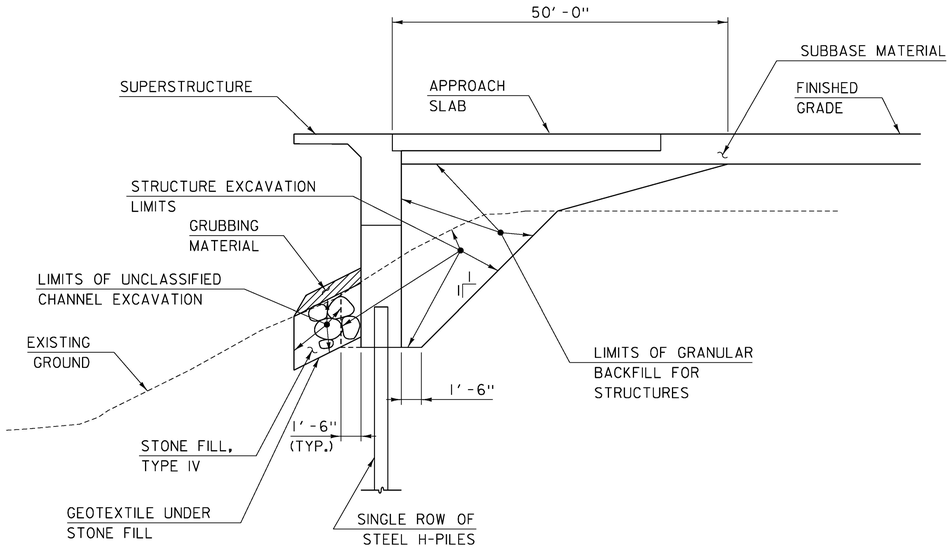

TYPICAL ABUT. 2 EARTHWORK SECTION

SCALE: 3/16" = 1'-0"

1. ACTUAL EXCAVATION LIMITS SHALL BE DETERMINED BY THE CONTRACTOR. HOWEVER, PAYMENT UNDER CONTRACT ITEM 204.25 WILL ONLY BE MADE TO THE LIMITS SHOWN.

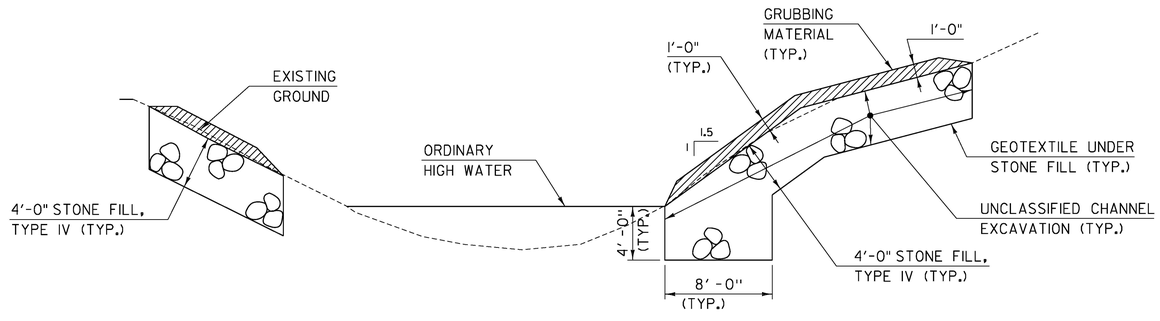

TYPICAL CHANNEL SECTION

SCALE: 3/16" = 1'-0"

- WHENEVER CHANNEL SLOPE INTERSECTS ROADWAY SUBBASE, GRUBBING MATERIAL SHALL BEGIN AT THE BOTTOM OF SUBBASE.

CLD 12-020 MODEL: TYPICAL EARTH WORKS

PROJECT NAME:	STOWE
PROJECT NUMBER:	BRF 0235(15)
FILE NAME: z88cl90sub.dgn	PLOT DATE: 5/8/2015
PROJECT LEADER: J. BYATT	DRAWN BY: M. SMITH
DESIGNED BY: J. FRENCH	CHECKED BY: J. BYATT
TYPICAL EARTHWORK SECTIONS	SHEET 7 OF 79

CONSULTING ENGINEERS

STATE OF VERMONT
AGENCY OF TRANSPORTATION

QUANTITY SHEET 1

SUMMARY OF ESTIMATED QUANTITIES

ROADWAY	TRAINING	LANDSCAPING	EROSION CONTROL	BRIDGE	FULL C.E. ITEMS
1					
6200					
				535	
2850					
50					
1					
				430	
				340	
3150					
2600					
50					
155					
26					
1					
				281	
				72	
				1	
				606	
				2227	
				2	
				301540	
380				11612	
				46091	
				1	
				550	
				44	
				63	
				62	
				299.75	
				1	
				1	
3					
10					
52					
52					
52					
52					

TOTALS

GRAND TOTAL	FINAL
1	
6200	
535	
2850	
50	
1	
430	
340	
3150	
2600	
50	
155	
26	
1	
281	
72	
1	
606	
2227	
2	
301540	
11992	
46091	
1	
550	
44	
63	
62	
299.75	
1	
1	
3	
10	
52	
52	
52	
52	

DESCRIPTIONS

UNIT	ITEMS	ITEM NUMBER	ROUND
LS	CLEARING AND GRUBBING, INCLUDING INDIVIDUAL TREES AND STUMPS	201.10	-
CY	COMMON EXCAVATION	203.15	39
CY	UNCLASSIFIED CHANNEL EXCAVATION	203.27	-
CY	SAND BORROW	203.31	44
CY	TRENCH EXCAVATION OF EARTH	204.20	5.1
CY	TRENCH EXCAVATION OF EARTH, EXPLORATORY (N.A.B.I.)	204.22	-
CY	STRUCTURE EXCAVATION	204.25	-
CY	GRANULAR BACKFILL FOR STRUCTURES	204.30	-
SY	COLD PLANING, BITUMINOUS PAVEMENT	210.10	20
CY	SUBBASE OF DENSE GRADED CRUSHED STONE	301.35	41
CY	AGGREGATE SURFACE COURSE	401.10	4.3
TON	AGGREGATE SHOULDERS	402.12	3
CWT	EMULSIFIED ASPHALT	404.65	1.3
LU	PRICE ADJUSTMENT, ASPHALT CEMENT (N.A.B.I.)	406.50	-
CY	CONCRETE, HIGH PERFORMANCE CLASS A	501.33	-
CY	CONCRETE, HIGH PERFORMANCE CLASS B	501.34	-
LS	FURNISHING EQUIPMENT FOR DRIVING PILING	504.10	-
LF	STEEL PILING, HP 12 X 63	505.155	-
SF	PERMANENT STEEL SHEET PILING (Z MIN.= 48.9 IN^3)	505.35	
EACH	DYNAMIC PILE LOADING TEST	505.45	-
LB	STRUCTURAL STEEL, CURVED PLATE GIRDER	506.56	-
LB	REINFORCING STEEL, LEVEL I	507.11	-
LB	REINFORCING STEEL, LEVEL II	507.12	-
LS	SHEAR CONNECTORS (1180 - 7" x 7/8")	508.15	
SY	LONGITUDINAL DECK GROOVING	509.10	
GAL	WATER REPELLENT, SILANE	514.10	-
LF	BRIDGE EXPANSION JOINT, ASPHALTIC PLUG	516.10	-
LF	JOINT SEALER, HOT POURED	524.11	
LF	BRIDGE RAILING, GALVANIZED 3 RAIL BOX BEAM	525.335	-
LS	TWO-WAY TEMPORARY BRIDGE (3840 SF - EST.)	528.11	
EACH	REMOVAL OF STRUCTURE (5747 SF - EST.)	529.15	
CY	CONCRETE, CLASS B	541.25	0.95
CY	CONTROLLED DENSITY (FLOWABLE) FILL	541.45	0.3
	BEGIN OPTION AA		
LF	18" CAAP .060 (2-2/3 X 1/2)	601.0215	-
LF	18" PCCSP .064 (2-2/3 X 1/2)	601.0415	-
LF	18" RCP CLASS III	601.0815	-
LF	18" CPEP(SL)	601.2615	-
	END OPTION AA		

DETAILED SUMMARY OF QUANTITIES

QUANTITIES	UNIT	ITEMS
		EARTHWORK SUMMARY
6200	CY	COMMON EXCAVATION
535	CY	UNCLASSIFIED CHANNEL EXCAVATION
430	CY	STRUCTURE EXCAVATION
7165		SUBTOTAL
5		ROUNDING
7170		TOTAL FILL AVAILABLE
86		TOTAL FILL REQUIRED (1.15 FACTOR)
7084		TOTAL WASTE

CLD 12-0120 MODEL: OS#1

CONSULTING ENGINEERS

PROJECT NAME: STOWE
PROJECT NUMBER: BRF 0235(15)

FILE NAME: z88c190qty.dgn
PROJECT LEADER: J. BYATT
DESIGNED BY: K. RUTTER
QUANTITY SHEET 1

PLOT DATE: 6/1/2015
DRAWN BY: K. RUTTER
CHECKED BY: C. GREGORY
SHEET 8 OF 79

STATE OF VERMONT
AGENCY OF TRANSPORTATION

QUANTITY SHEET 2

SUMMARY OF ESTIMATED QUANTITIES									TOTALS		DESCRIPTIONS				DETAILED SUMMARY OF QUANTITIES		
	ROADWAY	TRAINING	LANDSCAPING	EROSION CONTROL	BRIDGE	FULL C.E. ITEMS	GRAND TOTAL	FINAL	UNIT	ITEMS	ITEM NUMBER	ROUND	QUANTITIES	UNIT	ITEMS
										BEGIN OPTION BB					
	1						1		EACH	18" CAAPES .060 (2-2/3 X 1/2)	601.6215	-			
	1						1		EACH	18" RCPES CLASS III	601.6815	-			
	1						1		EACH	18" CPEPES	601.7015	-			
										END OPTION BB					
	1						1		HR	POWER BROOM RENTAL, TYPE I	608.30	0.5			
	200						200		MGAL	DUST CONTROL WITH WATER	609.10	16			
				150			150		CY	STONE FILL, TYPE II	613.11	7			
					640		640		CY	STONE FILL, TYPE IV	613.13	-			
	2						2		EACH	YIELDING MARKER POSTS	619.17	-			
	762						762		LF	BOX BEAM GUARDRAIL	621.30	-			
	4						4		EACH	MANUFACTURED TERMINAL SECTION, TANGENT	621.51	-			
					4		4		EACH	GUARDRAIL APPROACH SECTION, GALVANIZED 3 RAIL BOX BEAM	621.725	-			
	850						850		LF	REMOVAL AND DISPOSAL OF GUARDRAIL	621.80	-			
	300						300		HR	UNIFORMED TRAFFIC OFFICERS	630.10	EST.			
	600						600		HR	FLAGGERS	630.15	EST.			
						1	1		LS	FIELD OFFICE, ENGINEERS	631.10	-			
						1	1		LS	TESTING EQUIPMENT, CONCRETE	631.16	-			
						1	1		LS	TESTING EQUIPMENT, BITUMINOUS	631.17	-			
						3000	3000		DL	FIELD OFFICE TELEPHONE (N.A.B.I.)	631.26	EST.			
		520					520		HR	EMPLOYEE TRAINEESHIP	634.10				
	1						1		LS	MOBILIZATION/DEMOBILIZATION	635.11	-			
	1						1		LS	TRAFFIC CONTROL	641.10	-			
	2						2		EACH	PORTABLE CHANGEABLE MESSAGE SIGN	641.15	-			
										BEGIN OPTION CC					
	2250						2250		LF	DURABLE 4 INCH WHITE LINE, THERMOPLASTIC	646.402	1			
	2250						2250		LF	DURABLE 4 INCH WHITE LINE, POLYUREA	646.404	1			
										END OPTION CC					
										BEGIN OPTION DD					
	2200						2200		LF	DURABLE 4 INCH YELLOW LINE, TYPE C TAPE	646.4113	-			
	2200						2200		LF	DURABLE 4 INCH YELLOW LINE, POLYUREA	646.414	-			
										END OPTION DD					
										BEGIN OPTION EE					
	15						15		LF	DURABLE 24 INCH STOP BAR, THERMOPLASTIC	646.482	4			
	15						15		LF	DURABLE 24 INCH STOP BAR, POLYUREA	646.484	4			
										END OPTION EE					
										BEGIN OPTION FF					
	4						4		EACH	DURABLE LETTER OR SYMBOL, THERMOPLASTIC	646.492	-			
	4						4		EACH	DURABLE LETTER OR SYMBOL, POLYUREA	646.494	-			
										END OPTION FF					

CLD 12-0120 MODEL: QS#2

CONSULTING ENGINEERS

PROJECT NAME: STOWE
PROJECT NUMBER: BRF 0235(15)

FILE NAME: z88cl90qty.dgn
PROJECT LEADER: J. BYATT
DESIGNED BY: K. RUTTER
QUANTITY SHEET 2

PLOT DATE: 5/8/2015
DRAWN BY: K. RUTTER
CHECKED BY: C. GREGORY
SHEET 9 OF 79

STATE OF VERMONT
AGENCY OF TRANSPORTATION

QUANTITY SHEET 3

SUMMARY OF ESTIMATED QUANTITIES								TOTALS		DESCRIPTIONS				DETAILED SUMMARY OF QUANTITIES		
ROADWAY	TRAINING	LANDSCAPING	EROSION CONTROL	BRIDGE	FULL C.E. ITEMS	GRAND TOTAL	FINAL	UNIT	ITEMS	ITEM NUMBER	ROUND	QUANTITIES	UNIT	ITEMS
2250						2250		LF	TEMPORARY 4 INCH WHITE LINE, PAINT	646.602	1			
2200						2200		LF	TEMPORARY 4 INCH YELLOW LINE, PAINT	646.612	-			
15						15		LF	TEMPORARY 24 INCH STOP BAR, PAINT	646.682	4			
4						4		EACH	TEMPORARY LETTER OR SYMBOL, PAINT	646.692	-			
			230	705		935		SY	GEOTEXTILE UNDER STONE FILL	649.31	5.6			
			560			560		SY	GEOTEXTILE FOR SILT FENCE	649.51	3			
			300			300		SY	GEOTEXTILE FOR SILT FENCE, WOVEN WIRE REINFORCED	649.515	1			
			180			180		SY	GEOTEXTILE FOR FILTER CURTAIN	649.61	6			
			110			110		LB	SEED	651.15	1			
			380			380		LB	FERTILIZER	651.18	3			
			1.5			1.5		TON	AGRICULTURAL LIMESTONE	651.20	0.1			
			1.5			1.5		TON	HAY MULCH	651.25	0.1			
370						370		CY	TOPSOIL	651.35	8			
			155	133		288		SY	GRUBBING MATERIAL	651.40	3			
			1			1		LS	EPSC PLAN	652.10	-			
			180			180		HR	MONITORING EPSC PLAN	652.20	1			
			4500			4500		LU	MAINTENANCE OF EPSC PLAN (N.A.B.I.)	652.30	25			
			800			800		SY	TEMPORARY EROSION MATTING	653.20	7			
			450			450		LF	BARRIER FENCE	653.50	15			
			1625			1625		LF	PROJECT DEMARCATION FENCE	653.55	9			
		3				3		EACH	EVERGREEN TREES (PICEA OMORIKA) (B&B) (7' - 8' HEIGHT)	656.20	-			
		18				18		EACH	EVERGREEN TREES (PICES GLAUCA) (B&B) (7' - 8' HEIGHT)	656.20	-			
		20				20		EACH	DECIDUOUS SHRUBS (CORNUS SERICEA ARCTIC FIRE) (CONT.) (2 GALLON)	656.35	-			
		20				20		MGAL	LANDSCAPE WATERING	656.65	4			
		225				225		CY	LANDSCAPE BACKFILL, TRUCK MEASUREMENT	656.80	6			
		1				1		LS	TREE PROTECTION	656.85	-			
1						1		SF	TRAFFIC SIGNS, TYPE A	675.20	0.16			
50						50		LF	SQUARE TUBE SIGN POST AND ANCHOR	675.341	-			**SPECIAL PROVISION (BITUMINOUS CONCRETE PAVEMENT, SMALL QUANTITY)**
2						2		EACH	REMOVING SIGNS	675.50	-			
1						1		EACH	ERECTING SALVAGED SIGNS	675.60	-	792	TON	TYPE IIS (VT108)
1						1		LU	PRICE ADJUSTMENT, FUEL (N.A.B.I.)	690.50	-	67	TON	TYPE IIIS (MEADOW LANE)
13						13		EACH	SPECIAL PROVISION (CPM SCHEDULE)	900.620	-	542	TON	TYPE IVS (VT108)
1						1		LU	SPECIAL PROVISION (MAT DENSITY PAY ADJUSTMENT, SMALL QUANTITY) (N.A.B.I.)	900.650	-	1401	TON	SUBTOTAL
1						1		LU	SPECIAL PROVISION (MIXTURE PAY ADJUSTMENT) (N.A.B.I.)	900.650	-	49	TON	ROUNDING
				371		371		SF	SPECIAL PROVISION (RETAINING WALL)	900.670	-	1450	TON	TOTAL
25						25		SY	SPECIAL PROVISION (HAND-PLACED BITUMINOUS CONCRETE MATERIAL, DRIVES)	900.675	3			
1450						1450		TON	SPECIAL PROVISION (BITUMINOUS CONCRETE PAVEMENT, SMALL QUANTITY)	900.680	49			

CLD 12-0120 MODEL: QS#3

CONSULTING ENGINEERS

PROJECT NAME: STOWE
PROJECT NUMBER: BRF 0235(15)

FILE NAME: z88cl90qty.dgn
PROJECT LEADER: J. BYATT
DESIGNED BY: K. RUTTER
QUANTITY SHEET 3

PLOT DATE: 5/8/2015
DRAWN BY: K. RUTTER
CHECKED BY: C. GREGORY
SHEET 10 OF 79

STATE OF VERMONT
AGENCY OF TRANSPORTATION

BRIDGE QUANTITY SHEET 1

SUMMARY OF BRIDGE QUANTITIES

TEMPORARY BRIDGE	PIER	APPROACH SLAB 1	APPROACH SLAB 2	ABUTMENT NO. 1	ABUTMENT NO. 2	SUPER-STRUCTURE	BRIDGE TOTAL	UNIT	ITEMS	ITEM NUMBER
				270	265		535	CY	UNCLASSIFIED CHANNEL EXCAVATION	203.27
				215	215		430	CY	STRUCTURE EXCAVATION	204.25
				175	165		340	CY	GRANULAR BACKFILL FOR STRUCTURES	204.30
		26	28	42	42	143	281	CY	CONCRETE, HIGH PERFORMANCE CLASS A	501.33
				42	30		72	CY	CONCRETE, HIGH PERFORMANCE CLASS B	501.34
				0.5	0.5		1	LS	FURNISHING EQUIPMENT FOR DRIVING PILING	504.10
				384	222		606	LF	STEEL PILING, HP 12 X 63	505.155
				2227			2227	SF	PERMANENT STEEL SHEET PILING (Z MIN.= 48.9 IN^3)	505.35
				1	1		2	EACH	DYNAMIC PILE LOADING TEST	505.45
						301540	301540	LB	STRUCTURAL STEEL, CURVED PLATE GIRDER	506.56
		3070	3292	2860	2390		11612	LB	REINFORCING STEEL, LEVEL I	507.11
				7616	7512	30963	46091	LB	REINFORCING STEEL, LEVEL II	507.12
						1	1	LS	SHEAR CONNECTORS (1180 - 7" x 7/8")	508.15
						550	550	SY	LONGITUDINAL DECK GROOVING	509.10
				4	4	36	44	GAL	WATER REPELLENT, SILANE	514.10
		31	32				63	LF	BRIDGE EXPANSION JOINT, ASPHALTIC PLUG	516.10
				30.5	31.5		62	LF	JOINT SEALER, HOT POURED	524.11
						299.75	299.75	LF	BRIDGE RAILING, GALVANIZED 3 RAIL BOX BEAM	525.335
1							1	LS	TWO-WAY TEMPORARY BRIDGE (3840 SF - EST.)	528.11
						1	1	EACH	REMOVAL OF STRUCTURE (5747 SF - EST.)	529.15
	105			270	265		640	CY	STONE FILL, TYPE IV	613.13
						4	4	EACH	GUARDRAIL APPROACH SECTION, GALVANIZED 3 RAIL BOX BEAM	621.725
	135			305	265		705	SY	GEOTEXTILE UNDER STONE FILL	649.31
				67	66		133	SY	GRUBBING MATERIAL	651.40
				202	169		371	SF	SPECIAL PROVISION (RETAINING WALL)	900.670

DETAILED SUMMARY OF QUANTITIES

QUANTITIES	UNIT	ITEMS

CLD 12-0120 MODEL: OS BRIDGE

CONSULTING ENGINEERS

PROJECT NAME: STOWE
PROJECT NUMBER: BRF 0235(15)

FILE NAME: z88c190qty.dgn
PROJECT LEADER: J. BYATT
DESIGNED BY: J. FRENCH
BRIDGE QUANTITY SHEET I

PLOT DATE: 5/8/2015
DRAWN BY: J. FRENCH
CHECKED BY: J. BYATT
SHEET II OF 79

GENERAL

1. ALL MATERIAL AND CONSTRUCTION SHALL CONFORM TO THE STATE OF VERMONT AGENCY OF TRANSPORTATION STANDARD SPECIFICATIONS FOR CONSTRUCTION DATED 2011, AND ITS LATEST REVISIONS, AND THE AASHTO LRFD BRIDGE DESIGN SPECIFICATIONS, DATED 2012, AND ITS LATEST REVISIONS.

2. THE BRIDGE WAS DESIGNED FOR THE HL-93 LIVE LOAD WITH 2½" FUTURE PAVEMENT.

3. ALL DIMENSIONS SHOWN IN THE PLANS ARE HORIZONTAL AND VERTICAL AND ARE GIVEN AT 68 DEGREES FAHRENHEIT, UNLESS NOTED OTHERWISE.

4. THE CONTRACTOR SHALL BE MADE AWARE THAT EXISTING UTILITIES ARE WITHIN THE CONSTRUCTION LIMITS OF BRIDGE 3. THE LOCATION OF ANY UTILITY INFORMATION SHOWN ON THE PLANS IS APPROXIMATE. NO CLAIMS ARE MADE AS TO THE ACCURACY OR COMPLETENESS OF THE UTILITIES SHOWN. THE CONTRACTOR IS SOLELY RESPONSIBLE FOR LOCATING AND PROTECTING FROM DAMAGE ALL UTILITIES ON SITE DURING ALL STAGES OF CONSTRUCTION. SEE UTILITY PLANS AND SPECIAL PROVISIONS FOR ADDITIONAL INFORMATION AND REQUIREMENTS.

5. THE REMOVAL OF THE EXISTING WATER LINE ON THE BRIDGE SHALL BE INCIDENTAL TO ITEM 529.15 - REMOVAL OF STRUCTURE.

6. ALL PG BINDER USED IN BITUMINOUS CONCRETE PAVEMENT SHALL BE IN ACCORDANCE WITH THE SPECIAL PROVISIONS.

7. EMULSIFIED ASPHALT SHALL BE APPLIED ON ALL COLD PLANED SURFACES AT THE RATE OF 0.040 GAL/SY AND BETWEEN ALL COURSES OF PAVEMENT AT THE RATE OF 0.025 GAL/SY OR AS DIRECTED BY THE ENGINEER.

8. ANY REQUIRED SAWCUT OF EXISTING PAVEMENT SHALL BE INCIDENTAL TO THE WEARING COURSE PAY ITEM.

9. THE CONTRACTOR SHALL BE RESPONSIBLE FOR REPAIRING ANY DAMAGE TO PRIVATE OR PUBLIC PROPERTY CAUSED BY THE CONTRACTOR AT THE CONTRACTOR'S EXPENSE AND TO THE SATISFACTION OF THE ENGINEER.

10. UPON COMPLETION OF THE BRIDGE CONSTRUCTION THE CONTRACTOR SHALL REMOVE THE DETOUR, RESTORE THE DETOUR SITE TO THE ORIGINAL GRADE AND STABILIZE AS SHOWN ON THE EPSC FINAL CONDITIONS PLAN.

11. SLOPE ROUNDING: ALL CUT SLOPES TO BE ROUNDED IN ACCORDANCE WITH STANDARD SHEET B-5.

12. NO WINTER WORK WILL BE ALLOWED. ALL PROVISIONS OF SUBSECTION 108.09 SHALL APPLY.

13. SHEET 79 IS INCLUDED FOR REFERENCE ONLY. ALL WORK SHOWN ON SHEET 79 WILL BE COMPLETED PRIOR TO CONSTRUCTION AND BY OTHERS.

EARTHWORK AND RELATED ITEMS

14. TEMPORARY CONSTRUCTION FILLS WITHIN THE WATERCOURSE FOR ANY PURPOSE SHALL CONSIST OF CLEAN STONE FILL ONLY. NO OTHER FILLING IN THE STREAM SHALL OCCUR WITHOUT THE APPROVAL OF THE STREAM ALTERATION ENGINEER.

15. THE "STONE FILL, TYPE IV" UNDER THE BRIDGE AS SHOWN IN THE PLANS SHALL BE PLACED BEFORE THE NEW STEEL GIRDERS ARE SET.

16. ITEM 529.15 "REMOVAL OF STRUCTURE" SHALL BE USED FOR THE REMOVAL OF THE EXISTING STRUCTURE INCLUDING THE SUPERSTRUCTURE, PIER, AND ABUTMENTS OUTSIDE THE LIMITS OF STRUCTURE EXCAVATION OR UNCLASSIFIED CHANNEL EXCAVATION. THE PIER SHALL BE REMOVED TO ELEVATION 722.0.

H-PILES

17. TO PREVENT DAMAGE TO THE PILES, PILE SHOES ARE REQUIRED AND SHALL CONFORM TO SUB-SECTION 505.04(f).

18. PILES SHALL BE DRIVEN WITHIN 3 INCHES OF THE LOCATION SHOWN ON THE PLANS. THE PILE ORIENTATION SHALL NOT VARY MORE THAN 5 DEGREES. THE CONTRACTOR SHALL DEMONSTRATE HOW THE TOLERANCE WILL BE MET TO THE SATISFACTION OF THE RESIDENT ENGINEER.

19. TO ENSURE THAT THE NOMINAL CAPACITY HAS BEEN ATTAINED AND TO PREVENT THE OVERSTRESSING OF THE PILES DURING DRIVING OPERATIONS, DYNAMIC TESTING SHALL BE PERFORMED IN ACCORDANCE WITH SUBSECTION 505.04. A MINIMUM OF ONE DYNAMIC PILE TEST SHALL BE CONDUCTED ON THE FIRST PILE DRIVEN FOR EACH SUBSTRUCTURE UNIT, FOR A TOTAL OF 2 TESTS. MORE TESTS MAY BE REQUIRED BY THE ENGINEER. ADDITIONAL TEST REQUIRED BY THE ENGINEER WILL BE PAID FOR AT THE UNIT PRICE BID FOR CONTRACT ITEM 505.45.

20. THE PILES SHALL BE DRIVEN TO A NOMINAL PILE DRIVING RESISTANCE (RNDR) OF 400 KIPS, AS DETERMINED BY THE RESULTS OF DYNAMIC TESTING, AND AS INTERPRETED BY THE RESIDENT ENGINEER. HOWEVER, THE PILES SHALL BE DRIVEN TO A MINIMUM DEPTH OF 30 FEET BELOW THE BOTTOM OF THE PILE CAP.

21. FOR ESTIMATING PURPOSES, THE PILE TIP ELEVATIONS WERE ASSUMED TO BE AS SHOWN ON THE BORING LOGS. THE ACTUAL IN PLACE LENGTH MAY VARY.

STEEL

22. THE EXISTING STRUCTURAL STEEL IS PAINTED WITH MATERIAL THAT MAY CONTAIN LEAD. THE CONTRACTOR SHALL FOLLOW ALL APPLICABLE REGULATIONS WHEN HANDLING AND WORKING WITH THIS STEEL. THE REMOVED STRUCTURAL STEEL IS THE PROPERTY OF THE CONTRACTOR. THE CONTRACTOR SHALL INDEMNIFY AND HOLD THE STATE, ITS OFFICERS, AND EMPLOYEES HARMLESS CONCERNING THE CONTRACTOR'S USE OR DISPOSITION OF THE REMOVED EXISTING STRUCTURAL STEEL.

CONCRETE

23. CONCRETE USED FOR DECK, APPROACH SLABS, END DIAPHRAGMS, AND SHEET PILE RETAINING WALL CAP SHALL BE HIGH PERFORMANCE CONCRETE CLASS A AND WILL BE PAID UNDER CONTRACT ITEM 501.33. CONCRETE USED FOR PILE CAP SHALL BE HIGH PERFORMANCE CONCRETE CLASS B. AND WILL BE PAID UNDER CONTRACT ITEM 501.34

24. WATER REPELLENT, SILANE, SHALL BE APPLIED TO ALL EXPOSED CONCRETE SURFACES, EXCEPT THE UNDERSIDE OF THE DECK BETWEEN DRIP NOTCHES.

25. ALL REINFORCING STEEL IN THE DECK AND END DIAPHRAGMS SHALL BE LEVEL II - STAINLESS CLAD OR DUAL COATED REINFORCING STEEL. REINFORCEMENT IN THE PILE CAP, APPROACH SLABS, AND SHEET PILE WALL CAP SHALL BE LEVEL I. LEVEL I EPOXY COATED REINFORCEMENT IS DESIGNATED BY AN "E" IN THE BAR MARK PREFIX.

26. ALL REINFORCING STEEL SHALL BE DETAILED AND FABRICATED USING PROCEDURES AND TOLERANCES IN ACCORDANCE WITH APPLICABLE PUBLICATIONS OF THE "CONCRETE REINFORCING INSTITUTE".

27. MINIMUM CLEAR COVER FOR REINFORCING STEEL SHALL BE AS FOLLOWS:

ALONG BACKFACES OF WALLS AGAINST EARTH:	2.0 INCH
ALONG TOP SURFACE OF DECK SLAB:	3.0 INCH
ALONG BOTTOM SURFACE OF DECK SLAB:	1.5 INCH
ELSEWHERE UNLESS OTHERWISE INDICATED:	3.0 INCH

CLD 12-0120 MODEL: GeneralNotes

CONSULTING ENGINEERS

PROJECT NAME: STOWE
PROJECT NUMBER: BRF 0235(15)

FILE NAME: z88cl90gennotes.dgn
PROJECT LEADER: J. BYATT
DESIGNED BY: J. FRENCH
PROJECT NOTES

PLOT DATE: 6/1/2015
DRAWN BY: M. SMITH
CHECKED BY: J. BYATT
SHEET 12 OF 79

GENERAL INFORMATION

SYMBOLOGY LEGEND NOTE

THE SYMBOLOGY ON THIS SHEET IS INTENDED TO COVER STANDARD CONVENTIONAL SYMBOLOGY. THE SYMBOLOGY IS USED FOR EXISTING & PROPOSED FEATURES WITH HEAVIER LINEWEIGHT, IN COMBINATION WITH PROJECT ANNOTATION, AS NOTED ON PROJECT PLAN SHEETS. THIS LEGEND SHEET COVERS THE BASICS. SYMBOLOGY ON PLANS MAY VARY, PLAN ANNOTATIONS AND NOTES SHOULD BE USED TO CLARIFY AS NEEDED.

SIGNS

N	NEW SIGN
RET	RETAIN SIGN
S	SALVAGE SIGN
R	REMOVE SIGN
R&S	REMOVE AND SALVAGE

PAVEMENT MARKINGS

YL	YELLOW LINE
WL	WHITE LINE

R.O.W. ABBREVIATIONS (CODES) & SYMBOLS

POINT	CODE	DESCRIPTION
	CH	CHANNEL EASEMENT
	CONST	CONSTRUCTION EASEMENT
	CUL	CULVERT EASEMENT
	D&C	DISCONNECT & CONNECT
	DIT	DITCH EASEMENT
	DR	DRAINAGE EASEMENT
	DRIVE	DRIVEWAY EASEMENT
	EC	EROSION CONTROL
	HWY	HIGHWAY EASEMENT
	I&M	INSTALL & MAINTAIN EASEMENT
	LAND	LANDSCAPE EASEMENT
	R&RES	REMOVE & RESET
	R&REP	REMOVE & REPLACE
	SR	SLOPE RIGHT
	UE	UTILITY EASEMENT
	(P)	PERMANENT EASEMENT
	(T)	TEMPORARY EASEMENT
■	BNDNS	BOUND SET
⧈	BNDNS	BOUND TO BE SET
●	IPNS	IRON PIN SET
◎	IPNS	IRON PIN TO BE SET
⊠	CALC	EXISTING ROW POINT
○	PROW	PROPOSED ROW POINT
[LENGTH]		LENGTH CARRIED ON NEXT SHEET

COMMON TOPOGRAPHIC POINT SYMBOLS

POINT	CODE	DESCRIPTION
	APL	BOUND APPARENT LOCATION
	BM	BENCHMARK
	BND	BOUND
	CB	CATCH BASIN
	COMB	COMBINATION POLE
	DITHR	DROP INLET THROATED DNC
	EL	ELECTRIC POWER POLE
	FPOLE	FLAGPOLE
	GASFIL	GAS FILLER
	GP	GUIDE POST
	GSO	GAS SHUT OFF
	GUY	GUY POLE
	GUYW	GUY WIRE
	GV	GATE VALUE
	H	TREE HARDWOOD
	HCTRL	CONTROL HORIZONTAL
	HVCTRL	CONTROL HORIZ. & VERTICAL
	HYD	HYDRANT
	IP	IRON PIN
	IPIPE	IRON PIPE
	LI	LIGHT - STREET OR YARD
	MB	MAILBOX
	MH	MANHOLE (MH)
	MM	MILE MARKER
	PM	PARKING METER
	PMK	PROJECT MARKER
	POST	POST STONE/WOOD
	RRSIG	RAILROAD SIGNAL
	RRSL	RAILROAD SWITCH LEVER
	S	TREE SOFTWOOD
	SAT	SATELLITE DISH
	SHRUB	SHRUB
	SIGN	SIGN
	STUMP	STUMP
	TEL	TELEPHONE POLE
	TIE	TIE
	TSIGN	SIGN W/DOUBLE POST
	VCTRL	CONTROL VERTICAL
	WELL	WELL
	WSO	WATER SHUT OFF

THESE ARE COMMON VAOT SURVEY POINT SYMBOLS FOR EXISTING FEATURES, ALSO USED FOR PROPOSED FEATURES WITH HEAVIER LINEWEIGHT, IN COMBINATION WITH PROPOSED ANNOTATION.

PROPOSED GEOMETRY CODES

CODE	DESCRIPTION
PC	POINT OF CURVATURE
PI	POINT OF INTERSECTION
CC	CENTER OF CURVE
PT	POINT OF TANGENCY
PCC	POINT OF COMPOUND CURVE
PRC	POINT OF REVERSE CURVE
POB	POINT OF BEGINNING
POE	POINT OF ENDING
STA	STATION PREFIX
AH	AHEAD STATION SUFFIX
BK	BACK STATION SUFFIX
D	CURVE DEGREE OF (100FT)
R	CURVE RADIUS OF
T	CURVE TANGENT LENGTH
L	CURVE LENGTH OF
E	CURVE EXTERNAL DISTANCE

UTILITY SYMBOLOGY

UNDERGROUND UTILITIES

- UTILITY (GENERIC-UNKNOWN)
- UT — TELEPHONE
- UE — ELECTRIC
- UC — CABLE (TV)
- UEC — ELECTRIC+CABLE
- UET — ELECTRIC+TELEPHONE
- UCT — CABLE+TELEPHONE
- UECT — ELECTRIC+CABLE+TELEP.
- G — GAS LINE
- W — WATER LINE
- S — SANITARY SEWER (SEPTIC)

ABOVE GROUND UTILITIES (AERIAL)

- UTILITY (GENERIC-UNKNOWN)
- T — TELEPHONE
- E — ELECTRIC
- C — CABLE (TV)
- EC — ELECTRIC+CABLE
- ET — ELECTRIC+TELEPHONE
- AER E&T — ELECTRIC+TELEPHONE
- CT — CABLE+TELEPHONE
- ECT — ELECTRIC+CABLE+TELEP.
- UTILITY POLE GUY WIRE

PROJECT CONSTRUCTION SYMBOLOGY

PROJECT DESIGN & LAYOUT SYMBOLOGY

- CZ — CLEAR ZONE
- PLAN LAYOUT MATCHLINE

PROJECT CONSTRUCTION FEATURES

- TOP OF CUT SLOPE
- TOE OF FILL SLOPE
- STONE FILL
- BOTTOM OF DITCH ℄
- CULVERT PROPOSED
- STRUCTURE SUBSURFACE
- PDF — PDF — PROJECT DEMARCATION FENCE
- BF — BF — BARRIER FENCE
- TREE PROTECTION ZONE (TPZ)
- STRIPING LINE REMOVAL
- SHEET PILES

CONVENTIONAL BOUNDARY SYMBOLOGY

BOUNDARY LINES

- TOWN LINE — TOWN BOUNDARY LINE
- COUNTY LINE — COUNTY BOUNDARY LINE
- STATE LINE — STATE BOUNDARY LINE
- PROPOSED STATE R.O.W. (LIMITED ACCESS)
- PROPOSED STATE R.O.W.
- STATE ROW (LIMITED ACCESS)
- STATE ROW
- TOWN ROW
- PERMANENT EASEMENT LINE (P)
- TEMPORARY EASEMENT LINE (T)
- SURVEY LINE
- P/L — P/L — PROPERTY LINE (P/L)
- SR SR SR — SLOPE RIGHTS
- 6F — 6F — 6F PROPERTY BOUNDARY
- 4F — 4F — 4F PROPERTY BOUNDARY
- HAZ — HAZ — HAZARDOUS WASTE

EPSC LAYOUT PLAN SYMBOLOGY

EPSC MEASURES

- FILTER CURTAIN
- SILT FENCE
- SILT FENCE WOVEN WIRE
- CHECK DAM
- DISTURBED AREAS REQUIRING RE-VEGETATION
- EROSION MATTING

ENVIRONMENTAL RESOURCES

- WETLAND BOUNDARY
- RIPARIAN BUFFER ZONE
- WETLAND BUFFER ZONE
- SOIL TYPE BOUNDARY
- T&E — THREATENED & ENDANGERED SPECIES
- HAZ — HAZ — HAZARDOUS WASTE AREA
- AG — AGRICULTURAL LAND
- HABITAT — FISH & WILDLIFE HABITAT
- FLOOD PLAIN — FLOOD PLAIN
- OHW — ORDINARY HIGH WATER (OHW)
- STORM WATER
- USDA FOREST SERVICE LANDS
- WILDLIFE HABITAT SUIT/CONN

ARCHEOLOGICAL & HISTORIC

- ARCH — ARCHEOLOGICAL BOUNDARY
- HISTORIC DIST — HISTORIC DISTRICT BOUNDARY
- HISTORIC — HISTORIC AREA
- (H) HISTORIC STRUCTURE

CONVENTIONAL TOPOGRAPHIC SYMBOLOGY

EXISTING FEATURES

- ROAD EDGE PAVEMENT
- ROAD EDGE GRAVEL
- DRIVEWAY EDGE
- DITCH
- FOUNDATION
- FENCE (EXISTING)
- FENCE WOOD POST
- FENCE STEEL POST
- GARDEN
- ROAD GUARDRAIL
- RAILROAD TRACKS
- CULVERT (EXISTING)
- STONE WALL
- WALL
- WOOD LINE
- BRUSH LINE
- HEDGE
- BODY OF WATER EDGE
- LEDGE EXPOSED

CLD 12-0120 MODEL: LEGEND

CONSULTING ENGINEERS

PROJECT NAME:	STOWE
PROJECT NUMBER:	BRF 0235(15)
FILE NAME: z88cl90legend.dgn	PLOT DATE: 5/8/2015
PROJECT LEADER: J. BYATT	DRAWN BY: K. RUTTER
DESIGNED BY: K. RUTTER	CHECKED BY: C. GREGORY
CONVENTIONAL SYMBOLOGY LEGEND SHEET	SHEET 13 OF 79

GPS CONTROL POINTS

HVCTRL #1

COTTAGE

NORTH = 720366.318
EAST = 1583870.117
ELEV. = 766.304

DESCRIBED BY VERMONT AGENCY OF TRANSPORTATION 1996 (DJM)
GENERAL LOCATION - THE STATION IS LOCATED IN THE TOWN OF STOWE, 1.6 MI (2.6 KM) NORTHWEST OF STOWE VILLAGE, 8.2 MI (13.2 KM) SOUTHWEST OF MORRISVILLE, AND 9.9 MI (15.9 KM) NORTH NORTHEAST OF WATERBURY. TO REACH FROM THE JUNCTION OF VERMONT ROUTE 100 AND VERMONT ROUTE 108 IN STOWE VILLAGE, PROCEED NORTHERLY ALONG ROUTE 108 FOR 2.0 MI (3.2 KM) TO COTTAGE CLUB ROAD (TH 29) ON THE RIGHT. PROCEED NORTHEASTERLY ALONG COTTAGE CLUB ROAD FOR 0.1 MI (0.2 KM) TO THE MARK ON THE RIGHT. THE MARK IS A STATE OF VERMONT SURVEY DISK SET IN THE TOP OF A CONCRETE MONUMENT 30 CM IN DIAMETER, FLUSH WITH THE GROUND SURFACE. IT IS LOCATED 128 FT (39.0 M) NORTHEAST OF UTILITY POLE 1, 88.5 FT (27.0 M) SOUTHWEST OF UTILITY POLE 3, 36 FT (11.0 M) SOUTHEAST OF A CHAINLINK FENCE, 18.5 FT (5.6 M) SOUTHEAST OF THE CENTERLINE OF COTTAGE CLUB ROAD (TH 29) , AND 3 FT (0.9 M) NORTHWEST OF A FIBERGLASS WITNESS POST. OWNERSHIP IS THE TOWN OF STOWE.

HVCTRL #2

VILLAGE GREEN

NORTH = 720026.656
EAST = 1585800.072
ELEV. = 750.852

DESCRIBED BY VERMONT AGENCY OF TRANSPORTATION 1996 (DJM)
GENERAL LOCATION - THE STATION IS LOCATED IN THE TOWN OF STOWE, 1.2 MI (1.9 KM) NORTHWEST OF STOWE VILLAGE, 8.1 MI (13.0 KM) SOUTHWEST OF MORRISVILLE, AND 9.8 MI (15.8 KM) NORTH NORTHEAST OF WATERBURY. TO REACH FROM THE JUNCTION OF VERMONT ROUTE 100 AND VERMONT ROUTE 108 IN STOWE VILLAGE, PROCEED NORTHERLY ALONG ROUTE 108 FOR 1.7 MI (2.7 KM) TO CAPE COD ROAD (TH 31) ON THE RIGHT. TURN RIGHT AND GO NORTHEAST ALONG CAPE COD ROAD FOR 0.15 MI (0.24 KM) TO THE MARK ON THE RIGHT. THE MARK IS A STATE OF VERMONT SURVEY DISK SET IN THE TOP OF A CONCRETE MONUMENT 30 CM IN DIAMETER FLUSH WITH THE GROUND SURFACE. IT IS LOCATED 176.5 FT (53.8 M) SOUTHWEST OF THE CENTERLINE OF A PAVED DRIVE TO VILLAGE GREEN CONDOMINIUMS, 66.5 FT (20.3 M) NORTHEAST OF UTILITY POLE 3, 31.5 FT (9.6 M) NORTH OF A HIGHWAY SIGN (SPEED LIMIT 35) , 14.5 FT (4.4 M) SOUTHEAST OF THE CENTERLINE OF CAPE COD ROAD (TH 31) , AND 1 FT (0.3 M) WEST OF A FIBERGLASS WITNESS POST. OWNERSHIP IS THE STATE OF VERMONT.

TRAVERSE TIES

HVCTRL #3

NORTH = 718966.310
EAST = 1586568.514
ELEV. = 745.795

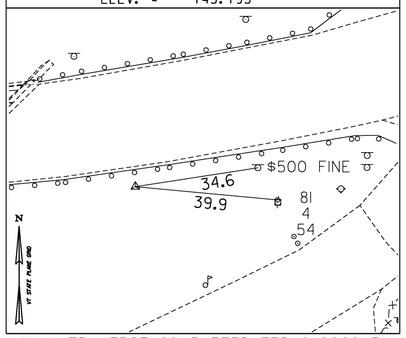

HVCTRL #4

NORTH = 719244.738
EAST = 1587011.060
ELEV. = 734.881

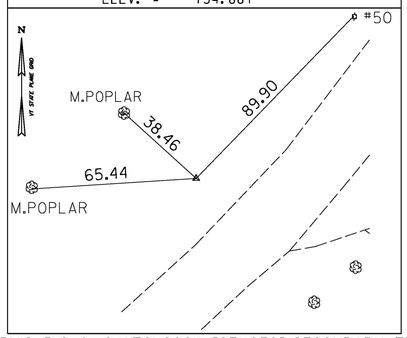

HVCTRL #5

NORTH = 719726.269
EAST = 1587327.249
ELEV. = 735.122

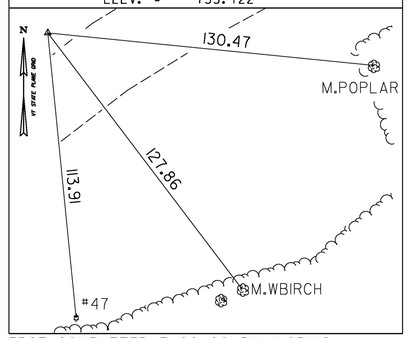

HVCTRL #10

NORTH = 719070.220
EAST = 1586004.621
ELEV. = 743.799

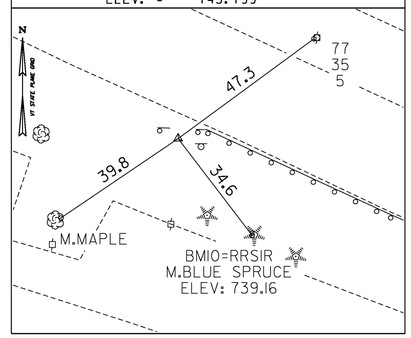

HVCTRL #11

NORTH = 719380.602
EAST = 1585477.025
ELEV. = 753.092

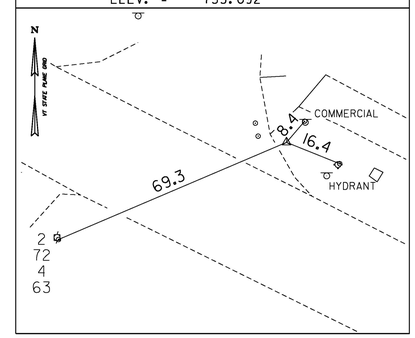

* MAIN TRAVERSE COMPLETED FEB. 8 2000 BY L.ORVIS P.C. & G.HITCHCOCK [93b059] SECONDARY TRAVERSE COMPLETED 7/20/2011 BY L.ORVIS

ALIGNMENT TIES

POB STA 10+00.00

NORTH = 719142.105
EAST = 1585899.792

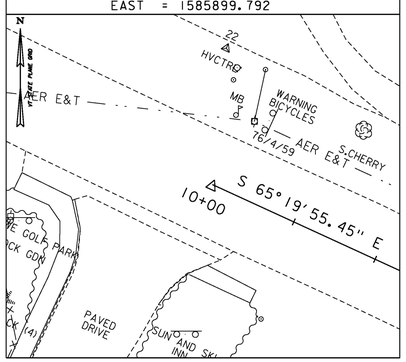

PC STA 12+24.49

NORTH = 719048.411
EAST = 1586103.799

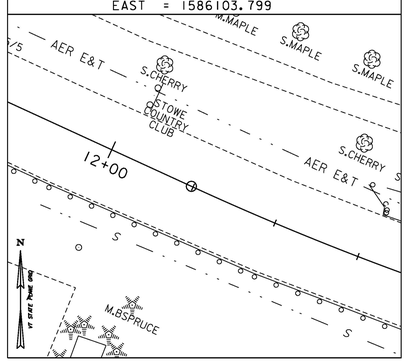

PCC STA 19+03.41

NORTH = 719044.316
EAST = 1586762.719

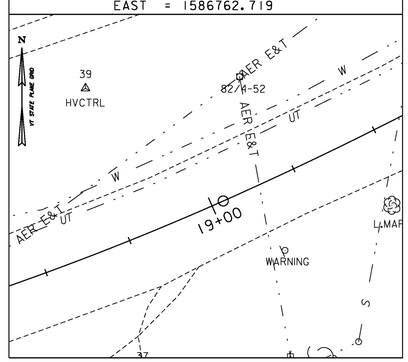

PT STA 22+12.98

NORTH = 719210.509
EAST = 1587022.297

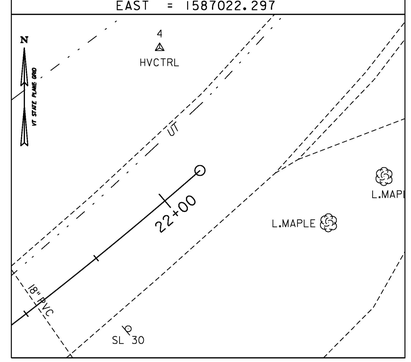

DATUM

VERTICAL NAVD 88
HORIZONTAL NAD 83(96)
ADJUSTMENT COMPASS

CLD 12-0120 MODEL: TIE01

PROJECT NAME: STOWE
PROJECT NUMBER: BRF 0235(15)

FILE NAME: z88cl90t1.dgn
PROJECT LEADER: J. BYATT
DESIGNED BY: K. RUTTER
TIE SHEET 1

PLOT DATE: 5/8/2015
DRAWN BY: K. RUTTER
CHECKED BY: C. GREGORY
SHEET 14 OF 79

CONSULTING ENGINEERS

ALIGNMENT TIES

POB STA 40+00.00
NORTH = 718838.694
EAST = 1586428.223

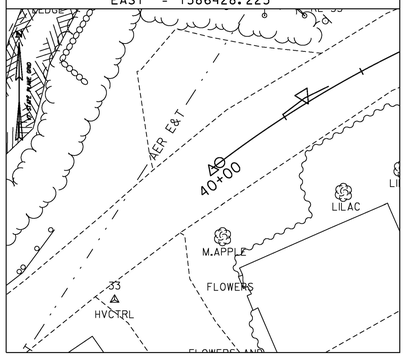

PC STA 40+02.85
NORTH = 718840.421
EAST = 1586430.493

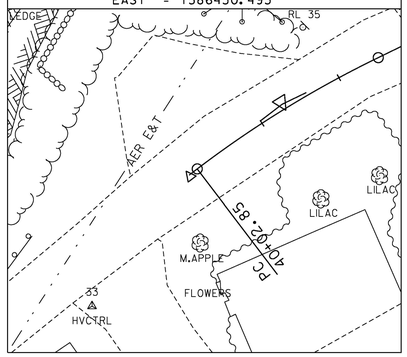

PT STA 40+62.34
NORTH = 718871.520
EAST = 1586481.088

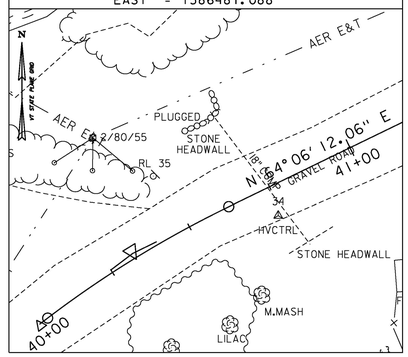

PC STA 41+90.51
NORTH = 718927.500
EAST = 1586596.393

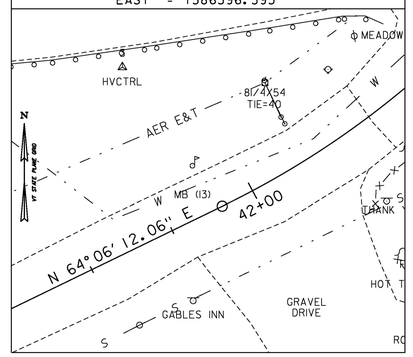

PT STA 42+50.07
NORTH = 718959.619
EAST = 1586646.381

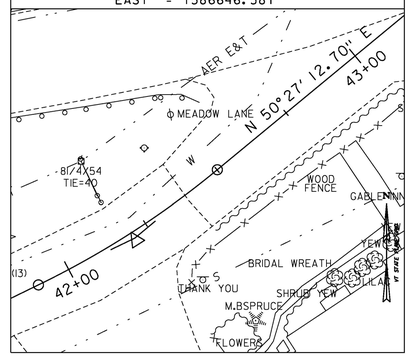

ALIGNMENT TIES

POB STA 100+00.00
NORTH = 719058.633
EAST = 1586081.541

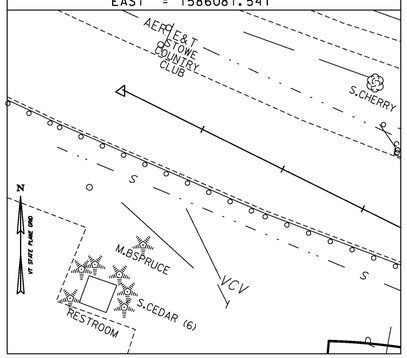

PC STA 102+18.00
NORTH = 718961.750
EAST = 1586276.827

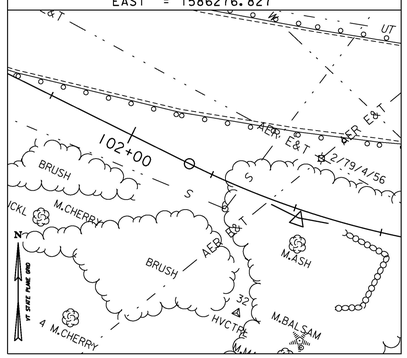

PT STA 102+85.62
NORTH = 718940.385
EAST = 1586340.757

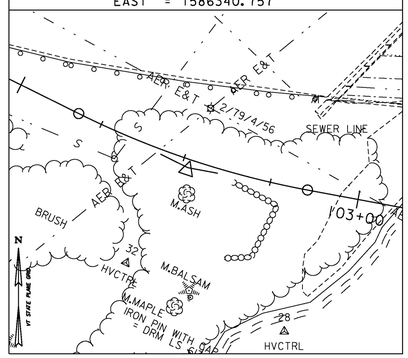

PC STA 104+04.17
NORTH = 718918.632
EAST = 1586457.298

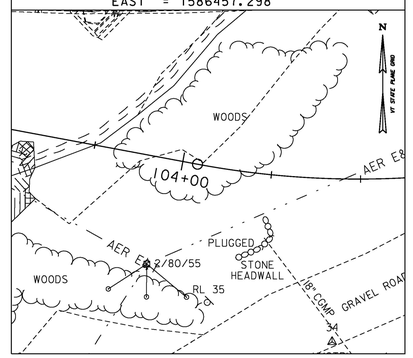

PT STA 106+16.60
NORTH = 718969.358
EAST = 1586656.787

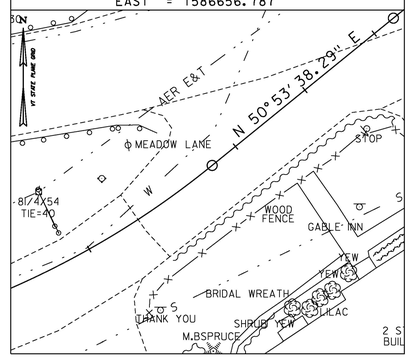

PC STA 106+81.87
NORTH = 719010.530
EAST = 1586707.438

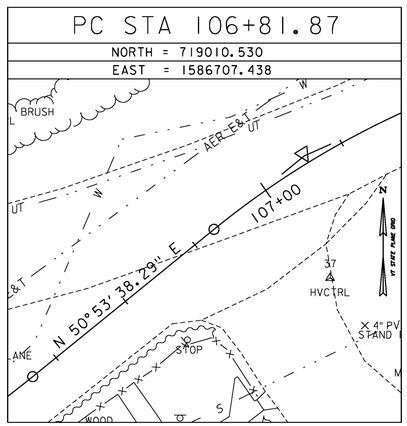

PRC STA 107+46.66
NORTH = 719044.311
EAST = 1586762.499

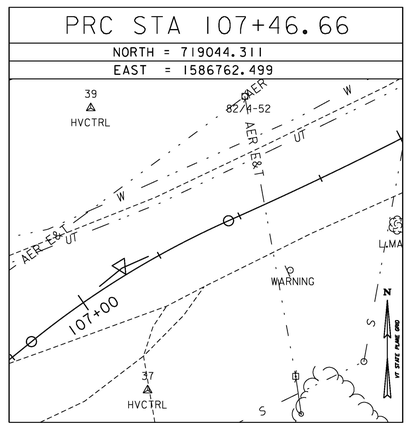

DATUM

VERTICAL	NAVD 88
HORIZONTAL	NAD 83(96)
ADJUSTMENT	COMPASS

PROJECT NAME: STOWE
PROJECT NUMBER: BRF 0235(15)

FILE NAME: z88c1901t1.dgn
PROJECT LEADER: J. BYATT
DESIGNED BY: K. RUTTER
TIE SHEET 2

PLOT DATE: 5/8/2015
DRAWN BY: K. RUTTER
CHECKED BY: C. GREGORY
SHEET 15 OF 79

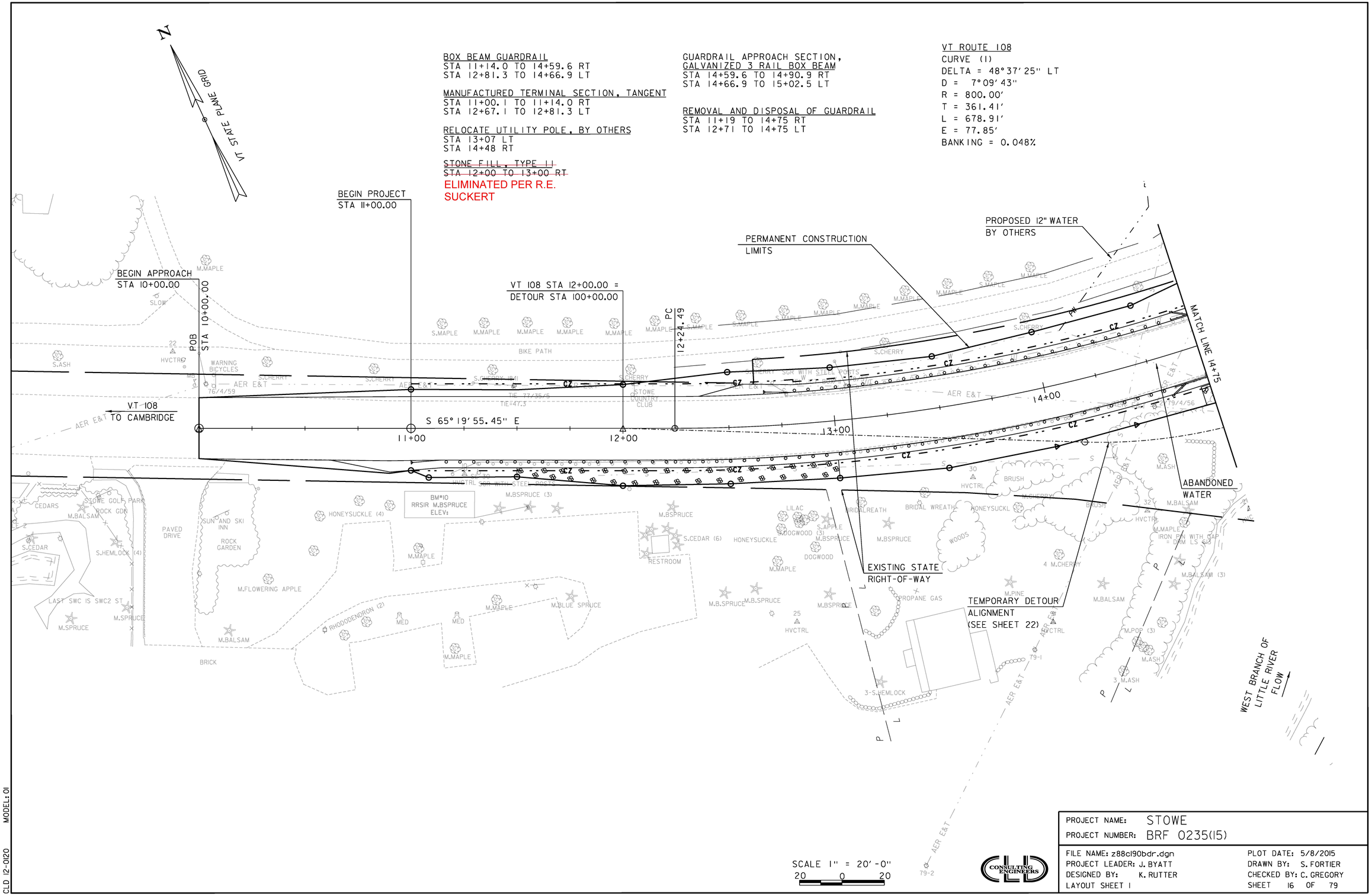

PROJECT NAME: STOWE	
PROJECT NUMBER: BRF 0235(15)	
FILE NAME: z88c190bdr.dgn	PLOT DATE: 5/8/2015
PROJECT LEADER: J. BYATT	DRAWN BY: S. FORTIER
DESIGNED BY: K. RUTTER	CHECKED BY: C. GREGORY
LAYOUT SHEET 1	SHEET 16 OF 79

CLD 12-0120 MODEL: 01

N

VT STATE PLANE GRID

BOX BEAM GUARDRAIL
STA 16+71.9 TO 17+01.3 RT
STA 16+88.4 TO 18+90.1 LT

MANUFACTURED TERMINAL SECTION, TANGENT
STA 17+01.3 TO 17+15.0 RT
STA 18+90.1 TO 19+04.4 LT

GUARDRAIL APPROACH SECTION, GALVANIZED 3 RAIL BOX BEAM
STA 16+40.5 TO 16+71.9 RT
STA 16+52.7 TO 16+88.4 LT

BRIDGE RAILING, GALVANIZED 3 RAIL BOX BEAM
STA 14+90.9 TO 16+40.5 RT
STA 15+02.5 TO 16+52.7 LT

REMOVAL AND DISPOSAL OF GUARDRAIL
STA 14+75 TO 14+79 RT
STA 14+75 TO 15+01 LT
STA 16+41 TO 17+69 RT
STA 16+75 TO 17+62 LT

CONSTRUCT DRIVES WITH 5' PAVED APRON
STA 41+70 TO 42+32 RT (18" GRAVEL)
STA 18+19 TO 18+85 RT (18" GRAVEL)

STONE FILL, TYPE II
STA 40+46.3 LT (MEADOW LANE)

VT ROUTE 108
CURVE (2)
DELTA = 17°18'17" LT
D = 5°35'23"
R = 1025.00'
T = 155.97'
L = 309.57'
E = 11.80'
BANKING = 0.042

VT108 STA 15+50.00 =
CHANNEL STA 52+00.00
Δ = 50°00'00"
(TANGENT TO CURVE)

BEGIN BRIDGE
STA 14+98.20

CHANNEL
STA 53+50.00

WEST BRANCH OF LITTLE RIVER

PROPOSED 12" WATER
BY OTHERS

EXISTING TOWN
RIGHT-OF-WAY

PERMANENT CONSTRUCTION
LIMITS

END BRIDGE
STA 16+45.00

ABANDONED
WATER

REMOVE
18" CGMP

LIMIT OF WORK
STA 40+45.00

CHANNEL
STA 50+75.00

CHANNEL LINE
N 41°21' 18.84" E

MATCH LINE 14+75

MEADOW LANE
(TH 38)

EXISTING TOWN
RIGHT-OF-WAY

EXISTING STATE
RIGHT-OF-WAY

TEMPORARY DETOUR
ALIGNMENT (SEE SHEET 22)

N 64°06'12.06" E

N 50°27'12.70" E

VT 108 STA 20+36.73 =
DETOUR STA 108+80.00

EXISTING STATE
RIGHT-OF-WAY

END APPROACH
STA 21+00.00

VT 108
TO STOWE VILLAGE

END PROJECT
STA 20+00.00

P1 VT 108 20+59.28
P1 DETOUR 109+02.64

STA 18+73.32 VT 108 =
STA 43+64.73 MEADOW LANE

MEADOW LANE
CURVE (2)
DELTA = 13°38'59" LT
D = 22°55'06"
R = 250.00'
T = 29.92'
L = 59.56'
E = 1.78'

EXISTING BRIDGE DATA

168'-0" TWO SPAN STEEL GIRDER
26'-8" CURB TO CURB
20' +/- VERTICAL CLEARANCE TO STREAM BED
BUILT IN 1938

MEADOW LANE
CURVE (1)
DELTA = 11°21'40" RT
D = 19°05'55"
R = 300.00'
T = 29.84'
L = 59.49'
E = 1.48'

18" x 60' CPEP(SL) WAS INSTALLED WITH NO HEADWALL AT INLET OR END SECTION AND STONE PAD AT OUTLET. APPROVED BY TOWN OF STOWE.

SCALE 1" = 20'-0"
20 0 20

CONSULTING ENGINEERS

PROJECT NAME: STOWE	
PROJECT NUMBER: BRF 0235(15)	
FILE NAME: z88cl90bdr.dgn	PLOT DATE: 5/8/2015
PROJECT LEADER: J. BYATT	DRAWN BY: K. RUTTER
DESIGNED BY: K. RUTTER	CHECKED BY: C. GREGORY
LAYOUT SHEET 2	SHEET 17 OF 79

CLD 12-0120 MODEL: 02

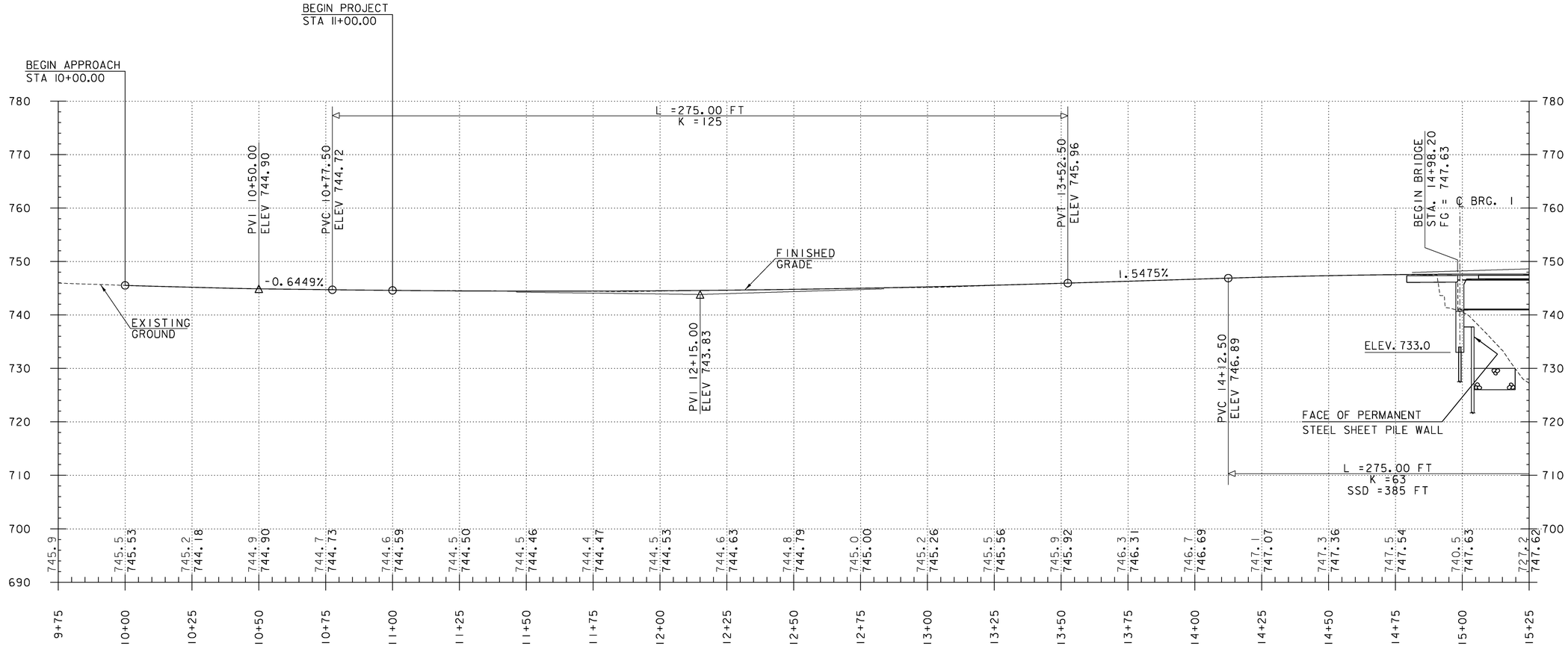

PROFILE VT 108

HOR. SCALE 1" = 20'-0"
VER. SCALE 1" = 10'-0"

NOTES:
GRADES SHOWN TO THE NEAREST TENTH ARE EXISTING GROUND ALONG THE PROPOSED CENTER LINE.

GRADES SHOWN TO THE NEAREST HUNDREDTH ARE FINISHED GRADE ALONG THE PROPOSED CENTER LINE.

CLD 12-020 MODEL: VT108 PRO 01

CLD CONSULTING ENGINEERS

PROJECT NAME: STOWE	
PROJECT NUMBER: BRF 0235(15)	
FILE NAME: z88cl90pro.dgn	PLOT DATE: 5/8/2015
PROJECT LEADER: J. BYATT	DRAWN BY: S. FORTIER
DESIGNED BY: K. RUTTER	CHECKED BY: C. GREGORY
VT 108 PROFILE SHEET 1	SHEET 18 OF 79

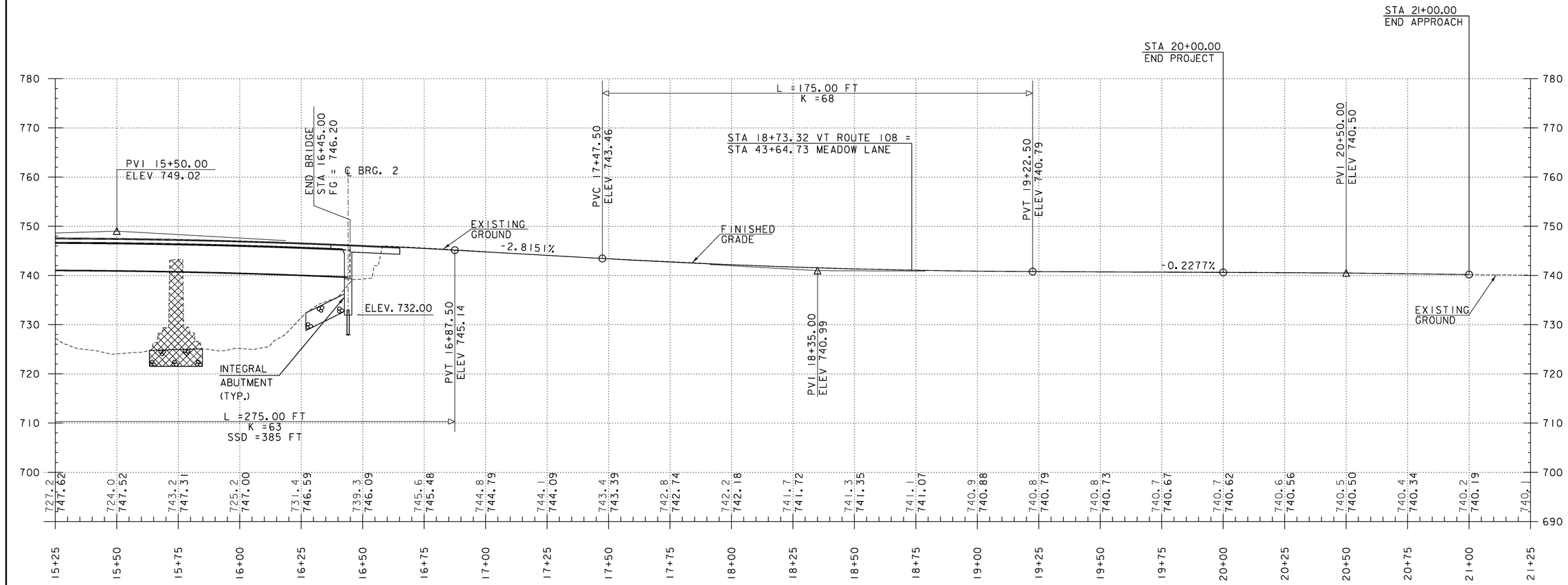

PROFILE VT 108

HOR. SCALE 1" = 20'-0"
VER. SCALE 1" = 10'-0"

NOTES:
GRADES SHOWN TO THE NEAREST TENTH ARE EXISTING GROUND ALONG THE PROPOSED CENTER LINE.

GRADES SHOWN TO THE NEAREST HUNDREDTH ARE FINISHED GRADE ALONG THE PROPOSED CENTER LINE.

CLD 12-020 MODEL: VT108 PRO 02

PROJECT NAME:	STOWE
PROJECT NUMBER:	BRF 0235(15)
FILE NAME: z88cl90pro.dgn	PLOT DATE: 5/8/2015
PROJECT LEADER: J. BYATT	DRAWN BY: S. FORTIER
DESIGNED BY: K. RUTTER	CHECKED BY: C. GREGORY
VT 108 PROFILE SHEET 2	SHEET 19 OF 79

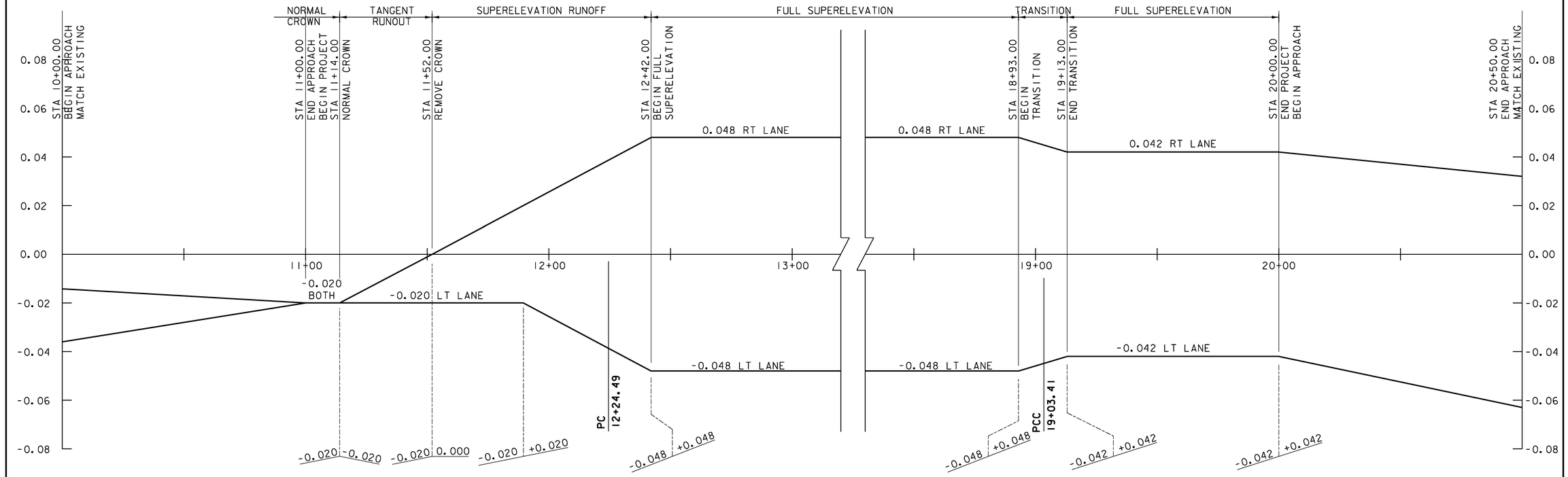

VT 108 BANKING DIAGRAM

HOR. SCALE 1" = 20'-0"
VER. SCALE 1" = .02'

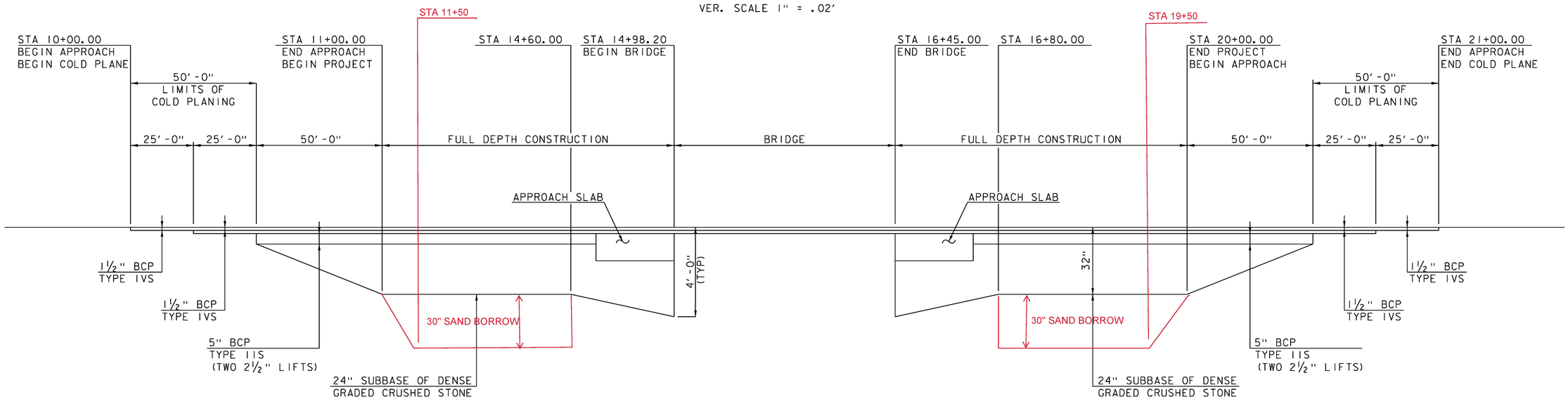

VT 108 MATERIAL TRANSITION DIAGRAM

NOT TO SCALE

REVISED MATERIAL TRANSITION DETAIL TO INCORPORATE SAND BORROW TAPER.

CONSULTING ENGINEERS

PROJECT NAME:	STOWE
PROJECT NUMBER:	BRF 0235(15)
FILE NAME: z88cl90bank.dgn	PLOT DATE: 5/8/2015
PROJECT LEADER: J. BYATT	DRAWN BY: K. RUTTER
DESIGNED BY: K. RUTTER	CHECKED BY: C. GREGORY
MATERIAL TRANSITION & BANKING DIAGRAM	SHEET 20 OF 79

CLD 12-0120 MODEL: 01

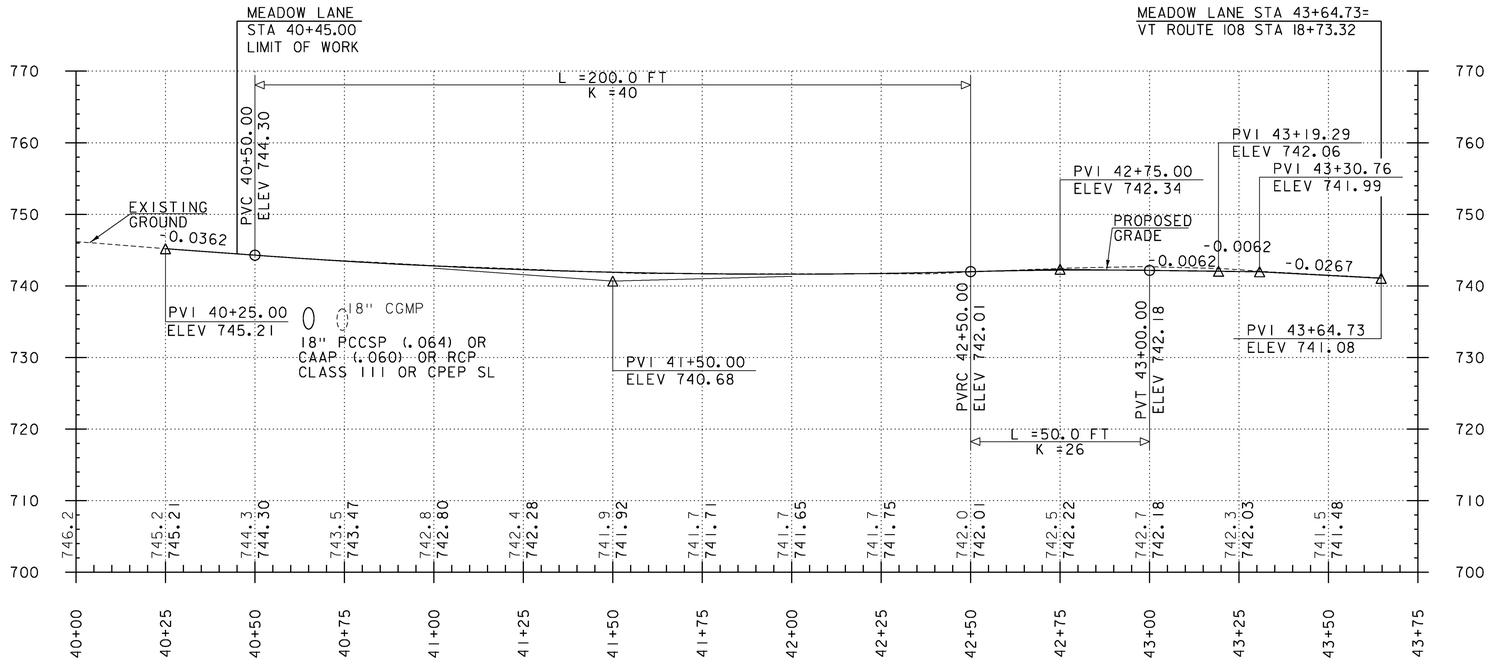

PROFILE MEADOW LANE

HOR. SCALE 1" = 20'-0"
VER. SCALE 1" = 10'-0"

NOTES:
GRADES SHOWN TO THE NEAREST TENTH ARE EXISTING GROUND ALONG THE PROPOSED CENTER LINE.

GRADES SHOWN TO THE NEAREST HUNDREDTH ARE FINISHED GRADE ALONG THE PROPOSED CENTER LINE.

CLD 12-0120 MODEL: MEADOW LANE PRO

PROJECT NAME: STOWE	
PROJECT NUMBER: BRF 0235(15)	
FILE NAME: z88cl90proMeadow.dgn	PLOT DATE: 5/8/2015
PROJECT LEADER: J. BYATT	DRAWN BY: S. FORTIER
DESIGNED BY: K. RUTTER	CHECKED BY: C. GREGORY
MEADOW LANE PROFILE SHEET	SHEET 21 OF 79

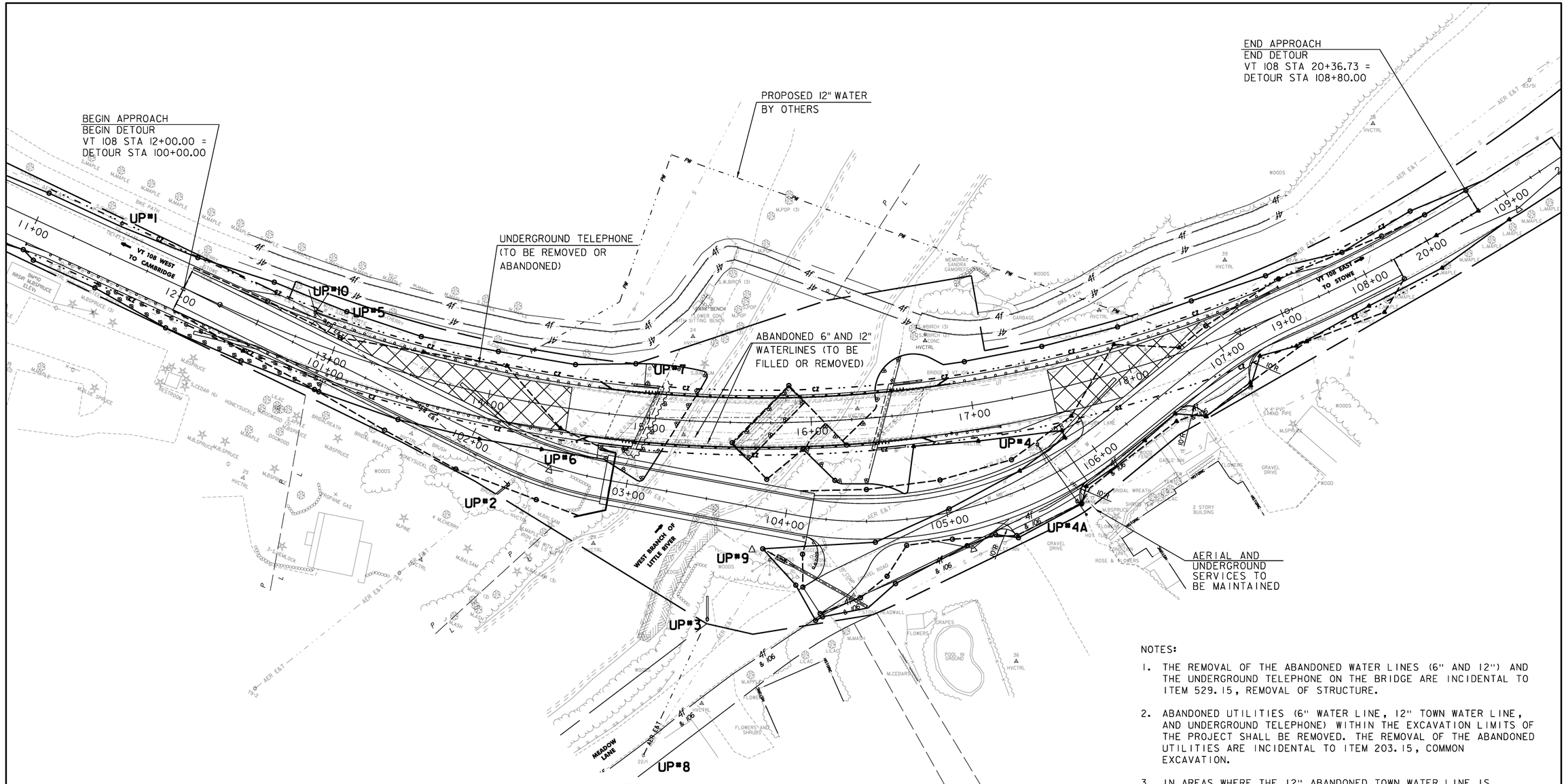

MARK	STATION	OFFSET	NORTHING	EASTING	PHASE (PRE-CONSTRUCTION/FINAL)	REMARKS	POLE NUMBER
UP#1	11+49	20' LT	719098.43	1586043.40	PRE-CONSTRUCTION	REPLACE WITH TALLER UTILITY POLE. CONNECT LINES TO UP#10.	77/35/5
UP#2	14+22	53' RT	718937.17	1586281.65	PRE-CONSTRUCTION	INSTALL NEW UTILITY POLE WITH PUSH BRACE. CONNECT LINES TO UP#10.	NEW
UP#3	15+40	122' RT	718853.95	1586404.61	PRE-CONSTRUCTION	INSTALL NEW UTILITY POLE WITH PUSH BRACE. CONNECT LINES TO UP#2, UP#4 AND UP#8.	NEW
UP#4	17+34	31' RT	EXISTING	EXISTING	PRE-CONSTRUCTION	CLEAN GUY WIRES TO FIT. CONNECT LINES TO UP#3.	81/4/54
UP#4A	17+50	70.6'RT	718926.90	1586632.88	PRE-CONSTRUCTION	INSTALL TEMPORARY UTILITY POLE AND 10' GUY. CONNECT TO UP #4.	TEMP.
					FINAL	REMOVE TEMPORARY POLE AND GUY.	
UP#5	13+07	16' LT	EXISTING	EXISTING	PRE-CONSTRUCTION	REMOVE EXISTING UTILITY POLE AND LINES	78/57
UP#6	14+47	22' RT	EXISTING	EXISTING	PRE-CONSTRUCTION	REMOVE EXISTING UTILITY POLE AND LINES	2/79/4/56
UP#7	14+97	30' LT	EXISTING	EXISTING	PRE-CONSTRUCTION	REMOVE EXISTING UTILITY POLE AND LINES	9S
UP#8	15+11	208' RT	EXISTING	EXISTING	PRE-CONSTRUCTION	CONNECT LINES TO UP#3.	22/1
UP#9	15+74	85' RT	EXISTING	EXISTING	PRE-CONSTRUCTION	REMOVE EXISTING UTILITY POLE AND LINES	2/80/55
UP#10	12+82	18' RT	719043.33	1586162.75	FINAL	INSTALL NEW UTILITY POLE, 2 DEAD ENDS AND 14' GUY. CONNECT LINES TO UP#1 AND UP#2.	NEW

NOTES:

1. THE REMOVAL OF THE ABANDONED WATER LINES (6" AND 12") AND THE UNDERGROUND TELEPHONE ON THE BRIDGE ARE INCIDENTAL TO ITEM 529.15, REMOVAL OF STRUCTURE.
2. ABANDONED UTILITIES (6" WATER LINE, 12" TOWN WATER LINE, AND UNDERGROUND TELEPHONE) WITHIN THE EXCAVATION LIMITS OF THE PROJECT SHALL BE REMOVED. THE REMOVAL OF THE ABANDONED UTILITIES ARE INCIDENTAL TO ITEM 203.15, COMMON EXCAVATION.
3. IN AREAS WHERE THE 12" ABANDONED TOWN WATER LINE IS OUTSIDE OF THE EXACATION LIMITS, THE PIPE SHALL BE FILLED WITH CONTROLLED DENSITY (FLOWABLE) FILL, ITEM 541.45.
4. IN AREAS WHERE THE 6" ABANDONED WATER LINE IS OUTSIDE OF THE EXCAVATION LIMITS THE LINE SHALL BE ABANDONED IN PLACE.
5. IN AREAS WHERE THE UNDERGROUND TELEPHONE IS OUTSIDE OF THE EXCAVATION LIMITS, THE LINE SHALL BE ABANDONED IN PLACE.
6. SEE SHEET 79 FOR THE RELOCATED 12" TOWN WATER MAIN.

SCALE 1" = 30'-0"
30 0 30

CONSULTING ENGINEERS

PROJECT NAME: STOWE
PROJECT NUMBER: BRF 0235(15)

FILE NAME: z88cl90bdrutl.dgn
PROJECT LEADER: J. BYATT
DESIGNED BY: K. RUTTER
UTILITY RELOCATION SHEET

PLOT DATE: 5/8/2015
DRAWN BY: K. RUTTER
CHECKED BY: C. GREGORY
SHEET 22 OF 79

CLD 12-0120 MODEL: 01

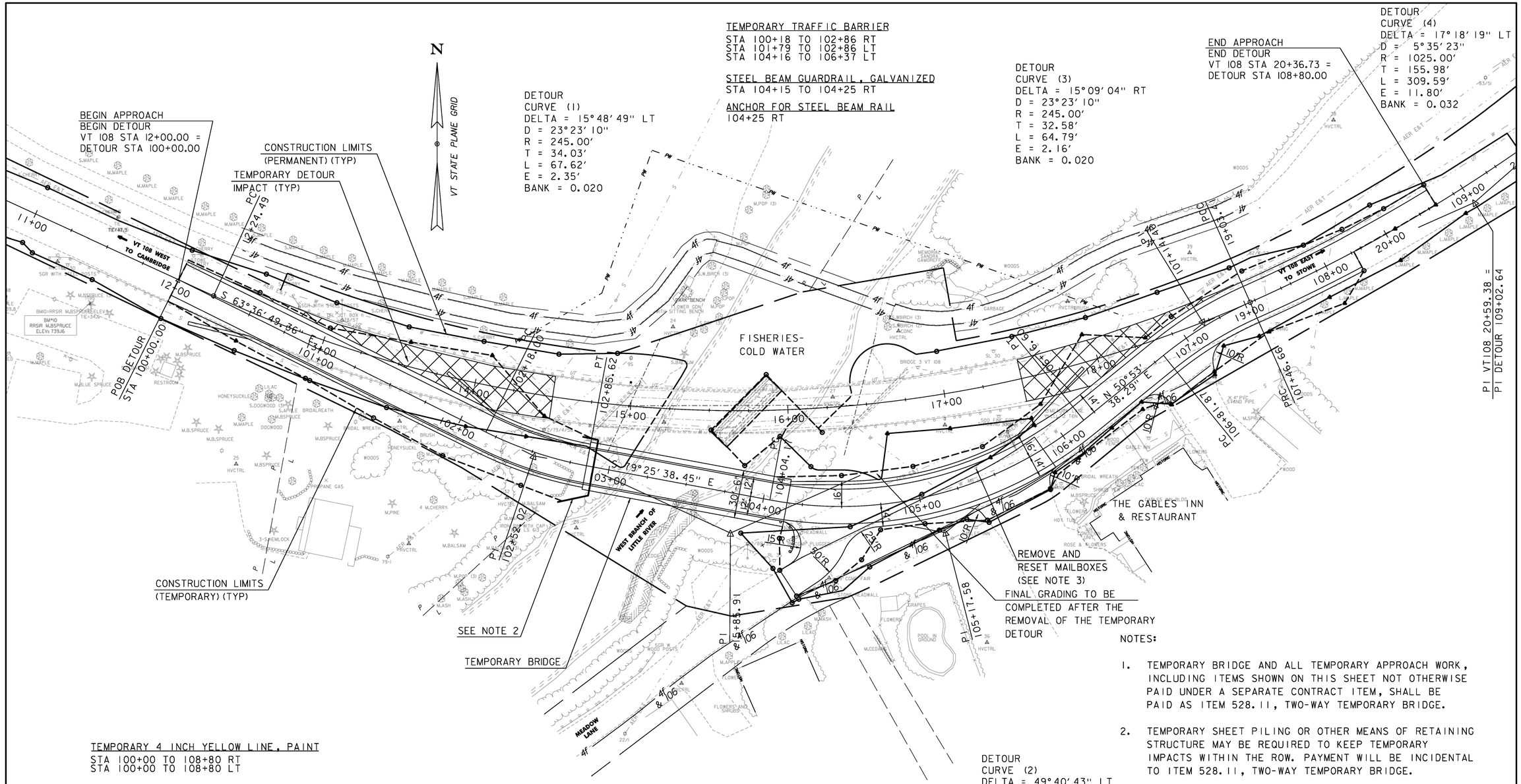

TEMPORARY 4 INCH YELLOW LINE, PAINT
STA 100+00 TO 108+80 RT
STA 100+00 TO 108+80 LT

TEMPORARY 4 INCH WHITE LINE, PAINT
STA 100+00 TO 108+20 RT
STA 100+00 TO 108+80 LT

CONSTRUCT DRIVES WITH AGGREGATE SURFACE COURSE
STA 105+25 TO 105+87 RT (18" GRAVEL)
STA 106+56 TO 107+22 RT (18" GRAVEL)

NOTES:

1. TEMPORARY BRIDGE AND ALL TEMPORARY APPROACH WORK, INCLUDING ITEMS SHOWN ON THIS SHEET NOT OTHERWISE PAID UNDER A SEPARATE CONTRACT ITEM, SHALL BE PAID AS ITEM 528.11, TWO-WAY TEMPORARY BRIDGE.

2. TEMPORARY SHEET PILING OR OTHER MEANS OF RETAINING STRUCTURE MAY BE REQUIRED TO KEEP TEMPORARY IMPACTS WITHIN THE ROW. PAYMENT WILL BE INCIDENTAL TO ITEM 528.11, TWO-WAY TEMPORARY BRIDGE.

3. TEMPORARILY RELOCATE THE MAILBOXES LOCATED AT APPROXIMATELY STA. 105+40, LEFT TO MEADOW LANE AT APPROXIMATELY STA. 40+20, LEFT OR AS DIRECTED BY THE ENGINEER, WHILE THE TEMPORARY DETOUR IS IN PLACE. ONCE THE DETOUR IS REMOVED THE MAILBOXES SHALL BE RESET IN THEIR ORIGINAL LOCATION. THIS WORK SHALL BE INCIDENTAL TO ITEM 528.11, TWO-WAY TEMPORARY BRIDGE.

SCALE 1" = 30'-0"
30 0 30

CONSULTING ENGINEERS

PROJECT NAME:	STOWE
PROJECT NUMBER:	BRF 0235(15)
FILE NAME: z88c190bdrtcp.dgn	PLOT DATE: 6/1/2015
PROJECT LEADER: J. BYATT	DRAWN BY: K. RUTTER
DESIGNED BY: K. RUTTER	CHECKED BY: C. GREGORY
TRAFFIC CONTROL SHEET	SHEET 23 OF 79

CLD 12-0120 MODEL: 01

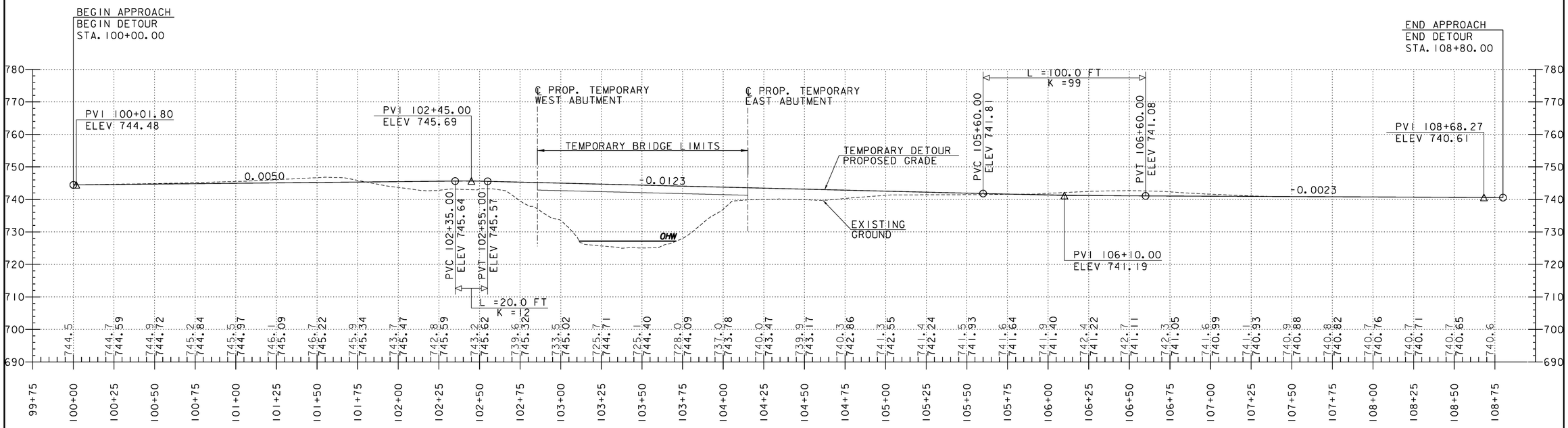

PROFILE VT108 TEMPORARY DETOUR

HOR. SCALE 1" = 30'-0"
VER. SCALE 1" = 15'-0"

NOTES:
GRADES SHOWN TO THE NEAREST TENTH ARE EXISTING GROUND ALONG THE PROPOSED CENTER LINE.

GRADES SHOWN TO THE NEAREST HUNDREDTH ARE FINISHED GRADE ALONG THE PROPOSED CENTER LINE.

CLD 12-020 MODEL: TEMP BRIDGE PRO

PROJECT NAME: STOWE	
PROJECT NUMBER: BRF 0235(15)	
FILE NAME: z88cl90proDetour.dgn	PLOT DATE: 5/8/2015
PROJECT LEADER: J. BYATT	DRAWN BY: K. RUTTER
DESIGNED BY: K. RUTTER	CHECKED BY: C. GREGORY
TRAFFIC CONTROL PROFILE SHEET	SHEET 24 OF 79

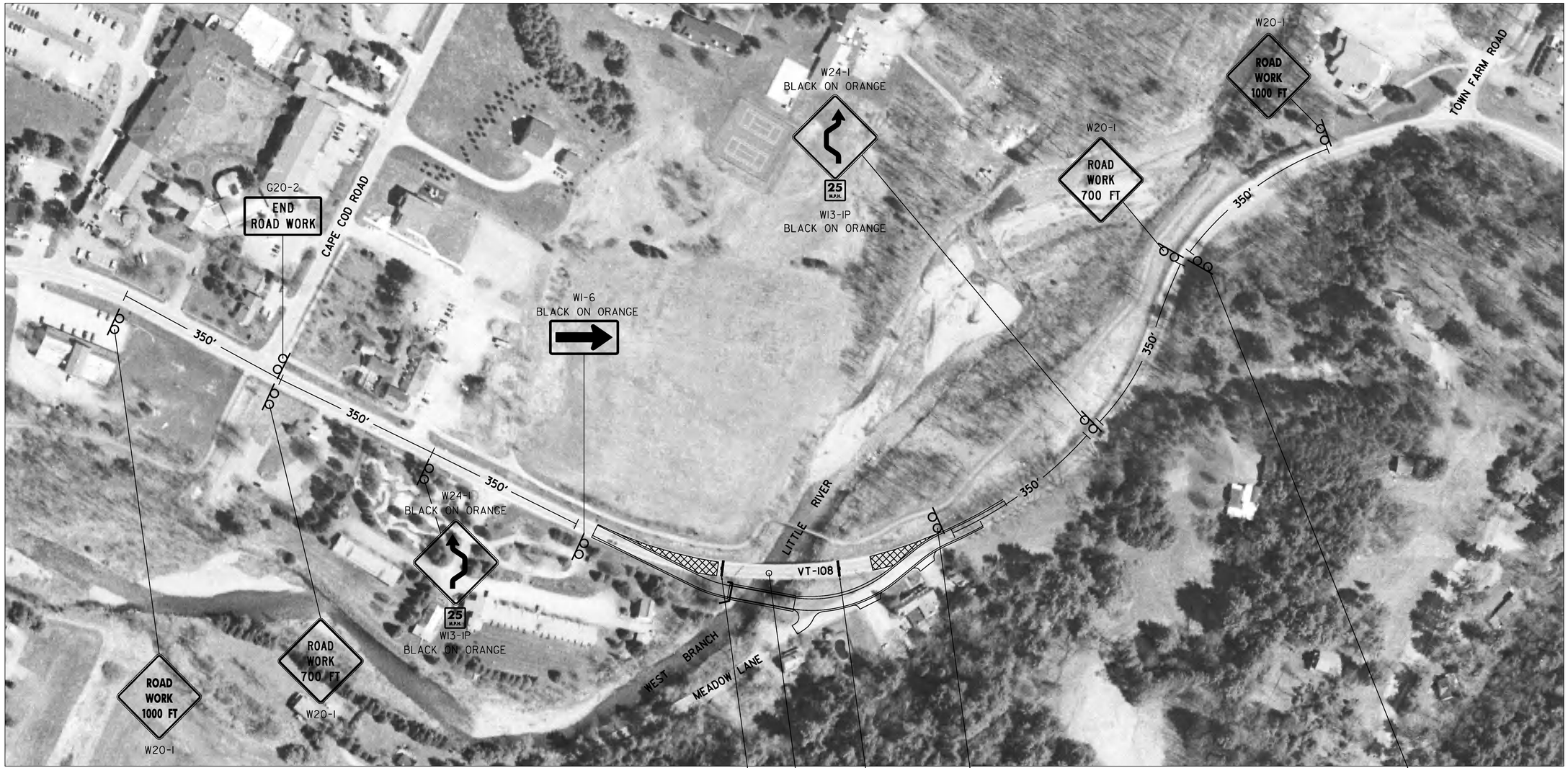

NOTES:

1. ALL TEMPORARY TRAFFIC SIGNS SHALL BE PAID FOR UNDER ITEM 641.10, TRAFFIC CONTROL, UNLESS OTHERWISE SPECIFIED.
2. NO CONSTRUCTION SIGN SHALL BE INSTALLED AS TO INTERFERE OR OBSTRUCT THE VIEW OF EXISTING TRAFFIC CONTROL DEVICES, STOPPING SIGHT DISTANCE, AND CORNER SIGHT DISTANCE FROM DRIVES AND INTERSECTING ROADS.
3. ALL PERMANENT SIGNS THAT CONFLICT WITH TEMPORARY TRAFFIC CONTROL SHALL BE COMPLETELY COVERED DURING CONSTRUCTION.
4. THE CONTRACTOR SHALL PROVIDE TWO (2) PORTABLE CHANGEABLE MESSAGE SIGNS FOR THE DURATION OF THE PROJECT, WHICH SHALL BE PAID UNDER ITEM 641.15, PORTABLE CHANGEABLE MESSAGE SIGN. THE LOCATION AND MESSAGE CONTENT SHALL BE DETERMINED IN THE FIELD BY THE ENGINEER.
5. MAINTAIN ACCESS TO DRIVES.

100 0 100

SCALE: 1" = 100'-0"

RII-2 B/W SIGN MOUNTED ON TYPE III BARRICADE (MODIFIED)

CONSULTING ENGINEERS

PROJECT NAME:	STOWE
PROJECT NUMBER:	BRF 0235(15)
FILE NAME: z88cl90tcpsign.dgn	PLOT DATE: 5/8/2015
PROJECT LEADER: J. BYATT	DRAWN BY: M. SMITH
DESIGNED BY: K. RUTTER	CHECKED BY: C. GREGORY
TRAFFIC CONTROL SIGN PLAN	SHEET 25 OF 79

CLD 12-020 MODEL: TCP SIGN PLAN

TEMPORARY 4 INCH WHITE LINE, PAINT
DURABLE 4 INCH WHITE LINE (OPTION BID ITEM)
STA 10+00 TO 14+75 SOLID LT & RT

TEMPORARY 4 INCH YELLOW LINE, PAINT
DURABLE 4 INCH YELLOW LINE (OPTION BID ITEM)
STA 10+00 TO 14+75 SOLID LT & RT

REMOVING SIGNS
AS SHOWN - 1

ERECTING SALVAGED SIGNS
AS SHOWN - 1

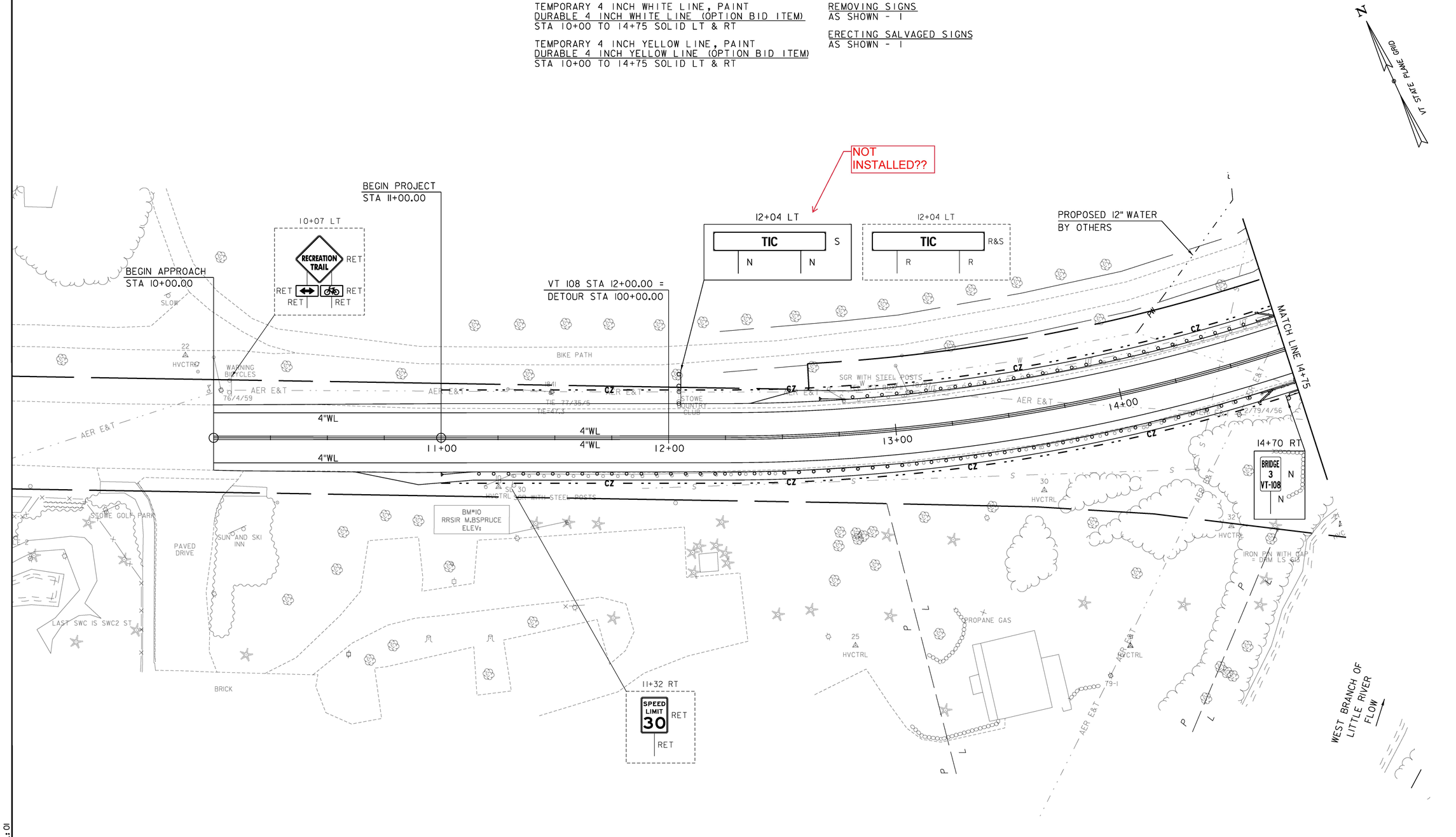

PROJECT NAME: STOWE	
PROJECT NUMBER: BRF 0235(15)	
FILE NAME: z88c190bdrts.dgn	PLOT DATE: 5/8/2015
PROJECT LEADER: J. BYATT	DRAWN BY: S. GOODWIN
DESIGNED BY: K. RUTTER	CHECKED BY: C. GREGORY
TRAFFIC SIGN & LINE LAYOUT SHEET 1	SHEET 26 OF 79

CLD 12-0120 MODEL: 01

TEMPORARY 4 INCH WHITE LINE, PAINT
DURABLE 4 INCH WHITE LINE (OPTION BID ITEM)
STA 14+75 TO 21+00 SOLID LT
STA 14+75 TO 17+56 SOLID RT
STA 17+50 TO 17+56 SOLID RT (TH 38)
STA 17+58 TO 19+01 SOLID RT (TH 38)
STA 19+01 TO 21+00 SOLID RT

TEMPORARY 4 INCH YELLOW LINE, PAINT
DURABLE 4 INCH YELLOW LINE (OPTION BID ITEM)
STA 14+75 TO 17+93 SOLID LT & RT
STA 17+54 TO 18+13 DOUBLE SOLID RT (TH 38)
STA 18+33 TO 21+00 SOLID LT & RT

~~TEMPORARY 24 INCH STOP BAR, PAINT~~
~~DURABLE 24 INCH STOP BAR (OPTION BID ITEM)~~
~~STA 18+14 TO 18+17 RT~~

~~TEMPORARY LETTER OR SYMBOL, PAINT~~
~~DURABLE LETTER OR SYMBOL (OPTION BID ITEM)~~
~~STA 18+08 RT - "STOP"~~

REMOVING SIGNS
AS SHOWN - 1

ITEMS NOT USED.

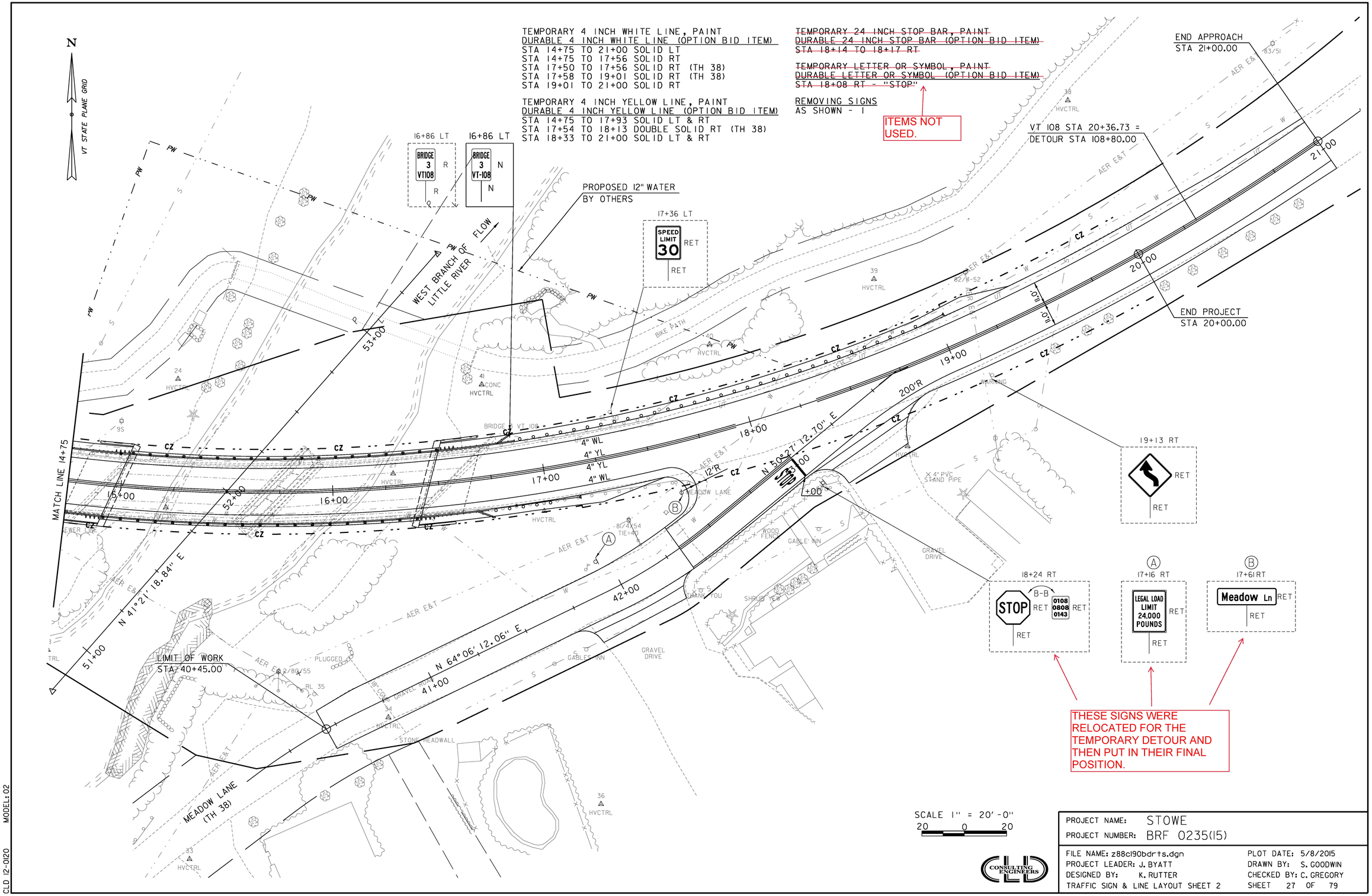

PROJECT NAME: STOWE	
PROJECT NUMBER: BRF 0235(15)	
FILE NAME: z88c190bdrts.dgn	PLOT DATE: 5/8/2015
PROJECT LEADER: J. BYATT	DRAWN BY: S. GOODWIN
DESIGNED BY: K. RUTTER	CHECKED BY: C. GREGORY
TRAFFIC SIGN & LINE LAYOUT SHEET 2	SHEET 27 OF 79

CLD 12-0120 MODEL: 02

STATE OF VERMONT
AGENCY OF TRANSPORTATION

TRAFFIC SIGN SUMMARY SHEET

SHSM = FHWA 2004 STANDARD HIGHWAY SIGNS AND MARKINGS BOOK AND THE 2012 SUPPLEMENT TO THE 2004 EDITION

MILEMARKER, STATION, OR SIGN NUMBER	SIGN LEGEND	SIGN DIMENSIONS			NEW & SALVAGED SIGNS				EXIST POST		NEW SIGN POSTS																	REMARKS	SIGN DETAIL		
		EA	WIDTH (in)	HEIGHT (in)	"A"	"B"	SALV SIGN	SALV TIS	RETAIN	SALVAGE	NO. OF POSTS	SQUARE STEEL (in)				TUBULAR ALUMINUM Ø (in)			TUBULAR STEEL Ø (in)					W-SHAPE STEEL				SIGN REQUIRED		SHSM	DETAIL ON SHEET NUMBER	STD. SHEET NUMBER
												1.75	2.0	2.5	ANCHOR	SLEEVE	3.0	4.0	4.0 MOD	FOUND-ATION	3.0	3.5	4.0	5.0	FTG. SIZE 24"	FTG. SIZE 30"	WEIGHT	POST SIZE					
												lb/ft					lb/ft				lb/ft											
												1.88	2.42	3.35			1.3	1.7	1.7		7.6	9.0	10.8	14.6								
STOWE VT 108																																
12+04 LT	TIC							1			2		X		X																	
14+70 RT	BRIDGE 3 VT108	1	6	10	0.42						1	X			X													VD-701			T-42
16+86 LT	BRIDGE 3 VT108	1	6	10	0.42						1	X			X													VD-701			T-42
	SUBTOTALS				0.84			1				20	30																			
	ROUNDING				0.16							0	0																			
												FT 20	FT 30	FT		EA	LB	LB	LB		LB	LB	LB	LB								
	PROJECT TOTALS	SF 1			SF		EA.	EA. 1				FT 50					LB			EA.	LB				EA.	EA.	LB					

FINAL POST LENGTHS ARE TO BE DETERMINED IN THE FIELD. POST SIZES ARE COMPUTED BASED ON INFORMATION FURNISHED ON THE STANDARD SHEETS AND VTRANS "SIGN POST DESIGN GUIDELINE."

CLD 12-0120

CONSULTING ENGINEERS

PROJECT NAME: STOWE
PROJECT NUMBER: BRF 0235(15)

FILE NAME: z88c190tsdet.dgn
PROJECT LEADER: J. BYATT
DESIGNED BY: K. RUTTER
TRAFFIC SIGN SUMMARY SHEET

PLOT DATE: 5/8/2015
DRAWN BY: S. GOODWIN
CHECKED BY: C. GREGORY
SHEET 28 OF 79

ITEM 656.80 - LANDSCAPE BACKFILL TRUCK MEASUREMENT

BED	LENGTH	WIDTH	DEPTH
A	40'	8'	3'
B	20'	10'	3'
C	30'	25'	3'
D	40'	10'	3'
E	50'	9'	2'

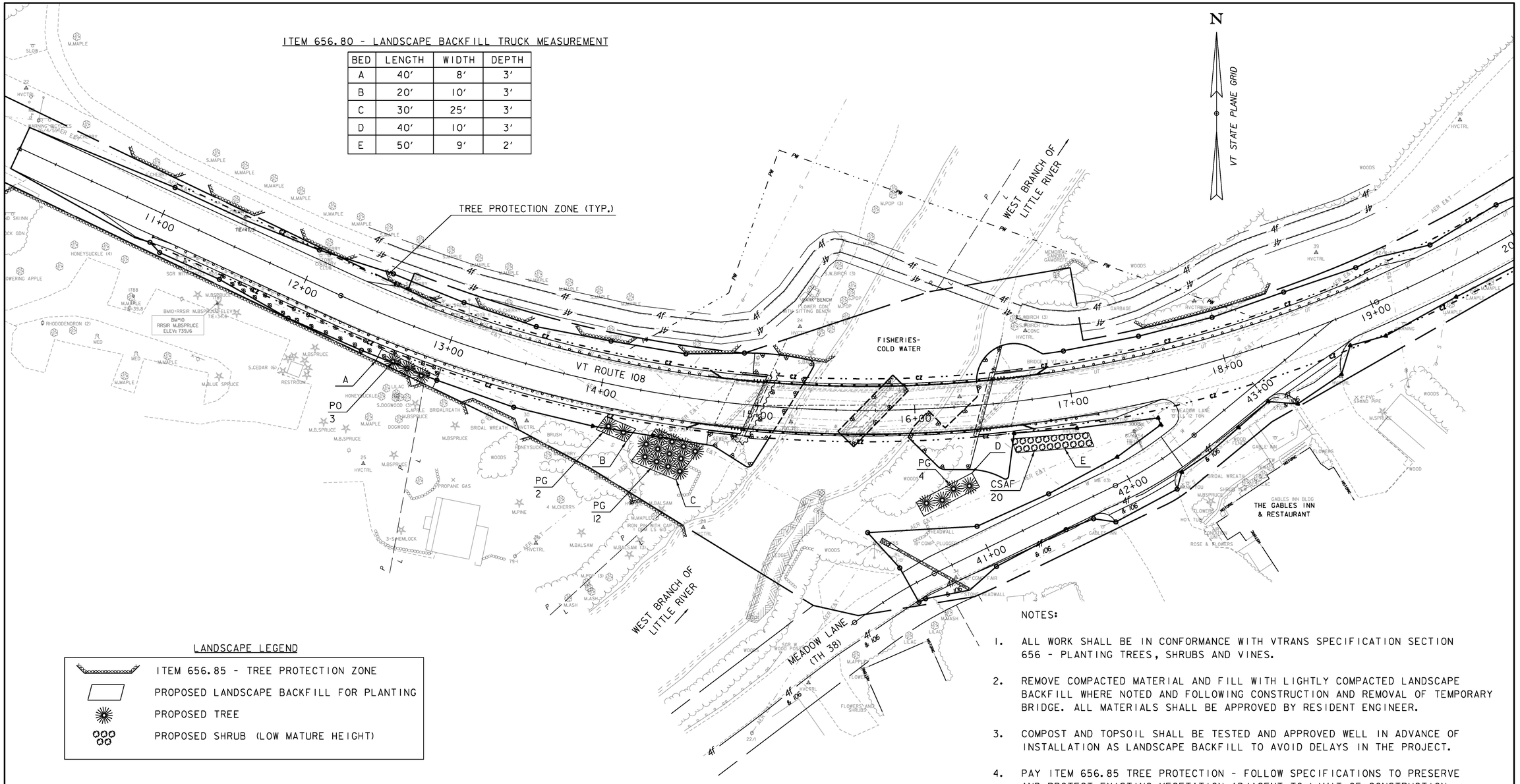

LANDSCAPE LEGEND

- ITEM 656.85 - TREE PROTECTION ZONE
- PROPOSED LANDSCAPE BACKFILL FOR PLANTING
- PROPOSED TREE
- PROPOSED SHRUB (LOW MATURE HEIGHT)

PLANT LIST

QUANTITY	KEY	BOTANICAL NAME	COMMON NAME	SIZE	CONTAINER	SPACING, REMARKS, ITEMS
		EVERGREEN TREES				**ITEM NO. 656.20**
18	PG	PICES GLAUCA	WHITE SPRUCE	3' HEIGHT	B&B	8' ON CENTER AS SHOWN ON PLAN
3	PO	PICEA OMORIKA	SIBERIAN SPRUCE	3' HEIGHT	B&B	10' ON CENTER AS SHOWN ON PLAN
		DECIDUOUS TREES				**ITEM NO. 656.35**
20	CSAF	CORNUS SERICEA ARCTIC FIRE	ARCTIC FIRE RED DOGWOOD	2 GALLON	CONTAINER	5' ON CENTER

NOTES:

1. ALL WORK SHALL BE IN CONFORMANCE WITH VTRANS SPECIFICATION SECTION 656 - PLANTING TREES, SHRUBS AND VINES.
2. REMOVE COMPACTED MATERIAL AND FILL WITH LIGHTLY COMPACTED LANDSCAPE BACKFILL WHERE NOTED AND FOLLOWING CONSTRUCTION AND REMOVAL OF TEMPORARY BRIDGE. ALL MATERIALS SHALL BE APPROVED BY RESIDENT ENGINEER.
3. COMPOST AND TOPSOIL SHALL BE TESTED AND APPROVED WELL IN ADVANCE OF INSTALLATION AS LANDSCAPE BACKFILL TO AVOID DELAYS IN THE PROJECT.
4. PAY ITEM 656.85 TREE PROTECTION - FOLLOW SPECIFICATIONS TO PRESERVE AND PROTECT EXISTING VEGETATION ADJACENT TO LIMIT OF CONSTRUCTION.
5. ALL PLANTS SHALL BE INSTALLED PER VTRANS SPECIFICATION SUBSECTION 656.08, AND WATERED AT TIME OF INSTALLATION AND DURING WARRANTY PERIOD AS PER SUBSECTION 656.08(F). FOLLOW VTRANS SPECIFICATION FOR QUANTITIES AND WATERING LOG.
6. THE TREE PROTECTION ZONE FROM STA. 10+00 TO STA. 12+90, RIGHT HAS BEEN PROVIDED AT THE REQUEST OF THE ADJACENT PROPERTY OWNER FOR SAFETY PURPOSES.

SCALE 1" = 30'-0"
30 0 30

CONSULTING ENGINEERS

PROJECT NAME: STOWE
PROJECT NUMBER: BRF 0235(15)

FILE NAME: z88cl90bdrlds.dgn
PROJECT LEADER: J. BYATT
DESIGNED BY: K. RUTTER
LANDSCAPE LAYOUT SHEET

PLOT DATE: 5/8/2015
DRAWN BY: M. SMITH
CHECKED BY: C. GREGORY
SHEET 29 OF 79

CLD 12-0120 MODEL: 01

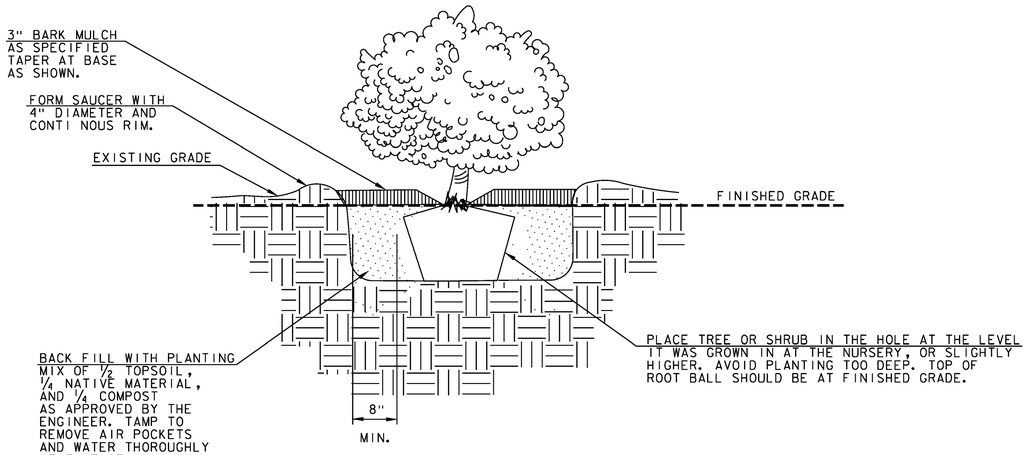

SHRUB PLANTING DETAIL

NOT TO SCALE

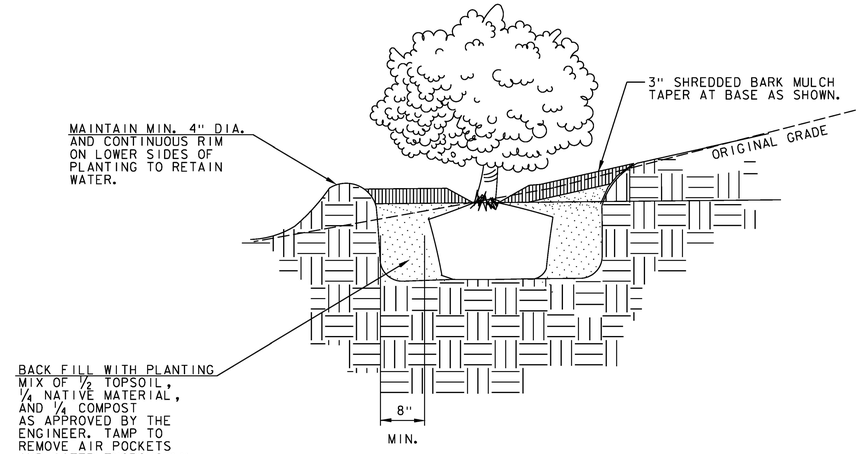

SHRUB PLANTING ON SLOPES DETAIL

GENERAL LANDSCAPE NOTES:

1. SHRUBS TO RECEIVE A MINIMUM OF 5 GALLONS AT EACH WATERING, TWICE WEEKLY DURING ESTABLISHMENT PERIOD.

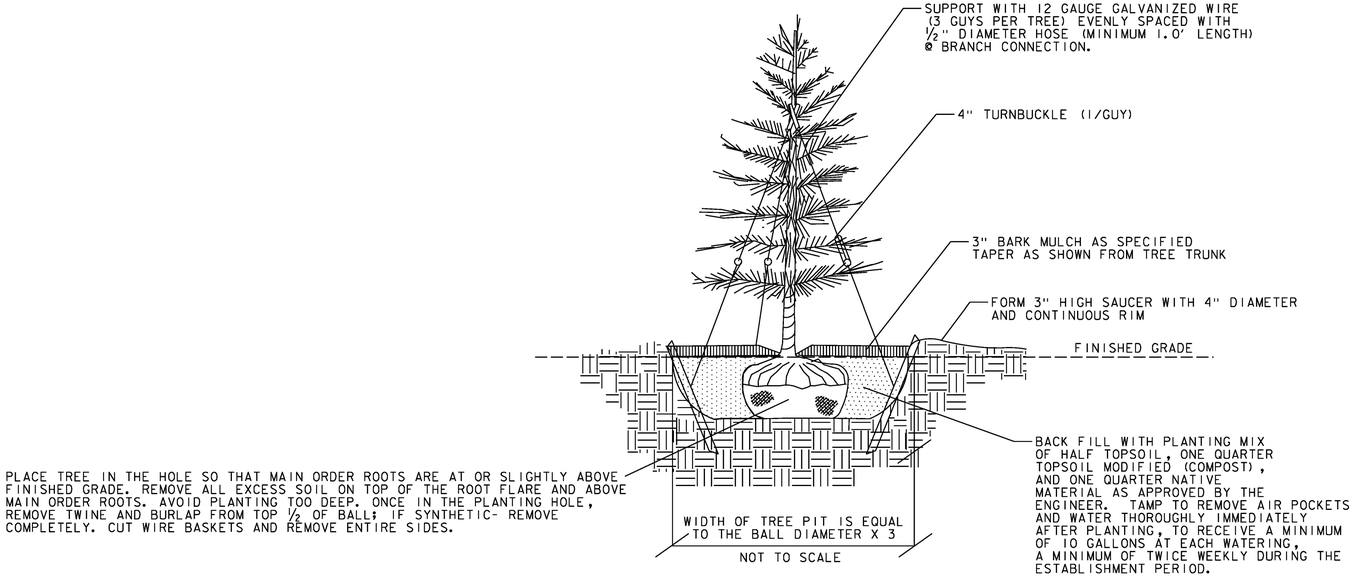

NOT TO SCALE

EVERGREEN TREE PLANTING DETAIL

NOTES:

1. ANTI-DESICCANT SPRAY IS TO BE APPLIED TO ALL EVERGREENS PER MANUFACTURER'S SPECIFICATIONS.
2. COMPLETELY REMOVE ALL GUY WIRES AND TURNBUCKLE ONE YEAR AFTER PLANTING.

GENERAL LANDSCAPE NOTES:

1. PER ITEM 651.18, FERTILIZER, MYCORRHIZAL FUNGI SHALL BE APPLIED PER MANUFACTURER'S RECOMMENDATIONS. REFER TO SUBSECTION 651.05 IN THE SPECIFICATIONS FOR THE APPLICATION OF COMPOST.
2. ORGANIC MATERIAL: TOPSOIL, COMPOST AND NATIVE EXISTING SOIL SHALL BE TESTED AT AN APPROVED LAB PRIOR TO DELIVERY ON SITE AND INSTALLATION. ORGANIC MATTER SHALL BE MINIMUM OF 5%.
3. TOPSOIL BACK FILL MIX: BACK FILL WITH PLANTING MIX OF ONE-HALF SCREENED TOPSOIL, ONE-QUARTER TOPSOIL MODIFIED (COMPOST),AND ONE QUARTER NATIVE MATERIAL AS APPROVED BY THE ENGINEER. TAMP TO REMOVE AIR POCKETS AND WATER THOROUGHLY IMMEDIATELY AFTER PLANTING, TO RECEIVE A MINIMUM OF 10 GALLONS AT EACH WATERING, TWICE WEEKLY DURING THE ESTABLISHMENT PERIOD. UNSUITABLE NATIVE MATERIAL SHALL BE REPLACED WITH IMPORTED APPROVED TOPSOIL AS DIRECTED BY THE ENGINEER.

CLD 12-0120 MODEL: 01

NOT TO SCALE

PROJECT NAME: STOWE	
PROJECT NUMBER: BRF 0235(15)	
FILE NAME: z88cl90ldsdet.dgn	PLOT DATE: 6/1/2015
PROJECT LEADER: J. BYATT	DRAWN BY: M. SMITH
DESIGNED BY: K. RUTTER	CHECKED BY: C. GREGORY
LANDSCAPE DETAILS	SHEET 30 OF 79

SOIL CLASSIFICATION

AASHTO	
A1	Gravel and Sand
A3	Fine Sand
A2	Silty or Clayey Gravel and Sand
A4	Silty Soil - Low Compressibility
A5	Silty Soil - Highly Compressible
A6	Clayey Soil - Low Compressibility
A7	Clayey Soil - Highly Compressible

ROCK QUALITY DESIGNATION

R.Q.D. (%)	ROCK DESCRIPTION
<25	Very Poor
25 to 50	Poor
51 to 75	Fair
76 to 90	Good
>90	Excellent

SHEAR STRENGTH

UNDRAINED SHEAR STRENGTH IN P.S.F.	CONSISTENCY
<250	Very Soft
250-500	Soft
500-1000	Med. Stiff
1000-2000	Stiff
2000-4000	Very Stiff
>4000	Hard

CORRELATION GUIDE OF "N" TO DENSITY/CONSISTENCY

DENSITY (GRANULAR SOILS)		CONSISTENCY (COHESIVE SOILS)	
N	DESCRIPTIVE TERM	N	DESCRIPTIVE TERM
<5	Very Loose	<2	Very Soft
5-10	Loose	2-4	Soft
11-24	Med. Dense	5-8	Med. Stiff
25-50	Dense	9-15	Stiff
>50	Very Dense	16-30	Very Stiff
		31-60	Hard
		>60	Very Hard

COMMONLY USED SYMBOLS

▼	Water Elevation
⊗	Standard Penetration Boring
⊕	Auger Boring
⊙	Rod Sounding
S	Sample
N	Standard Penetration Test Blow Count Per Foot For: 2" O.D. Sampler 1 3/8" I.D. Sampler Hammer Weight Of 140 Lbs. Hammer Fall Of 30"
VS	Field Vane Shear Test
US	Undisturbed Soil Sample
B	Blast
DC	Diamond Core
MD	Mud Drill
WA	Wash Ahead
HSA	Hollow Stem Auger
AX	Core Size 1 1/8"
BX	Core Size 1 5/8"
NX	Core Size 2 1/8"
M	Double Tube Core Barrel Used
LL	Liquid Limit
PL	Plastic Limit
PI	Plasticity Index
NP	Non Plastic
w	Moisture Content (Dry Wgt. Basis)
D	Dry
M	Moist
MTW	Moist To Wet
W	Wet
Sat	Saturated
Bo	Boulder
Gr	Gravel
Sa	Sand
Si	Silt
Cl	Clay
HP	Hardpan
Le	Ledge
NLTD	No Ledge To Depth
CNPF	Can Not Penetrate Further
TLOB	To Ledge Or Boulder
NR	No Recovery
Rec.	Recovery
%Rec.	Percent Recovery
RQD	Rock Quality Designation
CBR	California Bearing Ratio
<	Less Than
>	Greater Than
R	Refusal (N > 100)

COLOR			
blk	Black	pnk	Pink
bl	Blue	pu	Purple
brn	Brown	rd	Red
dk	Dark	tn	Tan
gry	Gray	wh	White
gn	Green	yel	Yellow
lt	Light	mltc	Multicolored
or	Orange		

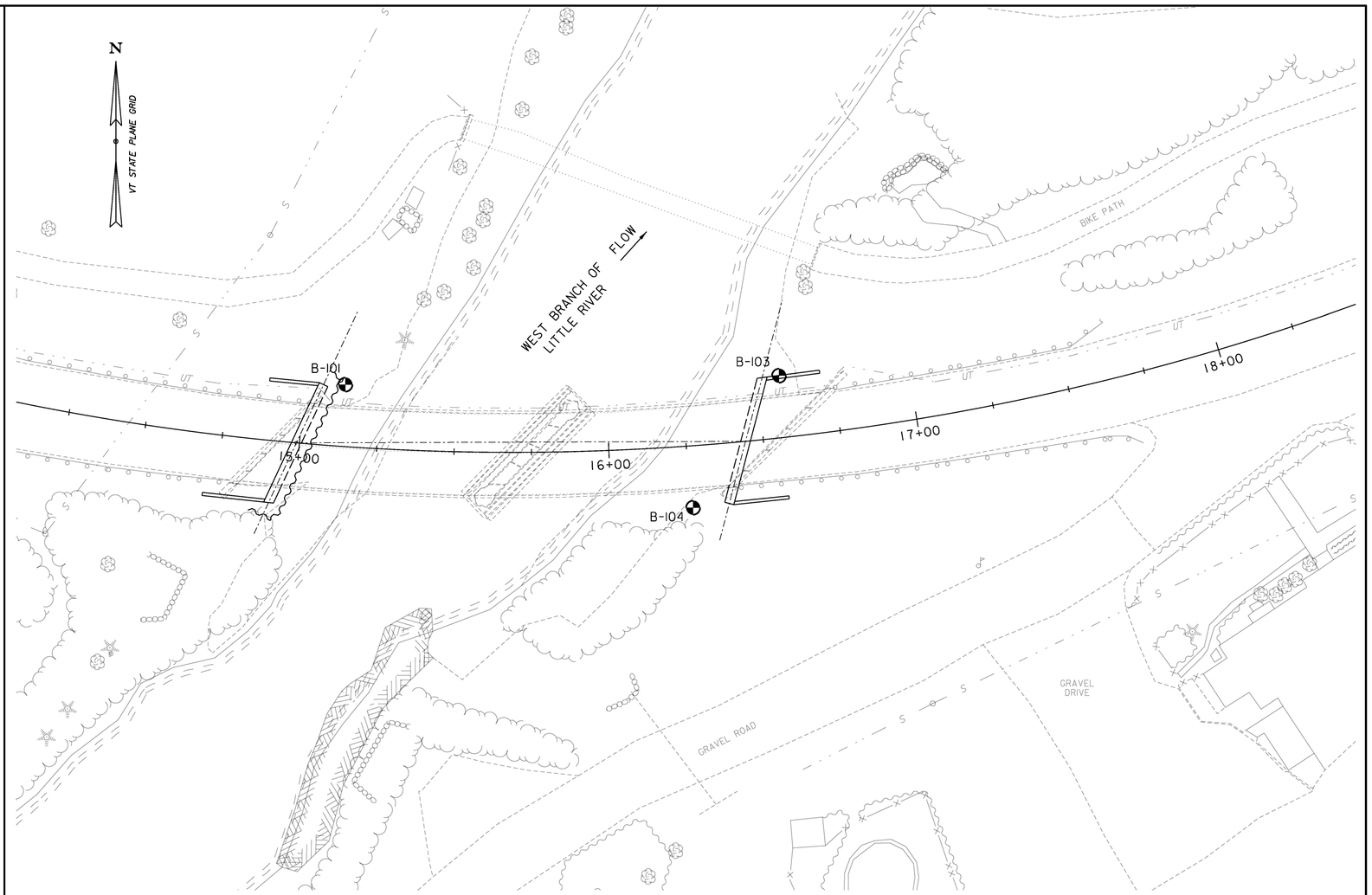

BORING PLAN

SCALE 1" = 20'-0"

20 0 10

SCALE IN FEET

BORING CHART

HOLE NO.	SURV. STATION	OFFSET	GROUND ELEV.	ELEV. TLOB
B-101	15+13.5	-20	740.0	670.5
B-103	16+57.3	-20	738.4	686.4
B-104	16+26.0	+20	745.4	706.9

DEFINITIONS (AASHTO)

BEDROCK (LEDGE) - Rock in its native location of indefinite thickness.

BOULDER - A rock fragment with an average dimension > 12 inches.

COBBLE - Rock fragments with an average dimension between 3 and 12 inches.

GRAVEL - Rounded particles of rock < 3" and > 0.0787" (#10 sieve).

SAND - Particles of rock < 0.0787" (#10 sieve) and > 0.0029" (#200 sieve).

SILT - Soil < 0.0029" (#200 sieve), non or slightly plastic and exhibits no strength when air-dried.

CLAY - Fine grained soil, exhibits plasticity when moist and considerable strength when air-dried.

VARVED - Alternate layers of silt and clay.

HARDPAN - Extremely dense soil, cemented layer, not softened when wet.

MUCK - Soft organic soil (containing > 10% organic material.

MOISTURE CONTENT - Weight of water divided by dry weight of soil.

FLOWING SAND - Granular soil so saturated (loose) that it flows into drill casing during extraction of wash rod.

STRIKE - Angle from magnetic north to line of intersection of bed with a horizontal plane.

DIP - Inclination of bed with a horizontal plane.

GENERAL NOTES

1. The subsurface explorations shown herein were made between 8/21/13 and 8/27/13 by the Agency.
2. Soil and rock classifications, properties and descriptions are based on engineering interpretation from available subsurface information by the Agency and may not necessarily reflect actual variations in subsurface conditions that may be encountered between individual boring or sample locations.
3. Observed water levels and/or conditions indicated are as recorded at the time of exploration and may vary according to the prevailing rainfall, methods of exploration and other factors.
4. Engineering judgement was exercised in preparing the subsurface information presented herein. Analysis and interpretation of subsurface data was performed and interpreted for Agency design and estimating purposes. Presentation of the information in the Contract is intended to provide the Contractor access to the same data available to the Agency. The subsurface information is presented in good faith and is not intended as a substitute for personal investigation, independent interpretation, independent analysis or judgement by the Contractor.
5. Pictorial structure details shown on the boring plan layout or soils profile are for illustrative purposes only and may not accurately portray final contract details.
6. Terminology used on boring logs to describe the hardness, degree of weathering, and spacing of fractures, joints and other discontinuities in the bedrock is defined in the AASHTO Manual on Subsurface Investigations, 1988.

CONSULTING ENGINEERS

PROJECT NAME: STOWE

PROJECT NUMBER: BRF 0235(15)

FILE NAME: z88cl90bor.dgn
PROJECT LEADER: J. BYATT
DESIGNED BY: J. FRENCH
BORING INFORMATION SHEET

PLOT DATE: 5/8/2015
DRAWN BY: M. SMITH
CHECKED BY: J. BYATT
SHEET 31 OF 79

CLD 12-020 MODEL: BORO

STATE OF VERMONT
AGENCY OF TRANSPORTATION
MATERIALS & RESEARCH SECTION
SUBSURFACE INFORMATION

BORING LOG

STOWE
BHF 0235(15)
VT-108 BR-3

Boring No.: **B-101**
Page No.: 1 of 2
Pin No.: 88C190
Checked By: MLM

Boring Crew: DAIGNEAULT, JUDKINS
Date Started: 8/23/13 Date Finished: 8/26/13
VTSPG NAD83: N 719003.02 ft E 1586383.77 ft
Station: 15+13.5 Offset: -20.00
Ground Elevation: 740.0 ft

	Casing	Sampler
Type:	WB	SS
I.D.:	4 in	1.5 in
Hammer Wt:	N.A.	140 lb.
Hammer Fall:	N.A.	30 in.
Hammer/Rod Type:	Auto/AW-J	
Rig:	CME 55 TRACK	C_E = 1.46

Groundwater Observations

Date	Depth (ft)	Notes
08/26/13	12.4	While drilling.

Depth (ft)	Strata (1)	CLASSIFICATION OF MATERIALS (Description)	Run (Dip deg.)	Core Rec. % (RQD %)	Drill Rate minutes/ft	Blows/6" (N Value)	Moisture Content %	Gravel %	Sand %	Fines %
		Visual Description:, SiGrSa, Dk/brn, Moist, Rec. = 0.3 ft, Insufficient sample for testing.				1-1-3-5 (4)	13.2			
		Visual Description:, SaGr, Dk/brn, Moist, Rec. = 0.2 ft, Insufficient sample for testing.				6-8-6-2 (14)	9.2			
5		A-1-b, SaGr, brn, Moist, Rec. = 0.7 ft				6-9-10-10 (19)	8.3	52.8	28.1	19.1
		A-1-b, SaGr, brn, Moist, Rec. = 0.7 ft				6-7-10-13 (17)	9.8	46.1	40.9	13.0
		A-1-b, SiSaGr, brn, Moist, Rec. = 0.7 ft				10-16-14-16 (30)	9.4	40.2	36.0	23.8
10		A-1-b, SaGr, brn, Moist, Rec. = 0.5 ft, Broken Rock was within sample.				8-7-7-9 (14)	9.7	49.1	33.3	17.6
		A-2-4, SiSaGr, brn, MTW, Rec. = 0.6 ft				6-10-6-5 (16)	14.1	38.9	34.2	26.9
15		A-4, Si, gry, Wet, Rec. = 0.8 ft				3-4-3-4 (7)	26.6	0.4	13.3	86.3
		A-4, Si, gry, Wet, Rec. = 0.7 ft				1-3-3-4 (6)	27.0	3.6	8.1	88.3
		A-4, Si, gry, Wet, Rec. = 1.4 ft				2-2-2-3 (4)	30.8		3.4	96.6
20										
25		A-4, Si, gry, Wet, Rec. = 1.2 ft				5-2-3-3 (5)	27.6	6.9	4.4	88.7
30		A-4, Si, gry, Wet, Rec. = 1.0 ft				2-4-3-2 (7)	28.6		11.2	88.8
35		A-4, Si, gry, Wet, Rec. = 0.9 ft				2-3-3-4 (6)	25.3	1.6	16.2	82.2
40		A-4, Si, gry, Wet, Rec. = 1.2 ft				1-3-3-3 (6)	27.5	0.6	6.0	93.4

Notes:
1. Stratification lines represent approximate boundary between material types. Transition may be gradual.
2. N Values have not been corrected for hammer energy. C_E is the hammer energy correction factor.
3. Water level readings have been made at times and under conditions stated. Fluctuations may occur due to other factors than those present at the time measurements were made.

BOTTOM OF ABUT. I
EL. 733.0'

ESTIMATED PILE TIP
EL. 670.5'

STATE OF VERMONT
AGENCY OF TRANSPORTATION
MATERIALS & RESEARCH SECTION
SUBSURFACE INFORMATION

BORING LOG

STOWE
BHF 0235(15)
VT-108 BR-3

Boring No.: **B-101**
Page No.: 2 of 2
Pin No.: 88C190
Checked By: MLM

Boring Crew: DAIGNEAULT, JUDKINS
Date Started: 8/23/13 Date Finished: 8/26/13
VTSPG NAD83: N 719003.02 ft E 1586383.77 ft
Station: 15+13.5 Offset: -20.00
Ground Elevation: 740.0 ft

	Casing	Sampler
Type:	WB	SS
I.D.:	4 in	1.5 in
Hammer Wt:	N.A.	140 lb.
Hammer Fall:	N.A.	30 in.
Hammer/Rod Type:	Auto/AW-J	
Rig:	CME 55 TRACK	C_E = 1.46

Groundwater Observations

Date	Depth (ft)	Notes
08/26/13	12.4	While drilling.

Depth (ft)	Strata (1)	CLASSIFICATION OF MATERIALS (Description)	Run (Dip deg.)	Core Rec. % (RQD %)	Drill Rate minutes/ft	Blows/6" (N Value)	Moisture Content %	Gravel %	Sand %	Fines %
		A-4, Si, gry, MTW, Rec. = 1.2 ft				6-5-6-6 (11)	24.7	5.8	15.8	78.4
50		A-4, SaSi, gry, MTW, Rec. = 0.8 ft				3-4-5-6 (9)	21.6	9.3	22.5	68.2
55		Field Note:, No Recovery				18-7-7-4 (14)				
60		Field Note:, No Recovery				6-4-5-4 (9)				
65		Field Note:, No Recovery				8-6-3-3 (9)				
70		69.5 ft - 74.5 ft, Light gray to green, Chlorite-muscovite-quartz Schist, with white quartzofeldspathic layers. Moderately hard, Unweathered, Fair rock, NXMDC, RMR = 52	1 (20)	96 (28)	8 6 6 5 6	Top of Bedrock @ 69.5 ft				
75		74.5 ft - 79.5 ft, Light gray to green, Chlorite-muscovite-quartz Schist, with white quartzofeldspathic layers. Moderately hard, Unweathered, Fair rock, NXMDC, RMR = 57	2 (30)	88 (60)	5 6 6 7 8					
80		Hole stopped @ 79.5 ft								
85		Remarks: 1. Hole collasped at 11.2 ft.								

Notes:
1. Stratification lines represent approximate boundary between material types. Transition may be gradual.
2. N Values have not been corrected for hammer energy. C_E is the hammer energy correction factor.
3. Water level readings have been made at times and under conditions stated. Fluctuations may occur due to other factors than those present at the time measurements were made.

BORING LOG 2 STOWE BHF 0235(15).GPJ VERMONT AOT.GDT 8/30/13

CLD 12-0120 $FILEABBREV$ MODEL: BOR02

CONSULTING ENGINEERS

PROJECT NAME: STOWE
PROJECT NUMBER: BRF 0235(15)

FILE NAME: z88c190bor.dgn
PROJECT LEADER: J. BYATT
DESIGNED BY: J. FRENCH
BORING LOGS (1 OF 2)

PLOT DATE: 5/8/2015
DRAWN BY: M. SMITH
CHECKED BY: J. BYATT
SHEET 32 OF 79

STATE OF VERMONT
AGENCY OF TRANSPORTATION
MATERIALS & RESEARCH SECTION
SUBSURFACE INFORMATION

BORING LOG

STOWE
BHF 0235(15)
VT-108 BR-3

Boring No.: **B-103**
Page No.: 1 of 2
Pin No.: 88C190
Checked By: MLM

Boring Crew: DAIGNEAULT, JUDKINS
Date Started: 8/27/13 Date Finished: 8/27/13
VTSPG NAD83: N 719001.30 ft E 1586524.99 ft
Station: 16+57.3 Offset: -20.00
Ground Elevation: 738.4 ft

	Casing	Sampler
Type:	WB	SS
I.D.:	4 in	1.5 in
Hammer Wt:	N.A.	140 lb.
Hammer Fall:	N.A.	30 in.
Hammer/Rod Type:	Auto/AWJ	
Rig:	CME 55 TRACK	C_e = 1.46

Groundwater Observations

Date	Depth (ft)	Notes
08/27/13	11.4	After drilling.

Depth (ft)	Strata (1)	CLASSIFICATION OF MATERIALS (Description)	Run (Dip deg.)	Core Rec. % (RQD %)	Drill Rate minutes/ft	Blows/6" (N Value)	Moisture Content %	Gravel %	Sand %	Fines %
		A-1-b, GrSa, Dk/brn, Moist, Rec. = 0.5 ft, Broken Rock was within sample.				1-1-1-8 (2)	6.3	42.5	45.4	12.1
		A-1-a, SaGr, Lt/brn, Moist, Rec. = 0.6 ft, Lab Note: Mostly Broken Rock				3-1-3-5 (4)	4.5	65.1	24.6	10.3
5		A-1-b, SiSaGr, brn, Moist, Rec. = 0.4 ft, Broken Rock was within sample.				3-8-9-10 (17)	9.9	50.9	26.8	22.3
		A-1-b, SaGr, brn, Moist, Rec. = 0.8 ft				8-13-16-12 (29)	9.9	49.3	37.2	13.5
		A-1-b, SaGr, brn, Moist, Rec. = 0.7 ft, Broken Rock was within sample.				5-11-14-20 (25)	8.7	45.8	38.5	15.7
10		A-2-4, SiSaGr, brn, Moist, Rec. = 0.5 ft				9-9-8-5 (17)	10.2	43.0	29.8	27.2
		A-1-a, SaGr, brn, Moist, Rec. = 0.4 ft				3-5-9-5 (14)	10.2	56.3	28.9	14.8
15		Visual Description:, SaGr, gry, Moist, Rec. = 0.1 ft, Stone caught in sampler. Insufficient sample for testing.				3-4-6-8 (10)				
		A-1-b, SaGr, gry, Moist, Rec. = 0.7 ft				7-7-9-9 (16)	10.1	49.3	38.2	12.5
		A-1-b, GrSa, gry-rust, Moist, Rec. = 0.6 ft, Lab Note: Sample had an orange colored area with the remainder of sample being gray.				9-8-7-7 (15)	13.9	33.7	48.7	17.6
20										
25		A-4, Si, gry, MTW, Rec. = 1.0 ft				6-3-3-4 (6)	31.5	3.9	3.3	92.8
30		A-4, Si, gry, MTW, Rec. = 0.8 ft				4-3-3-3 (6)	30.3		7.6	92.4
35		A-4, SaSi, gry, MTW, Rec. = 0.8 ft				5-4-3-2 (7)	19.0	12.9	35.2	51.9
40		Field Note:, No Recovery				3-1-1-1 (2)				

BOTTOM OF ABUT. 2
EL. 732.0'

Notes:
1. Stratification lines represent approximate boundary between material types. Transition may be gradual.
2. N Values have not been corrected for hammer energy. C_e is the hammer energy correction factor.
3. Water level readings have been made at times and under conditions stated. Fluctuations may occur due to other factors than those present at the time measurements were made.

BORING LOG 2 STOWE BHF 0235(15).GPJ VERMONT AOT.GDT 9/30/13

STATE OF VERMONT
AGENCY OF TRANSPORTATION
MATERIALS & RESEARCH SECTION
SUBSURFACE INFORMATION

BORING LOG

STOWE
BHF 0235(15)
VT-108 BR-3

Boring No.: **B-103**
Page No.: 2 of 2
Pin No.: 88C190
Checked By: MLM

Boring Crew: DAIGNEAULT, JUDKINS
Date Started: 8/27/13 Date Finished: 8/27/13
VTSPG NAD83: N 719001.30 ft E 1586524.99 ft
Station: 16+57.3 Offset: -20.00
Ground Elevation: 738.4 ft

	Casing	Sampler
Type:	WB	SS
I.D.:	4 in	1.5 in
Hammer Wt:	N.A.	140 lb.
Hammer Fall:	N.A.	30 in.
Hammer/Rod Type:	Auto/AWJ	
Rig:	CME 55 TRACK	C_e = 1.46

Groundwater Observations

Date	Depth (ft)	Notes
08/27/13	11.4	After drilling.

Depth (ft)	Strata (1)	CLASSIFICATION OF MATERIALS (Description)	Run (Dip deg.)	Core Rec. % (RQD %)	Drill Rate minutes/ft	Blows/6" (N Value)	Moisture Content %	Gravel %	Sand %	Fines %
		Visual Description:, Broken Rocks, gry, Moist, Rec. = 0.1 ft, Stone caught in sampler. Insufficient sample for testing.				3-1-1-5 (2)				
50		A-1-b, SaGr, gry, Moist, Rec. = 0.7 ft, Lab Note: Broken Rock & little Weathered Rock was within sample.				19-29-R@1.0" (R)	11.3	46.0	35.2	18.8
		Field Note:, NXDC	1	100	12	Top of Bedrock @ 52.0 ft				
55		52.0 ft - 57.0 ft, Dark gray & black, Carbonaceous, graphitic, biotite-muscovite-quartz Phyllite, with silicic laminae. Moderately hard, Unweathered, Fair rock, NXMDC, RMR = 49	(45)	(50)	7 5 4 4					
60		57.0 ft - 62.0 ft, Dark gray & black, Carbonaceous, graphitic, biotite-muscovite-quartz Phyllite, with silicic laminae. Moderately hard, Unweathered, Fair rock, NXMDC, RMR = 49	2	92	4					
			(45)	(54)	3 4 4 4					
		Hole stopped @ 62.0 ft								
65										
		Remarks: 1. Hole collapsed at 7.2 ft.								
70										
75										
80										
85										

ESTIMATED PILE TIP
EL. 686.4'

Notes:
1. Stratification lines represent approximate boundary between material types. Transition may be gradual.
2. N Values have not been corrected for hammer energy. C_e is the hammer energy correction factor.
3. Water level readings have been made at times and under conditions stated. Fluctuations may occur due to other factors than those present at the time measurements were made.

BORING LOG 2 STOWE BHF 0235(15).GPJ VERMONT AOT.GDT 9/30/13

STATE OF VERMONT
AGENCY OF TRANSPORTATION
MATERIALS & RESEARCH SECTION
SUBSURFACE INFORMATION

BORING LOG

STOWE
BHF 0235(15)
VT-108 BR-3

Boring No.: **B-104**
Page No.: 1 of 1
Pin No.: 88C190
Checked By: MLM

Boring Crew: DAIGNEAULT, JUDKINS
Date Started: 8/21/13 Date Finished: 8/22/13
VTSPG NAD83: N 718957.36 ft E 1586495.57 ft
Station: 16+26 Offset: 20.00
Ground Elevation: 745.5 ft

	Casing	Sampler
Type:	WB	SS
I.D.:	4 in	1.5 in
Hammer Wt:	N.A.	140 lb.
Hammer Fall:	N.A.	30 in.
Hammer/Rod Type:	Auto/AWJ	
Rig:	CME 55 TRACK	C_e = 1.46

Groundwater Observations

Date	Depth (ft)	Notes
08/22/13	19.5	While drilling.

Depth (ft)	Strata (1)	CLASSIFICATION OF MATERIALS (Description)	Run (Dip deg.)	Core Rec. % (RQD %)	Drill Rate minutes/ft	Blows/6" (N Value)	Moisture Content %	Gravel %	Sand %	Fines %
		A-2-4, SiGrSa, brn, Moist, Rec. = 0.6 ft				1-1-4-3 (5)	4.8	26.1	49.9	24.0
		A-2-4, SiGrSa, brn, Moist, Rec. = 0.8 ft				3-3-4-3 (7)	6.3	25.4	50.2	24.4
		Visual Description:, Lots of Broken Rock with Sand, brn, Moist, Rec. = 0.2 ft				4-6-7-5 (13)	5.7			
		A-2-4, SiSaGr, brn, Moist, Rec. = 0.4 ft				6-5-5-5 (10)	14.2	36.3	33.2	30.5
		A-2-4, GrSiSa, brn, Moist, Rec. = 0.7 ft, Some Broken Rock was within sample.				6-5-22-R (27)	14.2	25.6	43.4	31.0
10		Visual Description:, Broken Rock with Silty Sand, brn-gry, Moist, Rec. = 0.2 ft				12-7-5-5 (12)	8.9			
		A-1-b, SiSaGr, brn, Moist, Rec. = 0.4 ft				2-4-6-9 (10)	9.1	51.7	26.6	21.7
		Field Note:, No Recovery				9-7-7-9 (14)				
		Visual Description:, SaGr with Broken Rock, gry, MTW, Rec. = 0.4 ft, Insufficient sample for testing.				7-7-15-15 (22)	8.9			
		A-1-b, SiSaGr, brn, MTW, Rec. = 0.3 ft				8-6-7-5 (13)	10.5	43.8	30.7	25.5
20		A-4, Si, brn, Wet, Rec. = 0.8 ft				5-2-3-3 (5)	30.8	1.9	8.7	89.4
		A-4, Si, gry, Wet, Rec. = 1.2 ft				2-2-3-3 (5)	29.6		6.2	93.8
30		A-4, SaSi, gry, Wet, Rec. = 1.0 ft				4-6-5-4 (11)	24.1	2.0	25.2	72.8
		Visual Description:, Broken Rock with Silty Sand, gry, MTW, Rec. = 0.4 ft				11-7-6-8 (13)	7.0			
40		38.5 ft - 39.5 ft, Dark gray & black, Carbonaceous, graphitic, biotite-muscovite-quartz Phyllite, with silicic laminae. Moderately hard, Unweathered, Poor rock, NXDC, Low RQD may be due to mechanical breakage along foliation planes. RMR = 39	1	80	3	Top of Bedrock @ 38.5 ft				
			(45)	(0)	4					
			2	100	4					
			(45)	(0)	5					
		39.5 ft - 44.5 ft, Dark gray & black, Carbonaceous, graphitic, biotite-muscovite-quartz Phyllite, with silicic laminae. Moderately hard, Unweathered, Poor rock, NXMDC, Low RQD may be due to mechanical breakage along foliation planes. RMR = 39			4					
			3	100	5					
			(45)	(20)	3					
		44.5 ft - 49.5 ft, Dark gray & black, Carbonaceous, graphitic, biotite-muscovite-quartz Phyllite, with silicic laminae. Moderately hard, Unweathered, Poor rock, NXMDC, Low RQD may be due to mechanical breakage along foliation planes. RMR = 39			4					
					4					
50					4					
		Hole stopped @ 49.5 ft								
		Remarks: 1. Hole collapsed at 13.8 ft.								

Notes:
1. Stratification lines represent approximate boundary between material types. Transition may be gradual.
2. N Values have not been corrected for hammer energy. C_e is the hammer energy correction factor.
3. Water level readings have been made at times and under conditions stated. Fluctuations may occur due to other factors than those present at the time measurements were made.

BORING LOG 2 STOWE BHF 0235(15).GPJ VERMONT AOT.GDT 9/30/13

CLD 12-020 $FILEABBREV$ MODEL: BOR03

CONSULTING ENGINEERS

PROJECT NAME: STOWE
PROJECT NUMBER: BRF 0235(15)

FILE NAME: z88c190bor.dgn
PROJECT LEADER: J. BYATT
DESIGNED BY: J. FRENCH
BORING LOGS (2 OF 2)

PLOT DATE: 5/8/2015
DRAWN BY: M. SMITH
CHECKED BY: J. BYATT
SHEET 33 OF 79

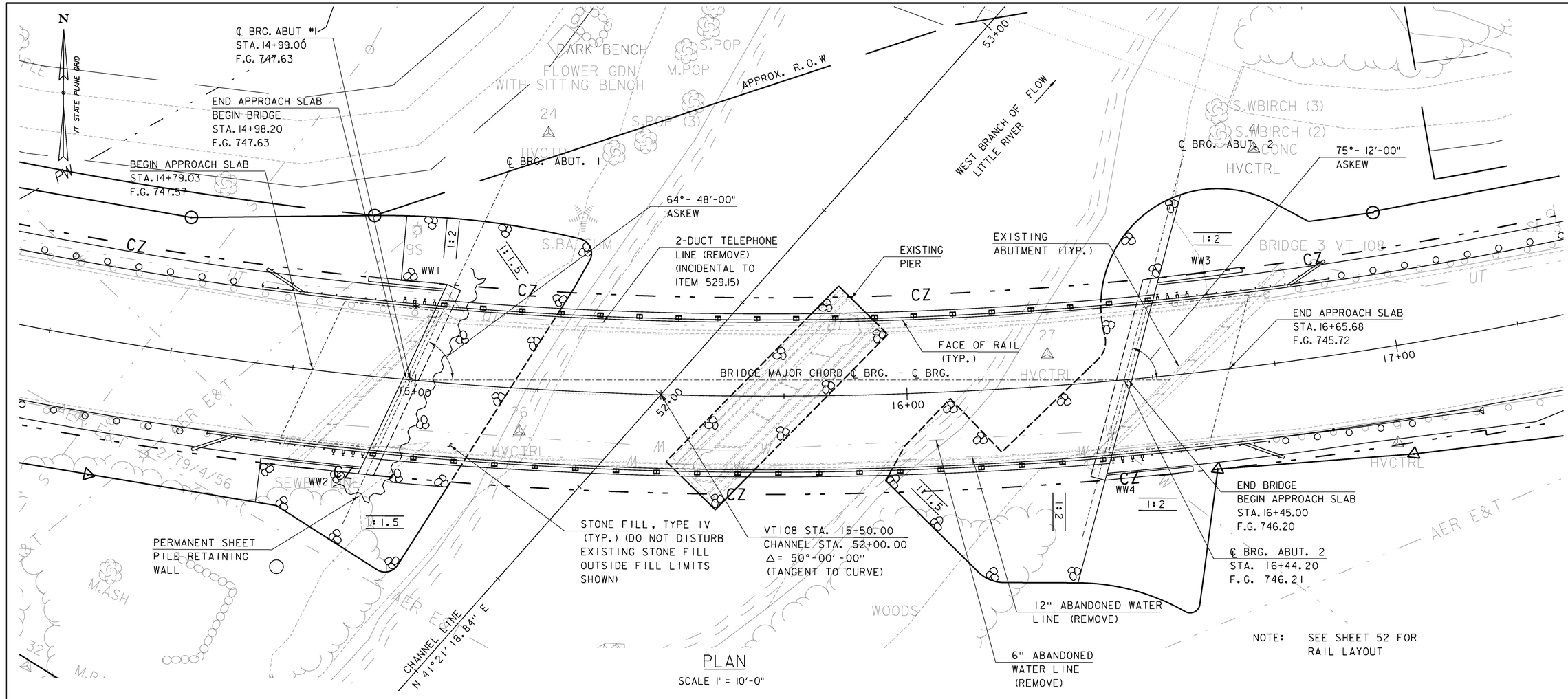

PLAN

SCALE 1" = 10'-0"

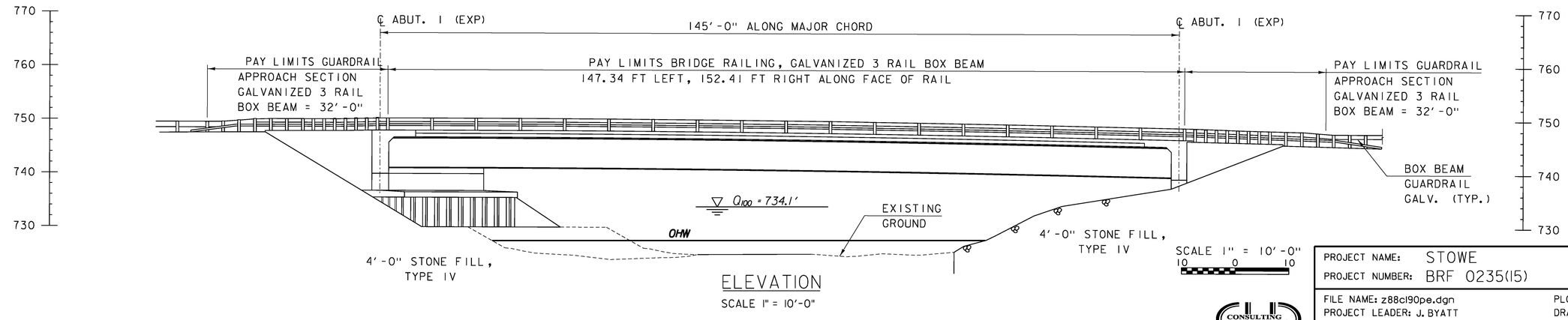

ELEVATION

SCALE 1" = 10'-0"

SCALE 1" = 10'-0"

10 0 10

CONSULTING ENGINEERS

PROJECT NAME:	STOWE
PROJECT NUMBER:	BRF 0235(15)

FILE NAME: z88c190pe.dgn	PLOT DATE: 5/8/2015
PROJECT LEADER: J. BYATT	DRAWN BY: M. SMITH
DESIGNED BY: J. FRENCH	CHECKED BY: J. BYATT
PLAN AND ELEVATION	SHEET 34 OF 79

CLD 12-0020 MODEL: PE01

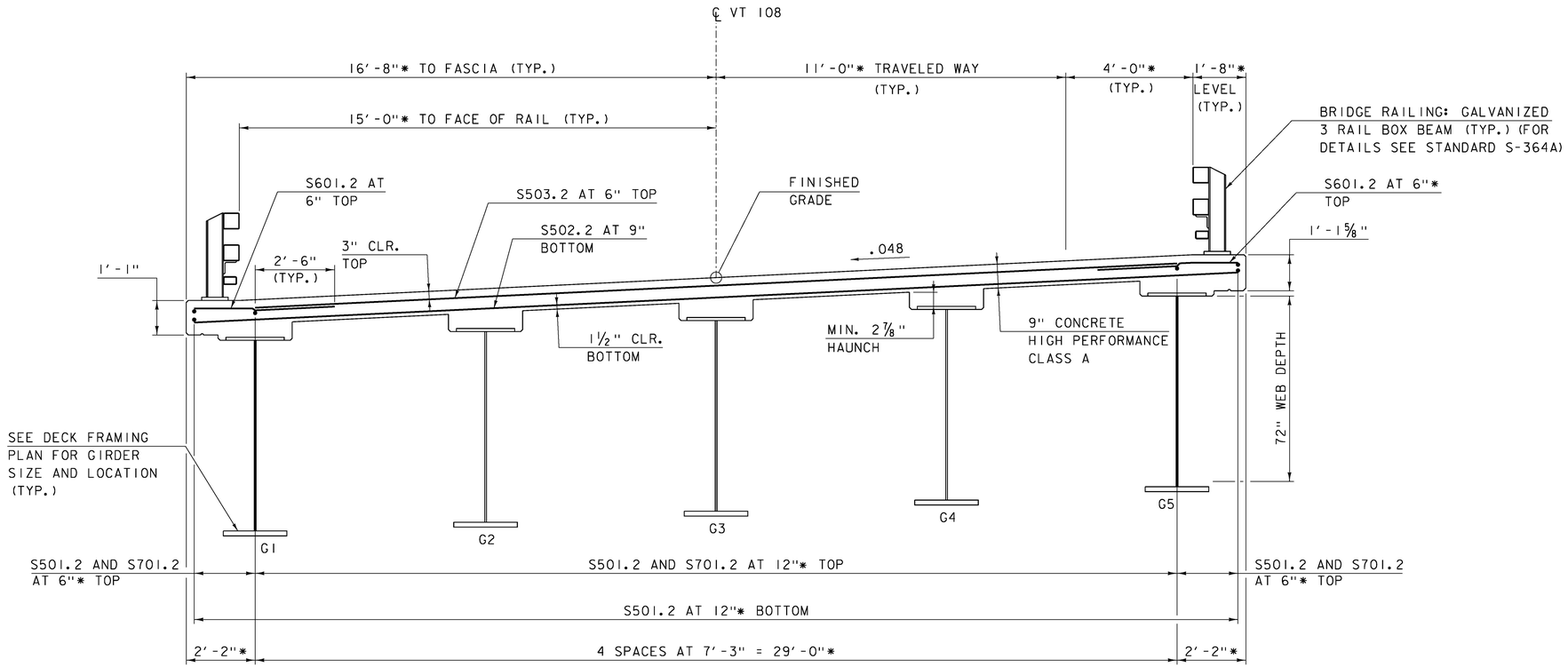

DECK TYPICAL

SCALE: 1/2" = 1′-0"

* RADIAL DIMENSION

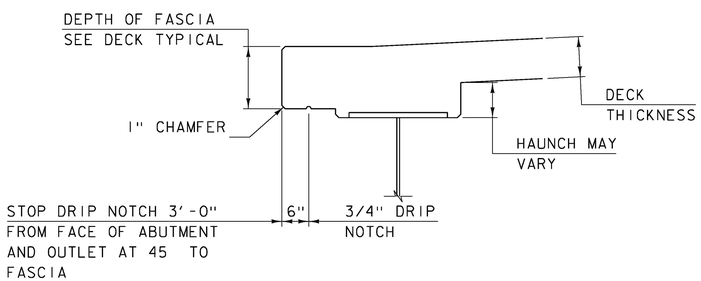

FASCIA & DRIP NOTCH DETAIL

SCALE: 3/8" = 1′-0"

CLD 12-0120 MODEL:Deck Reinforcement

PROJECT NAME:	STOWE
PROJECT NUMBER:	BRF 0235(15)
FILE NAME: z88cl90sup.dgn	PLOT DATE: 5/8/2015
PROJECT LEADER: J. BYATT	DRAWN BY: M. SMITH
DESIGNED BY: J. FRENCH	CHECKED BY: J. BYATT
TYPICAL BRIDGE SECTION	SHEET 35 OF 79

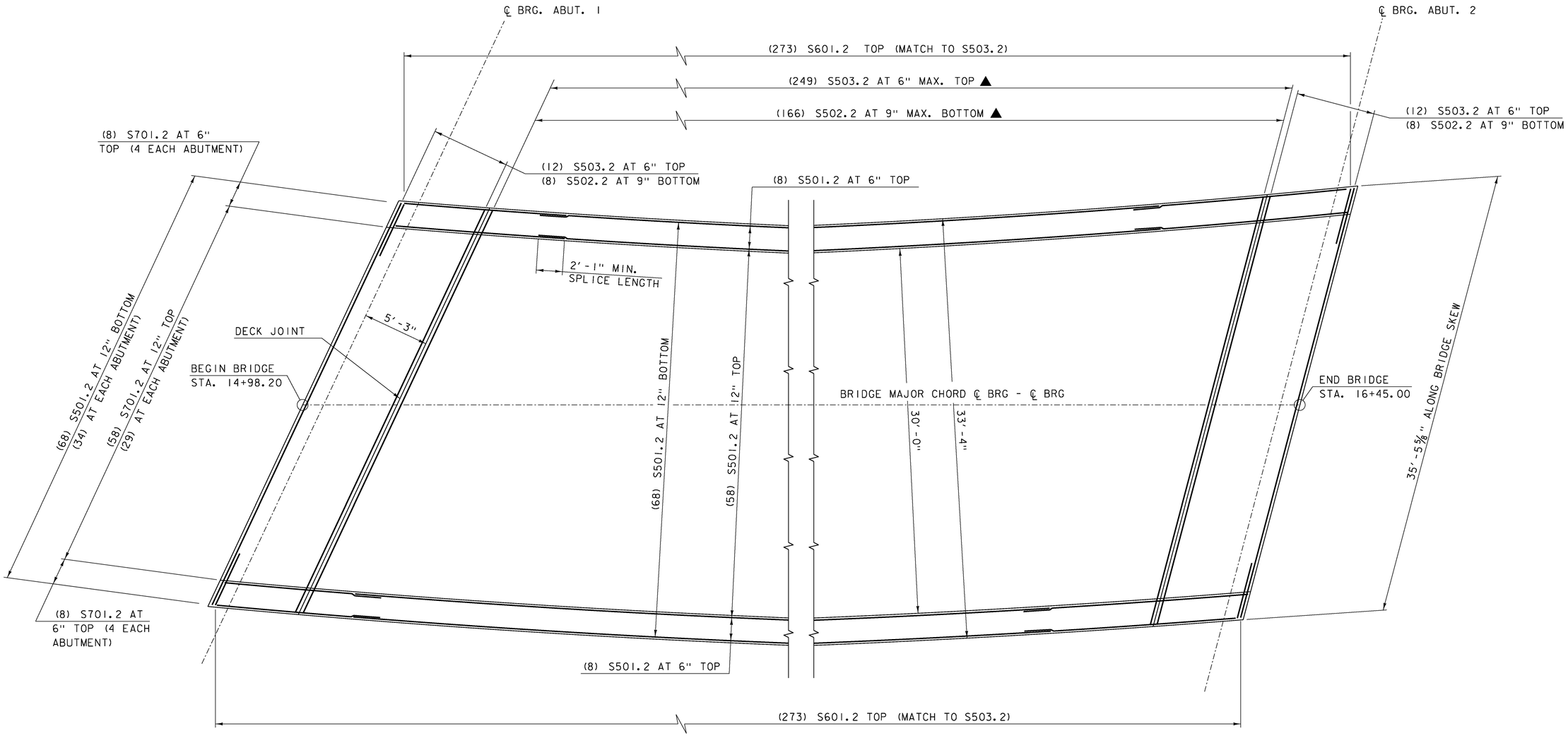

BRIDGE DECK REINFORCING PLAN

SCALE: 1/4" = 1'-0"

PROJECT NAME:	STOWE
PROJECT NUMBER:	BRF 0235(15)
FILE NAME: z88c190sup.dgn	PLOT DATE: 5/8/2015
PROJECT LEADER: J. BYATT	DRAWN BY: M. SMITH
DESIGNED BY: J. FRENCH	CHECKED BY: J. BYATT
DECK REINFORCING PLAN	SHEET 36 OF 79

CONSULTING ENGINEERS

CLD 12-020 MODEL: Deck Reinforcing Plan

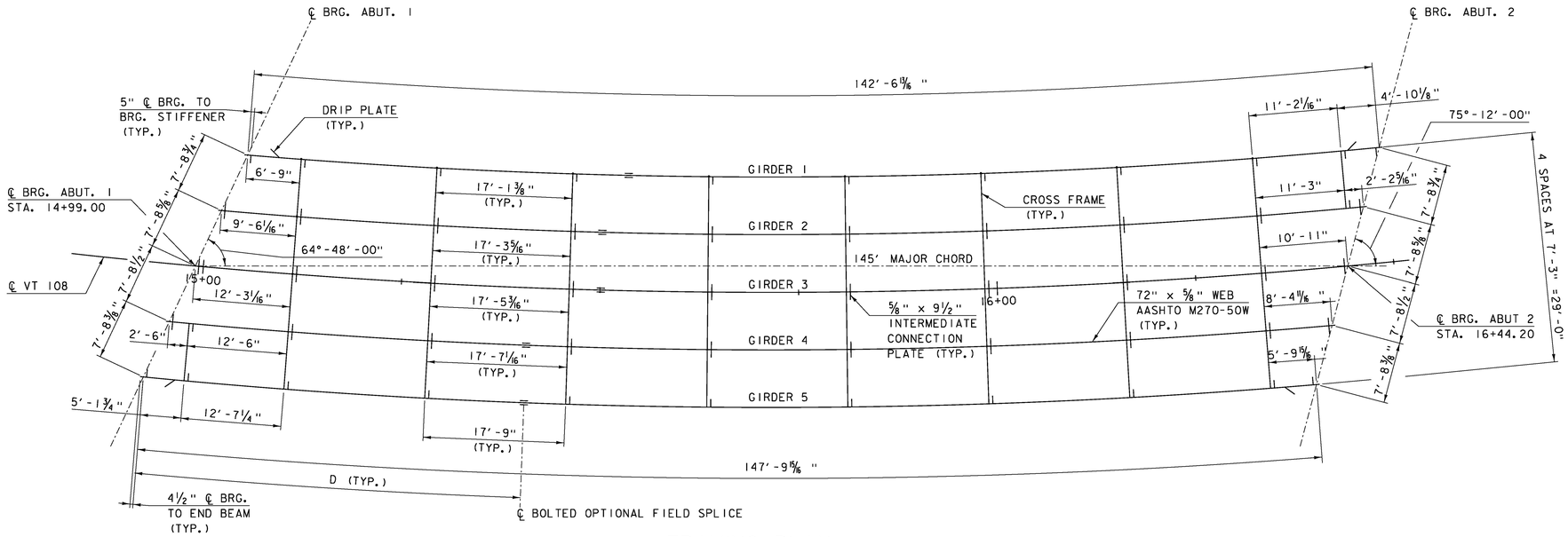

FRAMING PLAN

SCALE: 1/8" = 1′-0"

GIRDER	MAX SWEEP DISTANCE
G1	3′-2 13/16 "
G2	3′-3 1/8 "
G3	3′-3 1/2 "
G4	3′-3 7/8 "
G5	3′-4 1/4 "

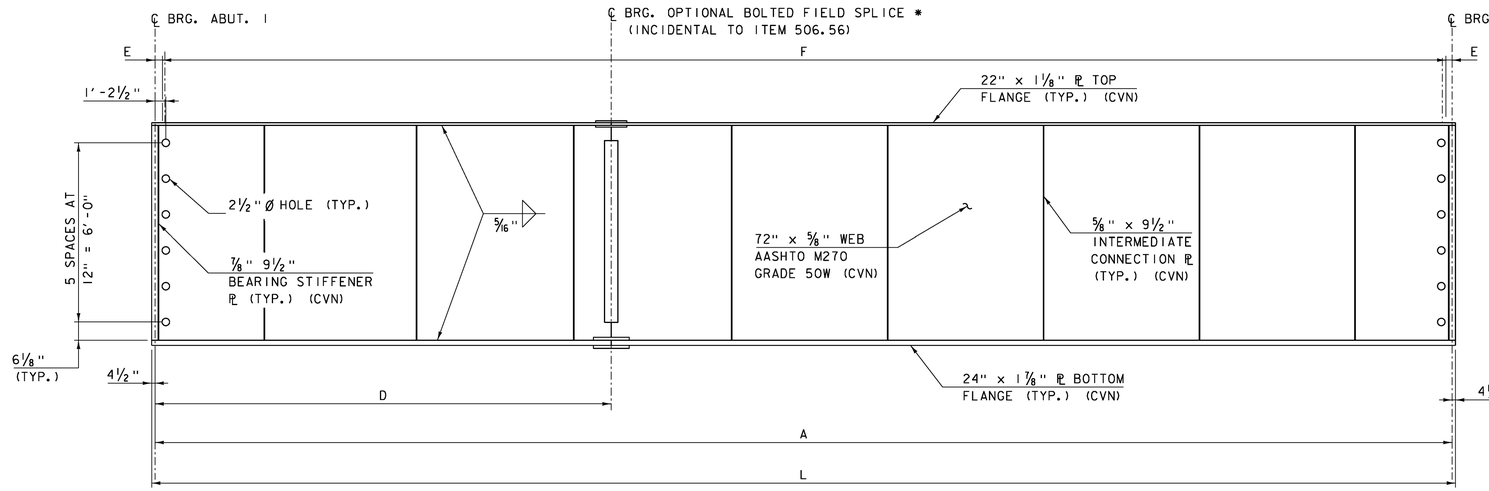

GIRDER ELEVATION

HORIZONTAL SCALE: 1/8" = 1′-0"
VERTICAL SCALE: 1/2" = 1′-0"

	GIRDER DIMENSIONS				SHEAR CONNECTOR SPACING		SHEAR CONNECTORS PER GIRDER
	A	L	D	RADIUS	E	F	
GIRDER 1	142.57′	143.32′	48′	785.50′	1 SP. AT 9 1/2" = 9 1/2"	117 SP. AT 15" = 146′-3"	240
GIRDER 2	143.88′	144.63′	48′	792.75′	1 SP. AT 9 1/8" = 9 1/8"	116 SP. AT 15" = 145′-0"	238
GIRDER 3	145.20′	145.95′	51′	800.00′	1 SP. AT 8 3/4" = 8 3/4"	115 SP. AT 15" = 143′-9"	236
GIRDER 4	146.51′	147.26′	45′	807.25′	1 SP. AT 8 1/4" = 8 1/4"	114 SP. AT 15" = 142′-6"	234
GIRDER 5	147.83′	148.58′	48′	814.50′	1 SP. AT 7 7/8" = 7 7/8"	113 SP. AT 15" = 141′-3"	232
							1180 TOTAL

* IF THE BOLTED FIELD SPLICE IS OMITTED THE GIRDER SHALL BE PROVIDED IN ONE CONTINUOUS LENGTH.

(2) ROWS OF 9" x 7/8" Ø WELDED STUDS SPACED ALONG FLANGE AND OF THE LENGTH (S) AS SHOWN ON THE PROJECT PLANS.

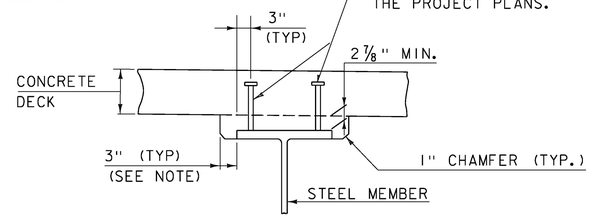

NOTES:

1. THE 3" HORIZONTAL SECTION MAY BE ELIMINATED FOR FORMING SYSTEMS DESIGNED FOR THE CONSTRUCTION OF VERTICAL HAUNCHES. ANY VOIDS RESULTING FROM FORMING SYSTEM ELEMENTS SHALL BE FILLED WITH JOINT SEALER, POLYURETHANE MEETING THE REQUIREMENTS OF SECTION 524. THE COST OF THE JOINT SEALER, POLYURETHANE SHALL BE INCIDENTAL TO THE ADJACENT CONCRETE.
2. SHEAR CONNECTORS AT THE FIELD SPLICE SHALL BE ARRANGED TO CLEAR FASTENERS AND SHALL BE WELDED TO THE SPLICE PLATE.

HAUNCH AND SHEAR CONNECTOR DETAIL

SCALE: 3/4" = 1′-0"

CLD 12-020 MODEL: Framing Plan

PROJECT NAME: STOWE
PROJECT NUMBER: BRF 0235(15)

FILE NAME: z88cl90sup.dgn
PROJECT LEADER: J. BYATT
DESIGNED BY: J. FRENCH
FRAMING PLAN AND DETAILS (1 OF 2)

PLOT DATE: 5/13/2015
DRAWN BY: M. SMITH
CHECKED BY: J. BYATT
SHEET 37 OF 79

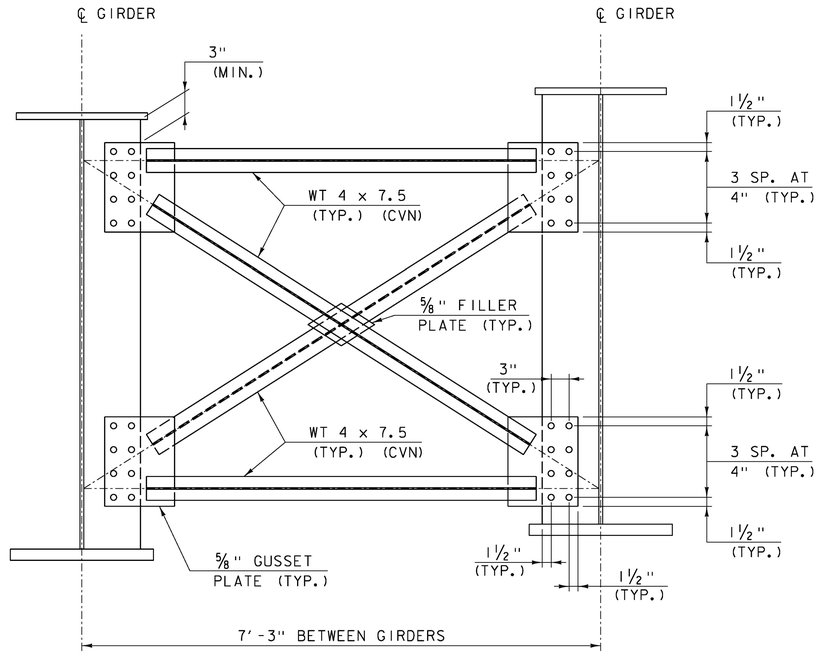

CROSS FRAME DETAIL

SCALE: 1" = 1'-0"

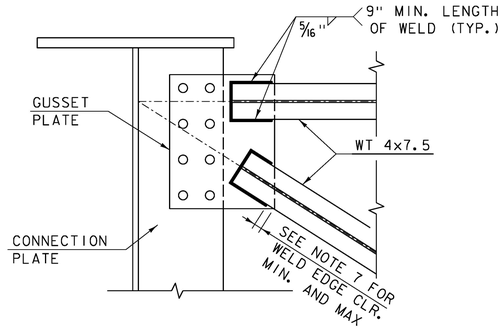

WT TO GUSSET PLATE WELD DETAIL

SCALE: 1½" = 1'-0"

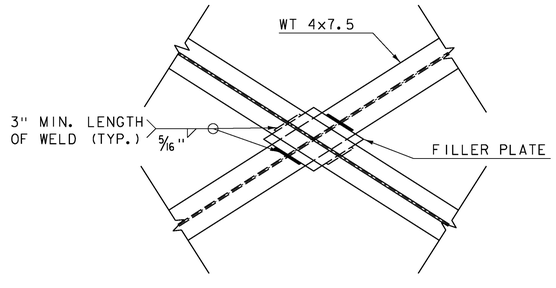

WT TO FILLER PLATE WELD DETAIL

SCALE: 1½" = 1'-0"

STRUCTURAL STEEL GENERAL NOTES:

1. ALL FIELD CONNECTIONS SHALL BE MADE WITH ⅞" DIAMETER HIGH-STRENGTH BOLTS IN 15/16 " DIAMETER HOLES, PER SUBSECTION 506.19, UNLESS OTHERWISE SPECIFIED.
2. ALL WELDING SHALL CONFORM TO THE PROVISIONS OF SUBSECTION 506.10.
3. ANY CONNECTIONS THAT ARE NOT DETAILED ON THE PLANS SHALL BE DETAILED BY THE FABRICATOR AND SUBMITTED TO THE STRUCTURES ENGINEER FOR APPROVAL.
4. STRUCTURAL STEEL MEMBERS DESIGNATED "CVN" IN THE PLANS SHALL BE CHARPY V-NOTCH TESTED IN ACCORDANCE WITH SUBSECTION 714.01 OF THE STANDARD SPECIFICATIONS.
5. ENDS OF GIRDERS ARE TO BE VERTICAL IN THEIR FINAL POSITION.
6. AFTER SUPERSTRUCTURE STEEL HAS BEEN ERECTED, ELEVATIONS ALONG THE TOP OF THE GIRDERS SHALL BE TAKEN AS DIRECTED BY THE RESIDENT ENGINEER FOR USE IN DETERMINING FINISHED GRADES.
7. NO WELD FOR ¼" MIN. - ½" MAX. DISTANCE FROM GUSSET PLATE EDGES.

CLD 12-020 MODEL: Superstructure Details

PROJECT NAME:	STOWE
PROJECT NUMBER:	BRF 0235(15)
FILE NAME: z88cl90sup.dgn	PLOT DATE: 5/8/2015
PROJECT LEADER: J. BYATT	DRAWN BY: M. SMITH
DESIGNED BY: J. FRENCH	CHECKED BY: J. BYATT
FRAMING PLAN AND DETAILS (2 OF 2)	SHEET 38 OF 79

CLD CONSULTING ENGINEERS

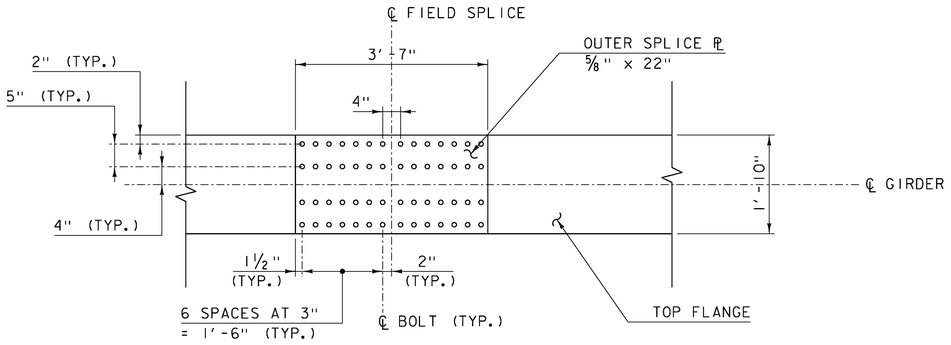

TOP FLANGE

SCALE: 3/4" = 1'-0"

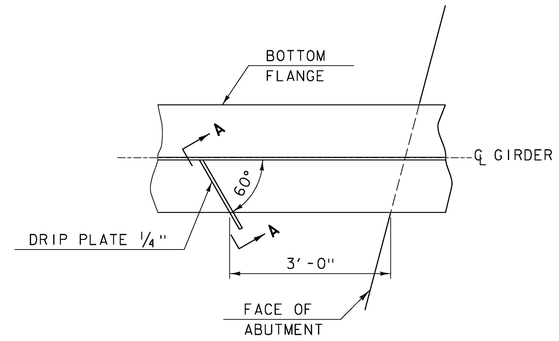

PLAN DRIP PLATE

SCALE: 3/4" = 1'-0"

NOTE: DRIP PLATES SHALL BE PLACED ON OUTSIDE EDGE OF FASCIA GIRDERS AS INDICATED ON PROJECT PLANS.

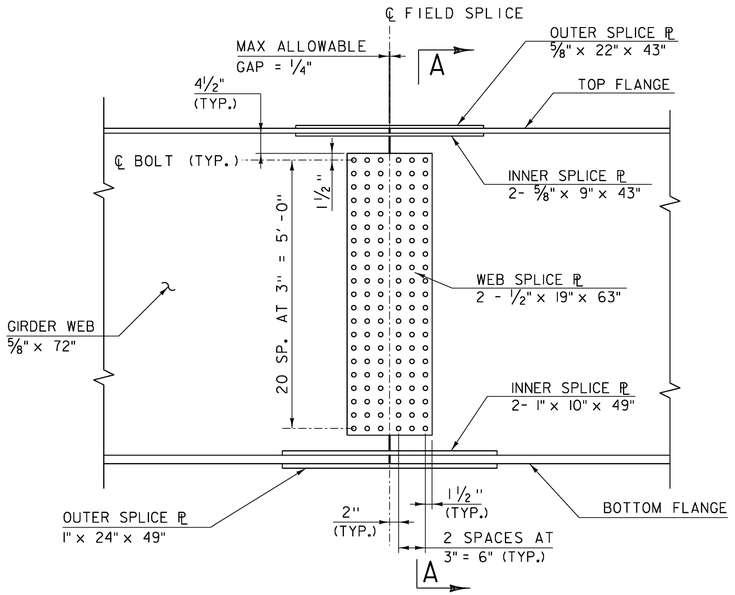

WEB SPLICE

SCALE: 3/4" = 1'-0"

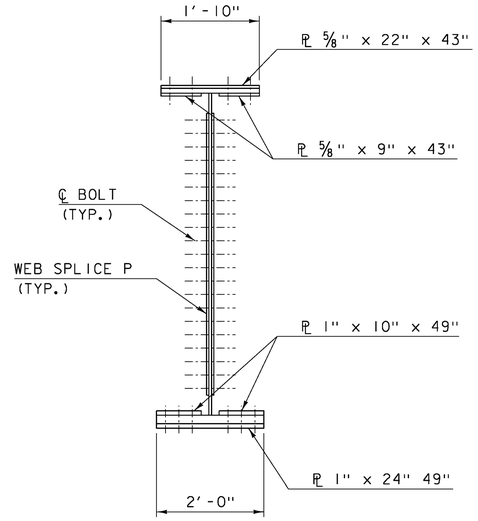

SECTION A-A

SCALE: 3/4" = 1'-0"

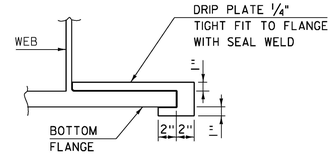

SECTION A-A

SCALE: 1 1/2" = 1'-0"

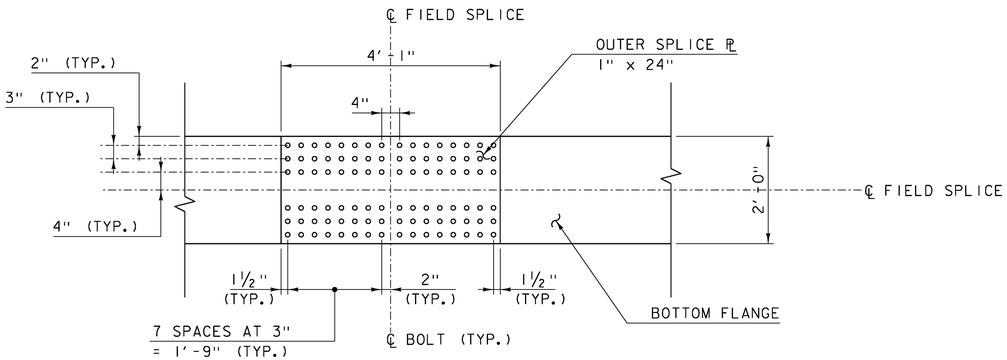

BOTTOM FLANGE

SCALE: 3/4" = 1'-0"

NOTE: BOLTED FIELD SPLICE IS OPTIONAL AND SHALL BE INCIDENTAL TO ITEM 506.56. IF THE BOLTED FIELD SPLICE IS OMITTED THE GIRDER SHALL BE PROVIDED IN ONE CONTINUOUS LENGTH.

CLD 12-020 MODEL: Splice Details

PROJECT NAME: STOWE	
PROJECT NUMBER: BRF 0235(15)	
FILE NAME: z88cl90sup.dgn	PLOT DATE: 5/13/2015
PROJECT LEADER: J. BYATT	DRAWN BY: M. SMITH
DESIGNED BY: J. FRENCH	CHECKED BY: J. BYATT
SPLICE DETAILS	SHEET 39 OF 79

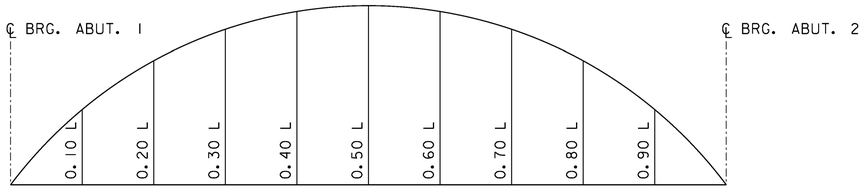

CAMBER DIAGRAM

SEE TABLES BELOW

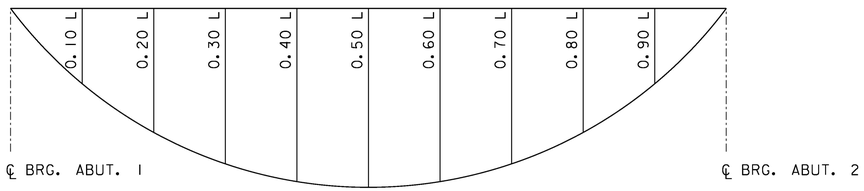

DEAD LOAD DEFLECTION DIAGRAM

SEE TABLES BELOW

		CAMBER TABLE AT 1/10TH POINTS (INCHES)								
POINT ON GIRDER		0.10L	0.20L	0.30L	0.40L	0.50L	0.60L	0.70L	0.80L	0.90L
GIRDER 1	STEEL DL	0	1/2	3/4	7/8	1	7/8	12/16	4/8	0
	CONCRETE SLAB DL	9/16	1	1 3/8	1 5/8	1 3/4	1 5/8	1 7/16	1	9/16
	SUPERIMPOSED DL	0	0	0	0	0	0	0	0	0
	VERTICAL CURVE	1 13/16	3 3/16	4 3/16	4 13/16	5	4 13/16	4 1/4	3 3/16	1 13/16
	TOTAL CAMBER	2 5/8	5	6 3/8	7 3/8	7 11/16	7 3/8	6 3/8	5	2 5/8
GIRDER 2	STEEL DL	0	3/4	15/16	1	1 1/4	1	15/16	5/8	0
	CONCRETE SLAB DL	3/4	1 3/8	1 7/8	2 3/16	2 1/2	2 3/16	1 7/8	1 5/16	11/16
	SUPERIMPOSED DL	0	0	0	0	0	0	0	0	0
	VERTICAL CURVE	1 13/16	3 3/16	4 3/16	4 13/16	5	4 13/16	4 3/16	3 3/16	1 13/16
	TOTAL CAMBER	2 7/8	5 1/2	7	8	8 2/4	8	7	5 1/2	2 14/16
GIRDER 3	STEEL DL	0	7/8	1 3/16	1 1/4	1 2/4	1 1/4	1 2/16	7/8	7/16
	CONCRETE SLAB DL	7/8	1 3/4	2 1/4	2 1/2	2 13/16	2 1/2	2 2/8	1 3/4	7/8
	SUPERIMPOSED DL	0	0	0	0	0	0	0	0	0
	VERTICAL CURVE	1 13/16	3 3/16	4 3/16	4 13/16	5	4 13/16	4 3/16	3 3/16	1 13/16
	TOTAL CAMBER	3 3/16	5 13/16	7 3/4	8 15/16	9 5/16	8 15/16	7 11/16	5 3/4	3 1/8
GIRDER 4	STEEL DL	9/16	1	1 7/16	1 3/4	1 3/4	1 3/4	1 3/8	1	9/16
	CONCRETE SLAB DL	1 1/16	2	2 3/4	3	3 3/8	3	2 3/4	2	1 1/16
	SUPERIMPOSED DL	0	0	0	0	0	0	0	0	0
	VERTICAL CURVE	1 13/16	3 3/16	4 3/16	4 13/16	5	4 13/16	4 3/16	3 3/16	1 13/16
	TOTAL CAMBER	3 7/16	6 5/16	8 7/16	9 3/4	10 1/4	9 3/4	8 7/16	6 1/4	3 7/16
GIRDER 5	STEEL DL	11/16	1 1/4	1 3/4	2	2 1/8	2	1 3/4	1 1/4	11/16
	CONCRETE SLAB DL	1 1/4	2 1/4	3 1/4	3 13/16	4 1/16	3 7/8	3 5/16	2 1/2	1 1/4
	SUPERIMPOSED DL	0	0	0	0	0	0	0	0	0
	VERTICAL CURVE	1 13/16	3 3/16	4 3/16	4 13/16	5	4 13/16	4 3/16	3 3/16	1 13/16
	TOTAL CAMBER	3 3/4	6 7/8	9 1/4	10 3/4	11 1/4	10 3/4	9 1/4	6 15/16	3 3/4

CLD 12-020 MODEL: Camber Diagram

CONSULTING ENGINEERS

PROJECT NAME: STOWE
PROJECT NUMBER: BRF 0235(15)

FILE NAME: z88cl90sup.dgn
PROJECT LEADER: J. BYATT
DESIGNED BY: J. FRENCH
CAMBER AND DEFLECTION DETAILS

PLOT DATE: 5/8/2015
DRAWN BY: M. SMITH
CHECKED BY: J. BYATT
SHEET 40 OF 79

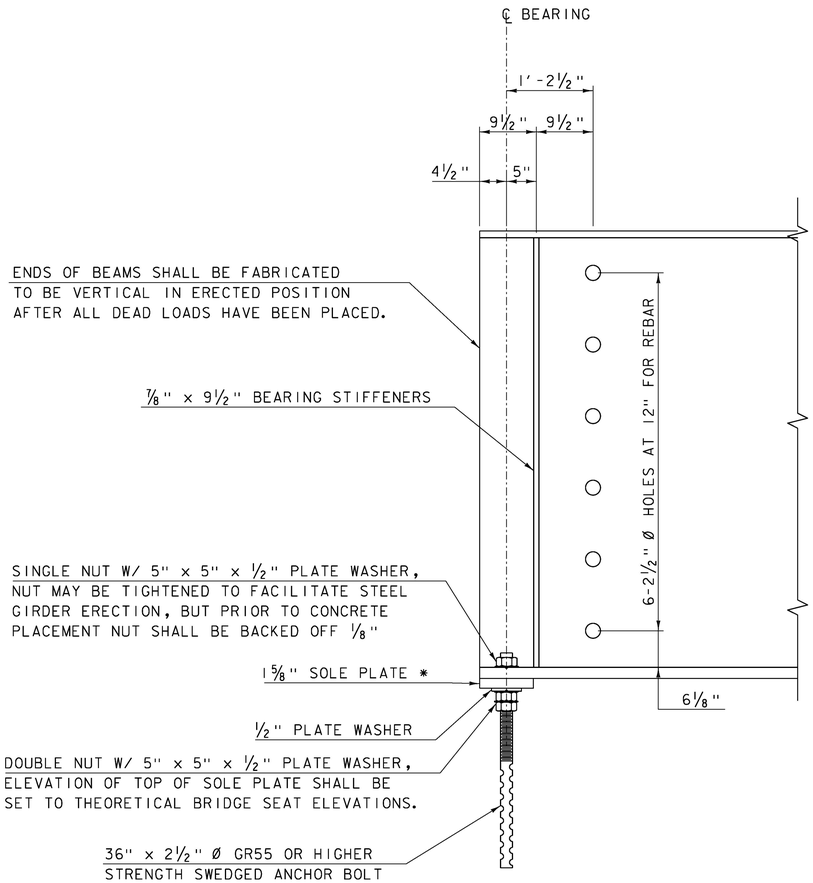

ELEVATION VIEW END OF STEEL MEMBER AT ABUTMENT

SCALE: 1" = 1'-0"

NOTES:

1. PAYMENT FOR THE SOLE PLATES, ANCHOR BOLTS, WASHERS AND NUTS SHALL BE INCIDENTAL TO ITEM 506.56, STRUCTURAL STEEL, CURVED PLATE GIRDER.
2. ANCHOR BOLTS SHALL BE 2½" DIAMETER, TYPE 1 BOLTS MEETING ASTM F1554, GR. 55. NUTS SHALL MEET AASHTO M291, THE CONTRACTOR SHALL ENSURE THAT THE ANCHOR BOLTS ARE INSTALLED IN PLUMB POSITION. ONE EXTRA ANCHOR BOLT SHALL BE SUPPLIED FOR TESTING PURPOSES.
3. ALL STEEL IN BEARING DEVICE ASSEMBLY SHALL BE AASHTO M270M/M270 GR 50.
4. SUBSTITUTIONS FOR BEARING DEVICE ASSEMBLY COMPONENT MATERIALS AND SIZES SHALL BE DETAILED ON THE FABRICATION DRAWINGS. ALL SUBSTITUTIONS SHALL BE APPROVED BY THE PROJECT MANAGER PRIOR TO FABRICATION AS PER SUBSECTION 506.04.

THEORETICAL TOP OF SOLE PLATE ELEVATION		
	ABUTMENT #1	ABUTMENT #2
GIRDER 1	739.66	738.12
GIRDER 2	740.01	738.53
GIRDER 3	740.35	738.93
GIRDER 3	740.69	739.34
GIRDER 4	741.04	739.74

* GREASE TOP OF SOLE PLATE BEFORE GIRDER PLACEMENT

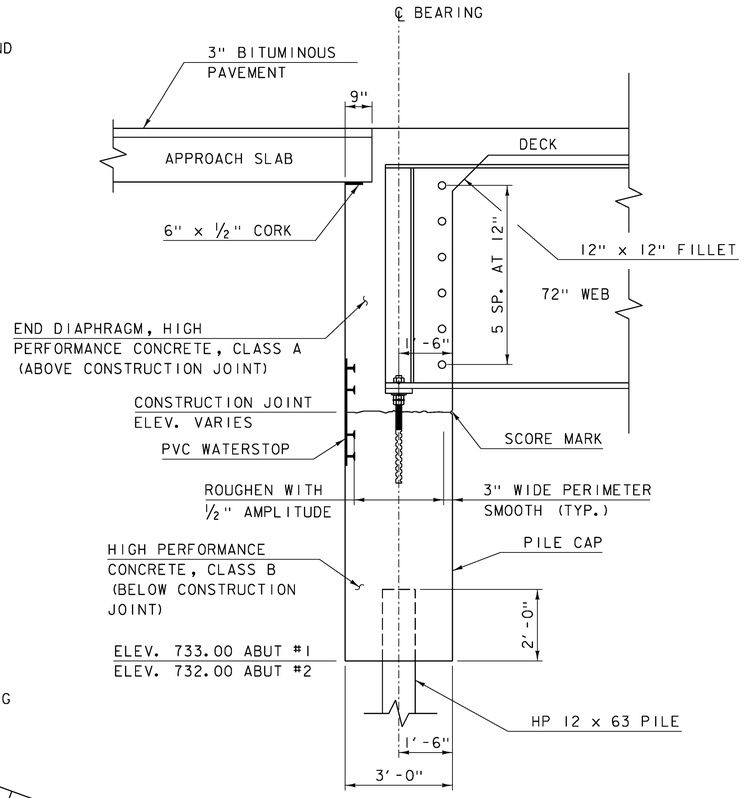

BRIDGE END DETAIL AND ABUTMENT TYPICAL SECTION

SCALE: ½" = 1'-0"

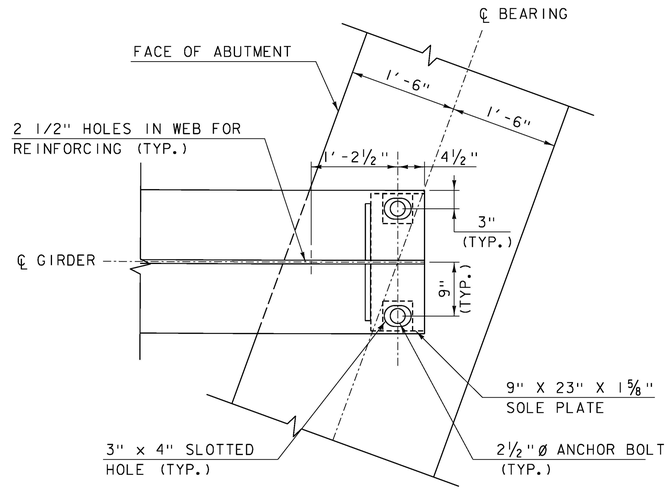

PLAN VIEW, END OF STEEL AT ABUTMENT 2

REVERSE GIRDER FOR ABUTMENT 1
SCALE: 1" = 1'-0"

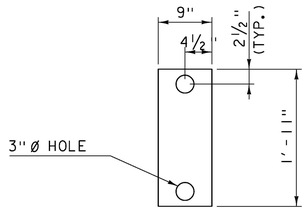

15/8" SOLE PLATE DETAIL

SCALE: 1" = 1'-0"

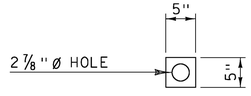

1/ 2" PLATE WASHER DETAIL

SCALE: 1" = 1'-0"

CLD 12-0120 MODEL: Bearing Details

PROJECT NAME:	STOWE
PROJECT NUMBER:	BRF 0235(15)
FILE NAME: z88cl90sup.dgn	PLOT DATE: 5/8/2015
PROJECT LEADER: J. BYATT	DRAWN BY: M. SMITH
DESIGNED BY: J. FRENCH	CHECKED BY: J. BYATT
BEARING DETAILS	SHEET 41 OF 79

CONSULTING ENGINEERS

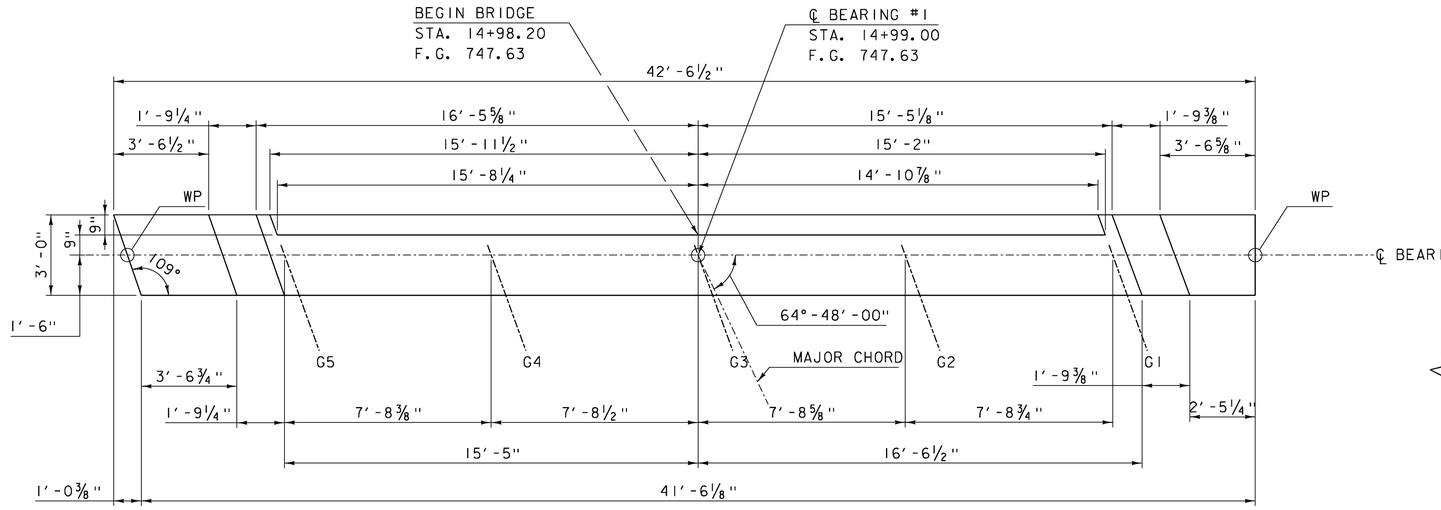

ABUTMENT #1 PLAN

SCALE: ⅜" = 1'-0"

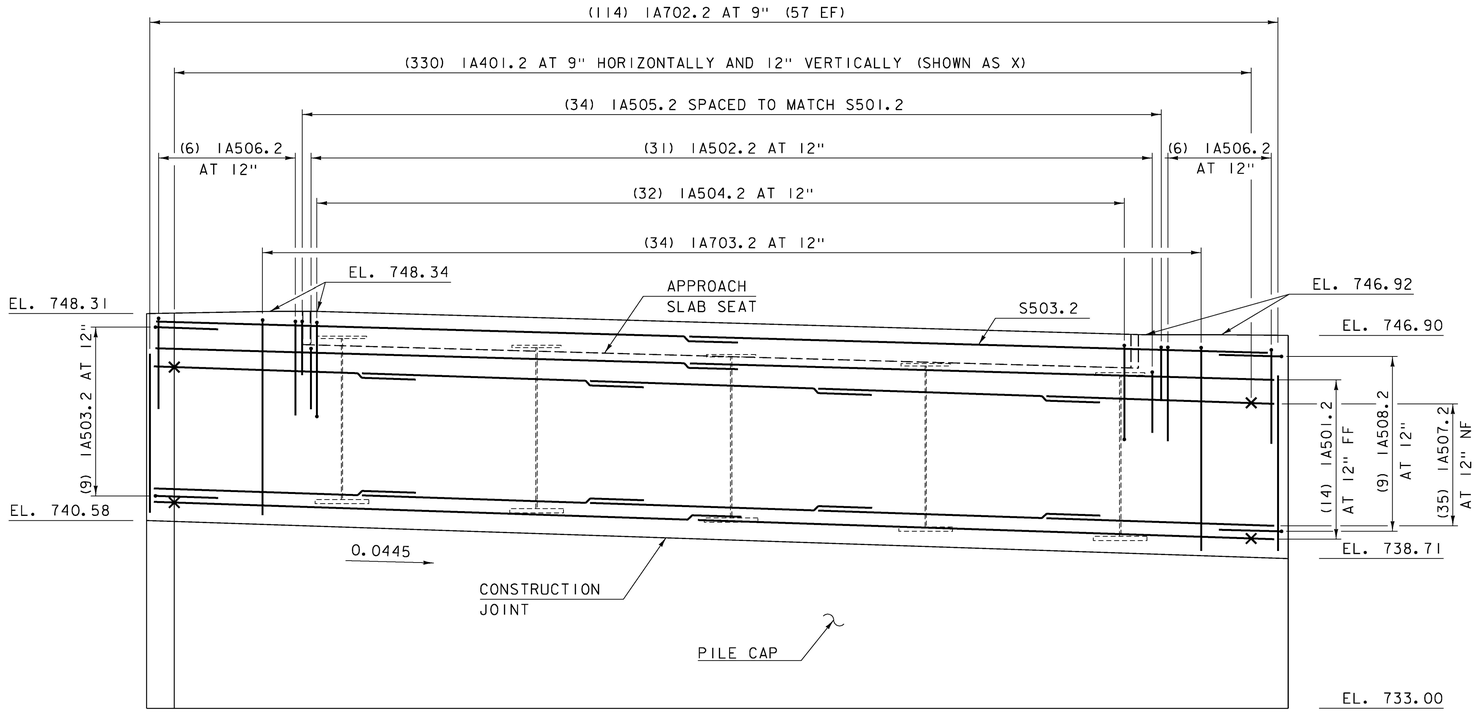

ABUTMENT #1 ELEVATION

SCALE: ⅜" = 1'-0"

NOTE: ELEVATIONS SHOWN ARE AT ℄ OF BEARING.

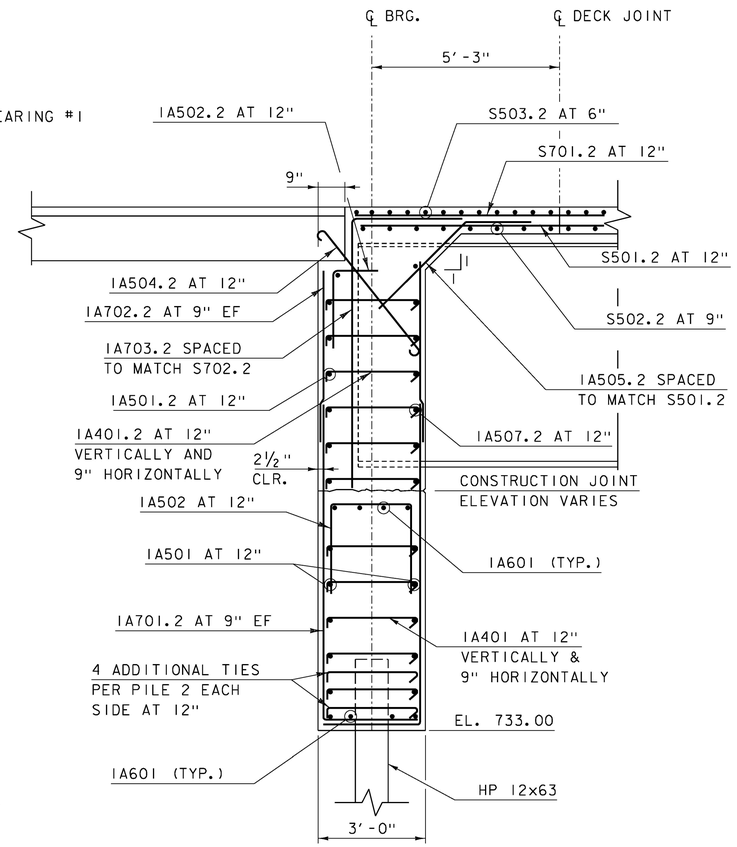

ABUTMENT #1 TYPICAL REBAR SECTION

SCALE: ½" = 1'-0"

NOTE:

NF = NEAR FACE
FF = FAR FACE
EF = EACH FACE
▲ = CUT TO FIT IN FIELD
X = LATERAL TIES
3" CLEAR, UNLESS OTHERWISE SPECIFIED ON THE PLANS.
2' - 2" BAR LAP UNLESS OTHERWISE SPECIFIED ON THE PLANS

CLD 12-020 MODEL: ABUTMENT 1

PROJECT NAME: STOWE
PROJECT NUMBER: BRF 0235(15)

FILE NAME: z88cl90sub.dgn
PROJECT LEADER: J. BYATT
DESIGNED BY: J. FRENCH
ABUTMENT 1 PLAN AND ELEVATION

PLOT DATE: 5/8/2015
DRAWN BY: M. SMITH
CHECKED BY: J. BYATT
SHEET 42 OF 79

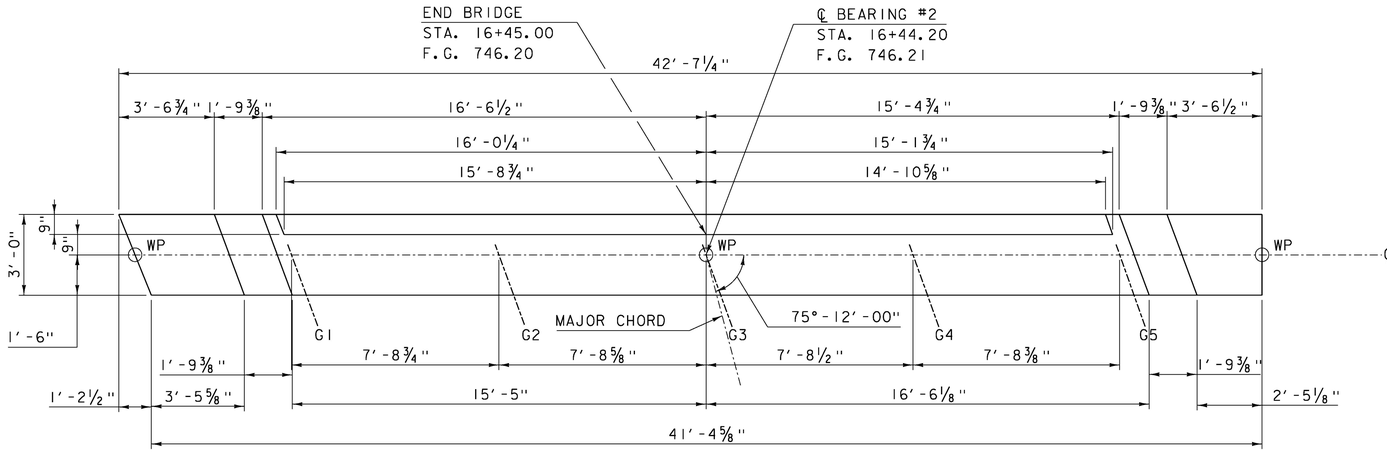

ABUTMENT #2 PLAN

SCALE: ⅜" = 1'-0"

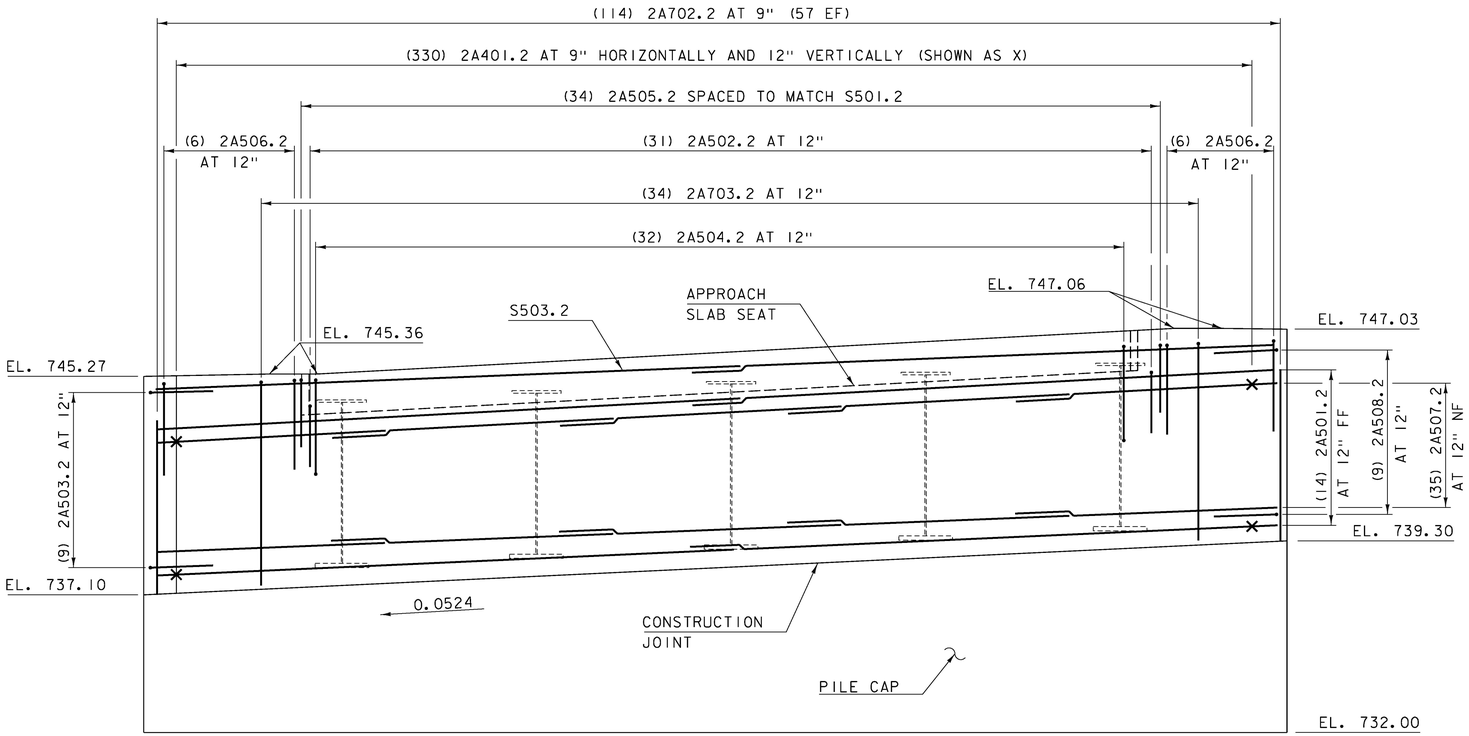

ABUTMENT #2 ELEVATION

SCALE: ⅜" = 1'-0"

NOTE: ELEVATIONS SHOWN ARE AT ℄ OF BEARING.

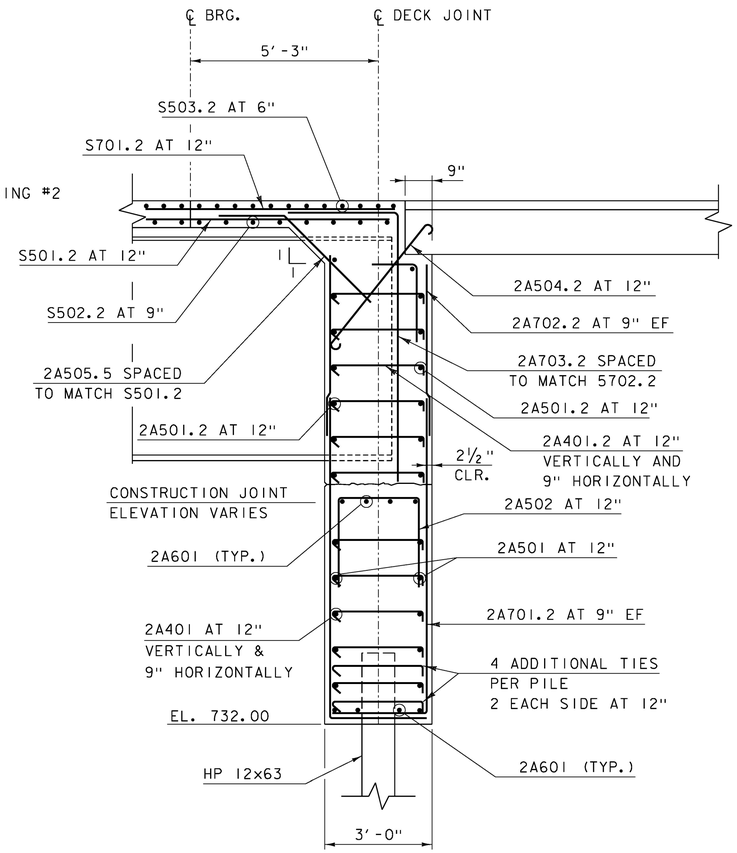

ABUTMENT #2 TYPICAL REBAR SECTION

SCALE: ½" = 1'-0"

NOTE:

NF = NEAR FACE
FF = FAR FACE
EF = EACH FACE
▲ = CUT TO FIT IN FIELD
X = LATERAL TIES
3" CLEAR, UNLESS OTHERWISE SPECIFIED ON THE PLANS.
2' - 2" BAR LAP UNLESS OTHERWISE SPECIFIED ON THE PLANS

CONSULTING ENGINEERS

PROJECT NAME: STOWE	
PROJECT NUMBER: BRF 0235(15)	
FILE NAME: z88cl90sub.dgn	PLOT DATE: 5/8/2015
PROJECT LEADER: J. BYATT	DRAWN BY: M. SMITH
DESIGNED BY: J. FRENCH	CHECKED BY: J. BYATT
ABUTMENT 2 PLAN AND ELEVATION	SHEET 43 OF 79

CLD 12-020 MODEL: ABUTMENT 2

NOTE:

SEE PROJECT NOTES FOR ADDITIONAL FABRICATION, CONSTRUCTION, AND SEQUENCE NOTES.

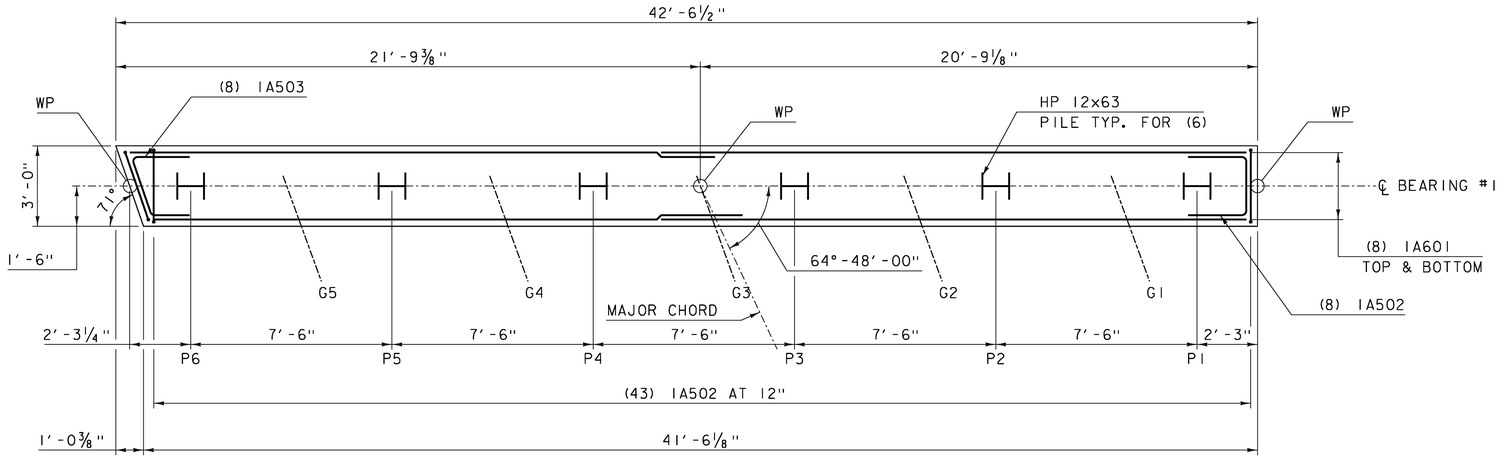

ABUTMENT #1 PILE CAP PLAN

SCALE: ⅜" = 1′-0"

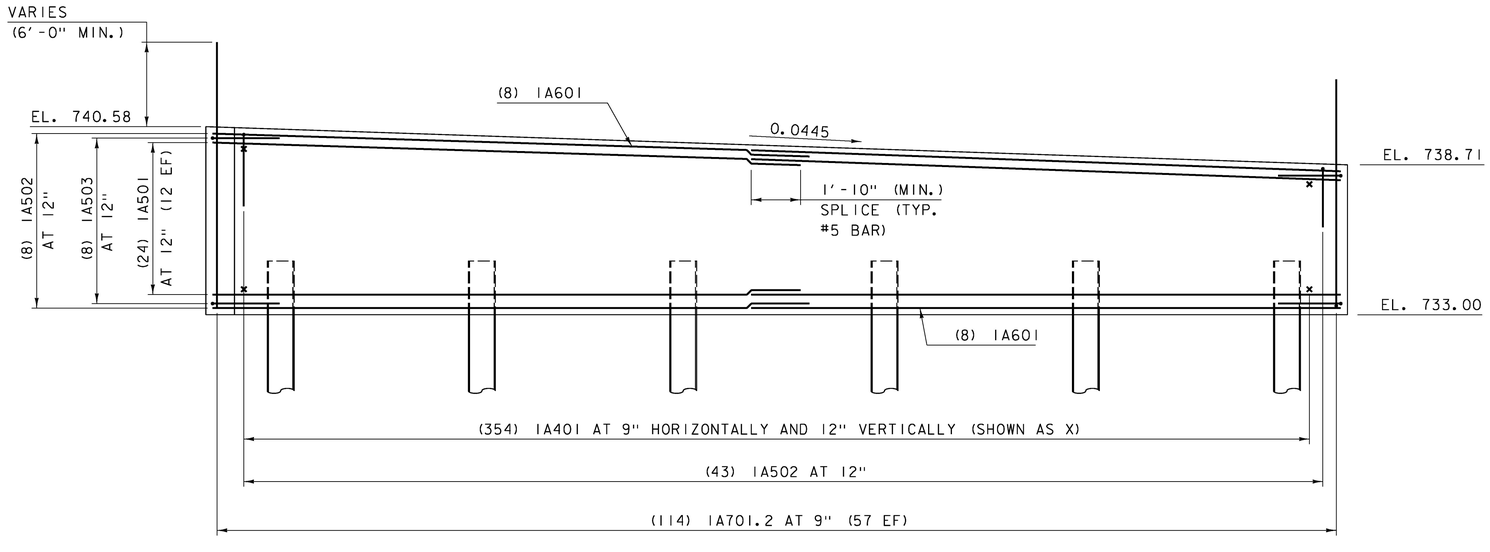

ABUTMENT #1 PILE CAP ELEVATION

SCALE: ⅜" = 1′-0"

NOTE:

NF = NEAR FACE
FF = FAR FACE
EF = EACH FACE
▲ = CUT TO FIT IN FIELD
3" CLEAR, UNLESS OTHERWISE SPECIFIED ON THE PLANS.
2′ - 2" BAR LAP UNLESS OTHERWISE SPECIFIED ON THE PLANS
X = LATERAL TIE

PROJECT NAME:	STOWE
PROJECT NUMBER:	BRF 0235(15)

FILE NAME: z88c190sub.dgn	PLOT DATE: 5/8/2015
PROJECT LEADER: J. BYATT	DRAWN BY: M. SMITH
DESIGNED BY: J. FRENCH	CHECKED BY: J. BYATT
ABUTMENT 1 PILE CAP PLAN AND ELEVATION	SHEET 44 OF 79

CLD 12-0120 MODEL: PILE CAP 1

NOTE:

SEE PROJECT NOTES FOR ADDITIONAL FABRICATION, CONSTRUCTION, AND SEQUENCE NOTES.

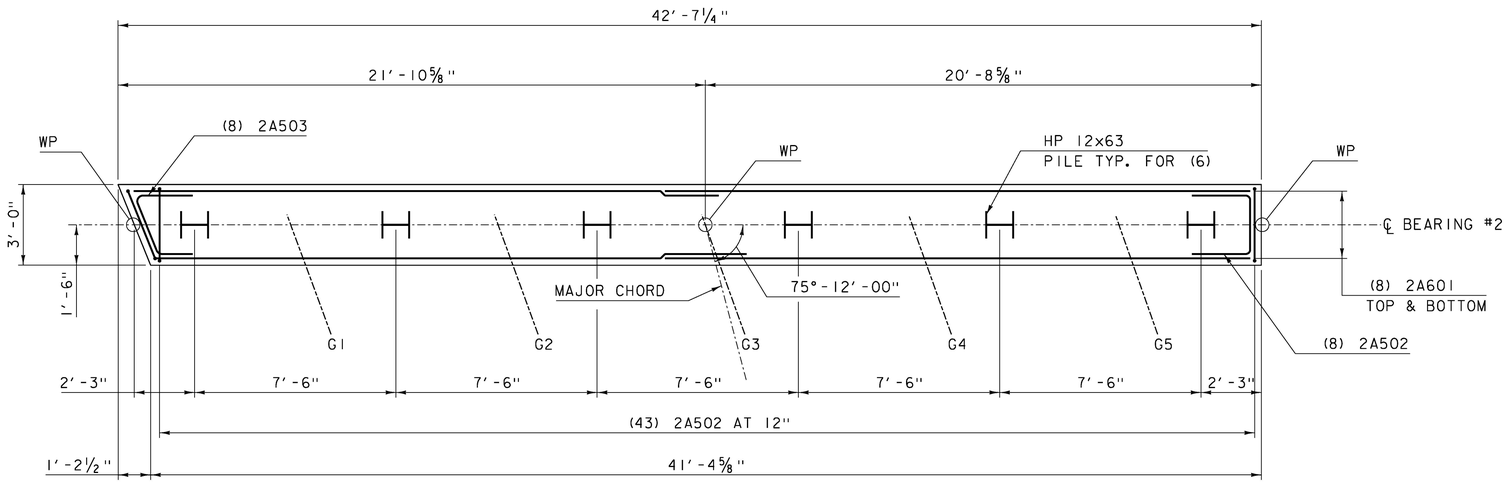

ABUTMENT #2 PILE CAP PLAN

SCALE: ⅜" = 1'-0"

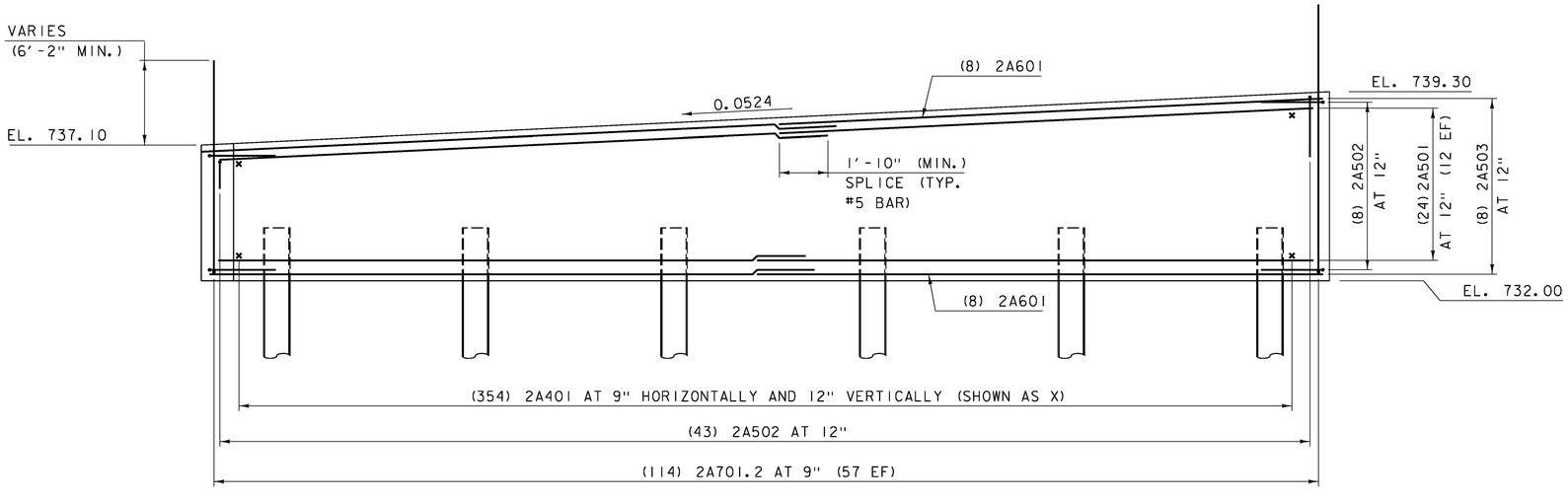

ABUTMENT #2 PILE CAP ELEVATION

SCALE: ⅜" = 1'-0"

NOTE:

NF = NEAR FACE
FF = FAR FACE
EF = EACH FACE
▲ = CUT TO FIT IN FIELD
3" CLEAR, UNLESS OTHERWISE SPECIFIED ON THE PLANS.
2' - 2" BAR LAP UNLESS OTHERWISE SPECIFIED ON THE PLANS
X = LATERAL TIE

PROJECT NAME:	STOWE
PROJECT NUMBER:	BRF 0235(15)

FILE NAME: z88cl90sub.dgn	PLOT DATE: 5/8/2015
PROJECT LEADER: J. BYATT	DRAWN BY: M. SMITH
DESIGNED BY: J. FRENCH	CHECKED BY: J. BYATT
ABUTMENT 2 PILE CAP PLAN AND ELEVATION	SHEET 45 OF 79

CLD 12-0120 MODEL: PILE CAP 2

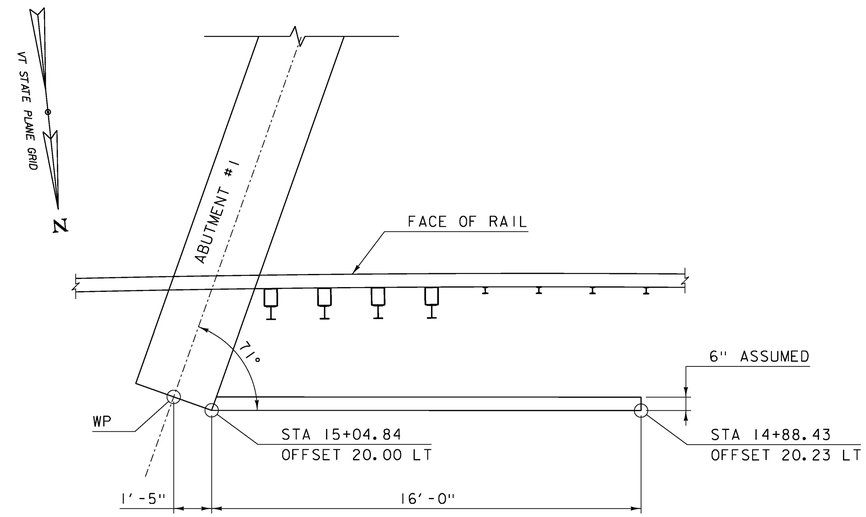

WINGWALL 1 PLAN VIEW

SCALE: 3/8" = 1'-0"

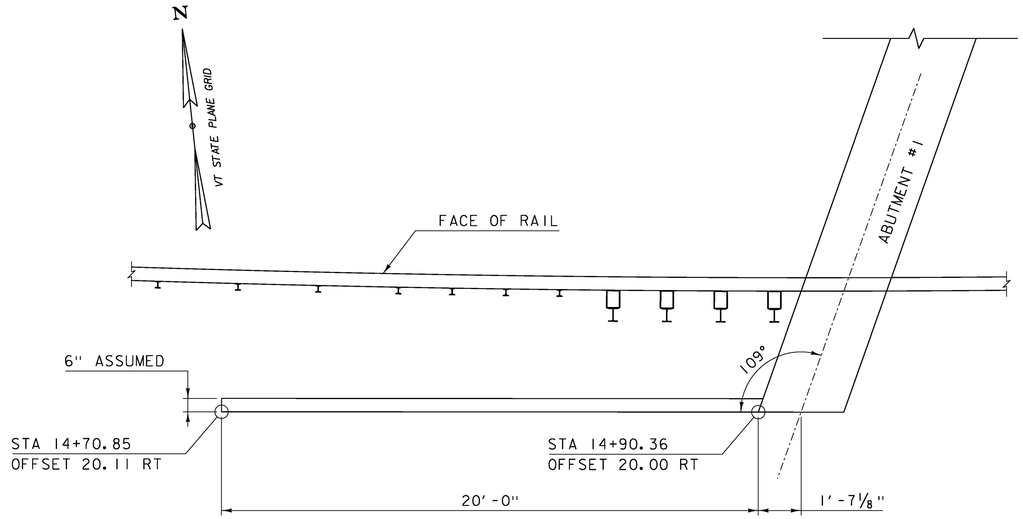

WINGWALL 2 PLAN VIEW

SCALE: 3/8" = 1'-0"

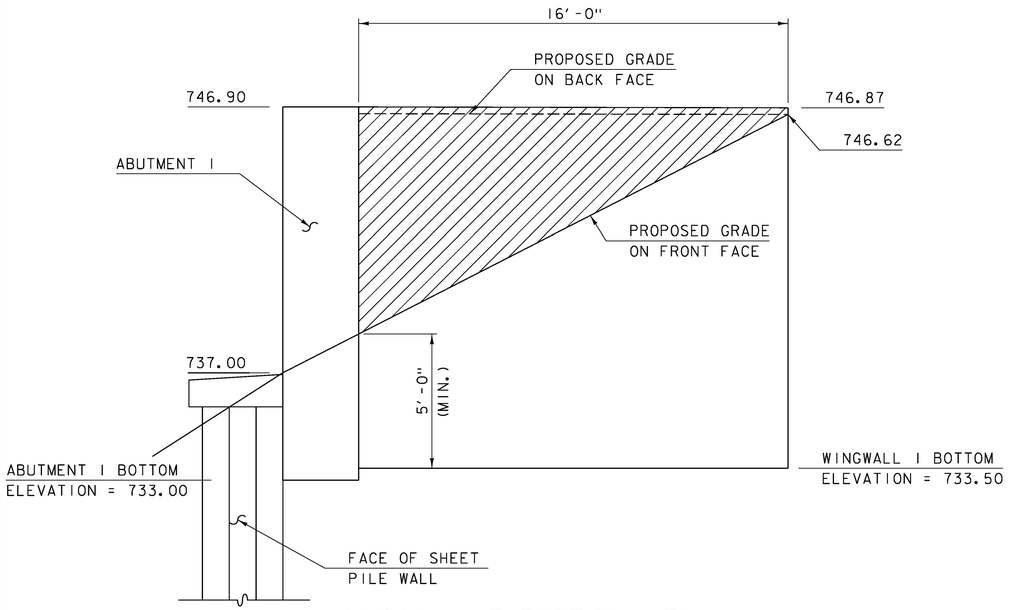

WINGWALL 1 ELEVATION VIEW

SCALE: 3/8" = 1'-0"

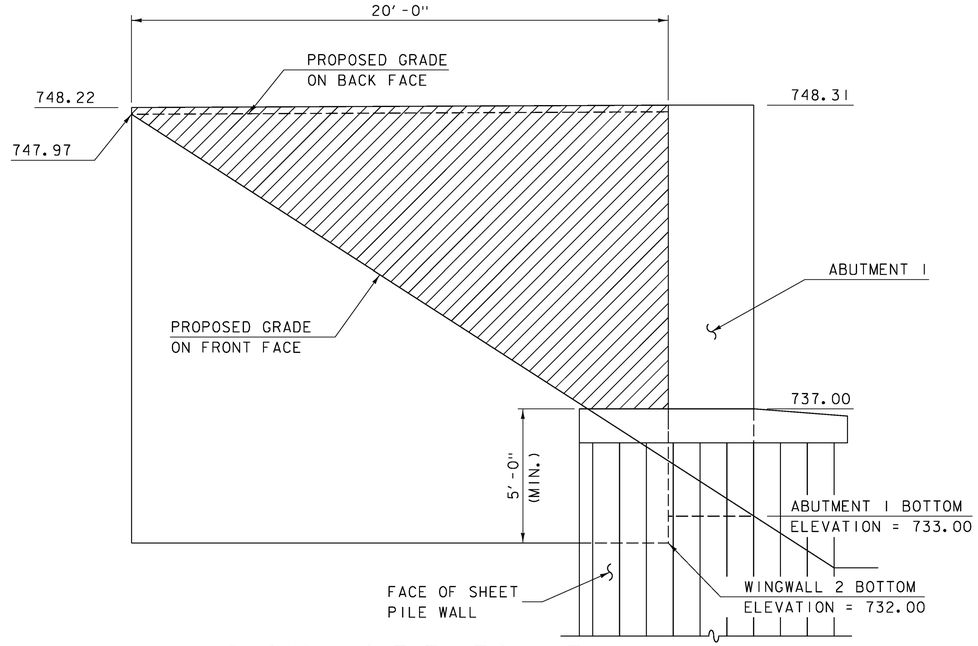

WINGWALL 2 ELEVATION VIEW

SCALE: 3/8" = 1'-0"

PAY LIMITS OF 900.670
"SPECIAL PROVISION
(RETAINING WALL)"

PROJECT NAME:	STOWE
PROJECT NUMBER:	BRF 0235(15)
FILE NAME: z88c190sub.dgn	PLOT DATE: 5/8/2015
PROJECT LEADER: J. BYATT	DRAWN BY: M. SMITH
DESIGNED BY: J. FRENCH	CHECKED BY: J. BYATT
WINGWALL PLAN AND ELEVATION (1 OF 2)	SHEET 46 OF 79

CLD 12-0120 MODEL: WINGWALL 1 AND 2

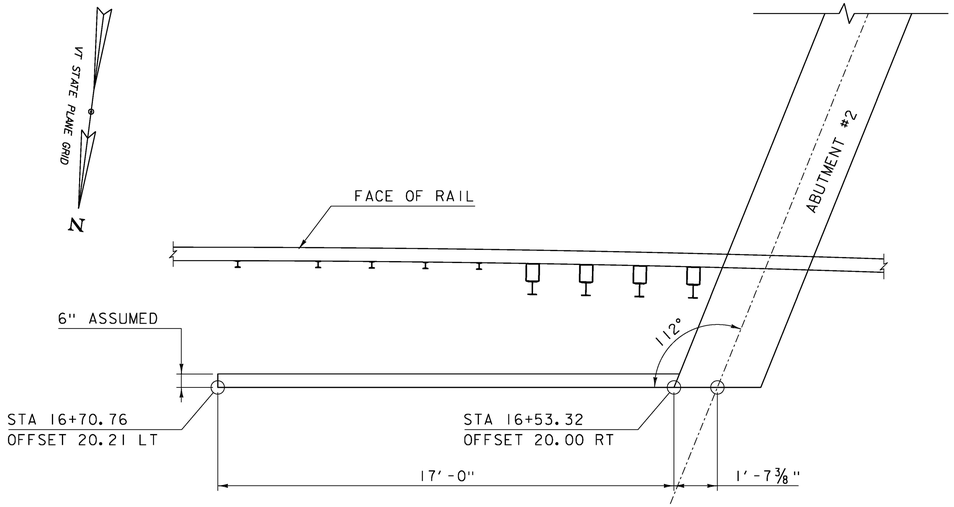

WINGWALL 3 PLAN VIEW

SCALE: ⅜" = 1'-0"

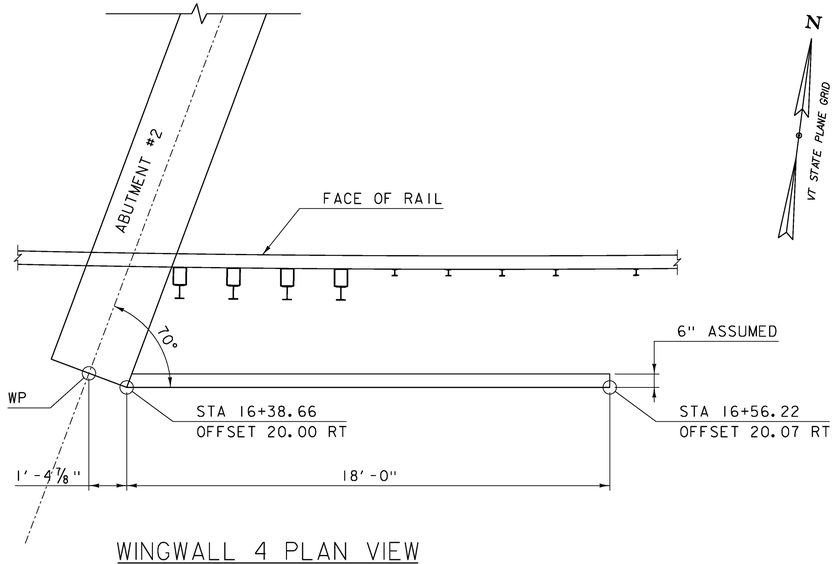

WINGWALL 4 PLAN VIEW

SCALE: ⅜" = 1'-0"

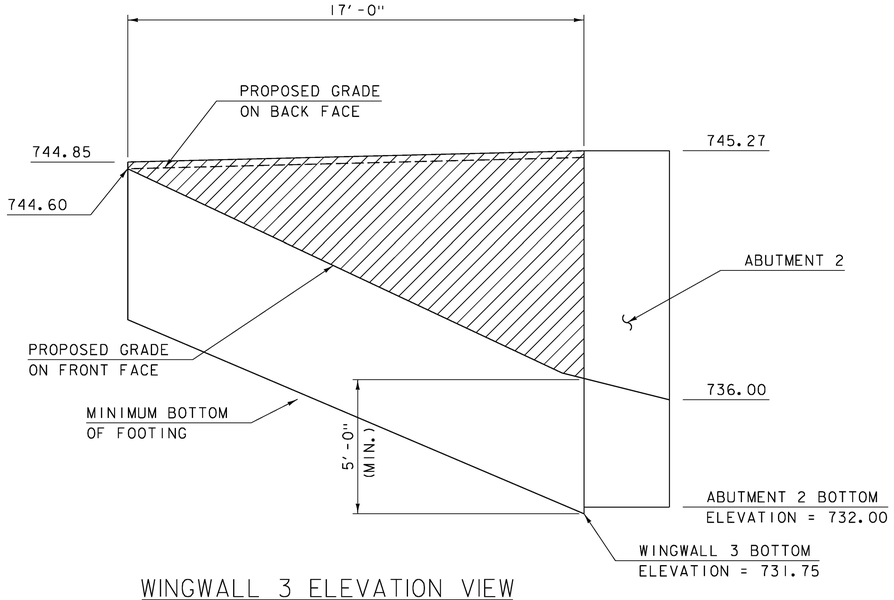

WINGWALL 3 ELEVATION VIEW

SCALE: ⅜" = 1'-0"

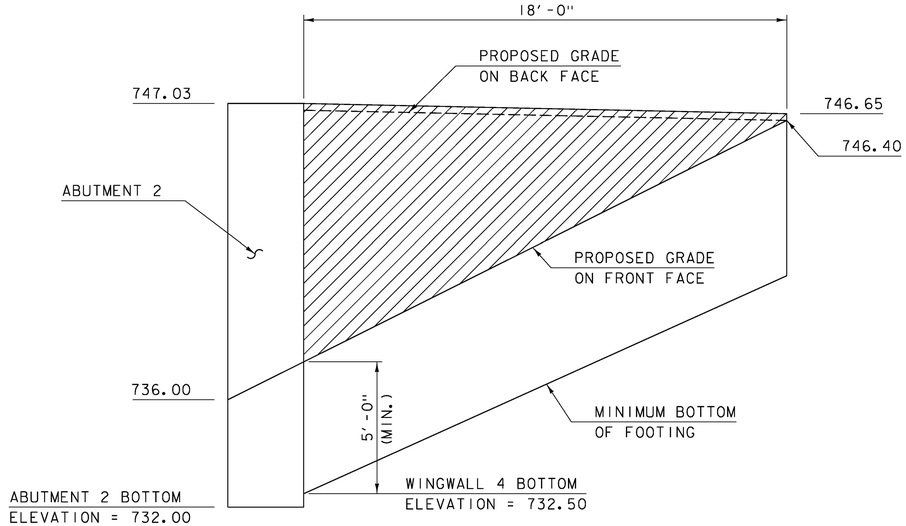

WINGWALL 4 ELEVATION VIEW

SCALE: ⅜" = 1'-0"

PAY LIMITS OF 900.670
"SPECIAL PROVISION
(RETAINING WALL)"

CLD 12-0120 MODEL: WINGWALL 3 AND 4

PROJECT NAME:	STOWE
PROJECT NUMBER:	BRF 0235(15)
FILE NAME: z88cl90sub.dgn	PLOT DATE: 5/8/2015
PROJECT LEADER: J. BYATT	DRAWN BY: M. SMITH
DESIGNED BY: J. FRENCH	CHECKED BY: J. BYATT
WINGWALL PLAN AND ELEVATION (2 OF 2)	SHEET 47 OF 79

CLD CONSULTING ENGINEERS

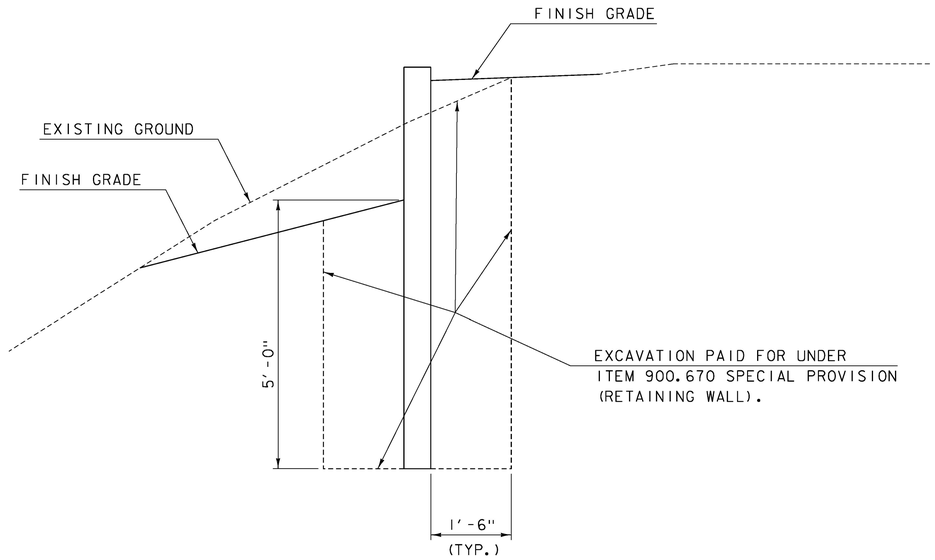

TYPICAL WINGWALL EXCAVATION DETAIL

SCALE: 3/8" = 1'-0"

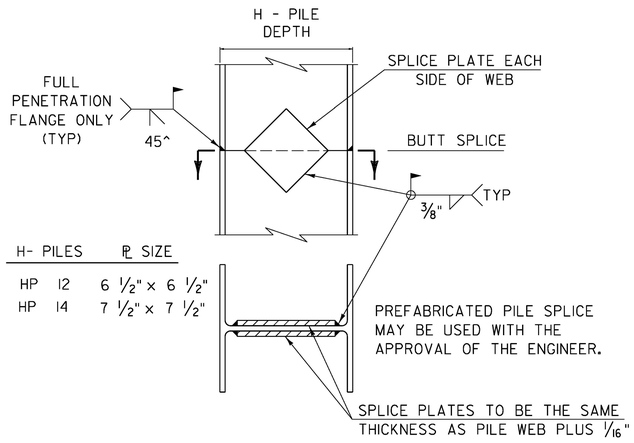

DETAIL OF PILE SPLICE

SCALE: 3/8" = 1'-0"

NOTES:

1. ALL WINGWALLS SHALL BE SELECTED FROM THE LIST OF WALLS ON THE APPROVED RETAINING WALL DOCUMENT AVALABLE FROM VAOT MATERIALS & RESEARCH WEB SITE. THE RETAINING WALL SHALL HAVE CONCRETE FACING.

2. THE WALL SHALL BE PAID FOR UNDER ITEM 900.670 "SPECIAL PROVISION (RETAINING WALL)".

3. THE BOTTOM OF WALL SHALL BE A MINIMUM OF 5 FEET BELOW THE FINISH GRADE IN THE FRONT OF WALL.

4. THE WALL SHALL BE DESIGNED IN ACCORDANCE WITH 2012 AASHTO LRFD BRIDGE DESIGN SPECIFICATIONS AND ITS LATEST REVISIONS. THE DESIGN SHALL INCLUDE THE EFFECT OF ALL LOADS INCLUDING BUT NOT LIMITED TO LIVE LOAD, VEHICLE IMPACT ON ADJACENT GUARDRAIL AND POSTS, EARTH SURCHARGE, AND HYDROSTATIC PRESSURE.

5. THE TYPE OF WALL SELECTED SHALL BE COMPATIBLE WITH ADJACENT OBSTRUCTIONS SUCH AS GUARD RAIL POSTS. ANY CHANGES TO THE REINFORCING OR ANCHORING SYSTEM SHALL BE DETAILED IN THE FABRICATION DRAWINGS.

6. THE FOLLOWING SOIL PROPERTIES SHALL BE USED IN THE DESIGN OF THE WINGWALLS:

FOUNDATION SOIL DESIGN VALUES	
NOMINAL BEARING RESISTANCE:	13.5 KSF
FOUNDATION SOIL PARAMETERS	
UNIT WEIGHT:	115 PCF
FRICTION ANGLE:	34°
GRANULAR BACKFILL FOR STRUCTURES	
UNIT WEIGHT:	140 PCF
FRICTION ANGLE:	34°
ACTIVE EARTH PRESSURE COEFFICENT, Ka	0.28
BEARING RESISTANCE FACTORS (STRENGTH LIMIT STATE)	0.45
SLIDING RESISTANCE FACTORS	
MSEW:	1.0
GRAVITY/SEMI-GRAVITY (PROPRIETARY SYSTEM):	1.0
NON-GRAVITY CANTILEVERED AND ANCHORED:	0.8
GEOSYNTHETIC RESISTANCE FACTORS (IF APPLICABLE)	
TENSILE RESISTANCE OF GEOSYNTHETIC REINFORCEMENT AND CONNECTORS:	0.9
PULLOUT RESISTANCE OF TENSILE REINFORCEMENT:	0.9

7. THE INTERFACE BETWEEN THE WINGWALL AND THE ABUTMENT STEM SHALL BE DESIGNED TO ALLOW 0.74 INCHES OF MOVEMENT. A JOINT DETAIL SHALL BE SUBMITTED TO THE PROJECT MANAGER FOR REVIEW AND APPROVAL. ALL COMPONENTS SHALL BE INCLUDED IN THE UNIT PRICE FOR ITEM 900.670 SPECIAL PROVISION (RETAINING WALL).

8. WATER REPELLENT, SILANE, SHALL BE APPLIED TO ALL EXPOSED CONCRETE SURFACES TO 1' BELOW GRADE. PAYMENT SHALL BE INCIDENTAL TO CONTRACT ITEM 900.670.

CLD 12-0120 MODEL: Pile Details

PROJECT NAME: STOWE
PROJECT NUMBER: BRF 0235(15)

FILE NAME: z88cl90sub.dgn
PROJECT LEADER: J. BYATT
DESIGNED BY: J. FRENCH
WINGWALL AND PILE DETAILS

PLOT DATE: 5/8/2015
DRAWN BY: M. SMITH
CHECKED BY: J. BYATT
SHEET 48 OF 79

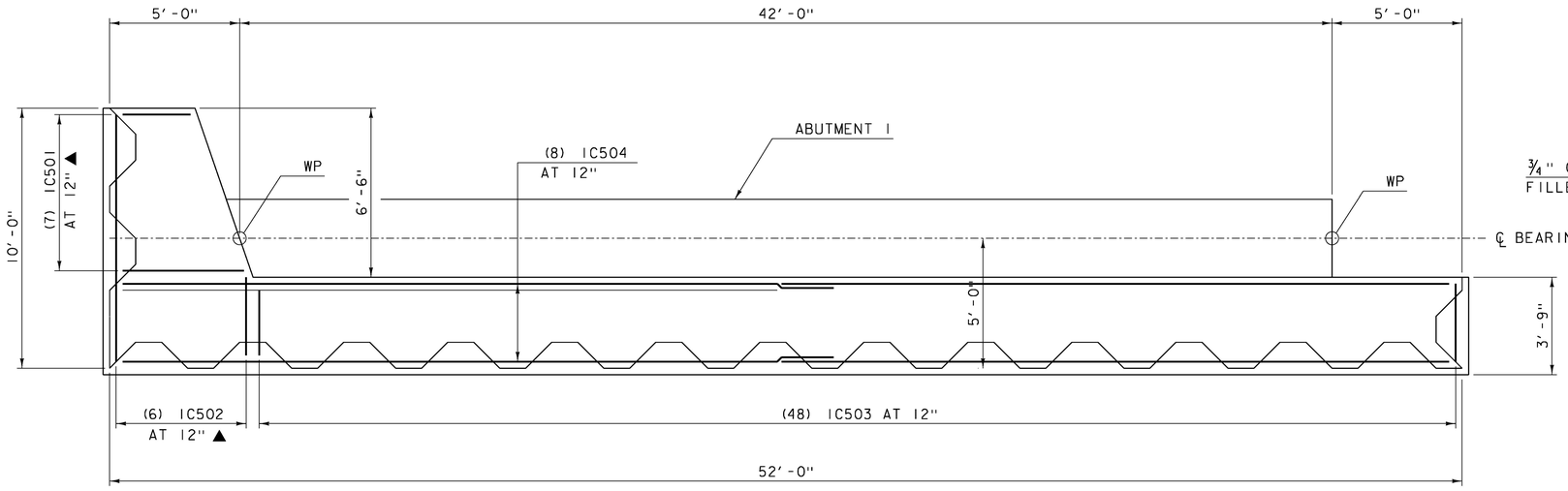

SHEET PILE RETAINING WALL PLAN

SCALE: 3/8" = 1'-0"

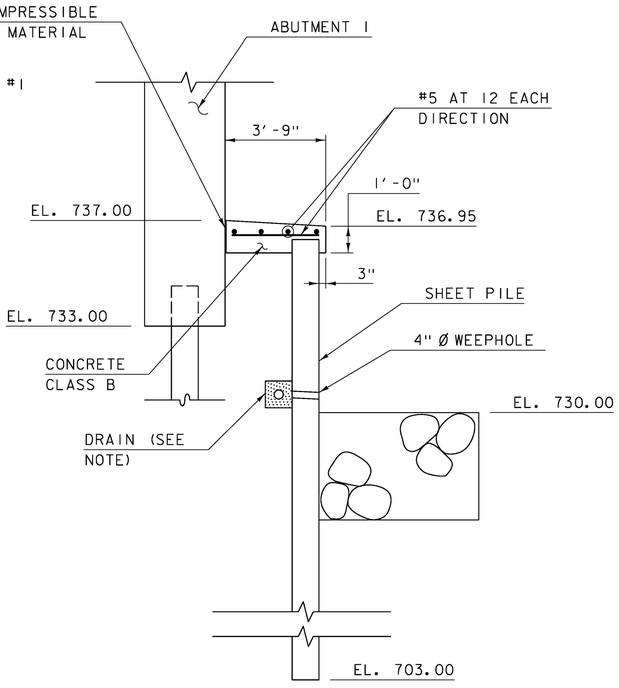

SECTION A-A
PERMANENT STEEL SHEET PILING WALL SECTION

SCALE: 3/8" = 1'-0"

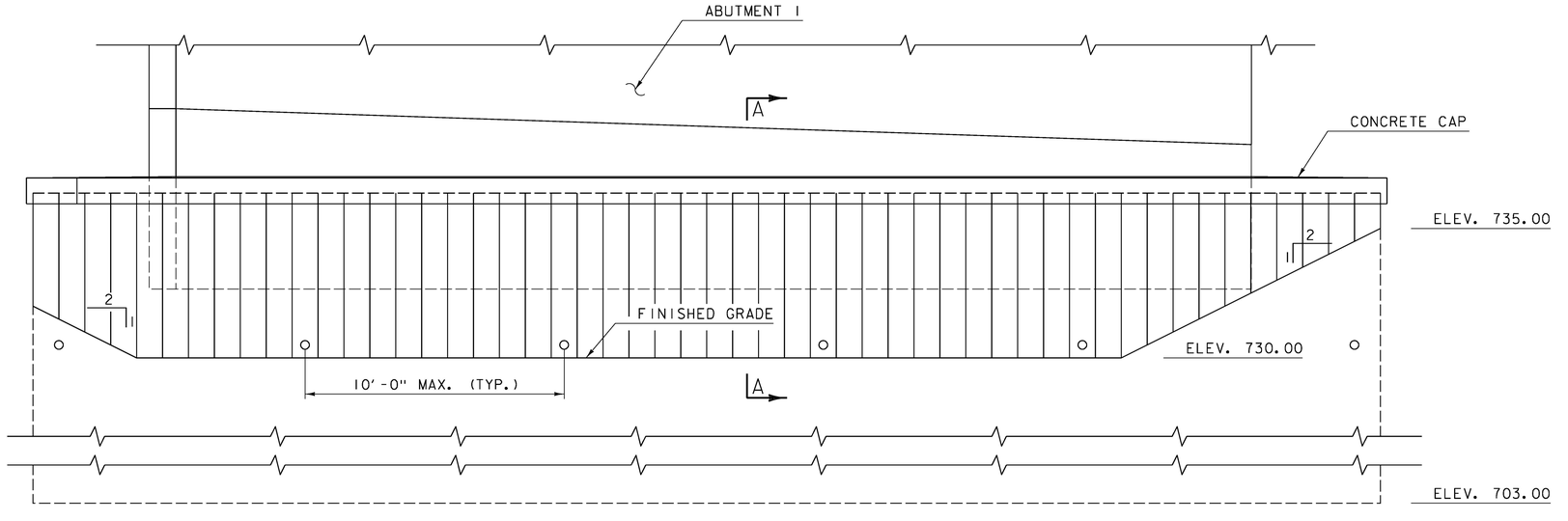

NOTE: SEE WINGWALL ELEVATIONS ON SHEET 46 FOR ADDITIONAL INFORMATION.

SHEET PILE RETAINING WALL ELEVATION

SCALE: 3/8" = 1'-0"

NOTES:
1. PAYMENT FOR PERMANENT STEEL SHEET PILING SHALL BE UNDER ITEM 505.35.
2. DRAIN SHALL CONSIST OF A 4" PERFORATED PIPE WITHIN A 12" ZONE OF 3/4" STONE WITH GEOTEXTILE. PAYMENT WILL BE INCIDENTAL TO ITEM 505.35.

CONSULTING ENGINEERS

PROJECT NAME: STOWE	
PROJECT NUMBER: BRF 0235(15)	
FILE NAME: z88cl90sub.dgn	PLOT DATE: 5/8/2015
PROJECT LEADER: J. BYATT	DRAWN BY: M. SMITH
DESIGNED BY: J. FRENCH	CHECKED BY: J. BYATT
SHEET PILE RETAINING WALL DETAILS	SHEET 49 OF 79

CLD 12-020 MODEL: Sheet Pile Wall

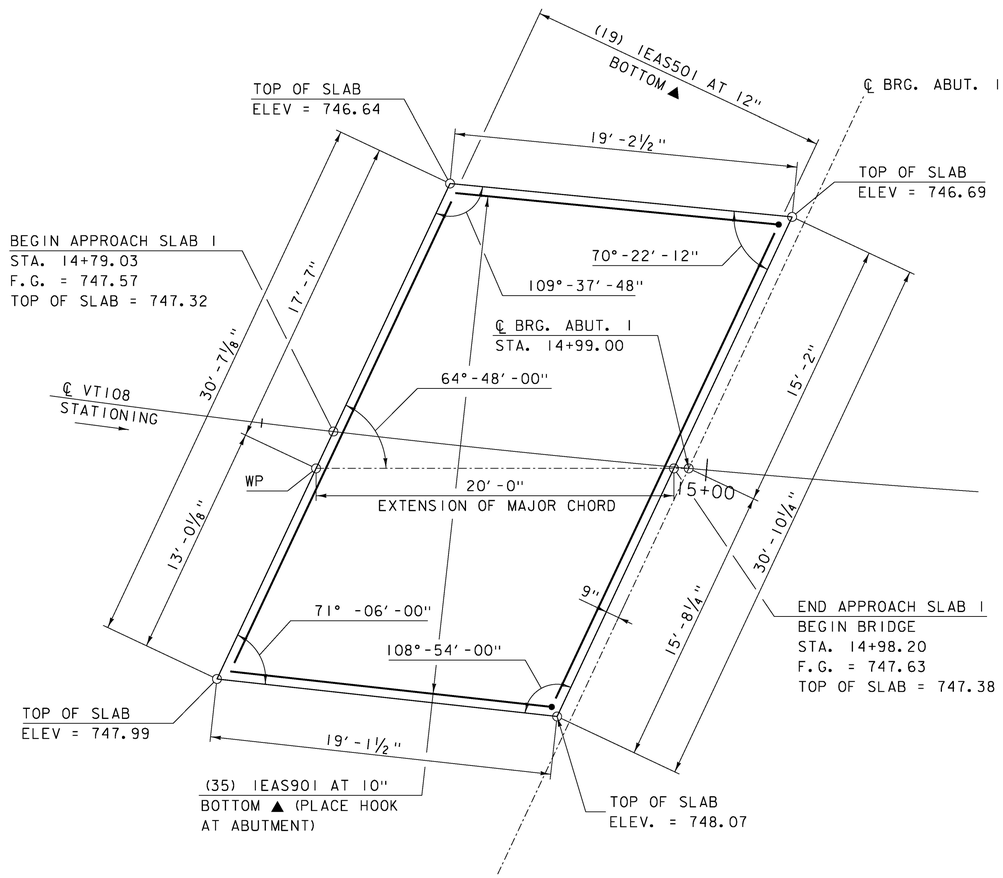

APPROACH SLAB 1 LAYOUT

SCALE: ¼" = 1'-0"

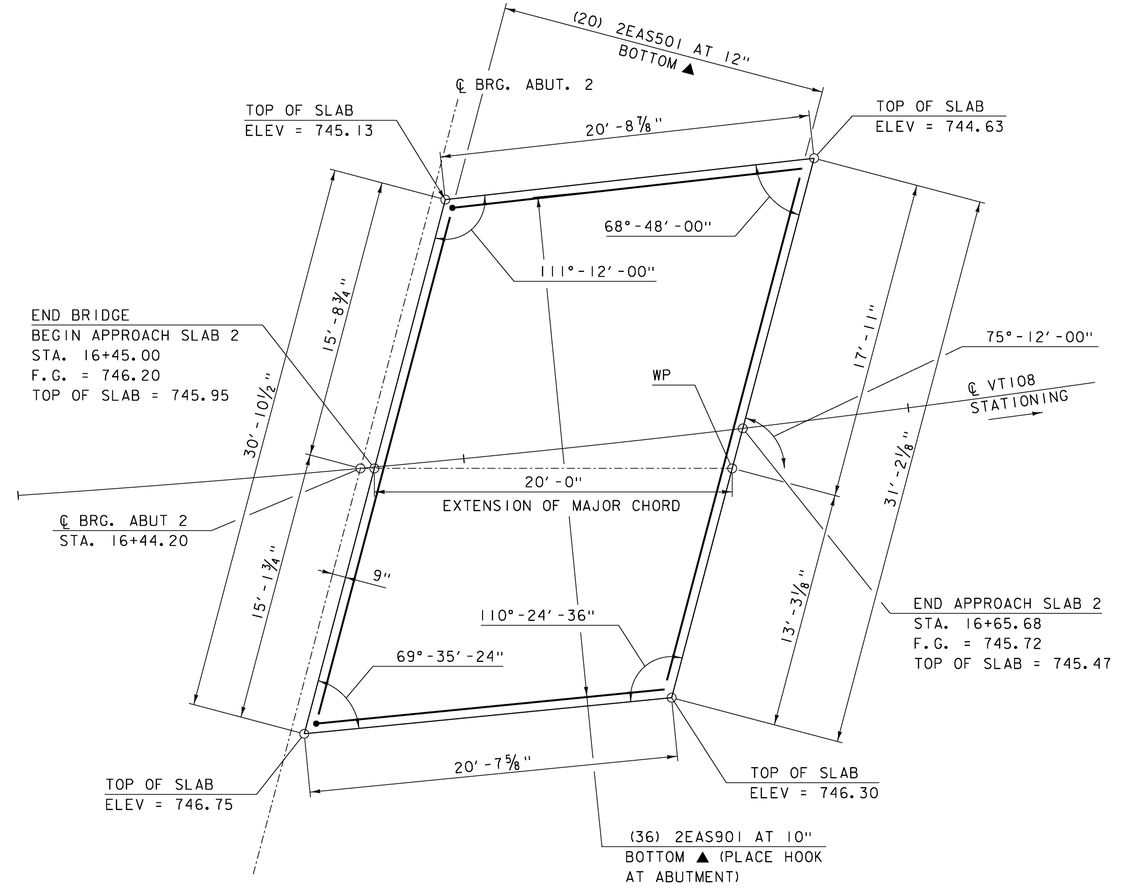

APPROACH SLAB 2 LAYOUT

SCALE: ¼" = 1'-0"

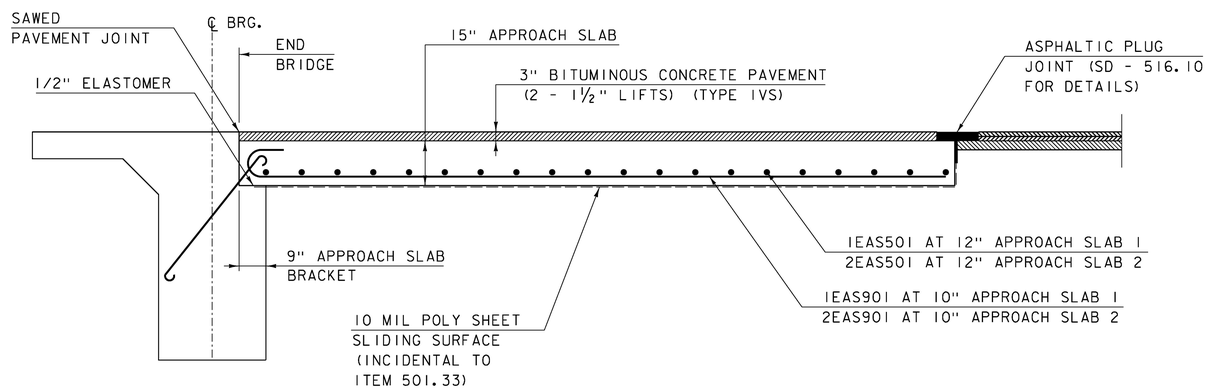

TYPICAL APPROACH SLAB

SCALE: ½" = 1'-0"

PROJECT NAME:	STOWE
PROJECT NUMBER:	BRF 0235(15)
FILE NAME: z88cl90sup.dgn	PLOT DATE: 5/8/2015
PROJECT LEADER: J. BYATT	DRAWN BY: M. SMITH
DESIGNED BY: J. FRENCH	CHECKED BY: J. BYATT
APPROACH SLAB DETAILS	SHEET 50 OF 79

CLD 12-0120 MODEL: Approach Slab

STATE OF VERMONT
AGENCY OF TRANSPORTATION

REINFORCING STEEL SCHEDULE

ITEM	EACH	SIZE	LENGTH	MARK	TYPE	A	B	C	D	E	F	G	H	J	K	R	O
	DECK																
	210	5	39'- 9"	S501.2	STR	39'- 9"											
✳ ▲	183	5	34'- 11"	S502.2	STR	34'- 11"											
✳ ▲	274	5	30'- 11"	S503.2	STR	30'- 11"											
	546	6	4'- 6"	S601.2	22		2'- 6"	2'- 0"	0'- 0"				0'- 2"	0'- 0"	2'- 6"	0'- 0"	
✳	75	7	20'- 0"	S701.2	STR	20'- 0"											
	ABUTMENT #1																
	354	4	3'- 7"	1A401	16	0'- 6"	2'- 7"	0'- 0"	0'- 6"				0'- 4"		0'- 4"		
✳	25	5	21'- 11"	1A501	STR	21'- 11"											
	51	5	6'- 11"	1A502	17		2'- 2"	2'- 7"	2'- 2"								
	8	5	7'- 1"	1A503	14	2'- 2"	0'- 0"	0'- 0"	2'- 9"	2'- 2"			0'- 10"		2'- 5"		
	16	6	22'- 2"	1A601	STR	22'- 2"											
	330	4	3'- 7"	1A401.2	16	0'- 6"	2'- 7"	0'- 0"	0'- 6"				0'- 4"		0'- 4"		
✳	15	5	22'- 2"	1A501.2	STR	22'- 2"											
	31	5	3'- 5"	1A502.2	17		2'- 2"	1'- 3"	0'- 0"								
	9	5	7'- 1"	1A503.2	14	2'- 2"	0'- 0"	0'- 0"	2'- 9"	2'- 2"			0'- 10"		2'- 5"		
	32	5	5'- 8"	1A504.2	1	0'- 11"	3'- 10"					0'- 11"		0'- 5"			
	34	5	6'- 0"	1A505.2	22		3'- 6"	2'- 6"	0'- 0"				2'- 6"		2'- 6"		
	12	5	9'- 7"	1A506.2	17		3'- 6"	2'- 7"	3'- 6"								
	35	5	10'- 0"	1A507.2	STR	10'- 0"											
	9	5	6'- 11"	1A508.2	17	6'- 11"											
	114	7	13'- 4"	1A701.2	17		2'- 7"	10'- 9"	0'- 0"								
	114	7	6'- 3"	1A702.2	STR	6'- 3"											
✳	35	7	11'- 0"	1A703.2	17		7'- 6"	3'- 6"	0'- 0"								
	ABUTMENT #2																
	354	4	3'- 7"	2A401	16	0'- 6"	2'- 7"	0'- 0"	0'- 6"				0'- 4"		0'- 4"		
	24	5	21'- 11"	2A501	STR	21'- 11"											
	51	5	6'- 11"	2A502	17		2'- 2"	2'- 7"	2'- 2"								
	8	5	7'- 1"	2A503	14	2'- 2"	0'- 0"	0'- 0"	2'- 9"	2'- 2"			0'- 11"		2'- 5"		
✳	17	6	22'- 2"	2A601	STR	22'- 2"											
	330	4	3'- 7"	2A401.2	16	0'- 6"	2'- 7"	0'- 0"	0'- 6"				0'- 4"		0'- 4"		
	14	5	22'- 2"	2A501.2	STR	22'- 2"											
	31	5	3'- 5"	2A502.2	17		2'- 2"	1'- 3"	0'- 0"								
	9	5	7'- 1"	2A503.2	14	2'- 2"	0'- 0"	0'- 0"	2'- 9"	2'- 2"			0'- 11"		2'- 5"		
	32	5	5'- 8"	2A504.2	1	0'- 11"	3'- 10"					0'- 11"		0'- 5"			
	34	5	6'- 0"	2A505.2	22		3'- 6"	2'- 6"	0'- 0"				2'- 6"		2'- 6"		
	12	5	9'- 7"	2A506.2	17		3'- 6"	2'- 7"	3'- 6"								
	35	5	10'- 0"	2A507.2	STR	10'- 0"											
	9	5	6'- 11"	2A508.2	17	6'- 11"											
	114	7	13'- 1"	2A701.2	17		2'- 7"	10'- 6"	0'- 0"								
	114	7	6'- 3"	2A702.2	STR	6'- 3"											
	34	7	11'- 0"	2A703.2	17		7'- 6"	3'- 6"	0'- 0"								
	APPROACH SLAB #1																
▲	19	5	30'- 4"	1EAS501	STR	30'- 4"											
✳ ▲	36	9	20'- 2"	1EAS901	1	1'- 6"	18'- 8"								0'- 11"		
	APPROACH SLAB #2																
▲	20	5	30'- 8"	2EAS501	STR	30'- 8"											
▲	36	9	21'- 8"	2EAS901	1	1'- 5"	20'- 3"								0'- 11"		
	SHEET PILE CONCRETE CAP																
▲	7	5	4'- 6"	1C501	STR	4'- 6"											
▲	6	5	9'- 6"	1C502	STR	9'- 6"											
	48	5	3'- 3"	1C503	STR	3'- 3"											
	8	5	27'- 1"	1C504	STR	27'- 1"											

~ NOTES ~

1. UNLESS OTHERWISE DESIGNATED, ALL BAR REINFORCEMENT FOR CONCRETE IN SIZES UP TO AND INCLUDING NO. 18 SHALL CONFORM TO THE REQUIREMENTS OF THE "SPECIFICATIONS FOR DEFORMED BILLET-STEEL BARS FOR CONCRETE REINFORCEMENT", AASHTO M 31 (ASTM A 615-SI). ALL BARS SHALL BE GRADE 60, UNLESS OTHERWISE DESIGNATED.
2. FOR TYPICAL BENDING DETAILS, RECOMMENDED PIN DIAMETER "D" OF BENDS AND HOOKS, AND OTHER STANDARD PRACTICE, SEE CURRENT CONCRETE REINFORCING STEEL INSTITUTE "MANUAL OF STANDARD PRACTICE".
3. BARS WHICH REQUIRE MORE ACCURATE BENDING THAN STANDARD PRACTICES SHOULD HAVE LIMITS INDICATED.
4. ALL DIMENSIONS ARE OUT TO OUT OF BAR EXCEPT "A" AND "G" ON STANDARD 180 DEGREE AND 135 DEGREE HOOKS.
5. "J" DIMENSION ON 180 DEGREE HOOKS TO BE SHOWN ONLY WHERE NECESSARY TO RESTRICT HOOK SIZE. OTHERWISE, STANDARD HOOKS ARE TO BE USED.
6. "H" DIMENSION ON STIRRUPS TO BE SHOWN ONLY WHEN NECESSARY TO MAINTAIN CLEARANCES.
7. WHERE SLOPE DIFFERS FROM 45 DEGREES, DIMENSIONS "H" AND "K" MUST BE SHOWN.
8. ▲ DENOTES BARS TO BE CUT IN FIELD.
9. ✳ DENOTES ONE EXTRA BAR ADDED FOR TESTING PURPOSES.
10. △ DENOTES TWO EXTRA BARS ADDED FOR TESTING PURPOSES.
11. E IN BAR MARK PREFIX DENOTES EPOXY COATED REINFORCING STEEL.

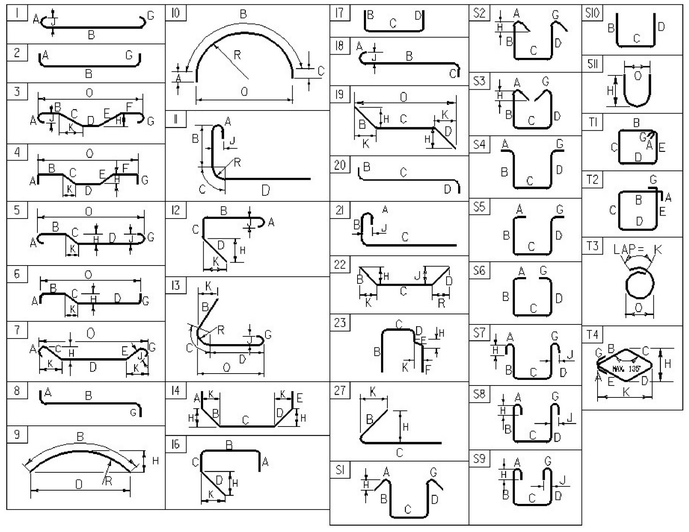

ASTM STANDARD REINFORCING BARS

BAR SIZE DESIGNATION	WEIGHT POUNDS PER FOOT	NOMINAL DIMENSIONS ROUND SECTION		
		DIAMETER INCHES	AREA INCHES ^{2}	PERIMETER INCHES
#3	0.376	0.375	0.11	1.178
#4	0.668	0.500	0.20	1.571
#5	1.043	0.625	0.31	1.963
#6	1.502	0.750	0.44	2.356
#7	2.044	0.875	0.60	2.749
#8	2.670	1.000	0.79	3.142
#9	3.400	1.128	1.00	3.544
#10	4.303	1.270	1.27	3.990
#11	5.313	1.410	1.56	4.430
#14	7.65	1.693	2.25	5.32
#18	13.60	2.257	4.00	7.09

PROJECT NAME: **STOWE**
PROJECT NUMBER: **BRF 0235(15)**

FILE NAME: z88cl90schedule.dgn
PROJECT MANAGER: **J. BYATT**
DESIGNED BY: **A. GIRALDI**
REINFORCING STEEL SCHEDULE SHEET

PLOT DATE: **5/6/2015**
DRAWN BY: **M. SMITH**
CHECKED BY: **J. FRENCH**
SHEET 51 OF 79

MODEL: Schedule
CLD 12-0120

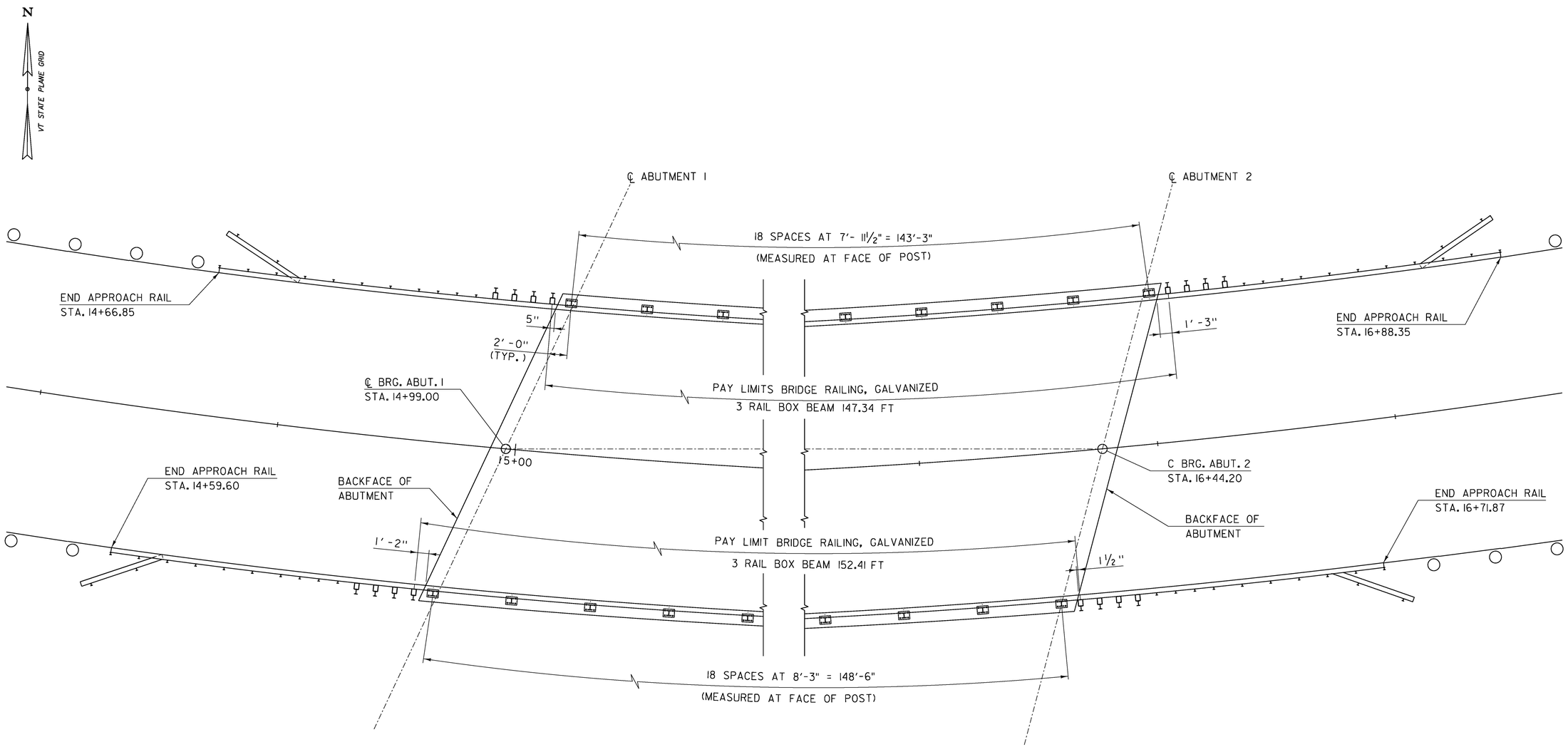

BRIDGE RAIL LAYOUT

SCALE: 3/16" = 1'-0"

CLD 12-0120 MODEL: RailLayout

PROJECT NAME:	STOWE
PROJECT NUMBER:	BRF 0235(15)
FILE NAME: z88c190rail.dgn	PLOT DATE: 5/8/2015
PROJECT LEADER: J. BYATT	DRAWN BY: M. SMITH
DESIGNED BY: J. FRENCH	CHECKED BY: J. BYATT
BRIDGE RAIL LAYOUT	SHEET 52 OF 79

CLD CONSULTING ENGINEERS

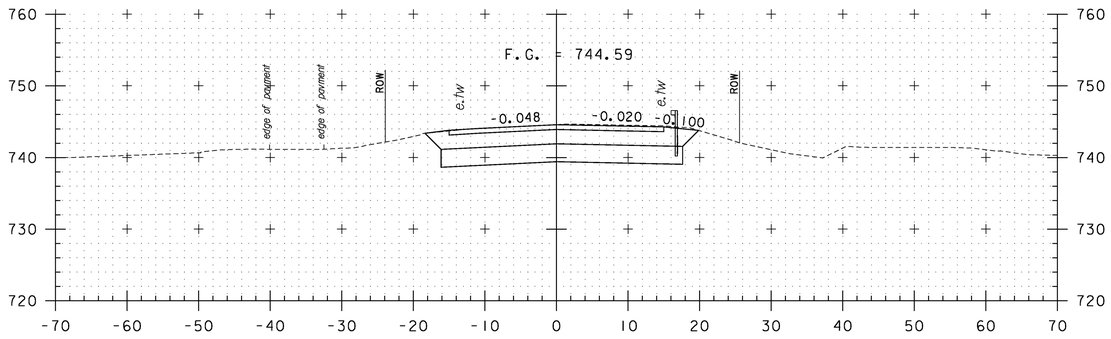

11+00
END APPROACH
BEGIN PROJECT

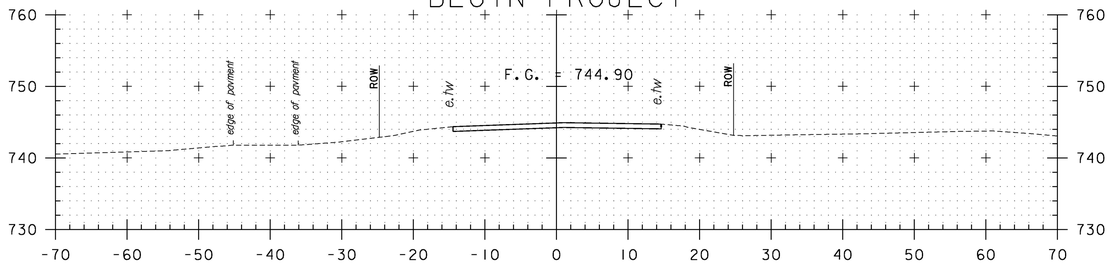

10+50

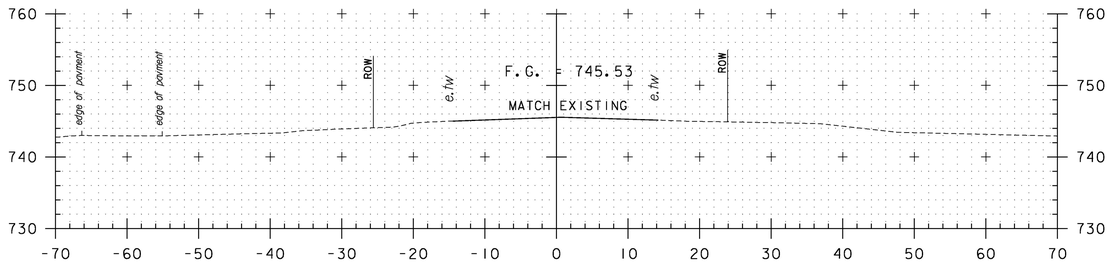

10+00
BEGIN APPROACH

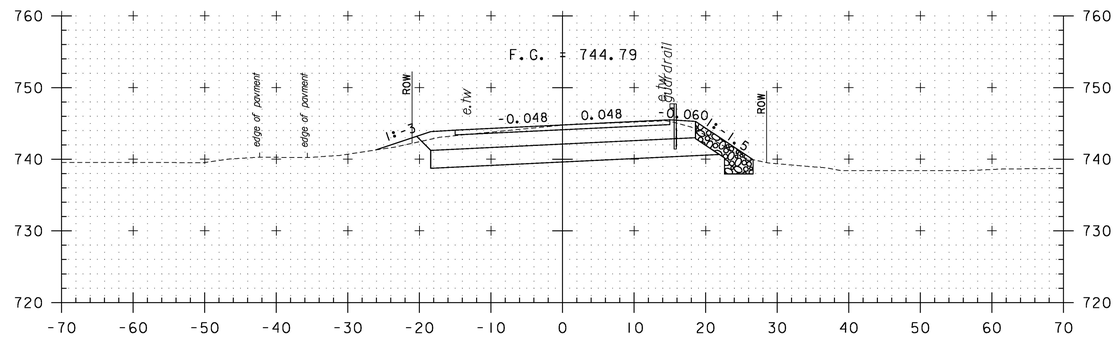

12+50

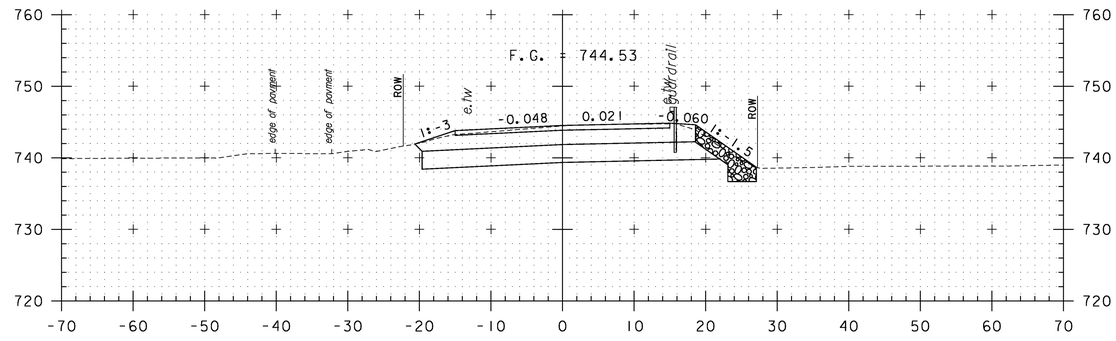

12+00

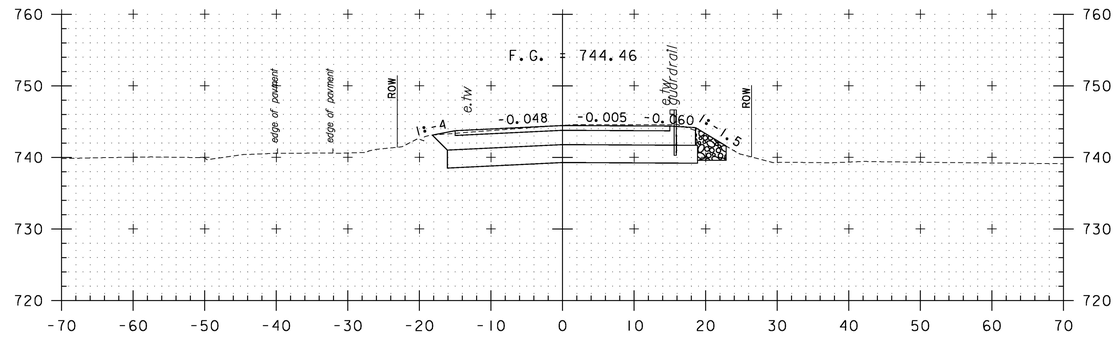

11+50

STA. 10+00 TO STA. 12+50

PROJECT NAME: STOWE
PROJECT NUMBER: BRF 0235(15)

FILE NAME: z88cl90xsl.dgn
PROJECT LEADER: J. BYATT
DESIGNED BY: K. RUTTER
VT 108 CROSS SECTIONS

PLOT DATE: 5/8/2015
DRAWN BY: K. RUTTER
CHECKED BY: C. GREGORY
SHEET 53 OF 79

CLD 12-0120 MODEL: VT108 XS 1

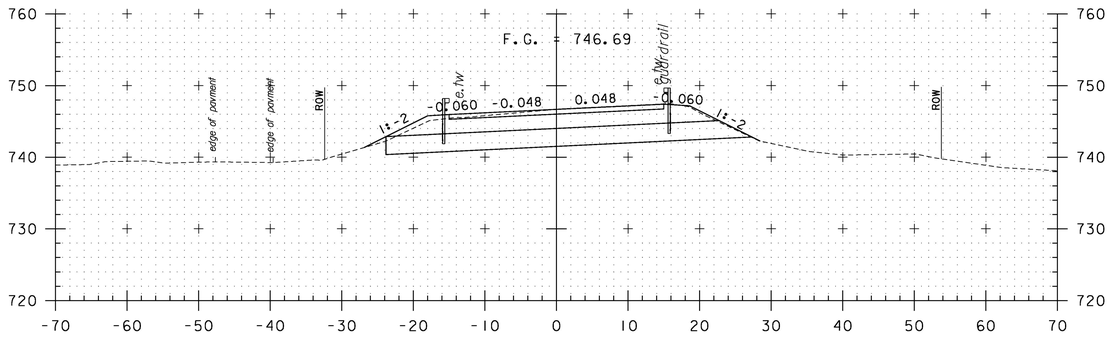

14+00

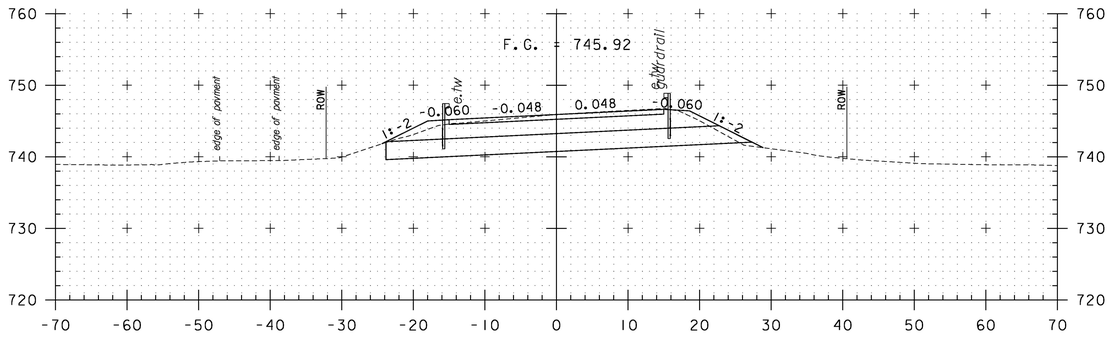

13+50

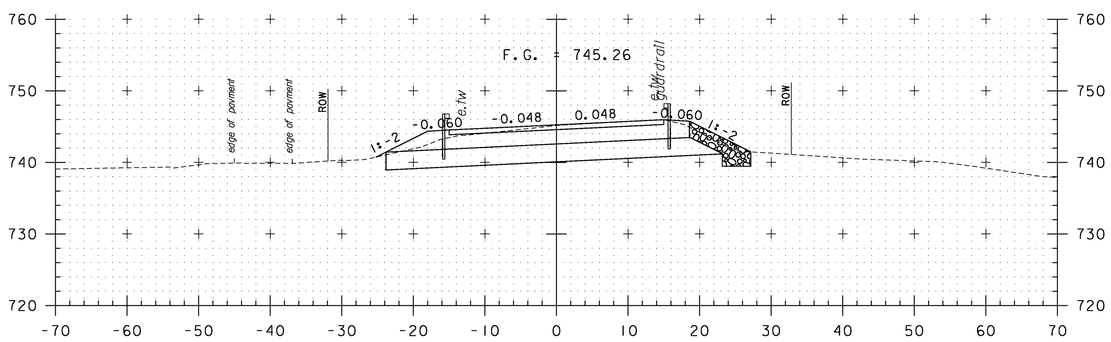

13+00

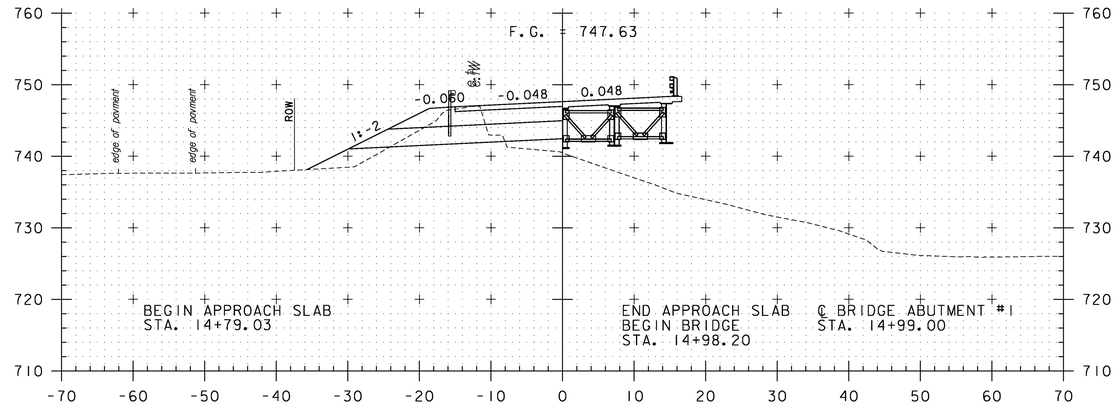

15+00

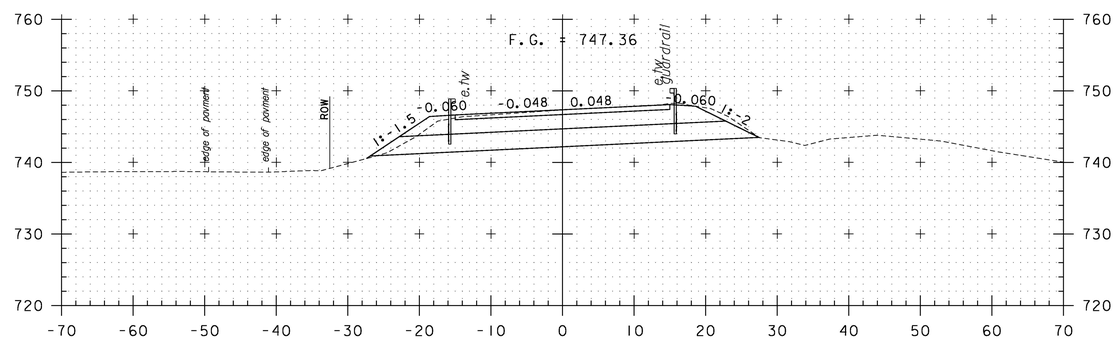

14+50

STA. 13+00 TO STA. 15+00

PROJECT NAME: STOWE
PROJECT NUMBER: BRF 0235(15)

FILE NAME: z88cl90xsl.dgn
PROJECT LEADER: J. BYATT
DESIGNED BY: K. RUTTER
VT 108 CROSS SECTIONS

PLOT DATE: 5/8/2015
DRAWN BY: K. RUTTER
CHECKED BY: C. GREGORY
SHEET 54 OF 79

CLD 12-0120 MODEL: VT108 XS 2

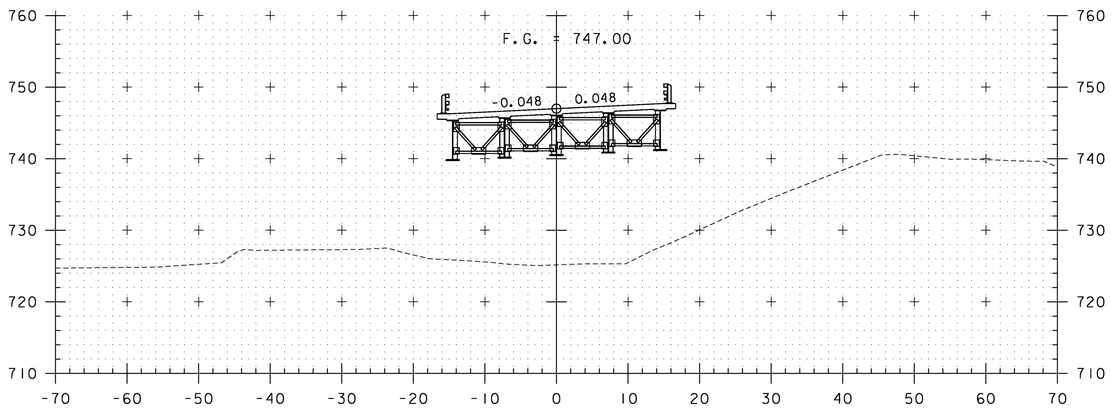

16+00

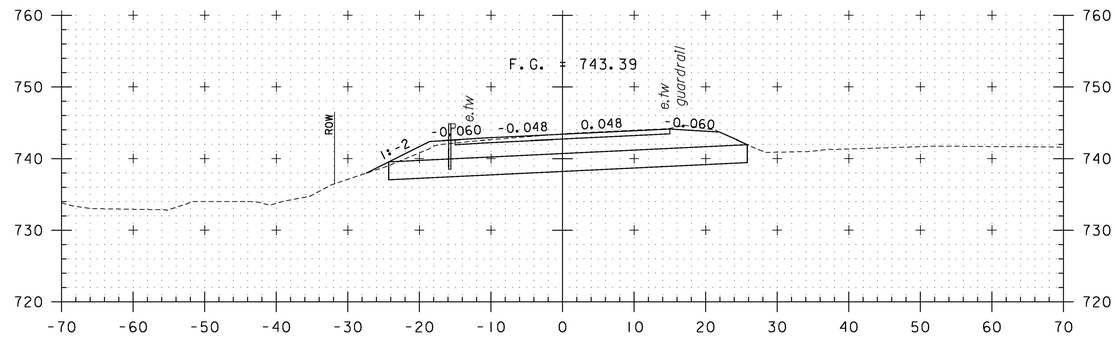

17+50

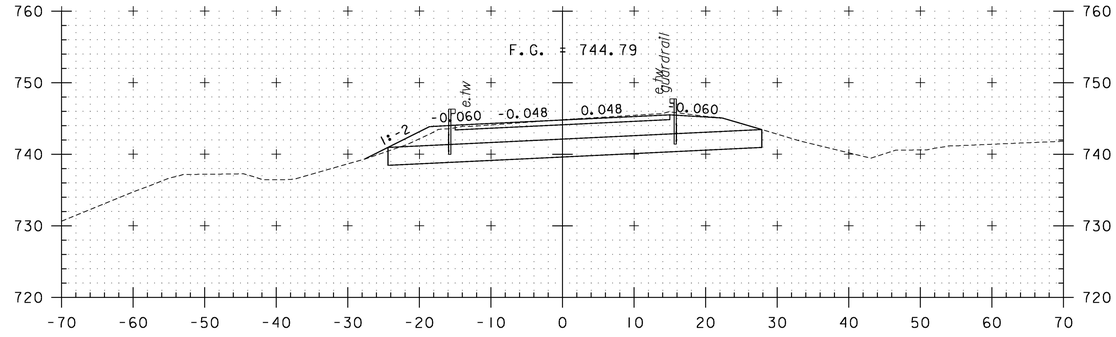

17+00

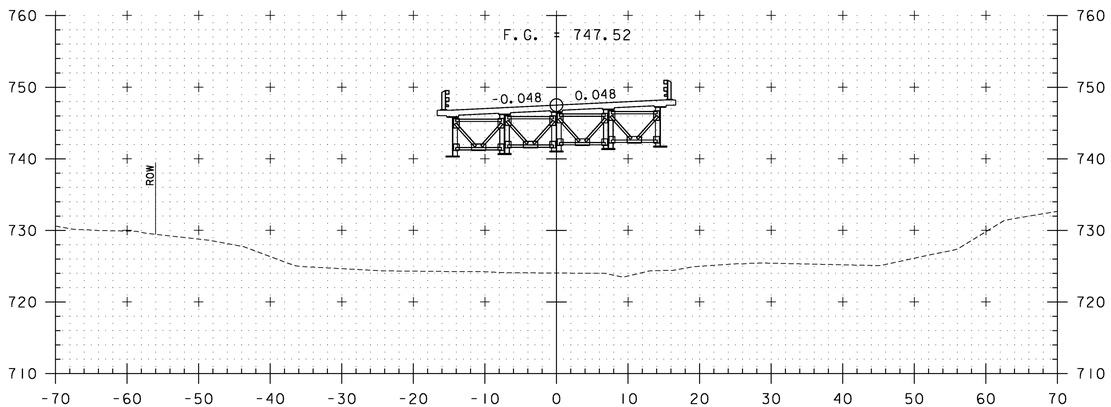

15+50

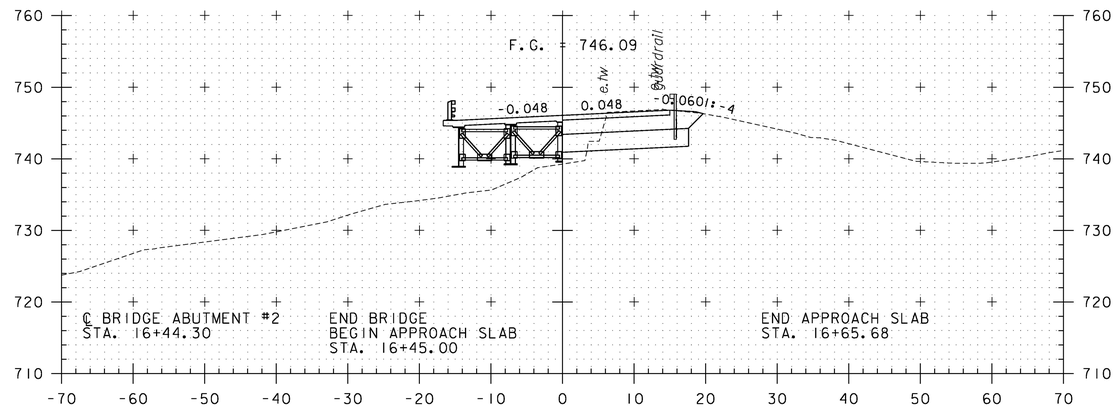

16+50

STA. 15+50 TO STA. 17+50

CLD 12-0020 MODEL: VT108 XS 3

PROJECT NAME:	STOWE
PROJECT NUMBER:	BRF 0235(15)
FILE NAME: z88cl90xsl.dgn	PLOT DATE: 5/8/2015
PROJECT LEADER: J. BYATT	DRAWN BY: K. RUTTER
DESIGNED BY: K. RUTTER	CHECKED BY: C. GREGORY
VT 108 CROSS SECTIONS	SHEET 55 OF 79

CONSULTING ENGINEERS

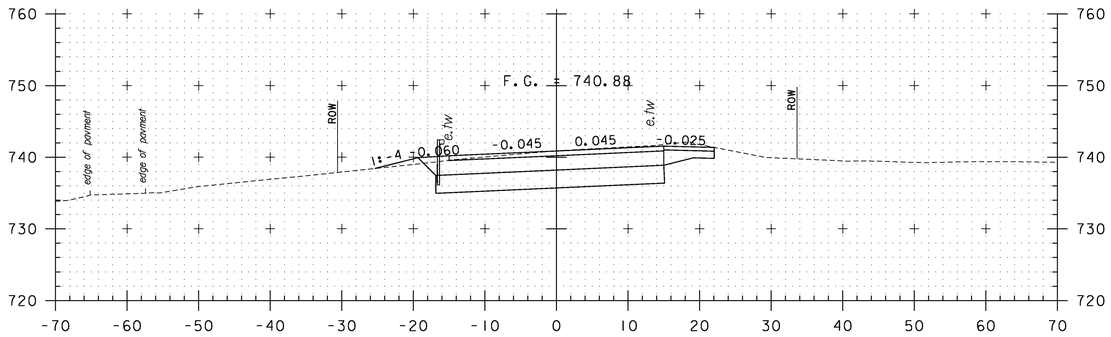

19+00

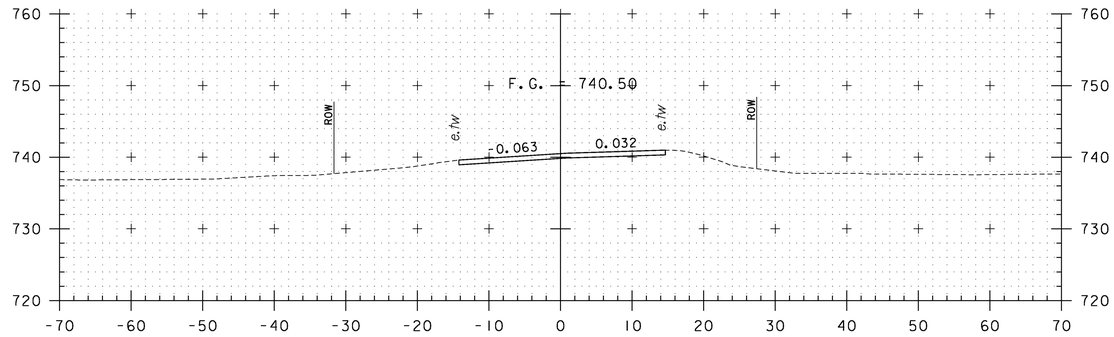

20+50

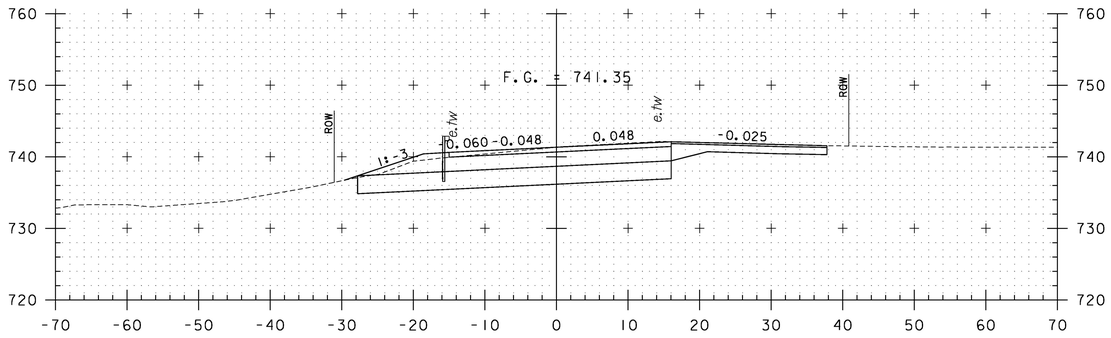

18+50

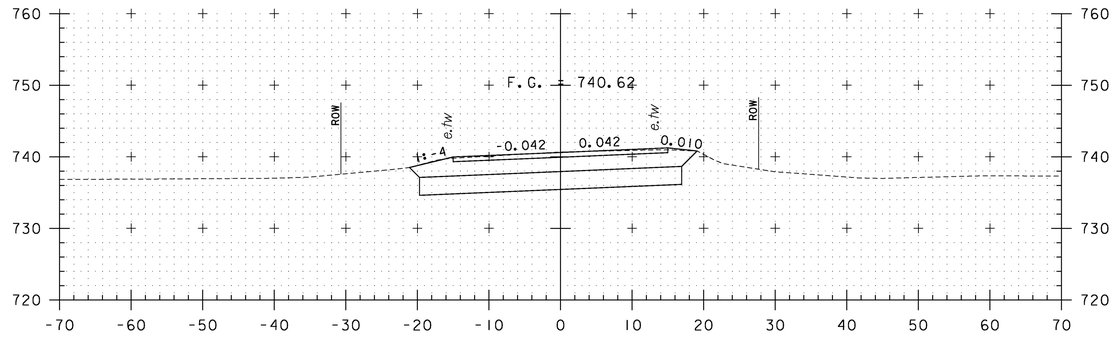

20+00
END PROJECT
BEGIN APPROACH

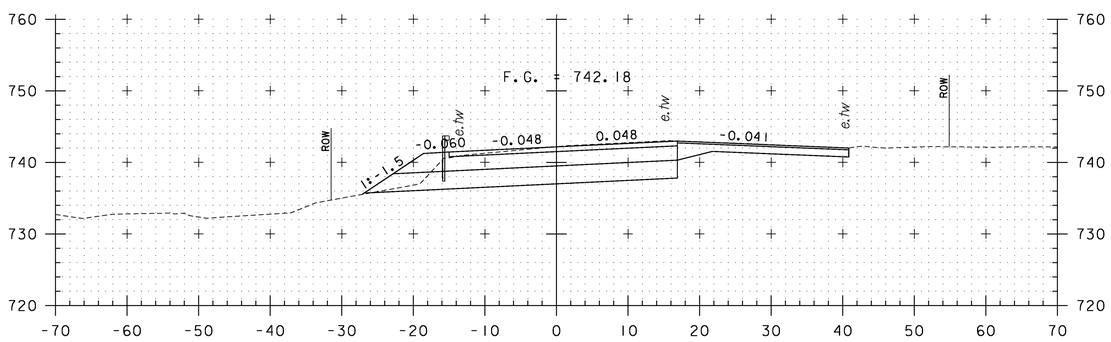

18+00

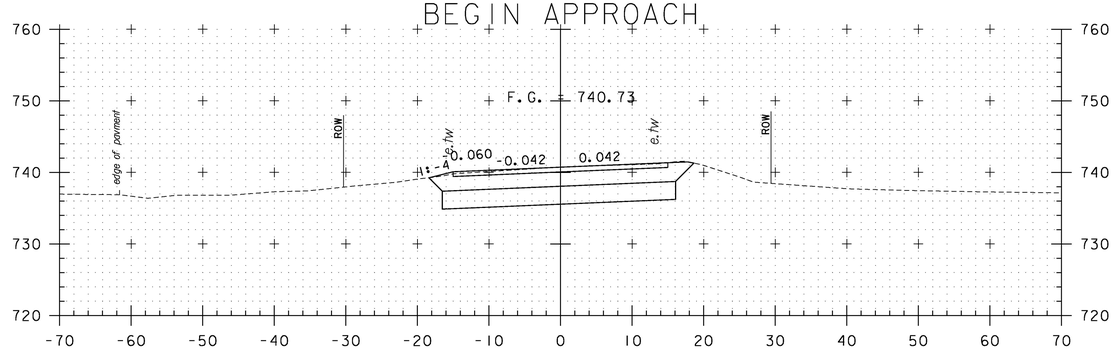

19+50

STA. 18+00 TO STA. 20+50

PROJECT NAME:	STOWE
PROJECT NUMBER:	BRF 0235(15)

FILE NAME: z88c190xsl.dgn	PLOT DATE: 5/8/2015
PROJECT LEADER: J. BYATT	DRAWN BY: K. RUTTER
DESIGNED BY: K. RUTTER	CHECKED BY: C. GREGORY
VT 108 CROSS SECTIONS	SHEET 56 OF 79

CLD 12-0120 MODEL: VT108 XS 4

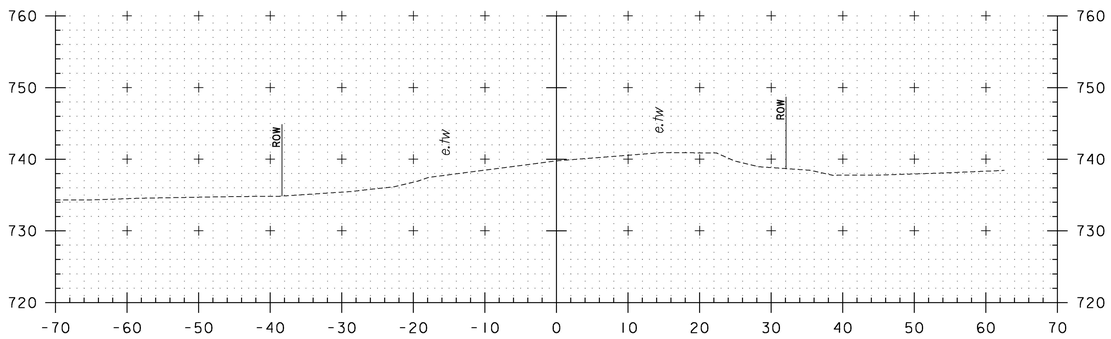

22+00

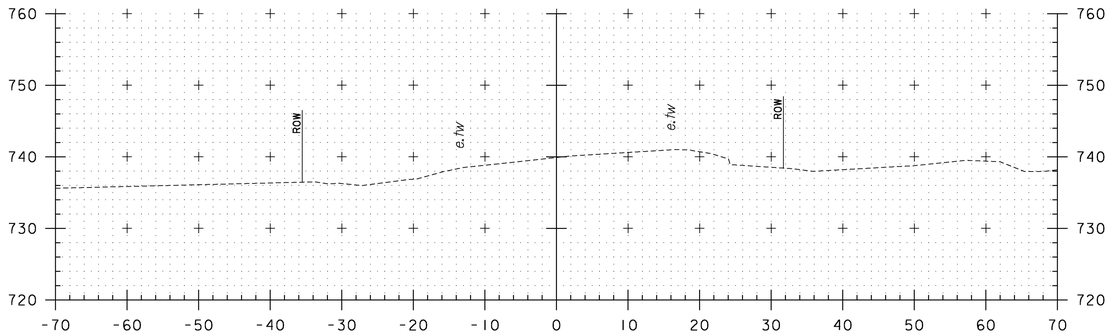

21+50

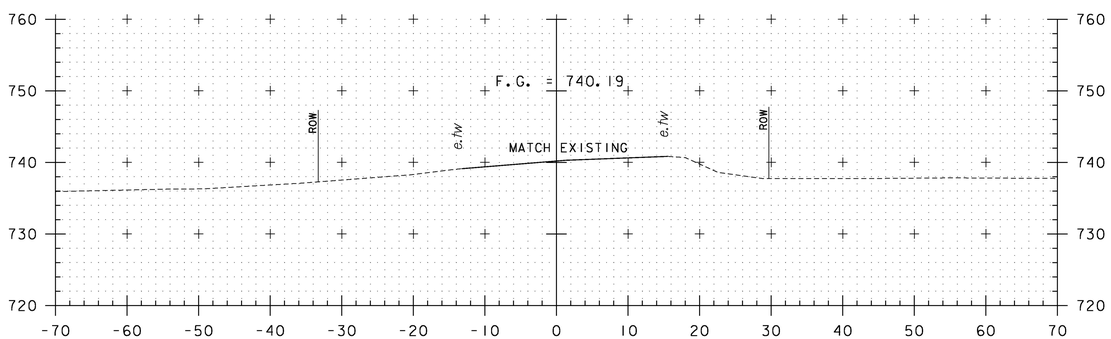

21+00
END APPROACH

STA. 21+00 TO STA. 22+00

PROJECT NAME: STOWE
PROJECT NUMBER: BRF 0235(15)

FILE NAME: z88c190xsl.dgn
PROJECT LEADER: J. BYATT
DESIGNED BY: K. RUTTER
VT 108 CROSS SECTIONS

PLOT DATE: 5/8/2015
DRAWN BY: K. RUTTER
CHECKED BY: C. GREGORY
SHEET 57 OF 79

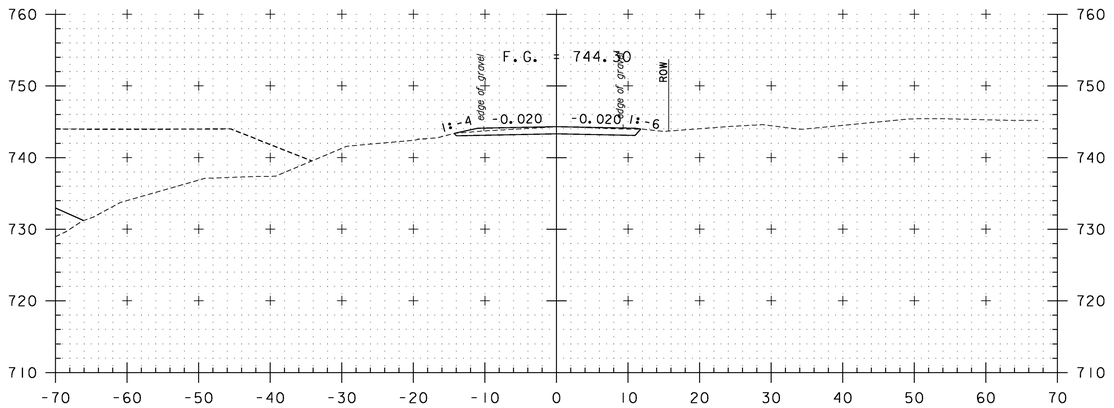

40+50

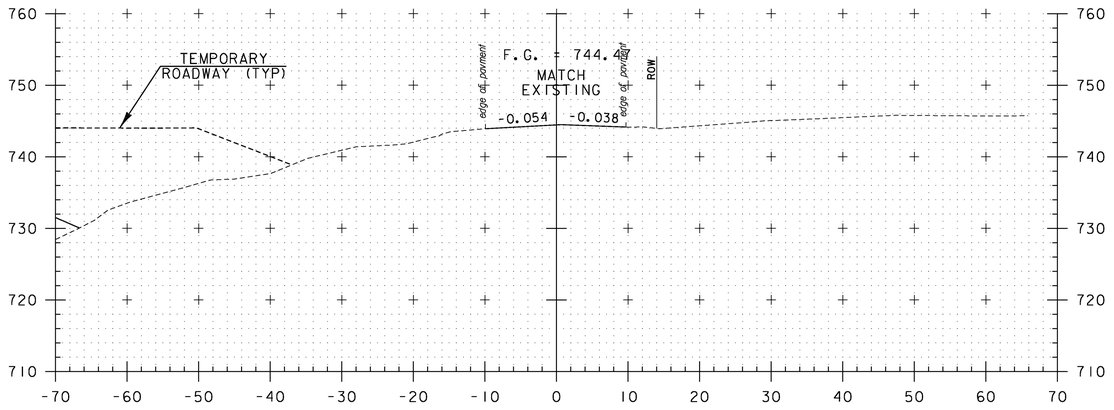

40+45

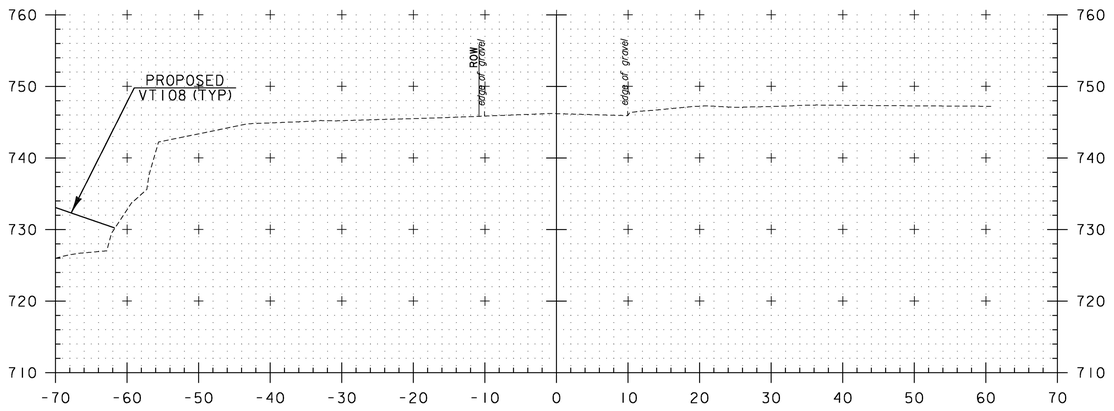

40+00

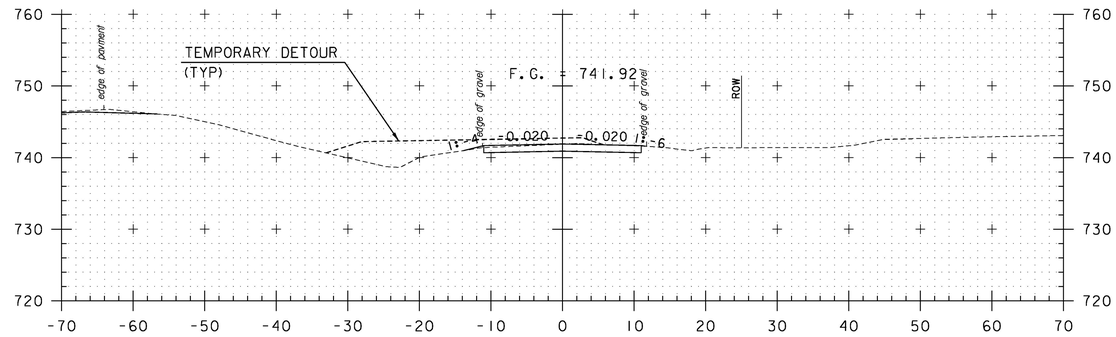

41+50

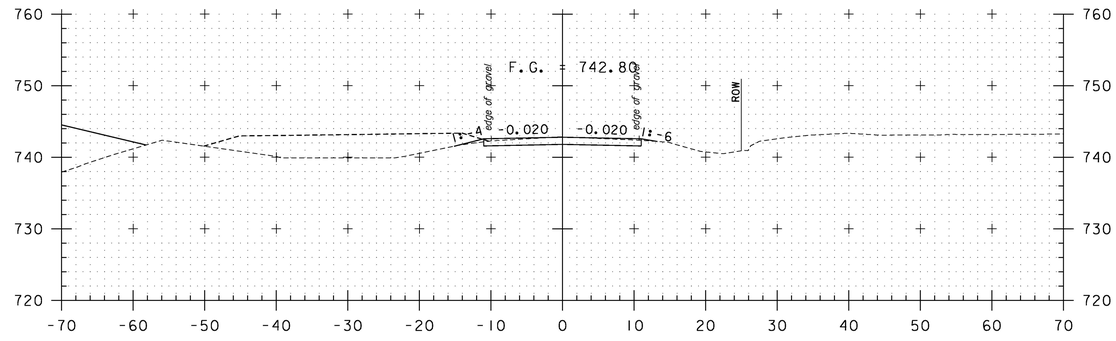

41+00

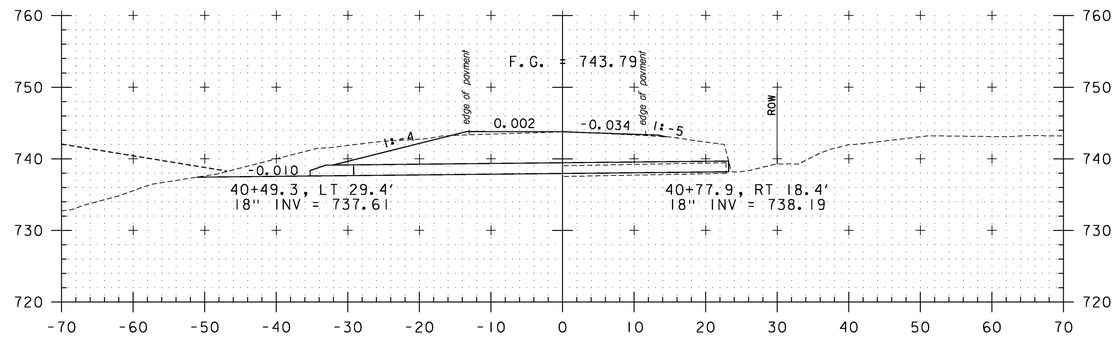

40+65
SKEWED

STA. 40+00 TO STA. 41+50

PROJECT NAME: STOWE
PROJECT NUMBER: BHF 0235(15)

FILE NAME: z88cl90xsMeadow.dgn
PROJECT LEADER: J. BYATT
DESIGNED BY: K. RUTTER
MEADOW LANE CROSS SECTIONS

PLOT DATE: 5/8/2015
DRAWN BY: K. RUTTER
CHECKED BY: C. GREGORY
SHEET 58 OF 79

CLD 12-020 MODEL: MEADOW LANE XS 1

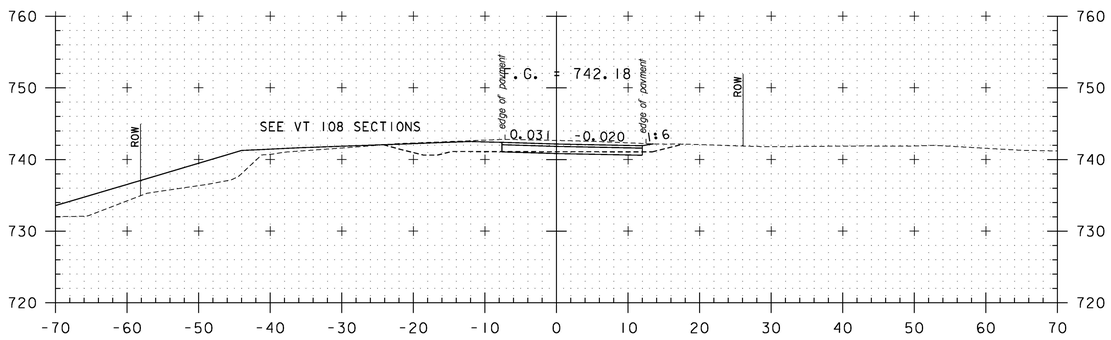

43+00

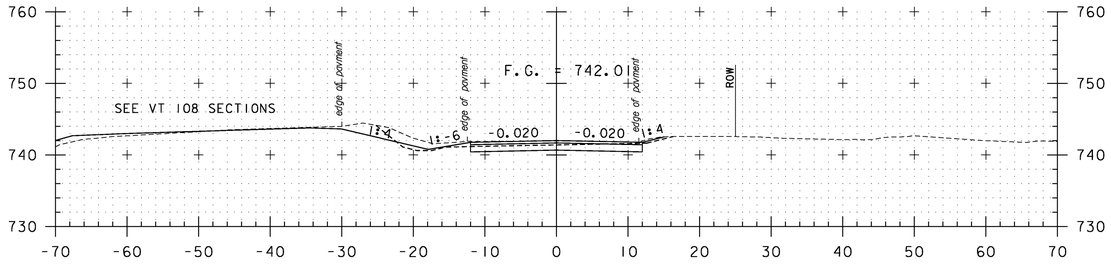

42+50

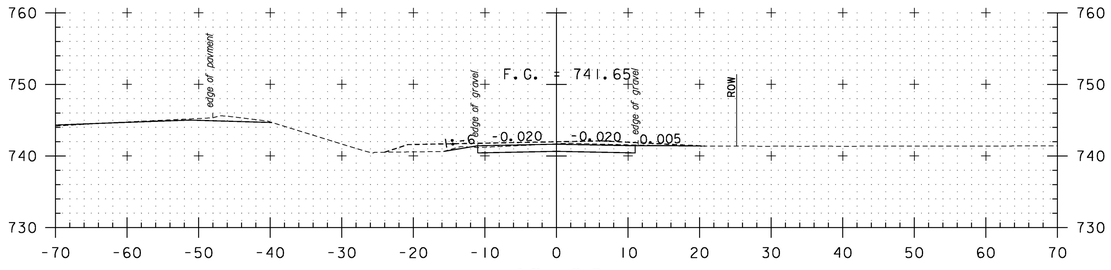

42+00
DRIVE RT

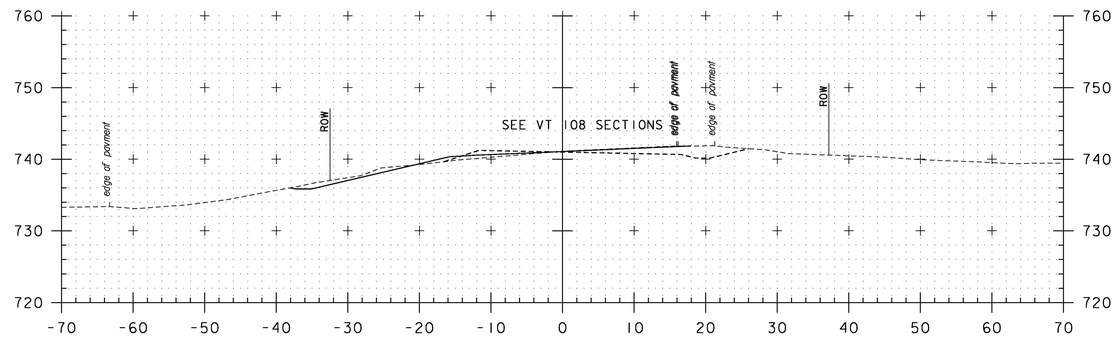

43+65

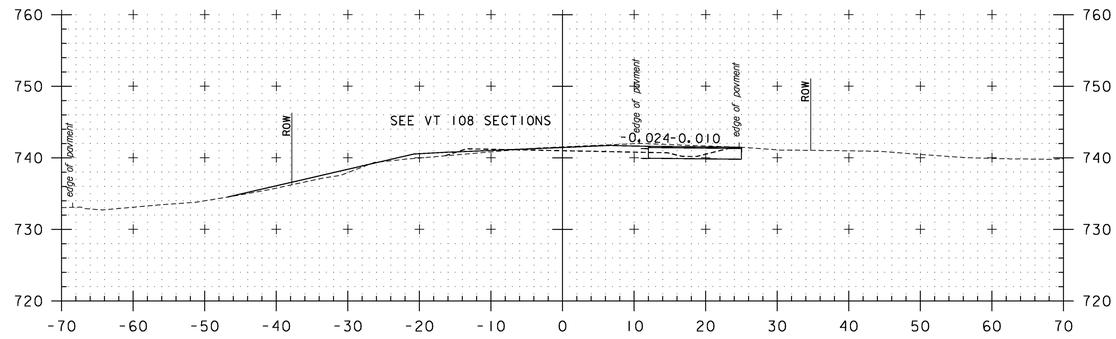

43+50

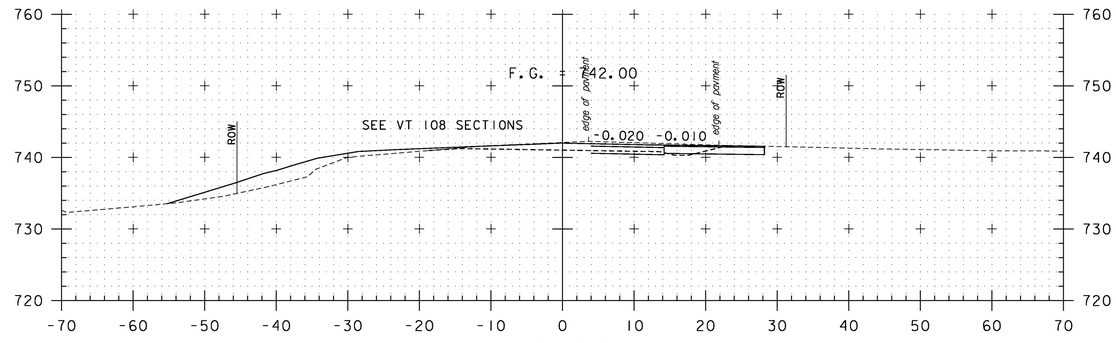

43+30
DRIVE RT

STA. 42+00 TO STA. 43+65

PROJECT NAME: STOWE
PROJECT NUMBER: BHF 0235(15)

FILE NAME: z88cl90xsMeadow.dgn
PROJECT LEADER: J. BYATT
DESIGNED BY: K. RUTTER
MEADOW LANE CROSS SECTIONS

PLOT DATE: 5/8/2015
DRAWN BY: K. RUTTER
CHECKED BY: C. GREGORY
SHEET 59 OF 79

CLD 12-0120 MODEL: MEADOW LANE XS 2

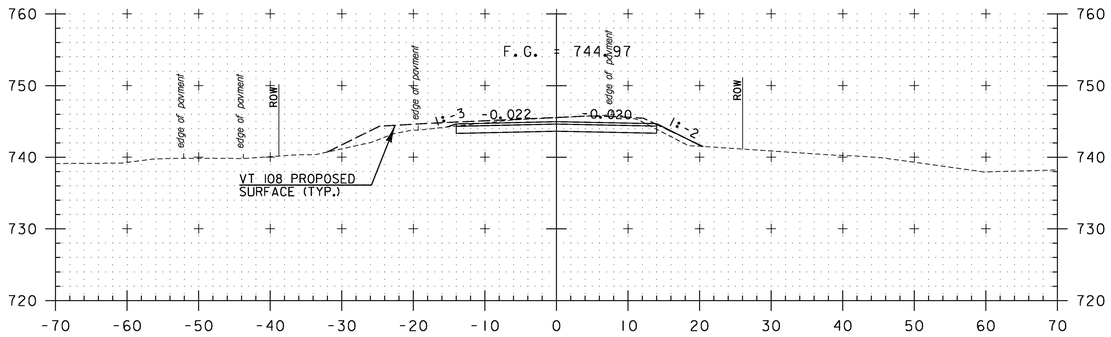

101+00

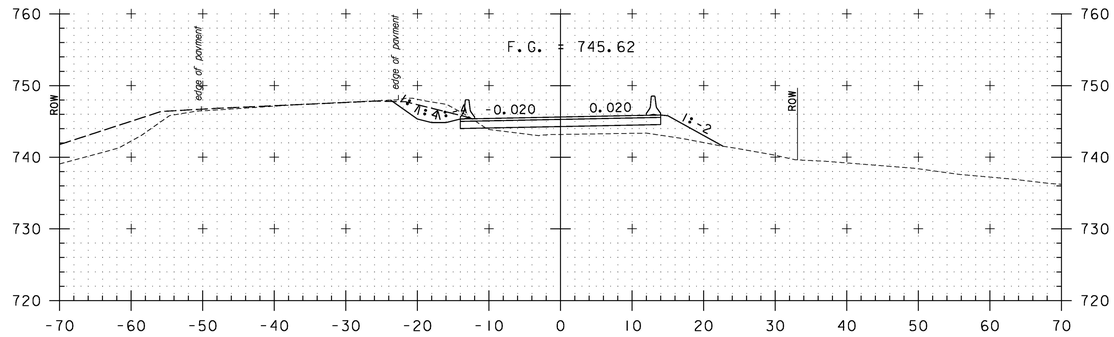

102+50

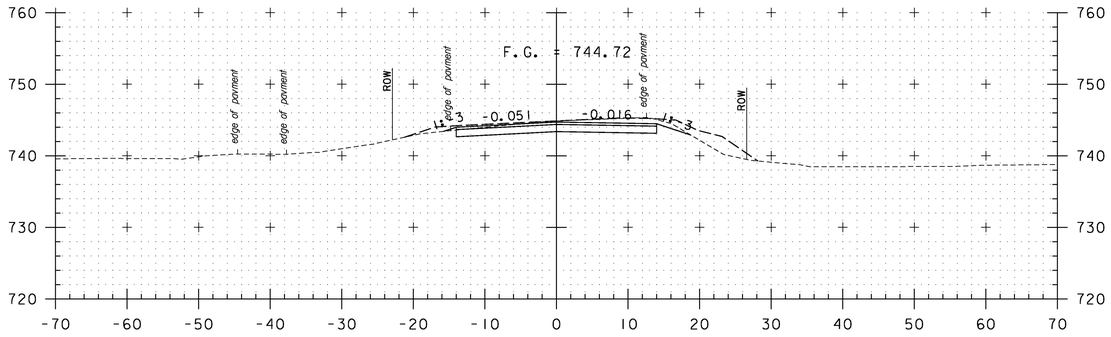

100+50

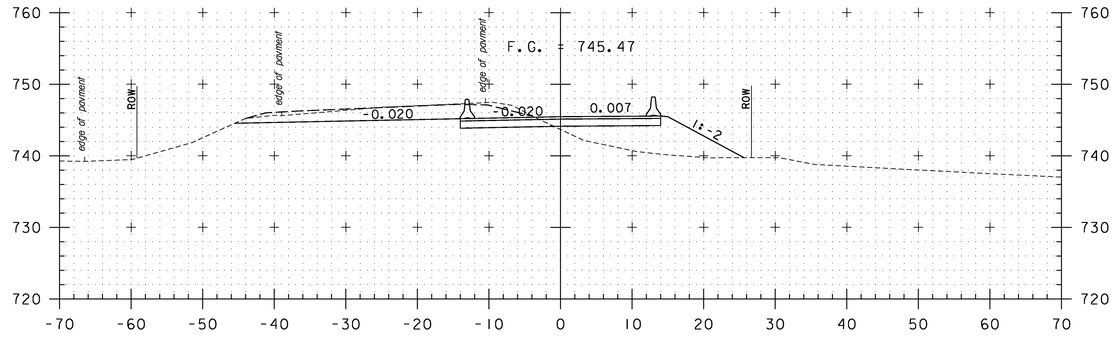

102+00

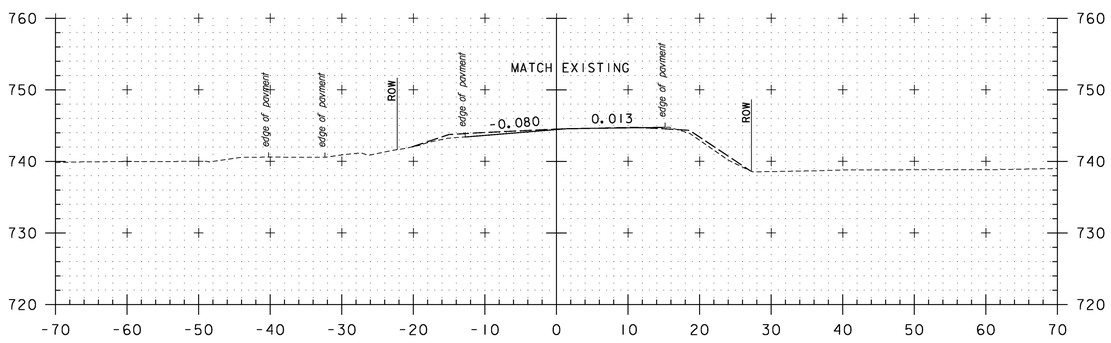

100+00

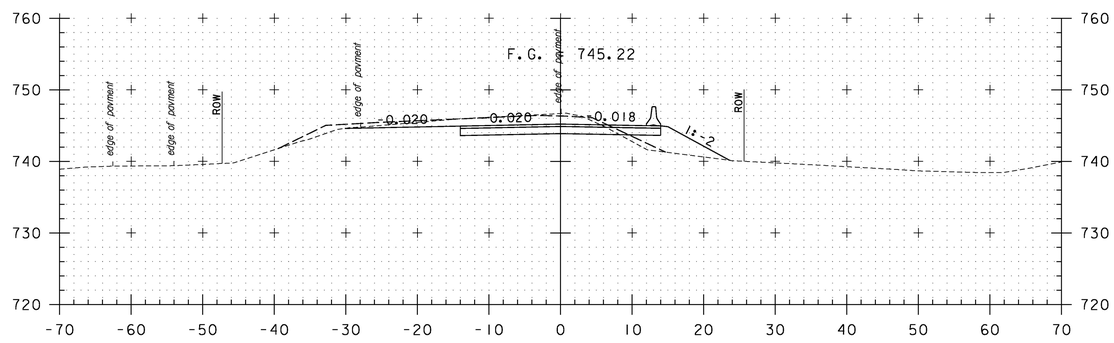

101+50

STA. 100+00 TO STA. 102+50

CLD 12-0120 MODEL: TEMP BRIDGE XS 1

PROJECT NAME: STOWE
PROJECT NUMBER: BRF 0235(15)

FILE NAME: z88cl90xsDetour.dgn
PROJECT LEADER: J. BYATT
DESIGNED BY: K. RUTTER
TEMP DETOUR CROSS SECTIONS

PLOT DATE: 5/8/2015
DRAWN BY: K. RUTTER
CHECKED BY: C. GREGORY
SHEET 60 OF 79

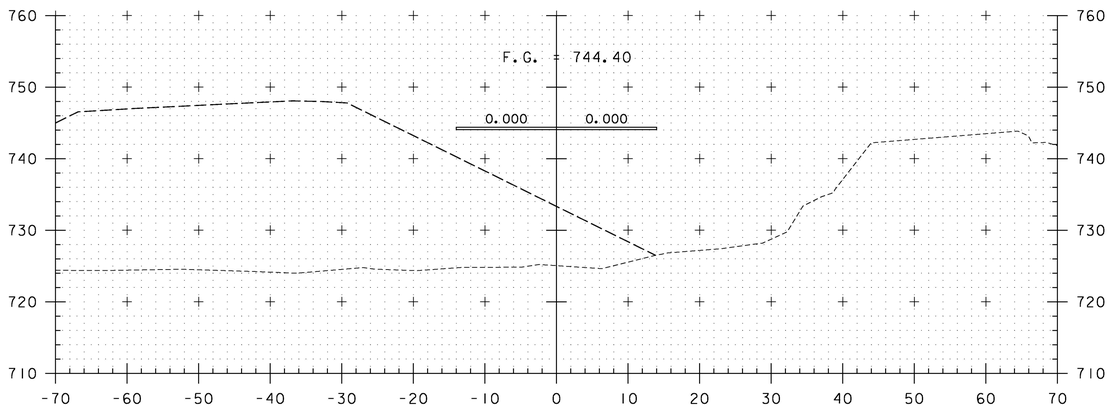

103+50

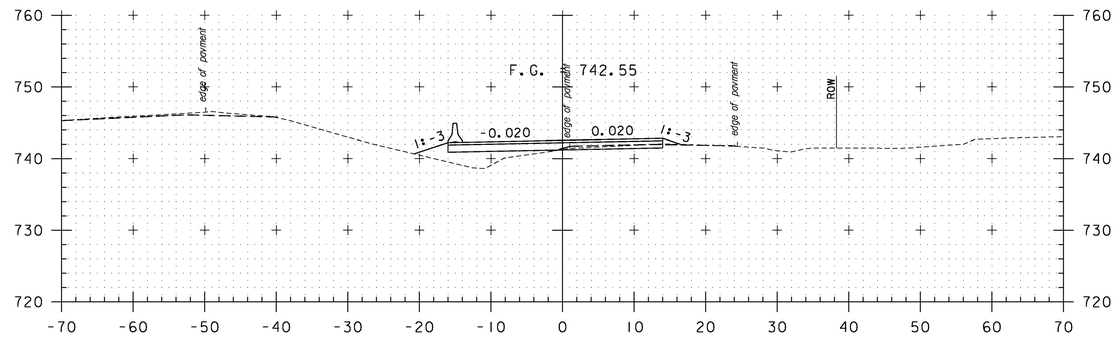

105+00

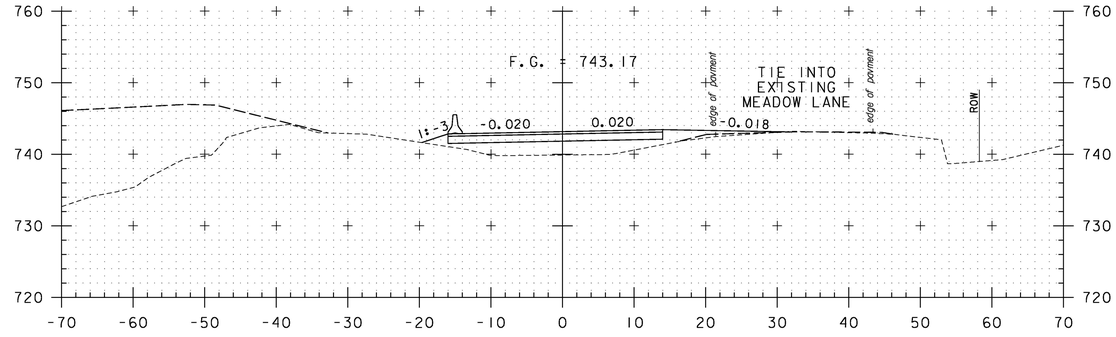

104+50

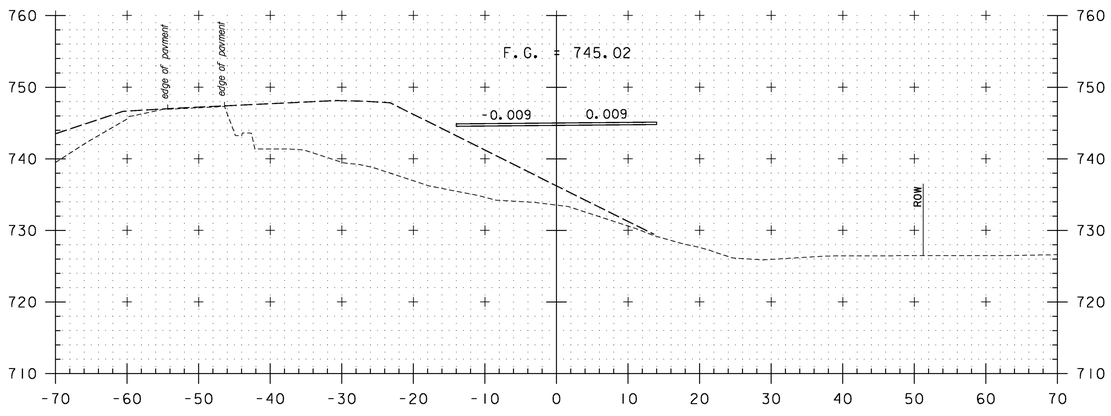

103+00

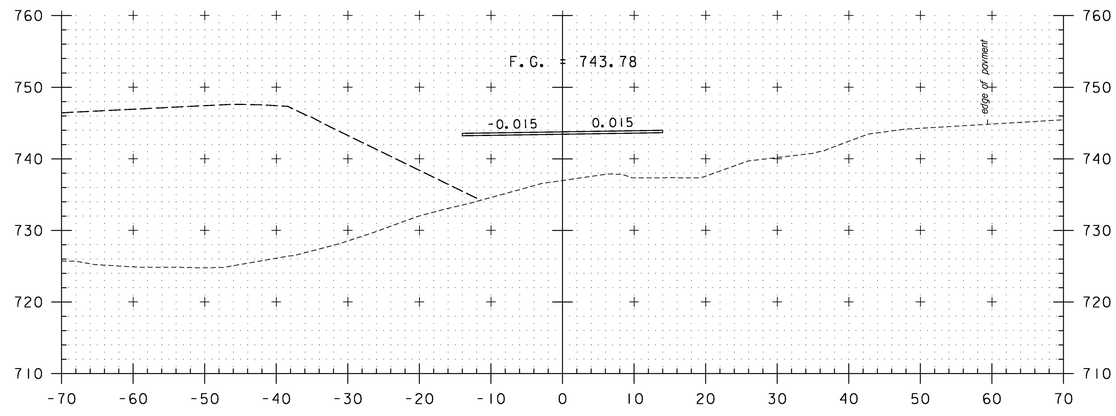

104+00

STA. 103+00 TO STA. 105+00

PROJECT NAME: STOWE
PROJECT NUMBER: BRF 0235(15)

FILE NAME: z88cl90xsDetour.dgn
PROJECT LEADER: J. BYATT
DESIGNED BY: K. RUTTER
TEMP DETOUR CROSS SECTIONS

PLOT DATE: 5/8/2015
DRAWN BY: K. RUTTER
CHECKED BY: C. GREGORY
SHEET 61 OF 79

CLD 12-020 MODEL: TEMP BRIDGE XS 2

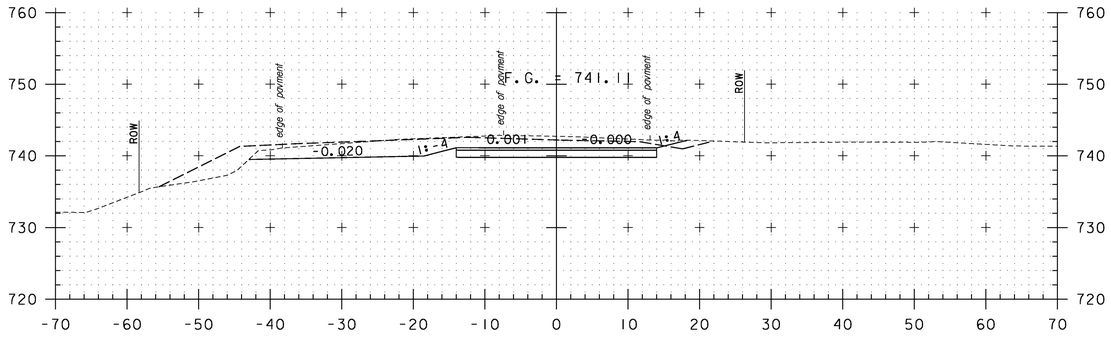

106+50

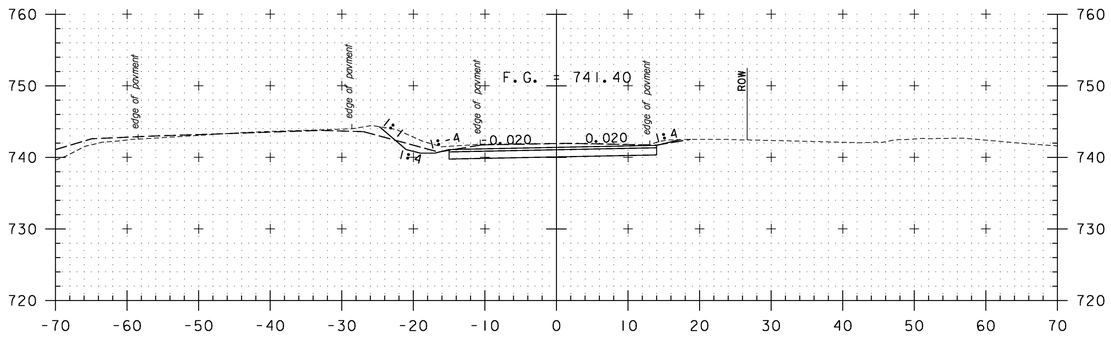

106+00

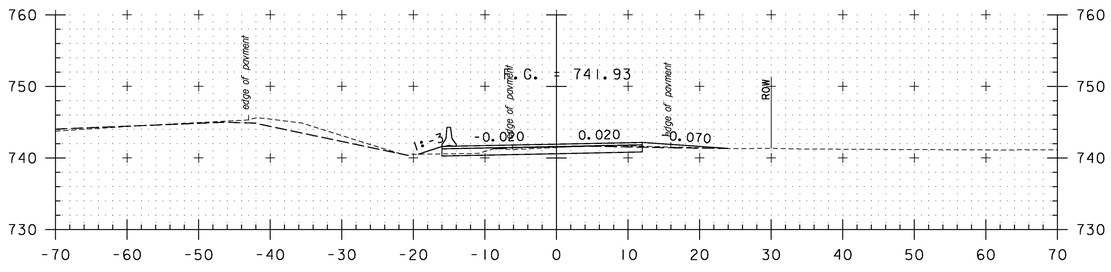

105+50

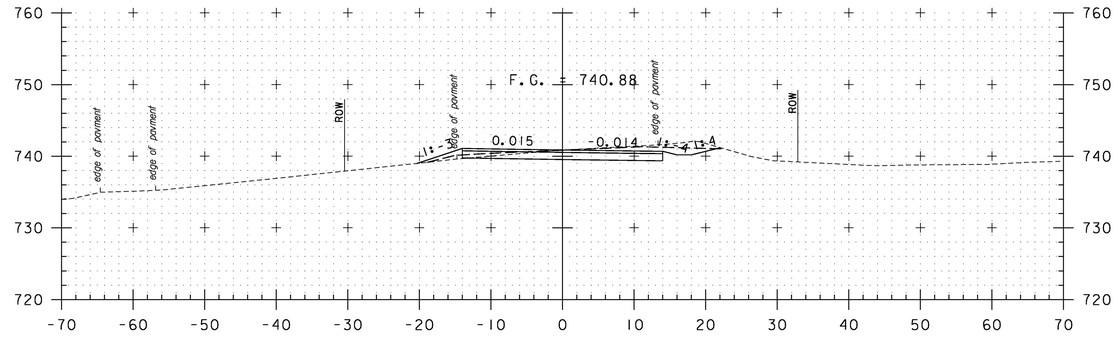

107+50

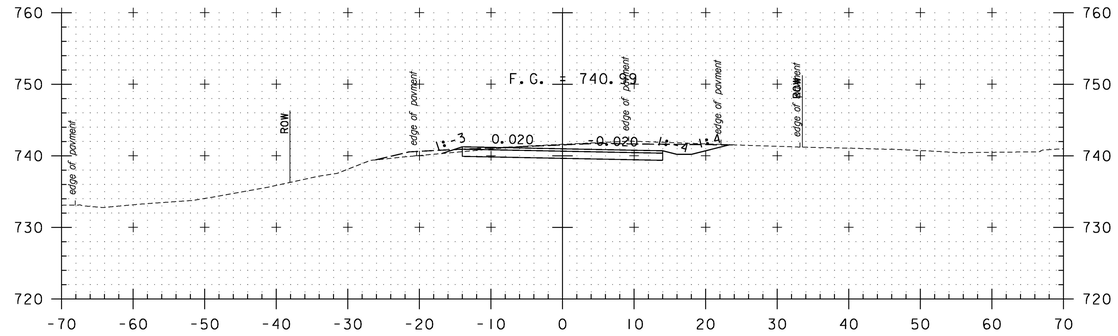

107+00

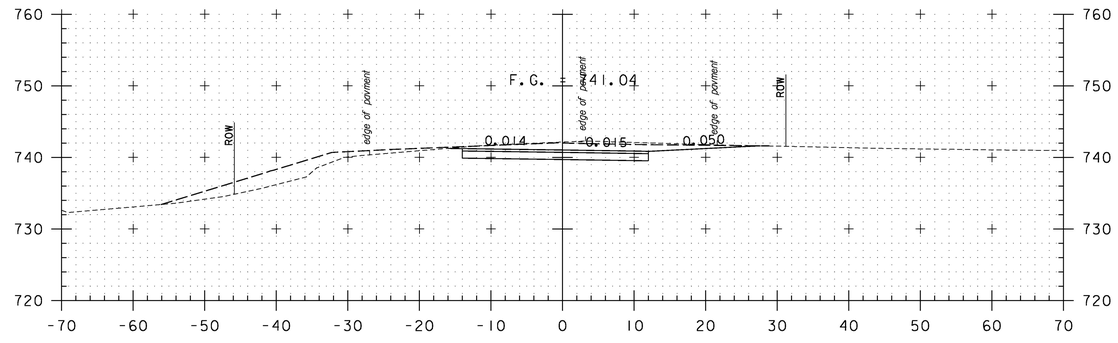

106+80

STA. 105+50 TO STA. 107+50

PROJECT NAME: STOWE
PROJECT NUMBER: BRF 0235(15)

FILE NAME: z88cl90xsDetour.dgn
PROJECT LEADER: J. BYATT
DESIGNED BY: K. RUTTER
TEMP DETOUR CROSS SECTIONS

PLOT DATE: 5/8/2015
DRAWN BY: K. RUTTER
CHECKED BY: C. GREGORY
SHEET 62 OF 79

CLD 12-0120 MODEL: TEMP BRIDGE XS 3

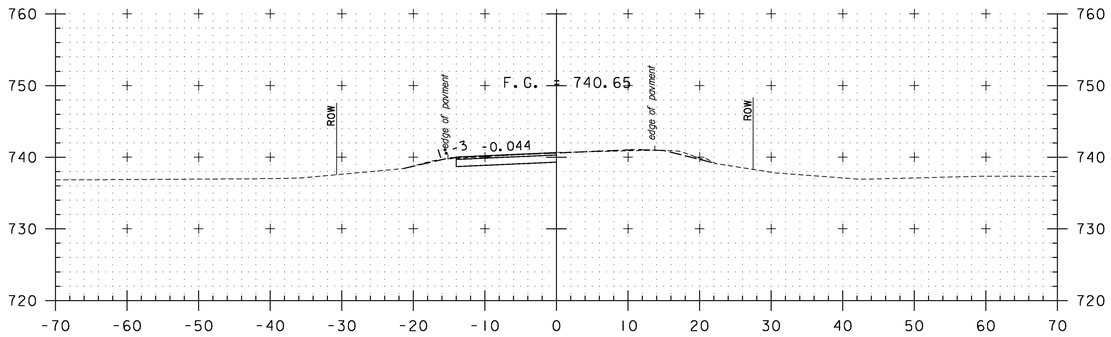

108+50

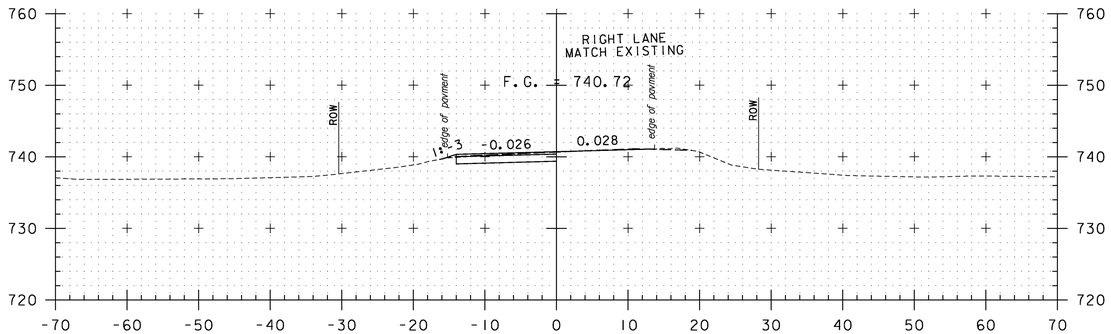

108+20

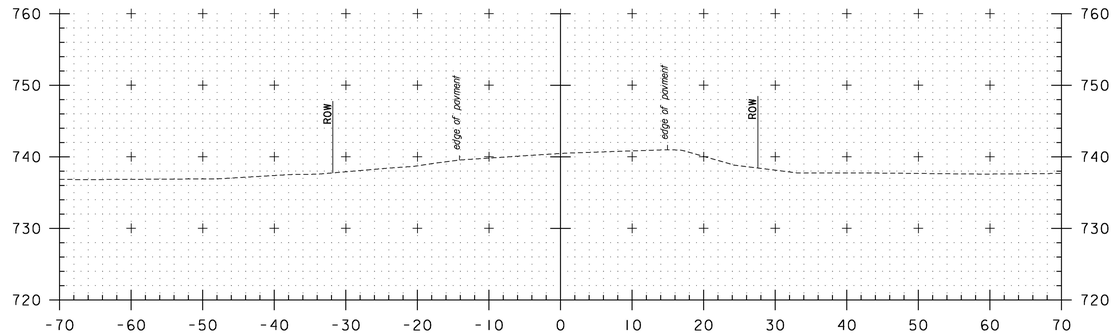

109+00

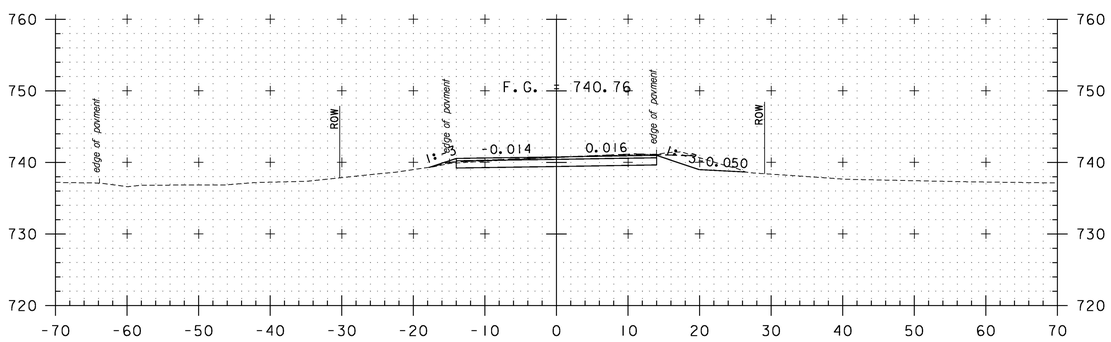

108+00

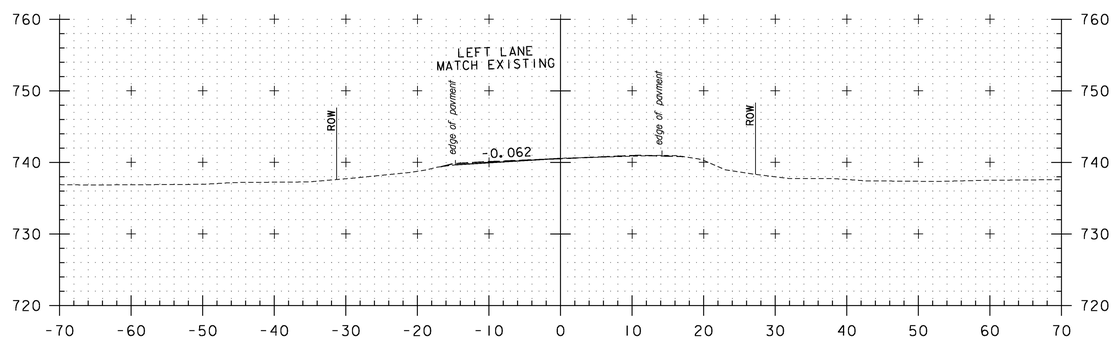

108+80

STA. 108+00 TO STA. 109+00

PROJECT NAME: STOWE
PROJECT NUMBER: BRF 0235(15)

FILE NAME: z88cl90xsDetour.dgn
PROJECT LEADER: J. BYATT
DESIGNED BY: K. RUTTER
TEMP DETOUR CROSS SECTIONS

PLOT DATE: 5/8/2015
DRAWN BY: K. RUTTER
CHECKED BY: C. GREGORY
SHEET 63 OF 79

CLD 12-0120 MODEL: TEMP BRIDGE XS 4

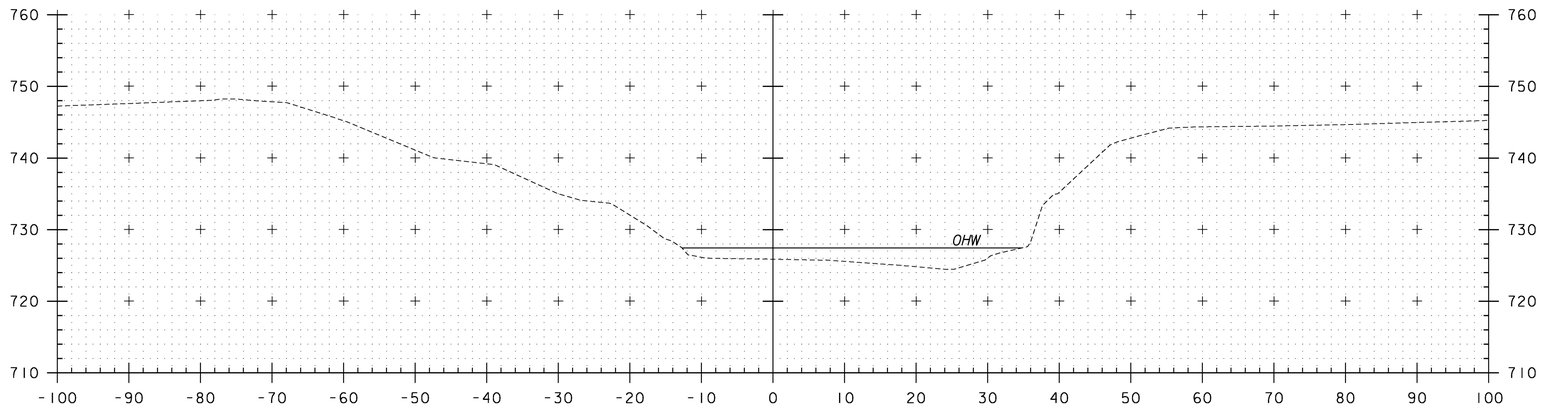

51+25

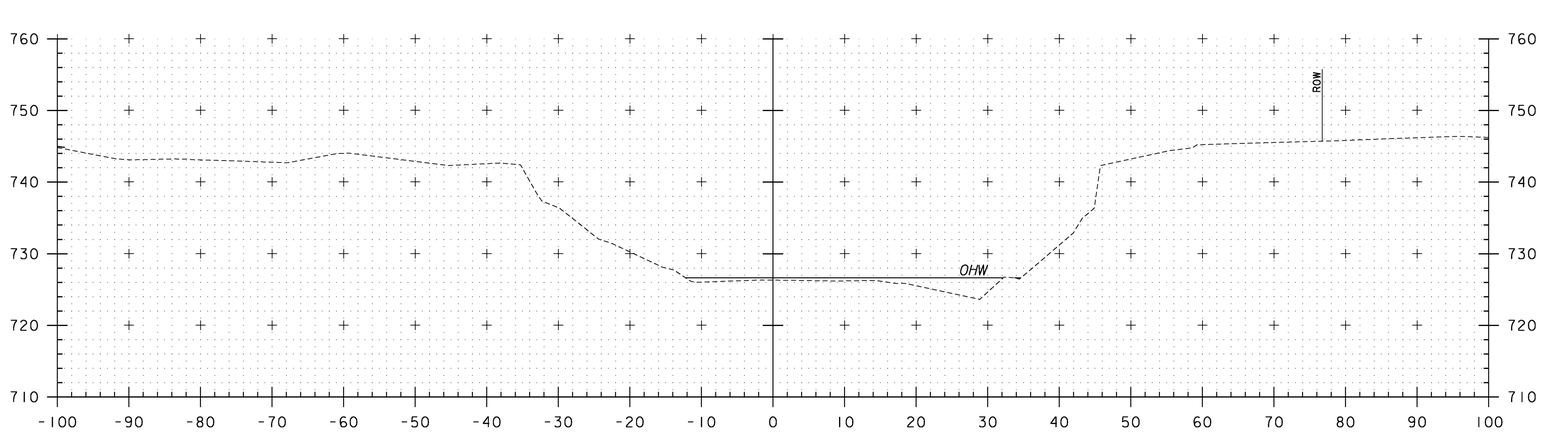

51+00

STA. 51+00 TO STA. 51+25

PROJECT NAME: STOWE	
PROJECT NUMBER: BRF 0235(15)	
FILE NAME: z88cl90xsChan.dgn	PLOT DATE: 5/8/2015
PROJECT LEADER: J. BYATT	DRAWN BY: M. SMITH
DESIGNED BY: J. FRENCH	CHECKED BY: J. BYATT
CHANNEL CROSS SECTIONS	SHEET 64 OF 79

CLD CONSULTING ENGINEERS

CLD 12-0120 MODEL: CHANNEL XS 1

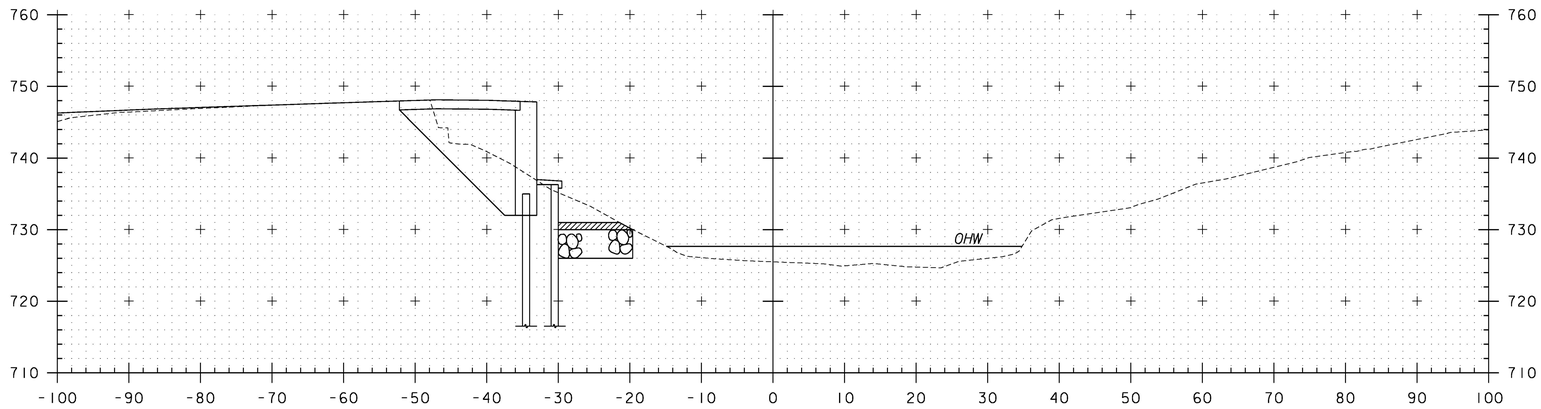

51+50

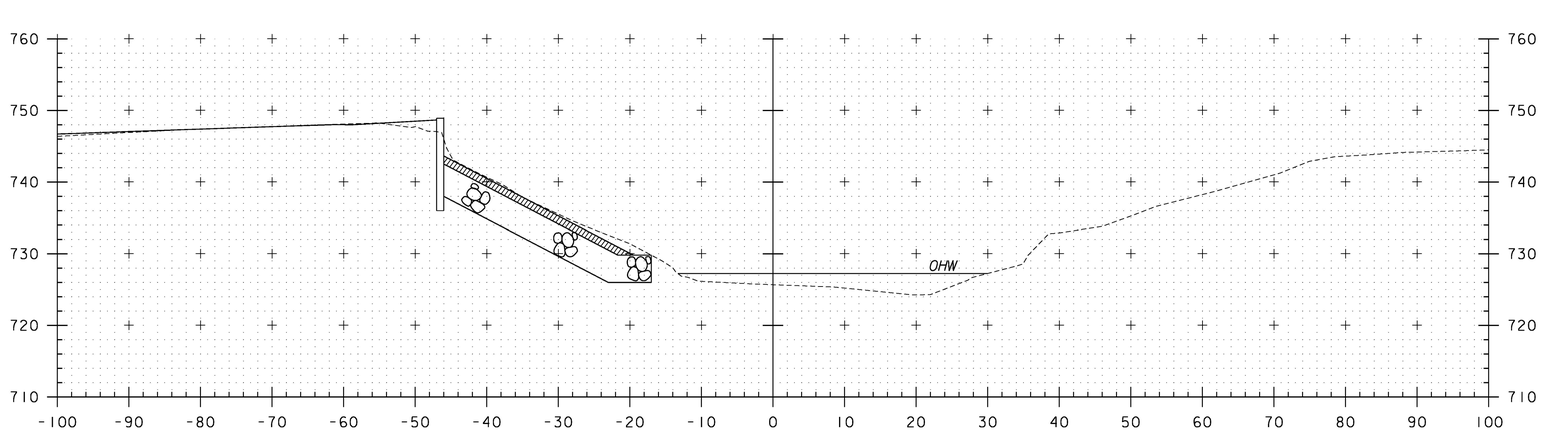

51+40

STA. 51+30 LT
BEGIN UNCLASSIFIED CHANNEL EXCAVATION
BEGIN GEOTEXTILE UNDER STONE FILL
BEGIN STONE FILL, TYPE IV
BEGIN GRUBBING MATERIAL

STA. 51+40 TO STA. 51+50

PROJECT NAME:	STOWE
PROJECT NUMBER:	BRF 0235(15)
FILE NAME: z88cl90xsChan.dgn	PLOT DATE: 5/8/2015
PROJECT LEADER: J. BYATT	DRAWN BY: M. SMITH
DESIGNED BY: J. FRENCH	CHECKED BY: J. BYATT
CHANNEL CROSS SECTIONS	SHEET 65 OF 79

CLD 12-0120 MODEL: CHANNEL XS 2

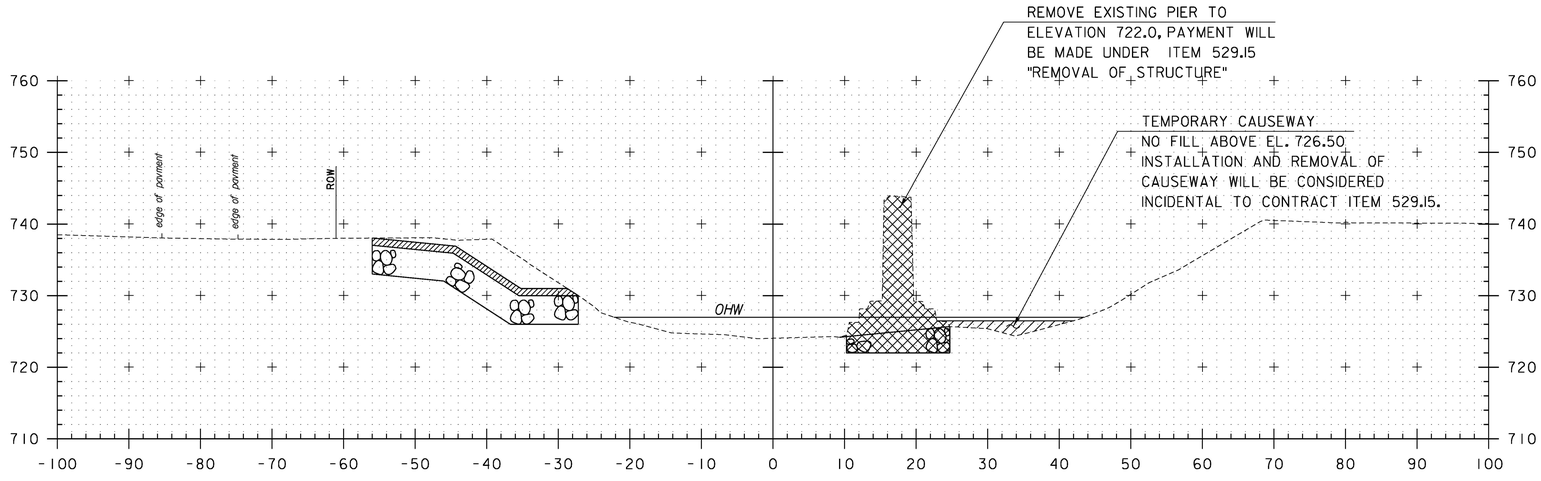

52+00

STA. 51+90.50 PIER
BEGIN GEOTEXTILE UNDER STONE FILL
BEGIN STONE FILL TYPE IV

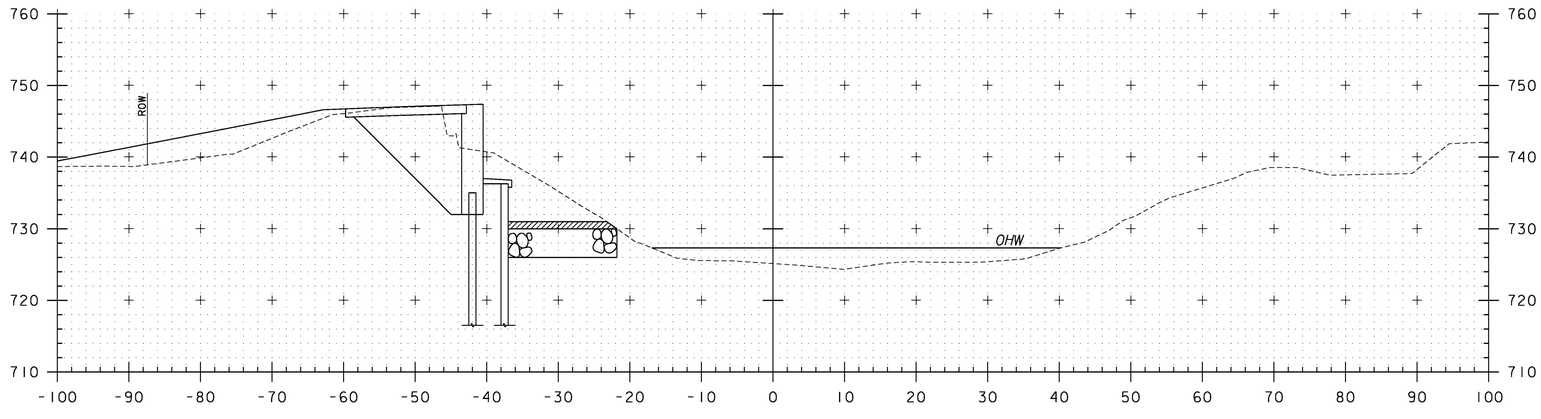

51+75

STA. 51+75 TO STA. 52+00

PROJECT NAME: STOWE
PROJECT NUMBER: BRF 0235(15)

FILE NAME: z88cl90xsChan.dgn
PROJECT LEADER: J. BYATT
DESIGNED BY: J. FRENCH
CHANNEL CROSS SECTIONS

PLOT DATE: 5/8/2015
DRAWN BY: M. SMITH
CHECKED BY: J. BYATT
SHEET 66 OF 79

CLD 12-0120 MODEL: CHANNEL XS 3

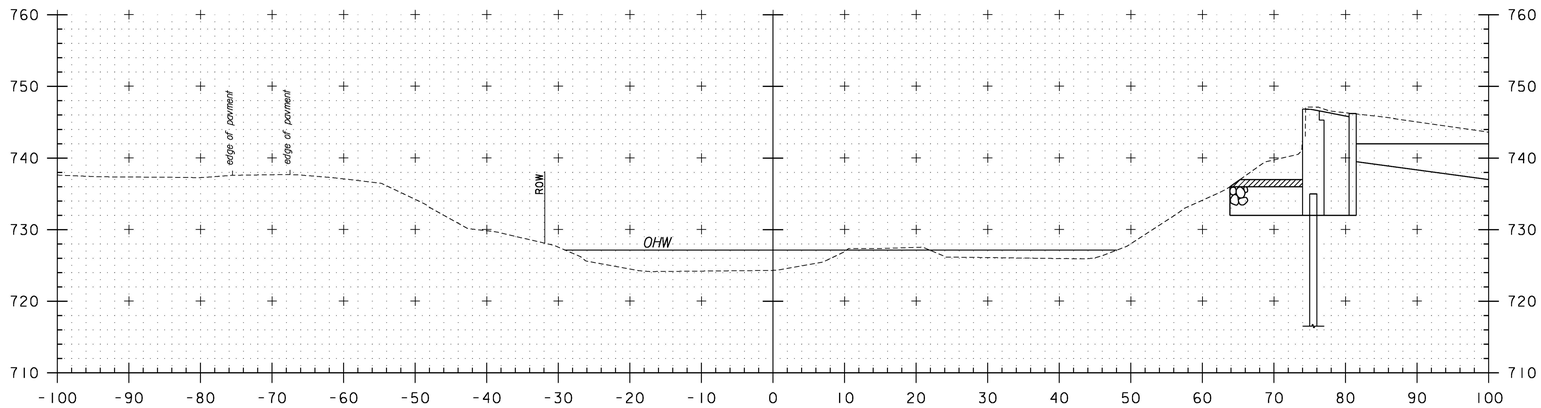

52+50

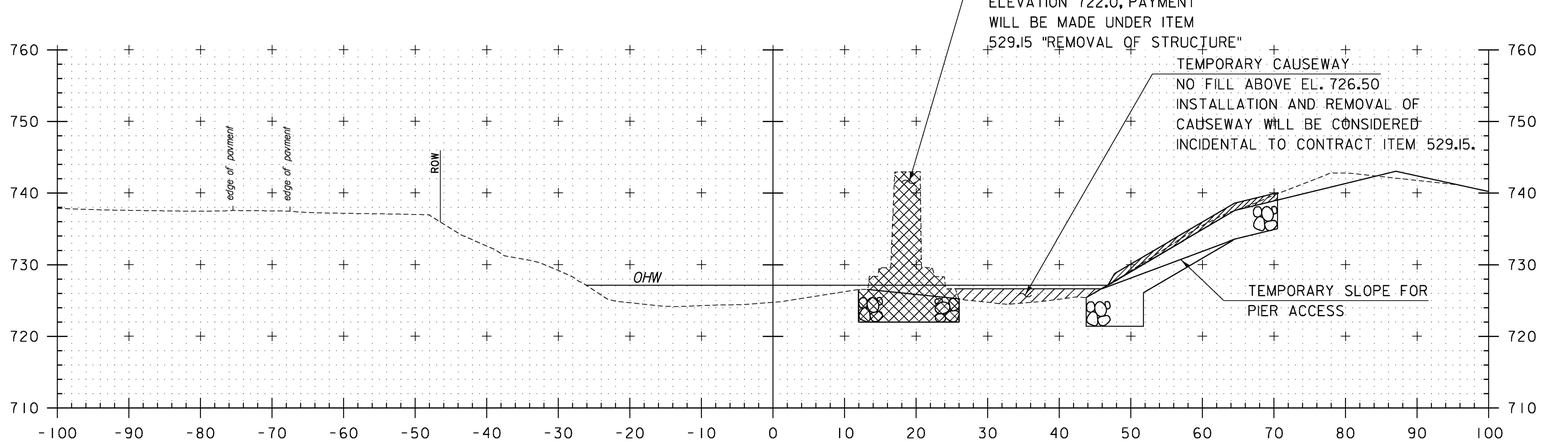

STA. 52+14 LT
END UNCLASSIFIED CHANNEL EXCAVATION
END GEOTEXTILE UNDER STONE FILL
END STONE FILL, TYPE IV
END GRUBBING MATERIAL

52+25

STA. 52+41.50
END GEOTEXTILE
UNDER STONE FILL
END STONE FILL, TYPE IV

STA. 52+15.25 RT
BEGIN UNCLASSIFIED CHANNEL EXCAVATION
BEGIN GEOTEXTILE UNDER STONE FILL
BEGIN STONE FILL, TYPE IV
BEGIN GRUBBING MATERIAL

STA. 52+25 TO STA. 52+50

PROJECT NAME: STOWE
PROJECT NUMBER: BRF 0235(15)

FILE NAME: z88cl90xsChan.dgn
PROJECT LEADER: J. BYATT
DESIGNED BY: J. FRENCH
CHANNEL CROSS SECTIONS

PLOT DATE: 5/8/2015
DRAWN BY: M. SMITH
CHECKED BY: J. BYATT
SHEET 67 OF 79

CLD 12-0120 MODEL: CHANNEL XS 4

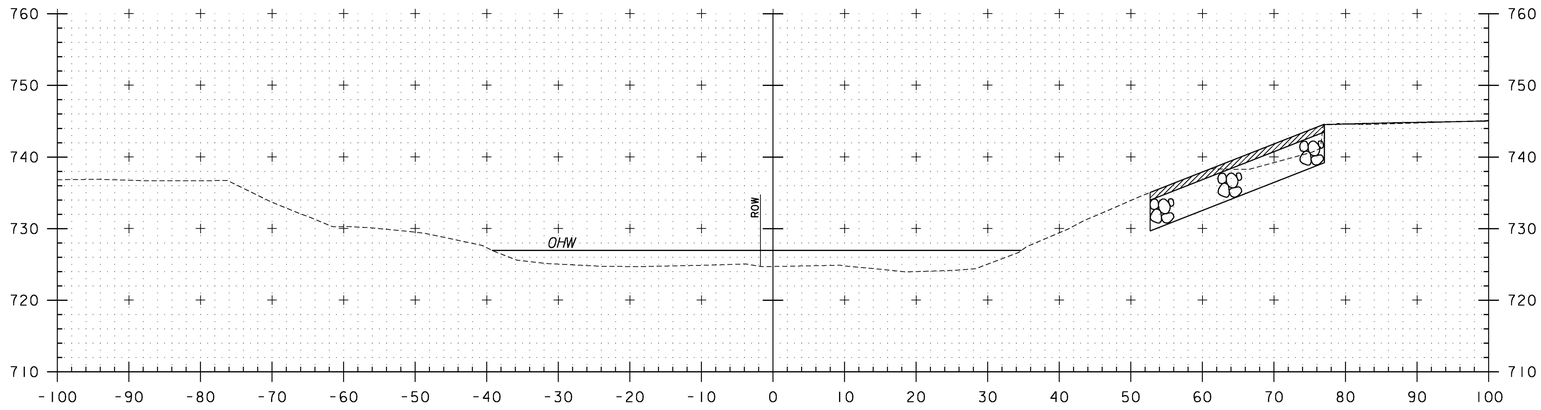

53+00

STA. 53+10.5 RT
END UNCLASSIFIED CHANNEL EXCAVATION
END GEOTEXTILE UNDER STONE FILL
END STONE FILL, TYPE IV
END GRUBBING MATERIAL

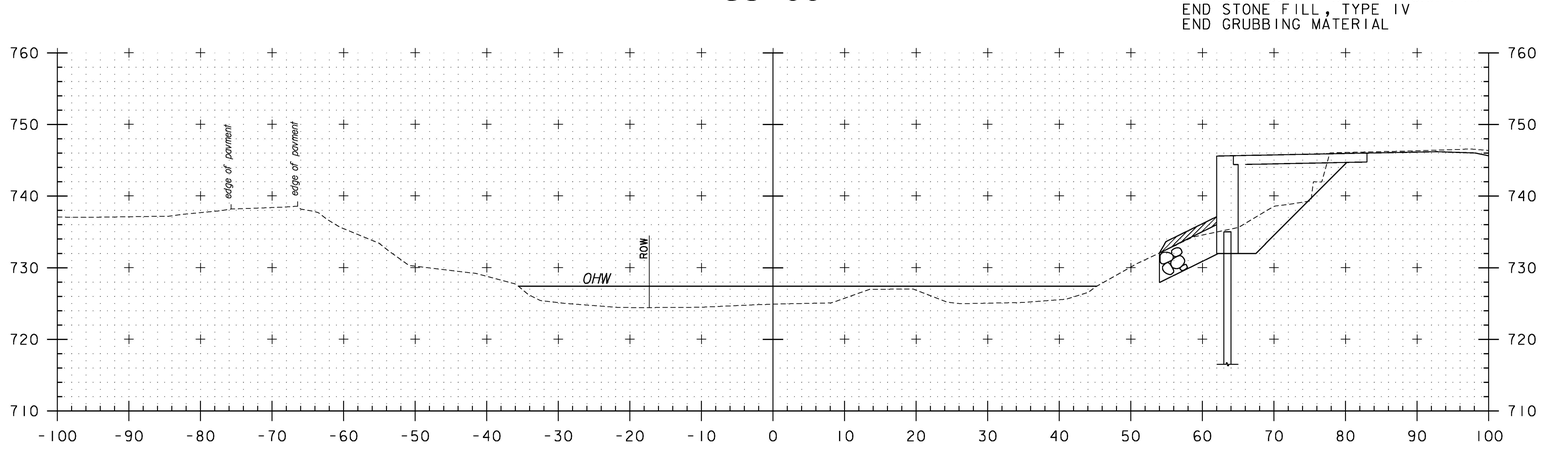

52+75

STA. 52+75 TO STA. 53+00

PROJECT NAME: STOWE
PROJECT NUMBER: BRF 0235(15)

FILE NAME: z88cl90xsChan.dgn
PROJECT LEADER: J. BYATT
DESIGNED BY: J. FRENCH
CHANNEL CROSS SECTIONS

PLOT DATE: 5/8/2015
DRAWN BY: M. SMITH
CHECKED BY: J. BYATT
SHEET 68 OF 79

CLD 12-0120 MODEL: CHANNEL XS 5

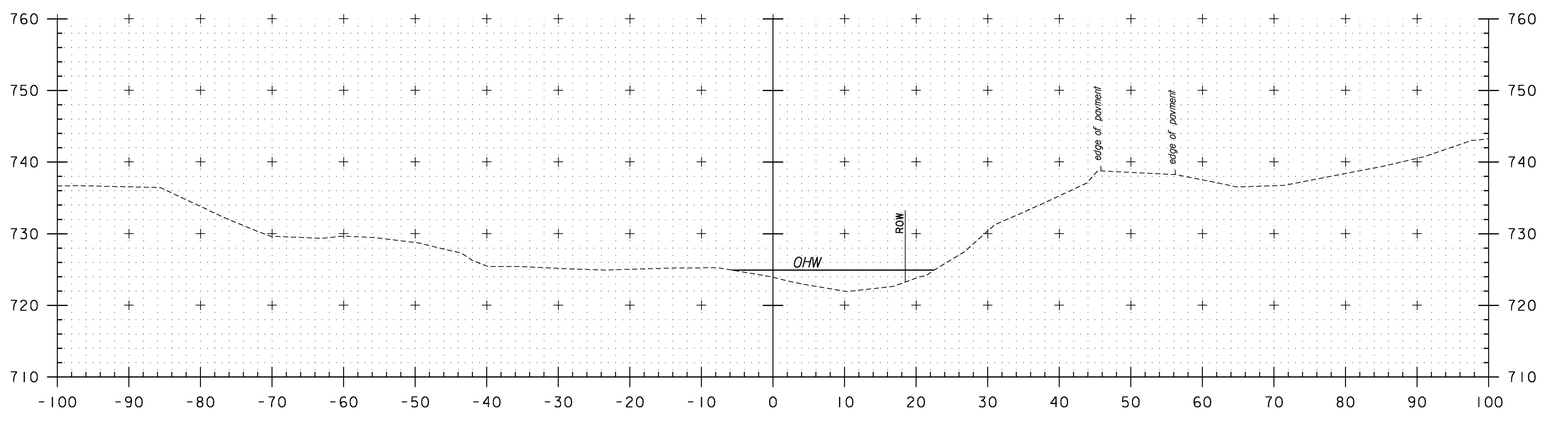

53+25

STA. 53+25

PROJECT NAME:	STOWE
PROJECT NUMBER:	BRF 0235(15)

FILE NAME: z88cl90xsChan.dgn	PLOT DATE: 5/8/2015
PROJECT LEADER: J. BYATT	DRAWN BY: M. SMITH
DESIGNED BY: J. FRENCH	CHECKED BY: J. BYATT
CHANNEL CROSS SECTIONS	SHEET 69 OF 79

CLD

CONSULTING ENGINEERS

CLD 12-0120 MODEL: CHANNEL XS 6

EPSC PLAN NARRATIVE

1.1 PROJECT DESCRIPTION

THIS PROJECT INVOLVES THE REPLACEMENT OF VT ROUTE 108 BRIDGE 3 OVER THE WEST BRANCH OF THE LITTLE RIVER. VT ROUTE 108 BRIDGE 3 IS LOCATED IN THE TOWN OF STOWE, APPROXIMATELY AT THE INTERSECTION OF VT ROUTE 108 AND MEADOW LANE. A TEMPORARY DETOUR WILL BE REQUIRED AND A TEMPORARY BRIDGE WILL BE BUILT TO ACCOMMODATE THE DETOUR. THE TEMPORARY BRIDGE WILL BE LOCATED SOUTH OF THE BRIDGE REPLACEMENT. MEADOW LANE WILL BE PARTIALLY USED FOR THE DETOUR.

NOTE: AREA OF DISTURBANCE INCLUDES LIMITS OF EARTH DISTURBANCE WITHIN THE PROJECT AREA, AS WELL AS WASTE, BORROW AND STAGING AREAS, AND OTHER EARTH DISTURBING ACTIVITIES WITHIN OR DIRECTLY ADJACENT TO THE PROJECT LIMITS AS SHOWN ON THE ATTACHED EPSC PLAN.

TOTAL AREA OF DISTURBANCE AS SHOWN ON THE ATTACHED EPSC PLAN IS APPROXIMATELY 1.61 ACRES.

IT IS ANTICIPATED THAT THIS PROJECT WILL LAST ONE AND A HALF CONSTRUCTION SEASONS.

1.2 SITE INVENTORY

1.2.1 TOPOGRAPHY

THE TOPOGRAPHY OF THE AREA IS CHARACTERIZED AS HILLY TO MOUNTAINOUS. AN OPEN FIELD WITH A PAVED BIKE PATH IS LOCATED NORTH OF THE BRIDGE. SOUTHWEST OF THE BRIDGE IS AN INN WITH A LARGE DIRT/GRAVEL PARKING AREA AND LANDSCAPING ADJACENT TO THE TOP OF THE RIVER BANK. SOUTHEAST OF THE BRIDGE IS MEADOW LANE, WHICH IS UNPAVED. AN INN AND RESIDENCE ARE LOCATED ON MEADOW LANE WITHIN THE PROJECT AREA. THEY ARE BOTH LOCATED ON THE OPPOSITE SIDE OF MEADOW LANE FROM THE WEST BRANCH OF THE LITTLE RIVER.

1.2.2 DRAINAGE, WATERWAYS, BODIES OF WATER, AND PROXIMITY TO NATURAL OR MAN-MADE WATER FEATURES

THE WEST BRANCH OF THE LITTLE RIVER IS THE ONLY WATER SOURCE ON THE PROJECT SITE. THE STREAM IS CHARACTERIZED AS SINUOUS, SEMI-ALLUVIAL, INCISED, AND WITH PAST DEGRADATION. THE STREAM BED CONSISTS OF GRAVEL, COBBLES, SOME BOULDERS, AND SOME LEDGE UPSTREAM. THE DRAINAGE AREA IS 23.8 SQUARE MILES.

1.2.3 VEGETATION

THE VEGETATION IN THE PROJECT AREA CONSISTS MOSTLY OF OPEN LANDSCAPED AREAS OUTSIDE OF THE RIVER BANK WITH ONLY A FEW TREES ALONG THE BIKE PATH AND THE INN LOCATED SOUTHWEST OF THE BRIDGE. THE RIVER BANK IS MORE DENSE WITH TREES OF VARIOUS TYPES AND SIZES.

1.2.4 SOILS

ALL SOIL DATA CAME FROM THE U.S. DEPARTMENT OF AGRICULTURE SOIL CONSERVATION SERVICE FOR THE COUNTY OF LAMOILLE, VERMONT. SOILS ON THE PROJECT SITE ARE: COLTON-DUXBURY COMPLEX, 2 TO 8 PERCENT SLOPES, “K FACTOR” = 0.17, LYMAN-TUNBRIDGE FINE SANDY LOAMS, VERY ROCKY, 25 TO 60 PERCENT SLOPES, “K FACTOR” = 0.28, AND PODUNK FINE SANDY LOAM, “K FACTOR” = 0.24.

NOTE: K-VALUES GENERALLY INDICATE THE FOLLOWING:
0.0-0.23 = LOW EROSION POTENTIAL
0.24-0.36 = MODERATE EROSION POTENTIAL
0.37 AND HIGHER = HIGH EROSION POTENTIAL

1.2.5 SENSITIVE RESOURCE AREAS

CRITICAL HABITATS: NO
HISTORICAL OR ARCHEOLOGICAL AREAS: YES. THE INN AND RESIDENCE LOCATED ON MEADOW LANE SOUTHEAST OF THE BRIDGE ARE HISTORICAL BUILDINGS.
PRIME AGRICULTURAL LAND: NO
THREATENED AND ENDANGERED SPECIES: NO
WATER RESOURCE: WEST BRANCH OF THE LITTLE RIVER
WETLANDS: NO

1.3 RISK EVALUATION

THIS PROJECT FALLS UNDER THE JURISDICTION OF GENERAL PERMIT 3-9020 FOR STORMWATER RUNOFF FROM CONSTRUCTION SITES FOR LOW RISK PROJECTS. ANY MODIFICATIONS TO THE PROJECT THAT INCREASE THE RISK TO ENVIRONMENTAL RESOURCES SHALL BE EVALUATED IN ACCORDANCE WITH THE PERMIT REQUIREMENTS. THE CONTRACTOR WILL BE RESPONSIBLE FOR ANY ADDITIONAL PERMITTING.

1.4 EROSION PREVENTION AND SEDIMENT CONTROL

THE EROSION CONTROL PLANS ARE MEANT AS A GUIDELINE FOR PREVENTING EROSION AND CONTROLLING SEDIMENT TRANSPORT. THE PRINCIPLES OUTLINED IN THIS NARRATIVE CONSIST OF APPLYING MEASURES THROUGHOUT CONSTRUCTION OF THE PROJECT IN ORDER TO MINIMIZE SEDIMENT TRANSPORT TO THE RECEIVING WATERS. THE MEASURES INCLUDE STABILIZATION AND STRUCTURAL PRACTICES, STORM WATER CONTROLS AND OTHER POLLUTION PREVENTION PRACTICES. THEY HAVE BEEN PROPOSED BY THE DESIGNER AS A BASIS FOR PROTECTING RESOURCES AND WILL NEED TO BE BUILT UPON BASED ON THE SPECIFIC MEANS AND METHODS OF THE CONTRACTOR. REFER TO THE LOW RISK SITE HANDBOOK AND APPROPRIATE DETAIL SHEETS FOR SPECIFIC GUIDANCE AND CONSTRUCTION DETAILING.

ALL MEASURES SHALL BE REGULARLY MAINTAINED AND SHALL BE CHECKED FOR SEDIMENT BUILD-UP. SEDIMENT SHALL BE DISPOSED OF AT AN APPROVED SITE WHERE IT WILL NOT BE SUBJECT TO EROSION.

1.4.1 MARK SITE BOUNDARIES

SITE BOUNDARIES AND AREAS CONSTRUCTION EQUIPMENT CAN ACCESS SHALL BE DELINEATED.

PROJECT DEMARCATION FENCING (PDF) SHALL BE USED TO PHYSICALLY MARK SITE BOUNDARIES. BECAUSE THIS PROJECT FALLS UNDER THE CGP 3-9020, BARRIER FENCE SHALL BE USED INSTEAD OF PROJECT DEMARCATION FENCE WITHIN 100 FEET OF A WATER RESOURCE (STREAM, BROOK, LAKE, POND, WETLAND, ETC).

1.4.2 LIMIT DISTURBANCE AREA

PREVENTING INITIAL SOIL EROSION BY MINIMIZING THE EXPOSED AREA IS MUCH MORE EFFECTIVE THAN TREATING ERODED SEDIMENT. EARTH DISTURBANCE CAN BE MINIMIZED THROUGH CONSTRUCTION PHASING BY ONLY OPENING UP EARTH AS NECESSARY. THIS CAN LIMIT THE AREA THAT WILL BE DISTURBED AND EXPOSED TO EROSION. EMPLOY TEMPORARY CONSTRUCTION STABILIZATION PRACTICES IN INCREMENTAL STAGES AS PHASES CHANGE. FOR PROJECTS WHICH FALL UNDER THE CONSTRUCTION GENERAL PERMIT, ONLY THE ACREAGE LISTED ON THE PERMIT AUTHORIZATION MAY BE EXPOSED AT ANY GIVEN TIME.

MAINTAINING VEGETATED BUFFERS ALONG STREAM BANKS, WETLANDS OR OTHER SENSITIVE AREAS IS A CRUCIAL EROSION AND SEDIMENT CONTROL MEASURE THAT SHOULD BE ESTABLISHED WHEREVER POSSIBLE.

1.4.3 SITE ENTRANCE/EXIT STABILIZATION

TRACKING OF SEDIMENT ONTO PUBLIC HIGHWAYS SHALL BE MINIMIZED TO REDUCE THE POTENTIAL FOR RUNOFF ENTERING RECEIVING WATERS. INSTALLATION SHALL COINCIDE WITH THE CONTRACTOR’S PROGRESS SCHEDULE.

STABILIZED CONSTRUCTION ENTRANCES SHALL BE PLACED ANYWHERE EQUIPMENT WILL BE GOING FROM AREAS OF EXPOSED SOILS TO PAVED SURFACES.

STABILIZED CONSTRUCTION ENTRANCES ARE NOT ANTICIPATED ON THIS PROJECT. THE EXISTING ROADWAY WILL BE USED TO ACCESS THE BRIDGE.

1.4.4 INSTALL SEDIMENT BARRIERS

SEDIMENT BARRIERS SHALL BE UTILIZED TO INTERCEPT RUNOFF AND ALLOW SUSPENDED SEDIMENT TO SETTLE OUT. THEY SHALL BE INSTALLED PRIOR TO ANY UP SLOPE WORK.

SILT FENCE WILL BE INSTALLED AS PROPOSED ON THE EPSC PLAN. BECAUSE THIS PROJECT FALLS UNDER THE CGP 3-9020, WOVEN WIRE REINFORCED SILT FENCE SHALL BE USED INSTEAD OF SILT FENCE WITHIN 100 FEET UPSLOPE OF RECEIVING WATERS.

FILTER CURTAINS WILL BE INSTALLED AS PROPOSED ON THE EPSC PLAN.

1.4.5 DIVERT UPLAND RUNOFF

DIVERSIONARY MEASURES SHALL BE USED TO INTERCEPT RUNOFF FROM ABOVE THE CONSTRUCTION AND DIRECT IT AROUND THE DISTURBED AREA SO THAT CLEAN WATER DOES NOT BECOME MUDDIED WHILE TRAVELING OVER EXPOSED SOILS ON THE CONSTRUCTION SITE.

THE PROJECT AREA IS RELATIVELY FLAT. THEREFORE IT IS NOT ANTICIPATED THAT DIVERSION MEASURES WILL BE NECESSARY.

1.4.6 SLOW DOWN CHANNELIZED RUNOFF

CHECK STRUCTURES SHALL BE UTILIZED TO REDUCE THE VELOCITY, AND THUS THE EROSIVE POTENTIAL, OF CONCENTRATED FLOW IN CHANNELS.

STONE CHECK DAMS ARE NOT ANTICIPATED TO BE NEEDED AS DESIGNED.

1.4.7 CONSTRUCT PERMANENT CONTROLS

PERMANENT STORMWATER TREATMENT DEVICES SHALL BE INSTALLED AS SHOWN ON THE PLANS AND IN ACCORDANCE WITH PERMIT CONDITIONS.

1.4.8 STABILIZE EXPOSED SOILS DURING CONSTRUCTION

ALL AREAS OF DISTURBANCE MUST HAVE TEMPORARY STABILIZATION IN PLACE WITHIN 48 HOURS OF DISTURBANCE OR IN ACCORDANCE WITH THE CONSTRUCTION GENERAL PERMIT 3-9020 AUTHORIZATION.

SURFACE ROUGHENING OF ALL EXPOSED SLOPES, COMBINED WITH TEMPORARY MULCHING, SHALL BE UTILIZED ON A REGULAR BASIS. BIODEGRADABLE EROSION CONTROL MATTING OR AN EQUIVALENT SHALL BE USED TO STABILIZE ALL SLOPES STEEPER THAN 1:3.

THE FORECAST OF RAINFALL EVENTS SHALL TRIGGER IMMEDIATE PROTECTION OF EXPOSED SOILS.

TEMPORARY EROSION CONTROL MATTING WILL BE INSTALLED AS PROPOSED ON THE EPSC PLAN, AT A MINIMUM.

1.4.9 WINTER STABILIZATION

VARIOUS MEASURES SPECIFIC TO WINTER MAY BE NECESSARY SHOULD THE PROJECT EXTEND INTO WINTER (OCTOBER 15 THROUGH APRIL 15). REFER TO THE LOW RISK SITE HANDBOOK FOR GUIDANCE.

1.4.10 STABILIZE SOIL AT FINAL GRADE

EXPOSED SOIL MUST BE STABILIZED WITHIN 48 HOURS OF REACHING FINAL GRADE.

SEED, MULCH, FERTILIZER AND LIME SHALL BE USED TO ESTABLISH PERMANENT VEGETATION. FOR SLOPES STEEPER THAN 1:3, BIODEGRADABLE EROSION CONTROL MATTING OR AN EQUIVALENT SHALL BE USED INSTEAD OF MULCH.

1.4.11 DE-WATERING ACTIVITIES

DISCHARGE FROM DEWATERING ACTIVITIES THAT FLOWS OFF OF THE CONSTRUCTION SITE MUST NOT CAUSE OR CONTRIBUTE TO A VIOLATION OF THE VERMONT WATER QUALITY STANDARDS.

1.4.12 INSPECT YOUR SITE

INSPECT THE PROJECT SITE BASED ON SPECIAL PROVISION REQUIREMENTS OR CONSTRUCTION GENERAL PERMIT AUTHORIZATION STIPULATIONS.

1.5 SEQUENCE AND STAGING

THIS SECTION WILL BE DEVELOPED BY THE CONTRACTOR USING THE GUIDANCE OUTLINED IN THE VTRANS EPSC PLAN CONTRACTOR CHECKLIST.

1.5.1 OFF-SITE ACTIVITIES

IN ADDITION TO THE CONTRACTOR CHECKLIST, ANY ACTIVITIES OUTSIDE THE CONSTRUCTION LIMITS SHALL FOLLOW SUBSECTION 105.25 - 105.29 OF THE STANDARD SPECIFICATIONS FOR CONSTRUCTION.

CLD 12-0120 MODEL: 01

CONSULTING ENGINEERS

PROJECT NAME: STOWE
PROJECT NUMBER: BRF 0235(15)

FILE NAME: z88cl90erodet.dgn
PROJECT LEADER: J. BYATT
DESIGNED BY: S. FORTIER
EPSC NARRATIVE

PLOT DATE: 5/8/2015
DRAWN BY: S. FORTIER
CHECKED BY: K. RUTTER
SHEET 70 OF 79

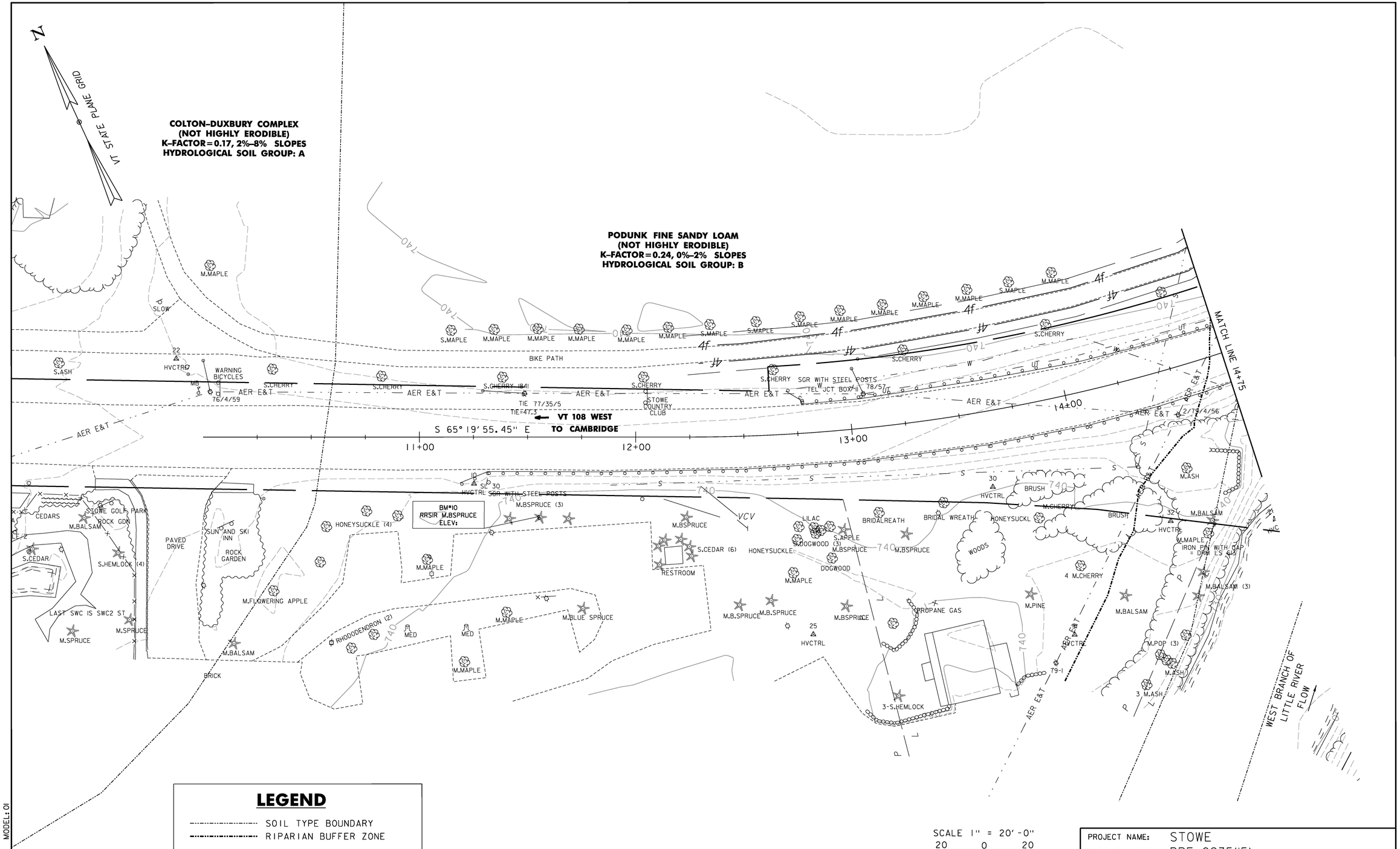

PROJECT NAME: STOWE	
PROJECT NUMBER: BRF 0235(15)	
FILE NAME: z88c190bdreroex.dgn	PLOT DATE: 5/8/2015
PROJECT LEADER: J. BYATT	DRAWN BY: S. FORTIER
DESIGNED BY: S. FORTIER	CHECKED BY: K. RUTTER
EPSC EXISTING CONDITIONS SHEET 1	SHEET 71 OF 79

CONSULTING ENGINEERS

CLD 12-0120 MODEL: 01

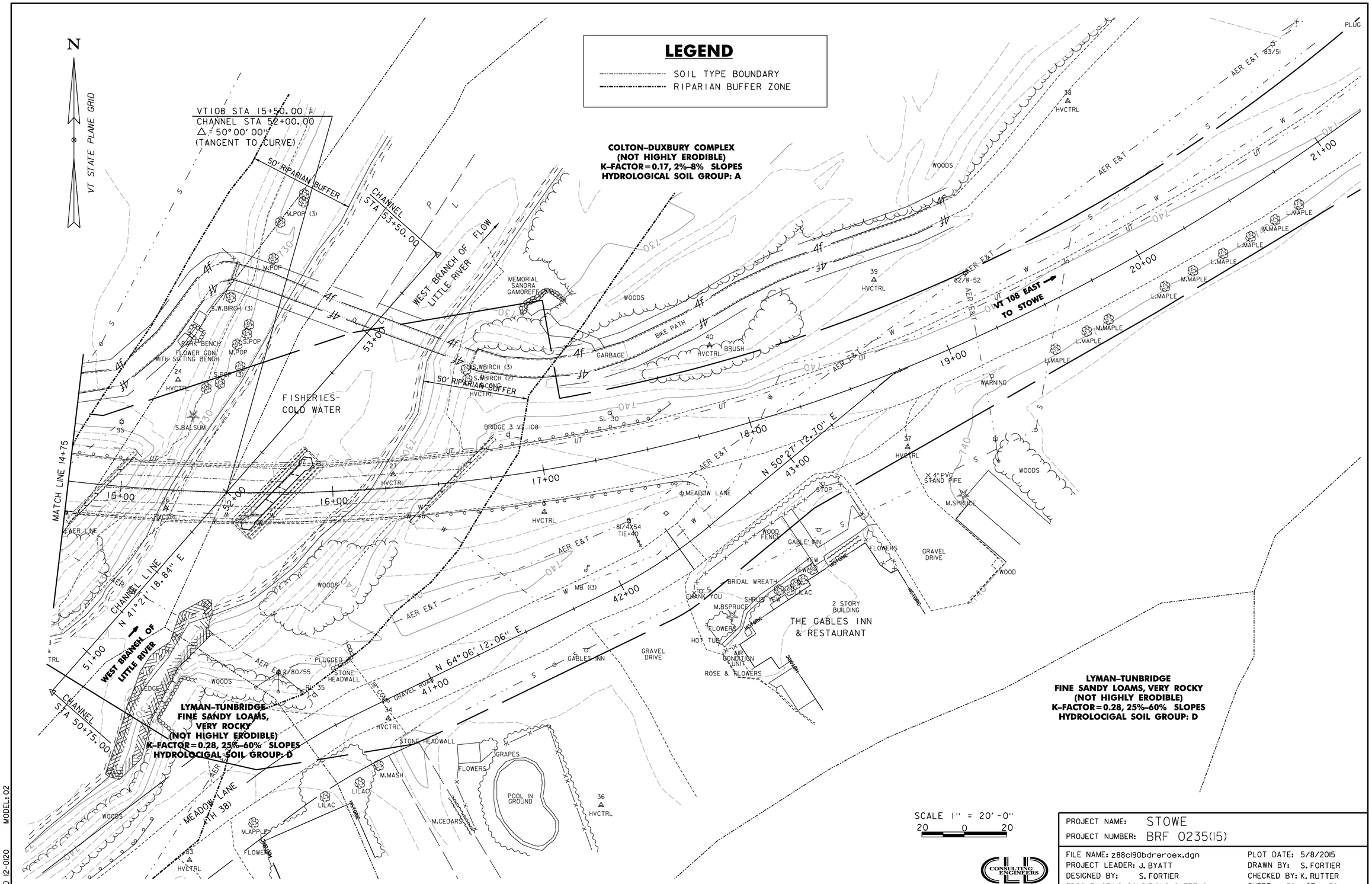

PROJECT NAME: STOWE	
PROJECT NUMBER: BRF 0235(15)	
FILE NAME: z88c190bdreroex.dgn	PLOT DATE: 5/8/2015
PROJECT LEADER: J. BYATT	DRAWN BY: S. FORTIER
DESIGNED BY: S. FORTIER	CHECKED BY: K. RUTTER
EPSC EXISTING CONDITIONS SHEET 2	SHEET 72 OF 79

CLD 12-0120 MODEL: 02

N

VT STATE PLANE GRID

PROJECT DEMARCATION FENCE
10+12 TO 13+72 RT
10+00 TO 14+26 LT

TEMPORARY EROSION MATTING
13+00 TO 14+80 RT
13+00 TO 14+75 LT

BARRIER FENCE
14+26 TO 14+75 LT

GEOTEXTILE FOR SILT FENCE
10+00 TO 14+25 LT
10+12 TO 13+75 RT

GEOTEXTILE FOR SILT FENCE, WOVEN WIRE REINFORCED
14+25 TO 14+75 LT
13+75 TO 14+65 RT

GEOTEXTILE FOR FILTER CURTAIN
14+62 TO 14+75 RT

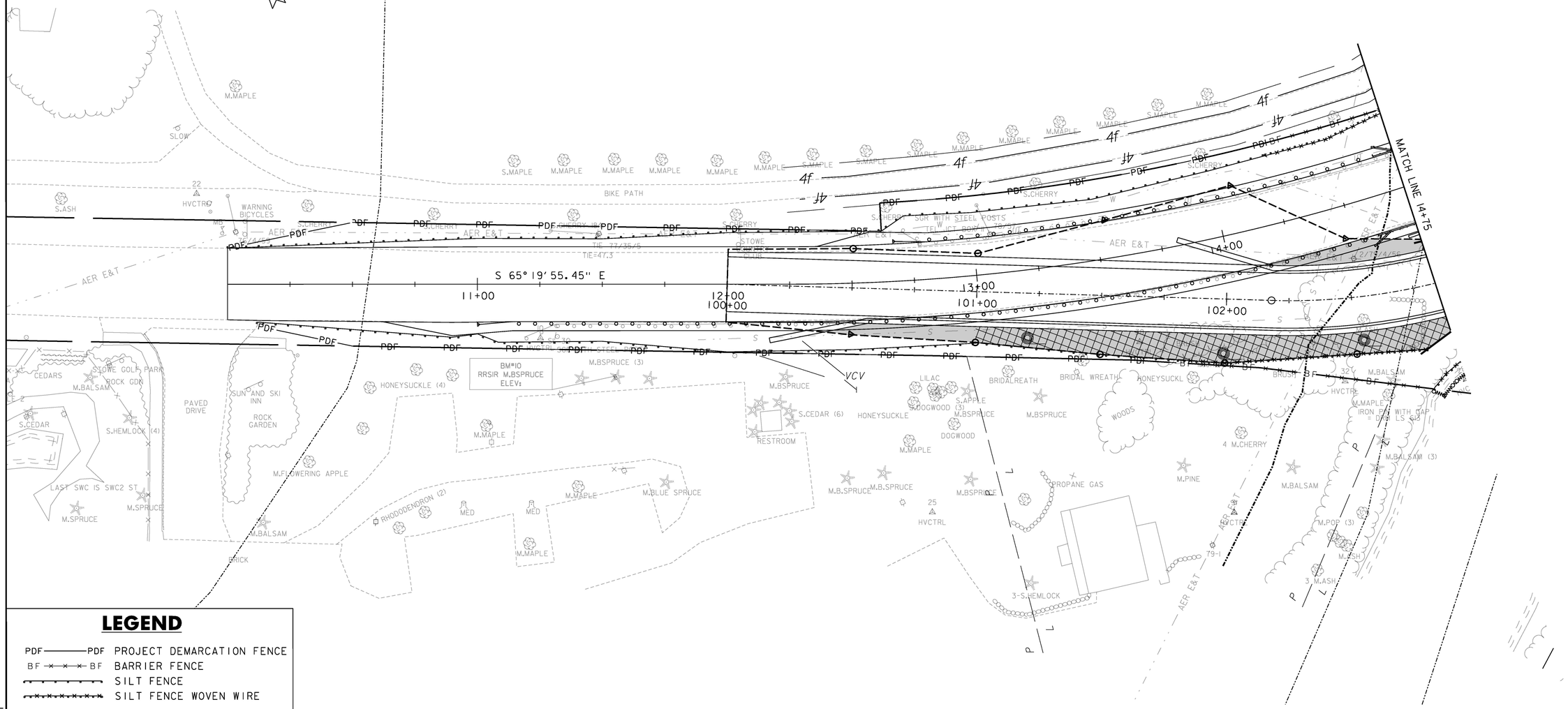

LEGEND

- PDF——PDF PROJECT DEMARCATION FENCE
- BF—×—×—BF BARRIER FENCE
- SILT FENCE
- SILT FENCE WOVEN WIRE
- DISTURBED AREAS REQUIRING TEMPORARY RE-VEGETATION
- TEMPORARY EROSION MATTING
- SOIL TYPE BOUNDARY
- RIPARIAN BUFFER ZONE
- FILTER CURTAIN

SCALE 1" = 20'-0"
20 0 20

CONSULTING ENGINEERS

PROJECT NAME:	STOWE
PROJECT NUMBER:	BRF 0235(15)
FILE NAME: z88cl90bdrerocn.dgn	PLOT DATE: 5/8/2015
PROJECT LEADER: J. BYATT	DRAWN BY: S. FORTIER
DESIGNED BY: S. FORTIER	CHECKED BY: K. RUTTER
EPSC CONSTRUCTION PLAN SHEET 1	SHEET 73 OF 79

MODEL: 01
CLD 12-0120

N

VT STATE PLANE GRID

PROJECT DEMARCATION FENCE
18+66 TO 21+00 RT
17+73 TO 21+00 LT
40+35 TO 41+81 RT
42+22 TO 43+14 RT

BARRIER FENCE
14+75 TO 15+60 LT
16+44 TO 17+73 LT

GEOTEXTILE FOR SILT FENCE
WOVEN WIRE REINFORCED
16+64 TO 17+74 LT
50+80 TO 52+50 LT (CHANNEL)
51+50 TO 52+90 RT (CHANNEL)

GEOTEXTILE FOR SILT FENCE
17+74 TO 21+00 RT

GEOTEXTILE FOR FILTER CURTAIN
50+80 TO 52+50 LT
51+50 TO 52+90 RT

VT108 STA 15+50.00 ±
CHANNEL STA 52+00.00
△ = 50° 00' 00"
(TANGENT TO CURVE)

50' RIPARIAN BUFFER

FISHERIES-
COLD WATER

MATCH LINE 14+75

N 42° 18' 84" E

BRIDGE 3 VT 108

THE GABLES INN
& RESTAURANT

LEGEND

- PDF——PDF PROJECT DEMARCATION FENCE
- BF ×—×—× BF BARRIER FENCE
- SILT FENCE
- SILT FENCE WOVEN WIRE
- DISTURBED AREAS REQUIRING TEMPORARY RE-VEGETATION
- TEMPORARY EROSION MATTING
- SOIL TYPE BOUNDARY
- RIPARIAN BUFFER ZONE
- FILTER CURTAIN

SCALE 1" = 20'-0"
20 0 20

CLD CONSULTING ENGINEERS

PROJECT NAME:	STOWE
PROJECT NUMBER:	BRF 0235(15)
FILE NAME: z88cl90bdrerocn.dgn	PLOT DATE: 5/8/2015
PROJECT LEADER: J. BYATT	DRAWN BY: S. FORTIER
DESIGNED BY: S. FORTIER	CHECKED BY: K. RUTTER
EPSC CONSTRUCTION PLAN SHEET 2	SHEET 74 OF 79

CLD 12-0120 MODEL: 02

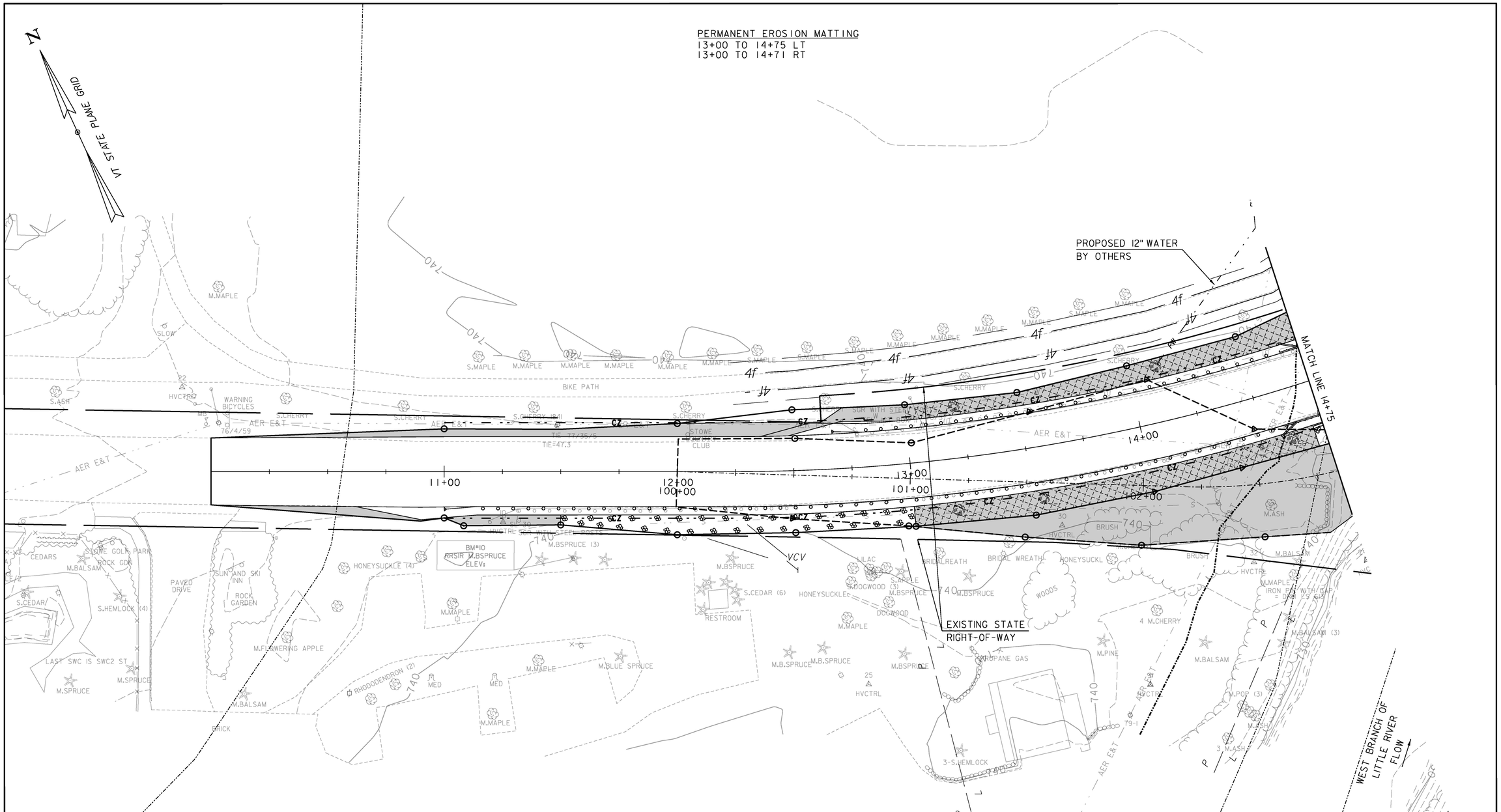

LEGEND

- SOIL TYPE BOUNDARY
- RIPARIAN BUFFER ZONE
- DISTURBED AREAS REQUIRING RE-VEGETATION
- TEMPORARY EROSION MATTING
- STONE FILL, TYPE II

NOTES:

1. SEE CROSS SECTIONS FOR FINISHED GRADING.

SCALE 1" = 20'-0"
20 0 20

CONSULTING ENGINEERS

PROJECT NAME: STOWE	
PROJECT NUMBER: BRF 0235(15)	
FILE NAME: z88c190bdrerofl.dgn	PLOT DATE: 5/8/2015
PROJECT LEADER: J. BYATT	DRAWN BY: S. FORTIER
DESIGNED BY: S. FORTIER	CHECKED BY: K. RUTTER
EPSC FINAL PLAN SHEET 1	SHEET 75 OF 79

CLD 12-0120 MODEL: 01

LEGEND

- SOIL TYPE BOUNDARY
- RIPARIAN BUFFER ZONE
- DISTURBED AREAS REQUIRING RE-VEGETATION
- TEMPORARY EROSION MATTING
- STONE FILL, TYPE II

PERMANENT EROSION MATTING
14+75 TO 15+04 LT
17+00 TO 18+50 LT

N

VT STATE PLANE GRID

VT108 STA 15+50.00 ±
CHANNEL STA 52+00.00
Δ = 50° 00' 00"
(TANGENT TO CURVE)

50' RIPARIAN BUFFER

CHANNEL STA 53+50.00

WEST BRANCH OF LITTLE RIVER

PROPOSED 12" WATER
BY OTHERS

EXISTING TOWN
RIGHT-OF-WAY

EXISTING STATE
RIGHT-OF-WAY

FISHERIES-
COLD WATER

MATCH LINE 14+75

CHANNEL LINE
N 41° 21' 18.84" E

CHANNEL
STA 50+75.00

MEADOW LANE
(TH 38)

REMOVE
18" CMP

N 64° 06' 12.06" E

N 50° 27' 12.70" E

40+77.5 RT — 40+49.3 LT
NEW 18"x22" CREPSL
W/ FES AT OUTLET
CONSTRUCT RC STRAIGHT
HW @ INLET
STONE FILL, TYPE II
AT OUTLET (3'x6')

THE GABLES INN
& RESTAURANT

SCALE 1" = 20'-0"
20 0 20

CLD CONSULTING ENGINEERS

PROJECT NAME:	STOWE
PROJECT NUMBER:	BRF 0235(15)
FILE NAME: z88cl90bdrerofl.dgn	PLOT DATE: 5/8/2015
PROJECT LEADER: J. BYATT	DRAWN BY: S. FORTIER
DESIGNED BY: S. FORTIER	CHECKED BY: K. RUTTER
EPSC FINAL PLAN SHEET 2	SHEET 76 OF 79

CLD 12-0120 MODEL: 02

VAOT RURAL AREA MIX

LBS/AC					
% WEIGHT	BROADCAST	HYDROSEED	NAME	GERM %	PURITY %
37.5%	22.5	45	CREEPING RED FESCUE	85%	98%
37.5%	22.5	45	TALL FESCUE	90%	95%
5.0%	3	6	RED TOP	90%	95%
15.0%	9	18	BIRDSFOOT TREFOIL	85%	98%
5.0%	3	6	ANNUAL RYE GRASS	85%	95%
100%	60	120			

VAOT URBAN AREA MIX

LBS/AC					
% WEIGHT	BROADCAST	HYDROSEED	NAME	GERM %	PURITY %
42.5%	34	68	CREEPING RED FESCUE	85%	98%
10.0%	8	16	PERENNIAL RYE GRASS	90%	95%
42.5%	34	68	KENTUCKY BLUE GRASS	85%	85%
5.0%	4	8	ANNUAL RYE GRASS	85%	95%
100%	80	160			

SOIL AMENDMENT GUIDANCE

FERTILIZER		LIME	
BROADCAST	HYDROSEED	BROADCAST	HYDROSEED
10-20-10	*FOLLOW*	PELLETIZED	*FOLLOW*
500 LBS/AC	*MANUFACTURER*	2 TONS/AC	*MANUFACTURER*

CONSTRUCTION GUIDANCE

1. RURAL SEED MIX: USE AS INDICATED IN THE PLANS AND/OR FOR ALL ESTABLISHED UPLAND (NON WETLAND) AREAS DISTURBED BY THE CONTRACTOR.
2. URBAN SEED MIX: USE AS INDICATED IN THE PLANS AND/OR FOR ALL ESTABLISHED LAWN AREAS DISTURBED BY THE CONTRACTOR.
3. ALL SEED MIXTURES: SHALL NOT HAVE A WEED CONTENT EXCEEDING 0.40% BY WEIGHT AND SHALL BE FREE OF ALL NOXIOUS SEED.
4. FERTILIZER AND LIMESTONE: SHALL FOLLOW RATES SHOWN ON PLAN OR AS DIRECTED BY THE ENGINEER.
5. HAY MULCH: TO BE PLACED ON EARTH SLOPES AT THE RATE OF 2 TONS/ACRE, ACHIEVE 90% GROUND COVER OR AS DIRECTED BY THE ENGINEER.
6. TOPSOIL: TO BE USED WITH SEED AS INDICATED ON THE PLANS, OR AS DIRECTED BY THE ENGINEER.
7. HYDROSEEDING: ALTHOUGH GUIDANCE IS GIVEN ABOVE THE SITE CONDITIONS AND THE TYPE OF HYDROSEED WILL ULTIMATELY DICTATE THE AMOUNTS AND TYPES OF SOIL AMENDMENTS TO BE APPLIED.
8. TURF ESTABLISHMENT: PLACING SEED, FERTILIZER, LIME AND MULCH PRIOR TO SEPTEMBER 15 AND AFTER APRIL 15 CAN BETTER ENSURE A VIGOROUS GROWTH OF GRASS.

ADAPTED FROM VTRANS TECHNICAL LANDSCAPE MANUAL FOR ROADWAYS AND TRANSPORTATION FACILITIES

TURF ESTABLISHMENT

REVISIONS	
JUNE 23, 2009	WHF
JANUARY 15, 2010	WHF
FEBRUARY 16, 2011	WHF

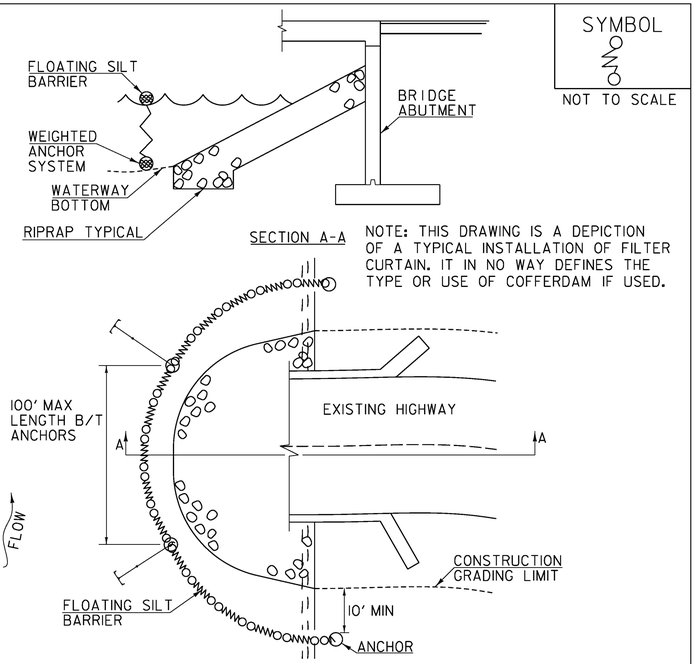

CONSTRUCTION SPECIFICATIONS

1. FILTER CURTAIN SHALL NOT BE PLACED ACROSS A FLOWING WATERWAY, OR IN A WATERWAY WITH STREAM VELOCITIES GREATER THAN 1.5 FEET/SECOND.
2. MAXIMUM 100' LENGTH BETWEEN ANCHORS.
3. LAST SECTION SHALL TERMINATE A MINIMUM OF 10' BEYOND LIMIT OF DISTURBANCE.
4. THE WEIGHTED ANCHOR SYSTEM SHALL BE A TYPE WHICH ALLOWS THE CURTAIN TO CONFORM TO THE BOTTOM OF THE WATERWAY.
5. THE CURTAIN SHALL BE REMOVED BY SLOWLY PULLING TOWARD THE SHORE MINIMIZING THE ESCAPE OF SEDIMENTS INTO WATERWAY.

FILTER CURTAIN

THIS WORK SHALL BE PERFORMED IN ACCORDANCE WITH SECTION 649 FOR GEOTEXTILE FOR FILTER CURTAIN (PAY ITEM 649.61).

REVISIONS	
APRIL 1, 2008	WHF
JANUARY 13, 2009	WHF
SEPTEMBER 4, 2009	WHF

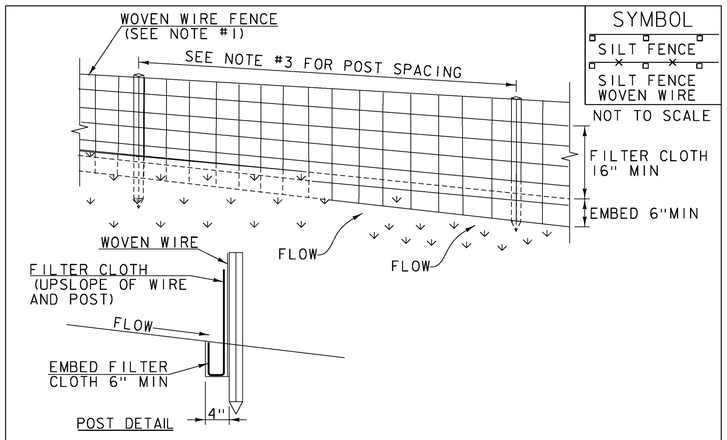

CONSTRUCTION SPECIFICATIONS

1. WOVEN WIRE REINFORCED FENCE IS REQUIRED WITHIN 100' UPSLOPE OF RECEIVING WATERS WHEN THE PROJECT FALLS UNDER A CONSTRUCTION STORMWATER PERMIT. WOVEN WIRE SHALL BE A MIN. 14 GAUGE WITH A 6" MAX. MESH OPENING.
2. FILTER CLOTH SHALL BE EITHER FILTER X, MIRAFI100X, STABILINKA T140N OR APPROVED EQUIVALENT.
3. POST SPACING FOR WIRE-BACKED FENCE SHALL BE 10' MAXIMUM. FOR FILTER-CLOTH FENCE, WHEN ELONGATION IS >50%, POST SPACING SHALL NOT EXCEED 4' AND WHEN ELONGATION IS <50%, POST SPACING SHALL NOT EXCEED 6'.
4. WOVEN WIRE FENCE IS TO BE FASTENED SECURELY TO FENCE POSTS WITH WIRE TIES. FILTER CLOTH IS TO BE FASTENED SECURELY TO WOVEN WIRE FENCE WITH TIES SPACED EVERY 24" AT TOP AND MID SECTION.
5. WHEN TWO SECTIONS OF FILTER CLOTH ADJOIN EACH OTHER THEY SHALL BE OVER-LAPPED BY 6" AND FOLDED.
6. MAINTENANCE SHALL BE PERFORMED AS NEEDED AND MATERIAL REMOVED WHEN SEDIMENT REACHES HALF OF FABRIC HEIGHT.

ADAPTED FROM DETAILS PROVIDED BY: NEW YORK STATE DEC ORIGINALLY DEVELOPED BY USDA-NRCS VERMONT DEPARTMENT OF ENVIRONMENTAL CONSERVATION

SILT FENCE

NOTES:
REFER TO "THE VERMONT STANDARDS & SPECIFICATIONS FOR EROSION PREVENTION & SEDIMENT CONTROL -2006- "FROM THE VT AGENCY OF NATURAL RESOURCES FOR ADDITIONAL GUIDANCE.

THIS WORK SHALL BE PERFORMED IN ACCORDANCE WITH SECTION 649 AND AS SHOWN IN THE PLANS FOR GEOTEXTILE FOR SILT FENCE (PAY ITEM 649.51) OR GEOTEXTILE FOR SILT FENCE, WOVEN WIRE REINFORCED (PAY ITEM 649.515).

REVISIONS	
MARCH 21, 2008	WHF
DECEMBER 11, 2008	WHF
JANUARY 13, 2009	WHF

CLD 12-0120 MODEL: 02

CLD CONSULTING ENGINEERS

PROJECT NAME: STOWE
PROJECT NUMBER: BRF 0235(15)

FILE NAME: z88cl90erodet.dgn
PROJECT LEADER: J. BYATT
DESIGNED BY: S. FORTIER
EPSC DETAILS 1

PLOT DATE: 5/8/2015
DRAWN BY: S. FORTIER
CHECKED BY: K. RUTTER
SHEET 77 OF 79

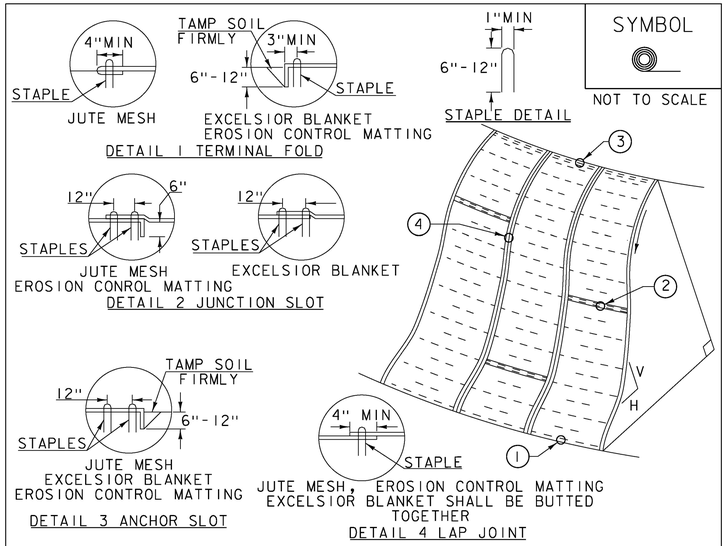

SYMBOL

NOT TO SCALE

CONSTRUCTION SPECIFICATIONS

1. APPLY TO SLOPES GREATER THAN 3H:1V OR WHERE NECESSARY TO AID IN ESTABLISHING VEGETATION.
2. APPLY FERTILIZER, LIME AND SEED PRIOR TO PLACING MATTING.
3. STAPLES ARE TO BE PLACED ALTERNATELY, IN COLUMNS APPROXIMATELY 2' APART AND IN ROWS APPROXIMATELY 3' APART. APPROXIMATELY 175 STAPLES ARE REQUIRED PER 4'X225' ROLL OF MATERIAL AND 125 STAPLES ARE REQUIRED PER 4'X150' ROLL OF MATERIAL.
4. DISTURBED AREAS SHALL BE SMOOTHLY GRADED. EROSION CONTROL MATERIAL SHALL BE PLACED LOOSELY OVER GROUND SURFACE. DO NOT STRETCH.
5. ALL TERMINAL ENDS AND TRANSVERSE LAPS SHALL BE STAPLED AT APPROXIMATELY 12" INTERVALS.

ADAPTED FROM DETAILS PROVIDED BY: NEW YORK STATE DEC
ORIGINALLY DEVELOPED BY USDA-NRCS
VERMONT DEPARTMENT OF ENVIRONMENTAL CONSERVATION

ROLLED EROSION CONTROL PRODUCT (RECP) SIDE SLOPE

NOTES:
REFER TO "THE VERMONT STANDARDS & SPECIFICATIONS FOR EROSION PREVENTION & SEDIMENT CONTROL -2006- " FROM THE VT AGENCY OF NATURAL RESOURCES FOR ADDITIONAL GUIDANCE.
THIS WORK SHALL BE PERFORMED IN ACCORDANCE WITH SECTION 653 AND AS SHOWN IN THE PLANS FOR TEMPORARY EROSION MATTING (PAY ITEM 653.20) OR PERMANENT EROSION MATTING (PAY ITEM 653.21).

REVISIONS	
APRIL 16, 2007	JMF
JANUARY 13, 2009	WHF

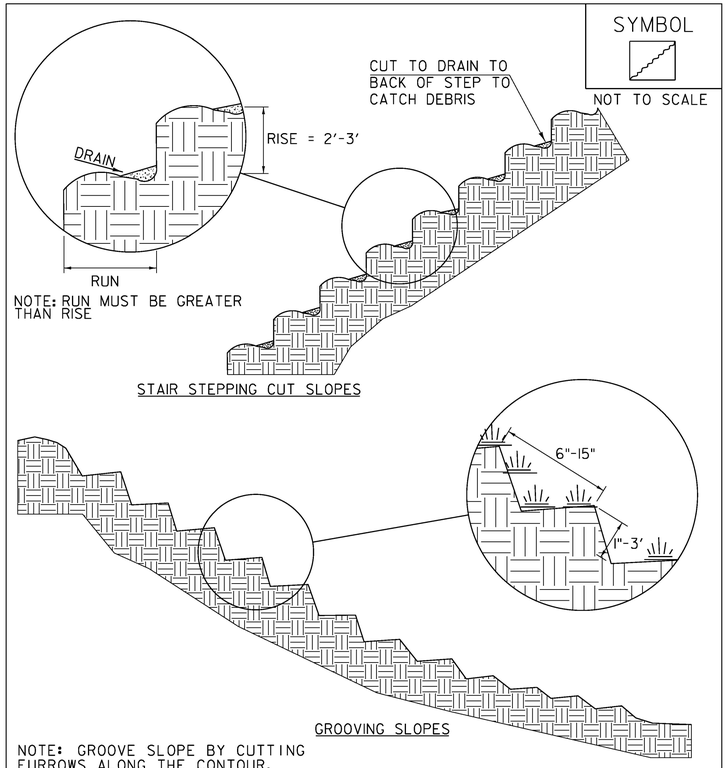

SYMBOL

NOT TO SCALE

NOTE: RUN MUST BE GREATER THAN RISE

STAIR STEPPING CUT SLOPES

GROOVING SLOPES

NOTE: GROOVE SLOPE BY CUTTING FURROWS ALONG THE CONTOUR. IRREGULARITIES IN THE SOIL SURFACE CATCH RAINWATER AND RETAIN LIME, FERTILIZER AND SEED.

ADAPTED FROM DETAILS PROVIDED BY: NEW YORK STATE DEC
ORIGINALLY DEVELOPED BY USDA-NRCS
VERMONT DEPARTMENT OF ENVIRONMENTAL CONSERVATION

SURFACE ROUGHENING

NOTES:
REFER TO "THE VERMONT STANDARDS & SPECIFICATIONS FOR EROSION PREVENTION & SEDIMENT CONTROL -2006- " FROM THE VT AGENCY OF NATURAL RESOURCES FOR ADDITIONAL GUIDANCE.

THIS WORK SHALL BE CONSIDERED INCIDENTAL TO THE CONTRACT

REVISIONS	
APRIL 1, 2008	WHF
JANUARY 13, 2009	WHF

CLD 12-0120 MODEL: 03

CONSULTING ENGINEERS

PROJECT NAME:	STOWE
PROJECT NUMBER:	BRF 0235(15)
FILE NAME: z88cl90erodet.dgn	PLOT DATE: 5/8/2015
PROJECT LEADER: J. BYATT	DRAWN BY: S. FORTIER
DESIGNED BY: S. FORTIER	CHECKED BY: K. RUTTER
EPSC DETAILS 2	SHEET 78 OF 79

Town of Stowe
Gables Bridge Water Main Relocation
Plan View

DETAIL "B"

STA 0+00 - 1+70
PROPOSED 12' DUCTILE
IRON WATER MAIN

STA 1+70 - 4+80
PROPOSED 14" HDPE WATER MAIN
DIRECTIONALLY DRILLED/INSTALLED

DETAIL "C"

DETAIL "A"

VERIFY SEWER INVERT

12" GATE VALVE
STA. 104+39

12"x6" TEE w/HYD.
STA. 101+25

12"-45°
STA. 100+99

12"-45°
STA. 100+38

24"ø STEEL CASING
STA. 100+40 TO STA. 100+97

CASING
TO 105+01

BRIDGE #3

CORE BRIDGE ABUTMENT (TYP.)

12"-45°
STA. 104+47, LIMITS
OF BRIDGE CROSSING

12"-22½°
STA. 102+76, LIMITS
OF BRIDGE CROSSING

12" GATE VALVE
STA. 102+56

DETAIL "D"

ROUTE 108

MOUNTAIN ROAD

WEST BRANCH LITTLE RIVER

MATCH TO

THE GABLES INN

PLAN
SCALE: 1" = 40'

STOWE
BRF 0235(15)
SHEET 79 OF 79
FOR REFERENCE ONLY

TOWN OF STOWE
DEPARTMENT OF PUBLIC WORKS
PO BOX 730
67 MAIN STREET
STOWE, VT 05672

PROJECT Gables Bridge Water Main Relocation
SHEET NO. 2 OF 3
CALCULATED BY RLG DATE 12/06/2013
CHECKED BY DATE
SCALE 1" = 40' PROJECT NO. 12013.01

CLD 12-0120 MODEL: Reference

CONCRETE GENERAL NOTES

1. ALL EXPOSED EDGES OF CONCRETE SHALL BE CHAMFERED 1" x 1"
2. REINFORCING STEEL SIZE AND SPACING SHOWN IN THE PLANS IS BASED ON 60 KSI STEEL, UNLESS NOTED OTHERWISE. WITH THE ENGINEER'S PERMISSION, BAR SIZE AND SPACING MAY BE MODIFIED ACCORDING TO THE LATEST AASHTO LRFD BRIDGE DESIGN SPECIFICATION AND STRUCTURES DESIGN MANUAL WHEN USING HIGHER STRENGTH STEEL.

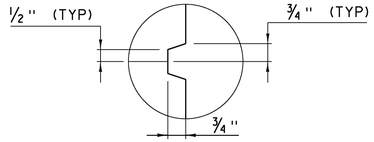

SCORE MARK DETAIL
(NOT TO SCALE)

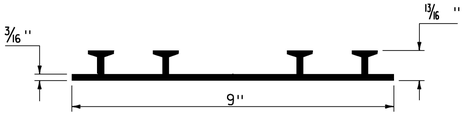

P.V.C. WATERSTOP FOR CONSTRUCTION JOINTS
(NOT TO SCALE)

PAYMENT FOR THE P.V.C. WATERSTOP SHALL BE INCIDENTAL TO THE UNIT BID PRICE FOR THE ADJACENT CONCRETE.

OTHER CONFIGURATIONS OF WATERSTOP MAY BE USED UPON APPROVAL OF THE ENGINEER.

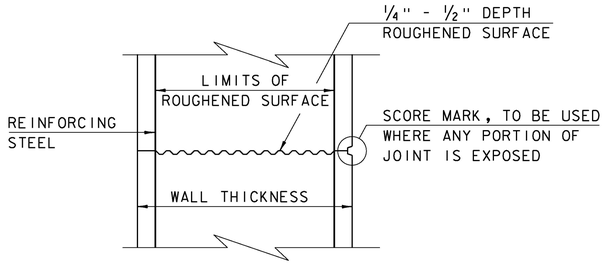

TYPICAL HORIZONTAL CONSTRUCTION JOINT
(NOT TO SCALE)

1. THE SURFACE OF THE CONCRETE CONSTRUCTION JOINTS SHALL BE CLEANED AND FREE OF LAITANCE.
2. IMMEDIATELY BEFORE NEW CONCRETE IS PLACED, ALL CONSTRUCTION JOINTS SHALL BE WETTED AND STANDING WATER REMOVED.

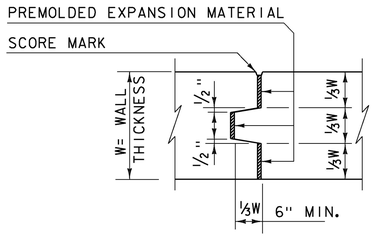

TYPICAL CONCRETE EXPANSION JOINT
(NOT TO SCALE)

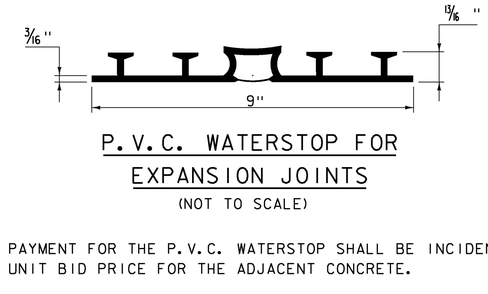

P.V.C. WATERSTOP FOR EXPANSION JOINTS
(NOT TO SCALE)

PAYMENT FOR THE P.V.C. WATERSTOP SHALL BE INCIDENTAL TO THE UNIT BID PRICE FOR THE ADJACENT CONCRETE.

OTHER CONFIGURATIONS OF WATERSTOP MAY BE USED UPON APPROVAL OF THE ENGINEER.

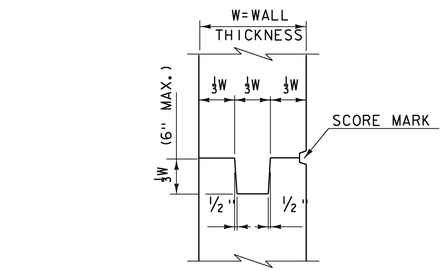

TYPICAL CONCRETE CONSTRUCTION JOINT
(NOT TO SCALE)

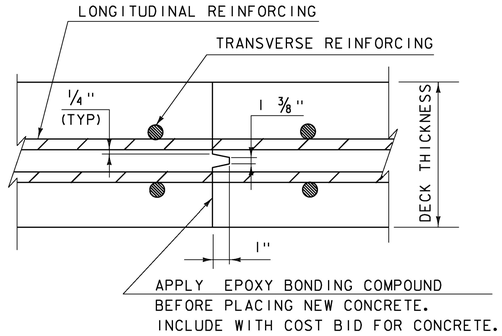

TRANSVERSE BRIDGE SLAB CONSTRUCTION JOINT DETAILS
(NOT TO SCALE)

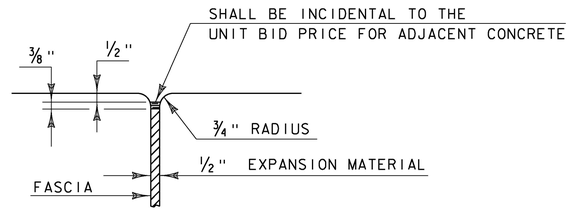

JOINT BETWEEN FASCIA AND WINGWALL
(NOT TO SCALE)

REVISIONS	
MAY 7, 2010	APPROVED FOR USE BY VAOT STRUCTURES SECTION
FEBRUARY 9, 2012	REBAR SUBSTITUTION ALLOWANCE ADDED TO CONCRETE GENERAL NOTES.

CONCRETE DETAILS AND NOTES

VERMONT AGENCY OF TRANSPORTATION
STRUCTURES - SECTION

STRUCTURES DETAIL
SD-501.00

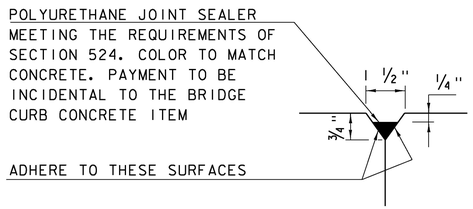

DETAIL "B"
(NOT TO SCALE)

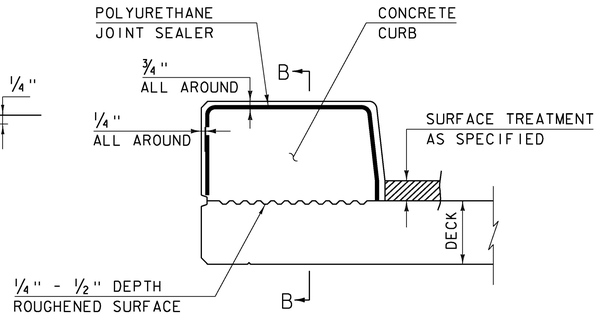

CONCRETE CURB JOINT SECTION
(NOT TO SCALE)

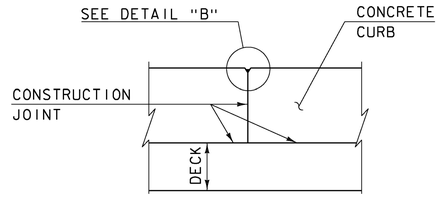

SECTION B - B
(NOT TO SCALE)

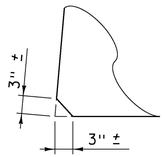

ACUTE ANGLE CLIP DETAIL
(NOT TO SCALE)

1. SEE TYPICAL HORIZONTAL CONSTRUCTION JOINT DETAIL FOR ADDITIONAL INFORMATION

CONCRETE CURB JOINT NOTES

1. CONCRETE CURBS MAY BE PLACED IN ONE CONTINUOUS OPERATION IF AN APPROVED SHRINKAGE REDUCING ADMIXTURE LISTED IN THE SPECIAL PROVISIONS IS USED WITH THE CONCRETE MIX DESIGN. PAYMENT FOR THE SHRINKAGE REDUCING ADMIXTURE WILL BE INCIDENTAL TO THE BRIDGE CURB CONCRETE ITEM.

2. IF THE CONTRACTOR CHOOSES NOT TO USE AN APPROVED SHRINKAGE REDUCING ADMIXTURE, THE CURBS SHALL BE CONSTRUCTED WITH CONSTRUCTION JOINTS SPACED AT A MAXIMUM OF 15'-0" CENTER TO CENTER AND 2'-0" MINIMUM FROM THE CENTER OF NEAREST BRIDGE RAILING POST.

3. ON MULTI-SPAN CONTINUOUS SUPERSTRUCTURES, REGARDLESS OF WHETHER APPROVED SHRINKAGE REDUCING ADMIXTURE IS USED, CURB JOINTS SHALL BE LOCATED OVER THE CENTERLINE OF PIERS AND 7'-0" EACH SIDE OF THE CENTERLINE OF EACH PIER.

4. WHEN CURB JOINTS ARE USED THE CURBS SHALL BE PLACED IN ALTERNATE SECTIONS WITH A MINIMUM OF 48 HOUR DELAY BETWEEN ADJACENT PLACEMENTS.

5. LONGITUDINAL REINFORCING SHALL BE CONTINUOUS THROUGH CURB CONSTRUCTION JOINTS. CURB STIRRUP BARS SHALL BE TURNED AS NECESSARY TO MAINTAIN COVER IN THE FLARED CURB ENDS.

6. THE JOINT SPACING AND DETAILS SHOWN SHALL APPLY TO SIDEWALKS WHEN SHOWN IN THE PLANS.

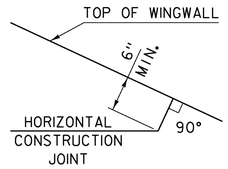

HORIZONTAL WINGWALL CONSTRUCTION JOINT
(NOT TO SCALE)

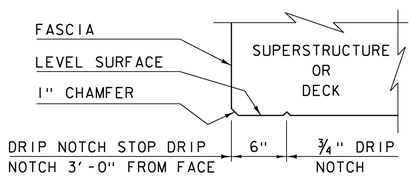

DRIP NOTCH DETAIL
(NOT TO SCALE)

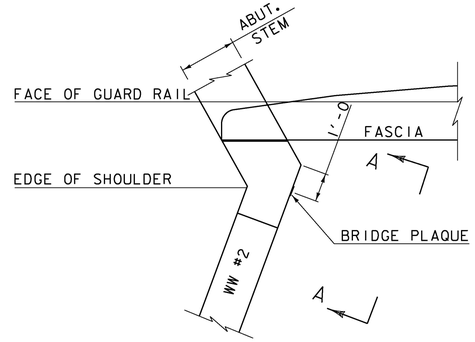

PLAN

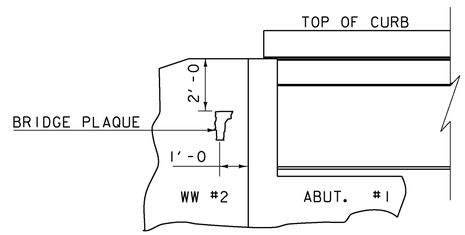

VIEW "A - A"

BRIDGE PLAQUE
(NOT TO SCALE)

THE BRIDGE PLAQUE WILL BE SUPPLIED BY THE AGENCY OF TRANSPORTATION AND SHALL BE INSTALLED BY THE CONTRACTOR AT ABUTMENT #1 ON THE RIGHT SIDE AS SHOWN OR AS DIRECTED BY THE ENGINEER.

PAYMENT FOR INSTALLATION OF THE BRIDGE PLAQUE SHALL BE INCIDENTAL TO THE ADJACENT CONCRETE.

REVISIONS	
MAY 7, 2010	APPROVED FOR USE BY VAOT STRUCTURES SECTION
JUNE 4, 2010	MODIFIED AND ADDED TWO DETAILS
OCTOBER 10, 2012	MODIFIED HORZ. JOINT WINGWALL ADD 6" MIN. DIMENSION

CONCRETE DETAILS AND NOTES

VERMONT AGENCY OF TRANSPORTATION
STRUCTURES - SECTION

STRUCTURES DETAIL
SD-502.00

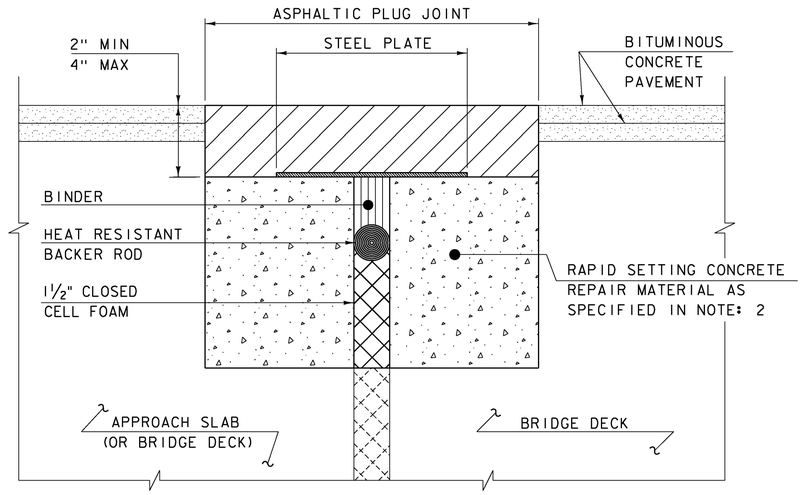

ASPHALTIC PLUG JOINT DETAIL - REHAB

NOTES:

1. THE CONTRACTOR SHALL REMOVE ALL ASPHALTIC PLUG JOINT MATERIAL AND DETERIORATED CONCRETE AS DIRECTED BY THE ENGINEER. REMOVAL OF THE FIRST 4 INCHES OF MATERIAL SHALL BE INCLUDED IN THE BID PRICE FOR ITEM 516.10 BRIDGE EXPANSION JOINT, ASPHALTIC PLUG. ANY REMOVAL OF MATERIAL GREATER THAN 4 INCHES SHALL BE INCLUDED IN THE BID PRICE OF ITEM 580.20 RAPID SETTING CONCRETE REPAIR MATERIAL WITH COARSE AGGREGATE.

2. THE CONTRACTOR SHALL REPLACE REMOVED MATERIAL THAT IS LESS THAN 4" FROM FINISHED GRADE WITH ASPHALTIC PLUG JOINT MATERIAL MEETING THE REQUIREMENTS OF SUBSECTION 707.15. ALL REMOVED MATERIAL THAT IS GREATER THAN 4 INCHES FROM FINISHED GRADE SHALL BE REPLACED WITH RAPID SETTING CONCRETE REPAIR MATERIAL WITH COARSE AGGREGATE MEETING THE REQUIREMENTS OF SUBSECTION 780.04.

3. REINFORCING STEEL NOT SHOWN FOR CLARITY.

4. PLACE 1/4" THICK BY 8" WIDE SECTIONS OF STEEL PLATE OVER THE CENTER OF THE MOVEMENT GAP. SECURE THE PLATES FROM MOVING BY INSERTING LOCATING PINS THROUGH THE PRE-STAMPED HOLES INTO BACKER ROD AND COVER WITH HOT BINDER. THE STEEL PLATES MAY BE OMITTED WHERE THE ENGINEER DETERMINES THAT THE APPROACH SLAB OR BRIDGE DECK WILL PROVIDE INADEQUATE SUPPORT AND WHERE VERTICAL MOVEMENT OF THE PLATES MIGHT OCCUR.

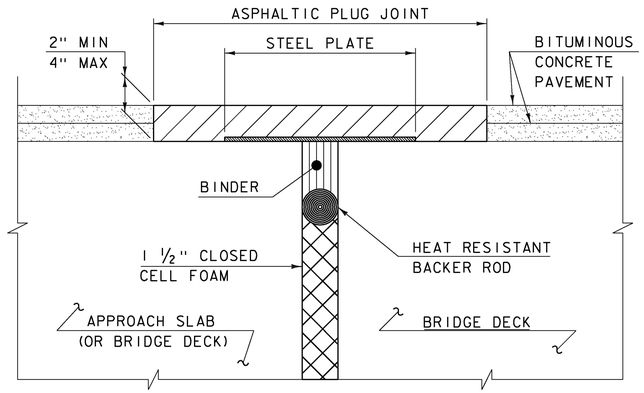

ASPHALTIC PLUG JOINT DETAIL "A" - NEW

NOTE:
PLACE 1/4" THICK BY 8" WIDE SECTIONS OF STEEL PLATE OVER THE CENTER OF THE MOVEMENT GAP. SECURE THE PLATES FROM MOVING BY INSERTING LOCATING PINS THROUGH THE PRE-STAMPED HOLES INTO BACKER ROD AND COVER WITH HOT BINDER.

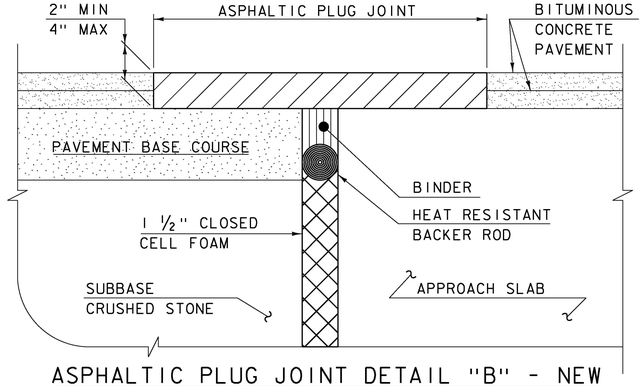

ASPHALTIC PLUG JOINT DETAIL "B" - NEW

ASPHALTIC PLUG JOINT NOTES

INSTALLATION:

1. LOCATE THE JOINT CENTRALLY OVER THE DECK OVERLAY EXPANSION GAP OR FIXED JOINT, MARKED OUT TO THE MANUFACTURER'S RECOMMENDED WIDTH.
2. REMOVE THE BITUMINOUS CONCRETE PAVEMENT FULL DEPTH AS SHOWN ON THE PLANS. THE PAVEMENT SHALL BE DRY AND SAW CUT TO THE LIMITS REQUIRED TO PLACE THE JOINT. A PNEUMATIC HAMMER AND CHISEL MAY BE USED ADJACENT TO THE CURB ONLY WHEN SAW CUTTING IS NOT POSSIBLE.
3. BLAST CLEAN THE JOINT AREA OF DEBRIS, ASPHALT AND SHEET MEMBRANE. THOROUGHLY DRY THE JOINT AREA WITH COMPRESSED AIR PRIOR TO APPLYING BINDER MATERIAL.
4. PLACE PROPERLY SIZED HEAT RESISTANT BACKER ROD IN THE MOVEMENT GAP ALLOWING FOR 1" +/- OF BINDER ABOVE THE ROD.
5. HEAT AND PLACE THE BINDER MATERIAL AS RECOMMENDED BY THE MANUFACTURER.
6. IMMEDIATELY AFTER TOP COATING, CAST AN ANTI-SKID MATERIAL OVER THE JOINT TO REDUCE THE RISK OF TRACKING.

WEATHER LIMITATIONS

APPLY BINDER MATERIAL ONLY WHEN THE FOLLOWING CONDITIONS PREVAIL OR AS RECOMMENDED BY THE MANUFACTURER:

1. THE AMBIENT AIR TEMPERATURE IS AT LEAST 10 DEG C (50 DEG F) AND RISING.
2. THE ROAD SURFACE IS DRY.
3. WEATHER CONDITIONS OR OTHER CONDITIONS ARE FAVORABLE AND ARE EXPECTED TO REMAIN SO FOR THE PERFORMANCE OF SATISFACTORY WORK.

DETAILS ON THIS SHEET ARE NOT TO SCALE.

REVISIONS	
MAY 7, 2010	APPROVED FOR USE BY VAOT STRUCTURES SECTION
AUGUST 29, 2011	ADD DETAIL "B" AND REV. NOTES

BRIDGE JOINT
ASPHALTIC PLUG

VERMONT AGENCY OF TRANSPORTATION
STRUCTURES - DIVISION

STRUCTURES DETAIL
SD-516.10

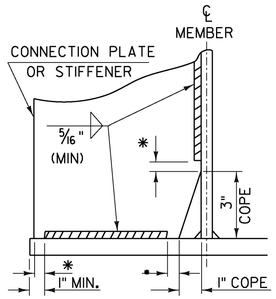

WELD TERMINATION AND COPING DETAILS FOR STEEL MEMBERS

*NO WELD FOR 3/8" MIN. 7/8" MAX. (EXCEPT MUST MAINTAIN 1" MINIMUM FROM EDGE OF FLANGE)

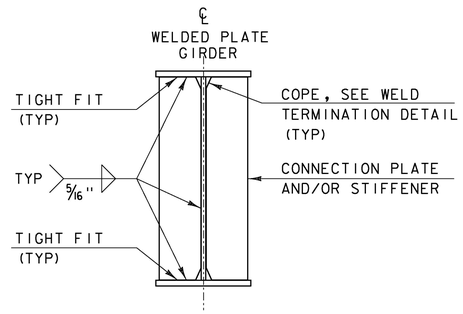

INTERMEDIATE CONNECTION PLATES AND/OR STIFFENERS FOR WELDED PLATE GIRDERS

INTERMEDIATE DETAIL IS ONLY USED WHEN PLATE DOES NOT OCCUR AT AN ABUTMENT OR PIER.

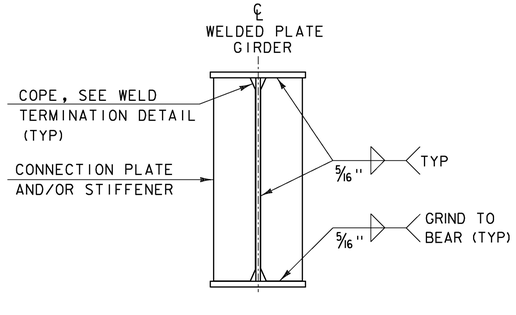

ABUTMENT BEARING STIFFENERS AND/OR CONNECTION PLATES FOR WELDED PLATE GIRDERS

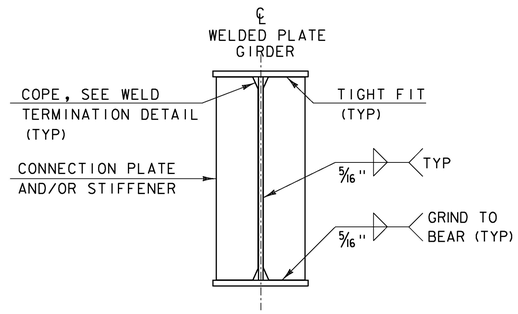

PIER BEARING STIFFENERS AND/OR CONNECTION PLATES FOR WELDED PLATE GIRDERS

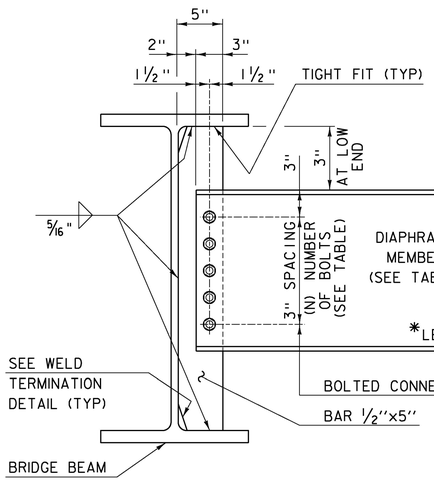

DEPTH		DIAPHRAGM MEMBER	(N) BOLTS
ROLLED BEAM	24" 30"	C15x33.9	4
	31" 36"	MC18x42.7	5
	37" 42"	W21x44	6
PLATE GIRDER WEB	31" 36"	W27x84	7
	37" 42"	W33x118	9
	43" 48"	W36x135	10

INTERMEDIATE DIAPHRAGMS FOR 24" TO 48" BRIDGE BEAMS

*IF CLEARANCE CANNOT BE MET, DIAPHRAGM MAY BE SLOPED.

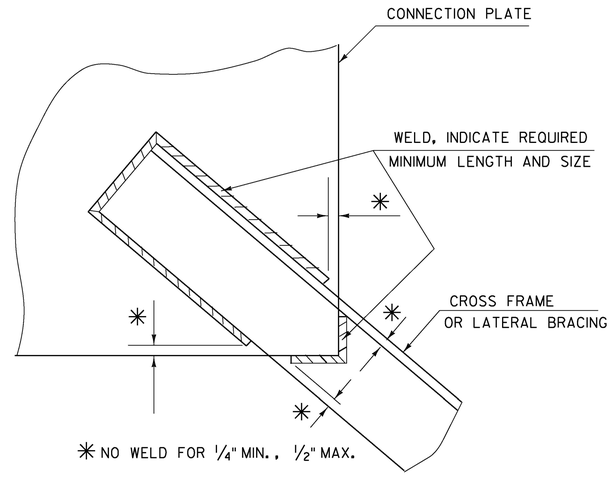

WELD LOCATION DETAIL AT CROSS FRAMES AND LATERAL BRACING

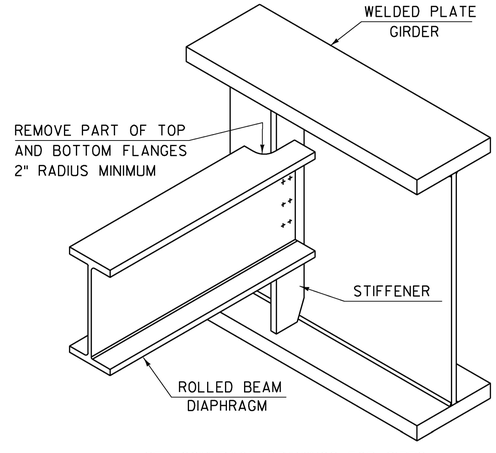

SEE CONTRACT DRAWINGS FOR SIZES OF MEMBERS AND CONNECTION DETAILS

ROLLED BEAM USED AS DIAPHRAGM

DETAILS ON THIS SHEET ARE "NOT TO SCALE" UNLESS NOTED OTHERWISE.

REVISIONS	
MAY 7, 2010	APPROVED FOR USE BY VAOT STRUCTURES SECTION
MAY 2, 2011	ADD INTERMEDIATE DIAPHRAGMS DETAIL & ADD NOT TO SCALE NOTE

STRUCTURAL STEEL PLATE GIRDER DETAILS AND NOTES

VERMONT AGENCY OF TRANSPORTATION
STRUCTURES - SECTION

STRUCTURES DETAIL
SD-602.00

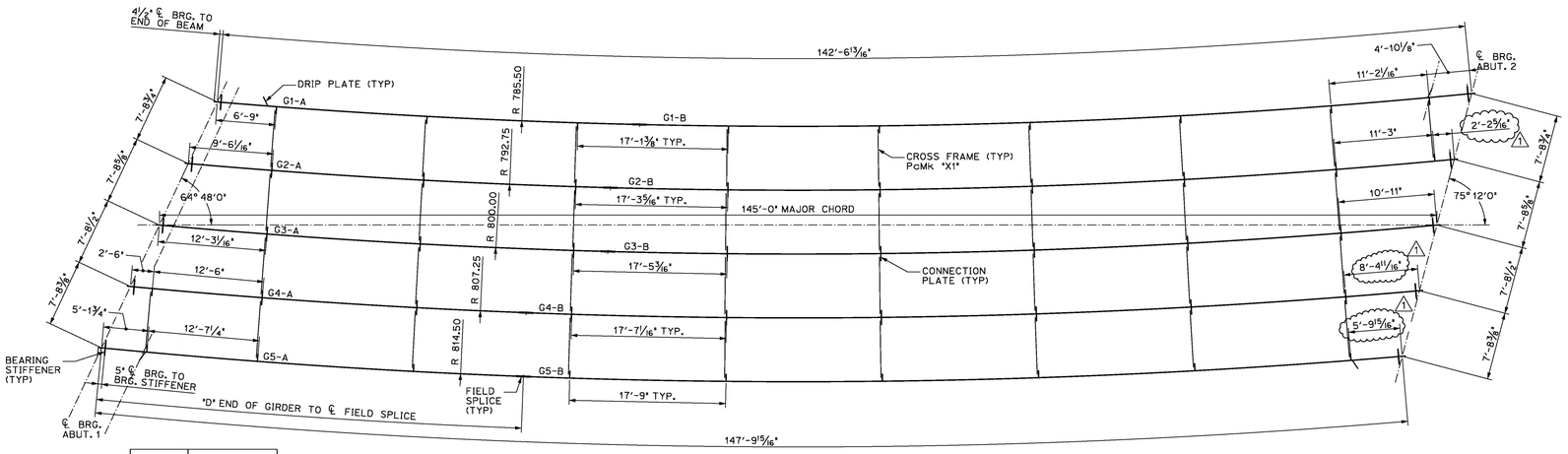

GIRDER	"D" DIMENSION
G1	48'-0"
G2	48'-0"
G3	51'-0"
G4	45'-0"
G5	48'-0"

FRAMING PLAN
SCALE: ⅛" = 1'-0"

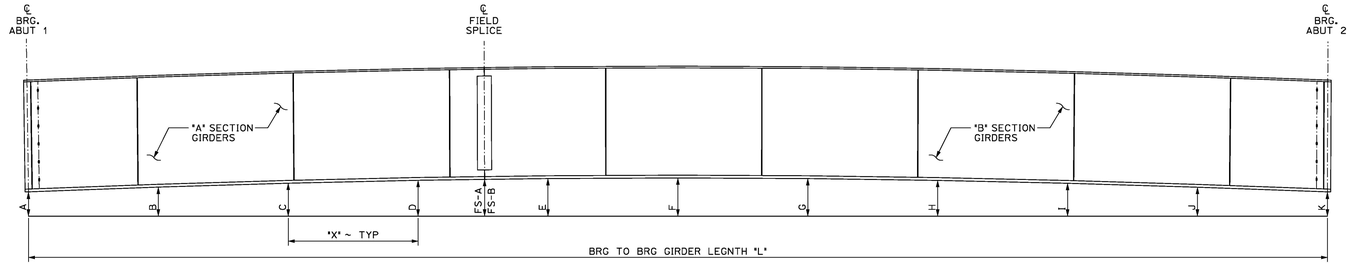

BLOCKING DIAGRAM ~ SEE CHART
NTS
ALL DIMENSIONS ARE TO THE OUTSIDE OF BOTTOM FLANGES

	BRG TO BRG GIRDER LENGTH "L"	10 SPACES AT "X"	ABUT 1 ℄ BRG. "A"	0.10L "B"	0.20L "C"	0.30L "D"	FIELD SPLICE FS-A	FIELD SPLICE FS-B	0.40L "E"	0.50L "F"	0.60L "G"	0.70L "H"	0.80L "I"	0.90L "J"	ABUT 2 ℄ BRG. "K"
GIRDER 1	142'-6 13/16"	14'-3/16"	6"	8⅝"	11"	1'-0⅜"	1'-0¾"	1'-0¾"	1'-1⅜"	1'-1 1/16"	1'-1⅜"	1'-0⅜"	11"	8⅝"	6"
GIRDER 2	143'-10 9/16"	14'-4 1/16"*	6"	8⅞"	11½"	1'-1"	1'-1⅝"	1'-1⅝"	1'-2"	1'-2⅛"	1'-2"	1'-1"	11½"	8⅞"	6"
GIRDER 3	145'-2⅜"	14'-6¼"*	6"	9⅜"	11 13/16"	1'-1¾"	1'-2⅜"	1'-2⅜"	1'-2 5/16"	1'-3⅝"	1'-2 5/16"	1'-1¾"	11 13/16"	9⅜"	6"
GIRDER 4	146'-6⅛"	14'-7 13/16"*	6"	9⅞"	1'=0 5/16"	1'-2 7/16"	1'-2½"	1'-2⅝"	1'-3¾"	1'-4¼"	1'-3¾"	1'-2⅝"	1'=0 5/16"	9⅞"	6"
GIRDER 5	147'-9 15/16"	14'-9 7/16"*	6"	9¾"	1'-0⅞"	1'-3¼"	1'-3⅝"	1'-3⅝"	1'-4¾"	1'-5¼"	1'-4¾"	1'-3¼"	1'-0⅞"	9¾"	6"

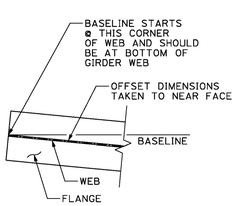

BASELINE DETAIL
N.T.S.

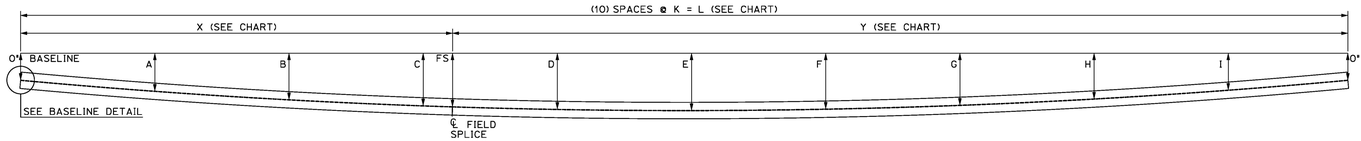

ASSEMBLED GIRDER SWEEP DETAIL
SCALE: ⅛" = 1'-0"

SWEEP DIMENSIONS														
GIRDER	K	L	X	Y	A	B	C	FS	D	E	F	G	H	I
G1	14'-3¾"*	143'-1⅝"	48'-3⅜"	94'-9¾"	1'-2⅛"	2'-1 1/16"	2'-8 15/16"	2'-11 1/16"	3'-1⅝"	3'-3⅜"	3'-1⅝"	2'-8 15/16"	2'-1⅛"	1'-2⅛"
G2	14'-5⅝"*	144'-5⅛"	48'-3⅜"	96'-1 11/16"	1'-2¼"	2'-1⅝"	2'-9¼"	2'-11 1/16"	3'-2"	3'-3⅜"	3'-2"	2'-9¼"	2'-1⅝"	1'-2¼"
G3	14'-6⅞"*	145'-8 15/16"	51'-3⅝"	94'-5⅝"	1'-2⅜"	2'-1⅜"	2'-9⅜"	3'-0 1/16"	3'-2⅝"	3'-3 15/16"	3'-2⅝"	2'-9⅜"	2'-1⅜"	1'-2⅜"
G4	14'-8⅞"*	147'-0⅝"	45'-3⅜"	101'-9⅞"	1'-2½"	2'-1 3/16"	2'-9⅝"	2'-10 5/16"	3'-2 11/16"	3'-4¼"	3'-2 11/16"	2'-9⅞"	2'-1 3/16"	1'-2⅝"
G5	14'-10"*	148'-4⅜"	48'-3 1/16"	100'-1 5/16"	1'-2⅝"	2'-2"	2'-10⅛"	2'-11 1/16"	3'-3"	3'-4⅝"	3'-3"	2'-10⅛"	2'-2 1/16"	1'-2 11/16"

GENERAL FABRICATION NOTES

MATERIAL SPECIFICATIONS

1.) ALL MATERIAL SHALL BE AASHTO M270 GRADE 50W (UNO)

2.) ALL M270 GRADE 50 MATERIAL DENOTED "CVN" SHALL MEET THE CHARPY V-NOTCH TESTING REQUIREMENTS OF ZONE 2, H FREQUENCY: 15 FT-LB AT 40° (UP TO 2" WELDED)

ITEMS SHALL CALL OUT "CVN" FOR EACH APPLICABLE ITEM IN THE BILL OF MATERIALS

3.) BOLTS SHALL BE HIGH STRENGTH BOLTS ASTM A325, TYPE 3
NUTS SHALL BE A563 GRADE C3 OR DH3
WASHERS SHALL BE ASTM F436, TYPE 3

BOLTS AND NUTS SHALL BE ROTATIONAL CAPACITY TESTED. DO NOT MIX NUTS AND BOLTS FROM DIFFERENT CONTAINERS UNLESS ALL NUTS AND BOLTS HAVE THE SAME LOT NUMBER.

FABRICATION

1.) DIE STAMPING IS ALLOWED IN SPECIFIC LOCATIONS WITH THE APPROVAL OF THE ENGINEER.

2.) ALL EDGES OF FLAME CUT MATERIAL SUBJECTED TO CALCULATED STRESSES SHALL BE ROUNDED TO A MINIMUM RADIUS OF 1/16" per STANDARD SPEC. 506.12(d)

3.) ALL PLATES, FLAME CUT FROM LARGER PLATES, SHALL BE CUT SO THAT THE PRIMARY DIRECTION OF ROLLING IS PARALLEL TO THE MAIN TENSILE OR COMPRESSIVE STRESS per STANDARD 506.08 of 2011 SPECIFICATIONS.

4.) FLANGE PLATE MATERIAL SHALL HAVE AN EDGE HARDNESS NOT GREATER THAN HRc 30, ALLOWED per STANDARD SPEC. 506.09.

WELDING

1.) ALL WELDING PROCEDURES SHALL BE IN ACCORDANCE WITH THE PROVISIONS OF SUBSECTION 506.10.

2.) NON DESTRUCTIVE TESTING OF WELDS SHALL BE IN ACCORDANCE WITH ANSI/AASHTO/AWS D1.5 ~ SECTION 6. FLANGE WELDS WILL BE CALLED OUT AS BEING IN EITHER COMPRESSION OR TENSION. WEB WELDS WILL LABEL EITHER TOP OR BOTTOM AS BEING IN COMPRESSION, OR BE LABELED AS BEING IN A STRESS REVERSAL AREA.

FLANGE SPLICES SHALL BE TESTED AS FOLLOWS:
FLANGE SPLICES IN TENSION ~ TESTED 100%
FLANGE SPLICES IN STRESS REVERSAL AREAS ~ TESTED 100%
FLANGE SPLICES IN COMPRESSION ~ TESTED 25%

WEB SPLICES SHALL BE TESTED AS FOLLOWS:
FOR 1/6 THE DEPTH OF THE WEB (TENSION AREA) ~ TESTED 100%
FOR THE REMAINING DEPTH OF WEB (COMPRESSION AREA) ~ TESTED 25 %

FOR 1/6 DEPTH OF THE WEB @ TOP & BTM. (STRESS REVERSAL) ~ TESTED 100%
THE REMAINING 2/3 OF THE WEB ~ TESTED 25%

3.) TERMINATE STIFFENER WELDS AS SHOWN IN THE "WELD TERMINATION DETAILS" ON SHEETS M2 & M3

FIELD CONNECTIONS

1.) FIELD BOLTS SHALL HAVE A HEAVY HEX NUT, HEX HEAD, AND ONE HARDENED WASHER EACH.

2.) PIECE MARKS WILL BE LOCATED AS SHOWN ON ERECTION DRAWINGS. ALL ERECTION MARKS, MATCH MARKS, AND WEIGHT MARKS MUST NOT BE EXPOSED IN THE FINISHED STRUCTURE.

3.) HARDENED WASHERS ARE REQUIRED OVER OVERSIZED HOLES.

CLEANING AND PAINTING

1.) UNPAINTED STEEL SHALL BE BLAST CLEANED TO SSPC SP-6 TO ACHIEVE A UNIFORM WEATHERED APPEARANCE.

SHOP DRAWING REVIEW

[X] REVIEWED AS REQUIRED BY THE CONSTRUCTION CONTRACT DOCUMENTS AND APPROVED, BUT ONLY FOR CONFORMANCE TO THE DESIGN CONCEPT OF THE WORK, AND SUBJECT TO FURTHER LIMITATIONS AND REQUIREMENTS CONTAINED IN THE CONSTRUCTION CONTRACT DOCUMENTS.

[ ] REJECTED [ ] REVISE AND RESUBMIT [ ] APPROVED AS NOTED

CORRECTIONS OR COMMENTS MADE ON THE SHOP DRAWINGS DURING THIS REVIEW DID NOT RELIEVE CONTRACTOR FROM COMPLIANCEWITH REQUIREMENTS OF THE DRAWINGS AND SPECIFICATIONS. THIS CHECK IS ONLY FOR REVIEW OF GENERAL CONFORMANCE WITH THE DESIGN CONCEPT OF THE PROJECT AND GENERAL COMPLIANCE WITH THE INFORMATION GIVEN IN THE CONTRACT DOCUMENTS. THE CONTRACTOR IS RESPOINSIBLE FOR: CONFIRMING AND CORRELATING ALL QUANTITIES AND DIMENSIONS: SELECTING FABRICATION PROCESSES AND TECHNIQUES OF CONSTRUCTION: COORDINATING THEIR WORK WITH THAT OF ALL OTHER TRADES: AND PERFORMING THEIR WORK IN A SAFE AND SATISFACTORY MANNER.

CLD Consulting Engineers
540 Commercial Street
Manchester, NH 03101
603-668-8223

Job Number: 12-0120
Reviewed by: JF
Date: 11/17/15

FINISH	N/A			
MATERIAL	SEE DETAIL SHEETS			
HOLES				
ELECTRODES	PER WELD PROCEDURE			
WELDS	PER WELD PROCEDURE			
SURFACE PREP		1	11/16/15	Addressed Comments DLM
		NO	DATE	DESCRIPTION BY
		REVISIONS		

ARC ENTERPRISES, INC.

ADVANCED RESOURCES & CONST. ENTERPRISES, INCORPORATED
P.O. BOX 120 KINGFIELD, ME. 04947
PHONE: (207) 265-2646 – FAX: (207) 265-4054

DRAFTER	DLM
DATE	OCT. 2015
CHECKED	JJH
DATE	OCT. 2015

PROPOSED SHOP SPLICE LOCATIONS
STOWE, VT. Route 108 (Major Collector) Bridge No. 3
Project No. BRF 0235(15)
cc: CCS CONSTRUCTORS, INC.

PROJECT NO. 15-144
DWG. NO. 1

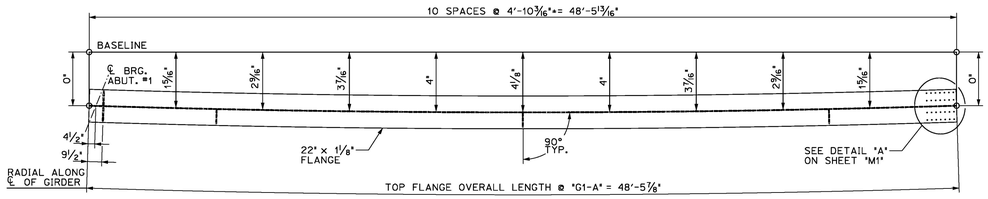

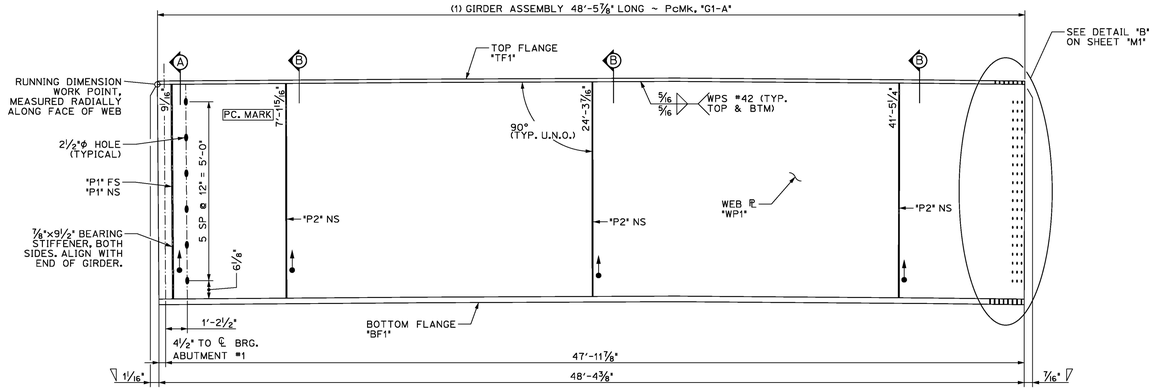

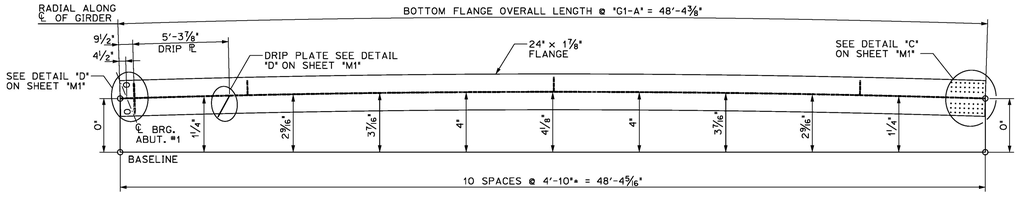

1/2 DIMENSIONAL PLANS & ELEVATIONS ~ GIRDER "G1-A"
HORIZONTAL SCALE: 1/4" = 1'-0"
VERTICAL SCALE EXAGGERATED 2:1

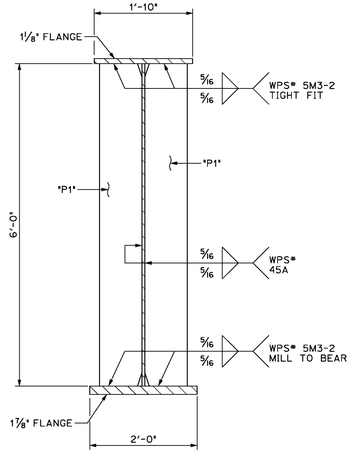

A/2 DIMENSIONAL SECTION
SCALE: 3/4" = 1'-0"

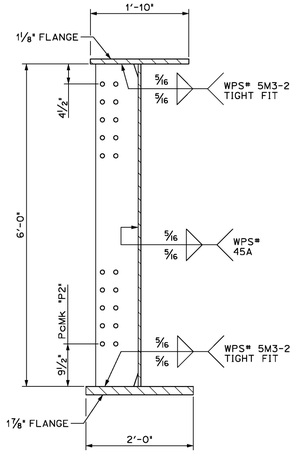

B/2 DIMENSIONAL SECTION
SCALE: 3/4" = 1'-0"

THE TWO CAMBER DIMENSIONS SHOWN REPRESENT THE FOLLOWING
TOP DIMENSION ~ TOTAL CAMBER IN FINISHED BEAM IN A NO-LOAD POSTION
BOTTOM DIMENSION ~ TOTAL CAMBER IN WEB ℄ AT TIME OF FABRICATION

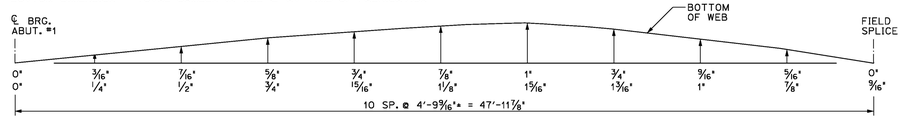

GIRDER "G1-A" CAMBER
N.T.S.

BILL OF MATERIALS

SHIP	SHIP MARK	NO. PCS.	PIECE MARK	DESCRIPTION	LENGTH	WT.	MATERIAL
1	G1-A			BRIDGE GIRDER ASSEMBLY	48'-5 7/8"	19800# EACH	
		1	WP1	℄ 5/8" x 72"	48'-5 7/8"	7450# EACH	CVN
		1	TF1	℄ 1 1/8" x 22"	48'-5 7/8"	4100# EACH	CVN
		1	BF1	℄ 1 7/8" x 24"	48'-4 3/8"	7420# EACH	CVN
		1	DP1	SEE SHEET M1			
		2	P1	SEE SHEET M2			
		3	P2	SEE SHEET M2			

FINISH	N/A
MATERIAL	SEE DETAIL SHEETS
HOLES	
ELECTRODES	PER WELD PROCEDURE
WELDS	PER WELD PROCEDURE
SURFACE PREP	

NO	DATE	DESCRIPTION	BY
		REVISIONS	

ARC ENTERPRISES, INC.
ADVANCED RESOURCES & CONST. ENTERPRISES, INCORPORATED
P.O. BOX 120 KINGFIELD, ME. 04947
PHONE: (207) 265-2646 – FAX: (207) 265-4054

DRAFTER	DLM	GIRDER G1-A	PROJECT NO. 15-144
DATE	OCT. 2015	STOWE, VT. Route 108 (Major Collector) Bridge No. 3 Project No. BRF 0235(15)	
CHECKED	JJH		DWG. NO. 2
DATE	OCT. 2015	CC: CCS CONSTRUCTORS, INC.	

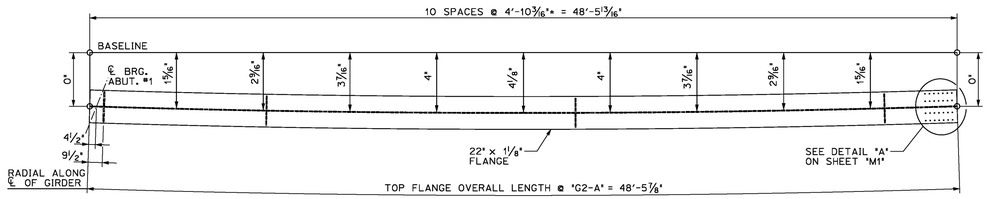

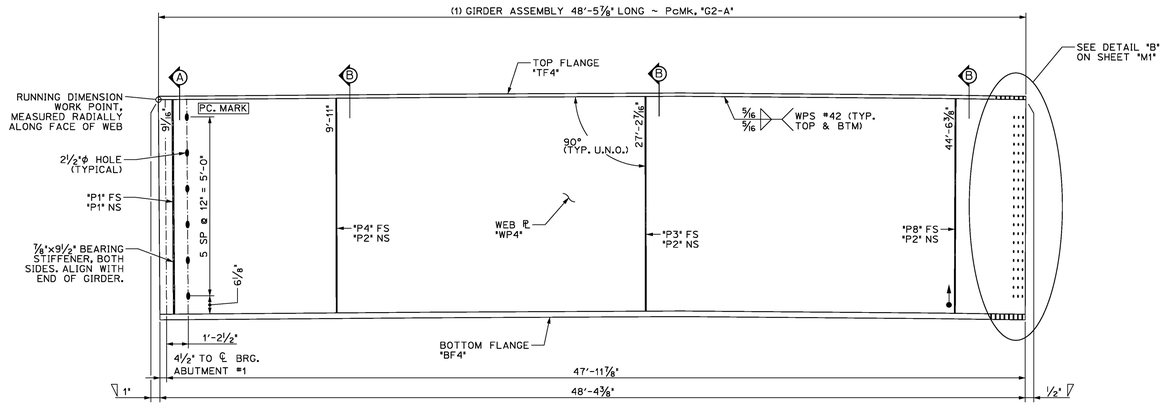

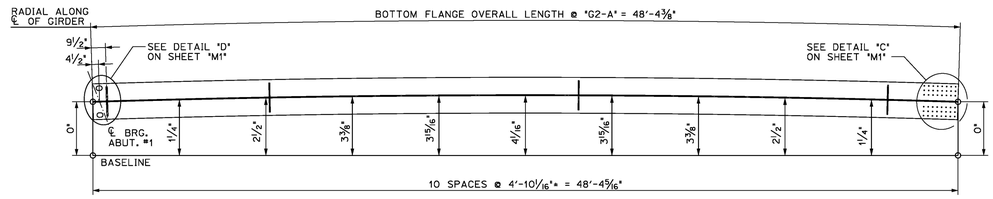

1 / 3 DIMENSIONAL PLANS & ELEVATIONS ~ GIRDER "G2-A"
HORIZONTAL SCALE: 1/4" = 1'-0"
VERTICAL SCALE EXAGGERATED 2:1

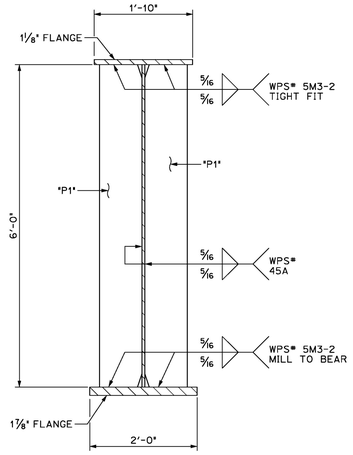

A / 3 DIMENSIONAL SECTION
SCALE: 3/4" = 1'-0"

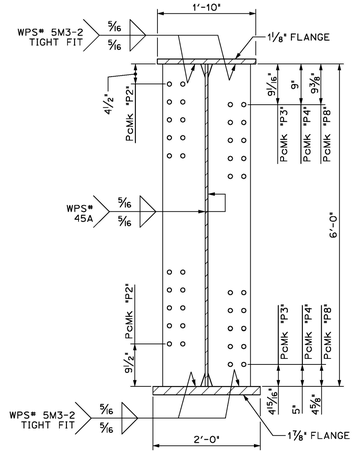

B / 3 DIMENSIONAL SECTION
SCALE: 3/4" = 1'-0"

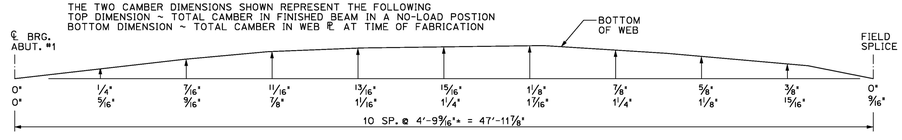

GIRDER "G2-A" CAMBER
N.T.S.

BILL OF MATERIALS

SHIP	SHIP MARK	NO. PCS.	PIECE MARK	DESCRIPTION	LENGTH	WT.	MATERIAL
1	G2-A			BRIDGE GIRDER ASSEMBLY	48'-5 7/8"	20000# EACH	
		1	WP4	℄ 5/8" x 72"	48'-5 7/8"	7500# EACH	CVN
		1	TF4	℄ 1 1/8" x 22"	48'-5 7/8"	4100# EACH	CVN
		1	BF4	℄ 1 7/8" x 24"	48'-4 3/8"	7450# EACH	CVN
		2	P1	SEE SHEET M2			
		3	P2	SEE SHEET M2			
		1	P3	SEE SHEET M2			
		1	P4	SEE SHEET M2			
		1	P8	SEE SHEET M2			

FINISH	N/A
MATERIAL	SEE DETAIL SHEETS
HOLES	
ELECTRODES	PER WELD PROCEDURE
WELDS	PER WELD PROCEDURE
SURFACE PREP	

NO	DATE	DESCRIPTION	BY
REVISIONS			

ARC ENTERPRISES, INC.
ADVANCED RESOURCES & CONST. ENTERPRISES, INCORPORATED
P.O. BOX 120 KINGFIELD, ME. 04947
PHONE: (207) 265-2646 – FAX: (207) 265-4054

DRAFTER	DLM	GIRDER G2-A	PROJECT NO. 15-144
DATE	OCT. 2015	STOWE, VT. Route 108 (Major Collector) Bridge No. 3 Project No. BRF 0235(15)	
CHECKED	JJH	CC: CCS CONSTRUCTORS, INC.	DWG. NO. 03
DATE	OCT. 2015		

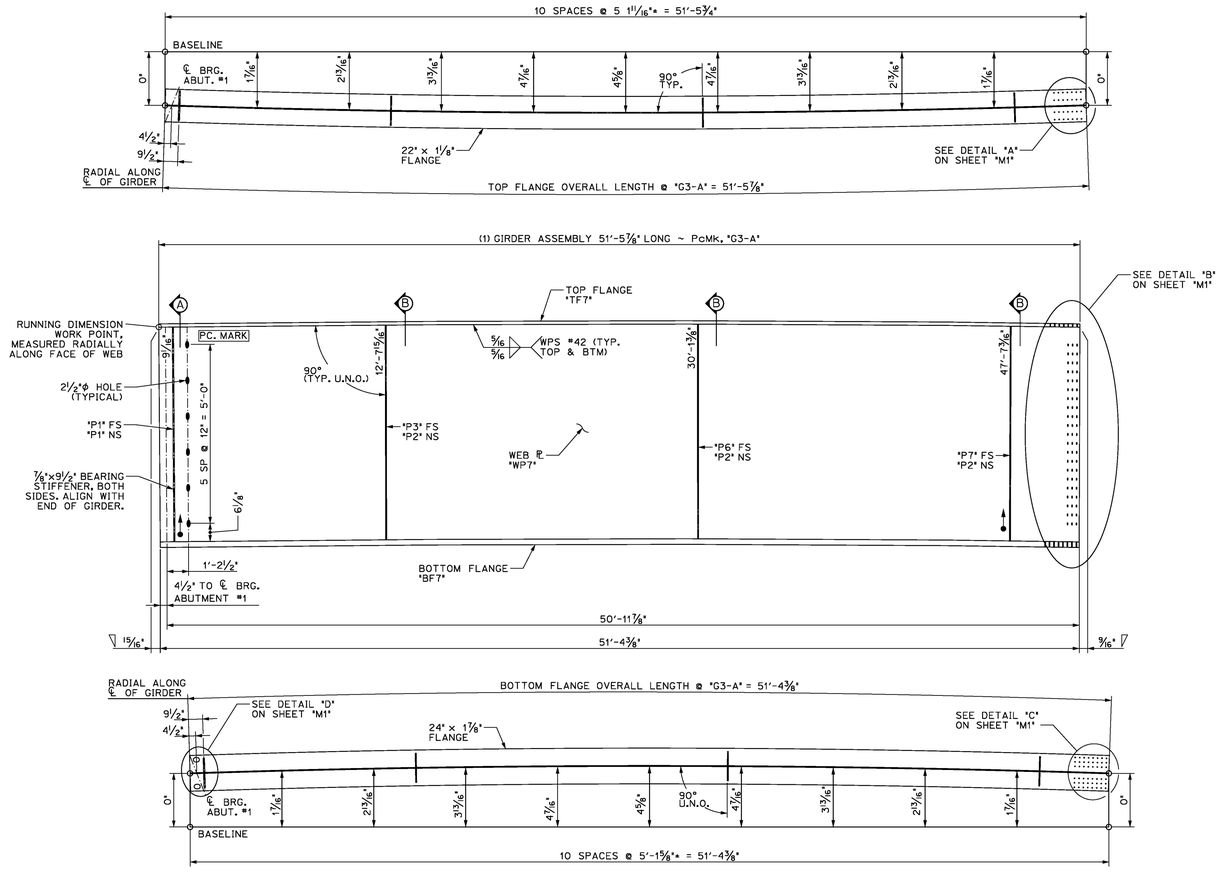

1/4 DIMENSIONAL PLANS & ELEVATIONS ~ GIRDER "G3-A"
HORIZONTAL SCALE: 1/4" = 1'-0"
VERTICAL SCALE EXAGGERATED 2:1

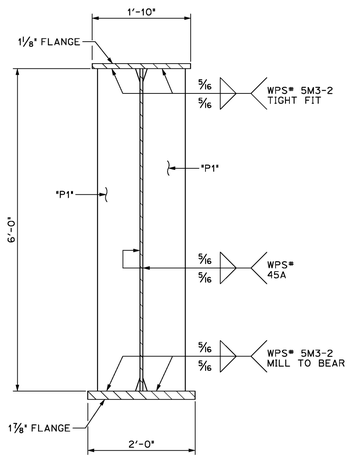

A/4 DIMENSIONAL SECTION
SCALE: ¾" = 1'-0"

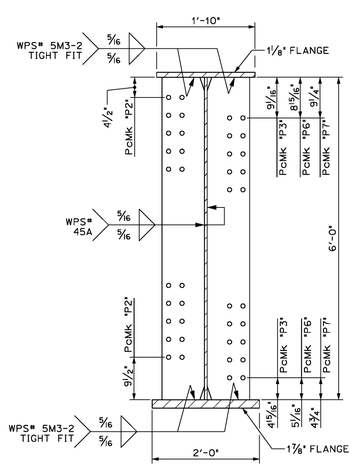

B/4 DIMENSIONAL SECTION
SCALE: ¾" = 1'-0"

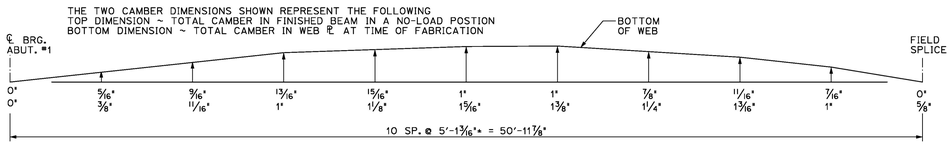

GIRDER "G3-A" CAMBER
N.T.S.

BILL OF MATERIALS

SHIP	SHIP MARK	NO. PCS.	PIECE MARK	DESCRIPTION	LENGTH	WT.	MATERIAL
1	G3-A			BRIDGE GIRDER ASSEMBLY	51 5⅞"	22000# EACH	
		1	WP7	ℙ ⅝" x 72"	51 5⅞"	7900# EACH	CVN
		1	TF7	ℙ 1⅛" x 22"	51 5⅞"	4400# EACH	CVN
		1	BF7	ℙ 1⅛" x 24"	51'-4⅜"	7900# EACH	CVN
		2	P1	SEE SHEET M2			
		3	P2	SEE SHEET M2			
		1	P3	SEE SHEET M2			
		1	P6	SEE SHEET M2			
		1	P7	SEE SHEET M2			

FINISH	N/A
MATERIAL	SEE DETAIL SHEETS
HOLES	
ELECTRODES	PER WELD PROCEDURE
WELDS	PER WELD PROCEDURE
SURFACE PREP	

NO	DATE	DESCRIPTION	BY
REVISIONS			

ARC ENTERPRISES, INC.
ADVANCED RESOURCES & CONST. ENTERPRISES, INCORPORATED
P.O. BOX 120 KINGFIELD, ME. 04947
PHONE: (207) 265-2646 – FAX: (207) 265-4054

DRAFTER	DLM	GIRDER G3-A	PROJECT NO. 15-144
DATE	OCT. 2015	STOWE, VT. Route 108 (Major Collector) Bridge No. 3 Project No. BRF 0235(15)	
CHECKED	JJH		DWG. NO. 4
DATE	OCT. 2015	cc: CCS CONSTRUCTORS, INC.	

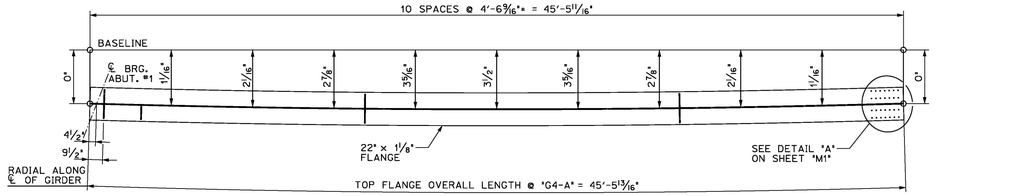

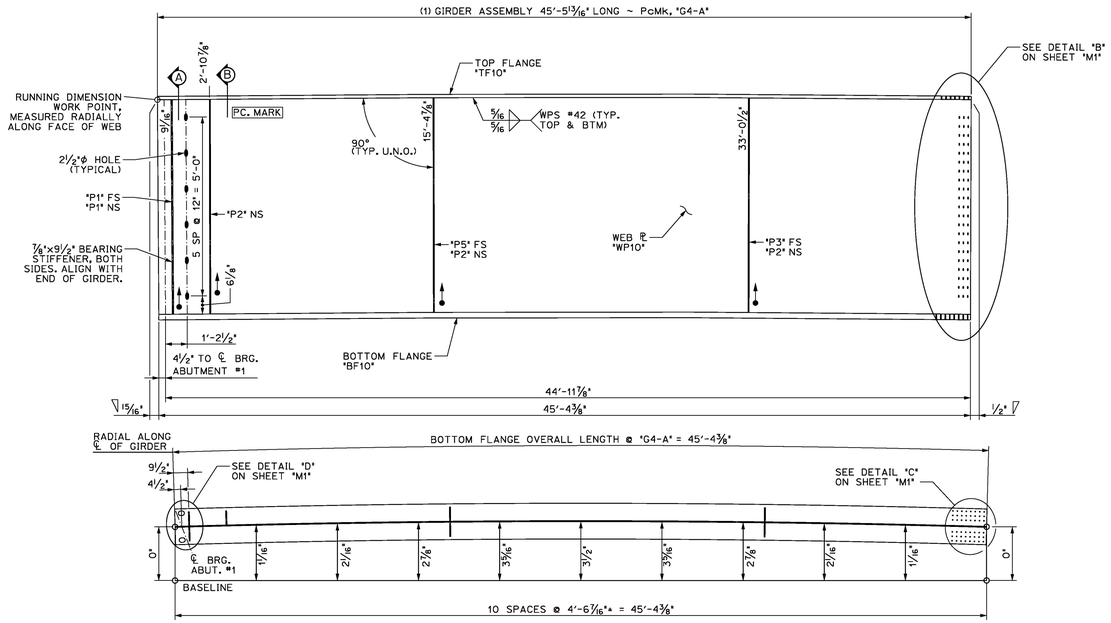

1/5 DIMENSIONAL PLANS & ELEVATIONS ~ GIRDER "G4-A"
HORIZONTAL SCALE: 1/4" = 1'-0"
VERTICAL SCALE EXAGGERATED 2:1

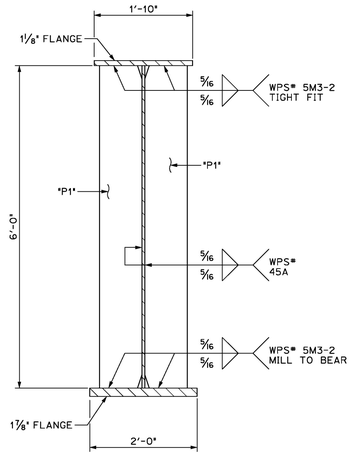

A/5 DIMENSIONAL SECTION
SCALE: 3/4" = 1'-0"

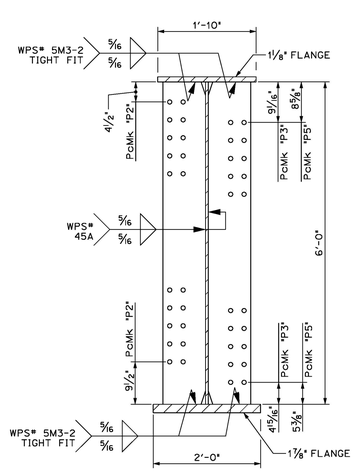

B/5 DIMENSIONAL SECTION
SCALE: 3/4" = 1'-0"

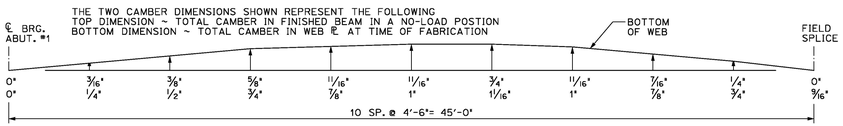

GIRDER "G4-A" CAMBER
N.T.S.

BILL OF MATERIALS

SHIP	SHIP MARK	NO. PCS.	PIECE MARK	DESCRIPTION	LENGTH	WT.	MATERIAL
1	G4-A			BRIDGE GIRDER ASSEMBLY	45'-5 13/16"	19000# EACH	
		1	WP10	℄ 5/8" x 72"	45'-5 13/16"	7000# EACH	CVN
		1	TF10	℄ 1 1/8" x 22"	45'-5 13/16"	3900# EACH	CVN
		1	BF10	℄ 1 7/8" x 24"	45'-4 3/8"	7000# EACH	CVN
		2	P1	SEE SHEET M2			
		3	P2	SEE SHEET M2			
		1	P3	SEE SHEET M2			
		1	P5	SEE SHEET M2			

FINISH	N/A
MATERIAL	SEE DETAIL SHEETS
HOLES	
ELECTRODES	PER WELD PROCEDURE
WELDS	PER WELD PROCEDURE
SURFACE PREP	

NO	DATE	DESCRIPTION	BY

REVISIONS

ARC ENTERPRISES, INC.
ADVANCED RESOURCES & CONST. ENTERPRISES, INCORPORATED
P.O. BOX 120 KINGFIELD, ME. 04947
PHONE: (207) 265-2646 – FAX: (207) 265-4054

DRAFTER	DLM	GIRDER G4-A	PROJECT NO. 15-144
DATE	OCT. 2015	STOWE, VT. Route 108 (Major Collector) Bridge No. 3 Project No. BRF 0235(15)	
CHECKED	JJH	CC: CCS CONSTRUCTORS, INC.	DWG. NO. 5
DATE	OCT. 2015		

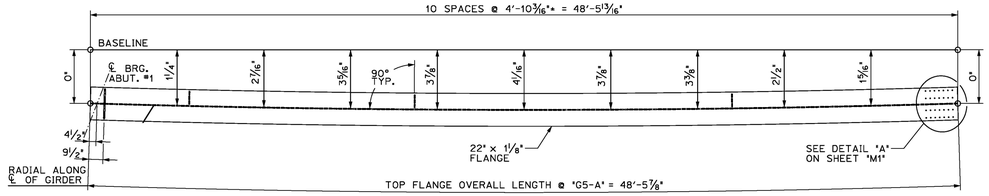

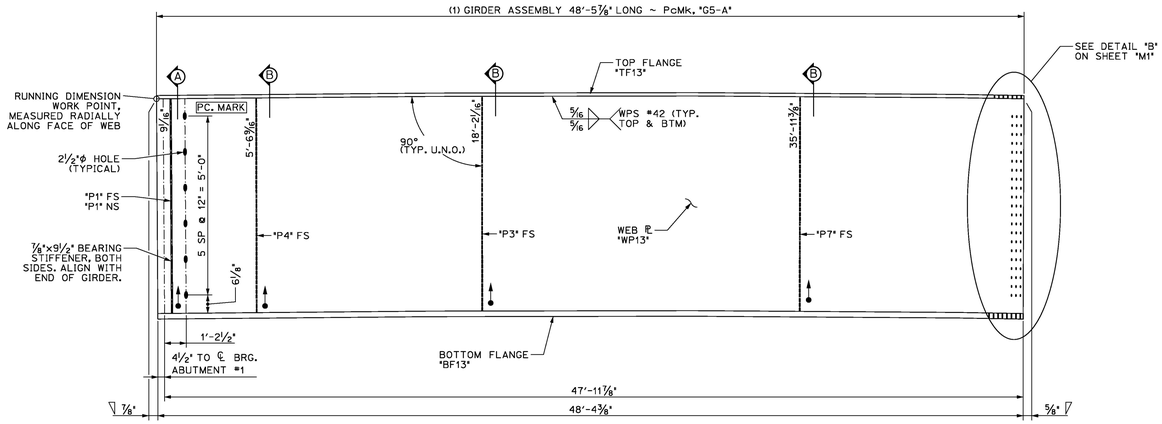

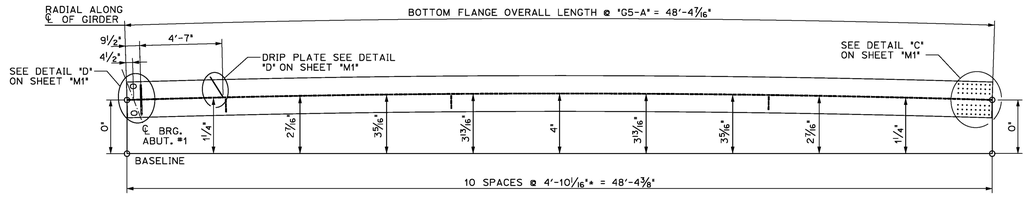

1/6 DIMENSIONAL PLANS & ELEVATIONS ~ GIRDER "G5-A"
HORIZONTAL SCALE: 1/4" = 1'-0"
VERTICAL SCALE EXAGGERATED 2:1

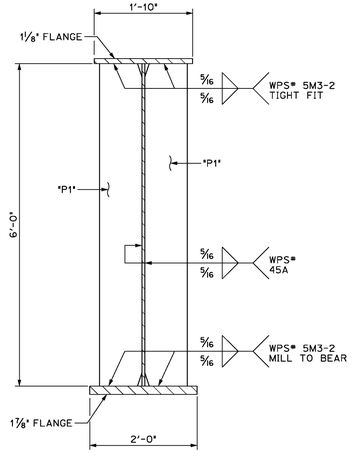

A/6 DIMENSIONAL SECTION
SCALE: 3/4" = 1'-0"

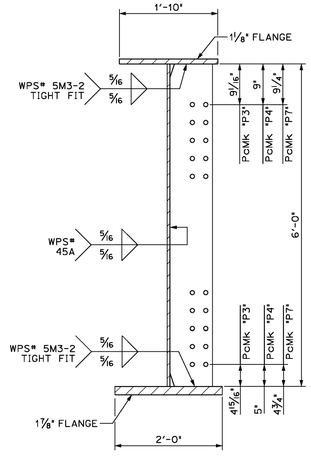

B/6 DIMENSIONAL SECTION
SCALE: 3/4" = 1'-0"

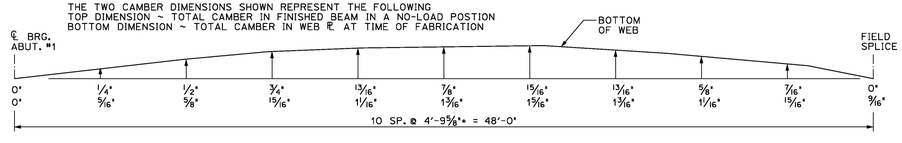

GIRDER "G5-A" CAMBER
N.T.S.

BILL OF MATERIALS

SHIP	SHIP MARK	NO. PCS.	PIECE MARK	DESCRIPTION	LENGTH	WT.	MATERIAL
1	G5-A			BRIDGE GIRDER ASSEMBLY	48'-5 7/8"	19700# EACH	
		1	WP13	℞ 5/8" x 72"	48'-5 7/8"	7450# EACH	CVN
		1	TF13	℞ 1 1/8" x 22"	48'-5 7/8"	4100# EACH	CVN
		1	BF13	℞ 1 7/8" x 24"	48'-4 7/16"	7420# EACH	CVN
		1	DP1	SEE SHEET M1			
		2	P1	SEE SHEET M2			
		1	P3	SEE SHEET M2			
		1	P4	SEE SHEET M2			
		1	P7	SEE SHEET M2			

FINISH	N/A
MATERIAL	SEE DETAIL SHEETS
HOLES	
ELECTRODES	PER WELD PROCEDURE
WELDS	PER WELD PROCEDURE
SURFACE PREP	

NO	DATE	DESCRIPTION	BY

REVISIONS

ARC ENTERPRISES, INC.
ADVANCED RESOURCES & CONST. ENTERPRISES, INCORPORATED
P.O. BOX 120 KINGFIELD, ME. 04947
PHONE: (207) 265-2646 – FAX: (207) 265-4054

DRAFTER	DLM	GIRDER G5-A	PROJECT NO. 15-144
DATE	OCT. 2015	STOWE, VT. Route 108 (Major Collector) Bridge No. 3 Project No. BRF 0235(15)	DWG. NO. 06
CHECKED	JJH	cc: CCS CONSTRUCTORS, INC.	
DATE	OCT. 2015		

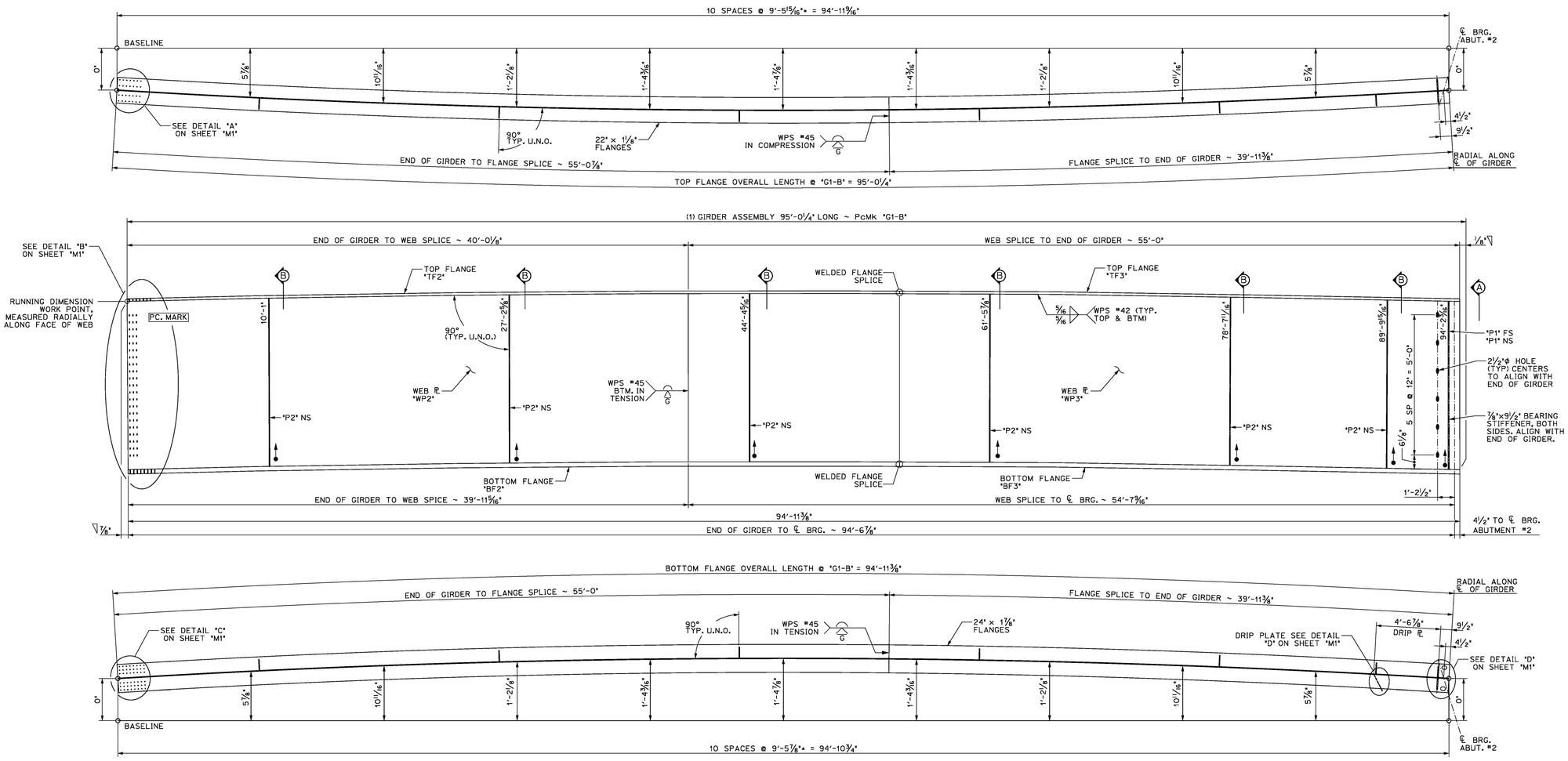

1/7 DIMENSIONAL PLANS & ELEVATIONS ~ GIRDER "G1-B"
HORIZONTAL SCALE: 1/4" = 1'-0"
VERTICAL SCALE EXAGGERATED 2:1

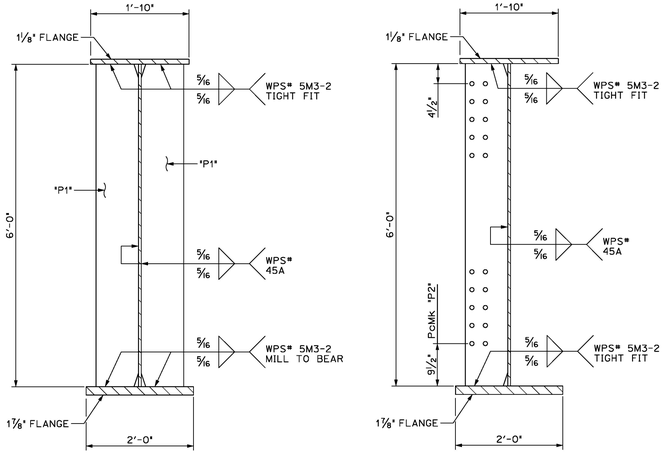

A 1/7 DIMENSIONAL SECTION
SCALE: 3/4" = 1'-0"

B 1/7 DIMENSIONAL SECTION
SCALE: 3/4" = 1'-0"

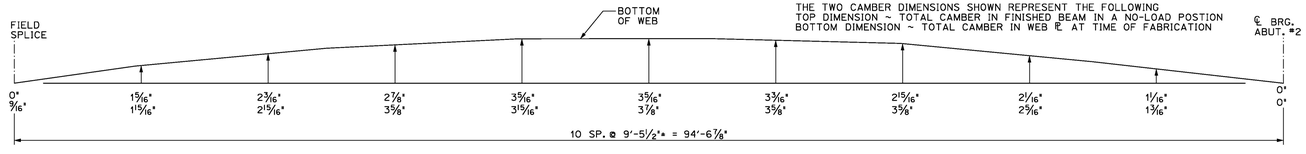

GIRDER "G1-B" CAMBER
N.T.S.

BILL OF MATERIALS

SHIP	SHIP MARK	NO. PCS.	PIECE MARK	DESCRIPTION	LENGTH	WT.	MATERIAL
1	G1-B			BRIDGE GIRDER ASSEMBLY	95'-0 1/4"	39000# EACH	
		1	WP2	ℙ 5/8" x 72"	40'-0 1/8"	6200# EACH	CVN
		1	WP3	ℙ 5/8" x 72"	55'-0"	8500# EACH	CVN
		1	TF2	ℙ 1 1/8" x 22"	55'-0 7/8"	4700# EACH	CVN
		1	TF3	ℙ 1 1/8" x 22"	39'-11 3/8"	3400# EACH	CVN
		1	BF2	ℙ 1 1/8" x 24"	55'-0"	8500# EACH	CVN
		1	BF3	ℙ 1 1/8" x 24"	39'-11 3/8"	6200# EACH	CVN
		1	DP1	SEE SHEET M1			
		2	P1	SEE SHEET M2			
		6	P2	SEE SHEET M2			

FINISH	N/A
MATERIAL	SEE DETAIL SHEETS
HOLES	
ELECTRODES	PER WELD PROCEDURE
WELDS	PER WELD PROCEDURE
SURFACE PREP	

NO	DATE	DESCRIPTION	BY

REVISIONS

ARC ENTERPRISES, INC.
ADVANCED RESOURCES & CONST. ENTERPRISES, INCORPORATED
P.O. BOX 120 KINGFIELD, ME. 04947
PHONE: (207) 265-2646 ~ FAX: (207) 265-4054

DRAFTER	DLM	GIRDER G1-B	PROJECT NO. 15-144
DATE	OCT. 2015	STOWE, VT. Route 108 (Major Collector) Bridge No. 3 Project No. BRF 0235(15)	
CHECKED	JJH	cc: CCS CONSTRUCTORS, INC.	DWG. NO. 07
DATE	OCT. 2015		

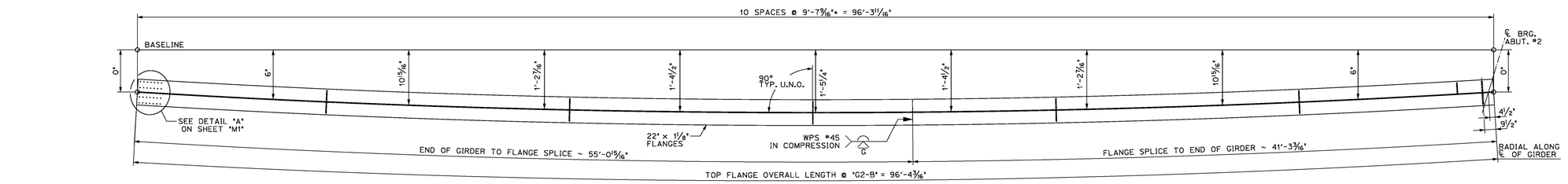

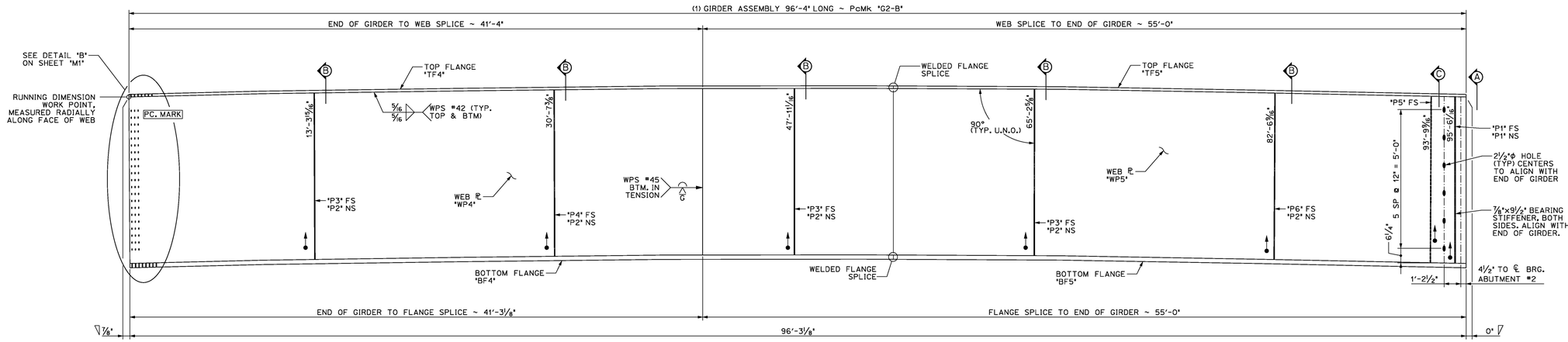

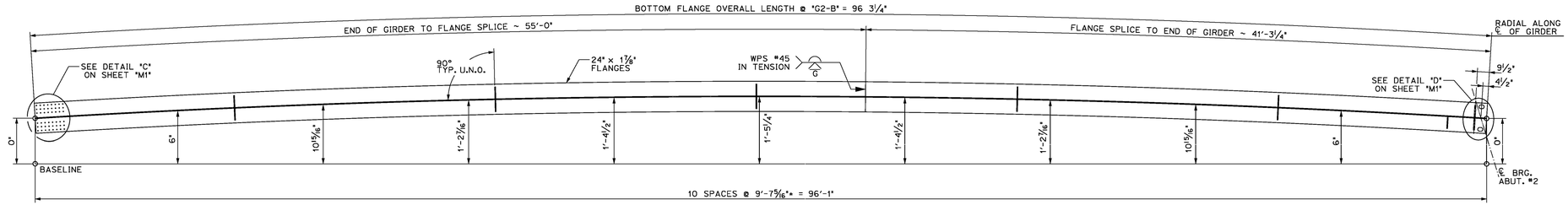

1/8 DIMENSIONAL PLANS & ELEVATIONS ~ GIRDER "G2-B"

HORIZONTAL SCALE: 1/4" = 1'-0"
VERTICAL SCALE EXAGGERATED 2:1

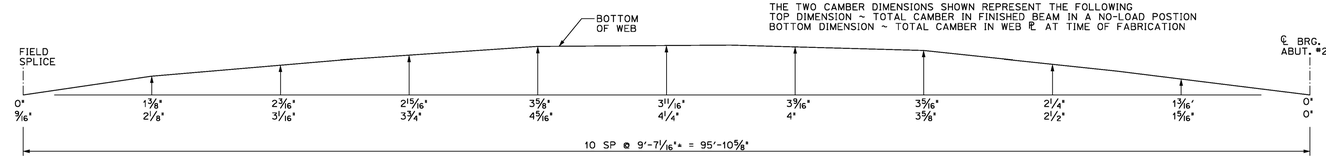

GIRDER "G2-B" CAMBER
N.T.S.

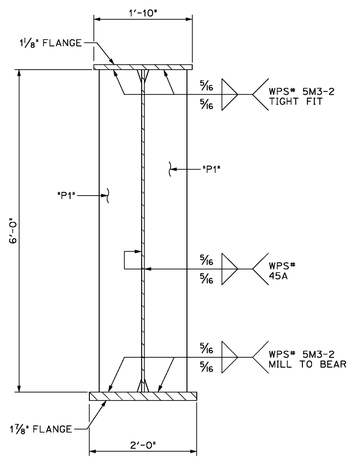

A 8 DIMENSIONAL SECTION
SCALE: 3/4" = 1'-0"

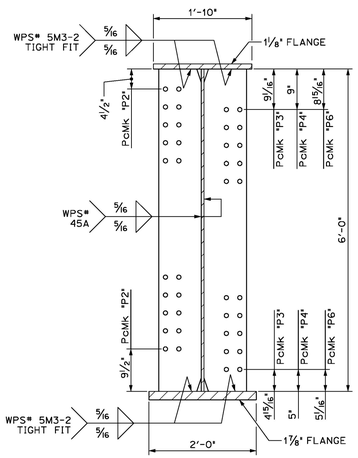

B 8 DIMENSIONAL SECTION
SCALE: 3/4" = 1'-0"

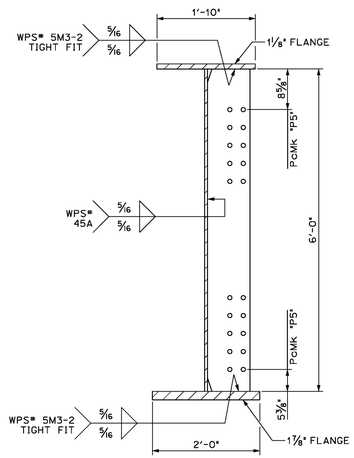

C 8 DIMENSIONAL SECTION
SCALE: 3/4" = 1'-0"

BILL OF MATERIALS

SHIP	SHIP MARK	NO. PCS.	PIECE MARK	DESCRIPTION	LENGTH	WT.	MATERIAL
1	G2-B			BRIDGE GIRDER ASSEMBLY	96'-4"	39500# EACH	
		1	WP4	℄ 5/8" x 72"	41'-4"	6500# EACH	CVN
		1	WP5	℄ 5/8" x 72"	55'-0"	8500# EACH	CVN
		1	TF4	℄ 1 1/8" x 22"	55'-0 15/16"	4800# EACH	CVN
		1	TF5	℄ 1 1/8" x 22"	41'-3 3/16"	3600# EACH	CVN
		1	BF4	℄ 1 1/8" x 24"	55'-0"	8500# EACH	CVN
		1	BF5	℄ 1 1/8" x 24"	41'-3 1/4"	6500# EACH	CVN
		2	P1	SEE SHEET M2			
		5	P2	SEE SHEET M2			
		3	P3	SEE SHEET M2			
		1	P4	SEE SHEET M2			
		1	P5	SEE SHEET M2			
		1	P6	SEE SHEET M2			

FINISH	N/A
MATERIAL	SEE DETAIL SHEETS
HOLES	
ELECTRODES	PER WELD PROCEDURE
WELDS	PER WELD PROCEDURE
SURFACE PREP	

NO	DATE	DESCRIPTION	BY

REVISIONS

ARC ENTERPRISES, INC.
ADVANCED RESOURCES & CONST. ENTERPRISES, INCORPORATED
P.O. BOX 120 KINGFIELD, ME. 04947
PHONE: (207) 265-2646 – FAX: (207) 265-4054

DRAFTER	DLM	GIRDER G2-B	PROJECT NO. 15-144
DATE	OCT. 2015	STOWE, VT. Route 108 (Major Collector) Bridge No. 3 Project No. BRF 0235(15)	
CHECKED	JJH	cc: CCS CONSTRUCTORS, INC.	DWG. NO. 08
DATE	OCT. 2015		

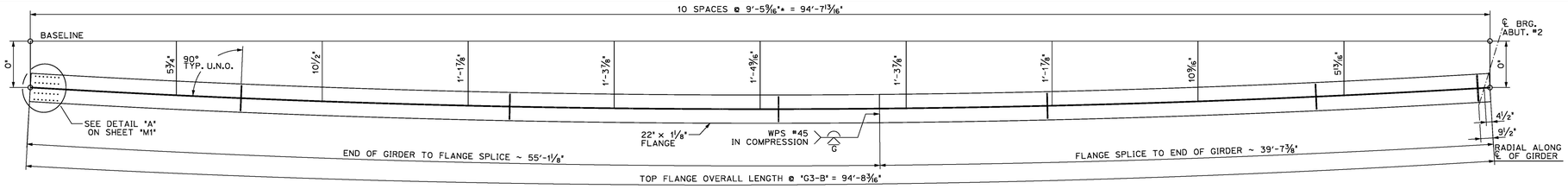

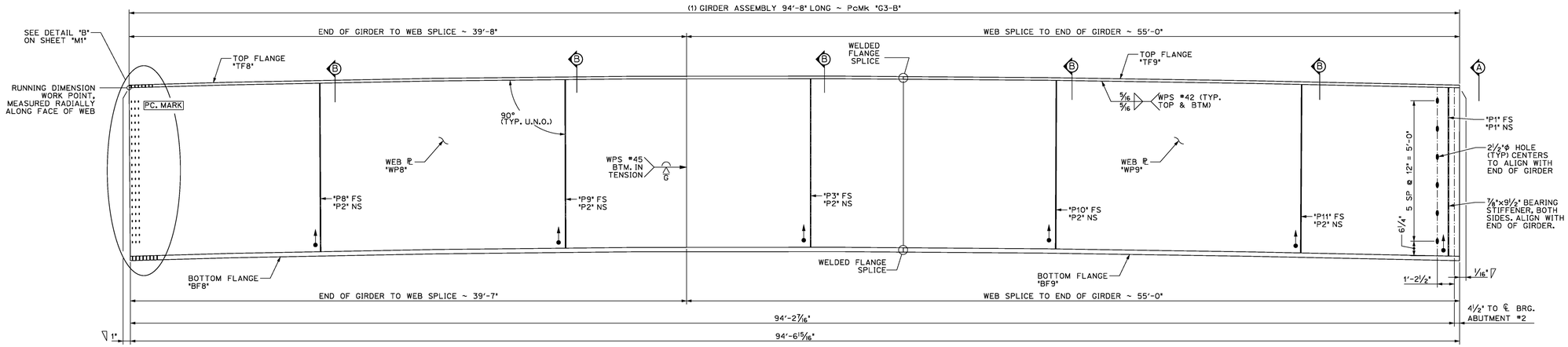

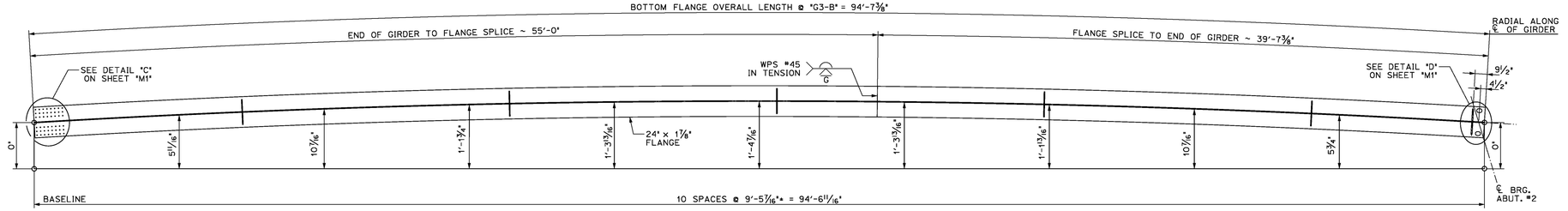

DENOTES DIRECTION OF WELD

1/9 DIMENSIONAL PLANS & ELEVATIONS ~ GIRDER "G3-B"
HORIZONTAL SCALE: 1/4" = 1'-0"
VERTICAL SCALE EXAGGERATED 2:1

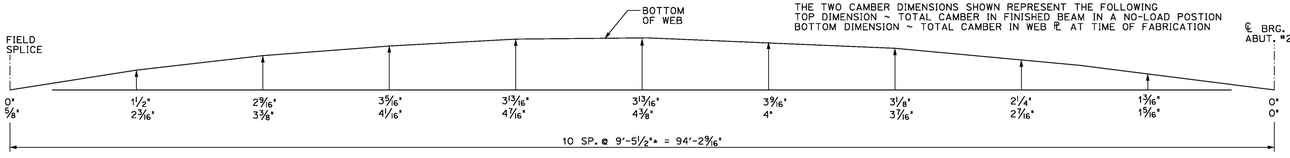

GIRDER "G3-B" CAMBER
N.T.S.

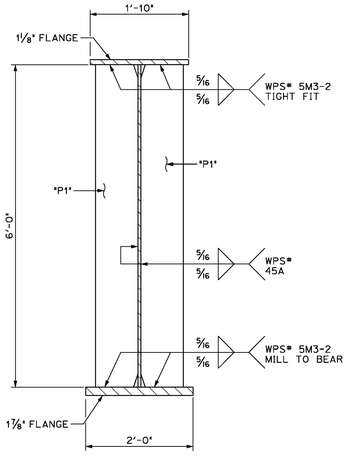

A 9 DIMENSIONAL SECTION
SCALE: 3/4" = 1'-0"

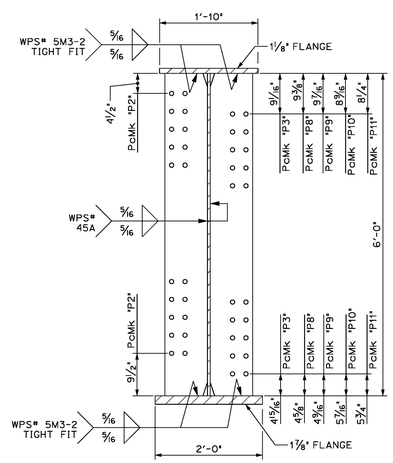

B 9 DIMENSIONAL SECTION
SCALE: 3/4" = 1'-0"

BILL OF MATERIALS

SHIP	SHIP MARK	NO. PCS.	PIECE MARK	DESCRIPTION	LENGTH	WT.	MATERIAL
1	G3-B			BRIDGE GIRDER ASSEMBLY	94'-8"	39000# EACH	
		1	WP8	℄ 5/8" x 72"	39'-8"	6100# EACH	CVN
		1	WP9	℄ 5/8" x 72"	55'-0"	8500# EACH	CVN
		1	TF8	℄ 1 1/8" x 22"	55'-1 1/8"	4700# EACH	CVN
		1	TF9	℄ 1 1/8" x 22"	39'-7 3/8"	3500# EACH	CVN
		1	BF8	℄ 1 7/8" x 24"	55'-0"	8500# EACH	CVN
		1	BF9	℄ 1 7/8" x 24"	39'-7 3/8"	6100# EACH	CVN
		2	P1	SEE SHEET M2			
		5	P2	SEE SHEET M2			
		1	P3	SEE SHEET M2			
		1	P8	SEE SHEET M2			
		1	P9	SEE SHEET M2			
		1	P10	SEE SHEET M2			
		1	P11	SEE SHEET M2			

FINISH	N/A
MATERIAL	SEE DETAIL SHEETS
HOLES	
ELECTRODES	PER WELD PROCEDURE
WELDS	PER WELD PROCEDURE
SURFACE PREP	

NO	DATE	DESCRIPTION	BY
REVISIONS			

ARC ENTERPRISES, INC.
ADVANCED RESOURCES & CONST. ENTERPRISES, INCORPORATED
P.O. BOX 120 KINGFIELD, ME. 04947
PHONE: (207) 265-2646 – FAX: (207) 265-4054

DRAFTER	DLM
DATE	OCT. 2015
CHECKED	JJH
DATE	OCT. 2015

GIRDER G3-B
STOWE, VT. Route 108 (Major Collector) Bridge No. 3
Project No. BRF 0235(15)
CC: CCS CONSTRUCTORS, INC.

PROJECT NO. 15-144
DWG. NO. 09

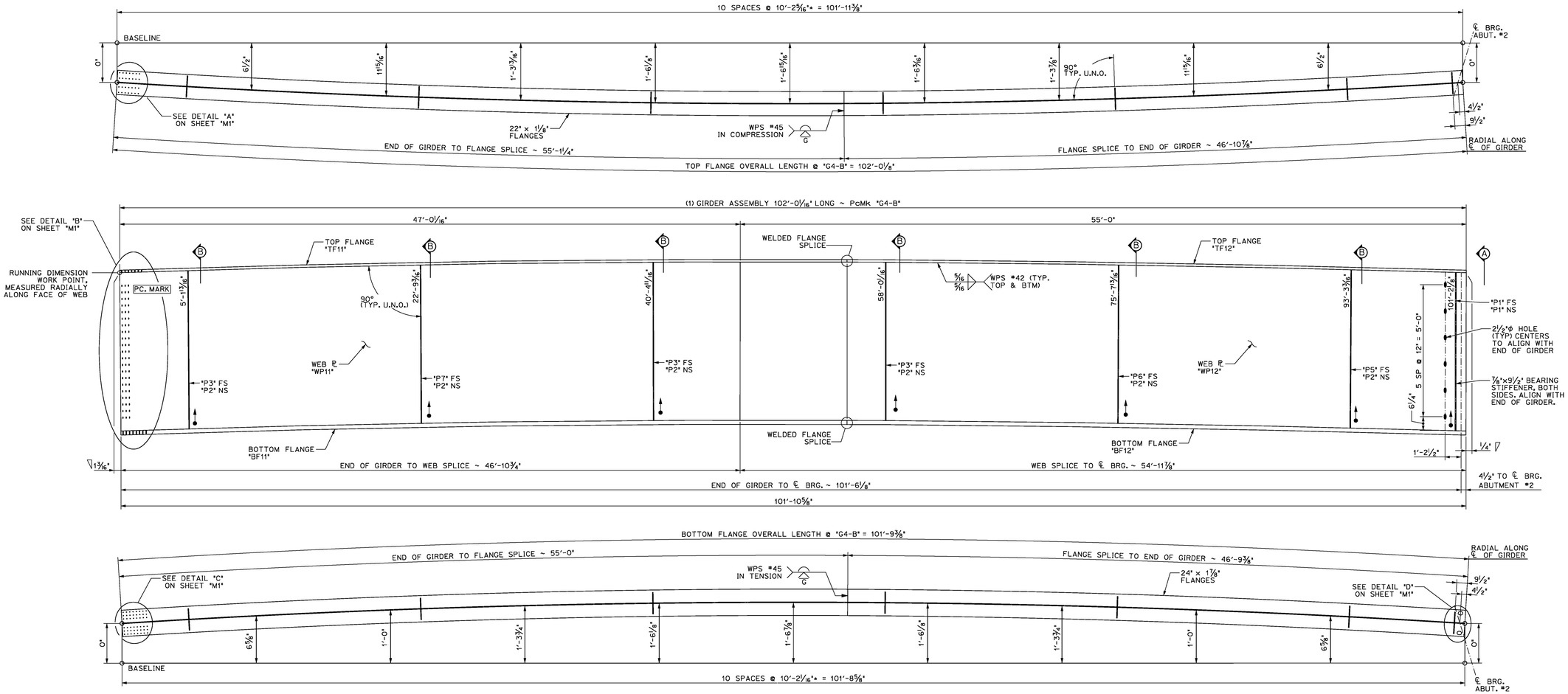

1 / 10 DIMENSIONAL PLANS & ELEVATIONS ~ GIRDER "G4-B"
HORIZONTAL SCALE: 1/4" = 1'-0"
VERTICAL SCALE EXAGGERATED 2:1

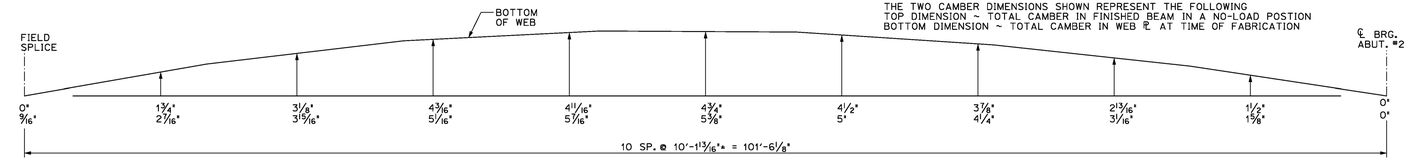

GIRDER "G4-B" CAMBER
N.T.S.

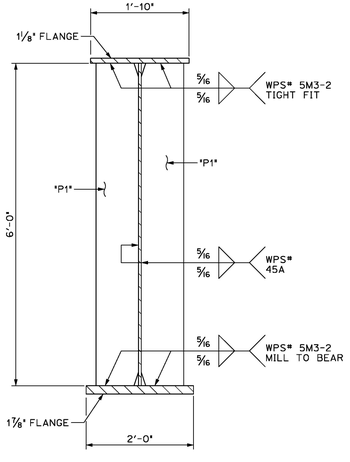

A / 10 DIMENSIONAL SECTION
SCALE: 3/4" = 1'-0"

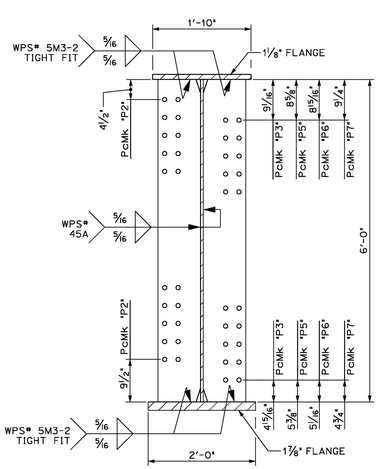

B / 10 DIMENSIONAL SECTION
SCALE: 3/4" = 1'-0"

BILL OF MATERIALS

SHIP	SHIP MARK	NO. PCS.	PIECE MARK	DESCRIPTION	LENGTH	WT.	MATERIAL
1	G4-B			BRIDGE GIRDER ASSEMBLY	102 0/16"	41700# EACH	
		1	WP11	ℜ 5/8" x 72"	47'-0/16"	7500# EACH	CVN
		1	WP12	ℜ 5/8" x 72"	55'-0"	8500# EACH	CVN
		1	TF11	ℜ 1 1/8" x 22"	55'-1 1/4"	4700# EACH	CVN
		1	TF12	ℜ 1 1/8" x 22"	46'-10 7/8"	4000# EACH	CVN
		1	BF11	ℜ 1 1/8" x 24"	55'-0"	8500# EACH	CVN
		1	BF12	ℜ 1 1/8" x 24"	46'-9 3/8"	7500# EACH	CVN
		2	P1	SEE SHEET M2			
		6	P2	SEE SHEET M2			
		3	P3	SEE SHEET M2			
		1	P5	SEE SHEET M2			
		1	P6	SEE SHEET M2			
		1	P7	SEE SHEET M2			

FINISH	N/A
MATERIAL	SEE DETAIL SHEETS
HOLES	
ELECTRODES	PER WELD PROCEDURE
WELDS	PER WELD PROCEDURE
SURFACE PREP	

NO	DATE	DESCRIPTION	BY
REVISIONS			

ARC ENTERPRISES, INC.
ADVANCED RESOURCES & CONST. ENTERPRISES, INCORPORATED
P.O. BOX 120 KINGFIELD, ME. 04947
PHONE: (207) 265-2646 – FAX: (207) 265-4054

DRAFTER	DLM	GIRDER G4-B	PROJECT NO. 15-144
DATE	OCT. 2015	STOWE, VT. Route 108 (Major Collector) Bridge No. 3 Project No. BRF 0235(15)	
CHECKED	JJH	CC: CCS CONSTRUCTORS, INC.	DWG. NO. 10
DATE	OCT. 2015		

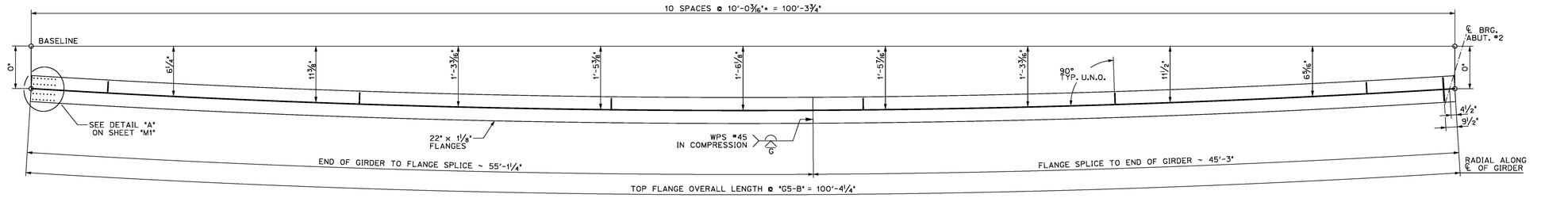

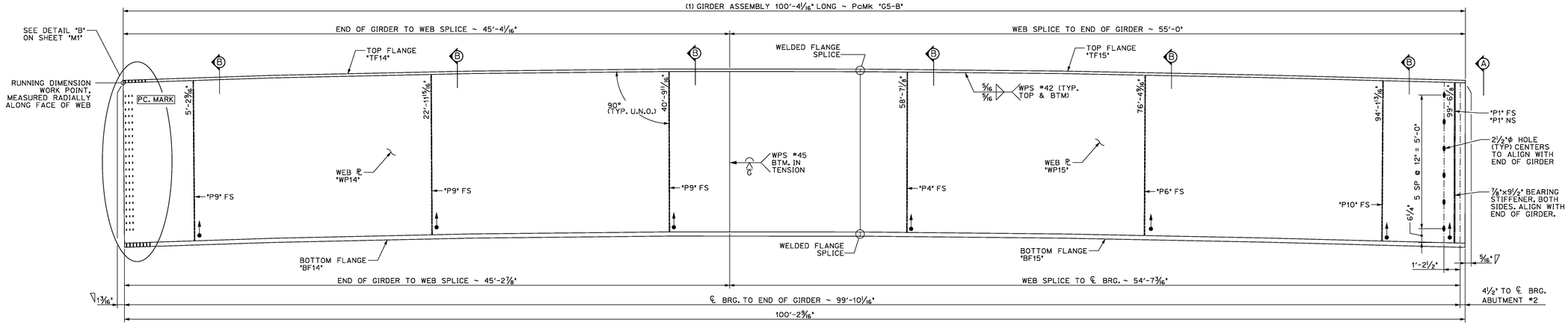

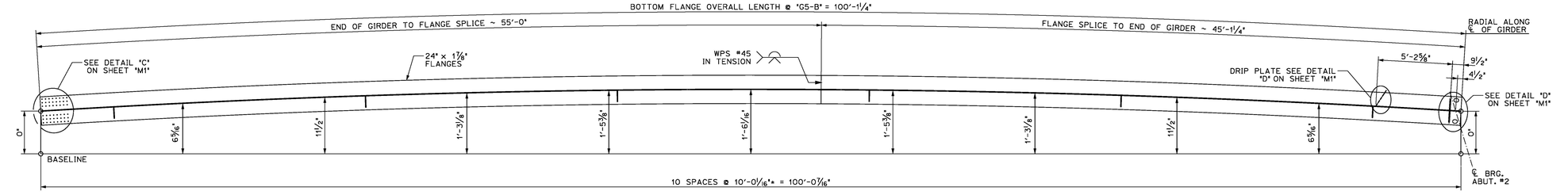

1 / 11 DIMENSIONAL PLANS & ELEVATIONS ~ GIRDER "G5-B"
HORIZONTAL SCALE: 1/4" = 1'-0"
VERTICAL SCALE EXAGGERATED 2:1

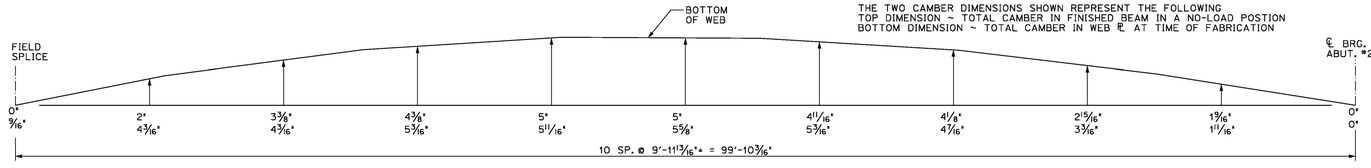

GIRDER "G5-B" CAMBER
N.T.S.

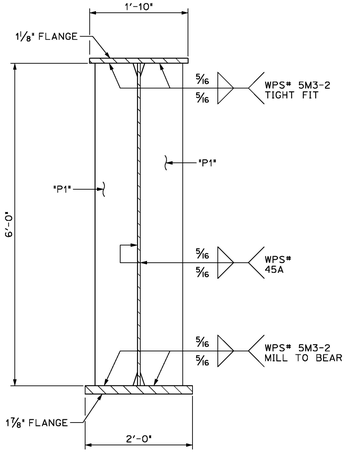

A / 11 DIMENSIONAL SECTION
SCALE: 3/4" = 1'-0"

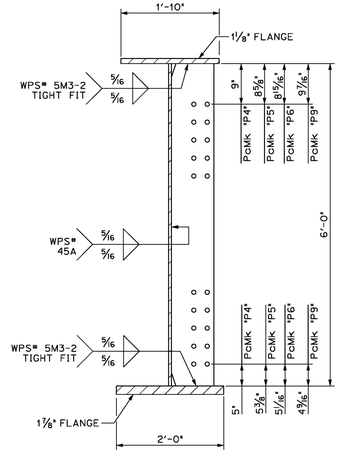

B / 11 DIMENSIONAL SECTION
SCALE: 3/4" = 1'-0"

BILL OF MATERIALS

SHIP	SHIP MARK	NO. PCS.	PIECE MARK	DESCRIPTION	LENGTH	WT.	MATERIAL
1	G5-B			BRIDGE GIRDER ASSEMBLY	100'-4 1/16"	40500# EACH	
		1	WP14	ℙ 5/8" x 72"	45'-4 1/16"	7000# EACH	CVN
		1	WP15	ℙ 5/8" x 72"	55'-0"	8500# EACH	CVN
		1	TF14	ℙ 1 1/8" x 22"	55'-1 1/4"	4700# EACH	CVN
		1	TF15	ℙ 1 1/8" x 22"	45'-3"	3900# EACH	CVN
		1	BF14	ℙ 1 7/8" x 24"	55'0"	8500# EACH	CVN
		1	BF15	ℙ 1 7/8" x 24"	45'-1 1/4"	7000# EACH	CVN
		1	DP1	SEE SHEET M1			
		2	P1	SEE SHEET M2			
		1	P4	SEE SHEET M2			
		1	P6	SEE SHEET M2			
		3	P9	SEE SHEET M2			
		1	P10	SEE SHEET M2			

FINISH	N/A
MATERIAL	SEE DETAIL SHEETS
HOLES	
ELECTRODES	PER WELD PROCEDURE
WELDS	PER WELD PROCEDURE
SURFACE PREP	

NO	DATE	DESCRIPTION	BY

REVISIONS

ARC ENTERPRISES, INC.
ADVANCED RESOURCES & CONST. ENTERPRISES, INCORPORATED
P.O. BOX 120 KINGFIELD, ME. 04947
PHONE: (207) 265-2646 – FAX: (207) 265-4054

DRAFTER	DLM
DATE	OCT. 2015
CHECKED	JJH
DATE	OCT. 2015

GIRDER G5-B
STOWE, VT. Route 108 (Major Collector) Bridge No. 3
Project No. BRF 0235(15)
SC: CCS CONSTRUCTORS, INC.

PROJECT NO. 15-144
DWG. NO. 11

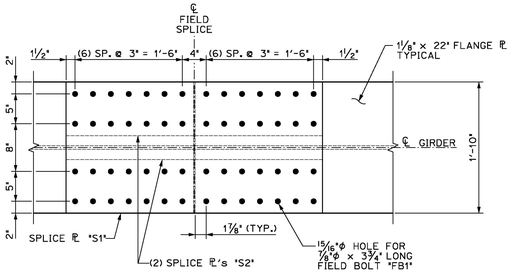

A/M1 TOP FLANGE FIELD SPLICE
SCALE: 1" = 1'-0"

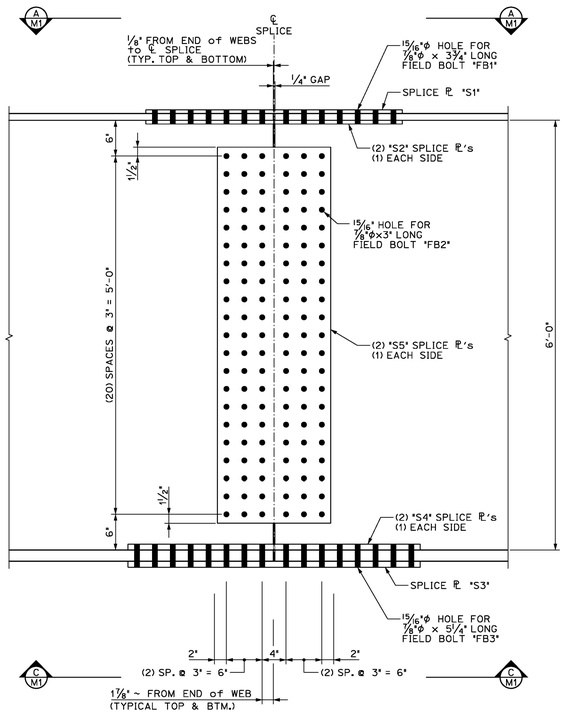

B/M1 WEB FIELD SPLICE
SCALE: 1" = 1'-0"

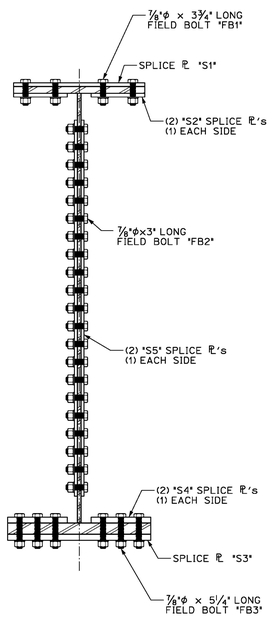

SECTION AT WEB FIELD SPLICE
SCALE: 1" = 1'-0"

C/M1 BOTTOM FLANGE FIELD SPLICE
SCALE: 1" = 1'-0"

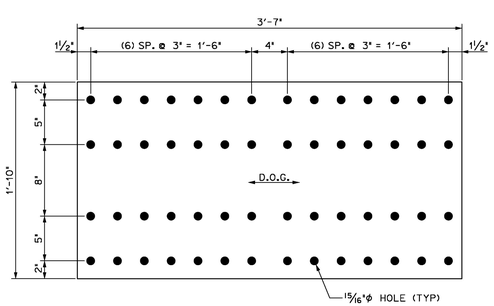

⅝" SPLICE PL, PcMk. "S1"
SCALE: 1½" = 1'-0"

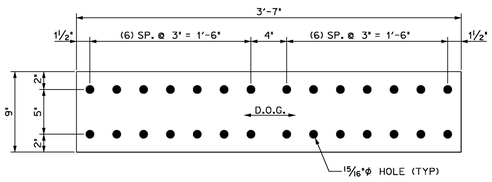

⅝" SPLICE PL, PcMk. "S2"
SCALE: 1½" = 1'-0"

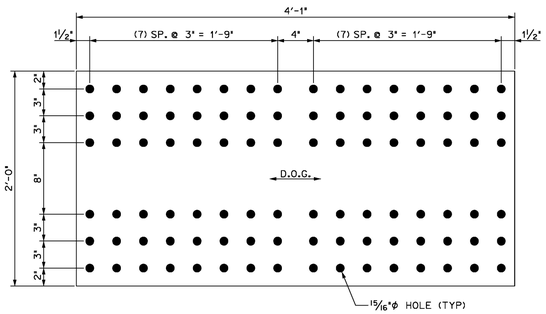

1" SPLICE PL, PcMk. "S3"
SCALE: 1½" = 1'-0"

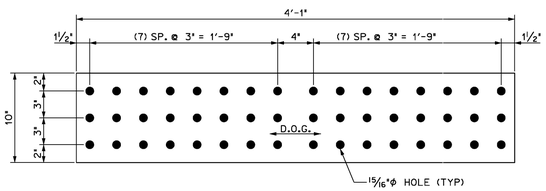

1" SPLICE PL, PcMk. "S4"
SCALE: 1½" = 1'-0"

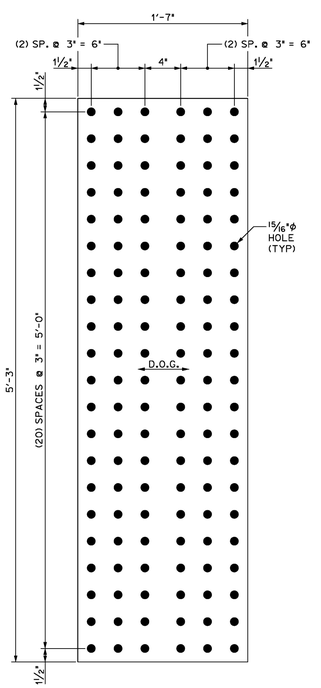

½" SPLICE PL, PcMk. "S5"
SCALE: 1½" = 1'-0"

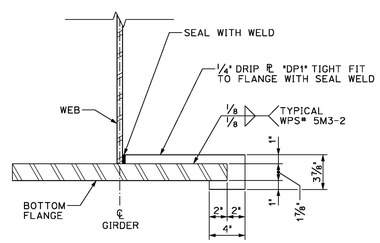

X/M1 DRIP PLATE SECTION
SCALE: 1½" = 1'-0"

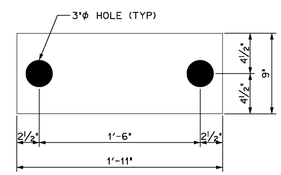

1⅝" SOLE PL "SP1"
SCALE: 1½" = 1'-0"

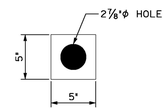

½" PL WASHER "PW"
SCALE: 1½" = 1'-0"

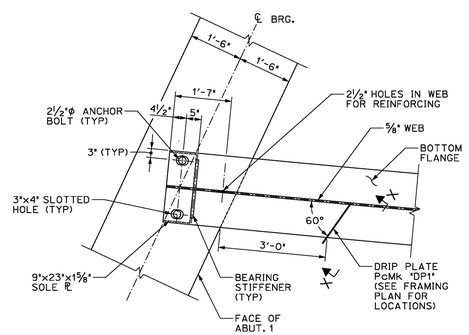

D/M1 END OF GIRDER DETAIL
SCALE: 1/2" = 1'-0"

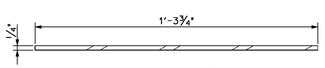

"DP1" PLAN VIEW
SCALE: 3" = 1'-0"

*NOTE:
DIMENSION INCLUDES A 1/16" TOLERANCE AN THE TOP AND BOTTOM OF THE FLANGE TO FACILITATE INSTALLATION.

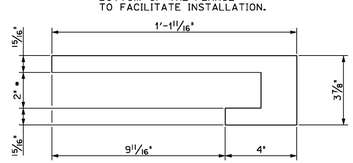

DRIP PL, PcMk "DP1"
SCALE: 3" = 1'-0"

COMPLETE BOLT SCHEDULE

NO. BOLTS	PIECE MARK	LENGTH	DESCRIPTION	LOCATION
280	FB1	3¾"	⅞"ϕ BOLT w/N&W (WEATHERING) AASHTO M164, TYPE 3	TOP FLANGE AT FIELD SPLICE
630	FB2	3"	⅞"ϕ BOLT w/N&W (WEATHERING) AASHTO M164, TYPE 3	WEB AT FIELD SPLICE
480	FB3	5¼"	⅞"ϕ BOLT w/N&W (WEATHERING) AASHTO M164, TYPE 3	BOTTOM FLANGE AT FILED SPLICE
1088	FB4	2¾"	⅞"ϕ BOLT w/N&W (WEATHERING) ASTM A325, TYPE 3	CONNECTION PLATES AT CROSS FRAMES
20	ANC	36"	2½"ϕ GR55 OR HIGHER STRENGTH SWEDGED ANCHOR ROD. THREADED 18", WITH MIN. 18" EMBEDMENT. •3 NUTS PER ANCHOR ROD.•	SOLE PLATE LOCATIONS
60	N1		2½"ϕ NUTS FOR ANCHOR ROD	SOLE PLATE LOCATIONS

BILL OF MATERIALS

SHIP	SHIP MARK	NO. PCS.	PIECE MARK	DESCRIPTION	LENGTH	WT.	MATERIAL
5	S1			PL ⅝" x 22"	3'-7"	170# EACH	CVN
10	S2			PL ⅝" x 9"	3'-7"	70# EACH	CVN
5	S3			PL 1" x 24"	4'-1"	340# EACH	CVN
10	S4			PL 1" x 10"	4'-1"	140# EACH	CVN
10	S5			PL ½" x 19"	5'-3"	175# EACH	CVN
4	DP1			PL ¼" x 3⅜"	1'-3¾"	5# EACH	
10	SP1			PL 1⅝" x 9" SOLE PLATE	1'-11"	100# EACH	
40	PW			PL ½" x 5" PLATE WASHER	5"	4# EACH	

FINISH	SSPC SP10		
MATERIAL	AASHTO M270 (ASTM A709) GRADE 50W		
HOLES	15/16" DIA. (U.N.O.)		
ELECTRODES	PER WELD PROCEDURE		
WELDS	PER WELD PROCEDURE		
SURFACE PREP	SSPC SP6		

NO	DATE	DESCRIPTION	BY
		REVISIONS	

ARC ENTERPRISES, INC.
ADVANCED RESOURCES & CONST. ENTERPRISES, INCORPORATED
P.O. BOX 120 KINGFIELD, ME. 04947
PHONE: (207) 265-2646 – FAX: (207) 265-4054

DRAFTER	DLM
DATE	OCT. 2015
CHECKED	JJH
DATE	OCT. 2015

MISCELLANEOUS DETAILS
STOWE, VT. Route 108 (Major Collector) Bridge No. 3
Project No. BRF 0235(15)
cc: CCS CONSTRUCTORS, INC.

PROJECT NO. 15-144
DWG. NO. M1

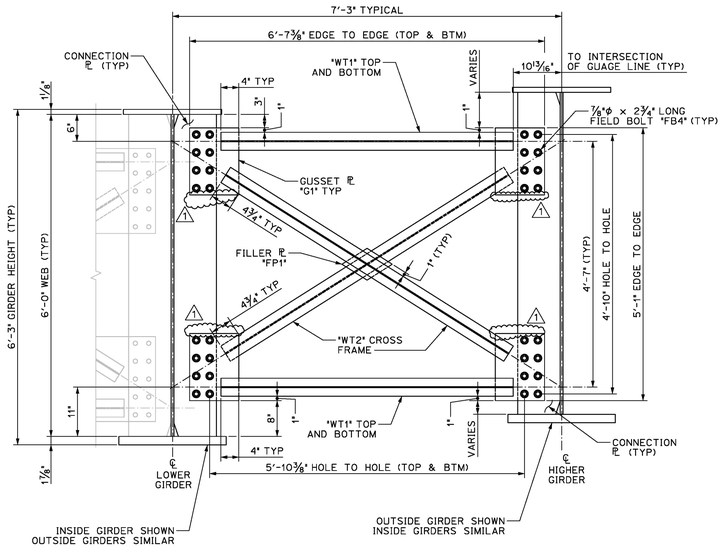

A / M2 TYPICAL CROSS FRAME DETAIL
SCALE: 3/4" = 1'-0"

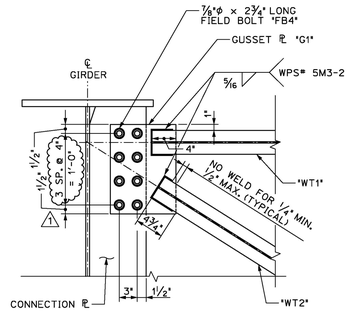

GUSSET ℄ CONNECTION DETAIL
SCALE: 1" = 1'-0"

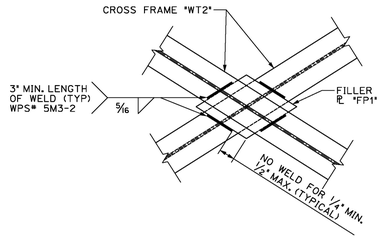

FILLER PLATE WELD DETAIL
SCALE: 1 1/2" = 1'-0"

				BILL OF MATERIALS			
SHIP	SHIP MARK	NO. PCS.	PIECE MARK	DESCRIPTION	LENGTH	WT.	MATERIAL
34	X1			CROSS FRAME		370# EACH	
		68	WT1	WT4x7.5	3'-7"	50# EACH	CVN
		68	WT2	WT4x7.5	4'-1"	50# EACH	CVN
		136	G1	℄ 5/8" x 15" (1)	11"	35# EACH (1)	
		34	FP1	℄ 5/8" x 6"	9 1/2"	10# EACH	
20	P1			7/8" x 9 1/2" BEARING STIFFENER	6'-0"	170# EACH	CVN
34	P2			5/8" x 9 1/2" CONNECTION ℄	6'-0"	125# EACH	CVN
11	P3			5/8" x 9 1/2" CONNECTION ℄	6'-0"	125# EACH	CVN
4	P4			5/8" x 9 1/2" CONNECTION ℄	6'-0"	125# EACH	CVN
3	P5			5/8" x 9 1/2" CONNECTION ℄	6'-0"	125# EACH	CVN
4	P6			5/8" x 9 1/2" CONNECTION ℄	6'-0"	125# EACH	CVN
3	P7			5/8" x 9 1/2" CONNECTION ℄	6'-0"	125# EACH	CVN
2	P8			5/8" x 9 1/2" CONNECTION ℄	6'-0"	125# EACH	CVN
4	P9			5/8" x 9 1/2" CONNECTION ℄	6'-0"	125# EACH	CVN
2	P10			5/8" x 9 1/2" CONNECTION ℄	6'-0"	125# EACH	CVN
1	P11			5/8" x 9 1/2" CONNECTION ℄	6'-0"	125# EACH	CVN

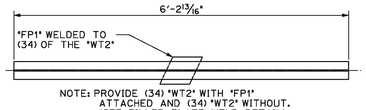

NOTE: PROVIDE (34) "WT2" WITH "FP1" ATTACHED AND (34) "WT2" WITHOUT. (SEE FILLER PLATE WELD DETAIL).

WT 4x7.5 "WT2"
SCALE: 3/4" = 1'-0"

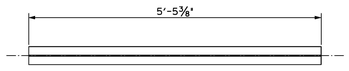

WT 4x7.5 "WT1"
SCALE: 3/4" = 1'-0"

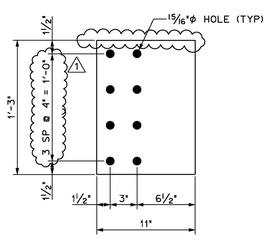

5/8" GUSSET ℄ "G1"
SCALE: 1 1/2" = 1'-0"

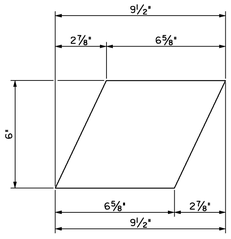

5/8" FILLER ℄ "FP1"
SCALE: 3" = 1'-0"

7/8" STIFFENER ℄, PcMk "P1"
SCALE: 1 1/2" = 1'-0" (20 REQ'D)

5/8" CONNECTION ℄, PcMk VARIES
SCALE: 1 1/2" = 1'-0"

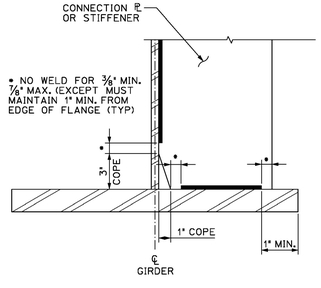

WELD TERMINATION AND COPING DETAIL
SCALE: 2" = 1'-0"

FINISH SSPC SP10				
MATERIAL AASHTO M270 (ASTM A709) GRADE 50W				
HOLES 15/16" DIA. (U.N.O.)				
ELECTRODES PER WELD PROCEDURE				
WELDS PER WELD PROCEDURE				
SURFACE PREP SSPC SP6	1	11/16/15	CHANGED GUSSET PLATE	DLM
	NO	DATE	DESCRIPTION	BY
			REVISIONS	

ARC ENTERPRISES, INC.
ADVANCED RESOURCES & CONST. ENTERPRISES, INCORPORATED
P.O. BOX 120 KINGFIELD, ME. 04947
PHONE: (207) 265-2646 – FAX: (207) 265-4054

DRAFTER DLM	MISCELLANEOUS DETAILS	PROJECT NO. 15-144
DATE OCT. 2015	STOWE, VT. Route 108 (Major Collector) Bridge No. 3 Project No. BRF 0235(15)	
CHECKED JJH	SC: CCS CONSTRUCTORS, INC.	DWG. NO. M2
DATE OCT. 2015		

American Welding Society®

AWS CERTIFIED WELDER
Welders, Brazers and Operators

John L Ellsworth

Cert # **0111012W** SSN # **XXX-XX-7074**

1-800-443-9353 Ext. 273 Information relating to identification and certification of the bearer of this card may be verified by calling or writing:
Certification Department of the American Welding Society
8669 NW 36th St., #130, Miami, FL 33166
Verification of the information on this card, including the test date and expiration date can be obtained by visiting the AWS website at *www.aws.org/certification/cw_search.html.*

VALID ONLY IF ACCOMPANIED BY PHOTO ID

American Welding Society®
CERTIFIED WELDER

This Card is the property of AWS and shall be returned on demand.

John L Ellsworth

#	Test Date	Sup	Code	Process(es)	GAS	Filler Metal	Base Metal	Pos	Thickness,Backing Thickness,Pipe;OD & Backing	Expires
1	9/28/2001	G	D1.1	SMAW	N/A	F4	P1	A	U	1/10/2016
2	12/12/2011	G	D1.1	FCAW	75/25	E71T-1	A36	ALL	UNLIMITED	1/10/2016
3	12/12/2011	G	D1.5	SMAW	N/A	E7018	M1	ALL	UNLIMITED	1/10/2016

Welding Procedure Specification

Material specification A572 GRADE 50
Welding process SMAW
Manual or machine MANUAL
Position of welding HORIZONTAL & VERTICAL
Filler metal specification AWS A5.1
Filler metal classification E7018
Flux
Shielding gas N/A Flow rate
Single or multiple pass SINGLE
Single or multiple arc SINGLE
Welding current AC/DC
Polarity DCEP
Welding progression STINGER
Root treatment CLEAN TO REMOVE ALL CONTAMINANTS
Preheat and interpass temperature PRE-HEAT AS NEEDED
Postheat treatment

WELDING PROCEDURE

Pass no.	Electrode size	Welding current		Travel speed	Joint detail
		Amperes	Volts		
	1/8"	60-140	7-10	VARIES	PILE TIP & SPLICE CONNECTION 5/16" PILE FLANGE WELD 5/16" (TYP)

This procedure may vary due to fabrication sequence, fit-up, pass size, etc., within the limitation of variables given in Section 5. **(of the AASHTO/AWS D1.5 Bridge Welding Code and latest revision)**

Procedure no.
Revision no.
Welder
Contractor CCS CONSTRUCTORS, INC
Authorized by
Date 12/30/15

Pile tip detail

- Pile Tips shall be welded onto piles per the specifications of the Manufacturer. These can be welded in the field or in a fabrication plant, however in either case, pre-approval is required for procedures and welder/fabricator by the Agency's Shop Inspector. Piles that arrive to the construction site with tips welded to them without pre-approved procedures/welders are rejectable.

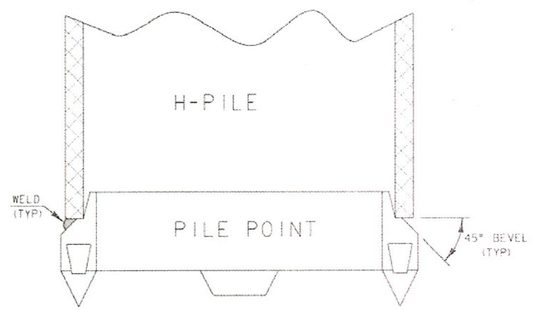

NOTES:

H-PILE SHALL HAVE A SQUARE CUT END FOR THE PILE POINT TO FIT ON TO.

PILE POINT SHALL BE WELDED IN EITHER THE FLAT OF VERTICAL POSITION USING 70XX OR 60XX ELECTRODES.

WELD ACROSS THE FULL WIDTH OF BOTH FLANGES WHILE MAINTAINING THE MINIMUM WELD SIZE ACCORDING TO THE CHART BELOW.

Pile Size	Flange Thickness	Min. Size Groove Weld*
HP 14 x 117	0.805	7/16
HP 14 x 102	0.705	3/8
HP 14 x 89	0.615	3/8
HP 14 x 73	0.505	5/16
HP 12 x 84	0.685	3/8
HP 12 x 74	0.610	3/8
HP 12 x 63	0.515	5/16
HP 12 x 53	0.435	5/16
HP 10 x 57	0.565	5/16
HP 10 x 42	0.420	5/16
HP 8 x 36	0.445	5/16

* UNLESS OTHERWISE SPECIFIED BY THE MANUFACTURER.



Pile Point

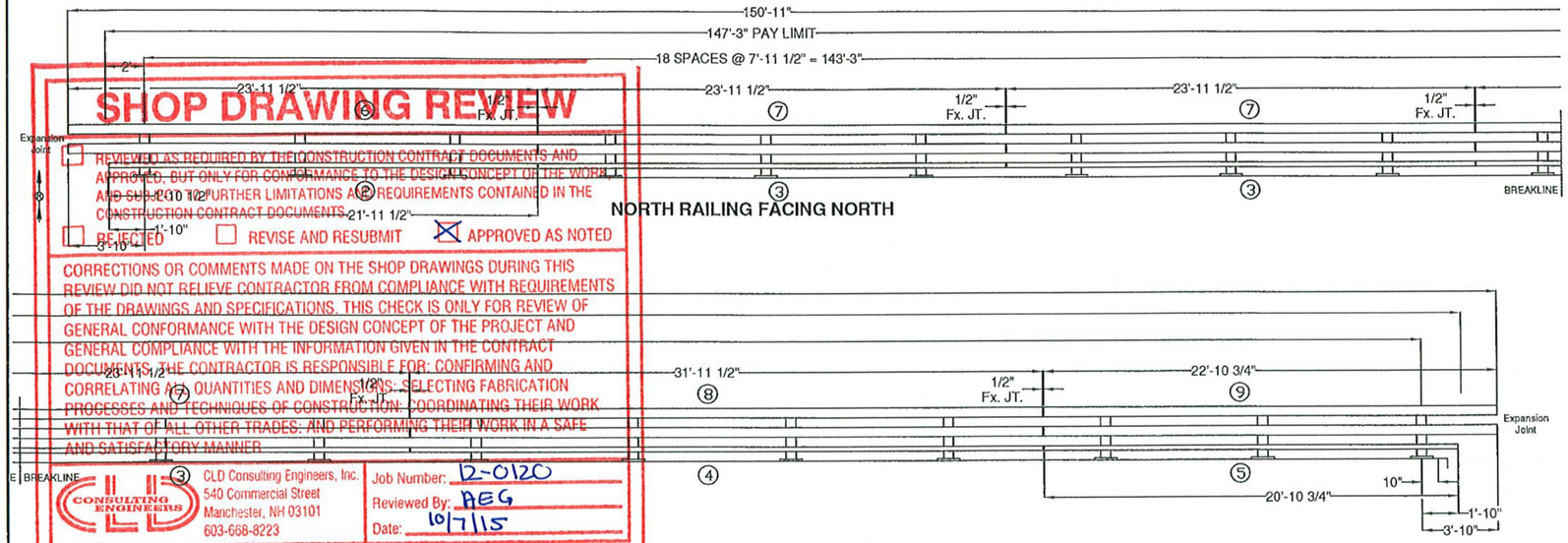

SHOP DRAWING REVIEW

REVIEWED AS REQUIRED BY THE CONSTRUCTION CONTRACT DOCUMENTS AND APPROVED, BUT ONLY FOR CONFORMANCE TO THE DESIGN CONCEPT OF THE WORK AND SUBJECT TO FURTHER LIMITATIONS AND REQUIREMENTS CONTAINED IN THE CONSTRUCTION CONTRACT DOCUMENTS.

☐ REJECTED ☐ REVISE AND RESUBMIT ☒ APPROVED AS NOTED

CORRECTIONS OR COMMENTS MADE ON THE SHOP DRAWINGS DURING THIS REVIEW DID NOT RELIEVE CONTRACTOR FROM COMPLIANCE WITH REQUIREMENTS OF THE DRAWINGS AND SPECIFICATIONS. THIS CHECK IS ONLY FOR REVIEW OF GENERAL CONFORMANCE WITH THE DESIGN CONCEPT OF THE PROJECT AND GENERAL COMPLIANCE WITH THE INFORMATION GIVEN IN THE CONTRACT DOCUMENTS. THE CONTRACTOR IS RESPONSIBLE FOR: CONFIRMING AND CORRELATING ALL QUANTITIES AND DIMENSIONS; SELECTING FABRICATION PROCESSES AND TECHNIQUES OF CONSTRUCTION; COORDINATING THEIR WORK WITH THAT OF ALL OTHER TRADES; AND PERFORMING THEIR WORK IN A SAFE AND SATISFACTORY MANNER.

CLD Consulting Engineers, Inc.
540 Commercial Street
Manchester, NH 03101
603-668-8223

Job Number: 12-0120
Reviewed By: AEG
Date: 10/7/15

GENERAL NOTES:

1) ALL RAILING IS TO BE FABRICATED AND ERECTED ACCORDING TO SECTION 525 OF THE STANDARD SPECIFICATIONS.
2) PRIOR TO GALVANIZING THE ASSEMBLED POST, GRIND ALL EDGES TO A MINIMUM RADIUS OF 1/16".
3) ALL POST SHALL BE SET NORMAL TO GRADE. THE MAXIMUM CENTER TO CENTER SPACING OF BRIDGE RAIL POST IS 8' 3".
4) SECTIONS OF RAIL TUBE SHALL BE ATTACHED TO A MINIMUM OF TWO BRIDGE POSTS AND PREFERABLY TO AT LEAST 4 POSTS.
5) RAIL TUBE EXPANSION JOINTS SHALL BE PROVIDED IN ANY RAIL BAY SPANNING THE END OF AN INTEGRAL ABUTMENT BRIDGE AND AT ALL SUPER STRUCTURE EXPANSION JOINTS. EXPANSION JOINT WIDTH SHALL BE 4"@ 68°F AND WILL BE ADJUSTED IN THE FIELD BY THE ENGINEER FOR OTHER TEMPERATURES.
6) STD. SPLICE HOLES ONLY IN BRIDGE RAIL TUBES. REST TO BE DRILLED BY CUSTOMER. FIELD DRILLED HOLES TO BE COATED WITH AN APPROVED ZINC-RICH PAINT PRIOR TO INSTALLATION.
7) BOLTS SHALL BE TORQUED SNUG TIGHT (APPROXIMATELY 100 FT-LB).
8) SEE STANDARD DRAWING G-1 FOR DETAILS OF DELINEATORS. A DELINEATOR SHALL BE INSTALLED AT 30 FOOT SPACING OR THE NEAREST POST. WHITE IS TO BE INSTALLED ON THE DRIVER'S RIGHT. FOR ONE WAY BRIDGES, YELLOW IS TO BE INSTALLED ON THE DRIVER'S LEFT. PAYMENT FOR DELINEATORS SHALL BE INCIDENTAL TO OTHER ITEMS.
9) ANY BENDING OF RAIL SHALL BE DONE AT THE FABRICATION PLANT ACCORDING TO A PROCEDURE PROVIDED BY THE FABRICATOR.
10) THE MINIMUM DISTANCE FROM THE POST TO AN EXPANSION JOINT SHALL BE DETERMINED BY THE MINIMUM EDGE DISTANCE OF 5" FROM ANY ANCHOR STUD TO THE END OF THE SLAB, OR THE EXPANSION JOINT RECESS POUR, IF ONE IS USED.
11) PROTRUSIONS CAUSED BY WELDING OR GALVANIZING ARE NOT PERMITTED ON THE ADJOINING SURFACES OF THE BOX BEAM RAILS, SPLICE TUBES AND FILL PLATES.
12) THIS RAILING MEETS THE REQUIREMENTS FOR A TL-4 SERVICE LEVEL.

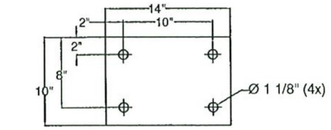

1/8" FABRIC PAD

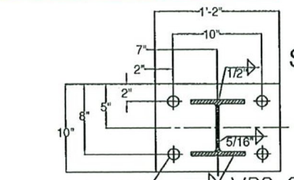

SECTION A-A

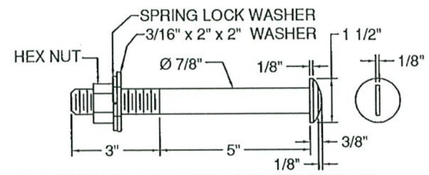

SLOTTED ROUND HEAD BOLT

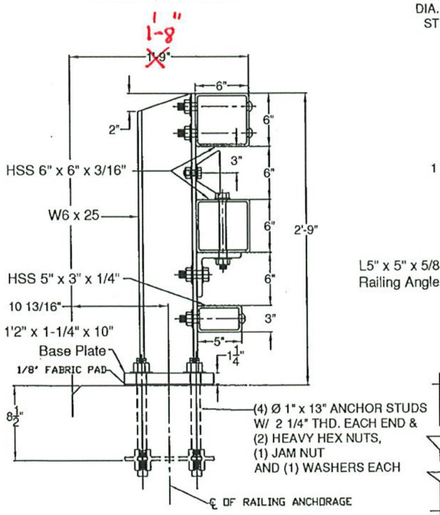

SECTION

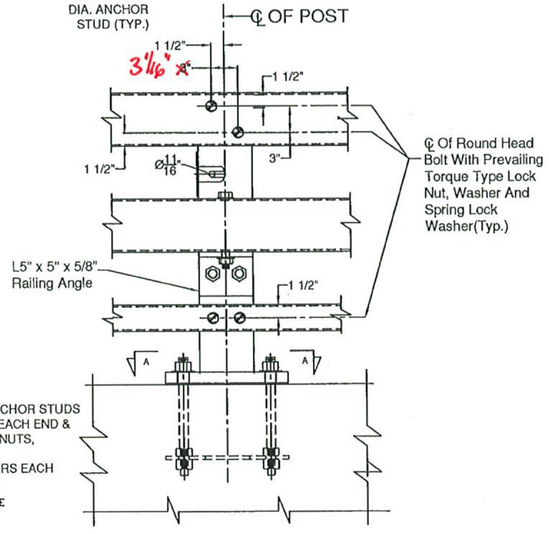

ELEVATION

STEEL BRIDGE RAILING

BRIDGE POST DETAIL

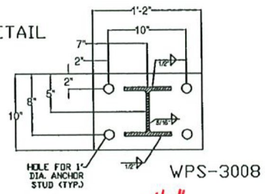

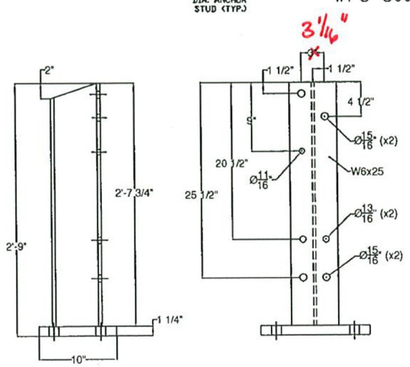

BILL OF MATERIAL - NORTH

ITEM #	QTY	PART #	DESCRIPTION	ASTM DESIGNATION
1	19	0033.03610	W6x25, THREE RAIL POST @ 2'-9" OA ON 1 1/4x10x1'-2" B.P.	A572 Gr. 50
2	1	0033.22200	HSS 3" X 5" X 1/4" RAIL @ 21'-11 1/2" (EXP)	A500 Gr. B
3	3	0033.12400	HSS 3" X 5" X 1/4" RAIL @ 23'-11 1/2"	A500 Gr. B
4	1	0033.13200	HSS 3" X 5" X 1/4" RAIL @ 31'-11 1/2"	A500 Gr. B
5	1	0033.22003	HSS 3" X 5" X 1/4" RAIL @ 20'-10 3/4" (EXP)	A500 Gr. B
6	2	0033.62400	HSS 6" X 6" X 3/16" RAIL @ 23'-11 1/2" (EXP)	A500 Gr. B
7	6	0033.52400	HSS 6" X 6" X 3/16" RAIL @ 23'-11 1/2"	A500 Gr. B
8	2	0033.53200	HSS 6" X 6" X 3/16" RAIL @ 31'-11 1/2"	A500 Gr. B
9	2	0033.62211	HSS 6" X 6" X 3/16" RAIL @ 22'-10 3/4" (EXP)	A500 Gr. B
10	5	0033.00840	2-1/8" X 4-1/4" FIX. SPLICE BAR @ 2'-3"	A572 Gr. 50
11	10	0033.00640	HSS 5" X 5" X 5/16" FIX. SPLICE TUBE @ 2'-3"	A500 Gr. B, A572 Gr. 50
12	19	0033.00220	3/8" X 10" X 14" ANCHOR PLATES	A572 Gr. 50
13	19	0033.90050	1/8" X 10" X 14" FABRIC PAD	AASHTO M251
14	78*	0042.21013	Ø 1" X 13" ANCHOR STUDS, W/ 2 1/4" THD. EACH END	A449
15	154*	0080.18901	Ø 1" HEAVY HEX NUTS	A563 DH
16	76	0080.18911	Ø 1" FLAT WASHERS	F436
17	76	0080.18905	Ø 1" HEX JAM NUTS	A563 DH
18	76	0080.07500	Ø 7/8" X 8" ROUND HEAD BOLT, NUT, SQ. WASHER, L.W.	A449, A563 DH, F436, ASME D18.2
19	19	0080.06400	Ø 3/4" X 8" HEX BOLT, NUT, (2) F.W., & L.W.	A325, A563 DH, F436, & ASME D18.2
20	38	0080.06140	Ø 3/4" X 2-3/4" HEX BOLT, NUT, (2) F.W., & L.W.	A325, A563 DH, F436, & ASME D18.2
21	40	0080.06340	Ø 3/4" X 7-1/2" HEX BOLT, NUT, & (2) F.W.	A325, A563 DH, & F436
22	20	0080.06255	Ø 3/4" X 4-1/2" HEX BOLT, NUT, & (2) F.W.	A325, A563 DH, & F436
23	19	0033.00500	L5" X 5" X 5/8" RAILING ANGLE @ 6'	A572 Gr. 50
24	5		DELINEATORS - NOT SHOWN	(SUPPLIED BY CUSTOMER)

*-2 EXTRA FOR VOAT TESTING

ITEM #: 525.335

STRUCTURAL STEEL TO COMPLY W/ ASTM A6

TOLERANCE UNLESS OTHERWISE NOTED:
FRACTIONS = ± 1/16"
ANGLES = ± 1/2°
DIAMETERS = ± 1/32"

SHEET 1 OF 3

BRIDGE RAIL DETAILS SHEET

VT ROUTE 108 (MAJOR COLLECTOR), BRIDGE # 3
TOWN OF STOWE, COUNTY OF LAMOILLE, VT.

R/E/V	NO.	DATE	DESCRIPTION	BY

R/E/V	NO.	DATE	DESCRIPTION	BY

ELDERLEE, INC.
OAKS CORNERS, NEW YORK 14518
email: dlong@elderlee.com / epeck@elderlee.com
Tel: 315-789-6670 Fax: 315-789-6615

AISC CERTIFIED FABRICATOR

ORTHOGRAPHIC PROJECTION

DRAWN	E.P.	9/1/15
CHECKED	D.L.	9/1/15
APPROVED	.	.
SCALE	SCHEMATIC	

DRAWING NO. F.R.L.-STOWE BRF 0235 (15)

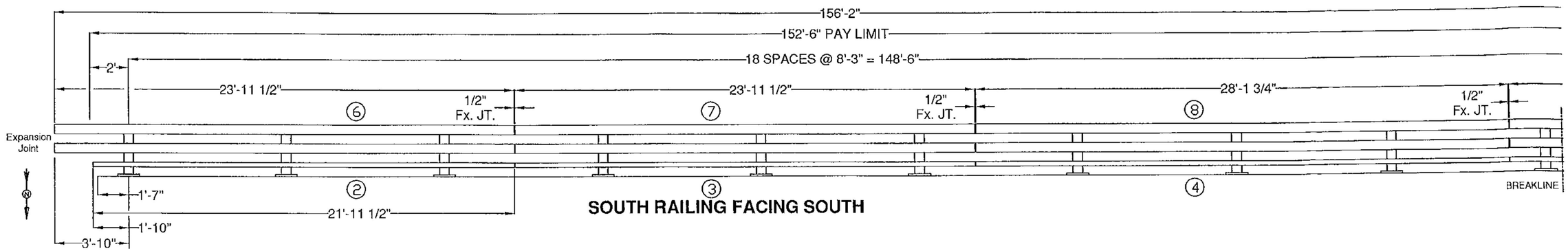

SOUTH RAILING FACING SOUTH

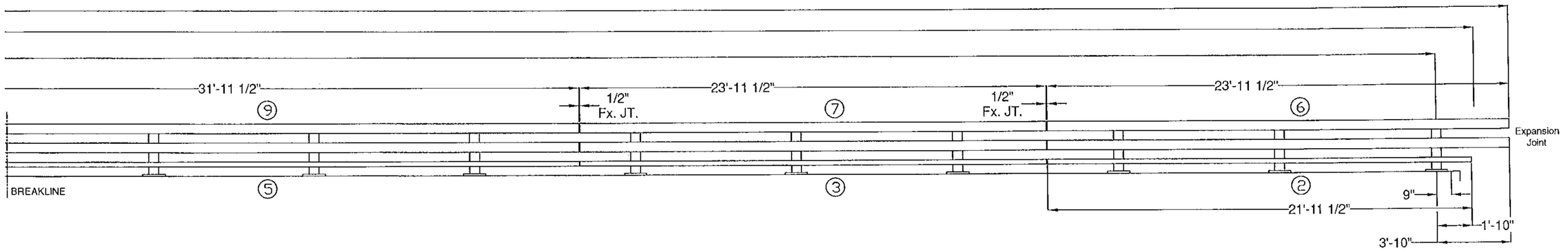

BILL OF MATERIAL - SOUTH				
ITEM #	QTY	PART #	DESCRIPTION	ASTM DESIGNATION
1	19	0033.03610	W6x25, THREE RAIL POST @ 2'-9" OA ON 1 1/4x10x1'-2" B.P.	A572 Gr. 50
2	2	0033.22200	HSS 3" X 5" X 1/4" RAIL @ 21'-11 1/2" (EXP)	A500 Gr. B
3	2	0033.12400	HSS 3" X 5" X 1/4" RAIL @ 23'-11 1/2"	A500 Gr. B
4	1	0033.128011	HSS 3" X 5" X 1/4" RAIL @ 28'-1 3/4"	A500 Gr. B
5	1	0033.23200	HSS 3" X 5" X 1/4" RAIL @ 31'-11 1/2" (EXP)	A500 Gr. B
6	4	0033.62400	HSS 6" X 6" X 3/16" RAIL @ 23'-11 1/2" (EXP)	A500 Gr. B
7	4	0033.52400	HSS 6" X 6" X 3/16" RAIL @ 23'-11 1/2"	A500 Gr. B
8	2	0033.528011	HSS 6" X 6" X 3/16" RAIL @ 28'-1 3/4"	A500 Gr. B
9	2	0033.53200	HSS 6" X 6" X 3/16" RAIL @ 31'-11 1/2"	A500 Gr. B
10	5	0033.00840	2-1/8" X 4-1/4" FIX. SPLICE BAR @ 2'-3"	A572 Gr. 50
11	10	0033.00640	HSS 5" X 5" X 5/16" FIX. SPLICE TUBE @ 2'-3"	A500 Gr. B, A572 Gr. 50
12	19	0033.00220	3/8" X 10" X 14" ANCHOR PLATES	A572 Gr. 50
13	19	0033.90050	1/8" X 10" X 14" FABRIC PAD	AASHTO M251
14	76	0042.21013	ø 1" X 13" ANCHOR STUDS, W/ 2 1/4" THD. EACH END	A449
15	152	0080.18901	ø 1" HEAVY HEX NUTS	A563 DH
16	76	0080.18911	ø 1" FLAT WASHERS	F436
17	76	0080.18905	ø 1" HEX JAM NUTS	A563 DH
18	76	0080.07500	ø 7/8" X 8" ROUND HEAD BOLT, NUT, SQ. WASHER, L.W.	A449, A563 DH, F436, ASME D18.2
19	19	0080.06400	ø 3/4" X 8" HEX BOLT, NUT, (2) F.W., & L.W.	A325, A563 DH, F436, & ASME D18.2
20	38	0080.06140	ø 3/4" X 2-3/4" HEX BOLT, NUT, (2) F.W., & L.W.	A325, A563 DH, F436, & ASME D18.2
21	40	0080.06340	ø 3/4" X 7-1/2" HEX BOLT, NUT, & (2) F.W.	A325, A563 DH, & F436
22	20	0080.06255	ø 3/4" X 4-1/2" HEX BOLT, NUT, & (2) F.W.	A325, A563 DH, & F436
23	19	0033.00500	L5" X 5" X 5/8" RAILING ANGLE @ 6"	A572 Gr. 50
24	5		DELINEATORS - NOT SHOWN	(SUPPLIED BY CUSTOMER)

ITEM #: 525.335

SHEET 2 OF 3

STRUCTURAL STEEL TO COMPLY W/ ASTM A6

TOLERANCE UNLESS OTHERWISE NOTED:
FRACTIONS = ± 1/16"
ANGLES = ± 1/2°
DIAMETERS = ± 1/32"

BRIDGE RAIL DETAILS SHEET

VT ROUTE 108 (MAJOR COLLECTOR), BRIDGE # 3
TOWN OF STOWE, COUNTY OF LAMOILLE, VT.

R E V	NO.	DATE	DESCRIPTION	BY	R E V	NO.	DATE	DESCRIPTION	BY

ELDERLEE, INC.
OAKS CORNERS, NEW YORK 14518
email: dlong@elderlee.com / spesk@elderlee.com
Tel: 315-789-6670 Fax: 315-789-6615

AISC CERTIFIED FABRICATOR

ORTHOGRAPHIC PROJECTION

DRAWN	E.P.	9/1/15
CHECKED	D.L.	9/1/15
APPROVED	.	.
SCALE	SCHEMATIC	

DRAWING NO. F.R.L.-STOWE BRF 0235 (15)

SPLICE BAR - FIXED

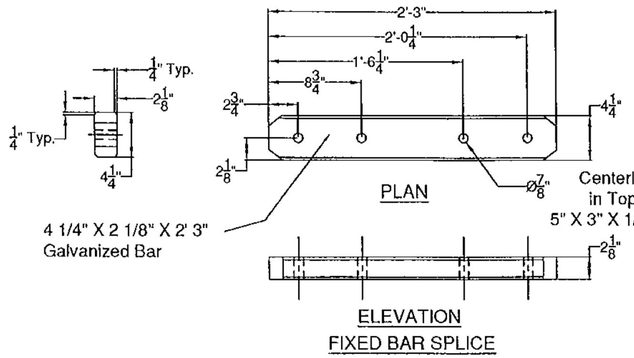

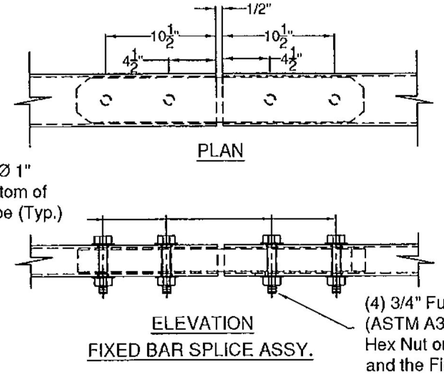

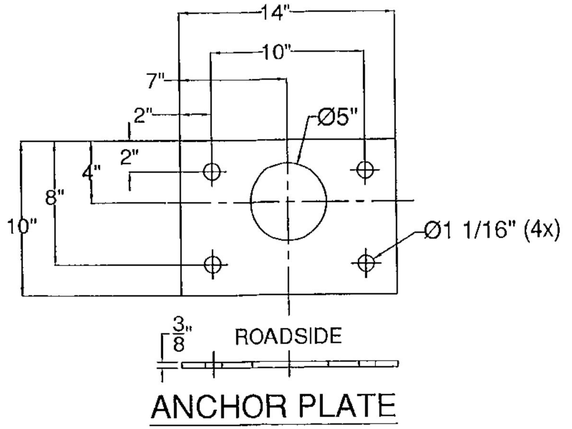

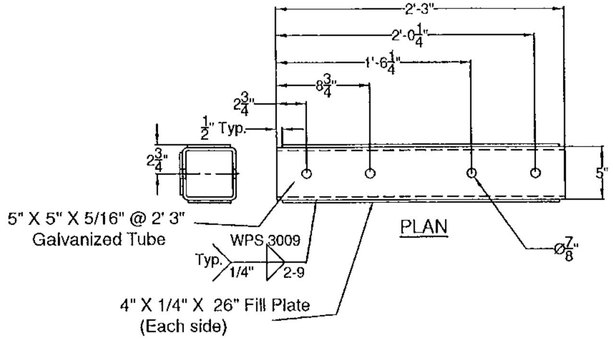

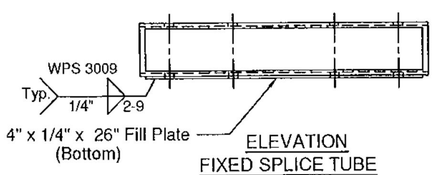

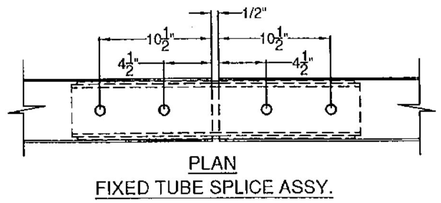

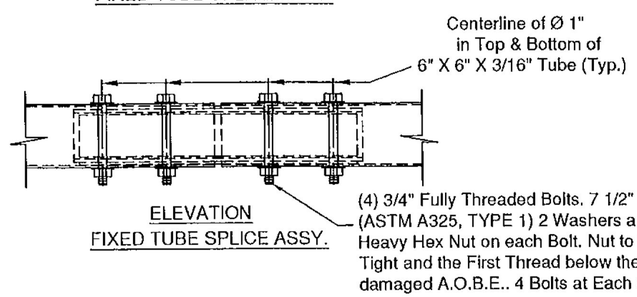

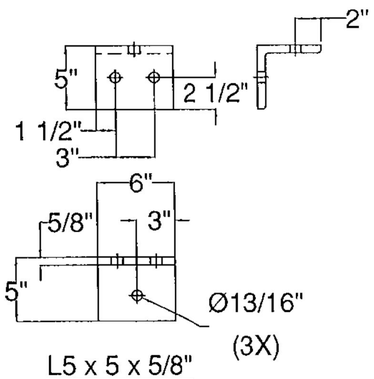

SPLICE TUBE - FIXED

ITEM #: 525.335

STRUCTURAL STEEL TO COMPLY W/ ASTM A6

TOLERANCE UNLESS OTHERWISE NOTED:
FRACTIONS = ± 1/16"
ANGLES = ± 1/2°
DIAMETERS = ± 1/32"

SHEET 3 OF 3

BRIDGE RAIL DETAILS SHEET

VT ROUTE 108 (MAJOR COLLECTOR), BRIDGE # 3
TOWN OF STOWE, COUNTY OF LAMOILLE, VT.

R E V	NO.	DATE	DESCRIPTION	BY	R E V	NO.	DATE	DESCRIPTION	BY

ELDERLEE, INC.
OAKS CORNERS, NEW YORK 14518
email:dlong@elderlee.com / epeek@elderlee.com
Tel:315-789-6670 Fax:315-789-6615

AISC CERTIFIED FABRICATOR
ORTHOGRAPHIC PROJECTION

DRAWN	E.P.	9/1/15
CHECKED	D.L.	9/1/15
APPROVED		
SCALE	SCHEMATIC	
DRAWING NO.	F.R.L.-STOWE BRF 0235 (15)	

WELDING PROCEDURE SPECIFICATION

PQR ELDERLEE#1

Material Specification	A572 GRD. 50 /A992-06a		
Welding Process	FCAW		
Manual or Machine	SEMAUTOMATIC		
Position of Welding	FLAT/HORIZONTAL		
Filler Metal Specification	A5.20		
Filler Metal Classification	E70 LINCOLN OUTERSHEILD		
Flux	N/A		
Shielding Gas	CO 2	Dew Point -40DEG F	Flow Rate 50 CFM (45 TO 63 CFM)
Single or Multiple Pass	SINGLE		
Single or Multiple Arc	N/A		
Welding Current	DC		
Polarity	DCEP		
Welding Progression	STRINGER		
Root Treatment	PER D1.5		
Preheat and Interpass Temperature	PER D1.5		
Postheat Temperature	NONE		
Heat Input	Min	Max	

WELDING PROCEDURE

Pass no.	Electrode size	Welding Current Amperes	Welding Current Volts	Travel speed	Joint detail
1	3/32	390	27	12	
Variable	LIMITS	351 TO 429	25 TO 29	11 TO 13	

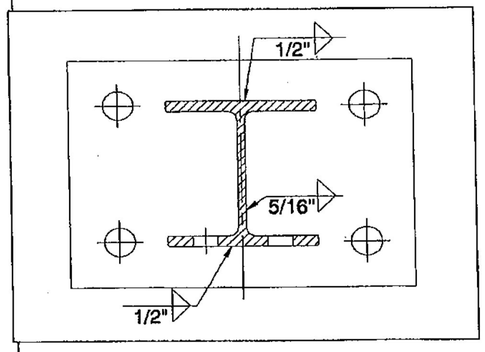

This procedure may vary due to fabrication sequence, fit-up, pass size, etc., within the limitation of variables given in Section 5.

Procedure No. 3008

Revision No.

Contractor Elderlee, Inc.

Authorized By RANDY SCOTT

Date 5/29/2013

WELDING PROCEDURE SPECIFICATION

PQR ELDERLEE #3

Material Specification	A709 TO A500 GR B
Welding Process	FCAW-G
Manual or Machine	SEMAUTOMATIC
Position of Welding	FLAT/HORIZONTAL
Filler Metal Specification	A5.29
Filler Metal Classification	E81T1-Ni1C-JH4
Flux	N/A
Shielding Gas	CO 2 Dew Point -40DEG F Flow Rate 50CFH
Single or Multiple Pass	SINGLE
Single or Multiple Arc	SINGLE
Welding Current	DC
Polarity	REVERSE ELECTRODE POSITIVE
Welding Progression	STRINGER
Root Treatment	D1.5
Preheat and Interpass Temperature	D1.5
Postheat Temperature	NONE
Heat Input	Min _____ Max _____

WELDING PROCEDURE

Pass no.	Electrode size	Welding Current Amperes	Welding Current Volts	Travel speed	Joint detail
1	1/16	310	25	11	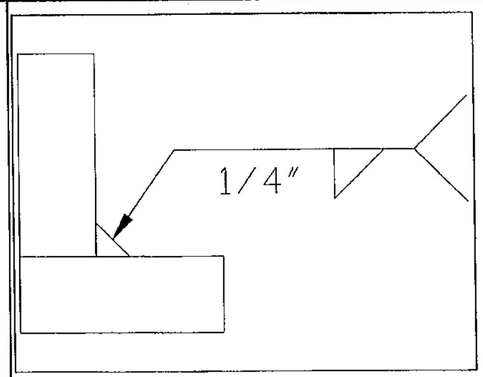
Variable	LIMITS	341 TO 269	27 TO 23	12 TO 10	

This procedure may vary due to fabrication sequence, fit-up, pass size, etc., within the limitation of variables given in Section 5.

Procedure No. 3009

Revision No. _____

Contractor Elderlee, Inc.

Authorized By RANDY SCOTT

Date 3/20/2014

32' - PAY LIMIT FOR TRANSITION - BRIDGE RAILING TO BOX BEAM GUIDE RAIL

ELEVATION VIEW

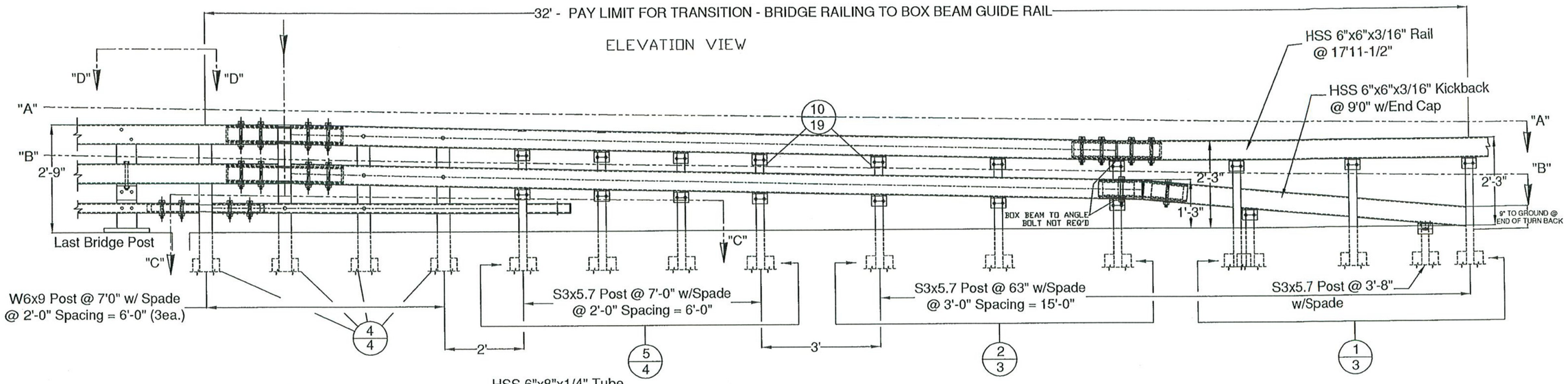

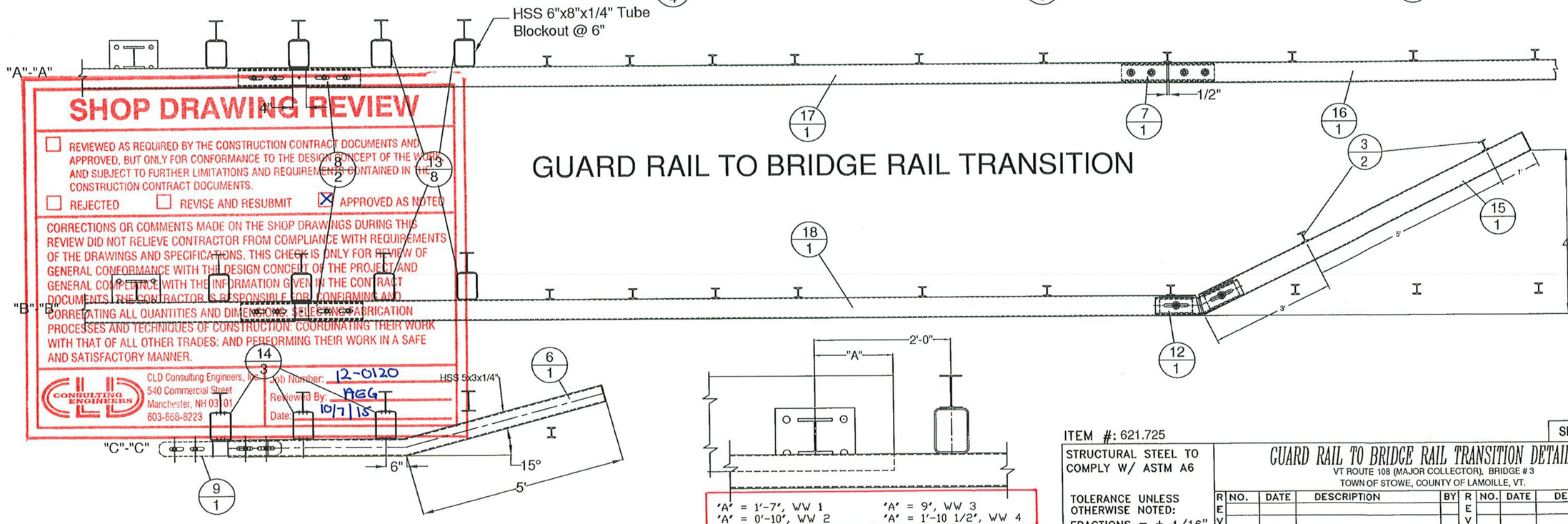

VIEW "D"-"D"

please note that these dimensions are measured at the front face of the rail

GUARD RAIL TO BRIDGE RAIL TRANSITION

SHOP DRAWING REVIEW

☐ REVIEWED AS REQUIRED BY THE CONSTRUCTION CONTRACT DOCUMENTS AND APPROVED, BUT ONLY FOR CONFORMANCE TO THE DESIGN CONCEPT OF THE WORK AND SUBJECT TO FURTHER LIMITATIONS AND REQUIREMENTS CONTAINED IN THE CONSTRUCTION CONTRACT DOCUMENTS.

☐ REJECTED ☐ REVISE AND RESUBMIT ☒ APPROVED AS NOTED

CORRECTIONS OR COMMENTS MADE ON THE SHOP DRAWINGS DURING THIS REVIEW DID NOT RELIEVE CONTRACTOR FROM COMPLIANCE WITH REQUIREMENTS OF THE DRAWINGS AND SPECIFICATIONS. THIS CHECK IS ONLY FOR REVIEW OF GENERAL CONFORMANCE WITH THE DESIGN CONCEPT OF THE PROJECT AND GENERAL COMPLIANCE WITH THE INFORMATION GIVEN IN THE CONTRACT DOCUMENTS. THE CONTRACTOR IS RESPONSIBLE FOR CONFIRMING AND CORRELATING ALL QUANTITIES AND DIMENSIONS, SELECTING FABRICATION PROCESSES AND TECHNIQUES OF CONSTRUCTION, COORDINATING THEIR WORK WITH THAT OF ALL OTHER TRADES, AND PERFORMING THEIR WORK IN A SAFE AND SATISFACTORY MANNER.

CLD Consulting Engineers, Inc.
540 Commercial Street
Manchester, NH 03101
603-668-8223

Job Number: 12-0120
Reviewed By: AEG
Date: 10/7/15

ITEM #: 621.725

STRUCTURAL STEEL TO COMPLY W/ ASTM A6

TOLERANCE UNLESS OTHERWISE NOTED:
FRACTIONS = ± 1/16"
ANGLES = ± 1/2°
DIAMETERS = ± 1/32"

SHEET 1 OF 5

GUARD RAIL TO BRIDGE RAIL TRANSITION DETAILS SHEET

VT ROUTE 108 (MAJOR COLLECTOR), BRIDGE # 3
TOWN OF STOWE, COUNTY OF LAMOILLE, VT.

REV	NO.	DATE	DESCRIPTION	BY

REV	NO.	DATE	DESCRIPTION	BY

ELDERLEE, INC.
OAKS CORNERS, NEW YORK 14518
email: dlong@elderlee.com / epeek@elderlee.com
Tel: 315-789-6670 Fax: 315-789-6616

CERTIFIED FABRICATOR

ORTHOGRAPHIC PROJECTION

DRAWN	E.P.	9/1/15
CHECKED	D.L.	9/1/15
APPROVED	.	.
SCALE	SCHEMATIC	
DRAWING NO.	F.R.L.-STOWE BRF 0235 (15)	

PLAN VIEW

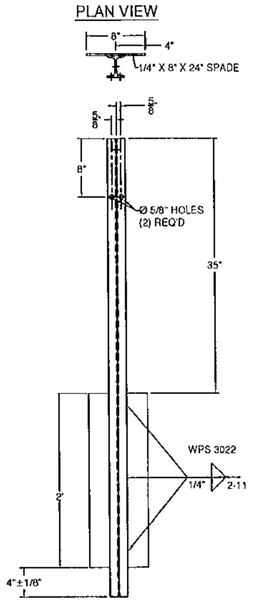

FRONT

STANDARD POST DETAIL
(POST #12)

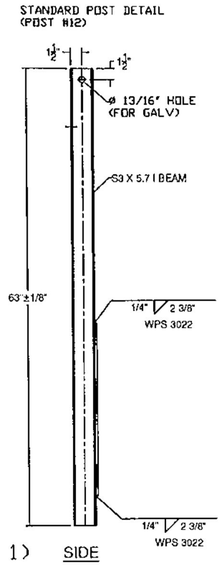

(ITEM # 1)

SIDE

PLAN VIEW

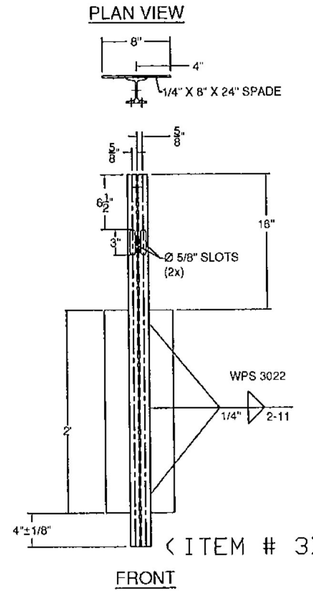

FRONT

(ITEM # 3)

END POST DETAIL

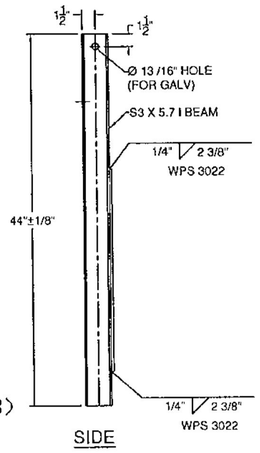

SIDE

PLAN VIEW

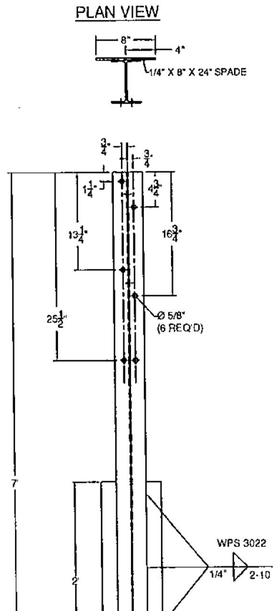

FRONT

(ITEM # 4)

HEAVY POST DETAIL
(POST #1 ~ 4)

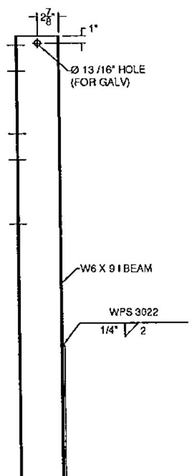

SIDE

PLAN VIEW

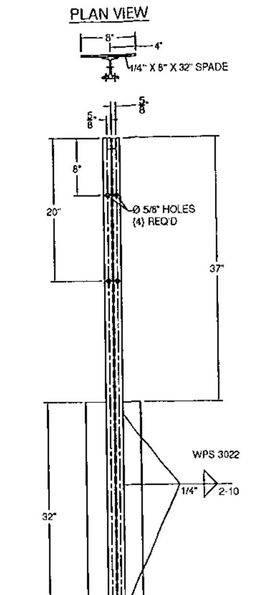

(ITEM # 5)

FRONT

TRANSITION POST DETAIL
(POST #5 ~ 8)

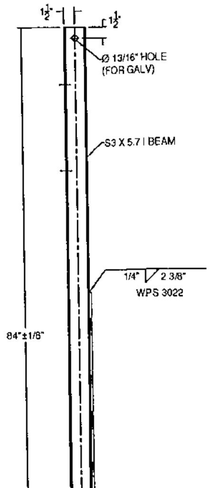

SIDE

GENERAL NOTES:

1) ALL RAILING IS TO BE FABRICATED AND ERECTED ACCORDING TO SECTION 525 OF THE STANDARD SPECIFICATIONS.
2) BOLTS SHALL BE TORQUED SNUG TIGHT (APPROXIMATELY 100 FT-LB).
3) PROTRUSIONS CAUSED BY WELDING OR GALVANIZING ARE NOT PERMITTED ON THE ADJOINING SURFACES OF THE BOX BEAM RAILS, SPLICE TUBES AND FILL PLATES.
4) BOX BEAM TUBE AND STEEL POST MATERIALS, DIMENSION SIZES AND NOTES SHALL BE THE SAME AS THOSE OF THE BRIDGE RAIL, UNLESS OTHERWISE NOTED.
5) ANY BENDING OF RAIL SHALL BE DONE AT THE FABRICATION PLANT. RADII GREATER THAN 16' TO BE CURVED ON A TUBE BENDING MACHINE, RADII EQUAL OR LESS THAN 16' TO BE "PIE CUT" AND WELDED. CURVED RAILING WIIL HAVE AN 18" LENGTH ON EACH END STRAIGHT TO ACCOMADATE SPLICES. "PIE CUTS ARE LOCATED SO AS TO NOT CONFLICT WITH POST FASTENING HOLES. PIE CUTS WILL BE WELDED ACCORDING TO PROCEDURE WPS-3026.

PLAN VIEW

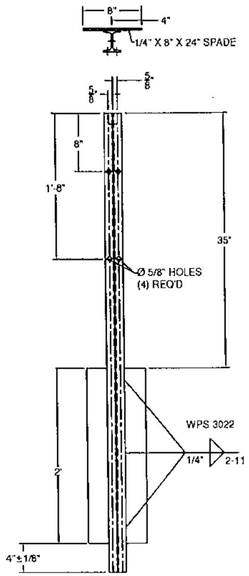

FRONT

(ITEM # 2)

TRANSITION STANDARD
POST DETAIL
(POST #9 ~ 11)

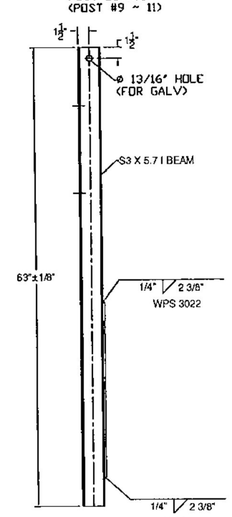

SIDE

BILL OF MATERIALS (EACH CORNER)

ITEM #	QTY.	COMPONENT #	DESCRIPTION	MATERIAL (ASTM)
1	3	0013.57021	S3 X 5.7 POST, PUNCH 8' W/SPD @ 63" LG	ASTM A572 Gr. 50
2	3	0013.57025	S3 X 5.7 POST, PUNCH 8', & 20' W/SPD @ 63" LG	ASTM A572 Gr. 50
3	2	0013.57060	S3 X 5.7 END POST W/SPD @ 3'-8" LG	ASTM A572 Gr. 50
4	4	0013.09001	W6 X 9 POST @ 7' W/SPD & 5/8" HOLES	ASTM A572 Gr. 50
5	4	0013.57010	S3 X 5.7 POST, PUNCH 8' & 20', W/8X32" SPADE @7'	ASTM A572 Gr. 50
6	1	0033.80403	3 X 5' BTM TRANS RAIL W/5'-0" KB, EXP END	A500 Gr. B
7	1	0033.00640	HSS 5X5 TUBE SPLICE @27" LG W/ 1/4" SHIMS	A500 Gr. B / A572 Gr 50
8	2	0033.00730	HSS 5x5 EXP TUBE SPLICE @ 36" LG W/ 1/4" SHIMS	A500 Gr. B / A572 Gr 50
9	1	0033.00930	BR EXP BAR SPLICE 2-1/8" X 4-1/4" @ 36" LG	ASTM A36
10	19	0054.00050	REG BB SHELF ANGLES @ 4-1/2"	ASTM A36
12	1	0054.00074	HSS 5 X 5 X 5/16" DBL BEND TUBE SPL @ 27" LG,	A500 Gr. B / A572 Gr 50
13	8	0054.00563	6 X 8 X 1/4" TRANS. TUBE B/O @ 6" LG	A500 Gr. B
14	3	0054.00565	6 X 8 X 1/4" TRANS. TUBE B/O @ 3" LG	A500 Gr. B
15	1	0054.09000	6 X 6 x 3/16" BB @ 9'-0" KICKBACK, W/ CAP, & 13° MITER	A500 Gr. B / A36
16	1/2	0054.18000	6 X 6 x 3/16" BB @ 17'-11 1/2" (9'-0" THIS PAY ITEM), DRILL 3' CC	A500 Gr. B
17	1	0054.90092	6 X 6 x 3/16" BB TOP TRANS @ 20'-9 5/8" LG W/EXP END	A500 Gr. B
18	1	0054.90093	6 X 6 x 3/16" BB BTM TRANS @ 21'-4 5/8" LG W/EXP END	A500 Gr. B
19	18	0080.03355	3/8" X 7 1/2" BOLT, NUT, & 2 FW	A307, A563 DH, F436
20	19	0080.04100	1/2" x 1-1/2" BOLT, NUT, & FW	A307, A563 DH, F436
21	22	0080.04120	1/2" x 1-1/2" BOLT, NUT, 2 FW & LW	A307, A563 DH, F436
22	4	0080.06255	3/4" X 4-1/2" BOLT, NUT, 2 FW	A325, A563 DH, F436
23	12	0080.06340	3/4" X 7-1/2" BOLT, NUT, 2 FW	A325, A563 DH, F436
24	6	0080.06370	3/4" X 8" CARR BOLT, NUT, FW & LW	A307, A563 DH, F436
25	2	0080.06400	3/4" X 8" BOLT, NUT, 2 FW, & LW	A325, A563 DH, F436

HARDWARE NOTES

ITEM #	FUNCTION
19	BOLT RAIL TO SHELF ANGLE (ITEM #10)
20	BOLT SHELF ANGLE (ITEM #'S 10 & 11) TO POST
21	BOLT BLOCK-OUTS (ITEM #'S 13 & 14) TO HEAVY POST
22	(4) PER SPLICE BAR (ITEM #9)
23	(4) PER SPLICE TUBING (ITEM #'S 7 & 8)
24	BOLT RAIL (ITEMS #'S 6,17, & 18 TO BLOCK-OUTS (ITEM #'S 13 & 14) (WHERE FASTENED)
25	BOLT DOUBLE BEND SPLICE TUBE (ITEM #12) TO RAIL (ITEM #18) & KICKBACK (ITEM #15)

APPLICABLE NOTES IN THE BRIDGE RAIL DRAWING SHALL ALSO BE APPLICABLE ON THESE DRAWINGS

ITEM #: 621.725

STRUCTURAL STEEL TO COMPLY W/ ASTM A6

TOLERANCE UNLESS OTHERWISE NOTED:
FRACTIONS = ± 1/16"
ANGLES = ± 1/2°
DIAMETERS = ± 1/32"

SHEET 2 OF 5

GUARD RAIL TO BRIDGE RAIL TRANSITION DETAILS SHEET

VT ROUTE 108 (MAJOR COLLECTOR), BRIDGE # 3
TOWN OF STOWE, COUNTY OF LAMOILLE, VT.

R E V	NO.	DATE	DESCRIPTION	BY

R E V	NO.	DATE	DESCRIPTION	BY

ELDERLEE, INC.
OAKS CORNERS, NEW YORK 14518
email:dlong@elderlee.com / epeek@elderlee.com
Tel:315-789-6670 Fax:315-789-6616

AISC CERTIFIED FABRICATOR

ORTHOGRAPHIC PROJECTION

DRAWN	E.P.	9/1/15
CHECKED	D.L.	9/1/15
APPROVED		
SCALE	SCHEMATIC	
DRAWING NO.	F.R.L.-STOWE BRF 0235 (15)	

(ITEM # 6)

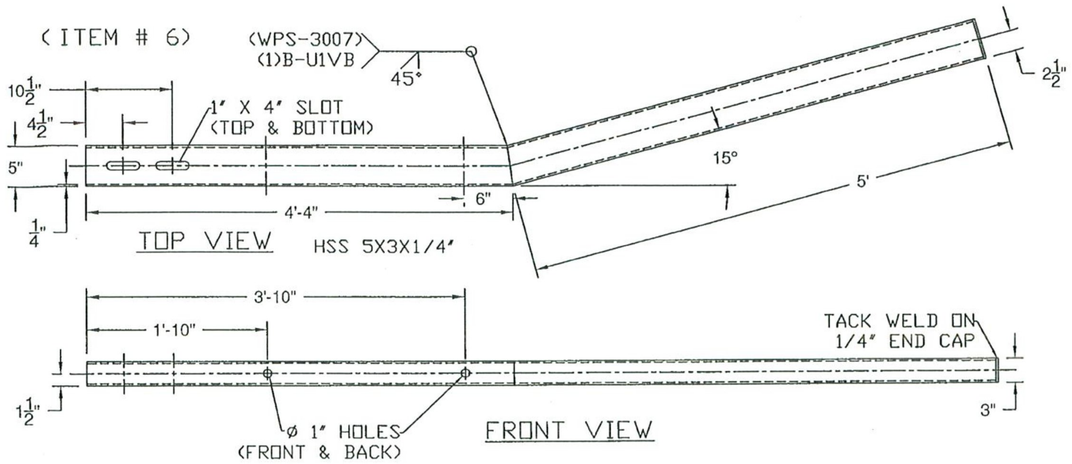

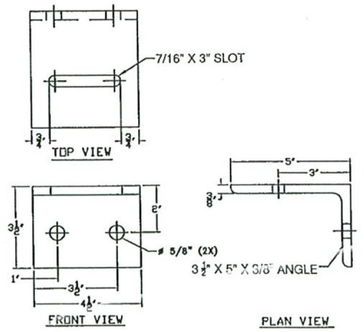

(ITEM # 10)

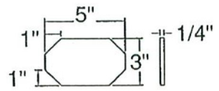

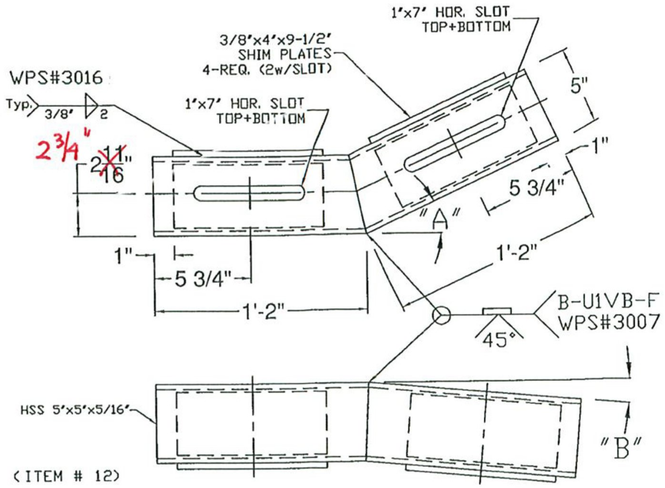

(ITEM # 12)

"A" - 26°
"B" - TURN DOWN ANGLE SET BY THE 9" MEASURMENT AT THE END OF THE BOX BEAM.

BACK VIEW HSS 6X6X3/16"

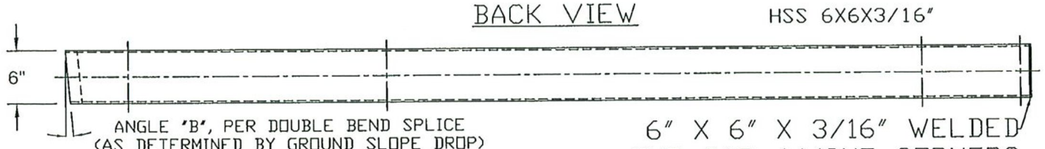

TOP VIEW

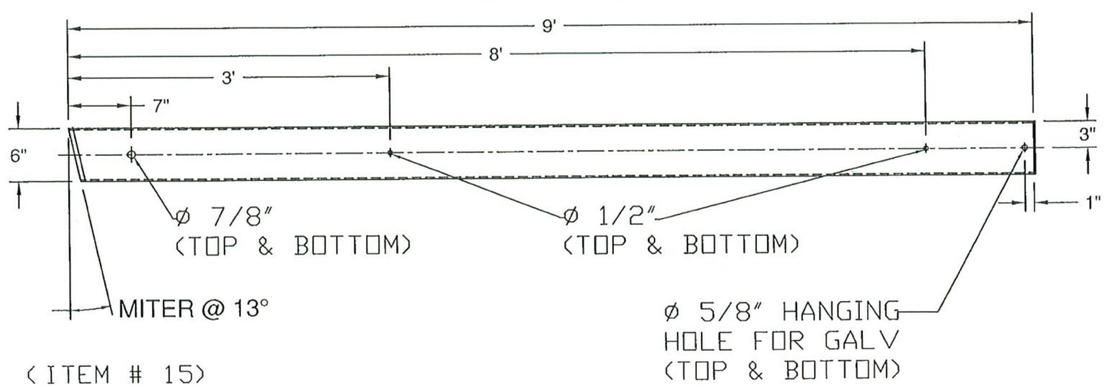

(ITEM # 15)

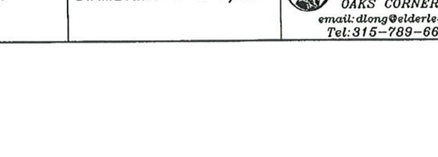

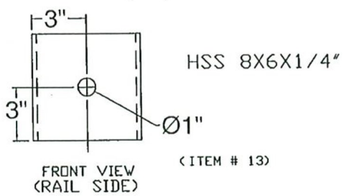

(ITEM # 13)

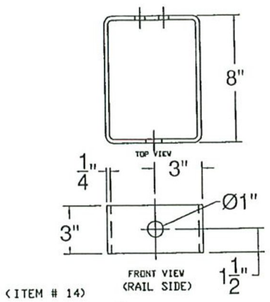

(ITEM # 14)

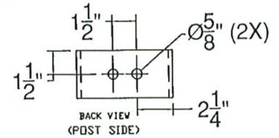

HSS 8X6X1/4"

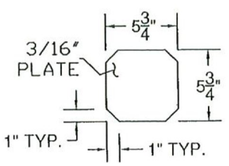

ITEM #: 621.725

STRUCTURAL STEEL TO COMPLY W/ ASTM A6

TOLERANCE UNLESS OTHERWISE NOTED:
FRACTIONS = ± 1/16"
ANGLES = ± 1/2°
DIAMETERS = ± 1/32"

SHEET 3 OF 5

GUARD RAIL TO BRIDGE RAIL TRANSITION DETAILS SHEET

VT ROUTE 108 (MAJOR COLLECTOR), BRIDGE # 3
TOWN OF STOWE, COUNTY OF LAMOILLE, VT.

REV	NO.	DATE	DESCRIPTION	BY

REV	NO.	DATE	DESCRIPTION	BY

ELDERLEE, INC.
OAKS CORNERS, NEW YORK 14518
email: dlong@elderlee.com / epeek@elderlee.com
Tel: 315-789-6670 Fax: 315-789-6616

CERTIFIED FABRICATOR

ORTHOGRAPHIC PROJECTION

DRAWN	E.P.	9/1/15
CHECKED	D.L.	9/1/15
APPROVED	.	.
SCALE	SCHEMATIC	
DRAWING NO.	F.R.L.-STOWE BRF 0235 (15)	

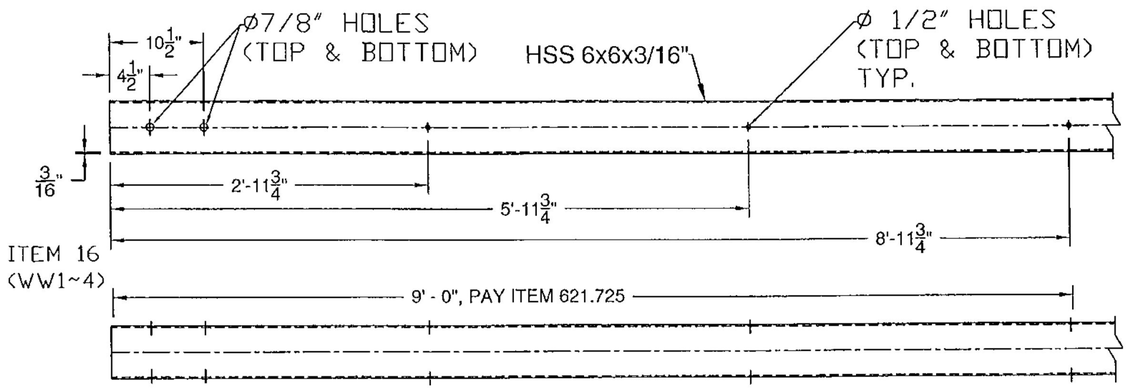

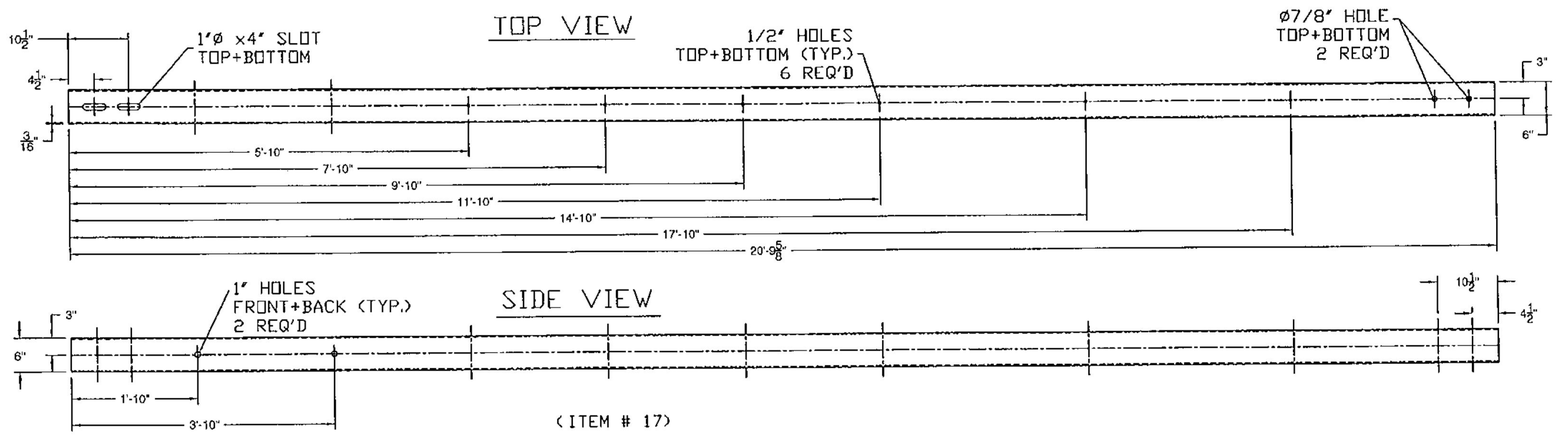

(ITEM # 17)

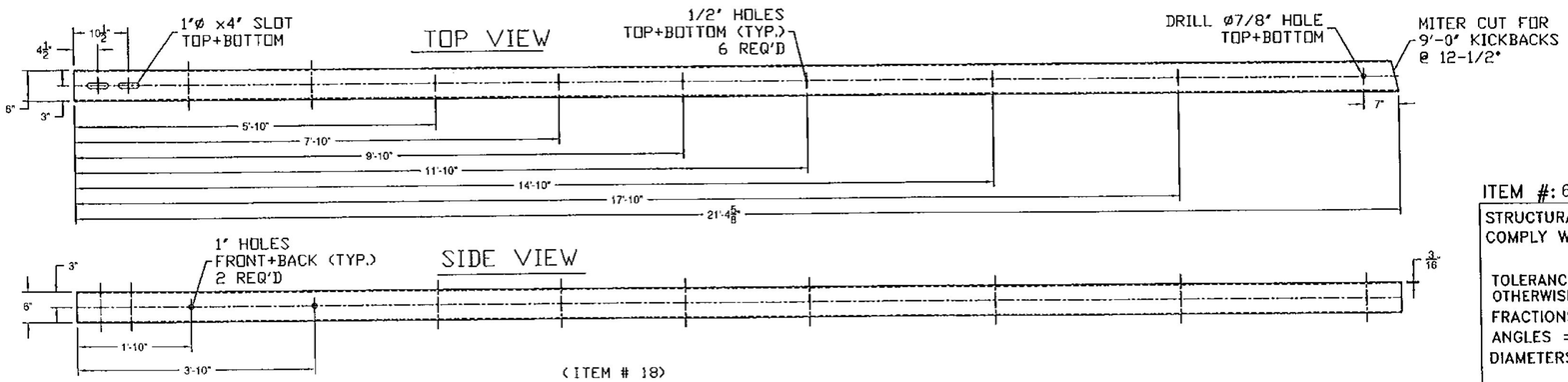

(ITEM # 18)

ITEM #: 621.725

STRUCTURAL STEEL TO COMPLY W/ ASTM A6

TOLERANCE UNLESS OTHERWISE NOTED:
FRACTIONS = ± 1/16"
ANGLES = ± 1/2°
DIAMETERS = ± 1/32"

SHEET 4 OF 5

GUARD RAIL TO BRIDGE RAIL TRANSITION DETAILS SHEET

VT ROUTE 108 (MAJOR COLLECTOR), BRIDGE # 3
TOWN OF STOWE, COUNTY OF LAMOILLE, VT.

REV	NO.	DATE	DESCRIPTION	BY	REV	NO.	DATE	DESCRIPTION	BY

ELDERLEE, INC.
OAKS CORNERS, NEW YORK 14518
email: dlong@elderlee.com / epeck@elderlee.com
Tel: 315-789-6670 Fax: 315-789-6615

AISC CERTIFIED FABRICATOR

ORTHOGRAPHIC PROJECTION

DRAWN	E.P.	9/1/15
CHECKED	D.L.	9/1/15
APPROVED	.	.
SCALE	SCHEMATIC	

DRAWING NO. F.R.L.-STOWE BRF 0235 (15)

SPLICE BAR - EXPANSION

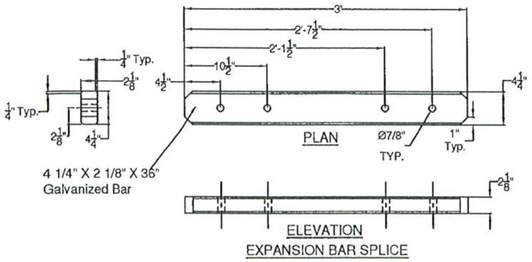

(ITEM # 9)

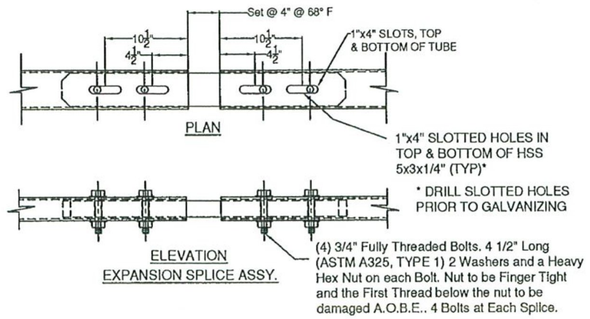

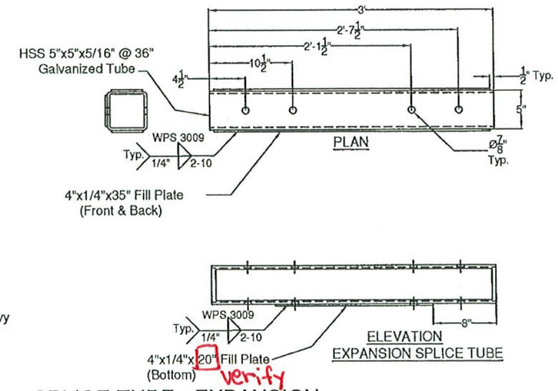

SPLICE TUBE - EXPANSION

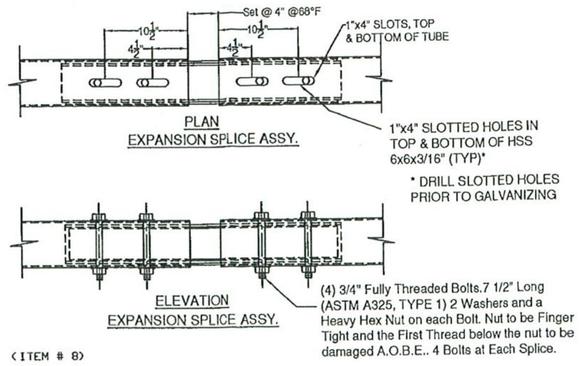

(ITEM # 8)

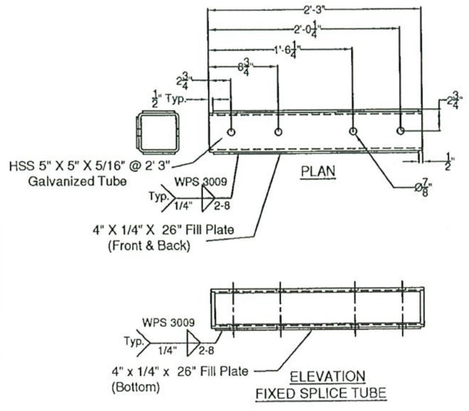

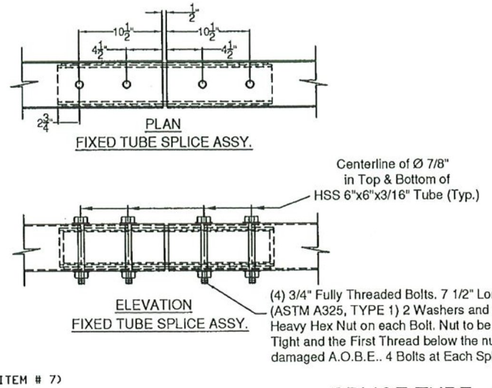

(ITEM # 7)

SPLICE TUBE - FIXED

ITEM #: 621.725

STRUCTURAL STEEL TO COMPLY W/ ASTM A6

TOLERANCE UNLESS OTHERWISE NOTED:
FRACTIONS = ± 1/16"
ANGLES = ± 1/2°
DIAMETERS = ± 1/32"

SHEET 5 OF 5

GUARD RAIL TO BRIDGE RAIL TRANSITION DETAILS SHEET

VT ROUTE 108 (MAJOR COLLECTOR), BRIDGE # 3
TOWN OF STOWE, COUNTY OF LAMOILLE, VT.

R E V	NO.	DATE	DESCRIPTION	BY	R E V	NO.	DATE	DESCRIPTION	BY

ELDERLEE, INC.
OAKS CORNERS, NEW YORK 14518
email: dlong@elderlee.com / speek@elderlee.com
Tel: 315-789-6670 Fax: 315-789-6616

AISC CERTIFIED FABRICATOR

ORTHOGRAPHIC PROJECTION

DRAWN	E.P.	9/1/15
CHECKED	D.L.	9/1/15
APPROVED	.	.
SCALE	SCHEMATIC	
DRAWING NO.	F.R.L.-STOWE BRF 0235 (15)	

WELDING PROCEDURE SPECIFICATION

PQR ELDERLEE#3

Material Specification	A500 GR B to A572 GR 50
Welding Process	FCAW-G
Manual or Machine	SEMAUTOMATIC
Position of Welding	FLAT/HORIZONTAL
Filler Metal Specification	A5.29
Filler Metal Classification	E81T1-Ni1C-JH4
Flux	N/A
Shielding Gas	CO 2 Dew Point -40DEG F Flow Rate 50CFH
Single or Multiple Pass	SINGLE
Single or Multiple Arc	SINGLE
Welding Current	DC
Polarity	REVERSE ELECTRODE POSITIVE
Welding Progression	STRINGER
Root Treatment	PER D1.5
Preheat and Interpass Temperature	PER D1.5
Postheat Temperature	NONE
Heat Input	Min _____ Max _____

WELDING PROCEDURE

Pass no.	Electrode size	Welding Current		Travel speed	Joint detail
		Amperes	Volts		
1	1/16	310	25	11	
Variable	LIMITS	341 TO 269	27 TO 23	12 TO 10	

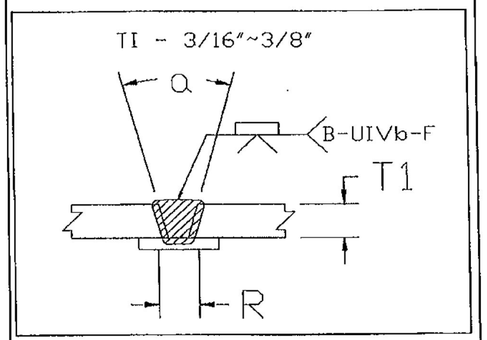

This procedure may vary due to fabrication sequence, fit-up, pass size, etc., within the limitation of variables given in Section 5.

Procedure No. 3007
Revision No. _____

Contractor Elderlee, Inc.
Authorized By RANDY SCOTT
Date 7/28/2014

WELDING PROCEDURE SPECIFICATION

PQR ELDERLEE #3

Material Specification	A709 TO A500 GR B
Welding Process	FCAW-G
Manual or Machine	SEMAUTOMATIC
Position of Welding	FLAT/HORIZONTAL
Filler Metal Specification	A5.29
Filler Metal Classification	E81T1-Ni1C-JH4
Flux	N/A
Shielding Gas	CO 2 Dew Point -40DEG F Flow Rate 50CFH
Single or Multiple Pass	SINGLE
Single or Multiple Arc	SINGLE
Welding Current	DC
Polarity	REVERSE ELECTRODE POSITIVE
Welding Progression	STRINGER
Root Treatment	D1.5
Preheat and Interpass Temperature	D1.5
Postheat Temperature	NONE
Heat Input	Min _____ Max _____

WELDING PROCEDURE

Pass no.	Electrode size	Welding Current Amperes	Welding Current Volts	Travel speed	Joint detail
1	1/16	310	25	11	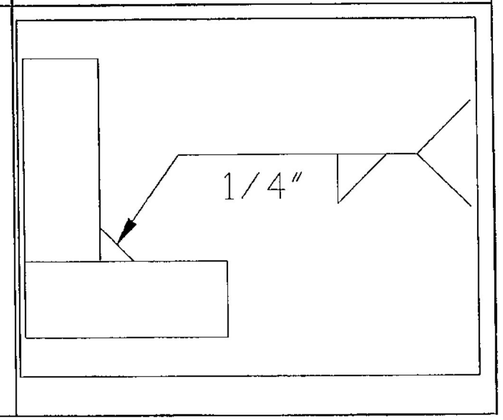
Variable	LIMITS	341 TO 269	27 TO 23	12 TO 10	

This procedure may vary due to fabrication sequence, fit-up, pass size, etc., within the limitation of variables given in Section 5.

Procedure No. 3009

Revision No. _____

Contractor Elderlee, Inc.

Authorized By RANDY SCOTT

Date 3/20/2014

WELDING PROCEDURE SPECIFICATION

PQR ELDERLEE #3

Material Specification	A500 TO A572 GR 50
Welding Process	FCAW-G
Manual or Machine	SEMAUTOMATIC
Position of Welding	FLAT/HORIZONTAL
Filler Metal Specification	A5.29
Filler Metal Classification	E81T1-Ni1C-JH4
Flux	N/A
Shielding Gas	CO 2 Dew Point -40DEG F Flow Rate 50CFH
Single or Multiple Pass	SINGLE
Single or Multiple Arc	SINGLE
Welding Current	DC
Polarity	REVERSE
Welding Progression	STRINGER
Root Treatment	PER D1.5
Preheat and Interpass Temperature	PER D1.5
Postheat Temperature	NONE
Heat Input	Min _____ Max _____

WELDING PROCEDURE

Pass no.	Electrode size	Welding Current Amperes	Welding Current Volts	Travel speed	Joint detail
1	1/16	310	25	11	
Variable	LIMITS	341 TO 269	27 TO 23	12 TO 10	

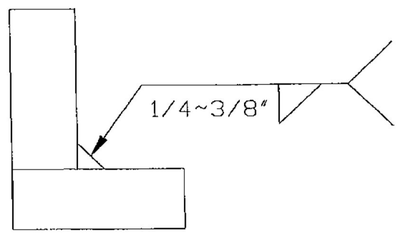

This procedure may vary due to fabrication sequence, fit-up, pass size, etc., within the limitation of variables given in Section 5.

Procedure No. 3016

Revision No. _____

Contractor Elderlee, Inc.

Authorized By RANDY SCOTT

Date 8/4/2014

WELDING PROCEDURE SPECIFICATION

Material Specification	A572 GR 50
Welding Process	GMAW
Manual or Machine	SEMIAUTOMATIC/ROBOTIC
Position of Welding	FLAT/HORIZONTAL
Filler Metal Specification	A5.18
Filler Metal Classification	L-56 LINCOLN
Flux	N/A
Shielding Gas	90% ARGON /10% CO2 Dew Point -40DEG F Flow Rate 45CFH
Single or Multiple Pass	SINGLE
Single or Multiple Arc	SINGLE
Welding Current	DC
Polarity	REVERSE
Welding Progression	STRINGER
Root Treatment	PER D1.5
Preheat and Interpass Temperature	PER D1.5
Postheat Temperature	NONE
Heat Input	Min _____ Max _____

WELDING PROCEDURE

Pass no.	Electrode size	Welding Current Amperes	Welding Current Volts	Travel speed	Joint detail
	.045	190	22	19	
Variable	LIMITS	171 TO 209	20 TO 24	17 TO 21	

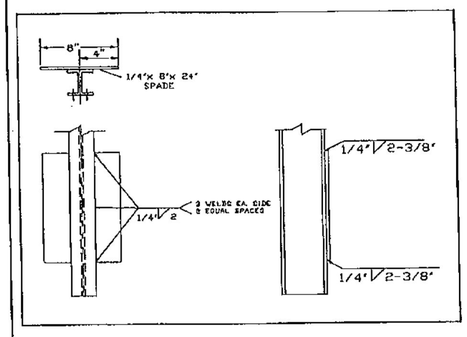

This procedure may vary due to fabrication sequence, fit-up, pass size, etc., within the limitation of variables given in Section 5.

Procedure No. 3022
Revision No. _____

Contractor Elderlee, Inc.
Authorized By RANDY SCOTT
Date 3/20/2014