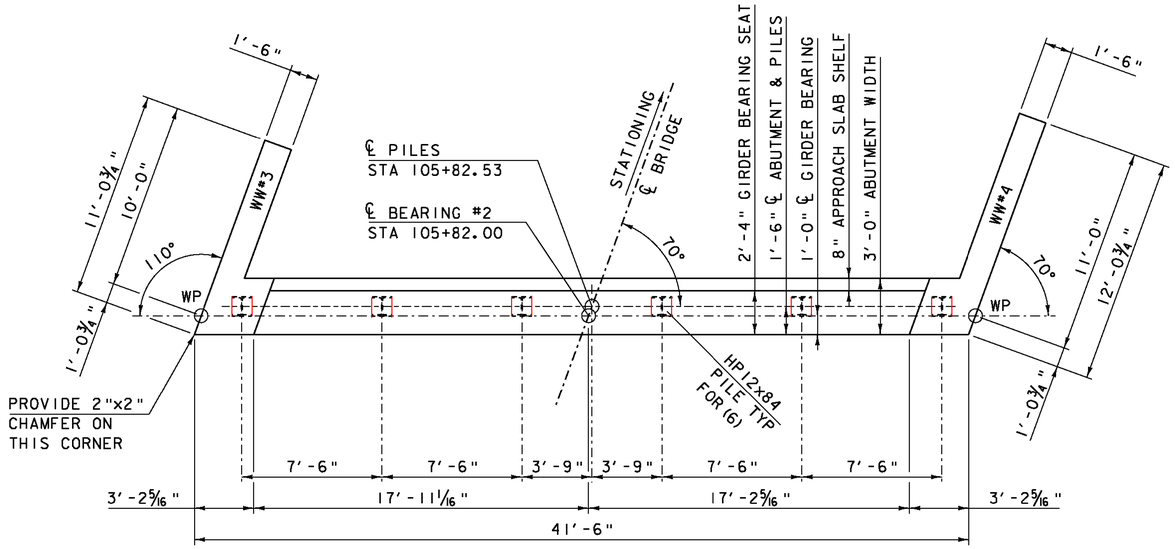

ABUTMENT #2 PLAN

SCALE ¼" = 1'-0"

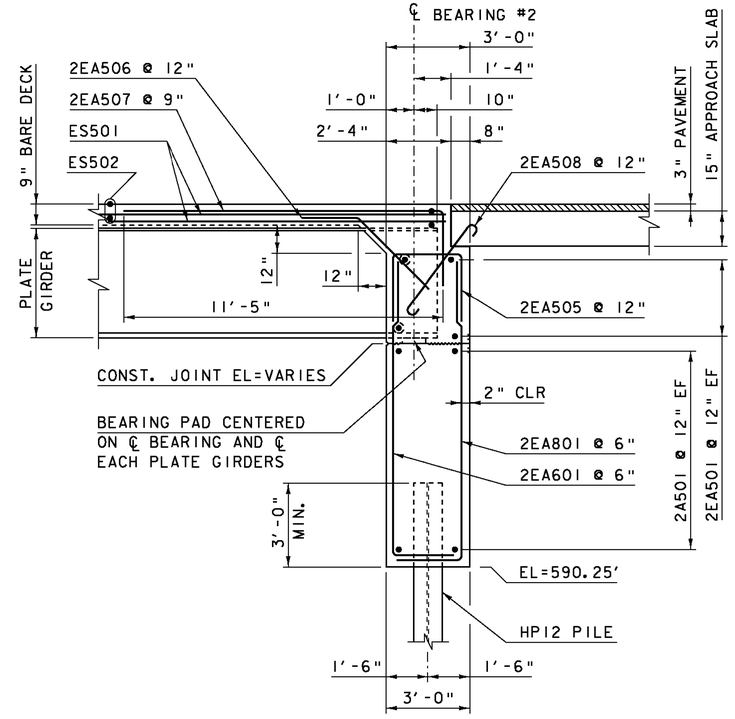

ABUTMENT #2 TYPICAL

SCALE ⅜" = 1'-0"

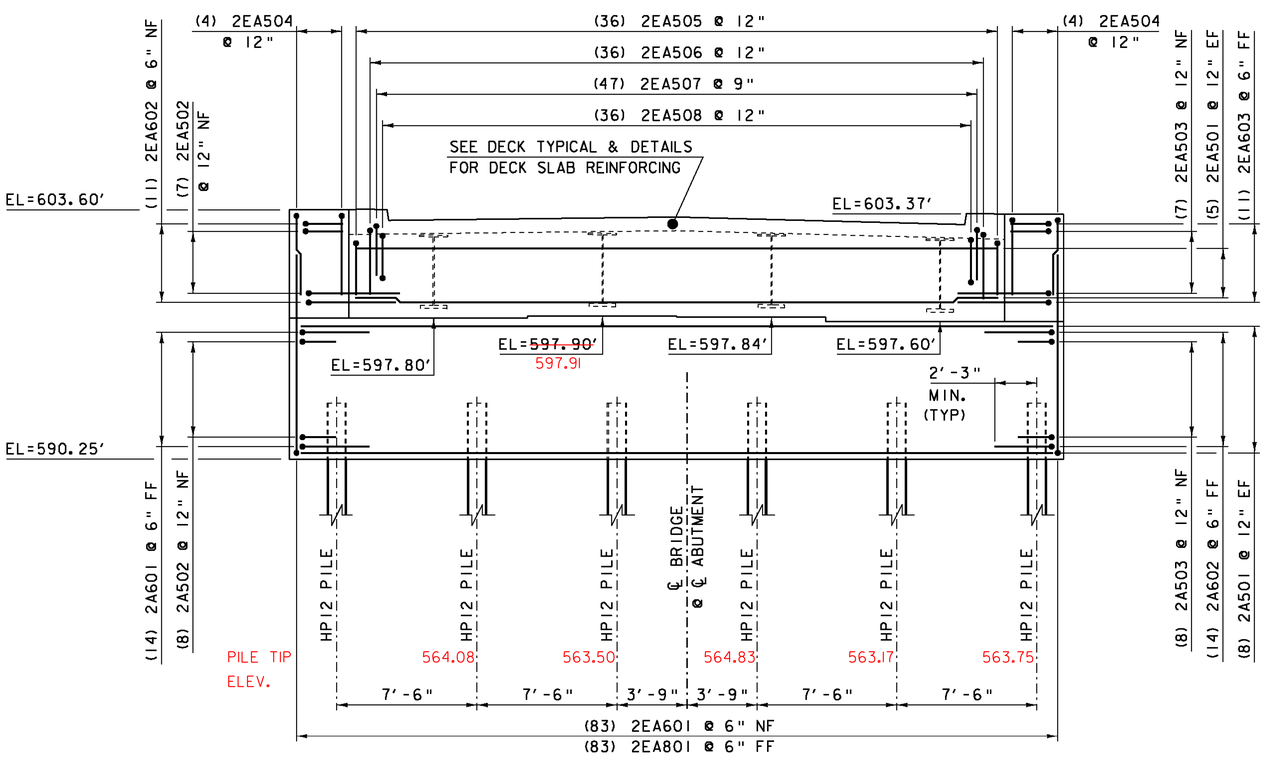

ABUTMENT #2 ELEVATION

SCALE ¼" = 1'-0"

NOTES:

NF = NEAR FACE
FF = FAR FACE
EF = EACH FACE
▲ = CUT TO FIT IN FIELD

3" CLEAR UNLESS OTHERWISE SPECIFIED ON PLANS

ALL LAPS ARE 2'-2" UNLESS OTHERWISE SPECIFIED ON PLANS

SEE SD-601 FOR PILE SPLICE DETAILS

PROJECT NAME: BETHEL	
PROJECT NUMBER: BHF 0241(30)	
FILE NAME: s95c002sub.dgn	PLOT DATE: 31-AUG-2011
PROJECT LEADER: M. EVANS-MONGEON	DRAWN BY: M. LONGSTREET
DESIGNED BY: U. STANLEY	CHECKED BY: U. STANLEY
ABUTMENT #2 PLAN & ELEVATION	SHEET 51 OF 64