STATE OF VERMONT
AGENCY OF TRANSPORTATION

PROPOSED IMPROVEMENT
TOWN OF SWANTON
COUNTY OF FRANKLIN
COMSTOCK ROAD (TH 33, CL 2)
(LOCAL ROAD)

INDEX OF SHEETS

SHEET NUMBER	DESCRIPTION
1	TITLE SHEET /INDEX/STANDARDS
2-3	TYPICAL SECTIONS
4-5	QUANTITY SHEETS
6-7	TIE SHEETS
8	ALIGNMENT / ROW SHEET
9	ROADWAY PLAN
10	PROFILE SHEET
11	DRAINAGE PLAN
12	CONSTRUCTION APPROACH SIGNAGE
13	SIGNING AND PAVEMENT MARKINGS
14-15	TRAFFIC SIGN SUMMARY SHEETS
16-17	SIGNAL ASSEMBLY DETAILS
18	UTILITY PLAN
19-22	COMSTOCK ROAD SECTIONS
23	KELLOG ROAD SECTIONS
24-25	EPSC DETAILS

INDEX OF HIGHWAY STANDARDS

STANDARD	DESCRIPTION	DATE
B-71	STANDARD FOR RESIDENTIAL AND COMMERICAL DRIVES	07/08/2005
D-4	CORRUGATED PIPE END SECTION, ARCH END SECTION, AND ELBOW GRANULAR MATERIAL AT METAL CULVERT LOCATIONS TYPICAL WATERFALL FOR CULVERTS	08/13/2007
D-11	STEEL GRATE, CAST IRON GRATE TYPE A, CAST IRON COVER	06/01/1994
D-15	PRECAST REINF. CONC. CATCH BASIN W/ CAST IRON GRATE PRECAST REINF. CONC. MANHOLE W/ CAST IRON COVER CAST IRON GRATE WITH FRAME, TYPE D CAST IRON GRATE WITH FRAME, TYPE E	06/01/1994
E-100	CONSTRUCTION APPROACH SIGNS	01/02/2004
E-100A	SIDE ROAD CONSTRUCTION - APPROACH SIGNS	01/02/2004
E-101	CONSTRUCTION SIGN DETAILS	05/30/2003
E-102	CONSTRUCTION SIGN DETAILS	06/30/2003
E-102A	CONSTRUCTION SIGN DETAILS	05/01/2004
E-106	TRAFFIC CONTROL - MISCELLANEOUS DETAILS	03/01/2004
E-107	DELINEATION, BARRICADES AND DETOURS FOR CONSTRUCTION AREAS	06/30/2003
E-107A	BREAKAWAY BARRICADE DETAILS	06/08/2009
E-108	CONSTRUCTION ZONE LONGITUDINAL DROP OFFS	06/08/2009
E-108A	CONSTRUCTION ZONE LONGITUDINAL DROP OFFS FOR PAVING	06/08/2009
E-110	MAJOR MAINTENANCE OPERATION LANE CLOSURE	08/08/1995
E-120	STANDARD SIGN PLACEMENT - EXPRESSWAY & FREEWAY	08/08/1995
E-121	STANDARD SIGN PLACEMENT - CONVENTIONAL ROAD	08/08/1995
E-132	GENERAL MOTORIST SERVICES SIGN DETAILS	08/18/1995
E-141	REGULATORY SIGN DETAILS	09/20/1995
E-142	REGULATORY SIGN DETAILS	09/20/1995
E-143	REGULATORY SIGN DETAILS	06/15/2004
E-153B	WARNING SIGN DETAILS	05/30/2003
E-164	SQUARE STEEL SIGN POST	06/08/2009
E-171B	TRAFFIC CONTROL SIGNALS MISCELLANEOUS DETAILS	08/09/1995
E-173	PULL BOXES AND JUNCTION BOXES	08/09/1995
E-175	POWER DROP STANCHIONS	06/08/2009
E-190	RAILROAD CROSSING SIGNS AND PAVEMENT MARKINGS	06/30/2003
E-193	PAVEMENT MARKING DETAILS	08/18/1995
J-3	MAILBOX SUPPORT DETAILS	08/07/1995
RR-1	RAIL CROSSING HIGHWAY STANDARD PAVED CROSSING FOR GRAVEL OR PAVED HIGHWAYS	06/01/1994

INDEX OF RAIL AMERICA STANDARDS

NAME	DESCRIPTION	DATE
RA-MS-021	INSTRUMENT CASE STANDARD DOUBLE HIGH SPECS	02/16/04
RA-MS-030	FLASHING LIGHT SIGNAL	02/16/04
RA-IS-001	TYPICAL SHUNT AND COUPLER INSTALLATIONS ON WOODEN TIES	02/16/04
RA-IS-002	TYPICAL GROUNDING PROCEDURES	02/16/04
RA-IS-003	TYPICAL TRACK CONNECTIONS	02/16/04
RA-IS-008	TYPICAL BONDING METHOD JOINTED RAIL	02/16/04
SC431.1	HOUSINGS, SIGNALS AND FOUNDATIONS	03/01/09
SC600.1	CROSSING WARNING DEVICES	09/27/10
SC610.1	UNDERGROUND CABLE ROUTES	09/27/10
ES1024X.0	VEHICLE BLOCKING CROSSING OR OTHER EMERGENCY SIGN	03/15/11

TYPICAL SECTIONS 1

MATERIAL ITEM	THICKNESS / TOLERANCE
PAVEMENT	+/- ¼ "
SUBBASE OF GRAVEL	+/- 1 "

GENERAL NOTES

1. EMULSIFIED ASPHALT SHALL BE APPLIED ON EXISTING PAVEMENT SURFACES, BETWEEN ALL COURSES OF PAVEMENT AND ON COLD PLANED SURFACES, AT THE RATE OF 0.025 GAL/SY OR AS DIRECTED BY THE ENGINEER.

2. COLD PLANING TO BE COMPLETED ACCORDING TO TYPICAL OR AS NOTED OTHERWISE ON THE PLANS. THE COLD PLANING AND PAVING SHALL MATCH THE EXISTING CONDITIONS AT THE BEGINNING AND END OF CONSTRUCTION AREAS BY THE USE OF A PAVED FILLET. SEE DETAIL ON THIS SHEET. ALL DRIVES SHALL RECEIVE A PAVED APRON AS DIRECTED BY THE RESIDENT ENGINEER.

3. ALL OTHER SUPERPAVE BITUMINOUS CONCRETE PAVEMENT WORK, WHICH COULD INVOLVE SOME HAND-WORK (SUCH AS DRIVEWAYS) SHALL BE INCLUDED IN THE UNIT PRICE BID FOR ITEM 900.680 SPECIAL PROVISION (BITUMINOUS CONCRETE PAVEMENT, SMALL QUANTITY).

SEEDING NOTES

VAOT RURAL AREA MIX					
	LBS/AC				
% WEIGHT	BROADCAST	HYDROSEED	NAME	GERM %	PURITY %
37.5%	22.5	45	CREEPING RED FESCUE	85%	98%
37.5%	22.5	45	TALL FESCUE	90%	95%
5.0%	3	6	RED TOP	90%	95%
15.0%	9	18	BIRDSFOOT TREFOIL	85%	98%
5.0%	3	6	ANNUAL RYE GRASS	85%	95%
100%	60	120			

VAOT URBAN AREA MIX					
	LBS/AC				
% WEIGHT	BROADCAST	HYDROSEED	NAME	GERM %	PURITY %
42.5%	34	68	CREEPING RED FESCUE	85%	98%
10.0%	8	16	PERENNIAL RYE GRASS	90%	95%
42.5%	34	68	KENTUCKY BLUE GRASS	85%	85%
5.0%	4	8	ANNUAL RYE GRASS	85%	95%
100%	80	160			

GENERAL GUIDANCE			
FERTILIZER		LIME	
BROADCAST	HYDROSEED	BROADCAST	HYDROSEED
10-20-10	19-19-19	PELLETIZED	LIQUID
500 LBS/AC		2 TONS/AC	4.4 GAL/AC

1. RURAL SEED MIX: USE AS INDICATED IN THE PLANS AND/OR FOR ALL ESTABLISHED UPLAND (NON WETLAND) AREAS DISTURBED BY THE CONTRACTOR.

2. URBAN SEED MIX: USE AS INDICATED IN THE PLANS AND/OR FOR ALL ESTABLISHED LAWN AREAS DISTURBED BY THE CONTRACTOR.

3. ALL SEED MIXTURES: SHALL NOT HAVE A WEED CONTENT EXCEEDING 0.40% BY WEIGHT AND SHALL BE FREE OF ALL NOXIOUS SEED.

4. FERTILIZER AND LIMESTONE: SHALL FOLLOW RATES SHOWN ON PLAN OR AS DIRECTED BY THE ENGINEER

5. HAY MULCH: TO BE PLACED ON EARTH SLOPES AT THE RATE OF 2 TONS/ACRE, ACHIEVE 90% GROUND COVER OR AS DIRECTED BY THE ENGINEER.

6. TOPSOIL: TO BE USED WITH SEED AS INDICATED ON THE PLANS, OR AS DIRECTED BY THE ENGINEER.

7. HYDROSEEDING: ALTHOUGH GUIDANCE IS GIVEN ABOVE THE SITE CONDITIONS AND THE TYPE OF HYDROSEED WILL ULTIMATELY DICTATE THE AMOUNTS AND TYPES OF SOIL AMENDMENTS TO BE APPLIED

8. TURF ESTABLISHMENT: PLACING SEED, FERTILIZER, LIME AND MULCH PRIOR TO SEPTEMBER 15 AND AFTER APRIL 15 CAN BETTER ENSURE A VIGOROUS GROWTH OF GRASS.

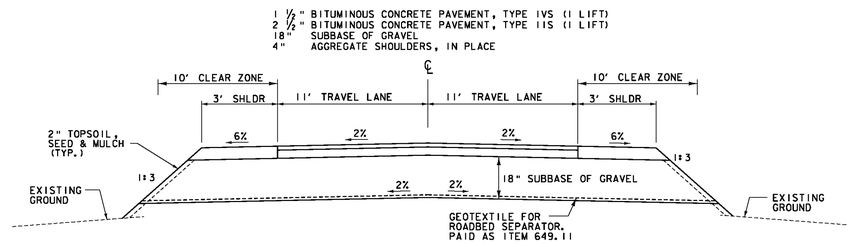

COMSTOCK ROAD & KELLOGG ROAD SECTION

NOT TO SCALE

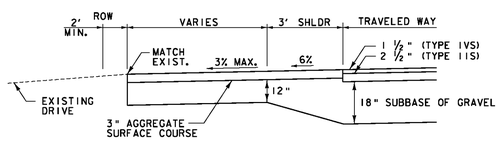

RESIDENTIAL DRIVEWAY SECTION

NOT TO SCALE

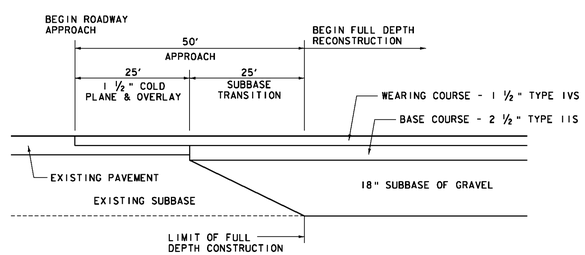

TYPICAL PAVEMENT & SUBBASE TRANSITION

NOT TO SCALE

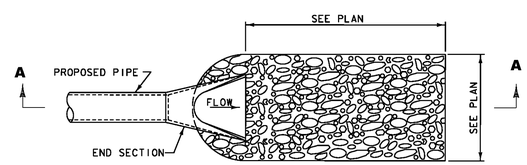

PLAN

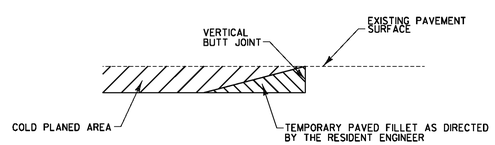

DETAIL AT VERTICAL COLD PLANE JOINTS

NOT TO SCALE

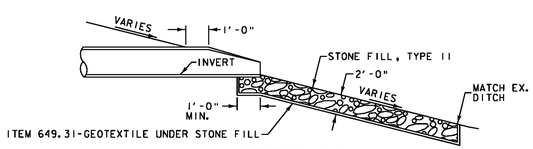

SECTION A-A

STORM DRAIN OUTLET PROTECTION

NOT TO SCALE

Stantec

PROJECT NAME: SWANTON	
PROJECT NUMBER: STP 2038(16)	
FILE NAME: ...\Plot-Files\02_typicals.ptf	PLOT DATE: 9/9/2011
PROJECT LEADER: G. EDWARDS	DRAWN BY: KJR
DESIGNED BY: STANTEC	CHECKED BY: GAE
TYPICAL SECTIONS - TYP 1	SHEET 2 OF 25

TYPICAL SECTIONS 2

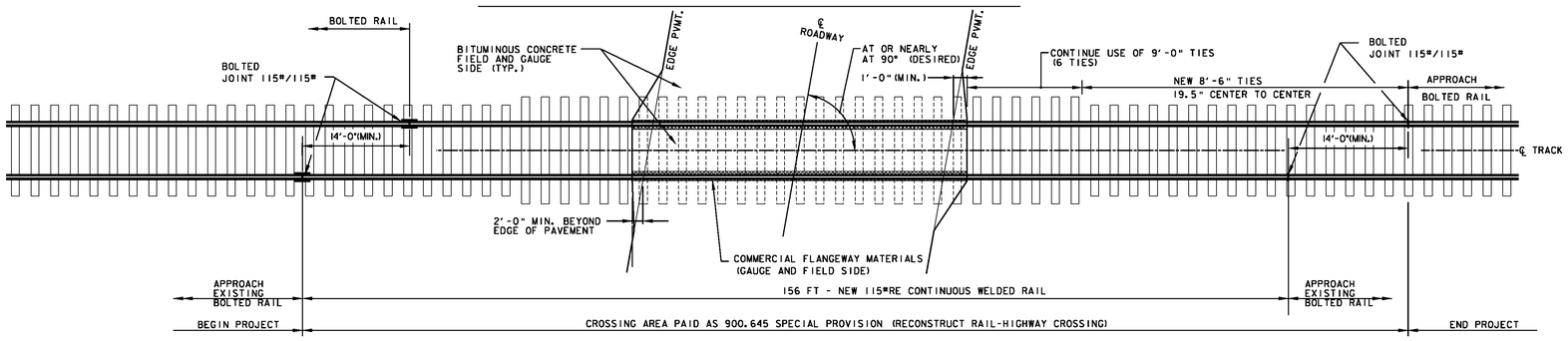

TYPICAL PLAN VIEW
COMSTOCK ROAD CROSSING
NOT TO SCALE

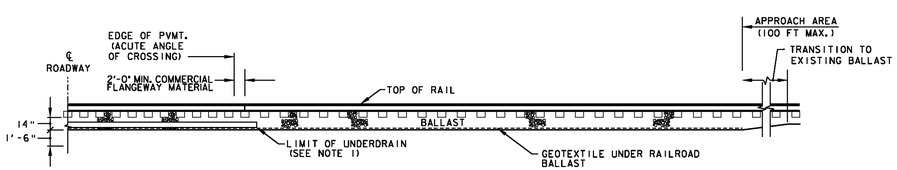

TYPICAL LONGITUDINAL SECTION
COMSTOCK ROAD CROSSING
NOT TO SCALE

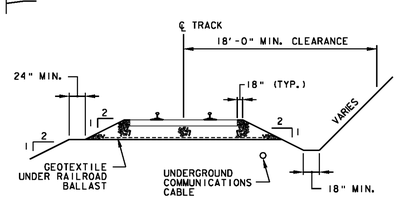

TYPICAL SECTION RAILROAD
NOT TO SCALE

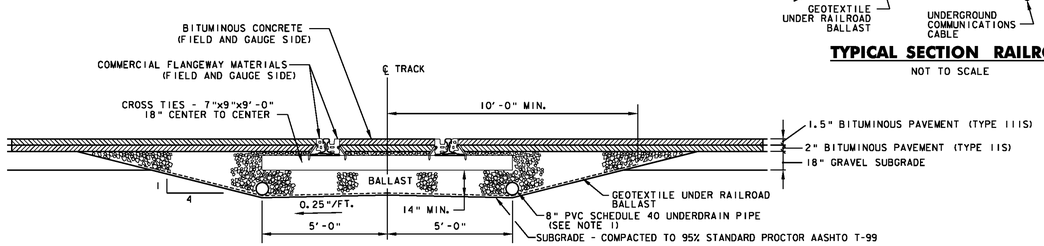

TYPICAL TRANSVERSE SECTION
COMSTOCK ROAD CROSSING
NOT TO SCALE

GENERAL NOTES

1. NEW UNDERDRAIN PIPE SHALL OUTLET AS SHOWN ON PLAN. PERFORATIONS TO BE PLACED NEAR FLOW LINE OF PIPE. GEOTEXTILE SHALL BE GEOTEXTILE UNDER RAILROAD BALLAST. UNDERDRAIN PIPE SHALL BE BITUMINOUS COATED CORRUGATED METAL OR SCHEDULE 40 PVC PERFORATED PIPE.
2. ALL RAIL JOINTS WITHIN THE CROSSING AREA AND 50'-0" BEYOND WILL BE CROPPED AND WELDED IN ACCORDANCE WITH THE LATEST REVISION OF A.R.E.M.A. SPECIFICATIONS AT AN OFF-SITE ELECTRIC WELDING PLANT. WELDING CAN BE DONE IN FIELD UTILIZING THERMITE WELDING WITH ADVANCE APPROVAL FROM THE AGENCY. WELDED JOINTS SHALL BE GROUND TO CONFORM TO THE SHAPE OF THE RAIL ON GAUGE AND FIELD SIDES.
3. TIE SPACING UNDER CWR AREA SHALL BE 19.5 INCHES ON CENTER OR AS REQUIRED IN CROSSING PANEL AREA BY MANUFACTURER.
4. NEW 7"x9"x9'-0" AND 7"x9"x8'-6" TIES SHALL BE USED IN CROSSING AREA AS SHOWN. TIES IN CROSSING AREAS SHALL BE REPLACED AS RECOMMENDED BY THE RAILROAD AND APPROVED BY THE ENGINEER (PAID INCIDENTAL TO ITEM 900.645 SPECIAL PROVISION (RECONSTRUCT RAIL HIGHWAY CROSSING)). TIES REQUIRED OUTSIDE OF CROSSING AREA SHALL BE PAID AS ITEM 900.620 SPECIAL PROVISION (REMOVAL AND REPLACEMENT OF CROSS TIES).
5. TIE PLATES SHALL BE NEW 14 INCH PLATES, MANUFACTURED FOR THE RAIL SIZE USED. PLATES SHALL BE INSPECTED AND APPROVED BY THE RAILROAD AND THE ENGINEER. RAIL FASTENERS SHALL BE CUT TRACK SPIKES.
6. BALLAST SHALL EXTEND 18" BEYOND END OF TIES AND SLOPED 1:2 TO THE ROADBED. (SEE DETAIL)
7. TYPE AND DESIGN OF COMMERCIAL FLANGEWAY MATERIALS SHALL RECEIVE APPROVAL FROM THE ENGINEER.
8. MANUFACTURER'S SPECIFICATIONS SHALL BE FOLLOWED FOR THE INSTALLATION OF COMMERCIAL FLANGEWAY MATERIALS.
9. INSTALLATION OF INSULATED JOINTS: THE MAXIMUM STAGGER BETWEEN RAIL JOINTS SHALL BE 4'-6", MINIMUM SHALL BE 3'-6".
10. CONTRACTOR SHALL ADD BALLAST, LINE, TAMP, AND SURFACE TRACK IN APPROACH AREAS TO OBTAIN A SMOOTH TRANSITION BETWEEN EXISTING AND PROPOSED TRACK TO THE SATISFACTION OF THE ENGINEER AND RAILROAD. THIS WORK IS INCIDENTAL TO ITEM 900.645 (RECONSTRUCT RAIL-HIGHWAY CROSSING).
11. EXCAVATION, UNDERDRAIN, BALLAST, GEOTEXTILE, FLANGEWAY MATERIALS AND TIES ARE INCIDENTAL TO ITEM 900.645 SPECIAL PROVISION (RECONSTRUCT RAIL-HIGHWAY CROSSING).
12. THE RAIL HIGHWAY CROSSING SHALL BE RECONSTRUCTED IN STAGES WHILE MAINTAINING TRAFFIC OPERATIONS. ONE LANE ON TH-33 SHALL BE KEPT OPEN TO TRAFFIC AT ALL TIMES AND A COMPLETE ROAD CLOSURE IS NOT PERMITTED. TH-33 SHALL BE LEFT OPEN FOR TWO WAY TRAFFIC AT THE END OF EACH WORKING DAY.

Stantec

PROJECT NAME: SWANTON	
PROJECT NUMBER: STP 2038(16)	
FILE NAME: ...\Plot-Files\02_typicals.pt+f	PLOT DATE: 8/31/2011
PROJECT LEADER: G. EDWARDS	DRAWN BY: KJR
DESIGNED BY: STANTEC	CHECKED BY: GAE
TYPICAL SECTIONS - TYP 2	SHEET 3 OF 25

STATE OF VERMONT
AGENCY OF TRANSPORTATION

QUANTITY SHEET 1

SUMMARY OF ESTIMATED QUANTITIES								TOTALS		DESCRIPTIONS			
						ROADWAY	RAILROAD	EROSION CONTROL	FULL C.E. ITEMS	GRAND TOTAL	FINAL	UNIT	ITEMS	ITEM NUMBER	ROUND
						1000				1000		CY	COMMON EXCAVATION	203.15	86
						200				200		CY	TRENCH EXCAVATION OF EARTH	204.20	31
						1				1		CY	TRENCH EXCAVATION OF EARTH, EXPLORATORY (N.A.B.I.)	204.22	-
						200				200		SY	COLD PLANING, BITUMINOUS PAVEMENT	210.10	17
						800				800		CY	SUBBASE OF GRAVEL	301.15	85
						10				10		CY	AGGREGATE SURFACE COURSE	401.10	2
						45				45		CY	AGGREGATE SHOULDERS, IN PLACE	402.10	2
						4				4		CWT	EMULSIFIED ASPHALT	404.65	1
						1				1		LU	PRICE ADJUSTMENT, ASPHALT CEMENT (N.A.B.I.)	406.50	-
						39				39		LF	18" CPEP	601.0915	-
						95				95		LF	30" CPEP(SL)	601.2625	-
						1				1		EACH	18" CPEPES	601.7015	-
						1				1		EACH	30" CPEPES	601.7025	-
						1				1		EACH	PRECAST REINFORCED CONCRETE CATCH BASIN WITH CAST IRON GRATE	604.20	-
						5				5		HR	ALL PURPOSE EXCAVATOR RENTAL, TYPE I	608.25	EST.
						5				5		HR	TRUCK RENTAL	608.37	EST.
						5				5		HR	LOADER RENTAL, TYPE I	608.40	EST.
						0.1				0.1		MGAL	DUST CONTROL WITH WATER	609.10	EST.
						20				20		CY	STONE FILL, TYPE II	613.11	2
						1				1		EACH	RELOCATE MAILBOX, SINGLE SUPPORT	617.10	-
						2				2		EACH	YIELDING MARKER POSTS	619.17	-
						50				50		HR	UNIFORMED TRAFFIC OFFICERS	630.10	EST.
						400				400		HR	FLAGGERS	630.15	EST.
						1				1		LS	MOBILIZATION/DEMOBILIZATION	635.11	-
						1				1		LS	TRAFFIC CONTROL	641.10	-
						2				2		EACH	PORTABLE CHANGEABLE MESSAGE SIGN	641.15	-
						1100				1100		LF	4 INCH YELLOW LINE	646.21	10
						50				50		LF	24 INCH STOP BAR	646.26	2
						2				2		EACH	RAILROAD CROSSING SYMBOL	646.32	-
						3000				3000		SY	GEOTEXTILE UNDER RAILROAD BALLAST	649.21	-
						75				75		SY	GEOTEXTILE UNDER STONE FILL	649.31	1
								80		80		SY	GEOTEXTILE FOR SILT FENCE	649.51	0.5
								50		50		LB	SEED	651.15	2
								200		200		LB	FERTILIZER	651.18	-
								1		1		TON	AGRICULTURAL LIMESTONE	651.20	0.2
								1		1		TON	HAY MULCH	651.25	0.1
								110		110		CY	TOPSOIL	651.35	2.4
								570		570		SY	TEMPORARY EROSION MATTING	653.20	4.4
								50		50		CY	VEHICLE TRACKING PAD	653.35	5.6
								1		1		EACH	INLET PROTECTION DEVICE, TYPE I	653.40	-

DETAILED SUMMARY OF QUANTITIES		
QUANTITIES	UNIT	ITEMS

Stantec

PROJECT NAME: SWANTON
PROJECT NUMBER: STP 2038(16)

FILE NAME: ...\Plot-Files\04_quantities.pltf PLOT DATE: 8/26/2011
PROJECT LEADER: G. EDWARDS DRAWN BY: KJR
DESIGNED BY: KJR CHECKED BY: GAE
QUANTITY SHEET 1 SHEET 4 OF 25

STATE OF VERMONT
AGENCY OF TRANSPORTATION

QUANTITY SHEET 2

SUMMARY OF ESTIMATED QUANTITIES									TOTALS		DESCRIPTIONS			
							ROADWAY	RAILROAD	EROSION CONTROL	FULL C.E. ITEMS	GRAND TOTAL	FINAL	UNIT	ITEMS	ITEM NUMBER	ROUND
									559		559		LF	BARRIER FENCE	653.50	6
									268		268		LF	PROJECT DEMARCATION FENCE	653.55	3
							78				78		SF	TRAFFIC SIGNS, TYPE A	675.20	-
							102				102		LF	SQUARE TUBE SIGN POST AND ANCHOR	675.341	-
							9				9		EACH	REMOVING SIGNS	675.50	-
							2				2		EACH	ERECTING SALVAGED SIGNS	675.60	-
								20			20		EACH	SPECIAL PROVISION (REMOVAL AND REPLACEMENT OF CROSS TIES)	900.620	EST.
										1	1		LS	SPECIAL PROVISION (FIELD OFFICE, ENGINEERS)	900.645	-
								1			1		LS	SPECIAL PROVISION (RAIL - HIGHWAY CROSSING ACTIVE WARNING SYSTEM)(AARDOT 247-419V)	900.645	
								1			1		LS	SPECIAL PROVISION (RECONSTRUCT RAIL - HIGHWAY CROSSING)(AARDOT 247-419V)	900.645	
								1			1		LU	SPECIAL PROVISION (MAINTENANCE OF RAILROAD TRAFFIC)(N.A.B.I.)	900.650	-
							1				1		LU	SPECIAL PROVISION (MAT DENSITY PAY ADJUSTMENT, SMALL QUANTITY)(N.A.B.I.)	900.650	-
							1				1		LU	SPECIAL PROVISION (MIXTURE PAY ADJUSTMENT)(N.A.B.I.)	900.650	-
							345				345		TON	SPECIAL PROVISION (BITUMINOUS CONCRETE PAVEMENT, SMALL QUANTITY)	900.680	40

DETAILED SUMMARY OF QUANTITIES		
QUANTITIES	UNIT	ITEMS

Stantec

PROJECT NAME: SWANTON
PROJECT NUMBER: STP 2038(16)

FILE NAME: ...\Plot-Files\05_quantities.pt3 PLOT DATE: 9/19/2011
PROJECT LEADER: G. EDWARDS DRAWN BY: KJR
DESIGNED BY: KJR CHECKED BY: GAE
QUANTITY SHEET 2 SHEET 5 OF 25

GPS CONTROL POINTS

HVCTRL # 1

D 64

NORTH = 10000.00
EAST = 50000.00
ELEV. = 321.19

DESCRIBED BY NATIONAL GEODETIC SURVEY 1984
9.3 KM (5.8 MI) SOUTH FROM SWANTON.
0.2 KM (0.1 MI) NORTHWEST ALONG STATE HIGHWAY 78 FROM THE BRIDGE OVER MISSISQUOI RIVER IN SWANTON, THENCE 2.0 KM (1.25 MI) SOUTH ALONG RIVER STREET, THENCE 2.7 KM (1.7 MI) SOUTHEAST ALONG A COUNTY ROAD, THENCE 4.4 KM (2.75 MI) SOUTH ALONG U.S. HIGHWAY 7 TO THE MARK ON THE LEFT, ALSO 6.3 KM (3.9 MI) NORTH ALONG U.S. HIGHWAY 7 FROM THE POST OFFICE IN ST. ALBANS, 9.9 METERS (32.5 FT) NORTHEAST OF THE CENTERLINE OF THE HIGHWAY. THE MARK IS 1.3 METERS NW FROM A WITNESS POST.
THE MARK IS 0.45 M ABOVE HIGHWAY.

TRAVERSE TIES

HVCTRL #2

NORTH = 9729.26
EAST = 49566.73
ELEV. = 290.48

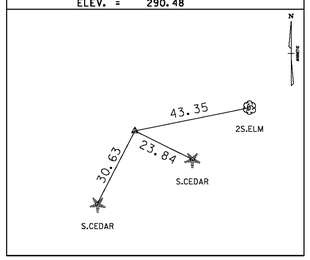

HVCTRL #3

NORTH = 9433.47
EAST = 48903.95
ELEV. = 242.691

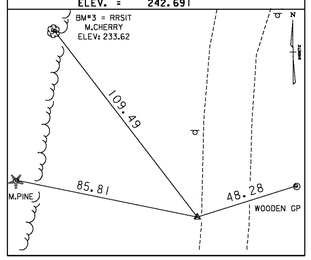

• Main Traverse Completed 12/06/2005 by G.Hitchcock PC & J.Hulett

ALIGNMENT POINTS
COMSTOCK ROAD

1+00.00 POB

NORTH = 9740.0047
EAST = 48814.0861

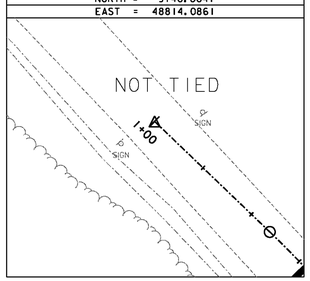

1+59.48 PC

NORTH = 9698.8155
EAST = 48856.9958

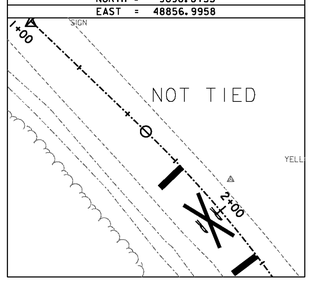

2+83.75 PRC

NORTH = 9600.3219
EAST = 48931.9510

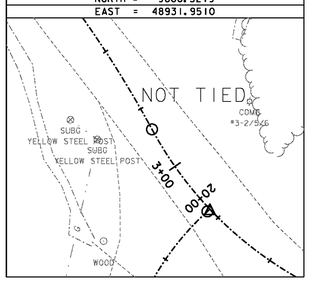

4+36.36 PCC

NORTH = 9526.8628
EAST = 49057.1622

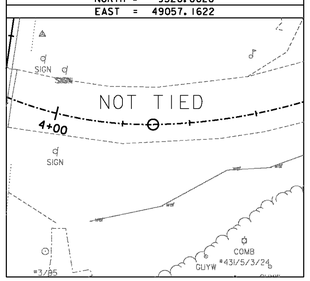

5+20.63 PT

NORTH = 9544.7312
EAST = 49138.9381

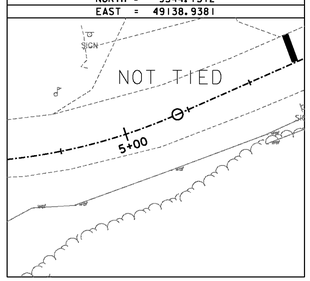

DATUM	
VERTICAL	NAVD 88
HORIZONTAL	ASSUMED
ADJUSTMENT	None

Stantec

PROJECT NAME: SWANTON
PROJECT NUMBER: STP 2038(16)

FILE NAME: ...\drawing\Plot-Files\06_tie.pltPLOT DATE: 8/26/2011
PROJECT LEADER: G. EDWARDS
DRAWN BY: KJR
DESIGNED BY: KJR
CHECKED BY: GAE
TIE SHEET 1
SHEET 6 OF 25

ALIGNMENT POINTS
COMSTOCK ROAD

5+75.00 POE

NORTH =	9566.6894
EAST =	49188.6732

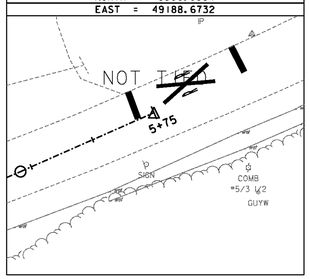

ALIGNMENT POINTS
KELLOGG ROAD

20+00.00 POB

NORTH =	9570.5602
EAST =	48953.5049

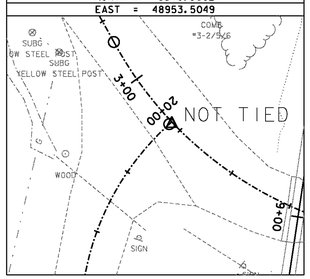

20+01.22 PC

NORTH =	9569.7425
EAST =	48952.5982

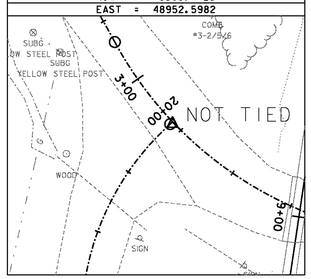

20+81.71 PT

NORTH =	9498.6922
EAST =	48919.6219

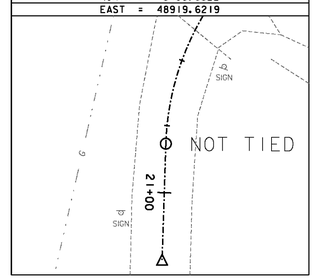

21+25.00 POE

NORTH =	9455.4203
EAST =	48918.2318

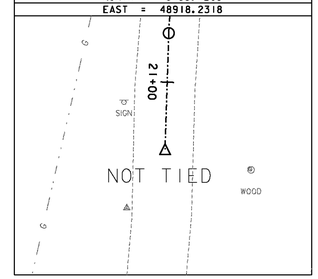

ALIGNMENT POINTS
RAILROAD CENTERLINE

0+00.00 POB

NORTH =	10425.2691
EAST =	49133.6383

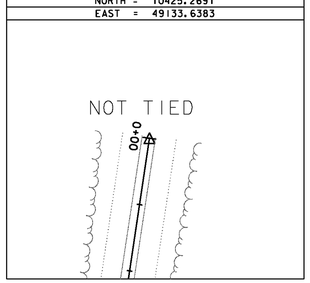

18+16.69 POE

NORTH =	8628.5459
EAST =	48865.0141

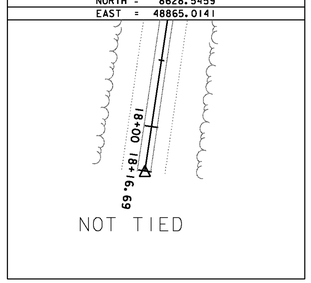

DATUM	
VERTICAL	NAVD 88
HORIZONTAL	ASSUMED
ADJUSTMENT	None

Stantec

PROJECT NAME:	SWANTON
PROJECT NUMBER:	STP 2038(16)

FILE NAME: ...\drawing\Plot-Files\06_tie.pltPLOT DATE: 8/26/2011
PROJECT LEADER: G. EDWARDS — DRAWN BY: KJR
DESIGNED BY: KJR — CHECKED BY: GAE
TIE SHEET 2 — SHEET 7 OF 25

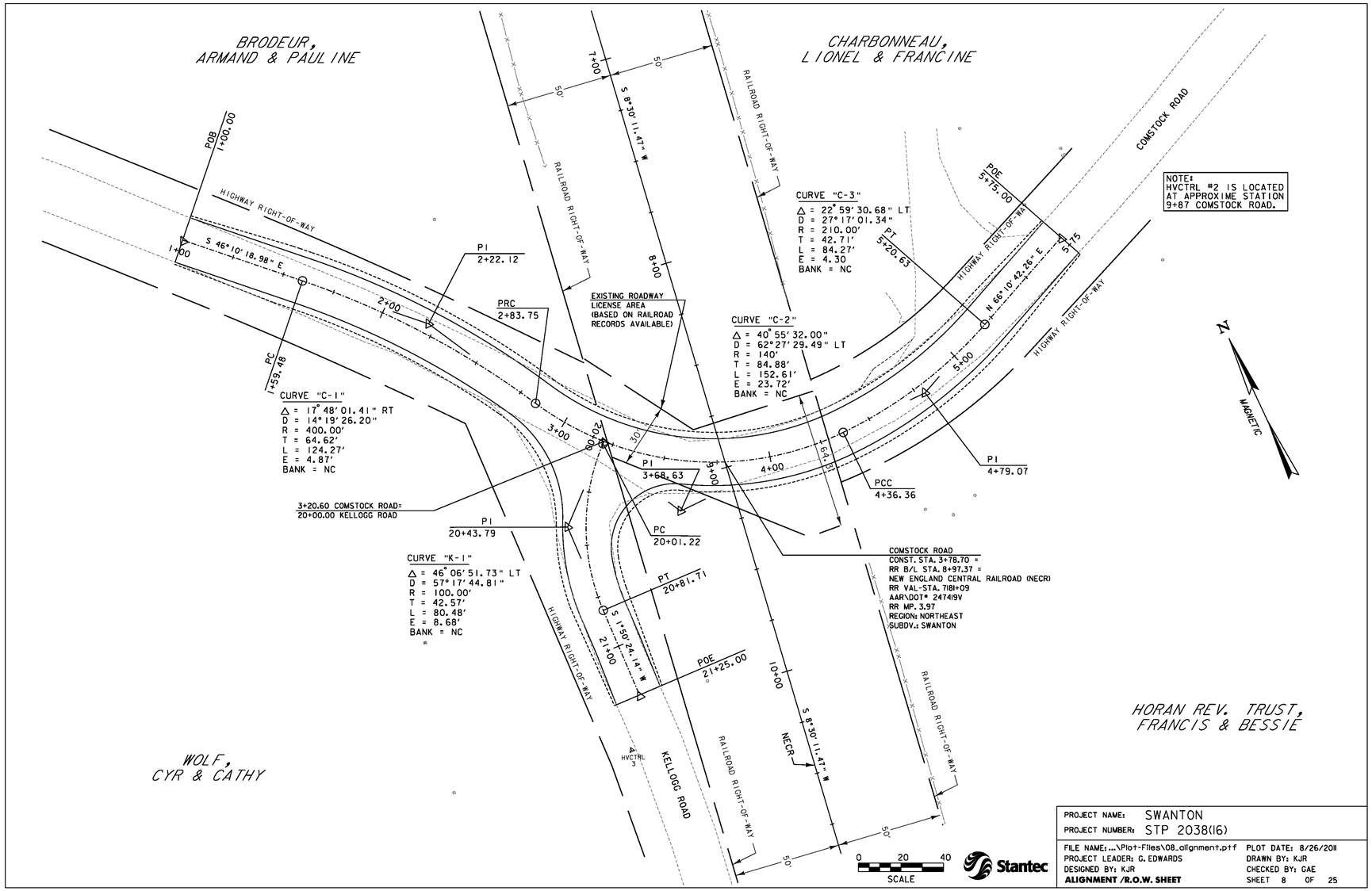

PROJECT NAME: SWANTON	
PROJECT NUMBER: STP 2038(16)	
FILE NAME: ...\Plot-Files\08_alignment.pt f	PLOT DATE: 8/26/2011
PROJECT LEADER: G. EDWARDS	DRAWN BY: KJR
DESIGNED BY: KJR	CHECKED BY: GAE
ALIGNMENT /R.O.W. SHEET	SHEET 8 OF 25

COLD PLANING, BITUMINOUS PAVEMENT (PAID AS ITEM 210.10)
COMSTOCK STA 1+00 - 1+25 COMSTOCK STA 5+50 - 5+75 KELLOGG STA 21+00 - 21+25

CONSTRUCT RESIDENTIAL DRIVEWAY
5+28.0 LT (GRAVEL)

RELOCATE MAILBOX, SINGLE SUPPORT
4+77.5 LT

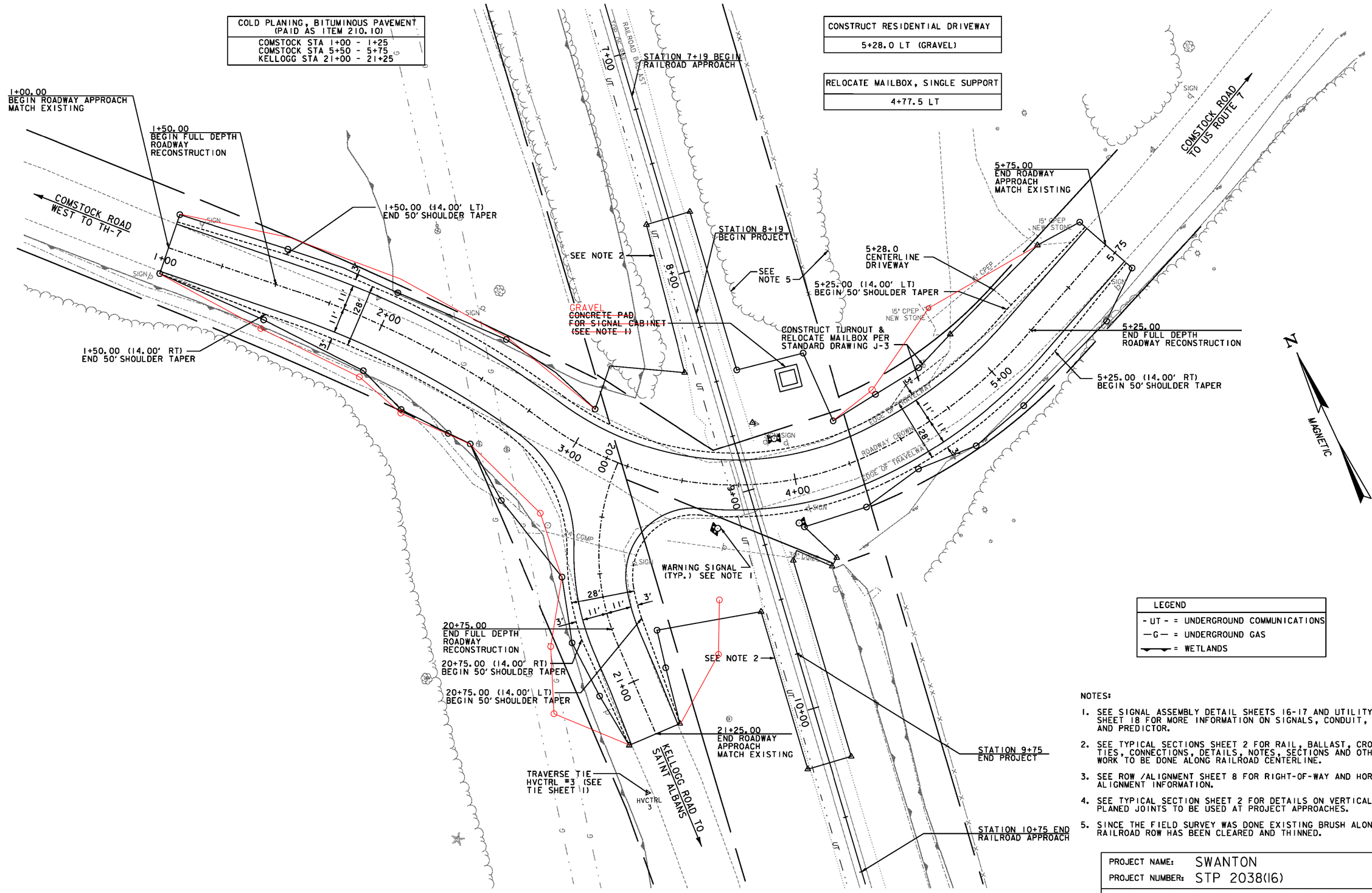

LEGEND	
- UT -	= UNDERGROUND COMMUNICATIONS
—G—	= UNDERGROUND GAS
	= WETLANDS

NOTES:

1. SEE SIGNAL ASSEMBLY DETAIL SHEETS 16-17 AND UTILITY PLAN SHEET 18 FOR MORE INFORMATION ON SIGNALS, CONDUIT, CABINET AND PREDICTOR.
2. SEE TYPICAL SECTIONS SHEET 2 FOR RAIL, BALLAST, CROSS TIES, CONNECTIONS, DETAILS, NOTES, SECTIONS AND OTHER WORK TO BE DONE ALONG RAILROAD CENTERLINE.
3. SEE ROW /ALIGNMENT SHEET 8 FOR RIGHT-OF-WAY AND HORIZONTAL ALIGNMENT INFORMATION.
4. SEE TYPICAL SECTION SHEET 2 FOR DETAILS ON VERTICAL COLD PLANED JOINTS TO BE USED AT PROJECT APPROACHES.
5. SINCE THE FIELD SURVEY WAS DONE EXISTING BRUSH ALONG THE RAILROAD ROW HAS BEEN CLEARED AND THINNED.

0 20 40
SCALE

Stantec

PROJECT NAME: SWANTON
PROJECT NUMBER: STP 2038(16)

FILE NAME: ...\Plot-Files\09_roadway.p+f
PROJECT LEADER: G. EDWARDS
DESIGNED BY: KJR
ROADWAY PLAN

PLOT DATE: 9/9/2011
DRAWN BY: KJR
CHECKED BY: GAE
SHEET 9 OF 25

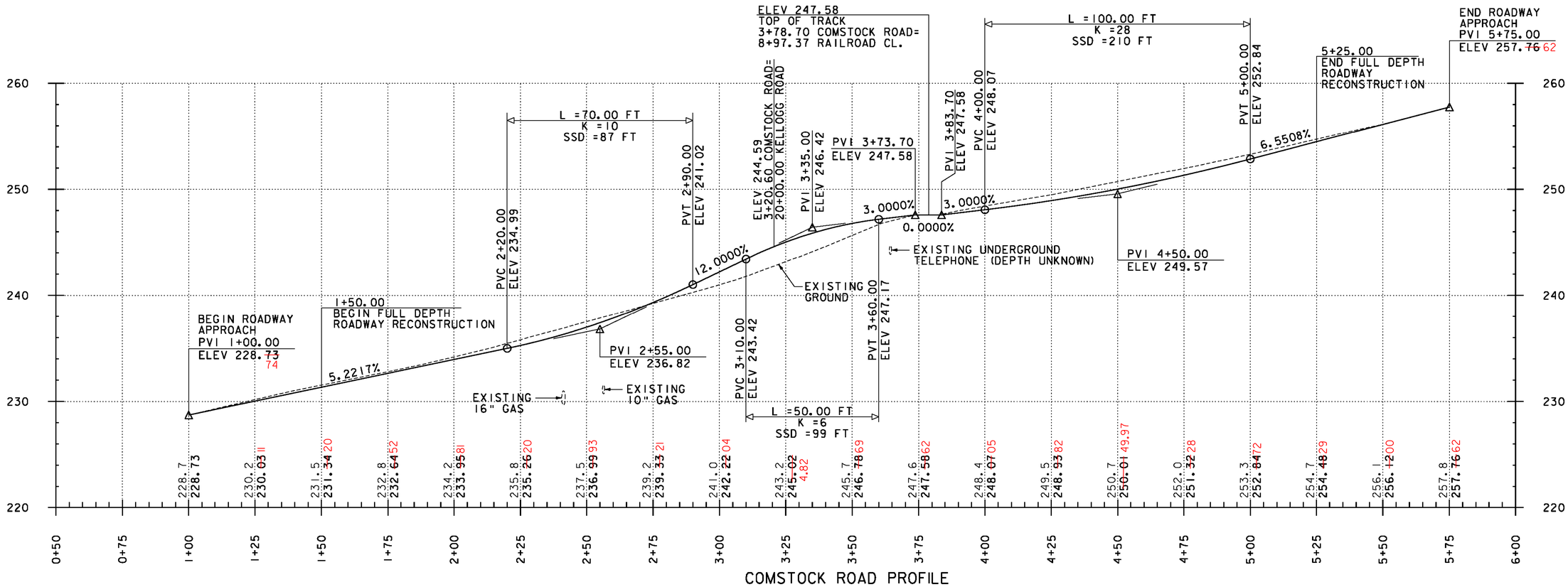

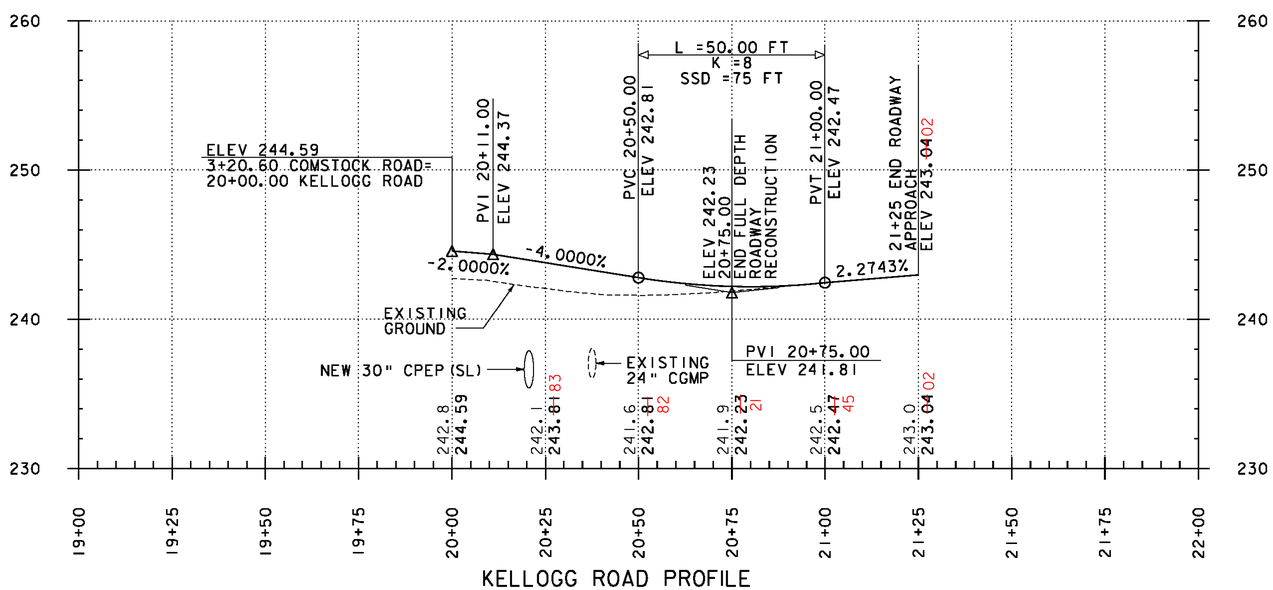

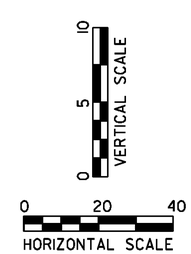

NOTE:

GRADES SHOWN TO THE NEAREST TENTH REPRESENT EXISTING GRADE ELEVATION ALONG THE CENTERLINE OF THE ROADWAY. GRADES SHOWN TO THE NEAREST HUNDREDTH REPRESENT FINISHED GRADE ELEVATION ALONG THE CENTERLINE OF THE ROADWAY.

PROJECT NAME: SWANTON	
PROJECT NUMBER: STP 2038(16)	
FILE NAME: ...\Plot-Files\10_profile.ptf	PLOT DATE: 8/26/2011
PROJECT LEADER: G. EDWARDS	DRAWN BY: KJR
DESIGNED BY: KJR	CHECKED BY: GAE
PROFILE SHEET	SHEET 10 OF 25

Stantec

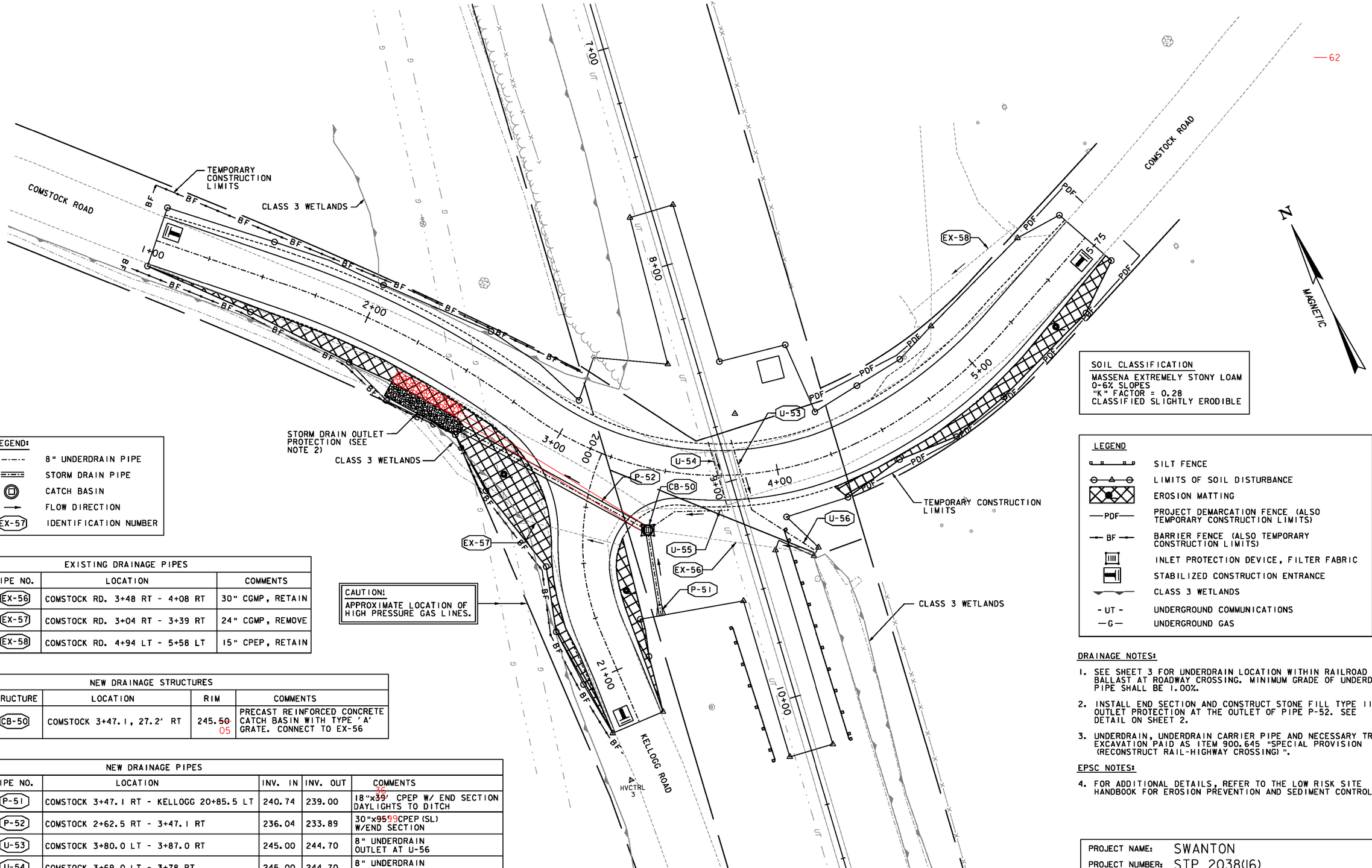

62

LEGEND:

- 8" UNDERDRAIN PIPE
- STORM DRAIN PIPE
- CATCH BASIN
- FLOW DIRECTION
- EX-57 IDENTIFICATION NUMBER

EXISTING DRAINAGE PIPES		
PIPE NO.	LOCATION	COMMENTS
EX-56	COMSTOCK RD. 3+48 RT - 4+08 RT	30" CGMP, RETAIN
EX-57	COMSTOCK RD. 3+04 RT - 3+39 RT	24" CGMP, REMOVE
EX-58	COMSTOCK RD. 4+94 LT - 5+58 LT	15" CPEP, RETAIN

NEW DRAINAGE STRUCTURES			
STRUCTURE	LOCATION	RIM	COMMENTS
CB-50	COMSTOCK 3+47.1, 27.2' RT	245.~~50~~ 05	PRECAST REINFORCED CONCRETE CATCH BASIN WITH TYPE 'A' GRATE. CONNECT TO EX-56

NEW DRAINAGE PIPES				
PIPE NO.	LOCATION	INV. IN	INV. OUT	COMMENTS
P-51	COMSTOCK 3+47.1 RT - KELLOGG 20+85.5 LT	240.74	239.00	18"x~~39'~~ 36' CPEP W/ END SECTION DAYLIGHTS TO DITCH
P-52	COMSTOCK 2+62.5 RT - 3+47.1 RT	236.04	233.89	30"x~~95~~99 CPEP (SL) W/END SECTION
U-53	COMSTOCK 3+80.0 LT - 3+87.0 RT	245.00	244.70	8" UNDERDRAIN OUTLET AT U-56
U-54	COMSTOCK 3+69.0 LT - 3+78 RT	245.00	244.70	8" UNDERDRAIN OUTLET AT U-55
U-55	COMSTOCK 3+47.1 RT - 3+87.0 RT	244.70	243.00	8" UNDERDRAIN CARRIER PIPE OUTLET INTO CB-50
U-56	COMSTOCK 3+87.0 RT - 4+07.2 RT	244.70	244.30	8" UNDERDRAIN CARRIER PIPE OUTLET INTO DITCH

SOIL CLASSIFICATION

MASSENA EXTREMELY STONY LOAM
0-6% SLOPES
"K" FACTOR = 0.28
CLASSIFIED SLIGHTLY ERODIBLE

LEGEND

- SILT FENCE
- LIMITS OF SOIL DISTURBANCE
- EROSION MATTING
- PDF — PROJECT DEMARCATION FENCE (ALSO TEMPORARY CONSTRUCTION LIMITS)
- BF — BARRIER FENCE (ALSO TEMPORARY CONSTRUCTION LIMITS)
- INLET PROTECTION DEVICE, FILTER FABRIC
- STABILIZED CONSTRUCTION ENTRANCE
- CLASS 3 WETLANDS
- UT — UNDERGROUND COMMUNICATIONS
- G — UNDERGROUND GAS

DRAINAGE NOTES:

1. SEE SHEET 3 FOR UNDERDRAIN LOCATION WITHIN RAILROAD BALLAST AT ROADWAY CROSSING. MINIMUM GRADE OF UNDERDRAIN PIPE SHALL BE 1.00%.
2. INSTALL END SECTION AND CONSTRUCT STONE FILL TYPE II OUTLET PROTECTION AT THE OUTLET OF PIPE P-52. SEE DETAIL ON SHEET 2.
3. UNDERDRAIN, UNDERDRAIN CARRIER PIPE AND NECESSARY TRENCH EXCAVATION PAID AS ITEM 900.645 "SPECIAL PROVISION (RECONSTRUCT RAIL-HIGHWAY CROSSING)".

EPSC NOTES:

4. FOR ADDITIONAL DETAILS, REFER TO THE LOW RISK SITE HANDBOOK FOR EROSION PREVENTION AND SEDIMENT CONTROL.

PROJECT NAME: SWANTON
PROJECT NUMBER: STP 2038(16)

FILE NAME: ...\Plot-Files\11_drainage.ptf
PROJECT LEADER: G. EDWARDS
DESIGNED BY: KJR
DRAINAGE PLAN

PLOT DATE: 8/31/2011
DRAWN BY: KJR
CHECKED BY: GAE
SHEET 11 OF 25

646.21 4 INCH YELLOW LINE

STA. 1+00 TO STA. 3+00, SOLID ℄ DOUBLE YELLOW
STA. 3+40 TO STA. 5+75, SOLID ℄ DOUBLE YELLOW
STA. 20+15 TO STA. 21+25, SOLID ℄ DOUBLE YELLOW

646.26 24 INCH STOP BAR.

STA. 20+15, LT.
STA. 3+53, RT.
STA. 4+03, LT.

646.32 RAILROAD CROSSING SYMBOL

STA. 2+00, RT.
STA. 5+90, LT.

675.60 ERECTING SALVAGED SIGNS

STA. 20+40, LT.

675.50 REMOVING SIGNS

STA. 1+00, RT.
STA. 3+60, RT.
STA. 3+90, RT.
STA. 4+00, LT.
STA. 4+00, RT.
STA. 5+70, RT.
STA. 6+50, LT.
STA. 7+00, LT.
STA. 20+40, LT.

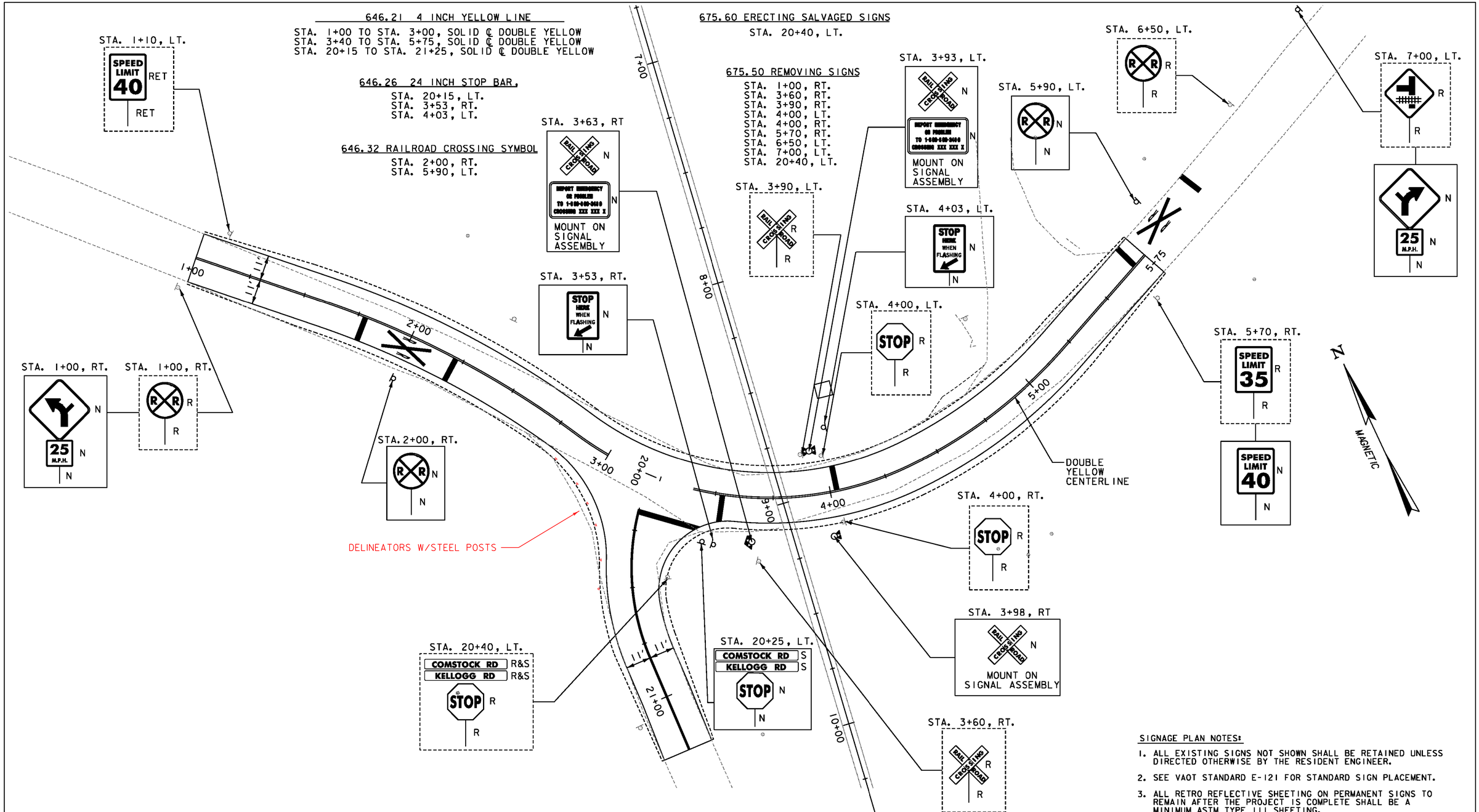

SIGN LEGEND

N	= NEW
R	= REMOVE
R&S	= REMOVE & SALVAGE
S	= SALVAGE SIGN
RET	= RETAIN
	= BACK TO BACK
----	= EXISTING
——	= PROPOSED

0 20 40
SCALE

Stantec

SIGNAGE PLAN NOTES:

1. ALL EXISTING SIGNS NOT SHOWN SHALL BE RETAINED UNLESS DIRECTED OTHERWISE BY THE RESIDENT ENGINEER.
2. SEE VAOT STANDARD E-121 FOR STANDARD SIGN PLACEMENT.
3. ALL RETRO REFLECTIVE SHEETING ON PERMANENT SIGNS TO REMAIN AFTER THE PROJECT IS COMPLETE SHALL BE A MINIMUM ASTM TYPE III SHEETING.
4. ALL EXISTING SIGNS TO BE REMOVED SHALL BE RETURNED TO THE TOWN OF SWANTON.
5. SEE THE SPECIAL PROVISIONS FOR ADDITINAL INFORMATION AND REQUIREMENTS.

PROJECT NAME: SWANTON
PROJECT NUMBER: STP 2038(16)

FILE NAME: ...\14_signs and lines.pt f
PROJECT LEADER: G. EDWARDS
DESIGNED BY: GAE
SIGNING & PAVEMENT MARKINGS

PLOT DATE: 8/29/2011
DRAWN BY: RAW
CHECKED BY: GAE
SHEET 13 OF 25

STATE OF VERMONT
AGENCY OF TRANSPORTATION

TRAFFIC SIGN SUMMARY SHEET

MILEMARKER, STATION, OR SIGN NUMBER	SIGN LEGEND	SIGN DIMENSIONS EA	SIGN DIMENSIONS WIDTH (in.)	SIGN DIMENSIONS HEIGHT (in.)	NEW & SALVAGED SIGNS "A"	NEW & SALVAGED SIGNS "B"	NEW & SALVAGED SIGNS SALV SIGN	NEW & SALVAGED SIGNS SALV TIS	EXIST POST RETAIN	EXIST POST SALVAGE	NEW SIGN POSTS NO. OF POSTS	FLANGED CHANNEL lb/ft 1.12	FLANGED CHANNEL lb/ft 2.0	FLANGED CHANNEL lb/ft 3.0	12 GUAGE SQUARE STEEL (in.) lb/ft 1.75	12 GUAGE SQUARE STEEL (in.) lb/ft 2.0	12 GUAGE SQUARE STEEL (in.) lb/ft 2.5	ANCHOR	SLEEVE	TUBULAR ALUMINUM dia. (in.) lb/ft 3.0	TUBULAR ALUMINUM dia. (in.) lb/ft 4.0	TUBULAR ALUMINUM dia. (in.) lb/ft 4.0 MOD.	FOUNDATION	TUBULAR STEEL dia. (in.) lb/ft 3.0	TUBULAR STEEL dia. (in.) lb/ft 3.5	TUBULAR STEEL dia. (in.) lb/ft 4.0	TUBULAR STEEL dia. (in.) lb/ft 5.0	W-SHAPE STEEL FTG. SIZE 24"	W-SHAPE STEEL FTG. SIZE 30"	W-SHAPE STEEL WEIGHT	W-SHAPE STEEL POST SIZE	SIGN FRAME REQUIRED	REMARKS	STD. SHEET NUMBER
											OPTION ITEMS																								
STA. 1+00, RT. COMSTOCK ROAD		1 1	30 18	30 18	6.25 2.25						1					17.0 ~~12.3~~		1															W1-10L ANCHORS SHALL BE PAID INCIDENTIAL TO SIGN POST PAY ITEM, TYPICAL FOR ALL SIGNS W13-1	SHS SHS
STA. 2+00, RT. COMSTOCK ROAD		1	36	36	9						1					14.5 ~~13.1~~		1															W10-1	SHS
STA. 3+53, RT. COMSTOCK ROAD		1	24	36	6						1					13.75 ~~12.3~~																	R8-10	SHS
STA. 4+03, LT. COMSTOCK ROAD		1	24	36	6						1					14.0 ~~12.3~~																	R8-10	SHS
STA. 5+70, RT. COMSTOCK ROAD		1	24	30	5						1					17.0 ~~13.1~~		1															R2-1	SHS
STA. 5+90, LT. COMSTOCK ROAD		1	36	36	9						1					14.5 ~~13.1~~		1															W10-1	SHS
STA. 7+00, LT COMSTOCK ROAD		1 1	30 18	30 18	6.25 2.25						1					16.5 ~~12.3~~		1															W1-10R W13-1	SHS SHS
STA. 20+25, LT. KELLOGG ROAD		1	30	30	6.25		1 1				1					13.5 ~~13.1~~		1															SALVAGED SIGNS ON NEW POST WITH STOP SIGN AT 20+25 R1-1	SHS
												FT	FT	FT	FT	FT 120.75 ~~101.6~~	FT		EA	LB	LB	LB		LB	LB	LB	LB							
TOTALS		SF 58.25	SF	EA 2	SF							FT			FT 101.6 120.75					LB			EA	LB				EA	EA	LB				

FINAL POST LENGTHS ARE TO BE DETERMINED IN THE FIELD. POST SIZES ARE COMPUTED BASED ON INFORMATION FURNISHED ON THE STANDARD SHEETS AND THE VTRANS "SIGN POST DESIGN GUIDELINE."

Stantec

PROJECT NAME: SWANTON
PROJECT NUMBER: STP 2038(16)

FILE NAME: ...\Plot-Files\16_Sign_Summary.pt PLOT DATE: 8/26/2011
PROJECT LEADER: G. EDWARDS DRAWN BY: KJR
DESIGNED BY: KJR CHECKED BY: GAE
TRAFFIC SIGN SUMMARY SHEET 1 SHEET 14 OF 25

STATE OF VERMONT
AGENCY OF TRANSPORTATION

TRAFFIC SIGN SUMMARY SHEET

MILEMARKER, STATION, OR SIGN NUMBER	SIGN LEGEND	SIGN DIMENSIONS			NEW & SALVAGED SIGNS				EXIST POST		NEW SIGN POSTS																					REMARKS	STD. SHEET NUMBER
											NO. OF POSTS	FLANGED CHANNEL			12 GUAGE SQUARE STEEL (in.)			ANCHOR	SLEEVE	TUBULAR ALUMINUM dia. (in.)			TUBULAR STEEL dia. (in.)				W-SHAPE STEEL FTG. SIZE				SIGN FRAME REQUIRED		
		EA	WIDTH (in.)	HEIGHT (in.)	"A"	"B"	SALV SIGN	SALV TIS	RETAIN	SALVAGE		lb/ft			1.75	2.0	2.5			3.0	4.0	4.0 MOD.	FOUNDATION	3.0	3.5	4.0	5.0	24"	30"	WEIGHT	POST SIZE			
												1.12	2.0	3.0	1.88	2.42	3.35			1.3	1.7	1.7		7.6	9.0	10.8	14.6							
											OPTION ITEMS																						
SIGNAL ASSEMBLY G1 STA. 3+63, RT. COMSTOCK ROAD		2	48	9	6																											REQUIRES SHEETING ON BOTH FRONT AND BACK INSTEAD OF JUST RETROREFLECTIVE STRIPE ON BACK. SIGNS SEPARATED FROM LUMP SUM. R15-1	SHS
SIGNAL ASSEMBLY G2 STA.3+93, LT. COMSTOCK ROAD		2	48	9	6																											REQUIRES SHEETING ON BOTH FRONT AND BACK INSTEAD OF JUST RETROREFLECTIVE STRIPE ON BACK. SIGNS SEPARATED FROM LUMP SUM. R15-1	SHS
SIGNAL ASSEMBLY G3 STA. 3+98, RT. COMSTOCK ROAD		2	48	9	6																											REQUIRES SHEETING ON BOTH FRONT AND BACK INSTEAD OF JUST RETROREFLECTIVE STRIPE ON BACK. SIGNS SEPARATED FROM LUMP SUM. R15-1	SHS
SIGNAL ASSEMBLY G1 STA. 3+63, RT. COMSTOCK ROAD		1	12	9	0.75																											TO BE MOUNTED ON THE SIGNAL MAST	ES1024X.0
SIGNAL ASSEMBLY G2 STA.3+93, LT. COMSTOCK ROAD		1	12	9	0.75																											TO BE MOUNTED ON THE SIGNAL MAST	ES1024X.0
	TOTALS THIS SHEET				19.5		0									0																	
	TOTALS SHEET 1				58.25		2									101.6																	
	ROUNDING				~~0.25~~							FT	FT	FT	FT	FT ~~0.4~~ ~~101.6~~	FT		EA	LB	LB	LB		LB	LB	LB	LB						
	TOTALS				SF 77.75 ~~78.00~~	SF	EA 2	SF				FT				FT ~~102.0~~ 120.75				LB			EA	LB				EA	EA	LB			

FINAL POST LENGTHS ARE TO BE DETERMINED IN THE FIELD. POST SIZES ARE COMPUTED BASED ON INFORMATION FURNISHED ON THE STANDARD SHEETS AND THE VTRANS "SIGN POST DESIGN GUIDELINE."

Stantec

PROJECT NAME: SWANTON
PROJECT NUMBER: STP 2038(16)

FILE NAME: ...\Plot-Files\17_Sign_Summary.pt PLOT DATE: 8/29/2011
PROJECT LEADER: G. EDWARDS DRAWN BY: KJR
DESIGNED BY: KJR CHECKED BY: GAE
TRAFFIC SIGN SUMMARY SHEET 2 SHEET 15 OF 25

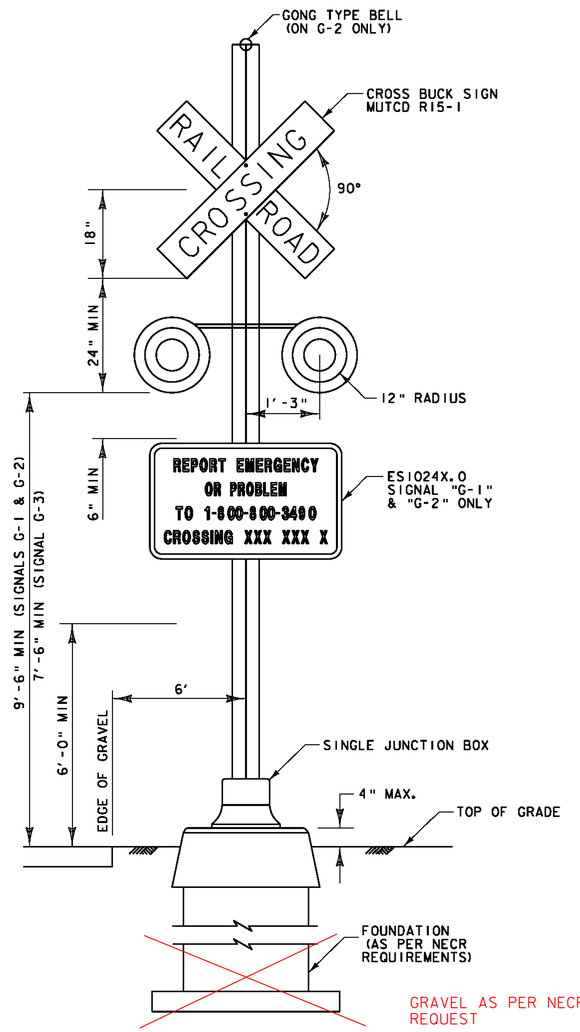

ROADWAY VIEW

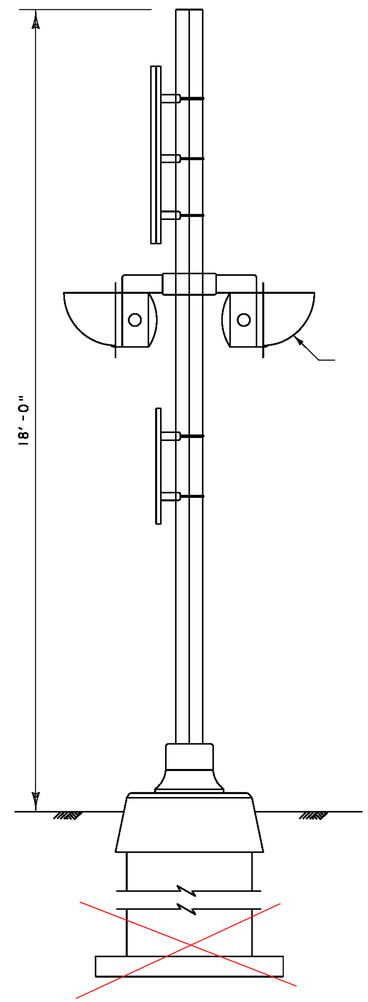

SIDE VIEW

SIGNAL ASSEMBLY G-1 (G-2 & G-3 SIMILAR)

NOT TO SCALE

QTY	DESCRIPTION
1	ELECTRIC BELL
3	GATE FOUNDATION
6	CROSS BUCK SIGN
2	4-WAY LED LIGHT
1	2-WAY LED LIGHT
2	1-WAY TREE
4	POLE (5" MAST) 18'
4	CROSS ARM
2	"REPORT EMERGENCY" SIGN

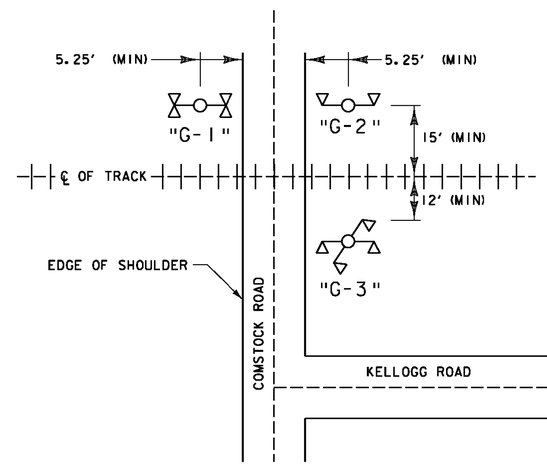

SIGNAL ASSEMBLY PLAN

NOT TO SCALE

NOTES:

1. A STRIP OF ASTM TYPE III OR TYPE V RETROREFLECTIVE WHITE MATERIAL NOT LESS THAN 2 INCHES IN WIDTH, SHALL BE USED ON EACH SUPPORT AT HIGHWAY-RAIL GRADE CROSSING FOR THE FULL LENGTH OF THE FRONT AND BACK OF THE SUPPORT FROM THE CROSSBUCK SIGN TO NEAR GROUND LEVEL.

Stantec

PROJECT NAME: SWANTON	
PROJECT NUMBER: STP 2038(16)	
FILE NAME: ...\18_signal_assembly_details.pt	PLOT DATE: 8/26/2011
PROJECT LEADER: G. EDWARDS	DRAWN BY: KJR
DESIGNED BY: STANTEC	CHECKED BY: GAE
SIGNAL ASSEMBLY DETAILS 1	SHEET 16 OF 25

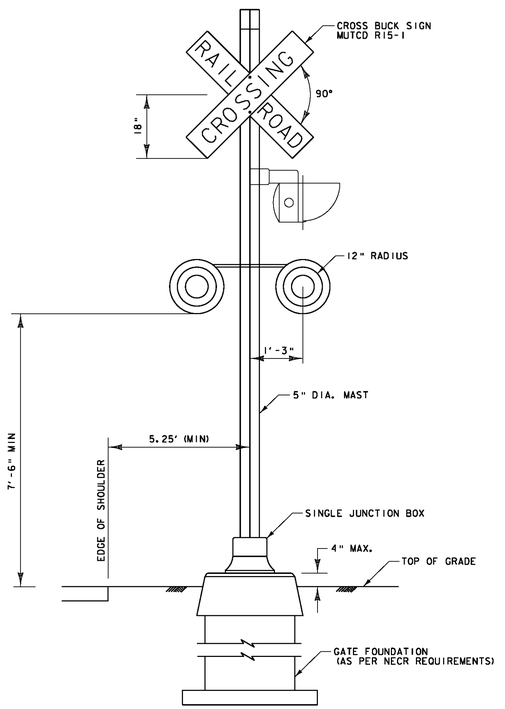

ROADWAY VIEW

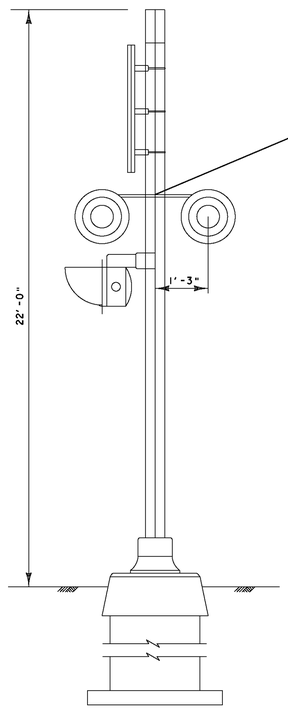

SIDE VIEW (KELLOGG ROAD)

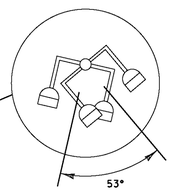

PLAN VIEW

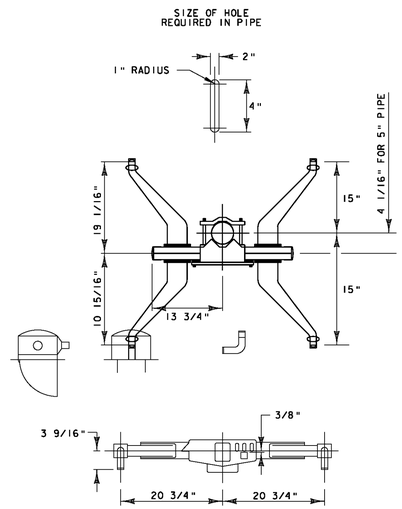

TYPICAL LAMP CROSSARM WITH BRACKETS

NOT TO SCALE

SIGNAL ASSEMBLY G-3

NOT TO SCALE

PROJECT NAME: SWANTON	
PROJECT NUMBER: STP 2038(16)	
FILE NAME: ...\18_signal_assembly_details.pt1	PLOT DATE: 8/31/2011
PROJECT LEADER: G. EDWARDS	DRAWN BY: KJR
DESIGNED BY: STANTEC	CHECKED BY: GAE
SIGNAL ASSEMBLY DETAILS 2	SHEET 17 OF 25

Stantec

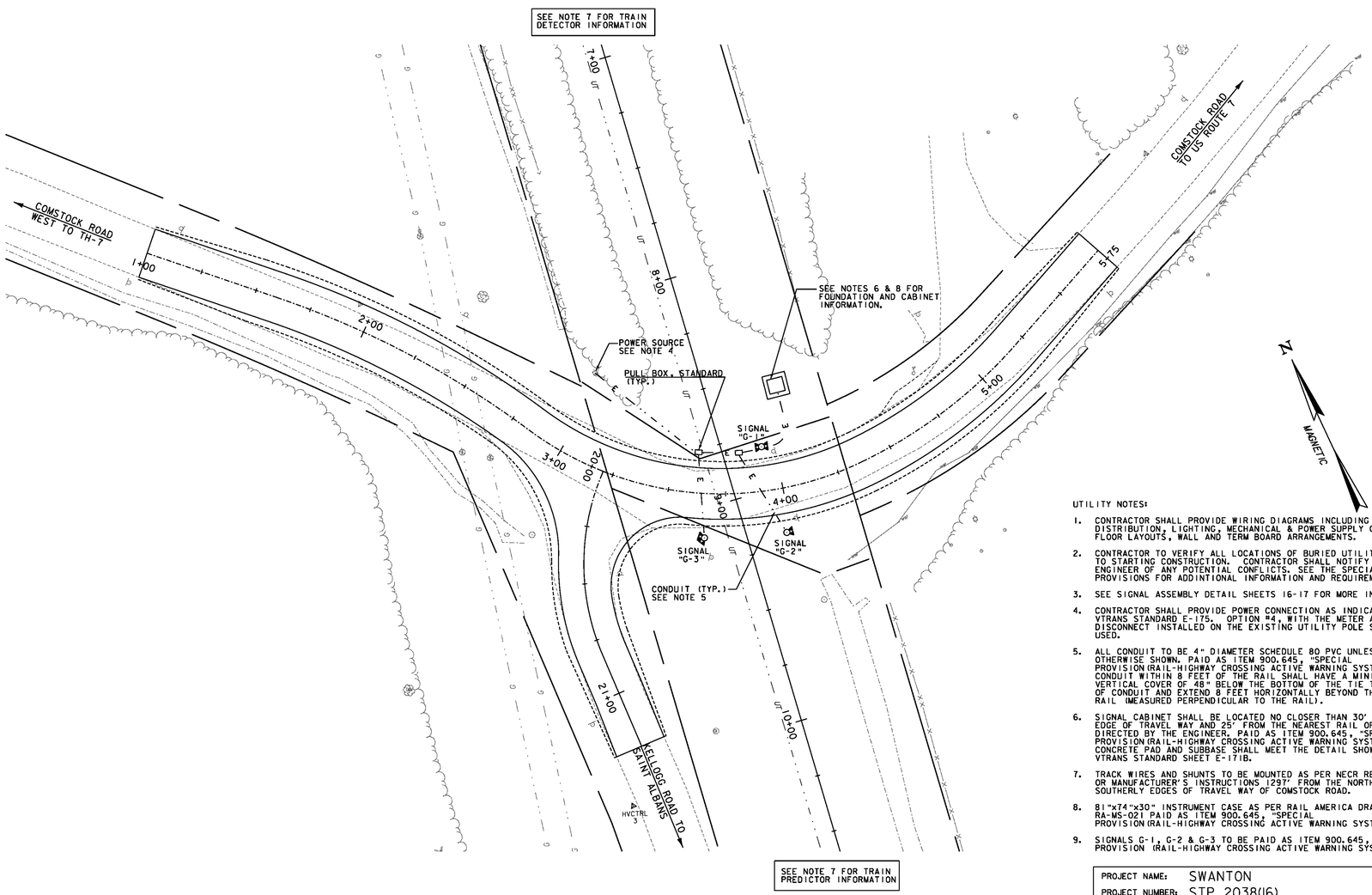

UTILITY NOTES:

1. CONTRACTOR SHALL PROVIDE WIRING DIAGRAMS INCLUDING POWER DISTRIBUTION, LIGHTING, MECHANICAL & POWER SUPPLY CIRCUITS, FLOOR LAYOUTS, WALL AND TERM BOARD ARRANGEMENTS.
2. CONTRACTOR TO VERIFY ALL LOCATIONS OF BURIED UTILITIES PRIOR TO STARTING CONSTRUCTION. CONTRACTOR SHALL NOTIFY VTRANS AND ENGINEER OF ANY POTENTIAL CONFLICTS. SEE THE SPECIAL PROVISIONS FOR ADDINTIONAL INFORMATION AND REQUIREMENTS
3. SEE SIGNAL ASSEMBLY DETAIL SHEETS 16-17 FOR MORE INFORMATION.
4. CONTRACTOR SHALL PROVIDE POWER CONNECTION AS INDICATED ON VTRANS STANDARD E-175. OPTION #4, WITH THE METER AND DISCONNECT INSTALLED ON THE EXISTING UTILITY POLE SHALL BE USED.
5. ALL CONDUIT TO BE 4" DIAMETER SCHEDULE 80 PVC UNLESS OTHERWISE SHOWN. PAID AS ITEM 900.645, "SPECIAL PROVISION(RAIL-HIGHWAY CROSSING ACTIVE WARNING SYSTEM)". ALL CONDUIT WITHIN 8 FEET OF THE RAIL SHALL HAVE A MINIMUM VERTICAL COVER OF 48" BELOW THE BOTTOM OF THE TIE TO THE TOP OF CONDUIT AND EXTEND 8 FEET HORIZONTALLY BEYOND THE NEAR RAIL (MEASURED PERPENDICULAR TO THE RAIL).
6. SIGNAL CABINET SHALL BE LOCATED NO CLOSER THAN 30' FROM THE EDGE OF TRAVEL WAY AND 25' FROM THE NEAREST RAIL OR AS DIRECTED BY THE ENGINEER. PAID AS ITEM 900.645, "SPECIAL PROVISION(RAIL-HIGHWAY CROSSING ACTIVE WARNING SYSTEM)". CONCRETE PAD AND SUBBASE SHALL MEET THE DETAIL SHOWN ON VTRANS STANDARD SHEET E-171B.
7. TRACK WIRES AND SHUNTS TO BE MOUNTED AS PER NECR REQUIREMENTS OR MANUFACTURER'S INSTRUCTIONS 1297' FROM THE NORTHERLY AND SOUTHERLY EDGES OF TRAVEL WAY OF COMSTOCK ROAD.
8. 81"x74"x30" INSTRUMENT CASE AS PER RAIL AMERICA DRAWING RA-MS-021 PAID AS ITEM 900.645, "SPECIAL PROVISION(RAIL-HIGHWAY CROSSING ACTIVE WARNING SYSTEM)"
9. SIGNALS G-1, G-2 & G-3 TO BE PAID AS ITEM 900.645, "SPECIAL PROVISION (RAIL-HIGHWAY CROSSING ACTIVE WARNING SYSTEM)"

PROJECT NAME: SWANTON	
PROJECT NUMBER: STP 2038(16)	
FILE NAME: ...\Plot-Files\20_utility.pltf	PLOT DATE: 9/9/2011
PROJECT LEADER: G. EDWARDS	DRAWN BY: KJR
DESIGNED BY: KJR	CHECKED BY: GAE
UTILITY PLAN	SHEET 18 OF 25

Stantec

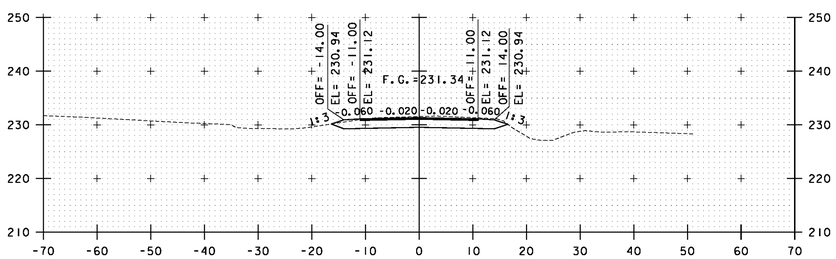

1+50

BEGIN FULL DEPTH
ROADWAY RECONSTRUCTION

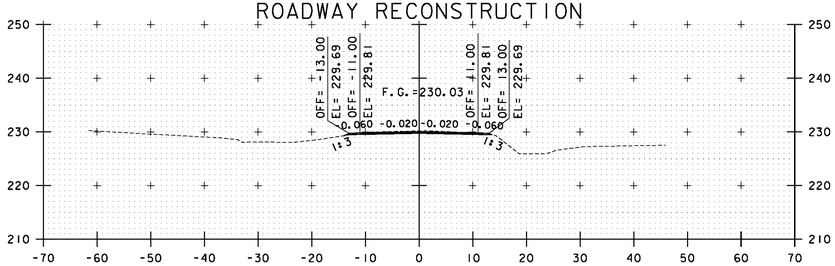

1+25

BEGIN SUBBASE TRANSITION

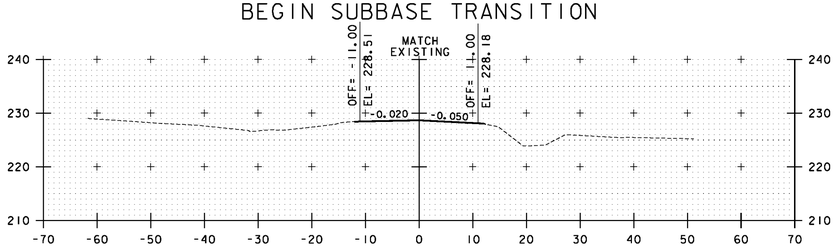

1+00

BEGIN ROADWAY APPROACH

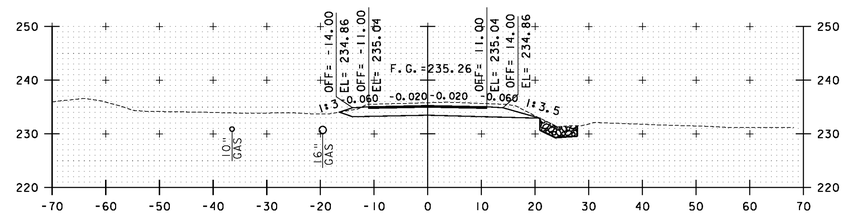

2+25

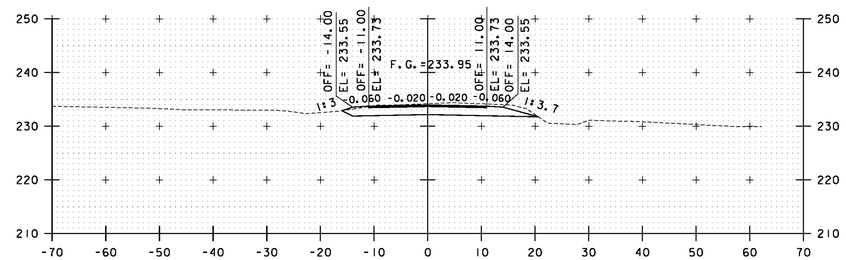

2+00

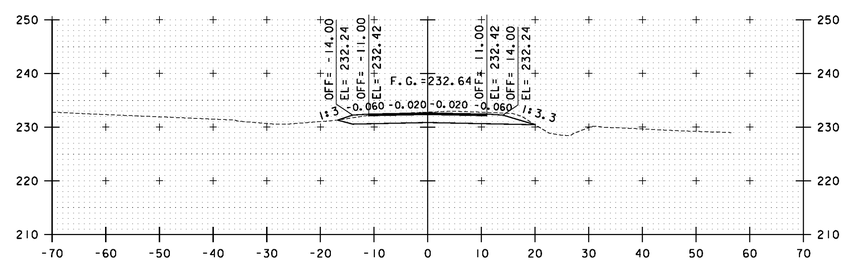

1+75

STA. 1+00 TO STA. 2+25

0 10 20
SCALE

Stantec

PROJECT NAME: SWANTON	
PROJECT NUMBER: STP 2038(16)	
FILE NAME: ...\27_Cross_Sections.ptf	PLOT DATE: 8/26/2011
PROJECT LEADER: G. EDWARDS	DRAWN BY: KJR
DESIGNED BY: KJR	CHECKED BY: GAE
COMSTOCK ROAD CROSS SECTIONS 1	SHEET 19 OF 25

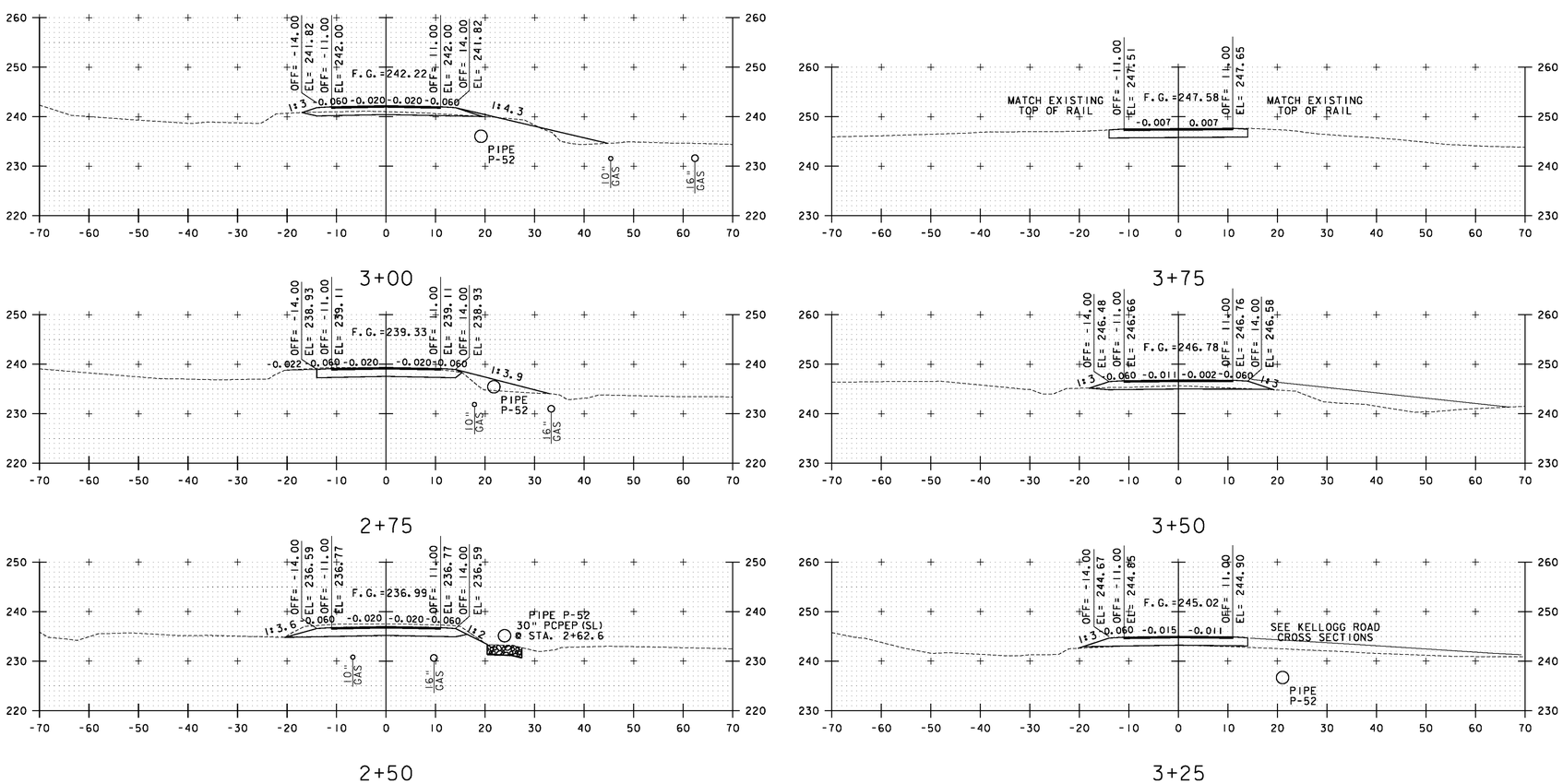

STA. 2+50 TO STA. 3+75

PROJECT NAME: SWANTON
PROJECT NUMBER: STP 2038(16)

FILE NAME: ...\27_Cross_Sections.ptf
PROJECT LEADER: G. EDWARDS
DESIGNED BY: KJR
COMSTOCK ROAD CROSS SECTIONS 2

PLOT DATE: 8/26/2011
DRAWN BY: KJR
CHECKED BY: GAE
SHEET 20 OF 25

0 10 20
SCALE

Stantec

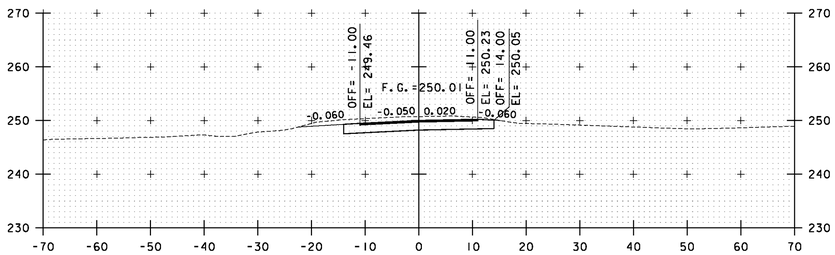

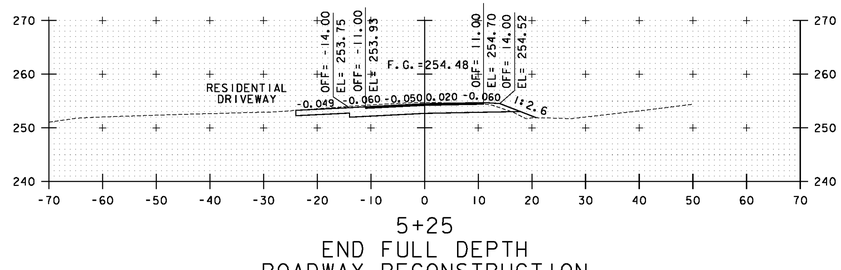

5+25
END FULL DEPTH
ROADWAY RECONSTRUCTION

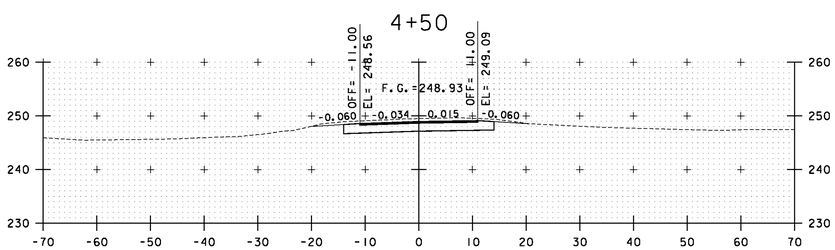

4+50

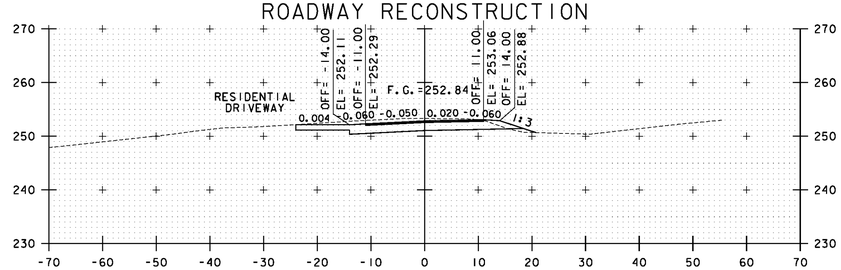

5+00

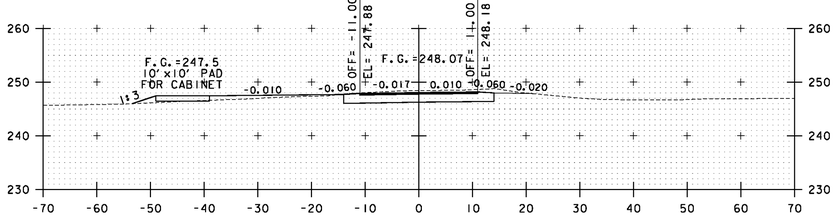

4+00

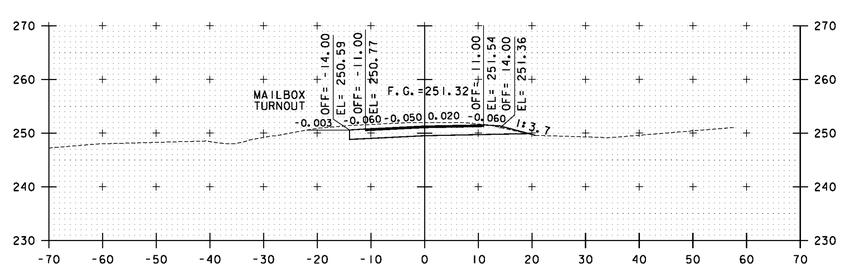

4+75

STA. 4+00 TO STA. 5+25

PROJECT NAME: SWANTON
PROJECT NUMBER: STP 2038(16)

FILE NAME: ...\27_Cross_Sections.ptf
PROJECT LEADER: G. EDWARDS
DESIGNED BY: KJR
COMSTOCK ROAD CROSS SECTIONS 3

PLOT DATE: 8/26/2011
DRAWN BY: KJR
CHECKED BY: GAE
SHEET 21 OF 25

0 10 20
SCALE

Stantec

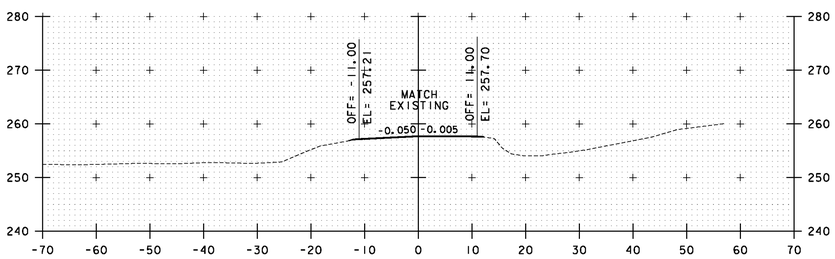

5+75
END ROADWAY APPROACH

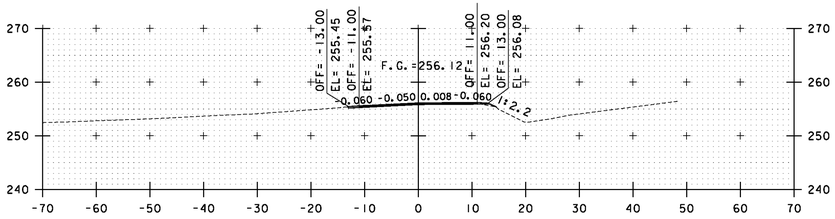

5+50
END SUBBASE TRANSITION

0 10 20
SCALE

Stantec

STA. 5+50 TO STA. 5+75

PROJECT NAME: SWANTON
PROJECT NUMBER: STP 2038(16)

FILE NAME: ...\27_Cross_Sections.ptf
PROJECT LEADER: G. EDWARDS
DESIGNED BY: KJR
COMSTOCK ROAD CROSS SECTIONS 4

PLOT DATE: 8/26/2011
DRAWN BY: KJR
CHECKED BY: GAE
SHEET 22 OF 25

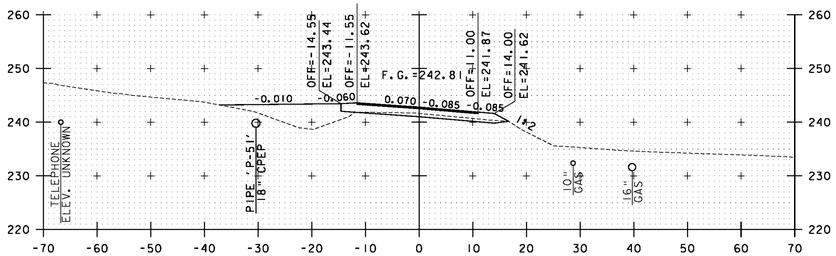

20+50

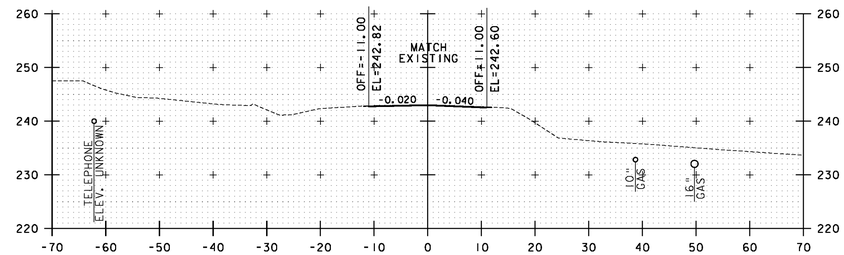

21+25
END ROADWAY APPROACH

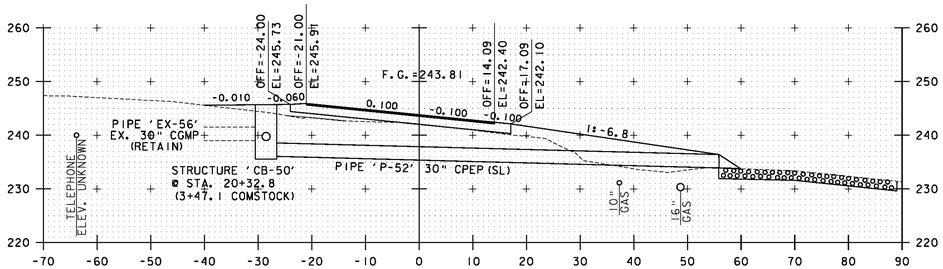

20+25
20+11 MATCH COMSTOCK ROAD
PROPOSED EDGE OF PAVEMENT

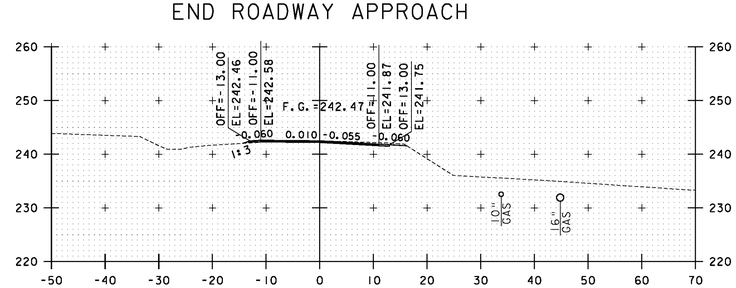

21+00
END SUBBASE TRANSITION

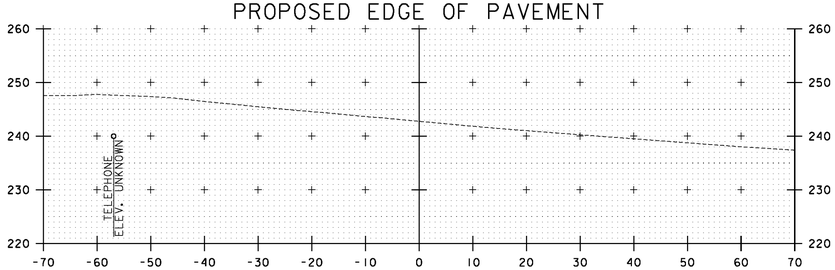

20+00

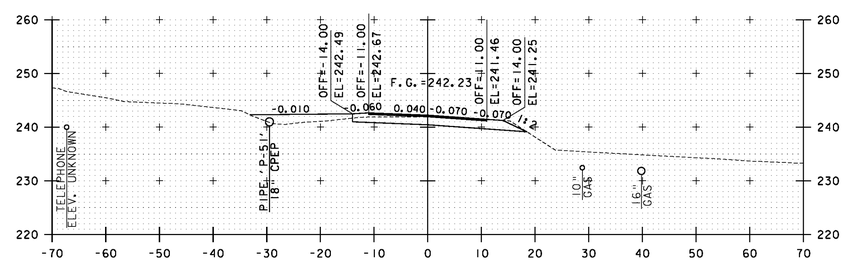

20+75
END FULL DEPTH
ROADWAY
RECONSTRUCTION

STA. 20+00 TO STA. 21+25

0 10 20
SCALE

Stantec

PROJECT NAME: SWANTON	
PROJECT NUMBER: STP 2038(16)	
FILE NAME: ...\27_Cross_Sections.pt f	PLOT DATE: 9/9/2011
PROJECT LEADER: G. EDWARDS	DRAWN BY: KJR
DESIGNED BY: KJR	CHECKED BY: GAE
KELLOGG ROAD CROSS SECTIONS	SHEET 23 OF 25

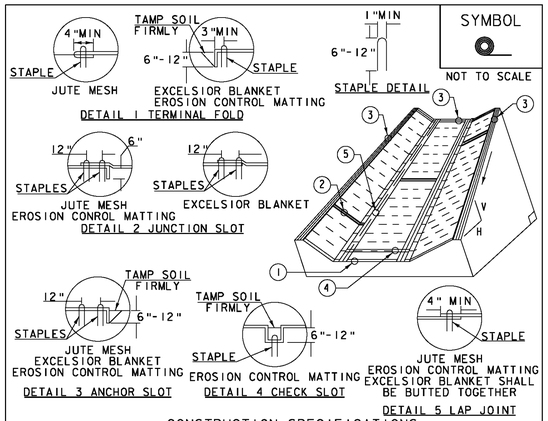

CONSTRUCTION SPECIFICATIONS

1. EROSION MATTING, CHECK SLOTS, SHALL BE SPACED IN DITCH CHANNEL SO THAT ONE OCCURS WITHIN EACH 50' ON SLOPES OF MORE THAN 4% AND LESS THAN 6%. ON SLOPES OF 6% OR MORE, THEY SHALL BE SPACED SO THAT ONE OCCURS WITHIN EACH 25'.
2. APPLY FERTILIZER, LIME SEED PRIOR TO PLACING MATTING.
3. STAPLES ARE TO BE PLACED ALTERNATELY, IN COLUMNS APPROXIMATELY 2' APART AND IN ROWS APPROXIMATELY 3' APART. APPROXIMATELY 175 STAPLES ARE REQUIRED PER 4'X225' ROLL OF MATERIAL AND 125 STAPLES ARE REQUIRED PER 4'X150' ROLL OF MATERIAL.
4. DISTURBED AREAS SHALL BE SMOOTHLY GRADED. EROSION CONTROL MATERIAL SHALL BE PLACED LOOSELY OVER GROUND SURFACE. DO NOT STRETCH.
5. ALL TERMINAL ENDS AND TRANSVERSE LAPS SHALL BE STAPLED AT APPROXIMATELY 12" INTERVALS.

ADAPTED FROM DETAILS PROVIDED BY: NEW YORK STATE DEC
ORIGINALLY DEVELOPED BY USDA-NRCS
VERMONT DEPARTMENT OF ENVIRONMENTAL CONSERVATION

ROLLED EROSION CONTROL PRODUCT (RECP) DITCH

NOTES:
REFER TO "THE VERMONT STANDARDS & SPECIFICATIONS FOR EROSION PREVENTION & SEDIMENT CONTROL -2006- "FROM THE VT AGENCY OF NATURAL RESOURCES FOR ADDITIONAL GUIDANCE.
THIS WORK SHALL BE PERFORMED IN ACCORDANCE WITH SECTION 653 AND AS SHOWN IN THE PLANS FOR TEMPORARY EROSION MATTING (PAY ITEM 653.20) OR PERMANENT EROSION MATTING (PAY ITEM 653.21).

REVISIONS	
MARCH 8, 2007	JMF
APRIL 16, 2007	WHF
JANUARY 13, 2009	WHF

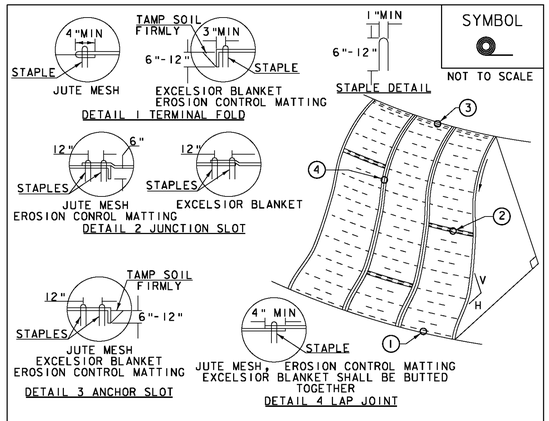

CONSTRUCTION SPECIFICATIONS

1. APPLY TO SLOPES GREATER THAN 3H: 1V OR WHERE NECESSARY TO AID IN ESTABLISHING VEGETATION.
2. APPLY FERTILIZER, LIME SEED PRIOR TO PLACING MATTING.
3. STAPLES ARE TO BE PLACED ALTERNATELY, IN COLUMNS APPROXIMATELY 2' APART AND IN ROWS APPROXIMATELY 3' APART. APPROXIMATELY 175 STAPLES ARE REQUIRED PER 4'X225' ROLL OF MATERIAL AND 125 STAPLES ARE REQUIRED PER 4'X150' ROLL OF MATERIAL.
4. DISTURBED AREAS SHALL BE SMOOTHLY GRADED. EROSION CONTROL MATERIAL SHALL BE PLACED LOOSELY OVER GROUND SURFACE. DO NOT STRETCH.
5. ALL TERMINAL ENDS AND TRANSVERSE LAPS SHALL BE STAPLED AT APPROXIMATELY 12" INTERVALS.

ADAPTED FROM DETAILS PROVIDED BY: NEW YORK STATE DEC
ORIGINALLY DEVELOPED BY USDA-NRCS
VERMONT DEPARTMENT OF ENVIRONMENTAL CONSERVATION

ROLLED EROSION CONTROL PRODUCT (RECP) SIDE SLOPE

NOTES:
REFER TO "THE VERMONT STANDARDS & SPECIFICATIONS FOR EROSION PREVENTION & SEDIMENT CONTROL -2006- "FROM THE VT AGENCY OF NATURAL RESOURCES FOR ADDITIONAL GUIDANCE.
THIS WORK SHALL BE PERFORMED IN ACCORDANCE WITH SECTION 653 AND AS SHOWN IN THE PLANS FOR TEMPORARY EROSION MATTING (PAY ITEM 653.20) ~~OR PERMANENT EROSION MATTING (PAY ITEM 653.21).~~

REVISIONS	
APRIL 16, 2007	JMF
JANUARY 13, 2009	WHF

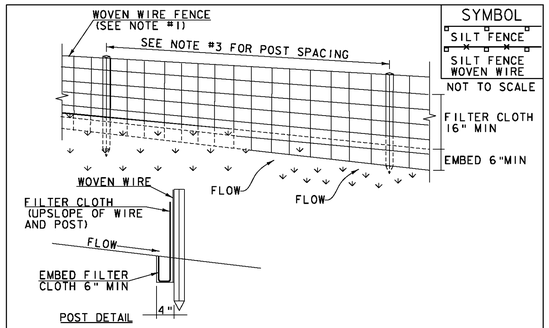

CONSTRUCTION SPECIFICATIONS

1. WOVEN WIRE REINFORCED FENCE IS REQUIRED WITHIN 100' UPSLOPE OF RECEIVING WATERS WHEN THE PROJECT FALLS UNDER A CONSTRUCTION STORMWATER PERMIT. WOVEN WIRE SHALL BE A MIN. 14 GAUGE WITH A 6" MAX. MESH OPENING.
2. FILTER CLOTH SHALL BE EITHER FILTER X, MIRAFI100X, STABILINKA T140N OR APPROVED EQUIVALENT.
3. POST SPACING FOR WIRE-BACKED FENCE SHALL BE 10' MAXIMUM. FOR FILTER-CLOTH FENCE, WHEN ELONGATION IS >50%, POST SPACING SHALL NOT EXCEED 4' AND WHEN ELONGATION IS <50%, POST SPACING SHALL NOT EXCEED 6'.
4. WOVEN WIRE FENCE IS TO BE FASTENED SECURELY TO FENCE POSTS WITH WIRE TIES. FILTER CLOTH IS TO BE FASTENED SECURELY TO WOVEN WIRE FENCE WITH TIES SPACED EVERY 24" AT TOP AND MID SECTION.
5. WHEN TWO SECTIONS OF FILTER CLOTH ADJOIN EACH OTHER THEY SHALL BE OVER-LAPPED BY 6" AND FOLDED.
6. MAINTENANCE SHALL BE PERFORMED AS NEEDED AND MATERIAL REMOVED WHEN SEDIMENT REACHES HALF OF FABRIC HEIGHT.

ADAPTED FROM DETAILS PROVIDED BY: NEW YORK STATE DEC
ORIGINALLY DEVELOPED BY USDA-NRCS
VERMONT DEPARTMENT OF ENVIRONMENTAL CONSERVATION

SILT FENCE

NOTES:
REFER TO "THE VERMONT STANDARDS & SPECIFICATIONS FOR EROSION PREVENTION & SEDIMENT CONTROL -2006- "FROM THE VT AGENCY OF NATURAL RESOURCES FOR ADDITIONAL GUIDANCE.

THIS WORK SHALL BE PERFORMED IN ACCORDANCE WITH SECTION 649 AND AS SHOWN IN THE PLANS FOR GEOTEXTILE FOR SILT FENCE (PAY ITEM 649.51).

REVISIONS	
MARCH 21, 2008	WHF
DECEMBER 11, 2008	WHF
JANUARY 13, 2009	WHF

PROJECT NAME: SWANTON
PROJECT NUMBER: STP 2038(16)

FILE NAME: ...\Plot-Files\21.EPSC DETS.dgn
PROJECT LEADER: G. EDWARDS
DESIGNED BY: KJR
EPSC DETAILS 1
PLOT DATE: 8/26/2011
DRAWN BY: KJR
CHECKED BY: GAE
SHEET 24 OF 25

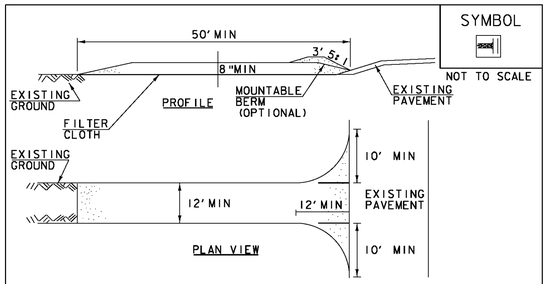

CONSTRUCTION SPECIFICATIONS

1. STONE SIZE- USE 1-4" STONE, RECLAIMED OR RECYCLED CONCRETE EQUIVALENT.
2. LENGTH- NOT LESS THAN 50' (EXCEPT ON A SINGLE RESIDENCE LOT WHERE A 30' MINIMUM LENGTH APPLIES).
3. THICKNESS- NOT LESS THAN 8".
4. WIDTH- 12' MINIMUM, BUT NOT LESS THAN THE FULL WIDTH AT POINTS WHERE INGRESS OR EGRESS OCCURS. 24' IF SINGLE ENTRANCE TO SITE.
5. GEOTEXTILE MUST BE PLACED OVER THE ENTIRE AREA PRIOR TO PLACING STONE.
6. SURFACE WATER- ALL SURFACE WATER FLOWING OR DIVERTED TOWARD CONSTRUCTION ENTRANCES SHALL BE PIPED BENEATH THE ENTRANCE. IF PIPING IS IMPRACTICAL, A MOUNTABLE BERM WITH 5:1 SLOPES WILL BE PERMITTED.
7. MAINTENANCE- THE ENTRANCE SHALL BE MAINTAINED IN A CONDITION WHICH WILL PREVENT TRACKING OR FLOWING OF SEDIMENT ONTO PUBLIC RIGHTS-OF-WAY, ALL SEDIMENT SPILLED, DROPPED, WASHED OR TRACKED ONTO PUBLIC RIGHTS-OF-WAY MUST BE REMOVED IMMEDIATELY.
8. WHEN WASHING IS REQUIRED, IT SHALL BE DONE ON AN AREA STABILIZED WITH STONE AND WHICH DRAINS INTO AN APPROVED SEDIMENT TRAPPING DEVICE.
9. PERIODIC INSPECTION AND NEEDED MAINTENANCE SHALL BE PROVIDED ACCORDING TO PERMIT REQUIREMENTS.

ADAPTED FROM DETAILS PROVIDED BY: NEW YORK STATE DEC
ORIGINALLY DEVELOPED BY USDA-NRCS
VERMONT DEPARTMENT OF ENVIRONMENTAL CONSERVATION

STABILIZED CONSTRUCTION ENTRANCE

NOTES:
REFER TO "THE VERMONT STANDARDS & SPECIFICATIONS FOR EROSION PREVENTION & SEDIMENT CONTROL -2006- " FROM THE VT AGENCY OF NATURAL RESOURCES FOR ADDITIONAL GUIDANCE.

THIS WORK SHALL BE PERFORMED IN ACCORDANCE WITH SECTION 653 FOR VEHICLE TRACKING PAD (PAY ITEM 653.35) OR AS SPECIFIED IN THE CONTRACT.

REVISIONS	
MARCH 24, 2008	WHF
JANUARY 13, 2009	WHF

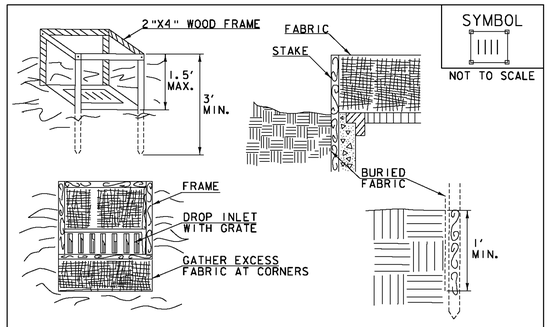

CONSTRUCTION SPECIFICATIONS

1. FILTER FABRIC SHALL HAVE AN APPARENT OPENING SIZE OF 40-85. BURLAP MAY BE USED FOR SHORT TERM APPLICATIONS.
2. CUT FABRIC FROM A CONTINUOUS ROLL TO ELIMINATE JOINTS. IF JOINTS ARE NEEDED THEY WILL BE OVERLAPPED TO THE NEXT STAKE.
3. STAKE MATERIALS WILL BE STANDARD 2"x 4" WOOD OR EQUIVALENT METAL WITH A MINIMUM LENGTH OF 3'.
4. SPACE STAKES EVENLY AROUND INLET 3' APART AND DRIVE A MINIMUM 18" DEEP. SPANS GREATER THAN 3' MAY BE BRIDGED WITH THE USE OF WIRE MESH BEHIND THE FILTER FABRIC FOR SUPPORT.
5. FABRIC SHALL BE EMBEDDED 1' MINIMUM BELOW GROUND AND BACKFILLED. IT SHALL BE SECURELY FASTENED TO THE STAKES AND FRAME.
6. A 2" x 4" WOOD FRAME SHALL BE COMPLETED AROUND THE CREST OF THE FABRIC FOR OVER FLOW STABILITY.
7. MAXIMUM DRAINAGE AREA 1 ACRE

ADAPTED FROM DETAILS PROVIDED BY: NEW YORK STATE DEC
ORIGINALLY DEVELOPED BY USDA-NRCS
VERMONT DEPARTMENT OF ENVIRONMENTAL CONSERVATION

FILTER FABRIC DROP INLET PROTECTION

NOTES:
REFER TO "THE VERMONT STANDARDS & SPECIFICATIONS FOR EROSION PREVENTION & SEDIMENT CONTROL -2006- " FROM THE VT AGENCY OF NATURAL RESOURCES FOR ADDITIONAL GUIDANCE.

THIS WORK SHALL BE PERFORMED IN ACCORDANCE WITH SECTION 653 FOR INLET PROTECTION DEVICE, TYPE I (PAY ITEM 653.40).

REVISIONS	
MARCH 7, 2008	WHF
JANUARY 13, 2009	WHF

PROJECT NAME: SWANTON
PROJECT NUMBER: STP 2038(16)

FILE NAME: ...\Plot-Files\21.EPSC DETS.dgn
PROJECT LEADER: G. EDWARDS
DESIGNED BY: KJR
EPSC DETAILS 2

PLOT DATE: 8/26/2011
DRAWN BY: KJR
CHECKED BY: GAE
SHEET 25 OF 25

FILE
ES1024X.0
REVISIONS

Emergency Notification Sign (ENS)

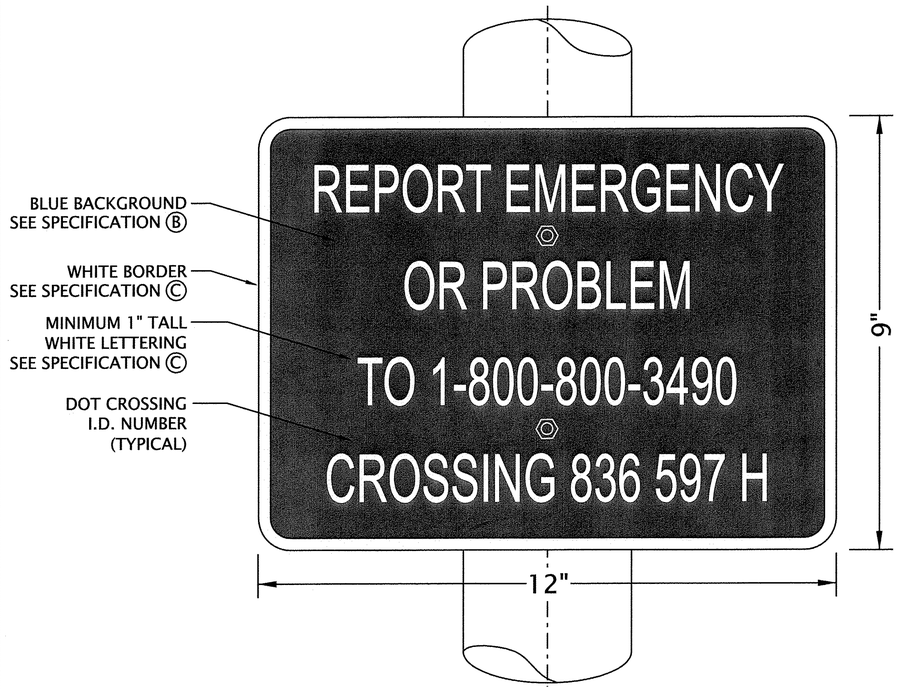

FRONT VIEW

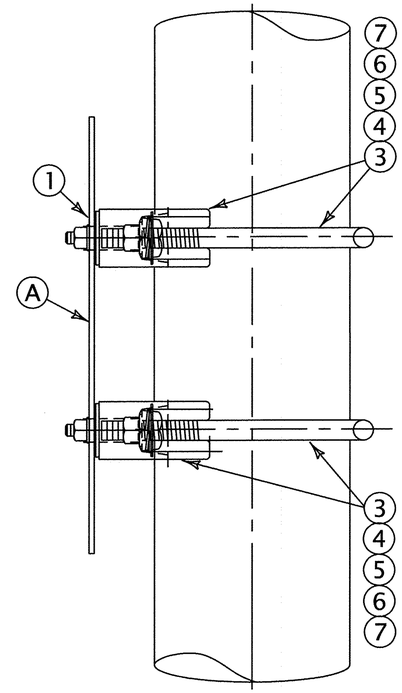

SIDE VIEW
(W/O EXTENSION BRACKET)
FOR FLASHING LIGHT SIGNAL MAST
ALSO FOR MAIN MAST OF CANTILEVER

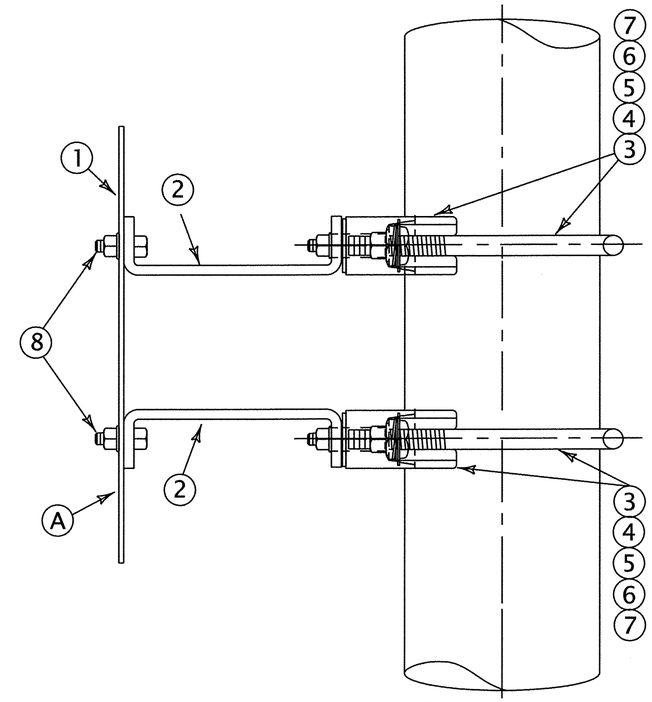

SIDE VIEW
(WITH EXTENSION BRACKET)
FOR AUTOMATIC CROSSING GATE MAST

MATERIALS		
REF. NO.	DESCRIPTION	ITEM NUMBER
—	SIGN, VANDAL RESISTANT 1/4"x3/4" EXTRUDED ALUMINUM	
1	SIGN, EMERGENCY NOTIFICATION (ENS)	
2	ARM EXTENSION (AS REQUIRED-SEE ES1024 SH.2)	
3	4" & 5" MAST MOUNTING ASSY. COMPLETE WITH U-BOLT, 5/16" STUD BOLT & HARDWARE	
4	6" MAST MOUNTING ASSY. COMPLETE WITH U-BOLT, 5/16" STUD BOLT & HARDWARE	
5	8" MAST MOUNTING ASSY. COMPLETE WITH U-BOLT, 5/16" STUD BOLT & HARDWARE	
6	10" MAST MOUNTING ASSY. COMPLETE WITH U-BOLT, 5/16" STUD BOLT & HARDWARE	
7	12" MAST MOUNTING ASSY. COMPLETE WITH U-BOLT, 5/16" STUD BOLT & HARDWARE	
8	BOLT ASSY, 5/16"-11 x 1" LG., HEX HD., SS CAP SCREW W/ SS HEX NUT, SS FLAT WASHERS & SS LOCK WASHERS	

SPECIFICATIONS:

Ⓐ Sign Blade: 0.080" Thick Specifications 6061-T6 or 5062-H38. Holes to be 7/16" dia., to be degreased and etched prior to the application of reflective sheeting. Refer to AREMA Signal Manual 3.2.75-2.

Ⓑ Facing: Blue, Engineering grade High-Intensity retro-reflective sheeting in compliance with the latest edition of Federal Specification #L-S-300C.

Ⓒ Letters: White silkscreen, Scotchcal or equal, U.S. Department of Transportation Series D Alphabet.

NOTES:

1 - Order mounting bracket assemblies separately see Ref. No. 3,4,5,6,7, and 8 above.
2 - See Sheet 2 for detailed installation and maintenance instructions.
3 - This sign is to be installed in addition to standard metal crossing US.DOT/AAR sign for all highway crossing signals.

RAIL AMERICA
ENGINEERING SERVICES
STANDARDS REFERENCE MANUAL

Issue Date: 03-15-2011 | Revised Date: 03-15-2011
Authorized: C. A. Stone
Director Engineering Services

The material and equipment shown herein must meet or exceed all quality requirements. Any deviation from these standards must be submitted in writing and approved by the Railroad Director of Engineering Services prior to use.

Right of Way Signs
SERIES 1000

VEHICLE BLOCKING CROSSING OR OTHER EMERGENCY SIGN

ES1024X.0
SH. 1 OF 2

FILE
ES1024X.0
REVISIONS

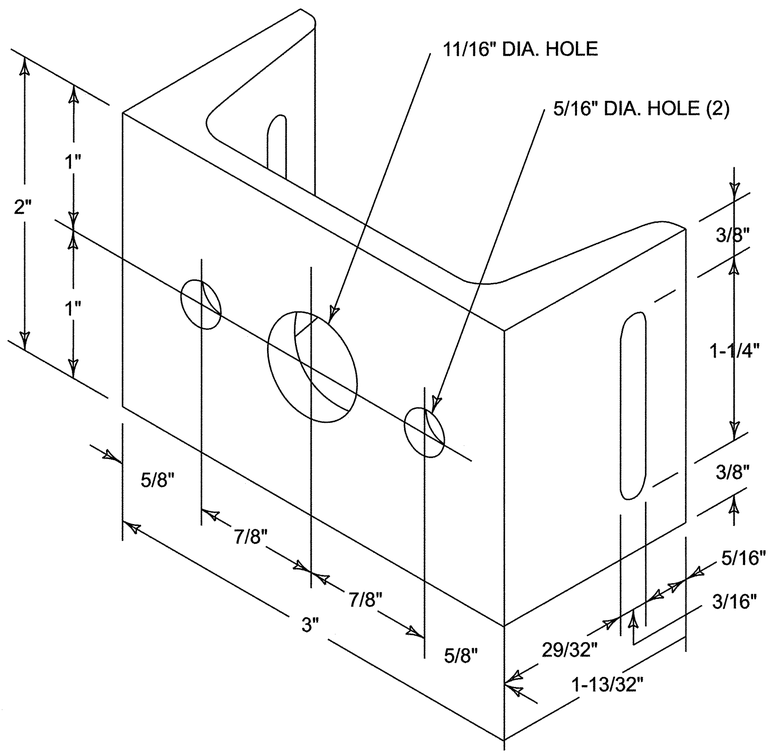

UNIVERSAL CHANNEL ADAPTER 22510 / 020.0052385.1

3"x1-13/32"x2" LG.
ALUMINUM 6061-T6

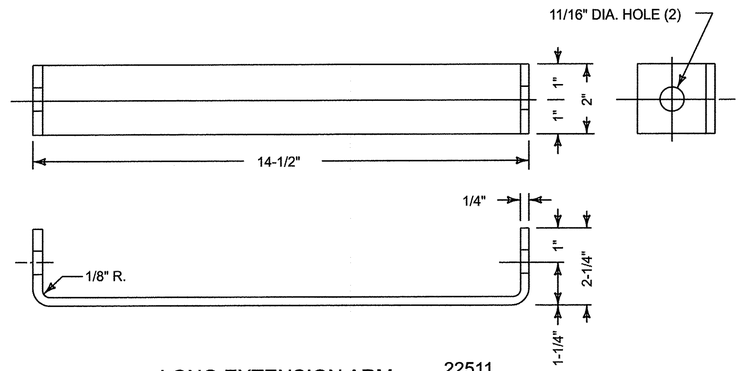

LONG EXTENSION ARM 22511 / 020.0052480.1

ALUMINUM 6061-T6

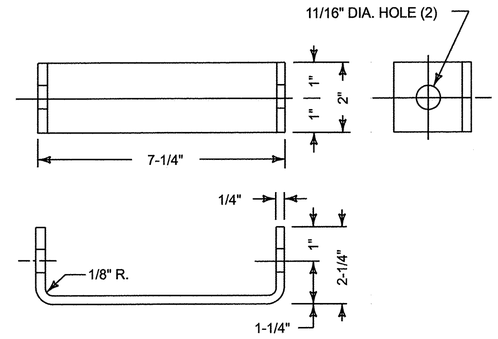

SHORT EXTENSION ARM 22512 / 020.0052470.1

ALUMINUM 6061-T6

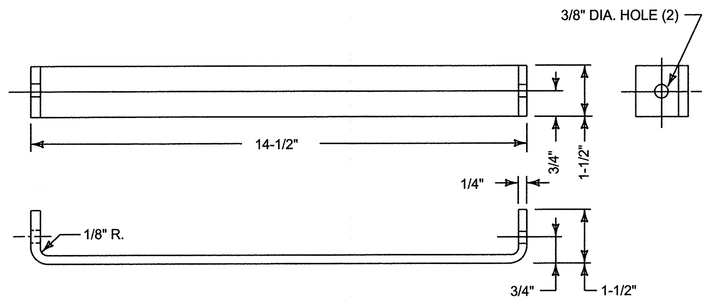

LONG EXTENSION ARM 22513 / 020.0052476.1

ALUMINUM 6061-T6

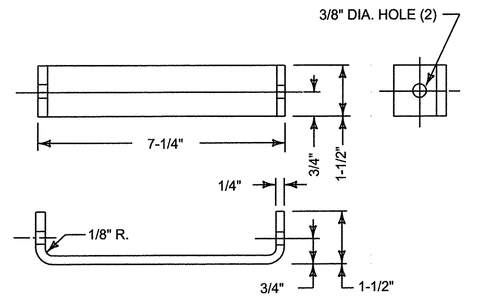

SHORT EXTENSION ARM 22514 / 020.0052475.1

ALUMINUM 6061-T6

FASTENINGS FOR SIGNS	
BAND-IT CO. NO.	DESCRIPTION
C206	BAND, 3/4" STAINLESS STEEL (ORDER BY FT., 100 FT. ROLL MIN.)
C256	BUCKLE, 3/4" STAINLESS STEEL (100/BOX, MIN.)
C726 *	BUCKLE, 3/4" STAINLESS STEEL - SCRU-LOCK
C001	TOOL, BAND-IT APPLICATION (WITH SPINNING GRIPS)

*USE ONLY WHEN SPACE LIMITS THE APPLICATION OF TOOL APPLIED BUCKELS (NO.C256)

FILE
SC431.1
REVISIONS

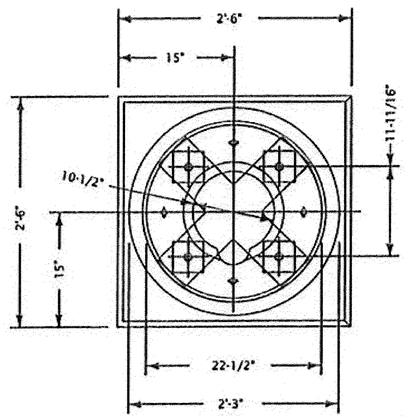

PLAN VIEW

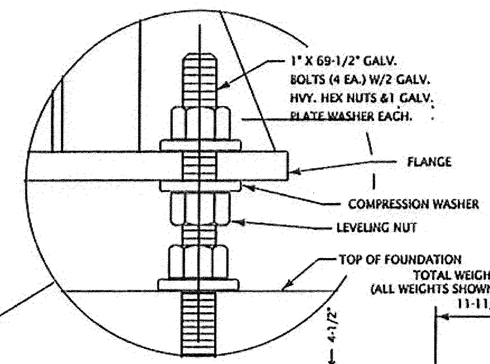

TOTAL WEIGHT 1,900 LBS.
(ALL WEIGHTS SHOWN ARE APPROXIMATE)

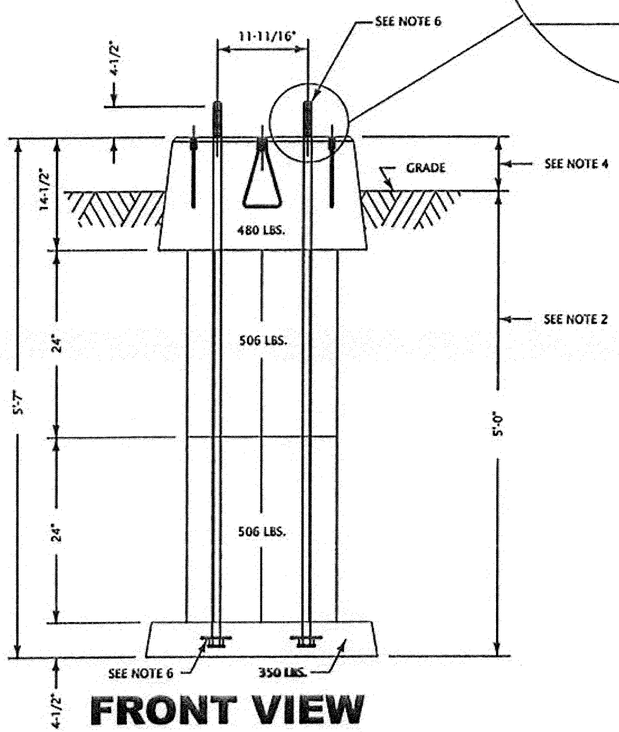

FRONT VIEW

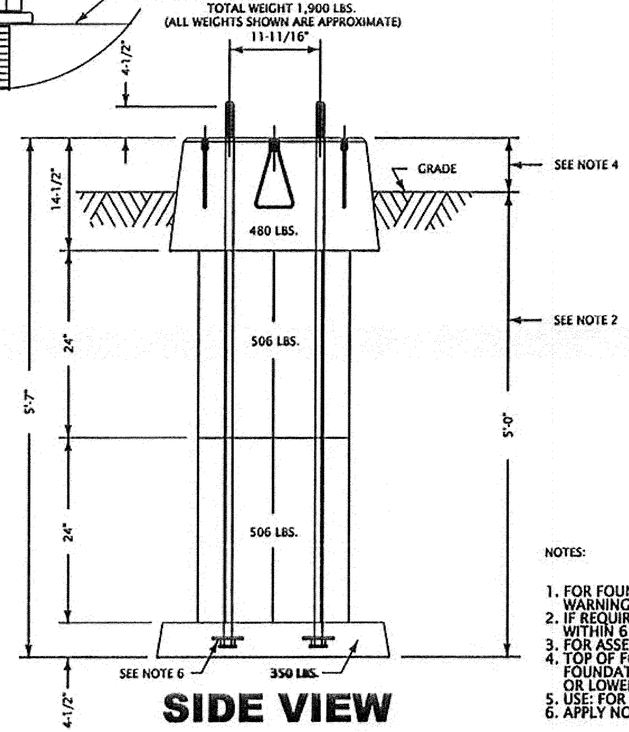

SIDE VIEW

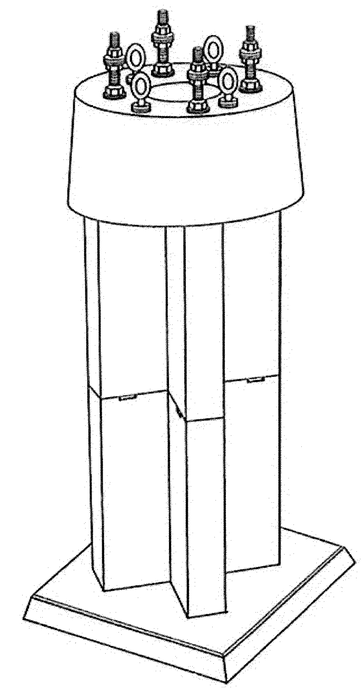

CATALOG NUMBER	HEIGHT	WEIGHT	BOLT LENGTH	USE
DPS-2A	5'-7"	1900	69.5"	GCWD or crossing signal
DPS-2SA	6'-7"	2150	81.5"	wayside signal

NOTES:

1. FOR FOUNDATION HEIGHT AND GRADE ELEVATIONS, SEE 610.1. FOR GRADE CROSSING WARNING SYSTEMS, 400.1 FOR TRAIN CONTROL SIGNALS.
2. IF REQUIRED DEPTH OF BASE PLATE IS MORE THAN 5 FEET BELOW NATURAL GRADE, THE AREA WITHIN 6 FEET OF EXCAVATION MUST HAVE OVERBURDEN REMOVED TO A ONE FOOT DEPTH BELOW GRADE.
3. FOR ASSEMBLY PROCEDURES, REFER TO INSTRUCTIONS PROVIDED BY MANUFACTURER.
4. TOP OF FOUNDATION FOR CROSSING SIGNAL SHALL BE 4" ABOVE GRADE, TOP OF FOUNDATION FOR WAYSIDE SIGNALS SHALL NOT BE HIGHER THAN TOP OF RAIL OR LOWER THAN BASE OF RAIL.
5. USE: FOR WAYSIDE GROUND SIGNALS AND CROSSING SIGNALS.
6. APPLY NO-OX-ID GREASE TO BOLT THREADS ON BOTH ENDS.

MAIN INDEX
SUB INDEX

RAIL AMERICA
ENGINEERING SERVICES
STANDARDS REFERENCE MANUAL

Issue Date: 03-01-2009 | Revised Date: 03-01-2009
Authorized: Chief Engineer Signals and Communications

The material and equipment shown herein must meet or exceed all quality requirements. Any deviation from these standards must be submitted in writing and approved by the Railroad Director of Engineering Services prior to use.

HOUSINGS, SIGNALS AND FOUNDATIONS
400 SERIES

FOUNDATIONS - DPS-2A
(CROSSING OR WAYSIDE SIGNALS)

SC431.1
SH. 1 OF 1

FILE	
SC600.1	
REVISIONS	
09/27/10	XRL/TJF

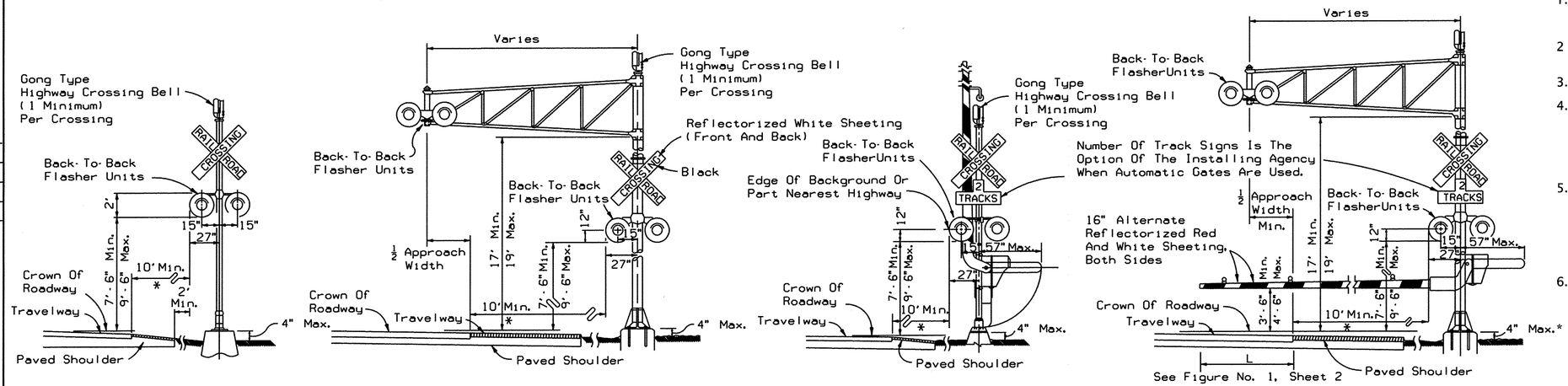

TYPE I (NO CURB)

TYPE II (NO CURB)

TYPE III (NO CURB)

TYPE IV (NO CURB)

NOTES:

1. NO GUARDRAIL IS PROPOSED FOR SIGNALS: HOWEVER, SOME FORM OF IMPACT ATTENUATION DEVICE MAY BE SPECIFIED FOR CERTAIN LOCATIONS.
2. ADVANCE FLASHER TO BE INSTALLED WHEN AND IF CALLED FOR IN PLANS OR SPECIFICATIONS.
3. TOP OF FOUNDATION SHALL BE NO HIGHER THAN 4" ABOVE FINISHED SHOULDER GRADE.
4. TYPE OF TRAFFIC CONTROL DEVICE
   I. FLASHING SIGNALS
   II. FLASHING SIGNALS WITH CANTILEVER
   III. FLASHING SIGNALS WITH GATE
   IV. FLASHING SIGNALS WITH CANTILEVER AND GATE
   V. GATE
5. CLASS OF TRAFFIC CONTROL DEVICES
   I. FLASHING SIGNALS - ONE TRACK
   II. FLASHING SIGNALS - MULTIPLE TRACKS
   III. FLASHING SIGNALS AND GATES - ONE TRACK
   IV. FLASHING SIGNALS AND GATES - MULTIPLE TRACKS
6. TWO SEPARATE FOUNDATIONS MAY BE REQUIRED (ONE FOR SIGNALS, ONE FOR GATE) DEPENDING ON TYPE OF EQUIPMENT NEEDED.
   WHEN 10' IS DEEMED IMPRACTICAL, THE CONTROL DEVICE CAN BE LOCATED AS CLOSE AS 2' FROM THE EDGE OF A PAVED SHOULDER BUT NOT LESS THAN 6' FROM THE EDGE OF THE NEAR TRAFFIC LANE.

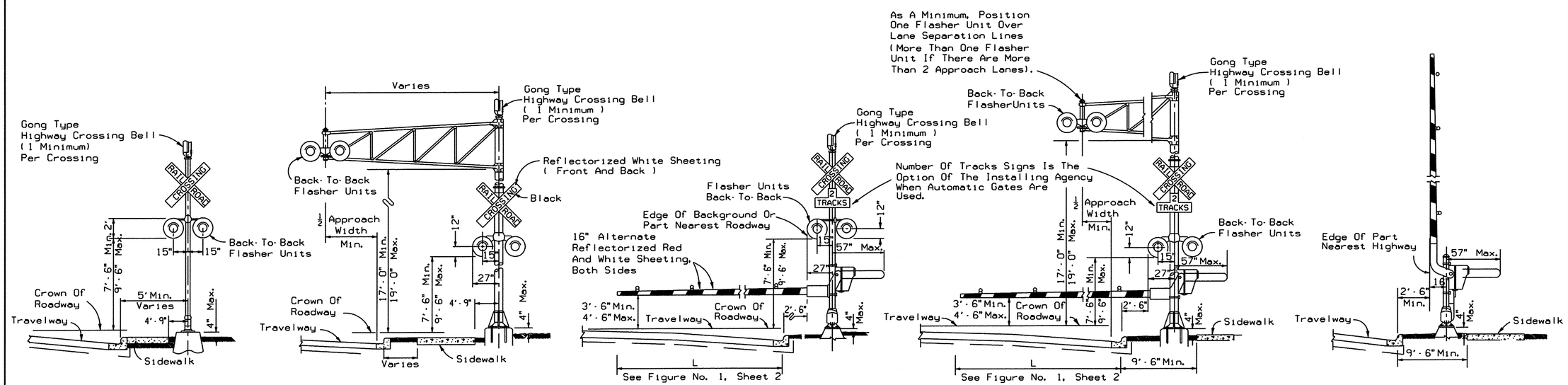

TYPE I (WITH CURB)

TYPE II (WITH CURB)

TYPE III (WITH CURB)

TYPE IV (WITH CURB)

TYPE V (WITH CURB)

RAIL AMERICA
SIGNAL AND COMMUNICATIONS STANDARDS REFERENCE MANUAL

Issue Date: 03-01-2009 | Revised Date: 09-27-2010

Authorized: Clint Martin
Chief Engineer Signals and Communications

The material and equipment shown herein must meet or exceed all quality requirements. Any deviation from these standards must be submitted in writing and approved by the Railroad Director of Engineering Services prior to use.

CROSSING WARNING DEVICES

600 SERIES

TYPICAL LOCATION PLAN FOR HIGHWAY CROSSING SIGNALS

SC600.1

SH. 1 OF 4

FILE	
SC600.1	
REVISIONS	
09/27/10	XRL/TJF

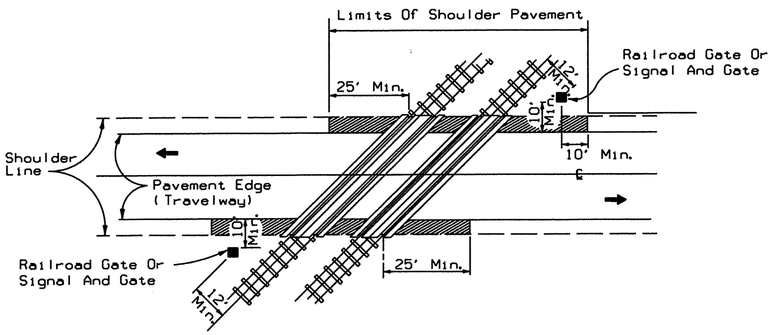

ACUTE ANGLE (OR RIGHT ANGLE)

TRACK CLEARANCE AT RAILROAD CROSSING

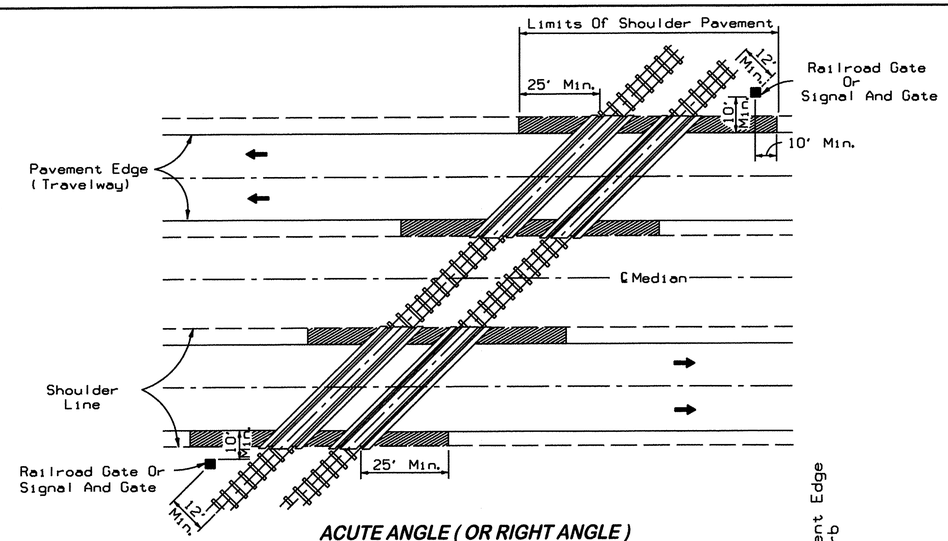

ACUTE ANGLE (OR RIGHT ANGLE)

TRACK CLEARANCE AT RAILROAD CROSSING

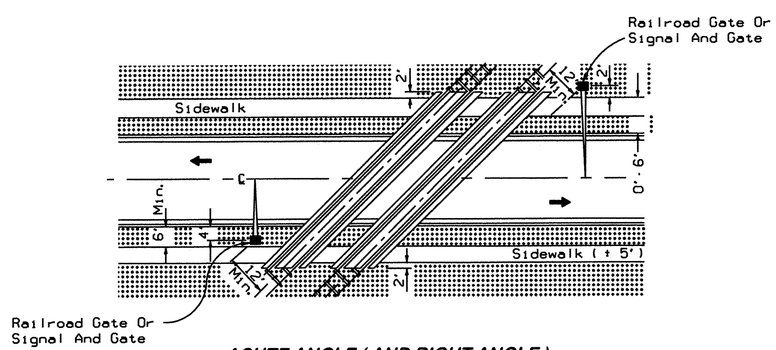

ACUTE ANGLE (AND RIGHT ANGLE)

SIGNAL PLACEMENT AT RAILROAD CROSSING (2 LANES, CURB & GUTTER)

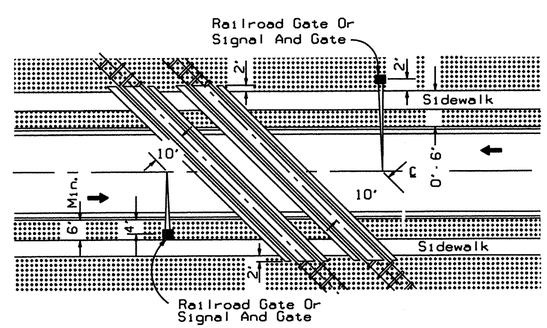

OBTUSE ANGLE

SIGNAL PLACEMENT AT RAILROAD CROSSING (2 LANES, CURB & GUTTER)

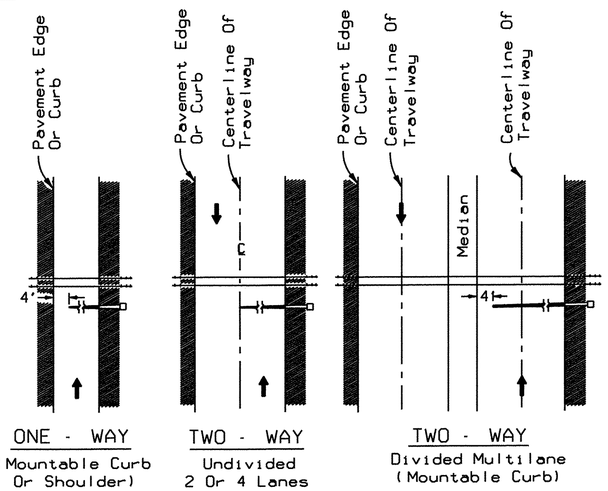

Note :
Arrows denote direction of travel not lane indication

FIGURE 1
Gate Length Requirements
See Note 6 Sheet 3

NOTES:

1. THE LOCATION OF FLASHING SIGNALS AND STOP LINES SHALL BE ESTABLISHED BASED ON FUTURE (OR PRESENT) INSTALLATION OF GATE WITH APPROPRIATE TRACK CLEARANCES.
2. WHERE PLANS CALL FOR RAILROAD TRAFFIC CONTROL DEVICES TO BE INSTALLED IN CURBED MEDIANS, THE MINIMUM MEDIAN WIDTH SHALL BE 12'-6".
3. LOCATION OF RAILROAD TRAFFIC CONTROL DEVICE IS BASED ON THE DISTANCE AVAILABLE BETWEEN FACE OF CURB AND SIDEWALK.
   0' -TO-6' - LOCATE DEVICE OUTSIDE SIDEWALK.
   OVER 6' - LOCATE DEVICE BETWEEN FACE OF CURB AND SIDEWALK.
4. STOP LINE TO BE PERPENDICULAR TO EDGE OF ROADWAY. APPROX. 15' FROM NEAREST RAIL; OR 8' FROM AND PARALLEL TO GATE WHEN PRESENT

RAIL AMERICA SIGNAL AND COMMUNICATIONS STANDARDS REFERENCE MANUAL	Issue Date: 03-01-2009	Revised Date: 09-27-2010	The material and equipment shown herein must meet or exceed all quality requirements. Any deviation from these standards must be submitted in writing and approved by the Railroad Director of Engineering Services prior to use.	**CROSSING WARNING DEVICES**	TYPICAL LOCATION PLAN FOR HIGHWAY CROSSING SIGNALS	**SC600.1**
	Authorized: Chief Engineer Signals and Communications			600 SERIES		SH. 2 OF 4

FILE	
SC600.1	
REVISIONS	
09/27/10	XRL/TJF

RAILROAD CROSSING AT TWO (2) - LANE ROADWAY

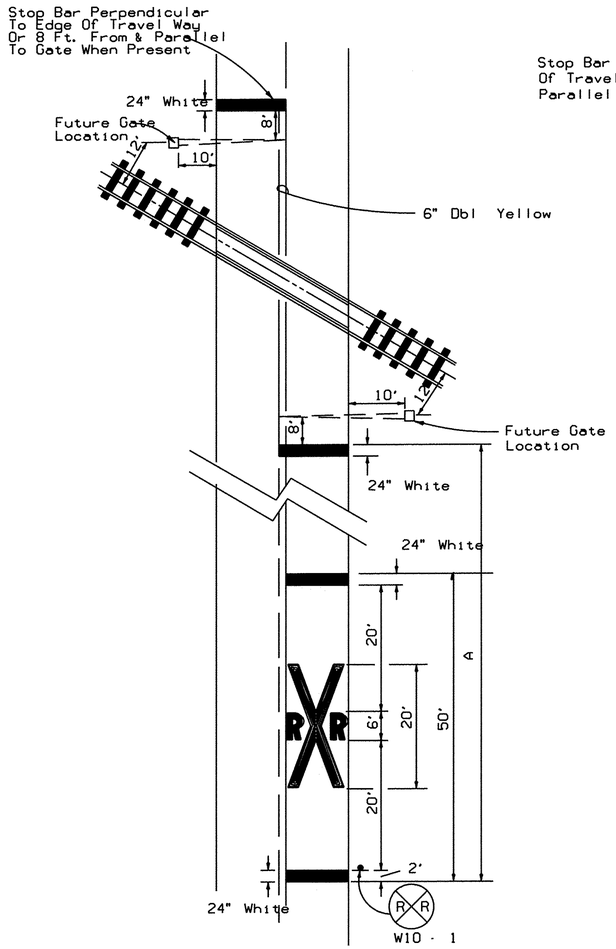

RAILROAD CROSSING AT MUTI-LANE ROADWAY

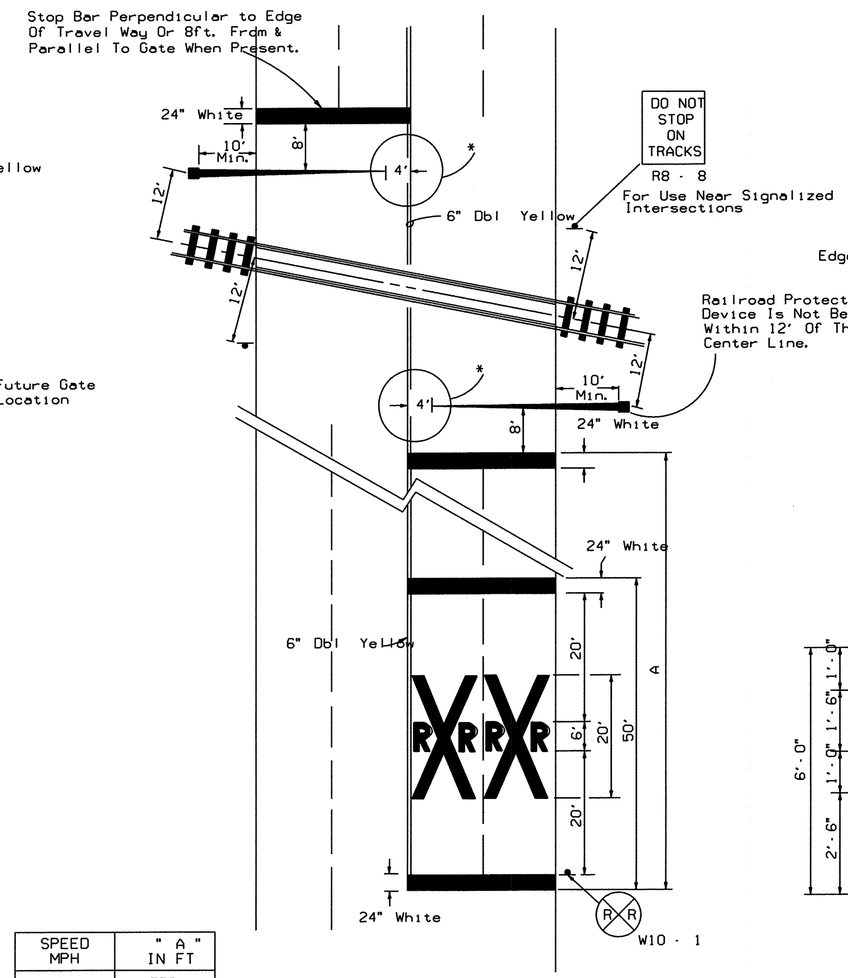

RELATIVE LOCATION OF CROSSING TRAFFIC CONTROL DEVICES

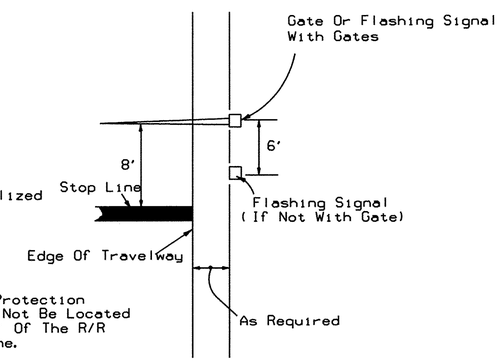

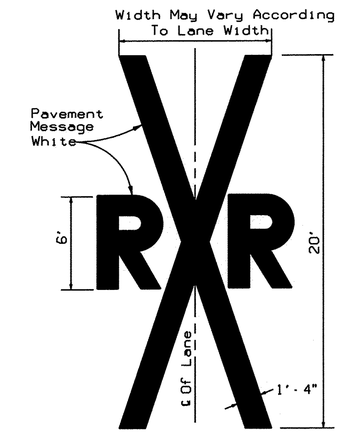

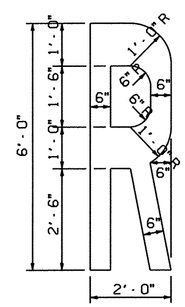

SPEED MPH	" A " IN FT
60	550
55	450
50	375
45	300
40	225
35	150
30	100
URBAN	50 MIN.

NOTES:

1. When computing pavement message, quantities do not include transverse lines.
2. Placement of sign W10-1 in a residential or business district, where low speeds are prevalent, the W10-1 sign may be placed a minimum distance of 100 feet from the crossing. Where street intersection occur between the R R pavement message and the tracks an additional W10-1 sign and additional pavement message should be used
3. Recommended location for sign FTP-38, 100 ft. Urban & 300 ft. Rural in advance of the crossing.
4. A portion of the pavement markings symbol should be directly opposite the W10-1 sign.
5. Recommended location for FTP-38 A or B signs, 100' urban and 300' rural. See index 17355 for sign details.
6. Gate Length Requirements

* For two-way undivided sections:
The gate should extend to within 1' of the center line. On multilane approaches the maximum gate length may not reach to within 1' of the center line. For those cases, the distance from the gate to the center line shall be a maximum of 4'.

For one-way or divided sections:
The gate shall be of sufficient length such that the distance from the gate tip to the inside edge of pavement is a maximum of 4'.

SINDEX17882 4.TIF

FILE	
SC600.1	
REVISIONS	
09/27/10	XRL/TJF

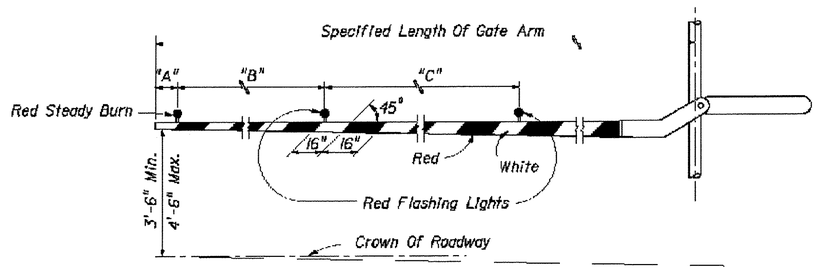

RAILROAD GATE ARM LIGHT SPACING

Specified Length Of Gate Arm	Dimension "A"	Dimension "B"	Dimension "C"
14 Ft.	6"	36"	5'
15 Ft.	18"	36"	5'
16-17 Ft.	24"	36"	5'
18-19 Ft.	28"	41"	5'
20-23 Ft.	28"	4'	5'
24-28 Ft.	28"	5'	5'
29-31 Ft.	36"	6'	6'
32-34 Ft.	36"	7'	7'
35-37 Ft.	36"	9'	9'
38 And Over	36"	10'	10'

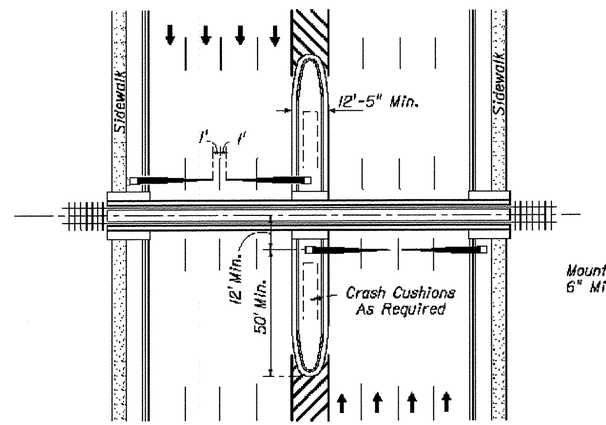

PLAN

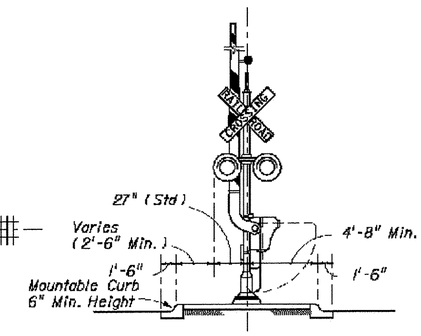

MEDIAN SECTION AT SIGNAL GATES

NOTE:
For additional information see the "Manual On Uniform Traffic Control Devices", Part VIII; The "Traffic Control Handbook", Part VIII; and AASHTO "A Policy On Geometric Design Of Streets And Highways".

MEDIAN SIGNAL GATES FOR MULTI LANE UNDIVIDED URBAN SECTIONS

(THREE OR MORE DRIVING LANES IN ONE DIRECTION, 45 mph OR LESS)

SC670.1.TIF	
FILE	
SC610.1	
REVISIONS	
09/27/10	XRL/TJF

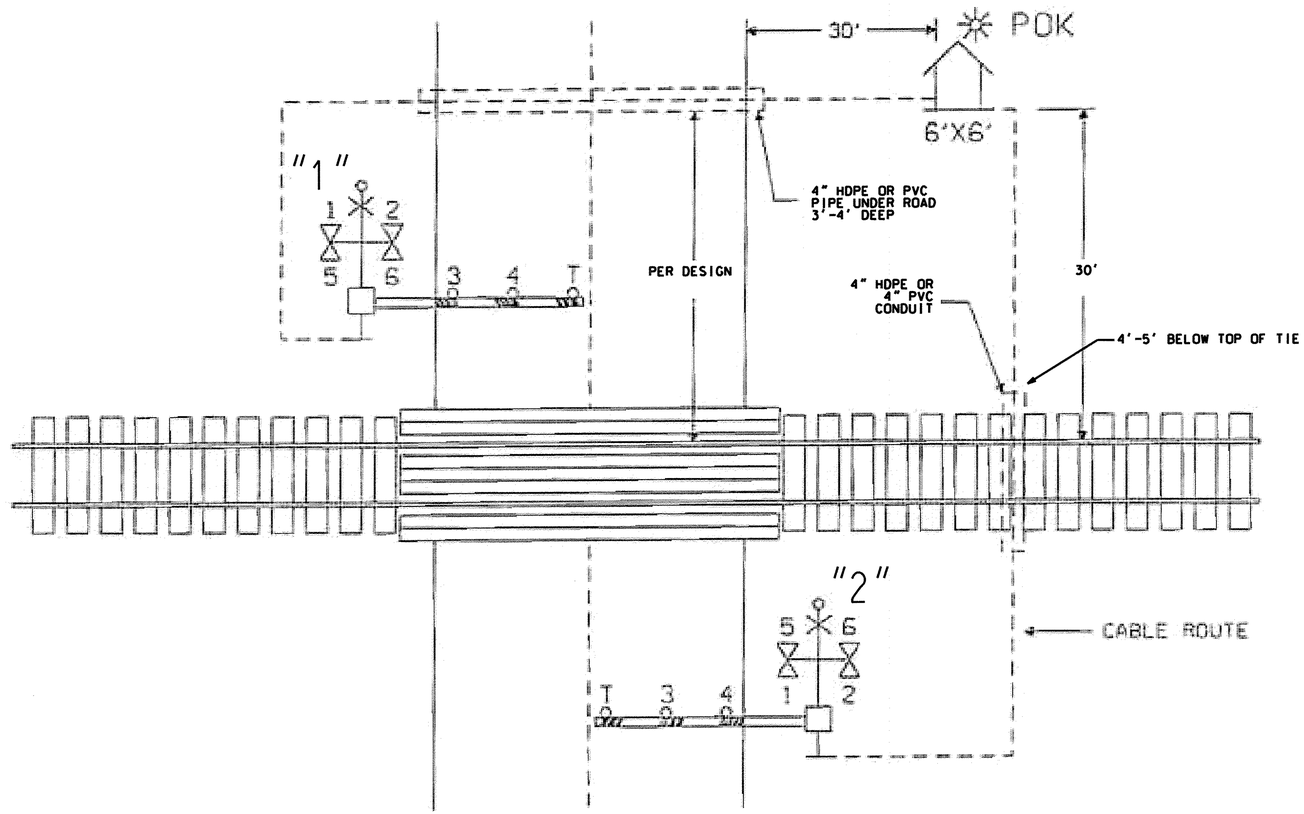

NOTES:

CABLE TO BE A MINIMUM OF 36" DEEP.

RAIL AMERICA SIGNAL AND COMMUNICATIONS STANDARDS REFERENCE MANUAL	Issue Date: 03-01-2009	Revised Date: 09-27-2010	The material and equipment shown herein must meet or exceed all quality requirements. Any deviation from these standards must be submitted in writing and approved by the Railroad Director of Engineering Services prior to use.	**CROSSING WARNING DEVICES**	UNDERGROUND CABLE ROUTES	**SC610.1**
	Authorized: Chief Engineer Signals and Communications			600 SERIES		SH. 1 OF 2

FILE	
SC610.1	
REVISIONS	
09/27/10	XRL/TJF

LOCATION OF AUTOMATIC WARNING DEVICE WHERE CANTILEVERS AND GATES ARE REQUIRED

NOTE:

EITHER CANTILEVER OR GATE MAY BE CLOSEST TO TRACK AS LOCAL CONDITIONS REQUIRE AND IF AUTHORIZED BY THE CHIEF ENGINEER.

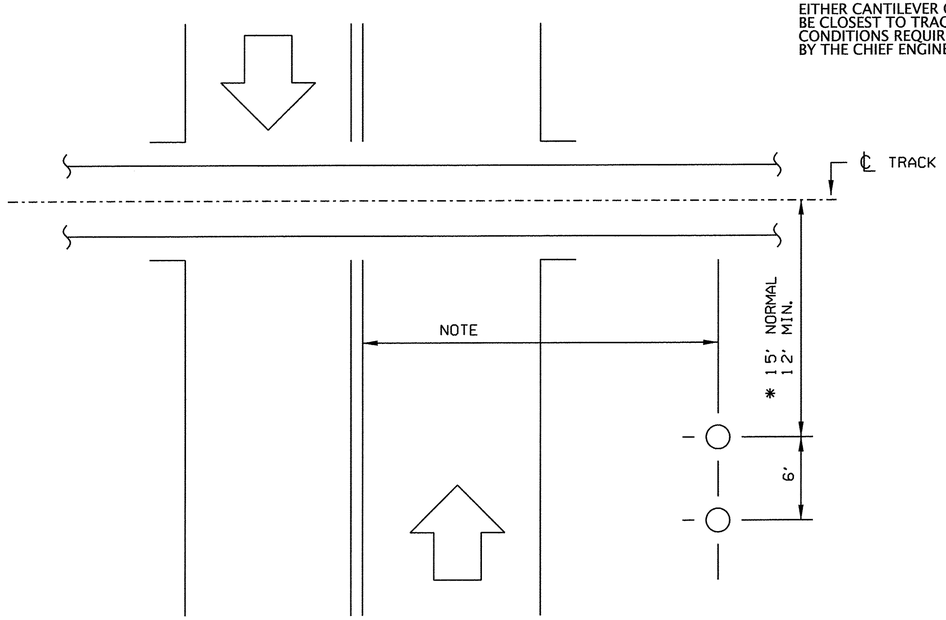

* PLACEMENT SHALL NOT BE LESS THAN 15' UNLESS AUTHORIZED BY THE CHIEF ENGINEER.

LOCATION OF HOUSE FROM STREET AND TRACK

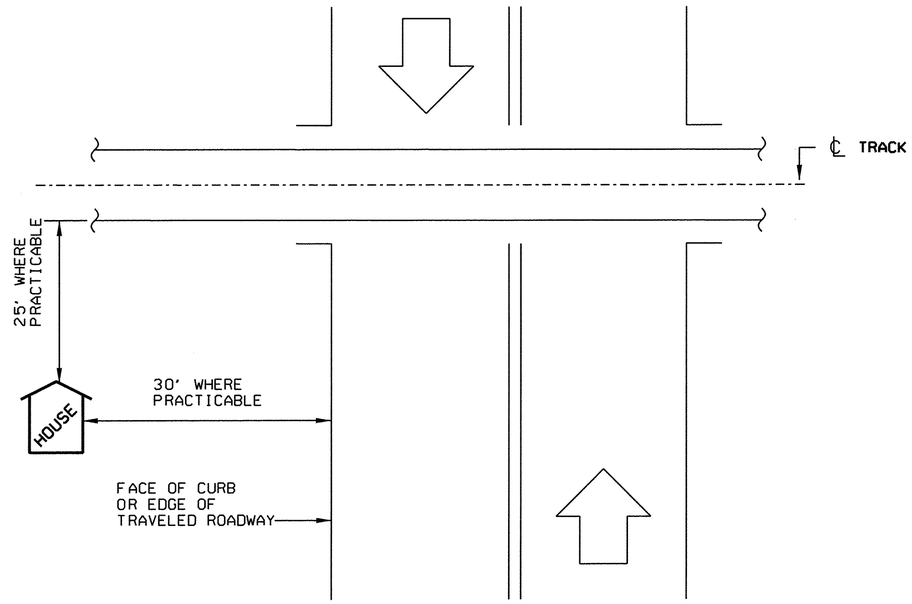

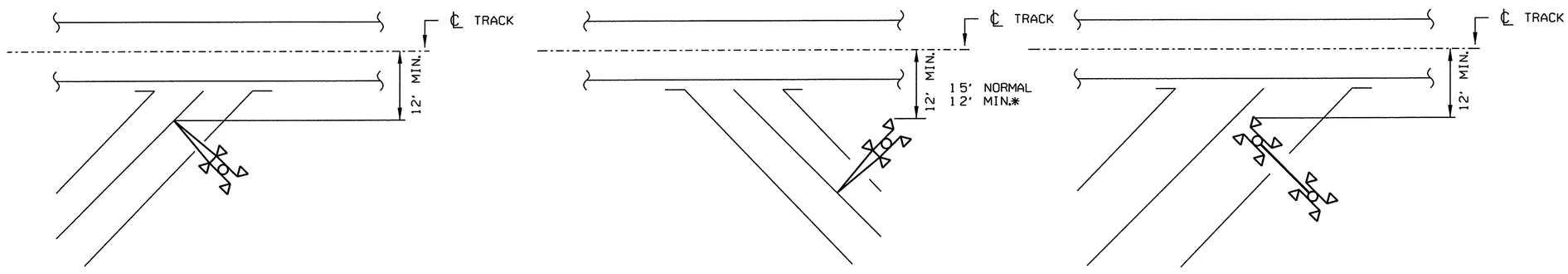

MINIMUM CLEARANCE OF AUTOMATIC WARNING DEVICES ANGLED CROSSINGS

RAIL AMERICA SIGNAL AND COMMUNICATIONS STANDARDS REFERENCE MANUAL	Issue Date: 03-01-2009 / Revised Date: 09-27-2010 / Authorized: Chief Engineer Signals and Communications	The material and equipment shown herein must meet or exceed all quality requirements. Any deviation from these standards must be submitted in writing and approved by the Railroad Director of Engineering Services prior to use.	**CROSSING WARNING DEVICES** 600 SERIES	LOCATION OF AUTOMATIC WARNING DEVICES	**SC610.1** SH. 2 OF 2

INTRUMENT CASE
STANDARD DOUBLE HIGH

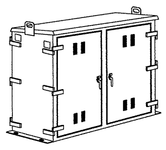

GENERAL SPECIFICATIONS

1) INSTRUMENT CASE SHELL TO BE CONSTRUCTED OF MINIMUM 0.100" ALUMINUM.

2) INSTRUMENT CASE TO INCLUDE (2) TERMINAL BOARDS WITH INTERCHANGEABLE RELAY RACK AND TERMINAL BOARD SECTION. STANDARD SHIPPING CONFIGURATION IS WITH THE RELAY RACK INSTALLED ON THE LEFT SIDE (REFER TO SHEET 3).

3) INSTRUMENT CASE TO INCLUDE (2) GROUND CONNECTIONS UNDERNEATH ON CENTER BASE STRUCTURAL MEMBER WITH GROUND WIRE ORIENTATION OUTWARDS. GROUND WIRE COILED AND PROTECTED TO PREVENT DAMAGE DURING SHIPPING.

4) INSTRUMENT CASE TO INCLUDE (6) 4-5/8" DIA. KNOCKOUTS IN FLOOR BEHIND TERMINAL BOARD WITH COVER PLATES FOR CABLES RISERS AND INCLUDE (4) 4" DIA. PVC PIPE 36" LONG WITH PLUMBERS CONNECTOR WITH 2" THREADS AND LOCK RINGS.

5) INTERNAL SURFACES TO BE PAINTED WITH TWO COATS OF WHITE LATEX ENAMEL. RUSTOLEUM PART #3092 OR EQUAL.

6) EXTERIOR - NATURAL ALUMINUM - NO FINISH.

7) INSTRUMENT CASE TO BE INSULATED WITH 1 INCH THERMAX.

RAILAMERICA, INC.

APPROVED: WALTER FITHIAN DIRECTOR OF SIGNALS AND COMMUNICATIONS DATE: 02-16-04	INSTRUMENT CASE STANDARD DOUBLE HIGH SPECIFICATIONS	DRAWING NUMBER RA-MS-021 SHEET 1 OF 3

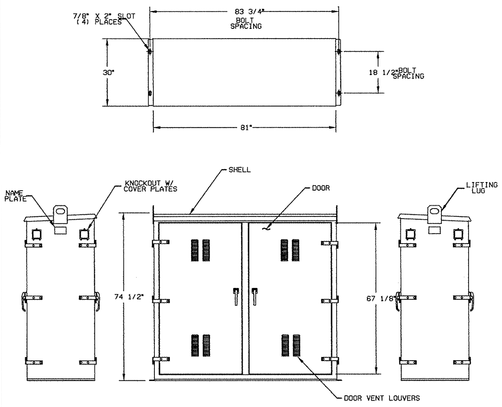

RAILAMERICA, INC.

APPROVED: WALTER FITHIAN DIRECTOR OF SIGNALS AND COMMUNICATIONS DATE: 02-16-04	INSTRUMENT CASE STANDARD DOUBLE HIGH OUTSIDE VIEWS	DRAWING NUMBER RA-MS-021 SHEET 2 OF 3

RAILAMERICA, INC.

APPROVED: WALTER FITHIAN DIRECTOR OF SIGNALS AND COMMUNICATIONS DATE: 02.19.04	DRAWING NUMBER RA-MS-021 SHEET 3 OF 3
INSTRUMENT CASE STANDARD DOUBLE HIGH INSIDE VIEWS	

TYPICAL FLASHING LIGHT SIGNAL

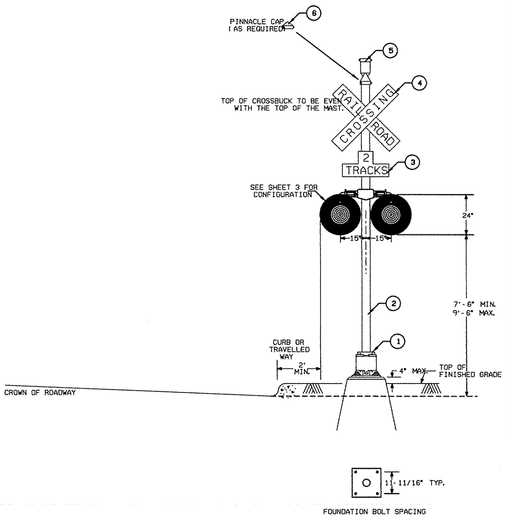

RAILAMERICA, INC.

APPROVED: WALTER FITHIAN DIRECTOR OF SIGNALS AND COMMUNICATIONS DATE: 02-16-04	FLASHING LIGHT SIGNAL	DRAWING NUMBER RA-MS-030 SHEET 1 OF 3

TYPICAL FLASHING LIGHT SIGNAL
GENERAL SPECIFICATIONS

NOTES:

1) THE SITUATION OF THE SIGNAL ASSEMBLY ON SITE SHALL MEET THE CLEARANCE AND LOCATION REQUIREMENTS SPECIFIED BY THE RR AND/OR GOVERNING AUTHORITIES. DIMENSIONS RELECTED ON THIS DRAWING ARE RECOMMENDATIONS ONLY.

2) RAILROAD SIGN WILL BE TYPICALLY SILVER-WHITE HIGH INTENSITY RETROREFLECTIVE MATERIALS (BLACK LETTERS ON WHITE BACKGROUND) WITH A 4" WIDE SILVER-WHITE STRIP RUNNING THE FULL LENGTH ON THE BACK SIDE OF THE X BUCKS. SEE OPTIONAL SIGNS FOR USE AS LOCAL REQUIREMENTS DEMAND.

3) ALL NEW SIGNALS TO HAVE LED LAMP ASSEMBLIES.

4) SIGNAL LIGHT HOODS AND BACKGROUNDS TO BE ALUMINUM WITH POWDER COATED FLAT BLACK FINISH.

5) THE BASIC SIGNAL STRUCTURE WILL BE MADE OF ALUMINUM. THIS INCLUDES THE MAST, JCT. BOX BASE, BELL.

6) ALL COMPONENTS WILL MEET AND/OR EXCEED INDUSTRY STANDARDS AS ESTABLISHED BY A.R.E.M.A.

7) FOUNDATION IS NOT INCLUDED WITH THIS ASSEMBLY AND MUST BE FURNISHED SEPARATELY.

8) MOUNTING HOLES FOR SIDE MAST LIGHTS ON HIGH SIGNAL MASTS TO BE DRILLED BY INSTALLATION CREW.

MATERIAL ORDERING INFORMATION

ITEM	DESCRIPTION	QTY.	MANUFACTURER	MANUFACTURER P/N
1	BASE JUNCTION BOX, 4", SINGLE SIDED, 11-11/16" x 11-11/16"	1	GETSOS	20923-01
2	MAST, 5" x 14'-0"	AS REQ'D	GETSOS	51105-01
	MAST, 5" x 16'-0"	AS REQ'D	GETSOS	51113-02
3	TRACK SIGN COMPLETE WITH MOUNTING HARDWARE (2 TRACK)	AS REQ'D	GETSOS	60032-05-2
	TRACK SIGN COMPLETE WITH MOUNTING HARDWARE (3 TRACK)	AS REQ'D	GETSOS	60032-05-3
4	RR CROSSING SIGN ASSEMBLY WITH 5" MOUNTING HARDWARE	AS REQ'D	GETSOS	60007-05
	RR CROSSING SIGN ASSEMBLY WITH 5" MOUNTING HARDWARE, DOUBLE FACED	AS REQ'D	GETSOS	60014-05
	RR CROSSING SIGN ASSEMBLY WITH 5" MOUNTING HARDWARE, W/ 4" STRIP	AS REQ'D	GETSOS	60214-05
5	BELL, ELECTRONIC	AS REQ'D	GENERAL SIGNAL	EB-3-360-5
6	CAP, PINNACLE, 5" DIA.	AS REQ'D	GETSOS	54-11305

RAILAMERICA, INC.

APPROVED: WALTER FITHIAN DIRECTOR OF SIGNALS AND COMMUNICATIONS DATE: 02-16-04	FLASHING LIGHT SIGNAL	DRAWING NUMBER RA-MS-030 SHEET 2 OF 3

TYPICAL FLASHING LIGHT SIGNAL

NOTES:

1) FLASHING LIGHT CROSSARM ASSEMBLY CONFIGURATION FOR 5" STANDARD MAST APPLICATIONS COMPLETE WITH MOUNTING HARDWARE, 12" LED SIGNAL HEADS, BACKGROUNDS AND HOODS.

STANDARD HIGHWAY CROSSING FLASHING LIGHT SIGNAL ASSEMBLIES

ITEM	PLAN DESIGNATION	TRAFFIC DIRECTION	DESCRIPTION		GETS P/N
1			2-WAY 12" LED		51701-02-206
2			4-WAY 12" LED	MAIN	51701-02-206
				SIDE	51701-02-204
3			3-WAY 12" LED	MAIN	51701-02-206
				SIDE	51701-02-202
4			3-WAY 12" LED	MAIN	51701-02-206
				SIDE	51701-02-201
5			1-WAY 12" LED		51701-02-205
6			3-WAY 12" LED	MAIN	51701-02-205
				SIDE	51701-02-204
7			2-WAY 12" LED	MAIN	51701-02-205
				SIDE	51701-02-202
8			2-WAY 12" LED	MAIN	51701-02-205
				SIDE	51701-02-201

RAILAMERICA, INC.

APPROVED: WALTER FITHIAN DIRECTOR OF SIGNALS AND COMMUNICATIONS DATE: 02-16-04	FLASHING LIGHT SIGNAL CROSSARM CONFIGURATION	DRAWING NUMBER RA-MS-030 SHEET 3 OF 3

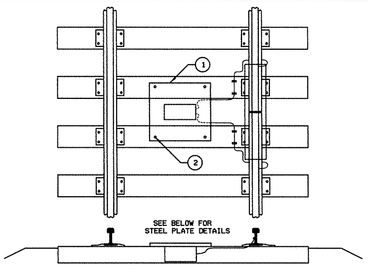

TYPICAL WIDE BAND JOINT COUPLER INSTALLATION DETAIL

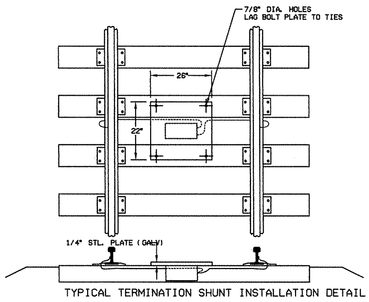

TYPICAL TERMINATION SHUNT INSTALLATION DETAIL

MATERIAL ORDERING INFORMATION

ITEM	DESCRIPTION	QTY.	MANUFACTURER	MANUFACTURER P/N
1	PLATE, SHUNT, GALV.	1	GETSOS	6193-01
2	LAG BOLT, 1/2" x 4", GALV.	4	COMMERCIAL	VARIOUS

RAILAMERICA, INC.

APPROVED: WALTER FITHIAN DIRECTOR OF SIGNALS AND COMMUNICATIONS DATE: 02-16-04	TYPICAL SHUNT AND COUPLER INSTALLATIONS ON WOODEN TIES	DRAWING NUMBER RA-IS-001 SHEET 1 OF 1

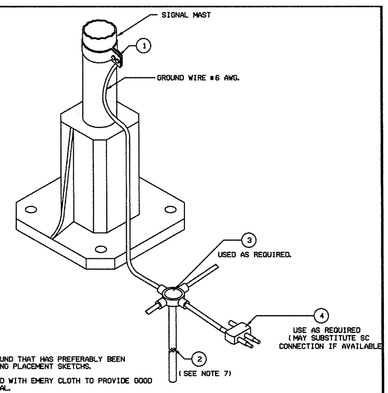

NOTES:

1) PLACE GROUND RODS IN GROUND THAT HAS PREFERABLY BEEN UNDISTURBED. SEE FOLLOWING PLACEMENT SKETCHS.

2) CLEAN GROUND WIRE AND ROD WITH EMERY CLOTH TO PROVIDE GOOD ADHESION FOR WELD MATERIAL.

3) WELD WIRE (WIRES) TO APPROPRIATE PLACEMENT OF GROUND RODS. (SEE FOLLOWING PLACEMENT SKETCHS)

4) ATTACH GROUND WIRE TO ROD AS SHOWN. CLAMP ASSEMBLY SHOULD BE PLACED JUST ABOVE JUNCTION BOX BASE. (IMPORTANT: SURFACE UNDER CLAMP ASSEMBLY MUST BE FREE OF DIRT, PAINT, RUST, ETC.) CLEAN ALL BARE METAL WITH EMERY CLOTH.

5) ALL GROUND WIRE RUNS MUST BE AS DIRECT AS POSSIBLE, FREE OF UNNECESSARY LOOPS AND BENDS. BENDS IN ALL GROUND WIRES SHOULD NOT HAVE A RADIUS LESS THAN 8 INCHES.

6) ALL GROUND WIRE TO BE #6 AWG SOLID COPPER WIRE.

7) GROUND RODS TO BE DRIVEN 6 TO 12 INCHES BELOW GROUND LEVEL.

8) MATERIAL QUANTITIES TO BE DETERMINED BY SITE SPECIFIC APPLICATION NEEDS.

MATERIAL ORDERING INFORMATION

ITEM	DESCRIPTION	QTY.	MANUFACTURER	MANUFACTURER P/N
1	CLAMP, GROUNDING ASSY. F/ 4" TO 8" MASTS (ALU. ONLY)	-	ERICO	SBBBS2A8C1C96
	CLAMP, GROUNDING ASSY. F/ 4" TO 12" MASTS (ALU. ONLY)	-	ERICO	SBBBS2A12C1C96
2	GROUND ROD, 3/4" X 8'-0"	-	ERICO	613480
3	ONE SHOT CONNECTION F/ 3/4" GROUND ROD - TYPE NX 4 WIRE #6 AWG		ERICO	SBNX11810
	ONE SHOT CONNECTION F/ 3/4" GROUND ROD - TYPE NT 3 WIRE #6 AWG		ERICO	SBNT11610
	ONE SHOT CONNECTION F/ 3/4" GROUND ROD - TYPE GT 2 WIRE #6 AWG		ERICO	SBGT11610
4	ONE SHOT CONNECTION F/ PARALLEL TAP - TYPE PG 4 WIRE #6 AWG.		ERICO	SBPG11L

RAILAMERICA, INC.

APPROVED: WALTER FITHIAN DIRECTOR OF SIGNALS AND COMMUNICATIONS DATE: 02-16-04	TYPICAL GROUNDING PROCEDURES	DRAWING NUMBER RA-IS-002 SHEET 1 OF 3

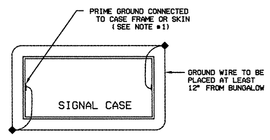

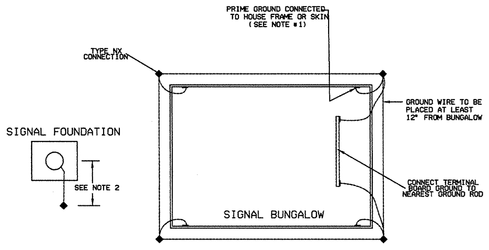

NOTES:

1) BUNGALOWS AND CASES WHICH ARE EQUIPPED WITH GROUND WIRES ATTACHED TO THE SKIN SHOULD BE CONNECTED DIRECTLY TO GROUND ROD.

2) SIGNAL GROUND WIRE SHOULD BE KEPT AS SHORT AS POSSIBLE WITH ROD BEING PLACED IN UNDISTURBED EARTH.

KEY:

◇ GROUND ROD CONNECTION

● GROUND ROD

—— GROUND WIRE (#6 AWG) SOLID BARE COPP

RAILAMERICA, INC.

APPROVED: WALTER FITHIAN DIRECTOR OF SIGNALS AND COMMUNICATIONS DATE: 02-16-04	TYPICAL GROUNDING PROCEDURES	DRAWING NUMBER RA- IS- 002 SHEET 2 OF 3

TYPICAL CROSSING LOCATION GROUNDING SCHEME

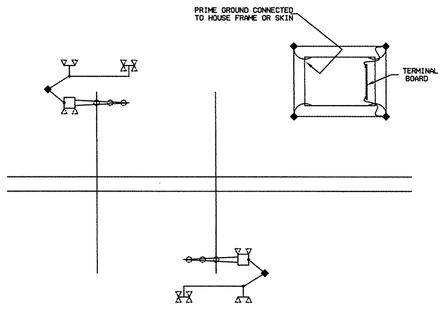

TYPICAL SIGNAL LOCATION GROUNDING SCHEME

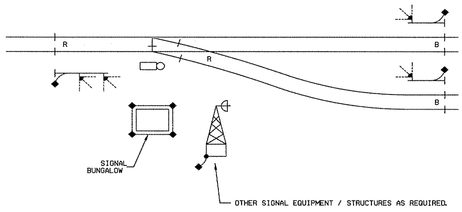

KEY:

- ◇ GROUND ROD CONNECTION
- ● GROUND ROD
- —— GROUND WIRE (#6 AWG) SOLID BARE COPP

RAILAMERICA, INC.

APPROVED: WALTER FITHIAN DIRECTOR OF SIGNALS AND COMMUNICATIONS DATE: 02-16-04	TYPICAL GROUNDING PROCEDURES	DRAWING NUMBER RA-IS-002 SHEET 3 OF 3

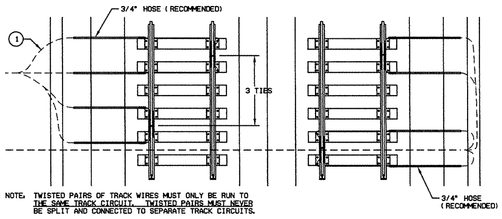

NOTE: TWISTED PAIRS OF TRACK WIRES MUST ONLY BE RUN TO THE SAME TRACK CIRCUIT. TWISTED PAIRS MUST NEVER BE SPLIT AND CONNECTED TO SEPARATE TRACK CIRCUITS.

SINGLE AND DOUBLE TRACK

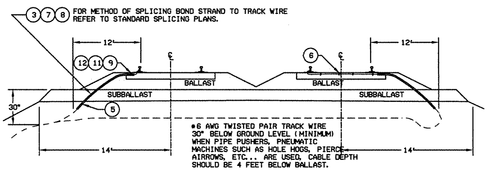

NOTES:

1) ALL TRACK WIRES ARE TO BE WEB WELDED.

2) USE CARE TO AVOID CONTAMINATION OF BALLAST WITH SURROUNDING SUB BALLAST OR OTHER SOIL.

RAILAMERICA, INC.

APPROVED: WALTER FITHIAN DIRECTOR OF SIGNALS AND COMMUNICATIONS DATE: 02-16-04	TYPICAL TRACK CONNECTIONS	DRAWING NUMBER RA-IS-003 SHEET 1 OF 2

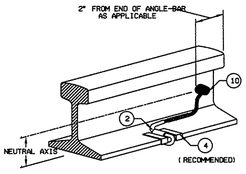

WEB WELD
CONNECTION

NOTES:

1) FOR HOLDING HOSE/BOND STRAND ALONG SIDE OF CONCRETE TIE USE ERICO CONCRETE TIE CLIP KIT, PART NUMBER SBX13BCONR, AS REQUIRED.

2) MATERIAL QUANTITIES TO BE DETERMINED BY SITE SPECIFIC APPLICATION NEEDS.

MATERIAL ORDERING INFORMATION

ITEM	DESCRIPTION	QTY.	MANUFACTURER	MANUFACTURER P/N
1	WIRE, 2 CONDUCTOR, #6 TWISTED TRACK	-	OKONITE	113-12-3933
2	BOND STRAND, BRONZE TINNED, INSULATED 7 x 19	-	ERICO	SBSBTINSUL
3	SLEEVE REDUCING, J GROOVE F/ 6 AWG TO 3/16" STRANDED WIRE	-	NATL TELEPHONE	2363J
4	TRACK CIRCUIT RETAINER CLIP	-	ERICO	SBA249B
5	HOSE, GENERAL PURPOSE, 2 BRAID A250 LB PSI, 3/4"	-	UNIROYAL	P290 OR EQUAL
6	STAPLE, 3/8" x 1-3/4"	-	GRAYBAR	LAR750434
7	TAPE, SPLICING LINERLESS HI-VOLTAGE 3/4" WIDE	-	3M	130C
8	TAPE, VINYL PLASTIC ADHESIVE 3/4" WIDE	-	3M	33 PLUS
9	SEALING COMPOUND	-	3M	PT-176
10	TRACK CONNECTION, WELDED	-	ERICO	SBTBBU4A
11	CLAMP, LOOP, INSULATED, 1-1/4"	-	COMMERCIAL	VARIOUS
12	DRIVE SCREW (USE WITH LOOP CLAMP)	-	COMMERCIAL	VARIOUS

RAILAMERICA, INC.

APPROVED: WALTER FITHIAN DIRECTOR OF SIGNALS AND COMMUNICATIONS DATE: 02-16-04	TYPICAL TRACK CONNECTIONS	DRAWING NUMBER RA-IS-003 SHEET 2 OF 2

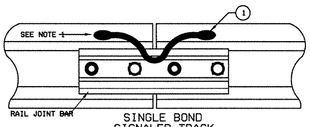

SINGLE BOND
SIGNALED TRACK

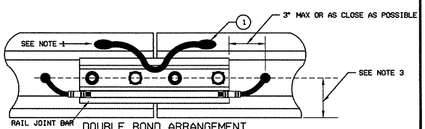

DOUBLE BOND ARRANGEMENT
NON-SIGNALED TRACK

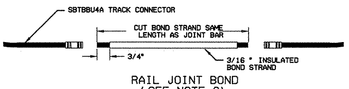

RAIL JOINT BOND
(SEE NOTE 6)

NOTES:

1) APPLY ERICO "XS" STYLE RAIL HEAD BOND WITH ERICO SBXS-T6-A JOINT BOND WELDER FITTED WITH SBM-456 MOLDS.

2) INSTALLATION TO BE IN ACCORDANCE WITH CURRENT ERICO BONDING INSTRUCTIONS FOR RAIL HEAD BONDS.

3) LOCATE + TRACK CONNECTION NO HIGHER THAN THE CENTERLINE OF RAIL BOLTS AND NO LOWER THAT 1/2" BELOW CENTERLINE OF RAIL BOLTS.

4) COAT RAIL CONNECTION WITH NO OXIDE GREASE AFTER INSTALLATION.

5) COAT RAIL HEAD BONDS WITH NO OXIDE GREASE AFTER INSTALLING.

6) CUT BOND STRAND TO PROPER LENGTH TO PREVENT DAMAGE FROM SPIKES OR BOLTS.

MATERIAL ORDERING INFORMATION

ITEM	DESCRIPTION	QTY.	MANUFACTURER	MANUFACTURER P/N
1	BOND, RAIL HEAD, 6-1/2" - TYPE XS		ERICO	SBS24982
2	CONNECTOR, TRACK, 3/16", WELDED		ERICO	SBTBBU4A
3	BOND STRAND, 3/16", INSULATED, 8 STRAND			

RAILAMERICA, INC.

APPROVED: WALTER FITHIAN DIRECTOR OF SIGNALS AND COMMUNICATIONS DATE: 02-16-04	TRACK BONDING METHOD JOINTED RAIL	DRAWING NUMBER RA-IS-008 SHEET 1 OF 1