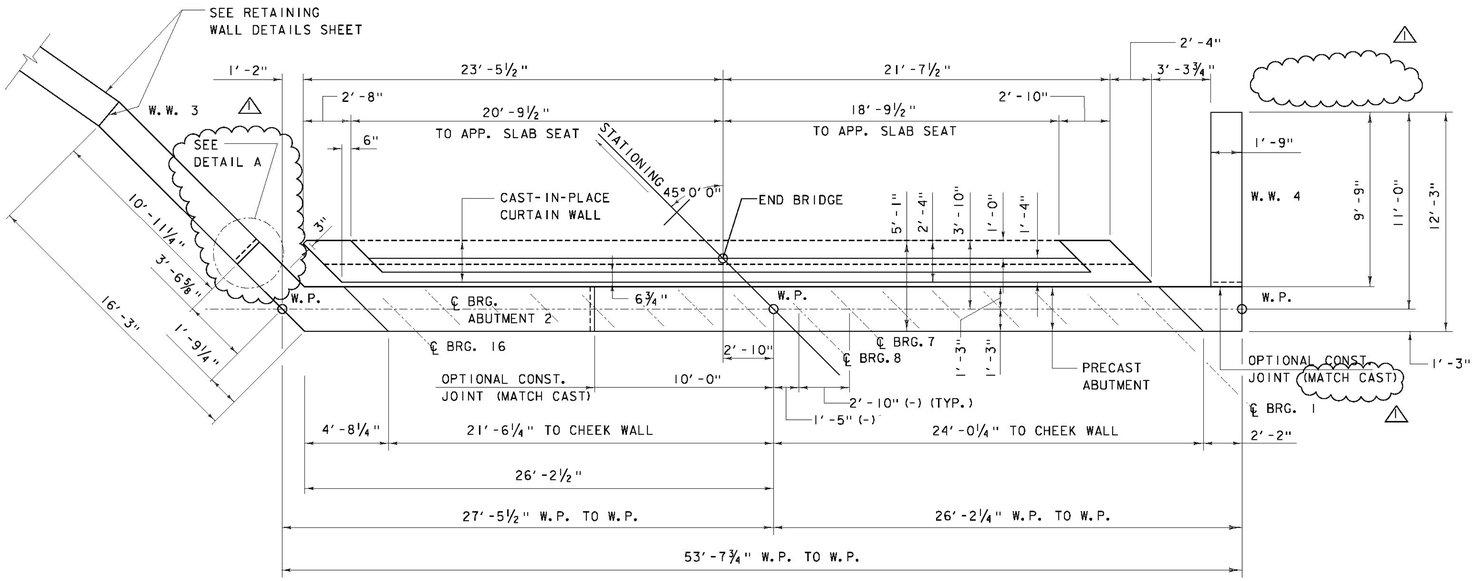

ABUTMENT #2 PLAN (PCU 6)

SCALE: 1/4" = 1'-0"

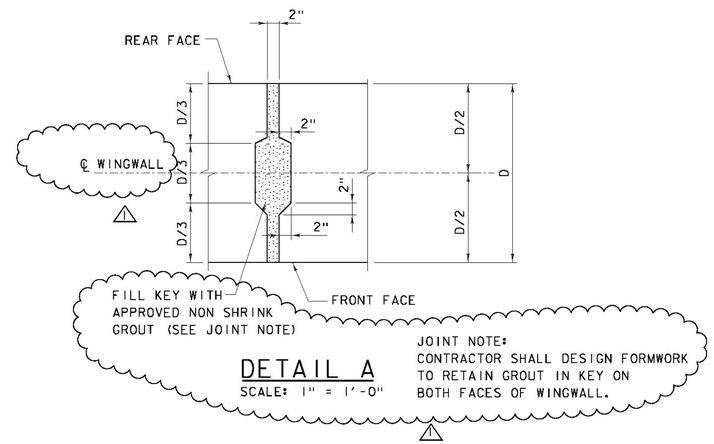

DETAIL A

SCALE: 1" = 1'-0"

ELEVATIONS

SEE NOTE 2

ELEV "A"	1000.98	ELEV "G"	995.64
ELEV "B"	995.80	ELEV "H"	1000.29
ELEV "C"	989.00	ELEV "I"	998.96
ELEV "D"	1000.66	ELEV "J"	998.54
ELEV "E"	993.00	ELEV "K"	998.82
ELEV "F"	995.48		

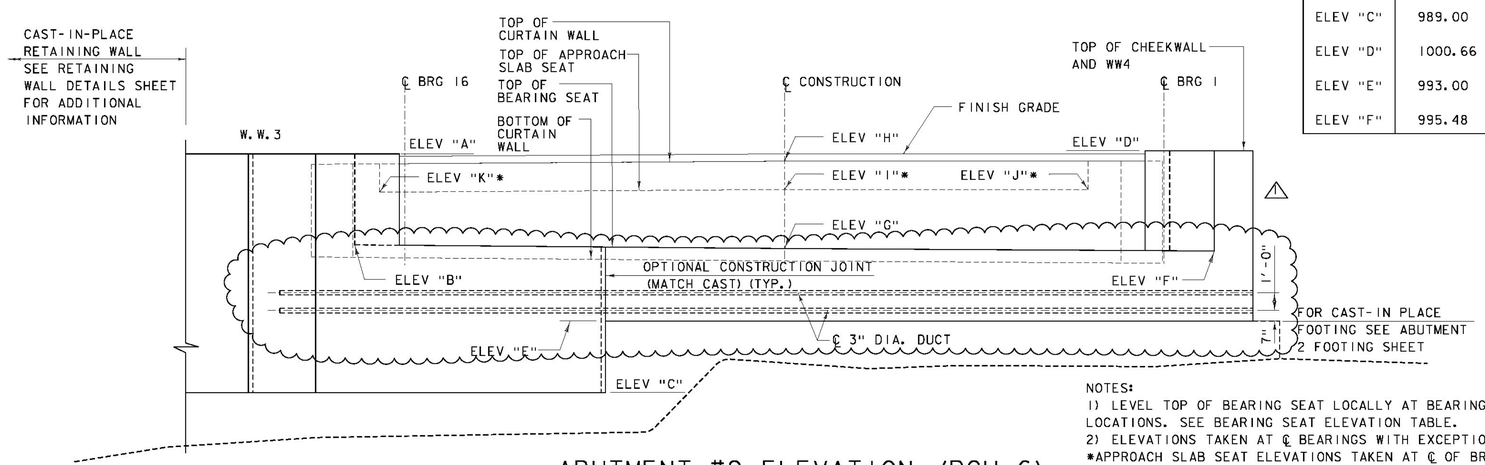

NOTES:
1) LEVEL TOP OF BEARING SEAT LOCALLY AT BEARING PAD LOCATIONS. SEE BEARING SEAT ELEVATION TABLE.
2) ELEVATIONS TAKEN AT ℄ BEARINGS WITH EXCEPTION OF:
*APPROACH SLAB SEAT ELEVATIONS TAKEN AT ℄ OF BRACKET.
ELEVATION "H" TAKEN AT END BRIDGE STATION.

ABUTMENT #2 ELEVATION (PCU 6)

SCALE: 1/4" = 1'-0"

BEARING SEAT ELEVATION TABLE

Bearing	1	2	3	4	5	6	7	8	9	10	11	12	13	14	15	16
Elevation	995.49	995.51	995.53	995.55	995.57	995.59	995.61	995.63	995.65	995.67	995.69	995.71	995.73	995.75	995.77	995.79

⚠1 REVISED PRECAST ABUTMENT CONNECTORS - 1/22/2015

PARSONS BRINCKERHOFF
650 ELM STREET
MANCHESTER, NH 03101

PROJECT NAME: LINCOLN
PROJECT NUMBER: BRF 0188 (8)

FILE NAME: z10J066sub2.dgn
PROJECT LEADER: G.K.DONINGTON
DESIGNED BY: K. JAMES
ABUTMENT 2 PLAN

PLOT DATE: 8-DEC-2014
DRAWN BY: W GERHOLD
CHECKED BY: R GAUDREAU
SHEET 31 OF 62