# STATE OF VERMONT
# AGENCY OF TRANSPORTATION

# PROPOSED IMPROVEMENT
# BRIDGE PROJECT
# TOWN OF LINCOLN
# COUNTY OF ADDISON
# TH 1 (RURAL MAJOR COLLECTOR)
# BRIDGE #19

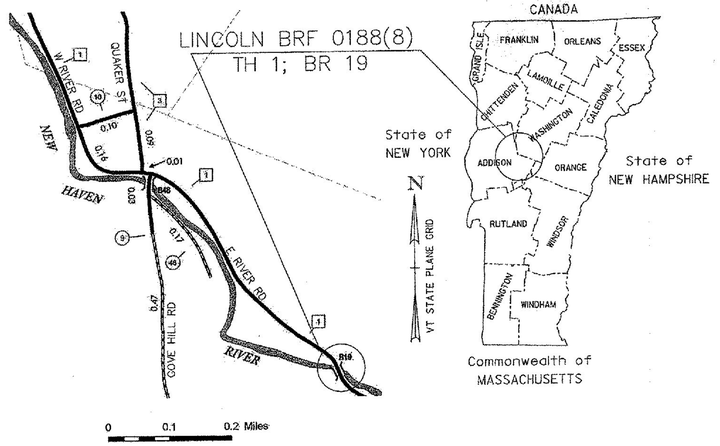


PROJECT LOCATION: BEGINNING AT A POINT ON TH 1 (EAST RIVER ROAD) APPROXIMATELY 0.5 MILES SOUTH OF ITS JUNCTION WITH COVE HILL ROAD AND PROCEEDING SOUTHERLY FOR APPROXIMATELY 0.1 MILES ALONG EAST RIVER ROAD.

PROJECT DESCRIPTION: REPLACE EXISTING BRIDGE WITH A NEW WIDENED BRIDGE ON AN ALIGNMENT SIMILAR TO EXISTING INCLUDING RELATED CHANNEL AND APPROACH WORK.

LENGTH OF STRUCTURE: 128.01 FEET
LENGTH OF ROADWAY: 471.99 FEET
LENGTH OF PROJECT: 600.00 FEET




SCALE 1" = 25'-0
25 0 25

RECORD PLANS

CONTRACTOR: J. A. MCDONALD INC. – LYNDON CENTER, VT
RESIDENT ENGINEER: PHILLIP HARRINGTON
CONSTRUCTION BEGAN: JUNE 8, 2015
CONSTRUCTION COMPLETE: SEPTEMBER 25, 2015
RECORD PLANS BY: PHILLIP HARRINGTON & KEVIN KING

I HEREBY CERTIFY THAT ALL THE CONSTRUCTION REQUIRED BY THIS SET OF DRAWINGS HAS BEEN ACCOMPLISHED AS INDICATED HEREIN.

BY Phy Harrn RESIDENT ENGINEER
DATE 03/03/17

NOTE: Any further information concerning final quantities, amounts or other details relative to this project may be found at Central Files in the electronic archives.

CONSTRUCTION IS TO BE CARRIED ON IN ACCORDANCE WITH THESE PLANS AND THE STANDARD SPECIFICATIONS FOR CONSTRUCTION DATED 2011, AS APPROVED BY THE FEDERAL HIGHWAY ADMINISTRATION ON JULY 20, 2011 FOR USE ON THIS PROJECT, INCLUDING ALL SUBSEQUENT REVISIONS AND SUCH REVISED SPECIFICATIONS AND SPECIAL PROVISIONS AS ARE INCORPORATED IN THESE PLANS.

QUALITY ASSURANCE PROGRAM : LEVEL 2

SURVEYED BY : VERMONT SURVEY & ENGINEERING, INC.
SURVEYED DATE : 11/16/2010

DATUM
VERTICAL NAVD 88 (GEOID) 9 FT
HORIZONTAL NAD 83 (CORS) SPC (4400VT) sFT

STATE OF VERMONT
GRAHAM K. DONNISTON
NO. 5133
STRUCTURAL
LICENSED PROFESSIONAL ENGINEER
12/3/14

PARSONS BRINCKERHOFF
650 ELM STREET
MANCHESTER, NH 03101

DIRECTOR OF PROJECT DELIVERY
APPROVED [signature] DATE 12/10/2014

PROJECT MANAGER : **TODD SUMNER**

PROJECT NAME : **LINCOLN**
PROJECT NUMBER : **BRF 0188 (8)**

SHEET 1 OF 62 SHEETS

STATE OF VERMONT
AGENCY OF TRANSPORTATION

# PRELIMINARY INFORMATION SHEET (BRIDGE)

Version 12.01.01c

**LRFD**

## INDEX OF SHEETS

### PLAN SHEETS


| | |
|---|---|
| 1 | TITLE SHEET |
| 2 | PRELIMINARY INFORMATION SHEET |
| 3 - 4 | TYPICAL SECTIONS |
| 5 | GENERAL NOTES |
| 6 | LEGEND SHEET |
| 7 - 8 | QUANTITY SHEETS |
| 9 | SURVEY TIE SHEET |
| 10 - 11 | LAYOUT SHEETS |
| 12 - 13 | PROFILE SHEETS |
| 14 - 17 | TRAFFIC CONTROL SHEETS |
| 18 | BORING LOCATION PLAN |
| 19 | BORING LOG SHEET |
| 20 | PLAN AND ELEVATION SHEET |
| 21 | FRAMING PLAN |
| 22 | DECK REINFORCEMENT SHEET |
| 23 | BOX BEAM DETAILS SHEET 1 |
| 24 | BOX BEAM DETAILS SHEET 2 |
| 25 | ELASTOMERIC BEARING DETAILS |
| 26 | APPROACH SLAB DETAILS |
| 27 | ABUTMENT 1 FOOTING PLAN |
| 28 | ABUTMENT 1 PLAN |
| 29 | ABUTMENT 1 REINFORCEMENT PLAN |
| 30 | ABUTMENT 2 FOOTING PLAN |
| 31 | ABUTMENT 2 PLAN |
| 32 | ABUTMENT 2 REINFORCEMENT PLAN |
| 33 | RETAINING WALL DETAILS SHEET |
| 34 | CURTAIN WALL DETAILS SHEET |
| 35 | REINFORCING STEEL SCHEDULE |
| 36 - 43 | MAINLINE CROSS SECTIONS |
| 44 | BANKING DIAGRAM & MATERIAL TRANSITION SHEET |
| 45- 47 | CHANNEL CROSS SECTIONS |
| 48 | EPSC PLAN NARRATIVE |
| 49 - 50 | EPSC EXISTING CONDITIONS SITE PLAN |
| 51 - 52 | EPSC CONSTRUCTION CONDITIONS SITE PLAN |
| 53 - 54 | EPSC FINAL CONDITIONS SITE PLAN |
| 55 - 57 | EPSC DETAILS |
| 58 | 4 RAIL BOX BEAM BRIDGE RAIL |
| 59 | 4 RAIL BOX BEAM APPROACH RAIL |
| 60 | R.O.W. DETAIL SHEET #1 |
| 61 | R.O.W. LAYOUT SHEET 1 |
| 62 | R.O.W. LAYOUT SHEET 2 |


### STANDARDS LIST


| | | |
|---|---|---|
| A-60 | STANDARD TYPICAL FOR SLOPES IN SOLID ROCK EXCAVATION DRILLING AND BLASTING OF SOLID ROCK SUBGRADE | 06-01-1994 |
| A-76 | STANDARDS FOR TOWN & DEVELOPMENT ROADS | 03-03-2003 |
| B-5 | SLOPE GRADING, EMBANKMENTS, MUCK | 06-01-1994 |
| C-10 | CURBING | 02-11-2008 |
| D-1 | PRECAST REINFORCED CONCRETE DROP INLET DETAILS | 06-01-1994 |
| D-15 | PRECAST REINFORCED CONCRETE M-H GRATES, CAST IRON GRATE WITH FRAME, TYPE D AND E | 06-01-1994 |
| D-33 | REINFORCED CONCRETE STRAIGHT HEADWALL | 03-12-2007 |
| E-121 | STANDARD SIGN PLACEMENT - CONVENTIONAL ROAD | 08-08-1995 |
| E-193 | PAVEMENT MARKING DETAILS | 08-18-1995 |
| G-1 | STEEL BEAM GUARDRAIL DETAILS (POST, DELINEATOR, TYPICALS) | 02-10-2014 |
| G-1D | STEEL BEAM GUARDRAIL DETAILS (END TERMINAL, ANCHOR, MEDIAN) | 02-10-2014 |
| G-15 | BREAKAWAY CABLE TERMINAL WITH STEEL POSTS | 06-01-1994 |
| G-19 | GENERIC GRADING PLANS FOR GUARDRAIL END TERMINALS | 11-15-2002 |
| T-1 | TRAFFIC CONTROL GENERAL NOTES | 08-06-2012 |
| T-10 | CONVENTIONAL ROADS CONSTRUCTION, APPROACH SIGNING | 08-06-2012 |
| T-28 | CONSTRUCTION SIGN DETAILS | 08-06-2012 |
| T-29 | CONSTRUCTION SIGN DETAILS | 08-06-2012 |
| T-30 | CONSTRUCTION SIGN DETAILS | 08-06-2012 |
| T-31 | CONSTRUCTION SIGN DETAILS | 08-06-2012 |
| T-42 | BRIDGE NUMBER PLAQUE | 04-09-2014 |
| T-45 | SQUARE TUBE SIGN POST AND ANCHOR | 01-02-2013 |
| SD-501.00 | CONCRETE DETAILS AND NOTES | 02-09-2012 |
| SD-502.00 | CONCRETE DETAILS AND NOTES | 10-10-2012 |
| SD-516.10 | BRIDGE JOINT ASPHALTIC PLUG | 08-29-2011 |


## FINAL HYDRAULIC REPORT

### HYDROLOGIC DATA

Date: 9/26/2011

DRAINAGE AREA : 28 sq mi
CHARACTER OF TERRAIN : wooded, mountainous, rural
STREAM CHARACTERISTICS : semi-alluvial, straight, not braided or anabranched
NATURE OF STREAMBED : mostly cobbles

PEAK FLOW DATA

| | | | |
|---|---|---|---|
| Q 2.33 = | 1006 cfs | Q 50 = | 2630 cfs |
| Q 10 = | 1720 cfs | Q 100 = | 3070 cfs |
| Q 25 = | 2220 cfs | Q 500 = | 4210 cfs |

DATE OF FLOOD OF RECORD unknown
ESTIMATED DISCHARGE: unknown
WATER SURFACE ELEV.: unknown
NATURAL STREAM VELOCITY : @ Q50 = 8.7 fps
ICE CONDITIONS : light to moderate
DEBRIS: moderate
DOES THE STREAM REACH MAXIMUM HIGHWATER ELEV. RAPIDLY? unknown
IS ORDINARY RISE RAPID? unknown
IS STAGE AFFECTED BY UPSTREAM OR DOWNSTREAM CONDITIONS? no
IF YES, DESCRIBE:

WATERSHED STORAGE: 1% HEADWATERS:
UNIFORM: X
IMMEDIATELY ABOVE SITE:

### EXISTING STRUCTURE INFORMATION

STRUCTURE TYPE: 2 span rolled beam - on tangent
YEAR BUILT: 1934
CLEAR SPAN(NORMAL TO STREAM): 81.4 ft
VERTICAL CLEARANCE ABOVE STREAMBED: 17.6 ft
WATERWAY OF FULL OPENING: 1107.6 sf
DISPOSITION OF STRUCTURE:
TYPE OF MATERIAL UNDER SUBSTRUCTURE: ledge

WATER SURFACE ELEVATIONS AT:

| | | | |
|---|---|---|---|
| Q2.33 = | 983.4 | VELOCITY = | 5.6 fps |
| Q10 = | 984.6 | " | 7.2 fps |
| Q25 = | 985.4 | " | 8.1 fps |
| Q50 = | 985.9 | " | 8.7 fps |
| Q100 = | 986.5 | " | 9.3 fps |

LONG TERM STREAMBED CHANGES: none noted

IS THE ROADWAY OVERTOPPED BELOW Q100: no
FREQUENCY: n/a
RELIEF ELEVATION: n/a
DISCHARGE OVER ROAD @Q100: no

### UPSTREAM STRUCTURE

TOWN: Lincoln DISTANCE: 3140 ft
HIGHWAY # : TH 1 (East River Road) STRUCTURE #: 17
CLEAR SPAN: 69 ft CLEAR HEIGHT: 22
YEAR BUILT: Substruct. 1929, Superstruct. 2003 FULL WATERWAY: 1280 SF
STRUCTURE TYPE: Precast concrete substructures w/ precast PS concrete box beams

### DOWNSTREAM STRUCTURE

TOWN: Lincoln DISTANCE: 2630 ft
HIGHWAY # : TH 9 (Gove Hill Road) STRUCTURE #: 48
CLEAR SPAN: 67.9 ft CLEAR HEIGHT: 10.5 ft
YEAR BUILT: 2009 FULL WATERWAY: 593.1 sf
STRUCTURE TYPE: steel beam bridge

### PROPOSED STRUCTURE

STRUCTURE TYPE: Simple Span Prestressed Box Beam

CLEAR SPAN(NORMAL TO STREAM): 84.9 ft
VERTICAL CLEARANCE ABOVE STREAMBED: 18.1ft
WATERWAY OF FULL OPENING: 1207.9 sf

WATER SURFACE ELEVATIONS AT:

| | | | |
|---|---|---|---|
| Q2.33 = | 983.2 | VELOCITY= | 5.6 fps |
| Q10 = | 984.2 | " | 7.2 fps |
| Q25 = | 984.8 | " | 8.1 fps |
| Q50 = | 985.3 | " | 8.7 fps |
| Q100 = | 985.7 | " | 9.3 fps |

IS THE ROADWAY OVERTOPPED BELOW Q100: no
FREQUENCY: n/a
RELIEF ELEVATION: n/a
DISCHARGE OVER ROAD @Q100: no

AVERAGE LOW ELEVATION OF SUPERSTRUCTURE: 995.9
VERTICAL CLEARANCE: @ Q50 = 10.0 ft

SCOUR: structure is founded on ledge

REQUIRED CHANNEL PROTECTION: Stone Fill Type IV

### PERMIT INFORMATION

| | | |
|---|---|---|
| AVERAGE DAILY FLOW: | 62 cfs | DEPTH OR ELEVATION: |
| ORDINARY LOW WATER: | 29 cfs | 980.19 |
| ORDINARY HIGH WATER: | 1440 cfs | 984.19 |

### TEMPORARY BRIDGE REQUIREMENTS

STRUCTURE TYPE: n/a
CLEAR SPAN (NORMAL TO STREAM): n/a
VERTICAL CLEARANCE ABOVE STREAMBED: n/a
WATERWAY AREA OF FULL OPENING: n/a

### ADDITIONAL INFORMATION

### TRAFFIC MAINTENANCE NOTES

1. THE BRIDGE WILL BE CLOSED TO TRAFFIC DURING CONSTRUCTION.
2. TRAFFIC SIGNALS ARE NOT NECESSARY.
3. SIDEWALKS ARE NOT NECESSARY.

### DESIGN VALUES

| | | | |
|---|---|---|---|
| 1. | DESIGN LIVE LOAD | | HL-93 |
| 2. | FUTURE PAVEMENT | $d_p$: | 2.5 INCH |
| 3. | DESIGN SPAN | $L$: | 120.00 FT |
| 4. | MIN. MID-SPAN POS. CAMBER @ RELEASE (PRESTRESSED UNITS) | $\Delta$: | +1.51 inch |
| 5. | PRESTRESSING STRAND (0.60 INCH DIAMETER - LOW RELAX) | $f_y$: | 270 KSI |
| 6. | PRESTRESSED CONCRETE STRENGTH | $f'_c$: | 8.0 KSI |
| 7. | PRESTRESSED CONCRETE RELEASE STRENGTH | $f'_{ci}$: | 6.0 KSI |
| 8. | CONCRETE, HIGH PERFORMANCE CLASS AA | $f'_c$: | --- |
| 9. | CONCRETE, HIGH PERFORMANCE CLASS A | $f'_c$: | 4.0 KSI |
| 10. | CONCRETE, HIGH PERFORMANCE CLASS B | $f'_c$: | 3.5 KSI |
| 11. | CONCRETE, CLASS C | $f'_c$: | --- |
| 12. | REINFORCING STEEL | $f_y$: | 60 KSI |
| 13. | STRUCTURAL STEEL AASHTO M270 | $f_y$: | --- |
| 14. | SOIL UNIT WEIGHT | $\gamma$: | 0.140 KCF |
| 15. | NOMINAL BEARING RESISTANCE OF SOIL | $q_n$: | --- |
| 16. | SOIL BEARING RESISTANCE FACTOR (REFER TO AASHTO LRFD) | $\phi$: | --- |
| 17. | NOMINAL BEARING RESISTANCE OF ROCK | $q_n$: | 70.0 KSF |
| 18. | ROCK BEARING RESISTANCE FACTOR (REFER TO AASHTO LRFD) | $\phi$: | 0.45 |
| 19. | NOMINAL AXIAL PILE RESISTANCE | $q_p$: | --- |
| 20. | PILE YIELD STRENGTH ASTM A572 | $f_y$: | --- |
| 21. | PILE SIZE | | --- |
| 22. | EST. PILE LENGTH | $L_p$: | |
| 23. | PILE RESISTANCE FACTOR | $\phi$: | --- |
| 24. | LATERAL PILE DEFLECTION | $\Delta$: | --- |
| 25. | BASIC WIND SPEED | | --- |
| 26. | MINIMUM GROUND SNOW LOAD | $p_g$: | --- |
| 27. | SEISMIC DATA PGA: 0.085 | $S_s$: | 0.18 |
| | | $S_1$: | 0.051 |

### LRFR LOAD RATING FACTORS

| LOADING LEVELS | TRUCK | | | | | | |
|---|---|---|---|---|---|---|---|
| | H-20 | HL-93 | 3S2 | 6 AXLE | 3A. STR. | 4A. | 5A. SEMI |
| TONNAGE | 20 | 36 | 36 | 66 | 30 | 34. | 38 |
| INVENTORY | 1.65 | 1.30 | | | | | |
| POSTING | | | | | | | |
| OPERATING | 2.14 | 2.14 | 3.51 | 1.92 | 2.81 | 3.23 | 3.18 |
| COMMENTS: | | | | | | | |

### AS BUILT "REBAR" DETAILS

| LEVEL I | LEVEL II | LEVEL III |
|---|---|---|
| TYPE: | TYPE: | TYPE: |
| GRADE: | GRADE: | GRADE: |

### TRAFFIC DATA

| YEAR | ADT | DHV | % D | % T | ADTT |
|---|---|---|---|---|---|
| 2014 | 1300 | 150 | 60 | 8.1 | 110 |
| 2034 | 1400 | 160 | 60 | 10.7 | 160 |

20 year ESAL for flexible pavement from to 2034 : 633000
40 year ESAL for flexible pavement from to 2054 : 1407000
Design Speed : 30 mph


PARSONS BRINCKERHOFF
650 ELM STREET
MANCHESTER, NH 03101


PROJECT NAME: **LINCOLN**
PROJECT NUMBER: **BRF 0188(8)**

FILE NAME: **z10j066pi.xls** PLOT DATE: **8-DEC-2014**
PROJECT LEADER: **K. DONINGTON** DRAWN BY: **W. GERHOLD**
DESIGNED BY: **K. JAMES** CHECKED BY: **A. STOCKIN**
**PRELIMINARY INFORMATION SHEET** SHEET 2 OF 62

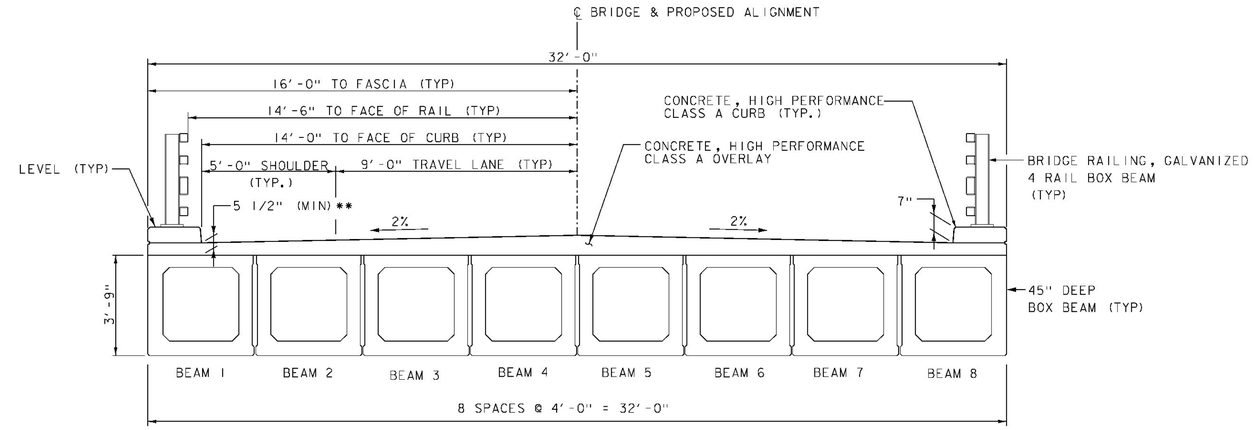


** 5" STRUCTURAL 1/2" WEARING (MIN. @ FACE OF CURB AT MIDSPAN BEAM 1 & MIDSPAN BEAM 8)

## BRIDGE TYPICAL

SCALE 3/8" = 1'-0

0 1 2 3 4

**NOTES**

MARKER POSTS: TO BE PLACED AS INDICATED OR AS DIRECTED BY THE ENGINEER, ITEM 619.16 STEEL MARKER POSTS.

SLOPE ROUNDING: ALL CUT SLOPES TO BE ROUNDED IN ACCORDANCE WITH STANDARD SHEET B - 5.

TACK COAT: EMULSIFIED ASPHALT IS TO BE APPLIED AT THE RATE OF 0.015 GAL/SY ON ALL COLD PLANED SURFACES AND BETWEEN SUCCESSIVE COURSES OF PAVEMENT AS DIRECTED BY THE ENGINEER.

| MATERIAL ITEM | THICKNESS TOLERANCE |
|---|---|
| PAVEMENT (TOTAL DEPTH) | +/- 1/4" |
| SUBBASE | +/- 1" |
| SAND BORROW | +/- 1" |

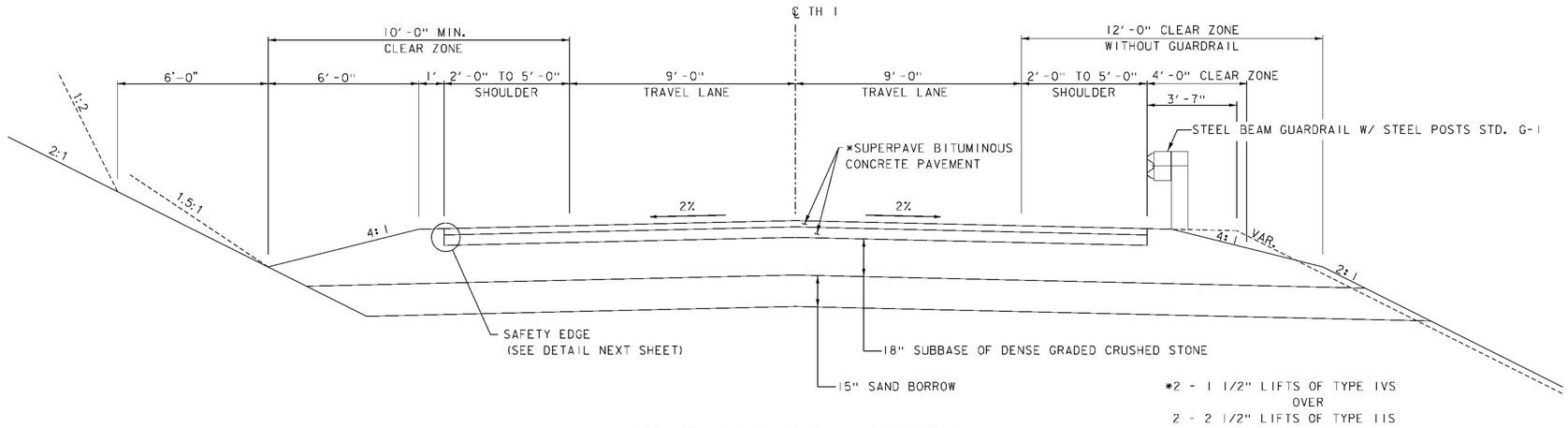


## ROADWAY TYPICAL SECTION

SCALE 3/8" = 1'-0

0 1 2 3 4

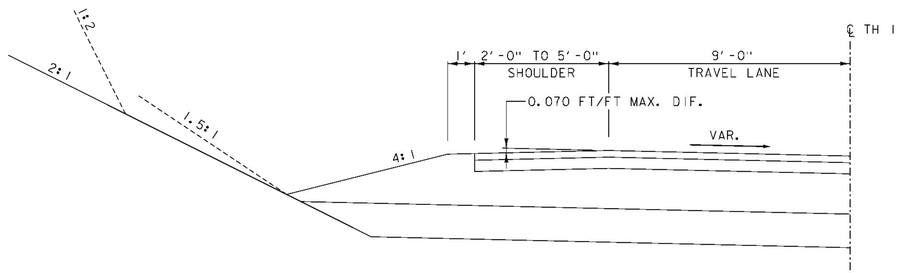


## HIGH SIDE OF BANKED SECTION

SCALE 3/8" = 1'-0

0 1 2 3 4

PARSONS BRINCKERHOFF
650 ELM STREET
MANCHESTER, NH 03101

PROJECT NAME: LINCOLN
PROJECT NUMBER: BRF 0188 (8)

FILE NAME: z10J066typ.dgn
PROJECT LEADER: G.K. DONINGTON
DESIGNED BY: P. ARMANO
TYPICAL SECTIONS (1)

PLOT DATE: 8-DEC-2014
DRAWN BY: W. GERHOLD
CHECKED BY: A. STOCKIN
SHEET 3 OF 62

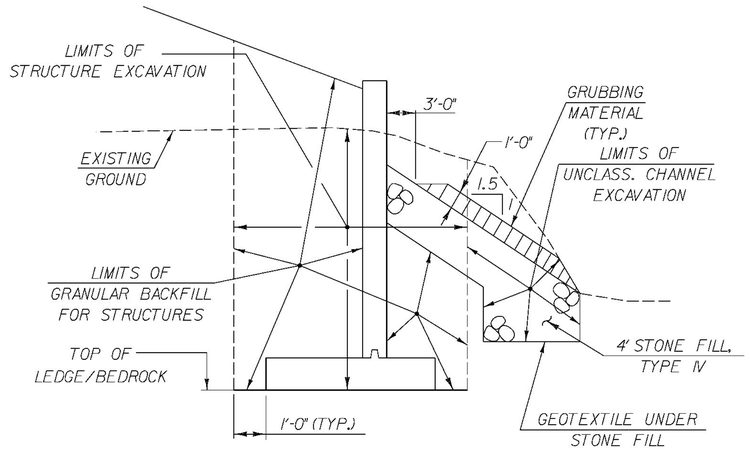


## TYPICAL WINGWALL SECTION

(NOT TO SCALE)

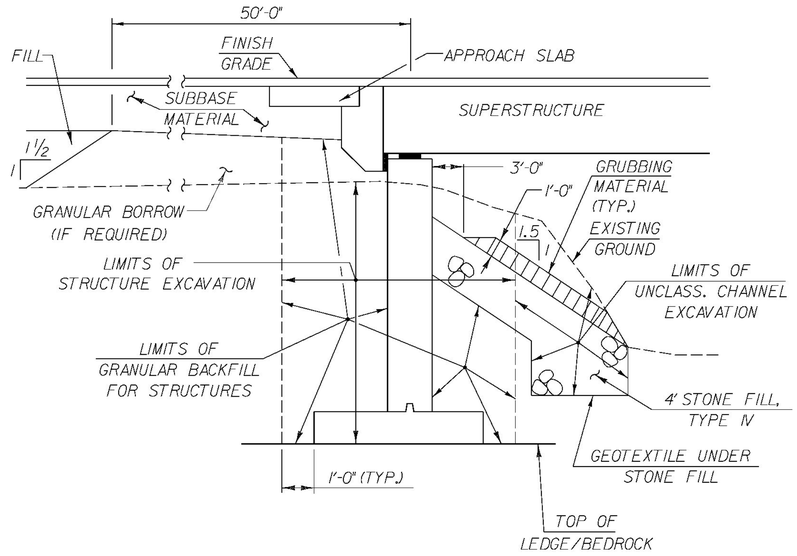


## TYPICAL ABUTMENT SECTION

(NOT TO SCALE)

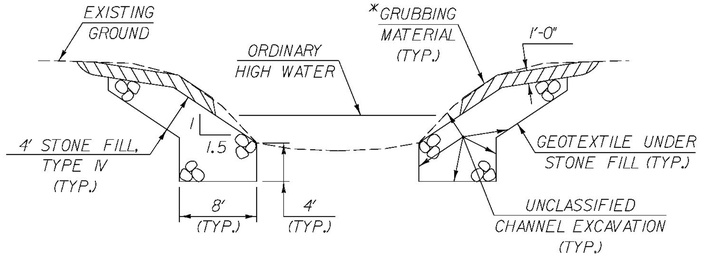


## TYPICAL CHANNEL SECTION

(NOT TO SCALE)

*WHENEVER CHANNEL SLOPE INTERSECTS ROADWAY SUBBASE, GRUBBING MATERIAL SHALL BEGIN AT THE BOTTOM OF SUBBASE.

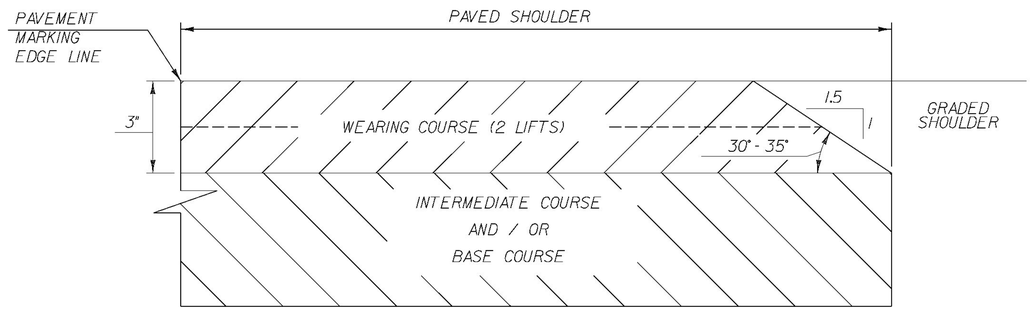


## SAFETY EDGE DETAIL

(NOT TO SCALE)

THE EDGE OF PAVEMENT SHALL BE FORMED IN SUCH A WAY THAT THE BITUMINOUS CONCRETE PAVEMENT IS EXTRUDED OR COMPRESSED TO FORM THE 30 TO 35 DEGREE ANGLE. DEVICES THAT SIMPLY STRIKE-OFF THE MIX WITHOUT PROVIDING ANY COMPACTIVE EFFORT WILL NOT BE ALLOWED.

THE PAVED SHOULDER EXTENDS FROM THE EDGE OF TRAVELED WAY TO THE EDGE OF THE WEARING COURSE, INCLUDING THE "SAFETY EDGE".

PROJECT NAME: LINCOLN

PROJECT NUMBER: BRF 0188 (8)

PARSONS BRINCKERHOFF
650 ELM STREET
MANCHESTER, NH 03101

FILE NAME: z10j066typ.dgn
PROJECT LEADER: G.K. DONINGTON
DESIGNED BY: P. ARMANO
TYPICAL SECTIONS (2)

PLOT DATE: 8-DEC-2014
DRAWN BY: W. GERHOLD
CHECKED BY: A. STOCKIN
SHEET 4 OF 62

GENERAL

1. ALL MATERIALS AND CONSTRUCTION SHALL CONFORM TO THE STATE OF VERMONT AGENCY OF TRANSPORTATION 2011 STANDARD SPECIFICATIONS FOR CONSTRUCTION, AND THE 2012 AASHTO LRFD BRIDGE DESIGN SPECIFICATIONS AND THEIR LATEST REVISIONS.
2. THE BRIDGE IS DESIGNED FOR HL-93 LIVE LOAD.
3. ITEM 529.15 "REMOVAL OF STRUCTURE" SHALL BE USED FOR THE REMOVAL OF THE EXISTING STRUCTURE (SUPERSTRUCTURE AND PIER) AND ANY PORTION OF THE ABUTMENTS AND WINGWALLS/RETAINING WALLS OUTSIDE THE LIMITS OF STRUCTURE EXCAVATION OR UNCLASSIFIED CHANNEL EXCAVATION. PIER SHALL BE REMOVED TO 2 FEET BELOW EXISTING GROUND, OR TO BEDROCK IF BEDROCK IS ENCOUNTERED LESS THAN 2 FEET BELOW EXISTING GROUND. ALL WORK RELATED TO THE PIER REMOVAL, INCLUDING INSTALLATION AND REMOVAL OF TEMPORARY STONE FILL (CLEAN) TYPE 1, SHALL BE PAID UNDER ITEM 529.15 "REMOVAL OF STRUCTURE".
4. ALL DIMENSIONS SHOWN IN THE PLANS ARE HORIZONTAL OR VERTICAL AND ARE GIVEN AT 68 DEGREES FAHRENHEIT, UNLESS NOTED OTHERWISE.
5. SEE THE PROJECT SPECIAL PROVISIONS FOR THE PROJECT SCHEDULE AND ALLOWABLE CLOSURE PERIOD.
6. THE EXISTING STRUCTURAL STEEL IS PAINTED WITH MATERIAL THAT MAY CONTAIN LEAD. THE CONTRACTOR SHALL FOLLOW ALL APPLICABLE REGULATIONS WHEN HANDLING AND WORKING WITH THIS STEEL. THE REMOVED STRUCTURAL STEEL IS THE PROPERTY OF THE CONTRACTOR. THE CONTRACTOR SHALL INDEMNIFY AND HOLD THE STATE, ITS OFFICERS, AND EMPLOYEES HARMLESS CONCERNING THE CONTRACTOR'S USE OR DISPOSAL OF THE REMOVED EXISTING STRUCTURAL STEEL.
7. ALL CORNERS OF CONCRETE SHALL BE CHAMFERED ¾" UNLESS NOTED OTHERWISE.
8. MODIFICATIONS TO EXISTING UTILITIES, INCLUDING UTILITY POLES AND AERIAL ELECTRIC, SHALL BE THE RESONSIBILITY OF THE UTILITY COMPANY. CONTRACTOR SHALL COORDINATE WITH UTILITY COMPANY TO IMPLEMENT ALL MODIFICATIONS. SEE THE UTILITY SPECIAL PROVISIONS AND CONSTRUCTION SEQUENCE NOTES FOR ADDITIONAL INFORMATION AND REQUIREMENTS.
9. THE METHOD OF FORMING FOR SUBSEQUENT POURS AFTER PLACING PRECAST/PRESTRESSED SUPERSTRUCTURE UNITS SHALL BE DETERMINED BY THE CONTRACTOR. THE CONTRACTOR IS ENCOURAGED TO WORK WITH THE FABRICATOR IF ADDITIONAL SUPPORTS MAY BE REQUIRED. IN NO CASE SHALL THE CONTRACTOR ATTACH ADDITIONAL FORM OR SCREED SUPPORTS BY DRILLING OR SIMILAR MEANS INTO ANY PRECAST/PRESTRESSED SUPERSTRUCTURE UNITS.
10. WATER REPELLENT, SILANE, SHALL BE APPLIED TO ALL EXPOSED CONCRETE (CAST-IN-PLACE AND PRECAST) SURFACES, EXCEPT FROM FACE OF CURB TO FACE OF CURB ON TOP OF THE CONCRETE BRIDGE DECK OVERLAY. SILANE SHALL BE APPLIED ON ALL EXPOSED SURFACES TO 1'-0" (MIN.) BELOW FINISH GRADE. SILANE FOR PRECAST ITEMS SHALL BE SHOP APPLIED AND PAYMENT SHALL BE INCLUDED IN THE UNIT BID PRICE FOR THE APPROPRIATE PRECAST ITEM. FOR SILANE APPLIED TO THE CAST-IN-PLACE CONCRETE RETAINING WALL AND ANY EXPOSED PORTIONS OF FOOTINGS, AS WELL AS CAST-IN-PLACE SUPERSTRUCTURE ELEMENTS (DECK FASCIA AND CURBS) PAYMENT SHALL BE MADE UNDER ITEM 514.10.

EARTHWORK:

1. BEDROCK IS PRESENT AT THE ABUTMENTS, WINGWALLS AND THE RETAINING WALL. REMOVAL OF BEDROCK TO ACCOMMODATE THE MINIMUM FOOTING THICKNESSES DETAILED IN THE PLANS SHALL BE PAID FOR UNDER ITEM 204.25 "STRUCTURE EXCAVATION".
2. "STONE FILL, TYPE IV", "GEOTEXTILE UNDER STONE FILL", AND "GRUBBING MATERIAL" UNDER THE BRIDGE AS SHOWN IN THE PLANS SHALL BE PLACED BEFORE THE NEW BEAMS ARE SET.
3. DO NOT EXCAVATE BEDROCK IN ORDER TO PLACE THE SPECIFIED DEPTH OF"STONE FILL, TYPE IV". FOR LOCATIONS WHERE THE SPECIFIED DEPTH OF "STONE FILL, TYPE IV" CAN NOT BE PLACED DUE TO PRESENCE OF BEDROCK, CONTRACTOR SHALL NOTIFY THE RESIDENT ENGINEER AND SHALL PLACE "STONE FILL, TYPE IV" AND RELATED ITEMS AS DIRECTED BY THE ENGINEER.
4. UPON COMPLETION OF THE EXCAVATION FOR SUBSTRUCTURES FOUNDED ON BEDROCK AND PRIOR TO PLACING FORMWORK, THE CONTRACTOR SHALL NOTIFY THE RESIDENT ENGINEER SO THAT THE RESIDENT ENGINEER MAY NOTIFY THE PROJECT MANAGER AND THE VTRANS STATE GEOLOGIST. THE GEOLOGIST WILL DETERMINE IF THE BEDROCK IS COMPETENT TO OBTAIN THE NOMINAL BEARING RESISTANCE AS SHOWN ON THE PLANS. THE CONTRACTOR SHALL NOTIFY THE RESIDENT ENGINEER AT LEAST 72 HRS PRIOR TO NEED FOR ANALYSIS.
5. BEDROCK THAT IS EXCAVATED FOR FOOTINGS SHALL BE EXCAVATED TO PROVIDE A LEVEL SURFACE, OR AS DIRECTED BY THE ENGINEER.
6. FOOTINGS SHALL BE FOUNDED ON BEDROCK WHICH HAS BEEN CLEANED OF ALL LOOSE ROCK AND DEBRIS TO ENSURE THAT SUBSTRUCTURES ARE PLACED ON COMPETENT ROCK.
7. IF SUITABLE BEDROCK ISN'T ENCOUNTERED UNTIL ELEVATIONS AS LOW AS THE FOLLOWING, THE CONTRACTOR SHALL NOTIFY THE RESIDENT ENGINEER SO THAT THE SUITABILITY OF THE SUBSTRUCTURE DESIGNS CAN BE EVALUATED FOR THE UNFORESEEN DESIGN CONDITIONS:
   a. ELEV. = 981.7 FOR ABUTMENT 1, INCLUDING WW1 & WW2
   b. ELEV. = 982.2 FOR ABUTMENT 2, INCLUDING WW3 & WW4
   c. ELEV. = 985.3 FOR TALLEST SECTION OF RETAINING WALL ADJACENT TO WW3
   d. ELEV. = 989.6 FOR SHORTEST SECTION OF CANTILEVER RETAINING WALL
8. IF BEDROCK IS ENCOUNTERED UNDER ROADWAY, IT SHALL BE REMOVED TO THE SUBGRADE ELEVATION AND SHALL BE PAID FOR UNDER ITEM 203.16. BEDROCK AT THE SUBGRADE ELEVATION SHALL BE DRILLED AND BLASTED AND SHALL BE PAID FOR UNDER ITEM 205.20. ⚠

SUBSTRUCTURES AND APPROACH SLABS:

1. THE UNIT PRICE FOR EACH PRECAST ABUTMENT SHALL INCLUDE ALL SEGMENTS INCLUDING THE ASSOCIATED PRECAST WINGWALLS AND ALL LABOR AND MATERIALS TO CONNECT WINGWALLS. THIS WORK SHALL BE PAID FOR UNDER ITEM 540.10, "PRECAST CONCRETE STRUCTURE (ABUTMENT #1)" OR "PRECAST CONCRETE STRUCTURE (ABUTMENT #2)" AS APPROPRIATE.
2. IF VERTICAL CONSTRUCTION JOINTS ARE REQUIRED BY THE CONTRACTOR FOR SHIPMENT OF THE ABUTMENTS AND/OR WINGWALLS, THEN THE SECTIONS SHALL BE KEYED AND MATCH CAST. A JOINT DETAIL SHALL BE SHOWN ON THE FABRICATION DRAWINGS.
3. CONTRACTOR/FABRICATOR SHALL SHOP VERIFY PROPER FIT OF ALL BRIDGE SUBSTRUCTURE ELEMENTS TO BE CONNECTED.
4. 4" DIAMETER WEEPHOLES SHALL BE PROVIDED IN ALL ABUTMENTS, WINGWALLS AND THE RETAINING WALL AT A MAXIMUM SPACING OF 10'-0". WEEPHOLES SHALL BE LEVEL AND SHALL BE LOCATED 1'-0" ABOVE THE TOP OF FOOTING ELEVATION.
5. REINFORCEMENT IN TOP OF ABUTMENTS SHALL BE CENTERED ABOUT THE ANCHOR RODS SO THAT NO REINFORCEMENT IS DAMAGED DURING ANCHOR ROD INSTALLATION.
6. CONTRACTOR SHALL PLACE LOAD DISTRIBUTING MATS BEHIND THE SUBSTRUCTURES FOR CONSTRUCTION ACTIVITIES SUCH AS DELIVERY AND INSTALLATION OF PRESTRESSED BOX BEAMS, ETC., WHEN LOADS ARE WITHIN 25' FROM THE BACK OF THE ABUTMENT AND/OR WINGWALLS. CONTRACTOR SHALL PROVIDE CALCULATIONS AND PLANS TO DOCUMENT SUITABILITY OF THE SUBSTRUCTURES FOR ALL CONSTRUCTION LOADS IN ACCORDANCE WITH SECTION 105. LOAD DISTRIBUTING MATS SHALL BE PAID UNDER ITEM 510.21.
7. CONTRACTOR IS ADVISED THAT THE BEDROCK ELEVATIONS SHOWN IN THE BORINGS VARY. TO REDUCE EXCAVATION OF BEDROCK, TOP OF FOOTING ELEVATIONS WERE SET AND FOOTING THICKNESSES ARE EXPECTED TO VARY. IT IS LIKELY THAT FOOTING THICKNESSES GREATER THAN 5' WILL OCCUR. AT LOCATIONS WHERE FOOTING THICKNESSES ARE 3'-0" OR GREATER, CONTRACTOR SHALL PLACE A GRID OF #5@12" HORIZONTAL AND VERTICAL REINFORCING IN THE FACE OF THE FOOTING AS DIRECTED BY THE RESIDENT ENGINEER. PAYMENT FOR THESE ADDITIONAL #5 BARS SHALL BE PAID UNDER ITEM 900.608, "SPECIAL PROVISION (HIGH PERFORMANCE CONCRETE, MASS POUR)".
8. PLACE JOINT FILLER/CORK BETWEEN EXTERIOR BEAMS/CURBS AND ABUTMENT CHEEKWALLS AT ALL FOUR CORNERS OF BRIDGE. PAYMENT FOR JOINT FILLER/CORK SHALL BE PAID FOR UNDER ITEM 510.21.
9. DRAIN PIPES SHALL BE PLACED AT ALL LOW POINTS OF THE APPROACH SLAB SEATS IN THE CURTAIN WALLS AT EACH END OF THE BRIDGE.
10. FOR CAST -IN-PLACE FOOTINGS, CONTRACTOR MAY SUBMIT AN ALTERNATE CONCRETE MIX DESIGN WITH A HIGHER STRENGTH IF ALL OTHER PROVISIONS OF ITEM 900.608, SPECIAL PROVISION (HIGH PERFORMANCE CONCRETE, MASS POUR) ARE MET. ⚠
11. PRIOR TO BACKFILLING, GROUT IN GROUTED SPLICE COUPLERS SHALL ATTAIN A MINIMUM COMPRESSIVE STRENGTH OF 3500 PSI BASED ON MANUFACTURER'S RECOMMENDATIONS. PROVIDE APPROPRIATE CUBE MOLDS AS DESCRIBED IN AASHTO T106 FOR 3 SETS OF 3 DAY CUBES, 3 SETS OF 28 DAY CUBES, AND A MINIMUM OF 3 MORE CUBES TO TEST FOR THE 3500 PSI MINIMUM (PRIOR TO BACKFILLING) IN ACCORDANCE WITH SUBSECTION 540.11.
12. ABUTMENTS SHALL BE BACKFILLED TO 1'-6" BELOW TOP OF ABUTMENT BEAM SEATS PRIOR TO ERECTING BEAMS.

BRIDGE DECK:

1. CONCRETE FOR BRIDGE DECK OVERLAY AND CURTAIN WALLS SHALL BE PLACED IN ONE PLACEMENT STARTING AT THE ABUTMENT 1 CURTAIN WALL AND SHALL PROCEED CONTINUOUSLY TO THE ABUTMENT 2 CURTAIN WALL.
2. BRIDGE DECK OVERLAY SHALL HAVE A BROOM FINISH AND LONGITUDINAL DECK GROOVING.

REINFORCEMENT:

1. ALL REINFORCING STEEL SHALL BE DETAILED AND FABRICATED USING PROCEDURES AND TOLERANCES IN ACCORDANCE WITH APPLICABLE PUBLICATIONS OF THE "CONCRETE REINFORCING STEEL INSTITUTE".
2. ALL LEVEL I REINFORCING STEEL SHALL BE EPOXY COATED, EXCEPT FOR REINFORCEMENT IN FOOTINGS.
3. ALL MECHANICAL CONNECTORS IN ABUTMENTS AND WINGWALLS SHALL BE GROUTED SPLICE COUPLERS. ALL MECHANICAL CONNECTORS SHALL BE CAPABLE OF ATTAINING 125% OF THE SPECIFIED YIELD STRENGTH OF THE REINFORCING BAR BEING SPLICED. ADDITIONAL MECHANICAL CONNECTORS SHALL BE PROVIDED TO VTRANS FOR THE PURPOSE OF MATERIAL TESTING. STAINLESS STEEL REBAR CONNECTORS MAY BE USED WITH DUAL COATED REBAR. ⚠
4. GROUT PORTS FOR GROUTED SPLICE COUPLERS SHALL BE ON THE BACK FACE OF ELEMENTS (HIDDEN FROM VIEW) WHENEVER POSSIBLE.
5. GROUTED SPLICE COUPLERS SHALL HAVE A CLEAR COVER OF 3", EXCEPT CLEAR COVER SHALL BE 2" AT THE BACK OF ABUTMENT AND WINGWALL STEMS, UNLESS SPECIFIED OTHERWISE ON THE PLANS. CLEAR COVER SHALL BE DETAILED ON THE FABRICATION DRAWINGS. DIAMETER OF GROUTED SPLICE COUPLERS SHALL BE PER MANUFACTURER STANDARD. ⚠
6. GROUT FOR GROUTED SPLICE COUPLERS SHALL MEET THE REQUIREMENTS OF SUBSECTION 540.11. GROUT AND PLASTIC SHIMS, INCLUDING INSTALLATION, SHALL BE INCIDENTAL TO THE APPROPRIATE PRECAST UNIT PAID UNDER ITEM 540.10.
7. PRECAST FABRICATOR SHALL PROVIDE TEMPLATES OF ACTUAL GROUTED SPLICE COUPLER LOCATIONS IN THE ABUTMENTS AND WINGWALLS TO THE CONTRACTOR FOR THE PURPOSE OF PLACING FOOTING REINFORCEMENT TO MATCH.
8. ALL REINFORCMENT SHALL HAVE A CLEAR COVER OF 3" UNLESS SPECIFIED OTHERWISE ON THE PLANS.
9. DOWELS SHALL BE DRILLED AND GROUTED IN TO BED ROCK AS SHOWN ON THE PLANS OR AS ORDERED BY THE ENGINEER. THE DOWELS SHALL HAVE A 2'-0'' MINIMUM EMBEDMENT IN THE BED ROCK AND SHALL EXTEND IN THE FOOTING A MINIMUM OF 1'-6'', UNLESS NOTED OTHERWISE.

PRESTRESSED BOX BEAMS:

1. CONCRETE IN BOX BEAMS SHALL ATTAIN F'C = 8 KSI (MINIMUM) AT 28 DAYS.
2. PRESTRESS SHALL NOT BE TRANSFERRED TO THE CONCRETE UNTIL THE CONCRETE HAS ATTAINED A COMPRESSIVE STRENGTH, AS SHOWN BY CYLINDER TEST, OF AT LEAST F'CI = 6 KSI (MINIMUM RELEASE STRENGTH).
3. ALL PRETENSIONING STRANDS SHALL BE 0.6 INCH DIAMETER, UNCOATED, SEVEN-WIRE, LOW RELAXATION STEEL STRANDS AND SHALL CONFORM TO AASHTO M 203. THE TENSILE STRENGTH OF THE PRETENSIONING STRANDS SHALL BE 270 KSI AND THE INITIAL TENSION PER 0.6 INCH DIAMETER STRAND SHALL BE 44 KIPS.
4. ALL POST-TENSIONING STRANDS SHALL BE 0.6 INCH DIAMETER, SEVEN-WIRE, LOW RELAXATION STEEL STRANDS AND SHALL CONFORM TO AASHTO M 203. THE TENSILE STRENGTH OF THE POSTTENSIONING STRANDS SHALL BE 270 KSI AND THE TENSION PER 0.6 INCH DIA. STRAND SHALL BE 47 KIPS.
5. THE TOP OF ALL BOX BEAMS SHALL BE GIVEN A RAKE FINISH (1/4 INCH AMPLITUDE) TRANSVERSELY ACROSS THE WIDTH.
6. THE FABRICATOR IS FULLY RESPONSIBLE FOR THE DESIGN OF THE LIFTING DEVICES, WHICH SHALL BE ADEQUATE FOR THE SAFETY FACTORS REQUIRED BY THE ERECTION PROCEDURE.
7. PRECASTER SHALL SANDBLAST EACH SHEAR KEY FACE OF ALL BEAMS PRIOR TO DELIVERY TO THE BRIDGE LOCATION.
8. VOID DRAINS IN BOX BEAMS SHALL BE NONFERROUS ¾ INCH DIAMETER DRAIN MATERIAL. CONTRACTOR SHALL CLEAN ALL VOID DRAINS AFTER ERECTION.
9. ANCHOR RODS ARE INCLUDED IN ITEM 510.21, PRESTRESSED CONCRETE BOX BEAMS. ANCHOR RODS SHALL BE AASHTO M314/ASTM F1554 GRADE 55 AND SHALL BE ZINC COATED IN ACCORDANCE WITH SUBSECTION 714.06.
10. DUE TO THE LONG BEAM LENGTHS, FABRICATOR AND CONTRACTOR SHALL USE BEST PRECAST PRESTRESSED PRACTICES TO KEEP THE BOX BEAM CAMBERS AS CLOSE TO THOSE SHOWN IN THE PLANS AS PRACTICALLY POSSIBLE. ADDITIONALLY, AT ERECTION, THE MIDSPAN CAMBER FOR THE BOX BEAM WITH THE LEAST CAMBER SHALL BE WITHIN 1" OF THE MIDSPAN CAMBER FOR THE BOX BEAM WITH THE GREATEST CAMBER.
11. ITEM 510.24, "GROUTING SHEAR KEYS", APPLIES EXCLUSIVELY TO THE SHEAR KEYS IN THE PRESTRESSED BOX BEAMS.
12. ENDS OF BOX BEAMS SHALL BE VERTICAL PRIOR TO PLACEMENT OF CAST-IN-PLACE DECK AND CURTAIN WALLS.
13. AT LEAST 3 BUSINESS DAYS PRIOR TO DECK PLACEMENT, CONTRACTOR SHALL PROVIDE TO THE ENGINEER FOR APPROVAL ACTUAL TOP OF BEAM ELEVATIONS ALONG BEAM CENTERLINE AT CENTERLINE OF BEARINGS ABUT 1 & ABUT 2, AS WELL AS AT ¼, ½ AND ¾ SPAN LOCATIONS FOR EACH BEAM TO VERIFY ACTUAL DECK THICKNESSES.
14. VALUES FOR MIDSPAN CAMBER AT TRANSFER SHALL BE DETAILED ON THE FABRICATION DRAWINGS.

PRESTRESSED BOX BEAM INSTALLATION AND POST-TENSIONING:

1. INSTALL BEARINGS AT SPECIFIED BEAM SEAT ELEVATIONS.
2. VERIFY THAT ALL SHEAR KEY FASCIAS OF THE BOX BEAMS HAVE BEEN SANDBLASTED.
3. IMMEDIATELY PRIOR TO ERECTING THE BOX BEAMS, THE CONTRACTOR SHALL POWER WASH THE BOX BEAM FASCIAS WITH WATER TO REMOVE DUST AND OTHER DEBRIS.
4. PLACE BOX BEAMS TO FIT WITHIN THE WORKING LINES.
5. AS WORK PROGRESSES, INSTALL HARDWOOD WEDGES BETWEEN ADJACENT BEAMS TO MAINTAIN PROPER JOINT OPENING WITH A MINIMUM OF ONE WEDGE AT EACH LATERAL TIE.
6. PLACE AND GROUT ANCHOR RODS INTO ABUTMENTS. DO NOT GROUT ANCHOR RODS TO BOX BEAMS AT THIS TIME (SEE NOTE 16).
7. INSTALL OAKUM OR EQUIVALENT JOINT FILLER AT THE BOTTOM OF THE SHEAR KEYS AS SHOWN ON THE PLANS.
8. AFTER ALL BOX BEAMS HAVE BEEN ERECTED, INSTALL THE TRANSVERSE POST-TENSIONING TENDONS INTO THE DUCTS. EACH TRANSVERSE TENDON SHALL BE COVERED BY A SEAMLESS POLYPROPYLENE SHEATH (WITH CORROSION INHIBITER GREASE BETWEEN SHEATH AND STRAND) FOR THE LENGTH OF STRAND EXCEPT AT ANCHORAGE LOCATIONS.
9. VERIFY THAT HARDWOOD WEDGES ARE IN PLACE.
10. USING A CALIBRATED JACK, POST-TENSION TENDONS TO APPROXIMATELY 5 KIPS TO REMOVE SAG IN THE TIE AND TO SEAT THE CHUCK. DUE TO THE SIGNIFICANT SKEW, CONTRACTOR SHALL ENSURE THAT BEAMS ARE SUFFICIENTLY BRACED TO AVOID SLIPPAGE OF THE BEAMS, AS WELL AS TO AVOID APPLYING HORIZONTAL LOADS TO THE BEARINGS DURING POST-TENSIONING.
11. CLEAN EACH SHEAR KEY JOINT WITH AN OIL FREE AIR-BLAST IMMEDIATELY PRIOR TO GROUT PLACEMENT. VERIFY THAT THE JOINT FILLER (BACKER ROD) IS STILL IN PLACE.
12. GROUT FOR SHEAR KEYS SHALL BE A PREPACKAGED GROUT PRODUCT THAT PROVIDES HIGH BOND STRENGTH. PLACEMENT OF GROUT IN THE BOX BEAM SHEAR KEYS SHALL FOLLOW VTRANS SUBSECTION 510.13, AND SHALL BE PLACED MANUALLY. ADDITIONAL JOINT PREPARATION AND GROUT PLACEMENT SHALL FOLLOW THE GROUT MANUFACTURER'S RECOMMENDATIONS.
13. CAREFULLY ROD SHEAR KEY JOINTS TO ELIMINATE ANY POSSIBILITY OF VOIDS.
14. GROUT SHALL ATTAIN A MINIMUM COMPRESSIVE STRENGTH OF 1500 PSI AND SHALL HAVE CURED FOR A MINMUM OF 3 DAYS, BASED ON THE MANUFACTURER'S RECOMMENDATIONS, PRIOR TO STRESSING THE TRANSVERSE TENDONS.
15. USING A CALIBRATED JACK, POST-TENSION TENDONS TO 47 KIPS FOR EACH 0.6 INCH DIAMETER STRAND. (SEE CAUTION IN NOTE 10). BEGIN WITH THE TENDONS AT EACH END OF THE BRIDGE AND THEN WORK SYMMETRICALLY TOWARDS MIDSPAN FROM EACH END.
16. AFTER BRIDGE IS FULLY POST-TENSIONED FILL THE ANCHOR ROD SLEEVES AT EACH END OF BEAMS AS SHOWN IN THE PLANS.
17. CLEAN ALL BOX BEAM DRAINS.
18. REMOVE HARDWOOD WEDGES AND PATCH FASCIA BEAMS AT TRANSVERSE TIES WITH GROUT.
19. NO TRAFFIC OR HEAVY EQUIPMENT SHALL BE PERMITTED ON THE BRIDGE UNTIL ALL TRANSVERSE TIES HAVE BEEN PROPERLY AND FULLY TENSIONED.

CONSTRUCTION SEQUENCE:

1. THE PROJECT WILL REQUIRE CAREFUL PLANNING AND SEQUENCING TO PERFORM ALL CONSTRUCTION TASKS AND MEET ALL REQUIRED SAFETY PROVISIONS. THE CONTRACTOR IS DIRECTED TO THE SUGGESTED CONSTRUCTION SEQUENCE BELOW:
   A. MOBILIZE TO THE SITE AND INSTALL TRAFFIC CONTROL DEVICES AND TEMPORARY EPSC MEASURES.
   B. INITIATE TRAFFIC CONTROL PHASE 1 - SINGLE LANE ALTERNATING 1-WAY TRAFFIC DURING WORKING HOURS.
   C. COMPLETE BEDROCK/LEDGE REMOVAL OPERATIONS STA 504+50 RT TO STA 506+50 RT.
   D. NOTIFY UTILITY COMPANIES TO PERFORM PERMANENT UTILITY RELOCATIONS.
   E. INITIATE TRAFFIC CONTROL PHASE 2 - BRIDGE CLOSURE PERIOD.
   F. REMOVE AND REPLACE BRIDGE NO. 19.
   G. COMPLETE ASSOCIATED ROADWAY APPROACH WORK.
   H. END BRIDGE CLOSURE PERIOD.
   I. COMPLETE FINAL TREATMENTS AND ADDRESS PUNCHLIST ITEMS.
   J. DEMOBILIZE FROM SITE AND REMOVE ALL TRAFFIC CONTROL AND TEMPORARY EPSC MEASURES.

| CONCRETE: | | REINFORCING STEEL: | |
|---|---|---|---|
| STRUCTURAL ELEMENT | CONTRACT PAY ITEM | SHALL MEET THE REQUIREMENTS OF: | PAYMENT TO BE INCLUDED IN: |
| PRESTRESSED CONCRETE BOX BEAMS (F'C = 8000 PSI) | ITEM 510.21, "PRESTRESSED CONCRETE BOX BEAMS (45" X 48")" | REINFORCING STEEL, LEVEL II | ITEM 510.21, "PRESTRESSED CONCRETE BOX BEAMS (45" X 48" BEAMS)" |
| CAST-IN-PLACE CONCRETE OVERLAY, CURBS AND CURTAIN WALLS (F'C = 4000 PSI) | ITEM 501.33, "CONCRETE, HIGH PERFORMANCE CLASS A" * | REINFORCING STEEL, LEVEL II | ITEM 507.12, "REINFORCING STEEL, LEVEL II" |
| CAST-IN-PLACE CONCRETE CLOSURE POURS FOR PRECAST APPROACH SLABS (F'C = 5000 PSI) | ITEM 900.608, "SPECIAL PROVISION (HIGH PERFORMANCE CONCRETE, RAPID SET) (FPQ)" | REINFORCING STEEL, LEVEL II | ITEM 507.12, "REINFORCING STEEL, LEVEL II" |
| ABUTMENT AND WINGWALL STEMS (F'C = 5000 PSI) | ITEM 540.10, "PRECAST CONCRETE STRUCTURE (ABUTMENT #1)" OR "PRECAST CONCRETE STRUCTURE (ABUTMENT #2)" | REINFORCING STEEL, LEVEL I | ITEM 540.10, "PRECAST CONCRETE STRUCTURE (ABUTMENT #1)" OR "PRECAST CONCRETE STRUCTURE (ABUTMENT #2)" |
| FOOTINGS FOR ABUTMENTS, WINGWALLS, & RETAINING WALL (F'C = 3500 PSI) | ITEM 900.608, "SPECIAL PROVISION (HIGH PERFORMANCE CONCRETE, MASS POUR)" | REINFORCING STEEL, LEVEL I | ITEM 507.11, "REINFORCING STEEL, LEVEL I" ** |
| RETAINING WALL STEMS (F'C = 3500 PSI) | ITEM 501.34, "CONCRETE, HIGH PERFORMANCE CLASS B" | REINFORCING STEEL, LEVEL I | ITEM 507.11, "REINFORCING STEEL, LEVEL I" |
| APPROACH SLABS (F'C = 5000 PSI) | ITEM 540.10, "PRECAST CONCRETE STRUCTURE (APPROACH SLAB #1)" OR "PRECAST CONCRETE STRUCTURE (APPROACH SLAB #2)" | REINFORCING STEEL, LEVEL II | ITEM 540.10, "PRECAST CONCRETE STRUCTURE (APPROACH SLAB #1)" OR "PRECAST CONCRETE STRUCTURE (APPROACH SLAB #2)" |

* WITH SHRINKAGE REDUCING ADMIXTURE. MAXIMUM AGGREGATE SIZE SHALL BE 3/4".
** EXCEPT AS NOTED ABOVE IN SUBSTRUCTURES AND APPROACH SLABS NOTE 7

⚠ REVISED GENERAL NOTES - 1/22/2015

PARSONS BRINCKERHOFF
650 ELM STREET
MANCHESTER, NH 03101

PROJECT NAME: LINCOLN
PROJECT NUMBER: BRF 0188 (8)

FILE NAME: z10J066gennotes.dgn
PROJECT LEADER: K DONINGTON
DESIGNED BY: K JAMES
GENERAL NOTES

PLOT DATE: 8-DEC-2014
DRAWN BY: W GERHOLD
CHECKED BY: A STOCKIN
SHEET 5 OF 62

## GENERAL INFORMATION

### SYMBOLOGY LEGEND NOTE

THE SYMBOLOGY ON THIS SHEET IS INTENDED TO COVER STANDARD CONVENTIONAL SYMBOLOGY. THE SYMBOLOGY IS USED FOR EXISTING & PROPOSED FEATURES WITH HEAVIER LINEWEIGHT, IN COMBINATION WITH PROJECT ANNOTATION, AS NOTED ON PROJECT PLAN SHEETS. THIS LEGEND SHEET COVERS THE BASICS. SYMBOLOGY ON PLANS MAY VARY, PLAN ANNOTATIONS AND NOTES SHOULD BE USED TO CLARIFY AS NEEDED.

## R.O.W. ABBREVIATIONS (CODES) & SYMBOLS

| POINT | CODE | DESCRIPTION |
|---|---|---|
| | CH | CHANNEL EASEMENT |
| | CONST | CONSTRUCTION EASEMENT |
| | CUL | CULVERT EASEMENT |
| | D&C | DISCONNECT & CONNECT |
| | DIT | DITCH EASEMENT |
| | DR | DRAINAGE EASEMENT |
| | DRIVE | DRIVEWAY EASEMENT |
| | EC | EROSION CONTROL |
| | HWY | HIGHWAY EASEMENT |
| | I&M | INSTALL & MAINTAIN EASEMENT |
| | LAND | LANDSCAPE EASEMENT |
| | R&RES | REMOVE & RESET |
| | R&REP | REMOVE & REPLACE |
| | SR | SLOPE RIGHT |
| | UE | UTILITY EASEMENT |
| | (P) | PERMANENT EASEMENT |
| | (T) | TEMPORARY EASEMENT |
| ■ | BNDNS | BOUND SET |
| ⊡ | BNDNS | BOUND TO BE SET |
| ● | IPNS | IRON PIN SET |
| ◎ | IPNS | IRON PIN TO BE SET |
| ⊠ | CALC | EXISTING ROW POINT |
| ○ | PROW | PROPOSED ROW POINT |
| [LENGTH] | | LENGTH CARRIED ON NEXT SHEET |

## COMMON TOPOGRAPHIC POINT SYMBOLS

| POINT | CODE | DESCRIPTION |
|---|---|---|
| ⌗ | APL | BOUND APPARENT LOCATION |
| ▫ | BM | BENCH MARK |
| ⊡ | BND | BOUND |
| CB | CB | CATCH BASIN |
| ☼ | COMB | COMBINATION POLE |
| DITHR | DITHR | DROP INLET THROATED DNC |
| ☼ | EL | ELECTRIC POWER POLE |
| ⚐ | FPOLE | FLAGPOLE |
| ⊙ | GASFIL | GAS FILLER |
| ⊙ | GP | GUIDE POST |
| ⋇ | GSO | GAS SHUT OFF |
| ⟐ | GUY | GUY POLE |
| ⟐ | GUYW | GUY WIRE |
| ⋇ | GV | GATE VALUE |
| ❀ | H | TREE HARDWOOD |
| △ | HCTRL | CONTROL HORIZONTAL |
| ⚠ | HVCTRL | CONTROL HORIZ. & VERTICAL |
| ⛲ | HYD | HYDRANT |
| ⊗ | IP | IRON PIN |
| ⊗ | IPIPE | IRON PIPE |
| ☼ | LI | LIGHT - STREET OR YARD |
| MB | MB | MAILBOX |
| ○ | MH | MANHOLE (MH) |
| ⊡ | MM | MILE MARKER |
| ⌾ | PM | PARKING METER |
| ⊡ | PMK | PROJECT MARKER |
| ⟐ | POST | POST STONE/WOOD |
| RRSIG | RRSIG | RAILROAD SIGNAL |
| RRSL | RRSL | RAILROAD SWITCH LEVER |
| ❀ | S | TREE SOFTWOOD |
| ⌾ | SAT | SATELLITE DISH |
| ❀ | SHRUB | SHRUB |
| ⚲ | SIGN | SIGN |
| STUMP | STUMP | STUMP |
| TEL | TEL | TELEPHONE POLE |
| ⟐ | TIE | TIE |
| TSIGN | TSIGN | SIGN W/DOUBLE POST |
| VCTRL | VCTRL | CONTROL VERTICAL |
| ○ | WELL | WELL |
| ⋇ | WSO | WATER SHUT OFF |

THESE ARE COMMON VAOT SURVEY POINT SYMBOLS FOR EXISTING FEATURES, ALSO USED FOR PROPOSED FEATURES WITH HEAVIER LINEWEIGHT, IN COMBINATION WITH PROPOSED ANNOTATION.

## PROPOSED GEOMETRY CODES

| CODE | DESCRIPTION |
|---|---|
| PC | POINT OF CURVATURE |
| PI | POINT OF INTERSECTION |
| CC | CENTER OF CURVE |
| PT | POINT OF TANGENCY |
| PCC | POINT OF COMPOUND CURVE |
| PRC | POINT OF REVERSE CURVE |
| POB | POINT OF BEGINNING |
| POE | POINT OF ENDING |
| STA | STATION PREFIX |
| AH | AHEAD STATION SUFFIX |
| BK | BACK STATION SUFFIX |
| D | CURVE DEGREE OF (100FT) |
| R | CURVE RADUIS OF |
| T | CURVE TANGENT LENGTH |
| L | CURVE LENGTH OF |
| E | CURVE EXTERNAL DISTANCE |

## UTILITY SYMBOLOGY

### UNDERGROUND UTILITIES

- UT — TELEPHONE
- UE — ELECTRIC
- UTV — CABLE (TV)
- ELECTRIC+CABLE
- ELECTRIC+TELEPHONE
- CABLE+TELEPHONE
- ELECTRIC+CABLE+TELEP.
- G — GAS LINE
- W — WATER LINE
- S — SANITARY SEWER (SEPTIC)

### ABOVE GROUND UTILITIES (AERIAL)

- T — TELEPHONE
- E — ELECTRIC
- CABLE (TV)
- ELECTRIC+CABLE
- ELECTRIC+TELEPHONE
- AER E&T — ELECTRIC+TELEPHONE
- CABLE+TELEPHONE
- ELECTRIC+CABLE+TELEP.
- UTILITY POLE GUY WIRE

## PROJECT CONSTRUCTION SYMBOLOGY

### PROJECT DESIGN & LAYOUT SYMBOLOGY

- CZ — CLEAR ZONE
- PLAN LAYOUT MATCHLINE

### PROJECT CONSTRUCTION FEATURES

- TOP OF CUT SLOPE
- TOE OF FILL SLOPE
- STONE FILL
- BOTTOM OF DITCH ℄
- CULVERT PROPOSED
- STRUCTURE SUBSURFACE
- PDF — PDF — PROJECT DEMARCATION FENCE
- BARRIER FENCE
- TREE PROTECTION ZONE (TPZ)
- STRIPING LINE REMOVAL
- SHEET PILES

## CONVENTIONAL BOUNDARY SYMBOLOGY

### BOUNDARY LINES

- TOWN LINE — TOWN BOUNDARY LINE
- COUNTY LINE — COUNTY BOUNDARY LINE
- STATE LINE — STATE BOUNDARY LINE
- PROPOSED STATE R.O.W. (LIMITED ACCESS)
- PROPOSED STATE R.O.W.
- STATE ROW (LIMITED ACCESS)
- STATE ROW
- TOWN ROW
- PERMANENT EASEMENT LINE (P)
- TEMPORARY EASEMENT LINE (T)
- SURVEY LINE
- P/L — PROPERTY LINE (P/L)
- SR SR SR — SLOPE RIGHTS
- 6f — 6F PROPERTY BOUNDARY
- 4f — 4F PROPERTY BOUNDARY
- HAZ — HAZARDOUS WASTE

## EPSC LAYOUT PLAN SYMBOLOGY

### EPSC MEASURES

- FILTER CURTAIN
- SILT FENCE
- SILT FENCE WOVEN WIRE
- CHECK DAM
- DISTURBED AREAS REQUIRING RE-VEGETATION
- EROSION MATTING

### ENVIRONMENTAL RESOURCES

- WETLAND BOUNDARY
- RIPARIAN BUFFER ZONE
- WETLAND BUFFER ZONE
- SOIL TYPE BOUNDARY
- T&E — THREATENED & ENDANGERED SPECIES
- HAZ — HAZ — HAZARDOUS WASTE AREA
- AG — AGRICULTURAL LAND
- HABITAT — FISH & WILDLIFE HABITAT
- FLOOD PLAIN — FLOOD PLAIN
- OHW — ORDINARY HIGH WATER (OHW)
- STORM WATER
- USDA FOREST SERVICE LANDS
- WILDLIFE HABITAT SUIT/CONN

### ARCHEOLOGICAL & HISTORIC

- ARCH — ARCHEOLOGICAL BOUNDARY
- HISTORIC DIST — HISTORIC DISTRICT BOUNDARY
- HISTORIC — HISTORIC AREA
- Ⓗ HISTORIC STRUCTURE

## CONVENTIONAL TOPOGRAPHIC SYMBOLOGY

### EXISTING FEATURES

- ROAD EDGE PAVEMENT
- ROAD EDGE GRAVEL
- DRIVEWAY EDGE
- DITCH
- FOUNDATION
- FENCE (EXISTING)
- FENCE WOOD POST
- FENCE STEEL POST
- GARDEN
- ROAD GUARDRAIL
- RAILROAD TRACKS
- CULVERT (EXISTING)
- STONE WALL
- WALL
- WOOD LINE
- BRUSH LINE
- HEDGE
- BODY OF WATER EDGE
- LEDGE EXPOSED

PARSONS BRINCKERHOFF
650 ELM STREET
MANCHESTER, NH 03101

PROJECT NAME: LINCOLN
PROJECT NUMBER: BRF 0188 (8)

FILE NAME: z|2b148|gnd.dgn
PROJECT LEADER: G.K. DONINGTON
DESIGNED BY: S.BROWN
LEGEND SHEET

PLOT DATE: 8-DEC-2014
DRAWN BY: S.BROWN
CHECKED BY: A.STOCKIN
SHEET 6 OF 62

STATE OF VERMONT
AGENCY OF TRANSPORTATION

# QUANTITY SHEET 1

## SUMMARY OF ESTIMATED QUANTITIES

| ROADWAY | LANDSCAPING | EROSION CONTROL | BRIDGE | FULL C.E. ITEMS | TOTALS GRAND TOTAL | TOTALS FINAL | UNIT | DESCRIPTIONS ITEMS | ITEM NUMBER | ROUND |
|---|---|---|---|---|---|---|---|---|---|---|
| 0.18 | | | | | 0.18 | | ACRE | CLEARING AND GRUBBING, INCLUDING INDIVIDUAL TREES AND STUMPS | 201.11 | |
| 2650 | | | | | 2650 | | CY | COMMON EXCAVATION | 203.15 | |
| 465 | | | | | 465 | | CY | SOLID ROCK EXCAVATION | 203.16 | |
| 465 | | | 280 | | 745 | | CY | UNCLASSIFIED CHANNEL EXCAVATION | 203.27 | |
| 13 | | | | | 13 | | CY | EARTH BORROW | 203.30 | |
| 860 | | | | | 860 | | CY | SAND BORROW | 203.31 | |
| 10 | | | | | 10 | | CY | TRENCH EXCAVATION OF EARTH, EXPLORATORY (N.A.B.I.) | 204.22 | |
| | | | 740 | | 740 | | CY | STRUCTURE EXCAVATION | 204.25 | |
| | | | 400 | | 400 | | CY | GRANULAR BACKFILL FOR STRUCTURES | 204.30 | |
| 300 | | | | | 300 | | SY | DRILLING AND BLASTING OF SOLID ROCK SUBGRADE | 205.20 | ⚠ |
| 61 | | | | | 61 | | SY | COLD PLANING, BITUMINOUS PAVEMENT | 210.10 | |
| 1150 | | | | | 1150 | | CY | SUBBASE OF DENSE GRADED CRUSHED STONE | 301.35 | |
| 5.4 | | | | | 5.4 | | CWT | EMULSIFIED ASPHALT | 404.65 | |
| 1 | | | | | 1 | | LU | PRICE ADJUSTMENT, ASPHALT CEMENT (N.A.B.I.) | 406.50 | |
| | | | 140 | | 140 | | CY | CONCRETE, HIGH PERFORMANCE CLASS A | 501.33 | |
| | | | 22 | | 22 | | CY | CONCRETE, HIGH PERFORMANCE CLASS B | 501.34 | |
| | | | 18350 | | 18350 | | LB | REINFORCING STEEL, LEVEL I | 507.11 | |
| | | | 14390 | | 14390 | | LB | REINFORCING STEEL, LEVEL II | 507.12 | |
| | | | 184 | | 184 | | LF | DRILLING AND GROUTING DOWELS | 507.16 | |
| | | | 141 | | 141 | | EACH | MECHANICAL BAR CONNECTOR | 507.19 | |
| | | | 392 | | 392 | | SY | LONGITUDINAL DECK GROOVING | 509.10 | |
| | | | 994 | | 994 | | LF | PRESTRESSED CONCRETE BOX BEAMS (45" X 48") | 510.21 | |
| | | | 870 | | 870 | | LF | GROUTING SHEAR KEYS | 510.24 | |
| | | | 12 | | 12 | | GAL | WATER REPELLENT, SILANE | 514.10 | |
| | | | 80 | | 80 | | LF | BRIDGE EXPANSION JOINT, ASPHALTIC PLUG | 516.10 | |
| | | | 80 | | 80 | | LF | JOINT SEALER, HOT POURED | 524.11 | |
| | | | 262 | | 262 | | LF | BRIDGE RAILING, GALVANIZED 4 RAIL BOX BEAM | 525.34 | |
| | | | 1 | | 1 | | EACH | REMOVAL OF STRUCTURE (3,200 SF - EST) | 529.15 | |
| | | | 32 | | 32 | | EACH | BEARING DEVICE ASSEMBLY, STEEL REINFORCED ELASTOMERIC PAD | 531.17 | |
| | | | 1 | | 1 | | LS | PRECAST CONCRETE STRUCTURE (ABUTMENT #1) | 540.10 | |
| | | | 1 | | 1 | | LS | PRECAST CONCRETE STRUCTURE (ABUTMENT #2) | 540.10 | |
| | | | 1 | | 1 | | LS | PRECAST CONCRETE STRUCTURE (APPROACH SLAB #1) | 540.10 | |
| | | | 1 | | 1 | | LS | PRECAST CONCRETE STRUCTURE (APPROACH SLAB #2) | 540.10 | |
| 82 | | | | | 82 | | LF | 12" CSP .064 (2-2/3 X 1/2) | 601.0005 | |
| 40 | | | | | 40 | | LF | 18" RCP CLASS IV | 601.0816 | |
| 30 | | | | | 30 | | LF | 18" CPEP | 601.0915 | |
| 2 | | | | | 2 | | EACH | PRECAST REINFORCED CONCRETE DROP INLET WITH CAST IRON GRATE | 604.18 | |
| 15 | | | | | 15 | | CY | STONE FILL, TYPE II | 613.11 | |
| | | | 440 | | 440 | | CY | STONE FILL, TYPE IV | 613.13 | |
| 150 | | | | | 150 | | LF | PRECAST REINFORCED CONCRETE CURB, TYPE B | 616.26 | |

## DETAILED SUMMARY OF QUANTITIES

| QUANTITIES | UNIT | ITEMS |
|---|---|---|
| | | **EARTHWORK SUMMARY** |
| 2650 | CY | COMMON EXCAVATION (2649 x 1.0) |
| 210 | CY | UNCLASSIFIED CHANNEL EXCAVATION (280 x 0.75) |
| 555 | CY | STRUCTURE EXCAVATION (740 x 0.75) |
| 3415 | CY | SUBTOTAL |
| 85 | CY | ROUNDING |
| 3500 | CY | TOTAL FILL AVAILABLE |
| 13 | CY | TOTAL FILL REQUIRED |
| 3487 | CY | TOTAL WASTE |
| | | **SPECIAL PROVISION (BITUMINOUS CONCRETE PAVEMENT, SMALL QUANTITY)** |
| 268 | TON | TYPE IIS |
| 367 | TON | TYPE IVS |
| 635 | TON | TOTAL SUPERPAVE |

⚠ REVISED QUANTITY SHEETS TO ADD ITEM 205.20 - 1/22/2015

PROJECT NAME: LINCOLN
PROJECT NUMBER: BRF 0188 (8)

FILE NAME: z10J066qs.dgn
PROJECT LEADER: G.K.DONINGTON
DESIGNED BY: A.STOCKIN
QUANTITY SHEET (I)

PLOT DATE: 8-DEC-2014
DRAWN BY: S.BROWN
CHECKED BY: A.STOCKIN
SHEET 7 OF 62

STATE OF VERMONT
AGENCY OF TRANSPORTATION

# QUANTITY SHEET 2

| SUMMARY OF ESTIMATED QUANTITIES | | | | | | | | | | TOTALS | | DESCRIPTIONS | | | | DETAILED SUMMARY OF QUANTITIES | | |
|---|---|---|---|---|---|---|---|---|---|---|---|---|---|---|---|---|---|---|
| | | | | | | ROADWAY | LANDSCAPING | EROSION CONTROL | BRIDGE | FULL C.E. ITEMS | GRAND TOTAL | FINAL | UNIT | ITEMS | ITEM NUMBER | ROUND | QUANTITIES | UNIT | ITEMS |
| | | | | | | 5 | | | | | 5 | | EACH | STEEL MARKER POSTS | 619.16 | | | | |
| | | | | | | | | 520 | | | 520 | | LF | WOVEN WIRE FENCE WITH WOOD POSTS | 620.26 | | | | |
| | | | | | | 283 | | | | | 283 | | LF | STEEL BEAM GUARDRAIL, GALVANIZED | 621.20 | | | | |
| | | | | | | 2 | | | | | 2 | | EACH | MANUFACTURED TERMINAL SECTION, TANGENT | 621.51 | | | | |
| | | | | | | 4 | | | | | 4 | | EACH | GUARDRAIL APPROACH SECTION, GALVANIZED 4 RAIL BOX BEAM | 621.73 | | | | |
| | | | | | | 230 | | | | | 230 | | LF | REMOVAL AND DISPOSAL OF GUARDRAIL | 621.80 | | | | |
| | | | | | | 733 | | | | | 733 | | LF | TEMPORARY TRAFFIC BARRIER | 621.90 | | | | |
| | | | | | | 160 | | | | | 160 | | HR | UNIFORMED TRAFFIC OFFICERS | 630.10 | | | | |
| | | | | | | 480 | | | | | 480 | | HR | FLAGGERS | 630.15 | | | | |
| | | | | | | | | | | 1 | 1 | | LS | FIELD OFFICE, ENGINEERS | 631.10 | | | | |
| | | | | | | | | | | 1 | 1 | | LS | TESTING EQUIPMENT, CONCRETE | 631.16 | | | | |
| | | | | | | | | | | 1 | 1 | | LS | TESTING EQUIPMENT, BITUMINOUS | 631.17 | | | | |
| | | | | | | | | | | 3000 | 3000 | | DL | FIELD OFFICE TELEPHONE (N.A.B.I.) | 631.26 | | | | |
| | | | | | | 1 | | | | | 1 | | LS | MOBILIZATION/DEMOBILIZATION | 635.11 | | | | |
| | | | | | | 1 | | | | | 1 | | LS | TRAFFIC CONTROL | 641.10 | | | | |
| | | | | | | 2 | | | | | 2 | | EACH | PORTABLE CHANGEABLE MESSAGE SIGN | 641.15 | | | | |
| | | | | | | 1400 | | | | | 1400 | | LF | 4 INCH WHITE LINE | 646.20 | | | | |
| | | | | | | 1400 | | | | | 1400 | | LF | 4 INCH YELLOW LINE | 646.21 | | | | |
| | | | | | | | | | 330 | | 330 | | SY | GEOTEXTILE UNDER STONE FILL | 649.31 | | | | |
| | | | | | | | | 175 | | | 175 | | SY | GEOTEXTILE FOR SILT FENCE | 649.51 | | | | |
| | | | | | | | | 200 | | | 200 | | SY | GEOTEXTILE FOR FILTER CURTAIN | 649.61 | | | | |
| | | | | | | | 4 | | | | 4 | | LB | SEED | 651.15 | | | | |
| | | | | | | | 126 | | | | 126 | | LB | FERTILIZER | 651.18 | | | | |
| | | | | | | | 0.1 | | | | 0.1 | | TON | AGRICULTURAL LIMESTONE | 651.20 | | | | |
| | | | | | | | 1.6 | | | | 1.6 | | TON | HAY MULCH | 651.25 | | | | |
| | | | | | | | 210 | | | | 210 | | CY | TOPSOIL | 651.35 | | | | |
| | | | | | | | 240 | | | | 240 | | SY | GRUBBING MATERIAL | 651.40 | | | | |
| | | | | | | | | 1 | | | 1 | | LS | EPSC PLAN | 652.10 | | | | |
| | | | | | | | | 40 | | | 40 | | HR | MONITORING EPSC PLAN | 652.20 | | | | |
| | | | | | | | | 1 | | | 1 | | LU | MAINTENANCE OF EPSC PLAN (N.A.B.I.) | 652.30 | | | | |
| | | | | | | | | 1040 | | | 1040 | | SY | TEMPORARY EROSION MATTING | 653.20 | | | | |
| | | | | | | | | 1040 | | | 1040 | | SY | PERMANENT EROSION MATTING | 653.21 | | | | |
| | | | | | | | | 55 | | | 55 | | CY | VEHICLE TRACKING PAD | 653.35 | | | | |
| | | | | | | | | 1 | | | 1 | | EACH | INLET PROTECTION DEVICE, TYPE I | 653.40 | | | | |
| | | | | | | | | 1230 | | | 1230 | | LF | PROJECT DEMARCATION FENCE | 653.55 | | | | |
| | | | | | | 1 | | | | | 1 | | LU | PRICE ADJUSTMENT, FUEL (N.A.B.I.) | 690.50 | | | | |
| | | | | | | | | | 330 | | 330 | | CY | SPECIAL PROVISION (HIGH PERFORMANCE CONCRETE, MASS POUR) | 900.608 | | | | |
| | | | | | | | | | 7 | | 7 | | CY | SPECIAL PROVISION (HIGH PERFORMANCE CONCRETE, RAPID SET)(FPQ) | 900.608 | | | | |
| | | | | | | | | | 1 | | 1 | | LS | SPECIAL PROVISION (CPM SCHEDULE) | 900.645 | | | | |
| | | | | | | | | | 1 | | 1 | | LU | SPECIAL PROVISION (INCENTIVE/DISINCENTIVE)(N.A.B.I) | 900.650 | | | | |
| | | | | | | 1 | | | | | 1 | | LU | SPECIAL PROVISION (MAT DENSITY PAY ADJUSTMENT, SMALL QUANTITY)(N.A.B.I.) | 900.650 | | | | |
| | | | | | | 1 | | | | | 1 | | LU | SPECIAL PROVISION (MIXTURE PAY ADJUSTMENT)(N.A.B.I.) | 900.650 | | | | |
| | | | | | | 640 | | | | | 640 | | TON | SPECIAL PROVISION (BITUMINOUS CONCRETE PAVEMENT, SMALL QUANTITY) | 900.680 | | | | |

⚠ REVISED QUANTITY SHEETS TO ADD ITEM 205.20 - 1/22/2015

PARSONS BRINCKERHOFF
650 ELM STREET
MANCHESTER, NH 03101

PROJECT NAME: LINCOLN
PROJECT NUMBER: BRF 0188 (8)

FILE NAME: z10J066qs.dgn
PROJECT LEADER: G.K.DONINGTON
DESIGNED BY: A.STOCKIN
QUANTITY SHEET (2)

PLOT DATE: 8-DEC-2014
DRAWN BY: S.BROWN
CHECKED BY: A.STOCKIN
SHEET 8 OF 62

## GPS CONTROL POINTS

## TRAVERSE TIES

### HVCTRL #1

NORTH = 583749.4440
EAST = 1511690.9930
ELEV. = 1002.2110

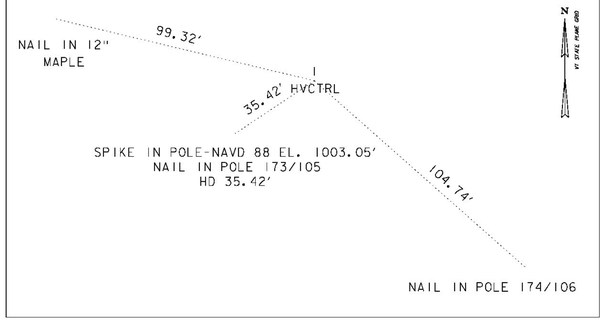


### HVCTRL #2

NORTH = 584074.3870
EAST = 1511404.6670
ELEV. = 998.5400

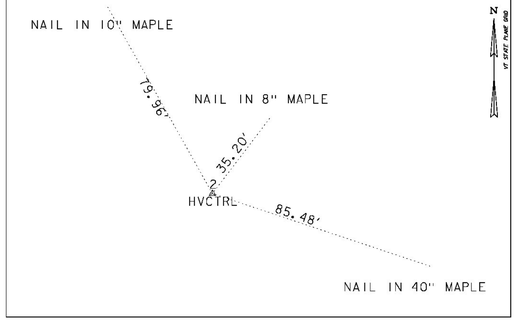


### HVCTRL #3

NORTH = 583872.5576
EAST = 1511506.9502
ELEV. = 999.5065

NOT TIED

### HVCTRL #10

NORTH = 583980.3352
EAST = 1511448.8685
ELEV. = 981.4478

NOT TIED

### HVCTRL #11

NORTH = 583860.8023
EAST = 1511595.6667
ELEV. = 984.6571

NOT TIED

## ALIGNMENT TIES

### POB 499+86.06

NORTH = 584195.1928
EAST = 1511243.2616

NOT TIED

### PC 501+68.00

NORTH = 584099.4828
EAST = 1511397.9920

NOT TIED

### PT 503+04.33

NORTH = 583999.5055
EAST = 1511487.9719

NOT TIED

### PC 504+61.05

NORTH = 583858.3103
EAST = 1511555.9669

NOT TIED

### PT 506+20.81

NORTH = 583746.9985
EAST = 1511666.4435

NOT TIED

### POE 508+00.00

NORTH = 583668.0389
EAST = 1511827.2964

NOT TIED

DATUM
VERTICAL SEE TITLE SHEET
HORIZONTAL SEE TITLE SHEET
ADJUSTMENT NONE

PROJECT NAME: LINCOLN
PROJECT NUMBER: BRF 0188 (8)

PARSONS BRINCKERHOFF
650 ELM STREET
MANCHESTER, NH 03101

FILE NAME: z10J066t1.dgn
PROJECT LEADER: C.K. DONINGTON
DESIGNED BY: C CARNEY
SURVEY TIE SHEET
PLOT DATE: 8-DEC-2014
DRAWN BY: C CARNEY
CHECKED BY: R BENJAMIN
SHEET 9 OF 62

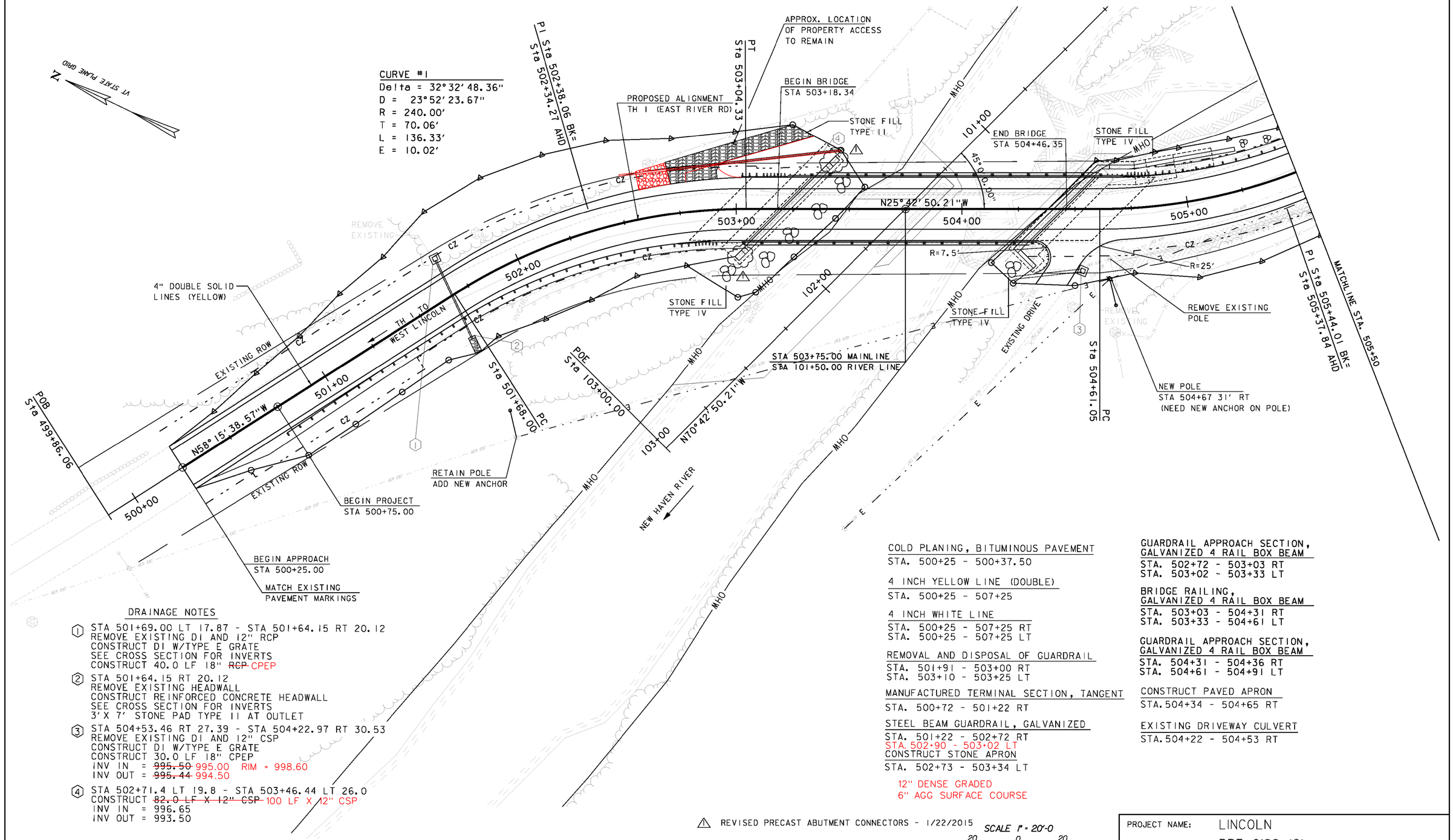


DRAINAGE NOTES

(1) STA 501+69.00 LT 17.87 - STA 501+64.15 RT 20.12
REMOVE EXISTING DI AND 12" RCP
CONSTRUCT DI W/TYPE E GRATE
SEE CROSS SECTION FOR INVERTS
CONSTRUCT 40.0 LF 18" ~~RCP~~ CPEP

(2) STA 501+64.15 RT 20.12
REMOVE EXISTING HEADWALL
CONSTRUCT REINFORCED CONCRETE HEADWALL
SEE CROSS SECTION FOR INVERTS
3'X 7' STONE PAD TYPE II AT OUTLET

(3) STA 504+53.46 RT 27.39 - STA 504+22.97 RT 30.53
REMOVE EXISTING DI AND 12" CSP
CONSTRUCT DI W/TYPE E GRATE
CONSTRUCT 30.0 LF 18" CPEP
INV IN = ~~995.50~~ 995.00 RIM = 998.60
INV OUT = ~~995.44~~ 994.50

(4) STA 502+71.4 LT 19.8 - STA 503+46.44 LT 26.0
CONSTRUCT ~~82.0 LF X 12" CSP~~ 100 LF X 12" CSP
INV IN = 996.65
INV OUT = 993.50

COLD PLANING, BITUMINOUS PAVEMENT
STA. 500+25 - 500+37.50

4 INCH YELLOW LINE (DOUBLE)
STA. 500+25 - 507+25

4 INCH WHITE LINE
STA. 500+25 - 507+25 RT
STA. 500+25 - 507+25 LT

REMOVAL AND DISPOSAL OF GUARDRAIL
STA. 501+91 - 503+00 RT
STA. 503+10 - 503+25 LT

MANUFACTURED TERMINAL SECTION, TANGENT
STA. 500+72 - 501+22 RT

STEEL BEAM GUARDRAIL, GALVANIZED
STA. 501+22 - 502+72 RT
STA. 502+90 - 503+02 LT

CONSTRUCT STONE APRON
STA. 502+73 - 503+34 LT
12" DENSE GRADED
6" AGG SURFACE COURSE

GUARDRAIL APPROACH SECTION,
GALVANIZED 4 RAIL BOX BEAM
STA. 502+72 - 503+03 RT
STA. 503+02 - 503+33 LT

BRIDGE RAILING,
GALVANIZED 4 RAIL BOX BEAM
STA. 503+03 - 504+31 RT
STA. 503+33 - 504+61 LT

GUARDRAIL APPROACH SECTION,
GALVANIZED 4 RAIL BOX BEAM
STA. 504+31 - 504+36 RT
STA. 504+61 - 504+91 LT

CONSTRUCT PAVED APRON
STA. 504+34 - 504+65 RT

EXISTING DRIVEWAY CULVERT
STA. 504+22 - 504+53 RT

⚠ REVISED PRECAST ABUTMENT CONNECTORS - 1/22/2015

SCALE 1" = 20'-0
20 0 20

PARSONS BRINCKERHOFF
650 ELM STREET
MANCHESTER, NH 03101

PROJECT NAME: LINCOLN
PROJECT NUMBER: BRF 0188 (8)

FILE NAME: z10j066bdr.dgn
PROJECT LEADER: G.K. DONINGTON
DESIGNED BY: C. CARNEY
LAYOUT SHEET (1)
PLOT DATE: 8-DEC-2014
DRAWN BY: C. CARNEY
CHECKED BY: R. BENJAMIN
SHEET 10 OF 62

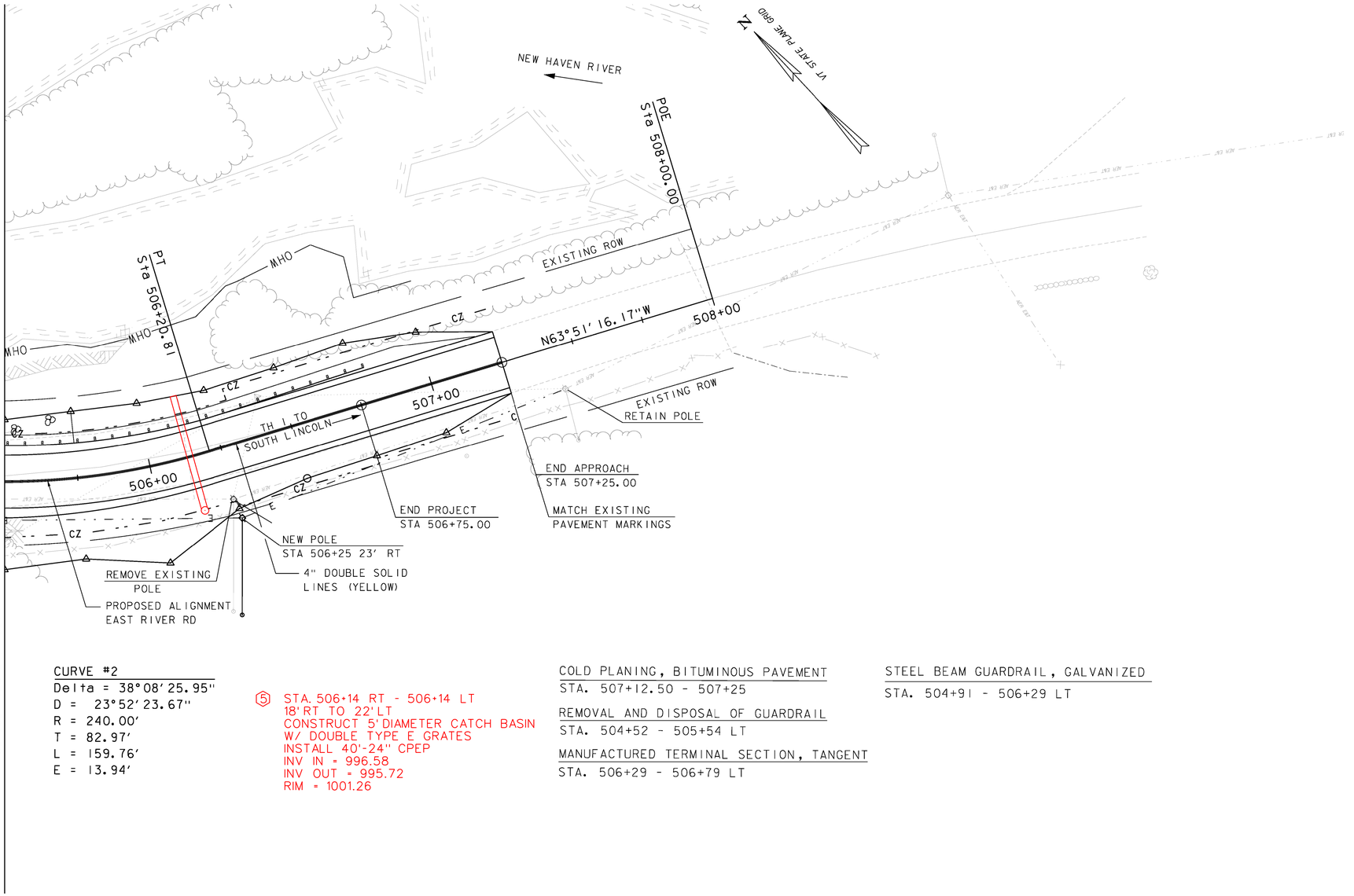


CURVE #2
Delta = 38°08'25.95"
D = 23°52'23.67"
R = 240.00'
T = 82.97'
L = 159.76'
E = 13.94'

(5) STA. 506+14 RT - 506+14 LT
18' RT TO 22' LT
CONSTRUCT 5' DIAMETER CATCH BASIN
W/ DOUBLE TYPE E GRATES
INSTALL 40'-24" CPEP
INV IN = 996.58
INV OUT = 995.72
RIM = 1001.26

COLD PLANING, BITUMINOUS PAVEMENT
STA. 507+12.50 - 507+25

REMOVAL AND DISPOSAL OF GUARDRAIL
STA. 504+52 - 505+54 LT

MANUFACTURED TERMINAL SECTION, TANGENT
STA. 506+29 - 506+79 LT

STEEL BEAM GUARDRAIL, GALVANIZED
STA. 504+91 - 506+29 LT

SCALE 1" = 20'-0
20 0 20

PARSONS BRINCKERHOFF
650 ELM STREET
MANCHESTER, NH 03101

PROJECT NAME: LINCOLN
PROJECT NUMBER: BRF 0188 (8)

FILE NAME: z10J066bdr.dgn
PROJECT LEADER: G.K. DONINGTON
DESIGNED BY: C. CARNEY
LAYOUT SHEET (2)

PLOT DATE: 8-DEC-2014
DRAWN BY: C. CARNEY
CHECKED BY: R. BENJAMIN
SHEET 11 OF 62

## *PROFILE ALONG CENTERLINE TH 1*

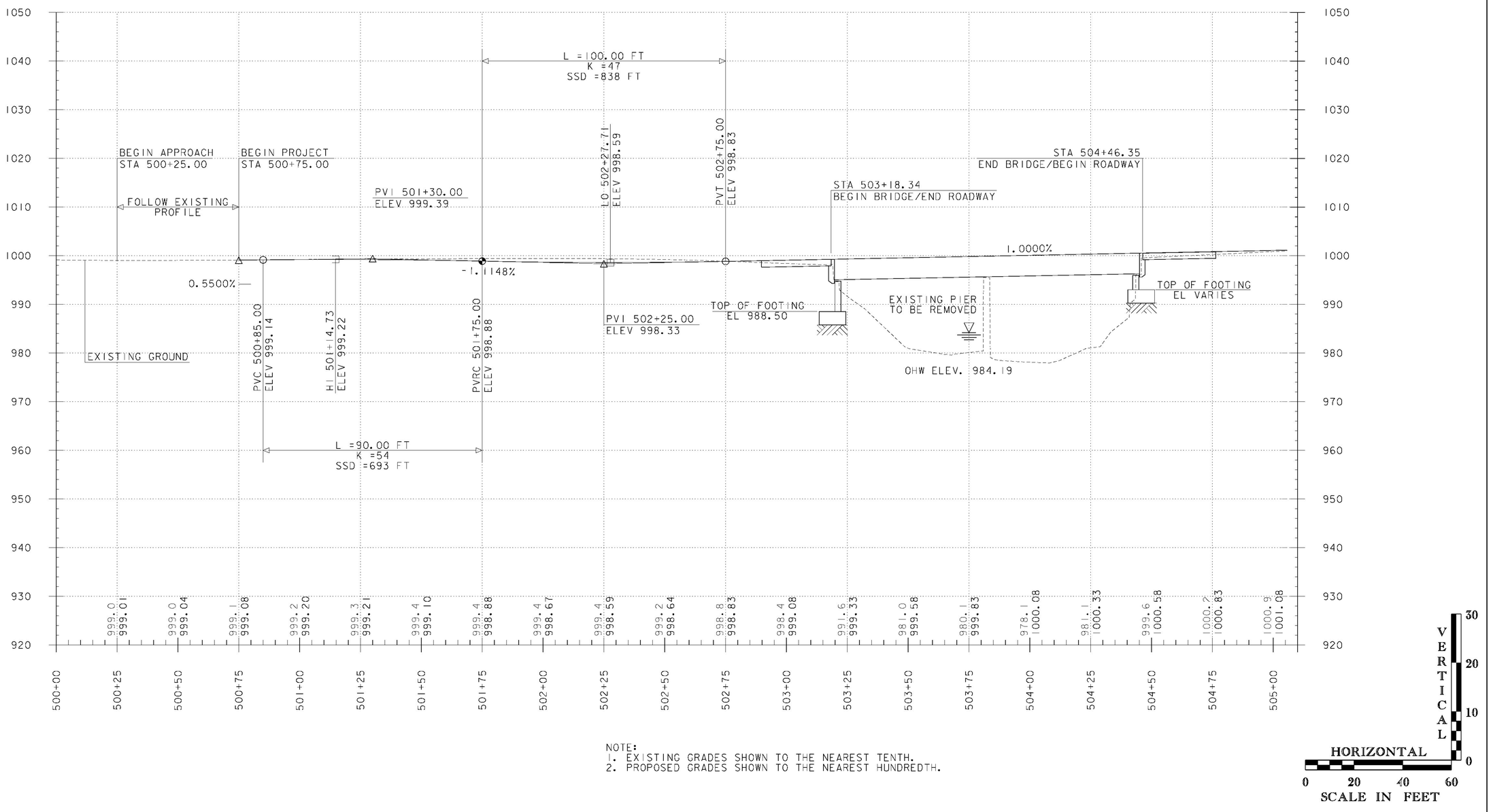


NOTE:
1. EXISTING GRADES SHOWN TO THE NEAREST TENTH.
2. PROPOSED GRADES SHOWN TO THE NEAREST HUNDREDTH.


PARSONS BRINCKERHOFF
650 ELM STREET
MANCHESTER, NH 03101


PROJECT NAME: LINCOLN
PROJECT NUMBER: BFR 0188 (8)

FILE NAME: z10j066pro.dgn
PROJECT LEADER: G.K. DONINGTON
DESIGNED BY: C CARNEY
PROFILE SHEET (1)

PLOT DATE: 8-DEC-2014
DRAWN BY: C CARNEY
CHECKED BY: R BENJAMIN
SHEET 12 OF 62

# PROFILE ALONG CENTERLINE TH 1

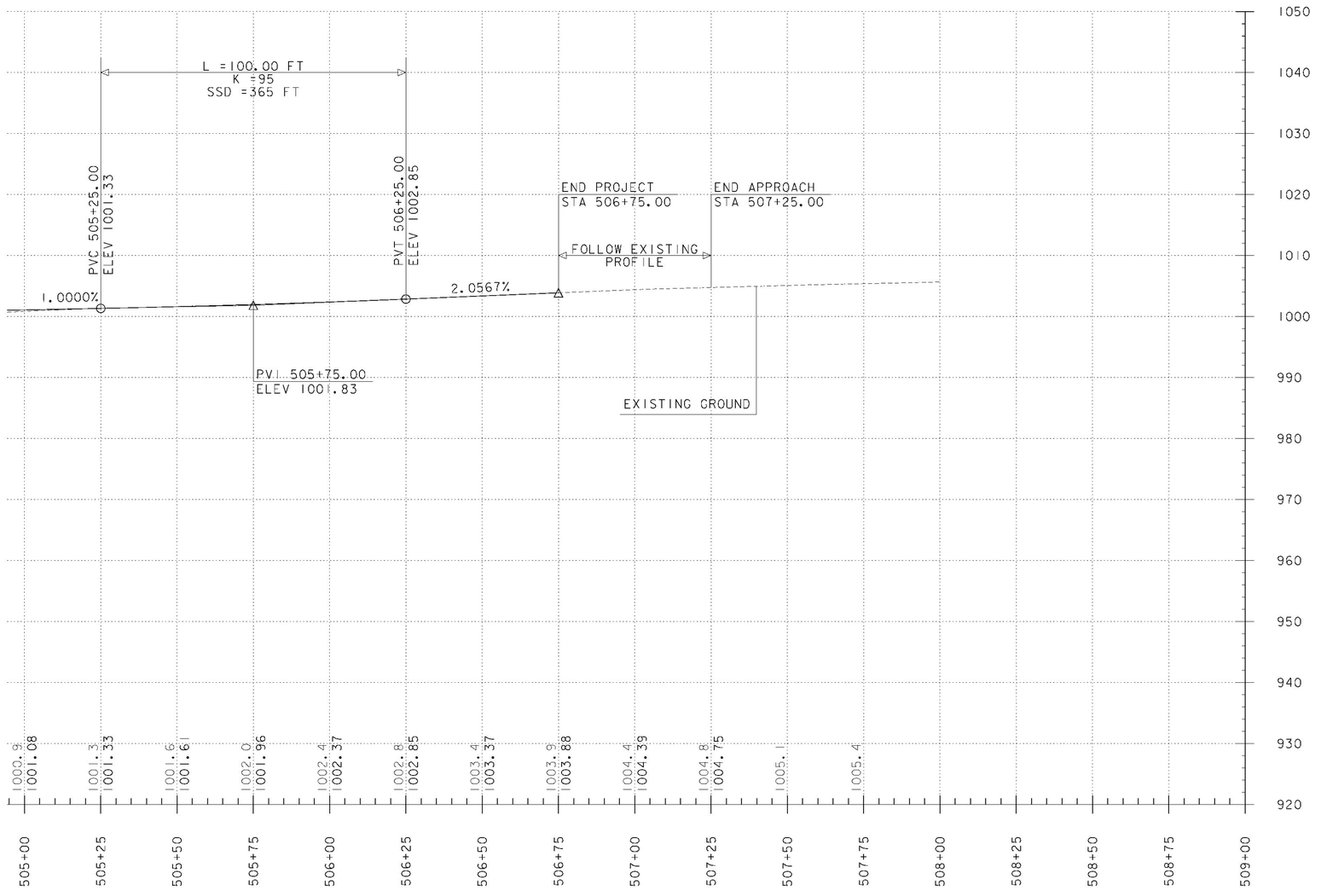


NOTE:
1. EXISTING GRADES SHOWN TO THE NEAREST TENTH.
2. PROPOSED GRADES SHOWN TO THE NEAREST HUNDREDTH.


PARSONS BRINCKERHOFF
650 ELM STREET
MANCHESTER, NH 03101


PROJECT NAME: LINCOLN
PROJECT NUMBER: BRF 0188 (8)

FILE NAME: z10j066pro.dgn
PROJECT LEADER: G.K. DONINGTON
DESIGNED BY: C CARNEY
PROFILE SHEET (2)

PLOT DATE: 8-DEC-2014
DRAWN BY: C CARNEY
CHECKED BY: R BENJAMIN
SHEET 13 OF 62

TRAFFIC CONTROL PHASE 1

1. INSTALL TEMPORARY TRAFFIC SIGNS AND BARRELS AS SHOWN.

2. INITIATE AND MAINTAIN SINGLE LANE ALTERNATING ONE-WAY TRAFFIC THROUGHOUT DURATION OF PHASE 1.

3. REMOVE EXISTING POLE AT STA 504+65 RT 21' AND UTILIZE BLASTING AS NECESSARY TO PLACE NEW POLE.

4. FOLLOW MUTCD AND VTRANS STANDARDS WHEN BLASTING.

5. INSTALLATION OF TEMPORARY TRAFFIC SIGNS AND BARRELS, AND REMOVAL OF EXISTING POLE SHALL BE PAID FOR UNDER ITEM 641.10 TRAFFIC CONTROL.

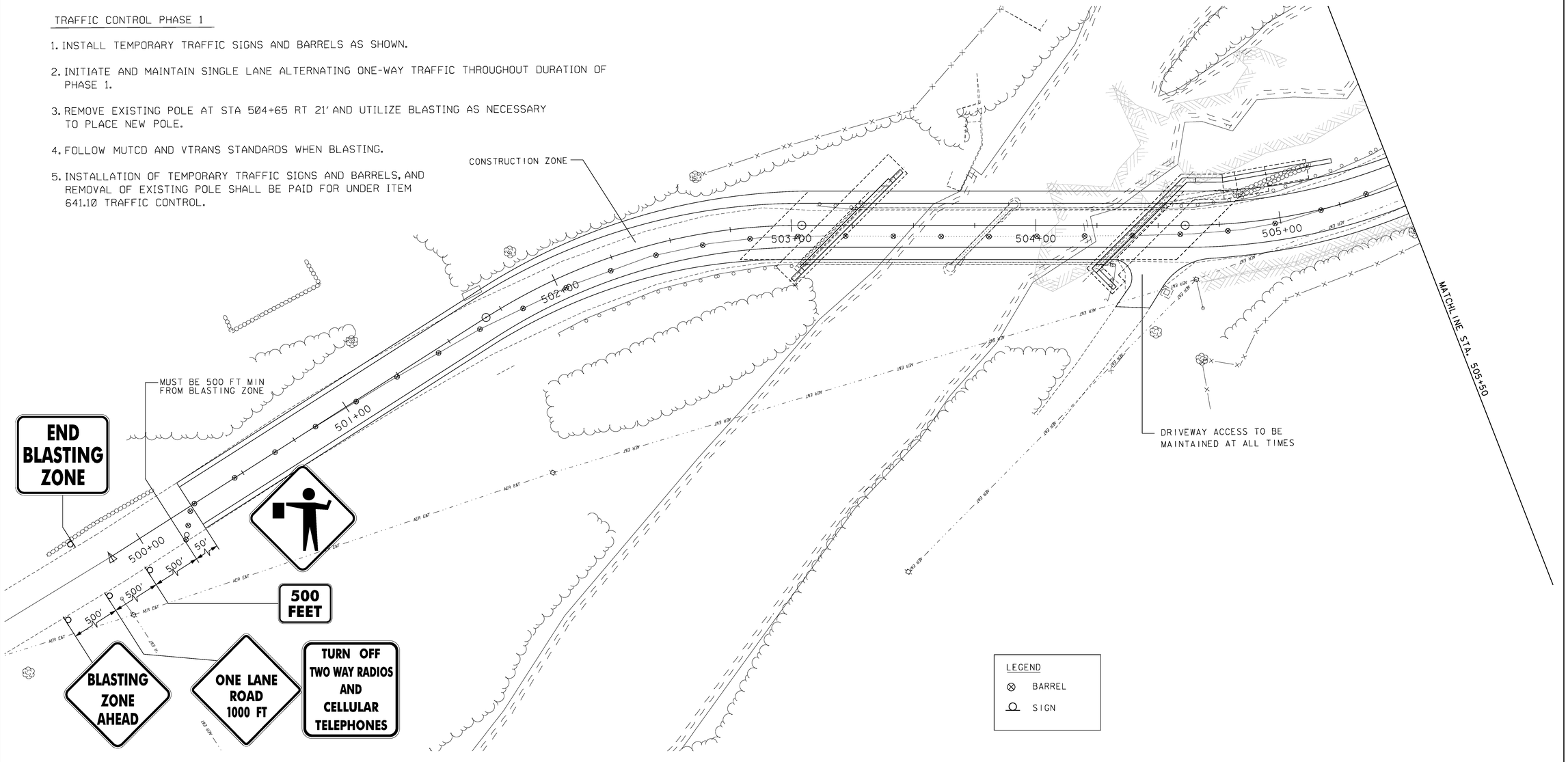


PARSONS BRINCKERHOFF
650 ELM STREET
MANCHESTER, NH 03101

PROJECT NAME: LINCOLN
PROJECT NUMBER: BRF 0188 (8)

FILE NAME: z10j066tcs_2d.dgn
PROJECT LEADER: G.K. DONINGTON
DESIGNED BY: J. KHERA
TRAFFIC CONTROL PHASE I SHEET I

PLOT DATE: 8-DEC-2014
DRAWN BY: J. KHERA
CHECKED BY: R BENJAMIN
SHEET 14 OF 62

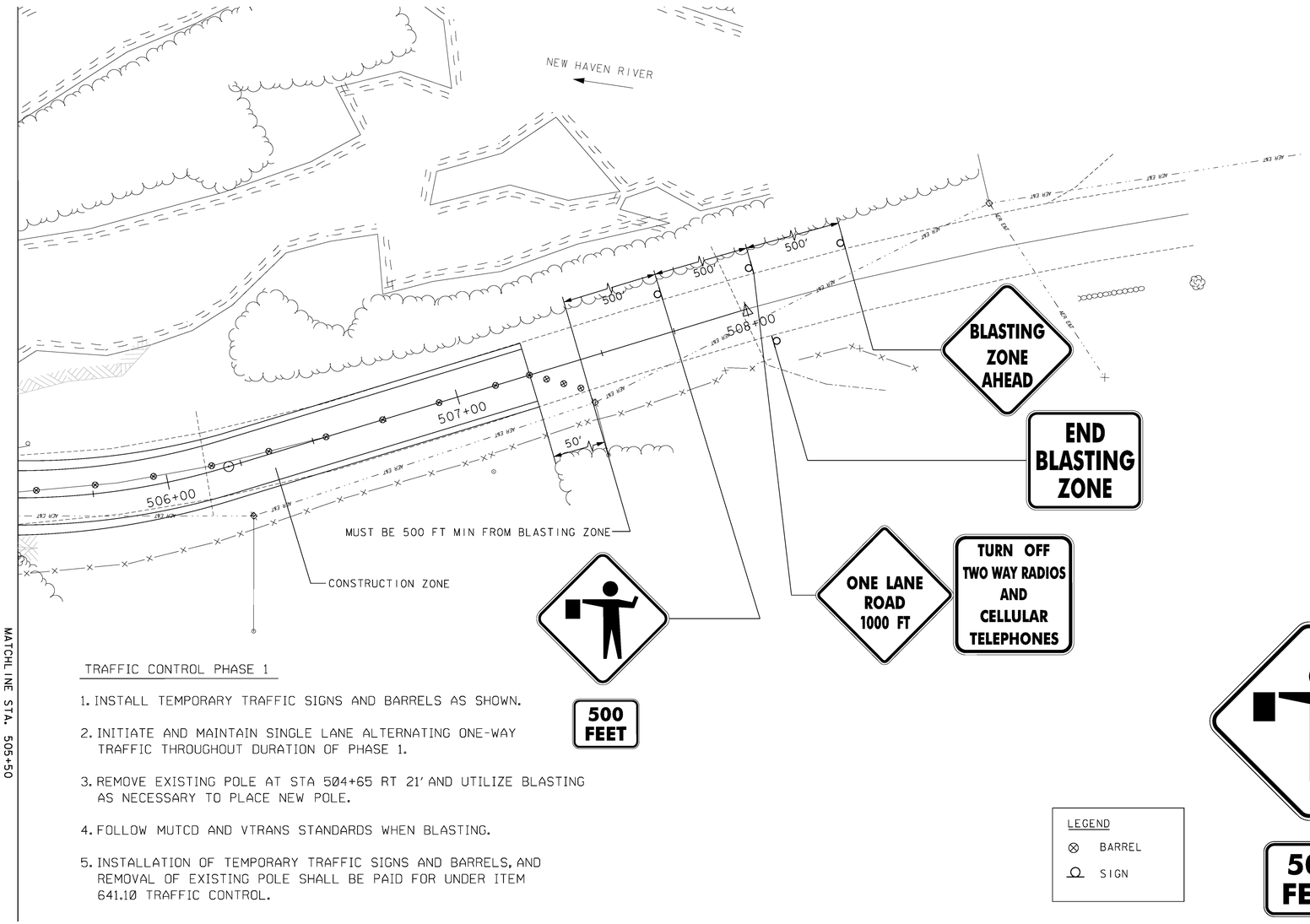


TRAFFIC CONTROL PHASE 1

1. INSTALL TEMPORARY TRAFFIC SIGNS AND BARRELS AS SHOWN.
2. INITIATE AND MAINTAIN SINGLE LANE ALTERNATING ONE-WAY TRAFFIC THROUGHOUT DURATION OF PHASE 1.
3. REMOVE EXISTING POLE AT STA 504+65 RT 21' AND UTILIZE BLASTING AS NECESSARY TO PLACE NEW POLE.
4. FOLLOW MUTCD AND VTRANS STANDARDS WHEN BLASTING.
5. INSTALLATION OF TEMPORARY TRAFFIC SIGNS AND BARRELS, AND REMOVAL OF EXISTING POLE SHALL BE PAID FOR UNDER ITEM 641.10 TRAFFIC CONTROL.

LEGEND

⊗ BARREL

SIGN

W22-1
36" x 36"
COLORS
BLACK TEXT & BORDER
ORANGE BACKGROUND

W22-2
42" x 36"
COLORS
BLACK TEXT & BORDER
ORANGE BACKGROUND

W20-4
36" x 36"
COLORS
BLACK TEXT & BORDER
ORANGE BACKGROUND

W20-7 & W16-2P
36" x 36" 24" x 18"
COLORS
BLACK TEXT & BORDER
ORANGE BACKGROUND

W22-3
42" X 36"
COLORS
BLACK TEXT & BORDER
ORANGE BACKGROUND

## SIGN LEGEND

SCALE 1" = 20'-0

20 0 20

PARSONS BRINCKERHOFF
650 ELM STREET
MANCHESTER, NH 03101

| | | | |
|---|---|---|---|
| PROJECT NAME: | LINCOLN | | |
| PROJECT NUMBER: | BRF 0188 (8) | | |
| FILE NAME: | z10j066tcs_2d.dgn | PLOT DATE: | 8-DEC-2014 |
| PROJECT LEADER: | G.K. DONINGTON | DRAWN BY: | J. KHERA |
| DESIGNED BY: | J. KHERA | CHECKED BY: | R BENJAMIN |
| TRAFFIC CONTROL PHASE I SHEET 2 | | SHEET 15 | OF 62 |

TRAFFIC CONTROL PHASE 2

1. CLOSE ROADWAY USING TEMPORARY SIGNS AND BARRIERS AS SHOWN.
2. CONSTRUCT PROPOSED STRUCTURE.

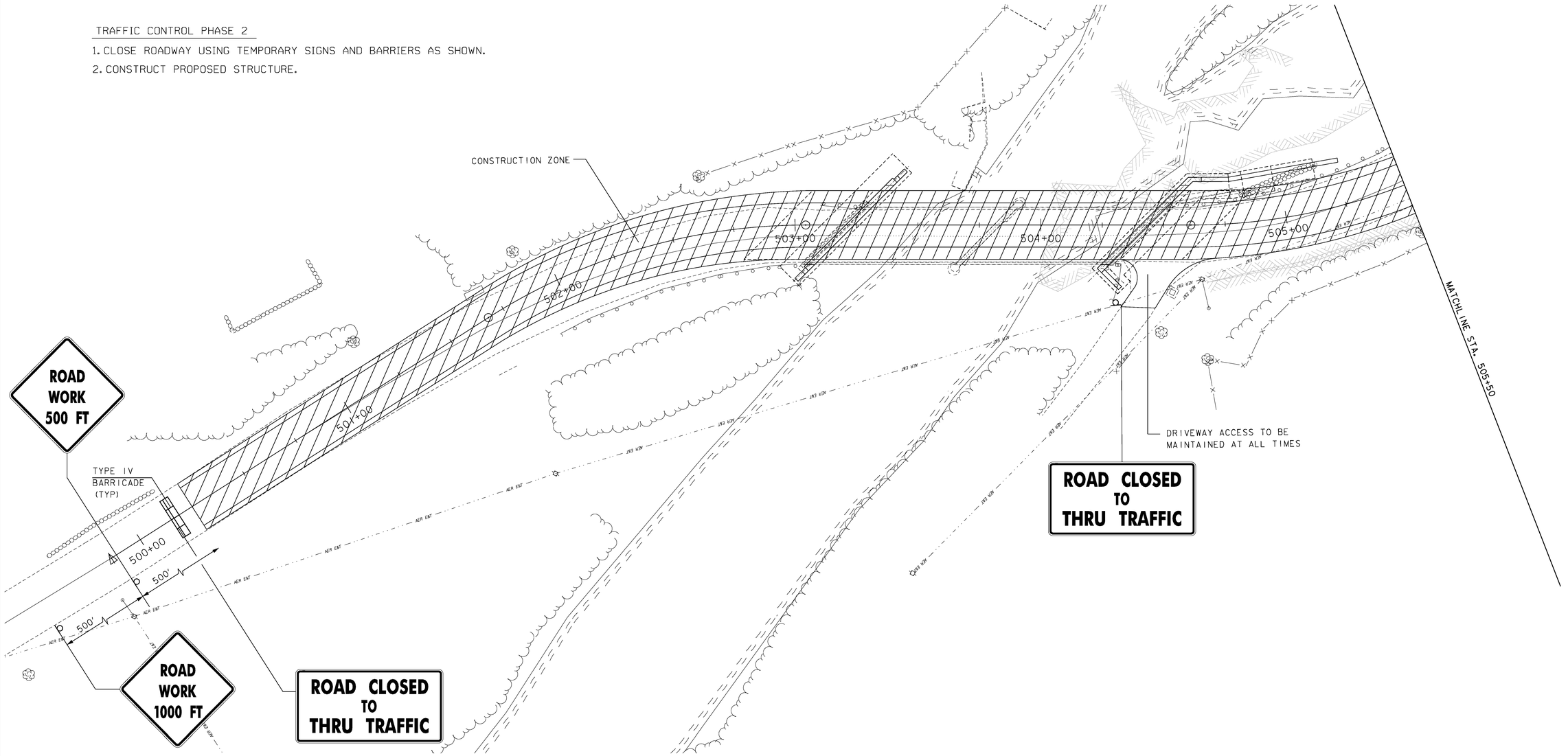


PARSONS BRINCKERHOFF
650 ELM STREET
MANCHESTER, NH 03101

PROJECT NAME: LINCOLN
PROJECT NUMBER: BRF 0188 (8)

FILE NAME: z10j066tcs_2d.dgn
PROJECT LEADER: G.K. DONINGTON
DESIGNED BY: C CARNEY
TRAFFIC CONTROL PHASE 2 SHEET 1

PLOT DATE: 8-DEC-2014
DRAWN BY: C CARNEY
CHECKED BY: R BENJAMIN
SHEET 16 OF 62

TRAFFIC CONTROL PHASE 2

1. CLOSE ROADWAY USING TEMPORARY SIGNS AND BARRIERS AS SHOWN.
2. CONSTRUCT PROPOSED STRUCTURE.

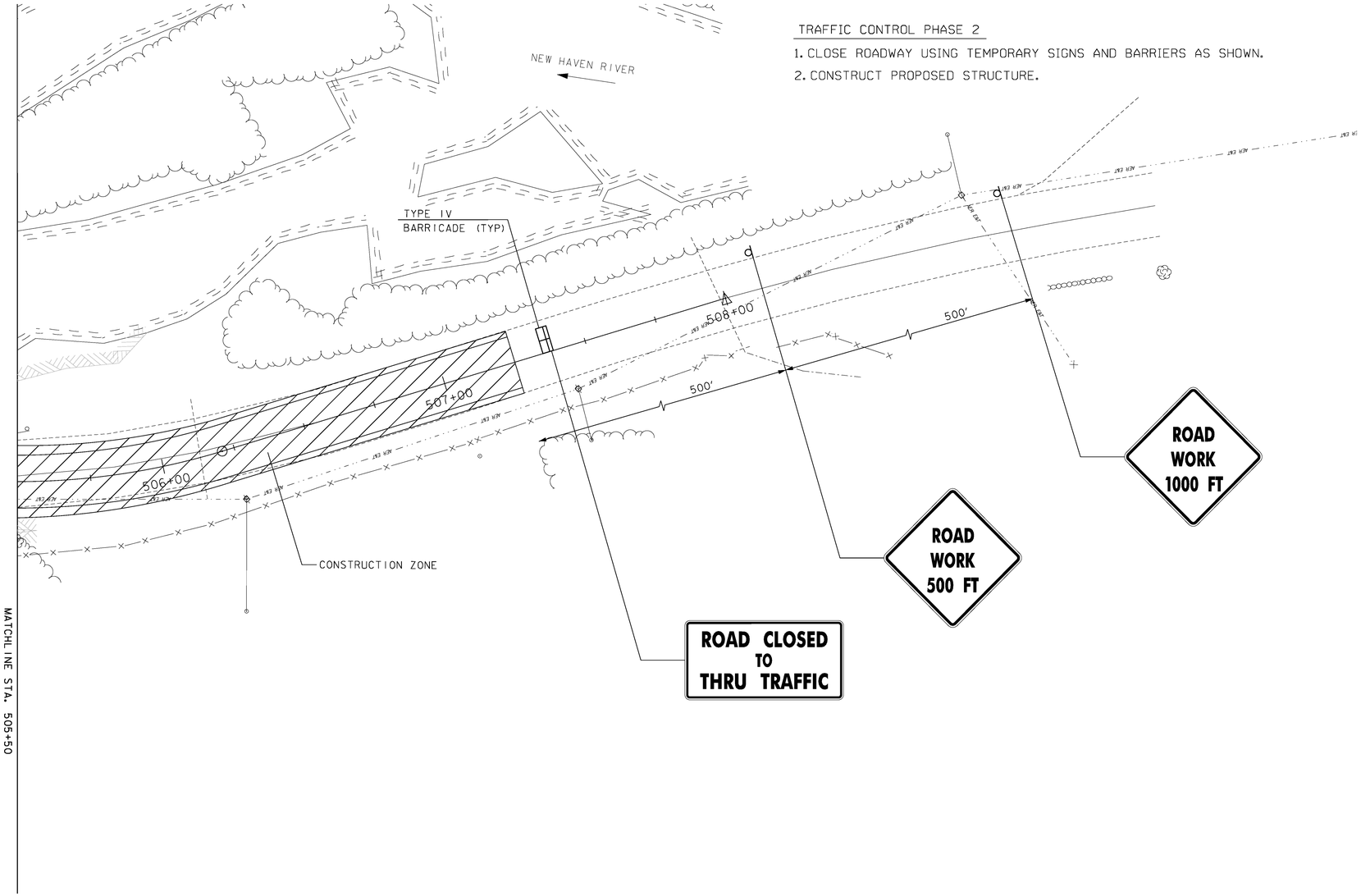

W20-1C
36" x 36"
COLORS
BLACK TEXT & BORDER
ORANGE BACKGROUND

W20-1B
36" x 36"
COLORS
BLACK TEXT & BORDER
ORANGE BACKGROUND

R11-4
60" x 30"
COLORS
BLACK TEXT & BORDER
WITH ORANGE BACKROUND

## SIGN LEGEND

SCALE 1" = 20'-0
20 0 20

PARSONS BRINCKERHOFF
650 ELM STREET
MANCHESTER, NH 03101

| | | | |
|---|---|---|---|
| PROJECT NAME: | LINCOLN | | |
| PROJECT NUMBER: | BRF 0188 (8) | | |
| FILE NAME: | z10j066tcs_2d.dgn | PLOT DATE: | 8-DEC-2014 |
| PROJECT LEADER: | G.K. DONINGTON | DRAWN BY: | C CARNEY |
| DESIGNED BY: | C CARNEY | CHECKED BY: | R BENJAMIN |
| TRAFFIC CONTROL PHASE 2 SHEET 2 | | SHEET 17 | OF 62 |

## SOIL CLASSIFICATION

| AASHTO | |
|---|---|
| A1 | Gravel and Sand |
| A3 | Fine Sand |
| A2 | Silty or Clayey Gravel and Sand |
| A4 | Silty Soil - Low Compressibility |
| A5 | Silty Soil - Highly Compressible |
| A6 | Clayey Soil - Low Compressibility |
| A7 | Clayey Soil - Highly Compressible |

## ROCK QUALITY DESIGNATION

| R.Q.D. (%) | ROCK DESCRIPTION |
|---|---|
| <25 | Very Poor |
| 25 to 50 | Poor |
| 51 to 75 | Fair |
| 76 to 90 | Good |
| >90 | Excellent |

## SHEAR STRENGTH

| UNDRAINED SHEAR STRENGTH IN P.S.F. | CONSISTENCY |
|---|---|
| <250 | Very Soft |
| 250-500 | Soft |
| 500-1000 | Med. Stiff |
| 1000-2000 | Stiff |
| 2000-4000 | Very Stiff |
| >4000 | Hard |

## CORRELATION GUIDE OF "N" TO DENSITY/CONSISTENCY

| DENSITY (GRANULAR SOILS) | | CONSISTENCY (COHESIVE SOILS) | |
|---|---|---|---|
| N | DESCRIPTIVE TERM | N | DESCRIPTIVE TERM |
| <5 | Very Loose | <2 | Very Soft |
| 5-10 | Loose | 2-4 | Soft |
| 11-24 | Med. Dense | 5-8 | Med. Stiff |
| 25-50 | Dense | 9-15 | Stiff |
| >50 | Very Dense | 16-30 | Very Stiff |
| | | 31-60 | Hard |
| | | >60 | Very Hard |

## COMMONLY USED SYMBOLS

| | |
|---|---|
| ▼ | Water Elevation |
| | Standard Penetration Boring |
| ⊕ | Auger Boring |
| ⊙ | Rod Sounding |
| S | Sample |
| N | Standard Penetration Test Blow Count Per Foot For: 2" O.D. Sampler 1 3/8" I.D. Sampler Hammer Weight Of 140 Lbs. Hammer Fall Of 30" |
| VS | Field Vane Shear Test |
| US | Undisturbed Soil Sample |
| B | Blast |
| DC | Diamond Core |
| MD | Mud Drill |
| WA | Wash Ahead |
| HSA | Hollow Stem Auger |
| AX | Core Size 1 1/8" |
| BX | Core Size 1 5/8" |
| NX | Core Size 2 1/8" |
| M | Double Tube Core Barrel Used |
| LL | Liquid Limit |
| PL | Plastic Limit |
| PI | Plasticity Index |
| NP | Non Plastic |
| w | Moisture Content (Dry Wgt. Basis) |
| D | Dry |
| M | Moist |
| MTW | Moist To Wet |
| W | Wet |
| Sat | Saturated |
| Bo | Boulder |
| Gr | Gravel |
| Sa | Sand |
| Si | Silt |
| Cl | Clay |
| HP | Hardpan |
| Le | Ledge |
| NLTD | No Ledge To Depth |
| CNPF | Can Not Penetrate Further |
| TLOB | Top of Ledge Or Boulder |
| NR | No Recovery |
| Rec. | Recovery |
| %Rec. | Percent Recovery |
| RQD | Rock Quality Designation |
| CBR | California Bearing Ratio |
| < | Less Than |
| > | Greater Than |
| R | Refusal (N > 100) |
| VTSPG | NAD83 - See Note 7 |

### COLOR

| | | | |
|---|---|---|---|
| blk | Black | pnk | Pink |
| bl | Blue | pu | Purple |
| brn | Brown | rd | Red |
| dk | Dark | tn | Tan |
| gry | Gray | wh | White |
| gn | Green | yel | Yellow |
| lt | Light | mltc | Multicolored |
| or | Orange | | |

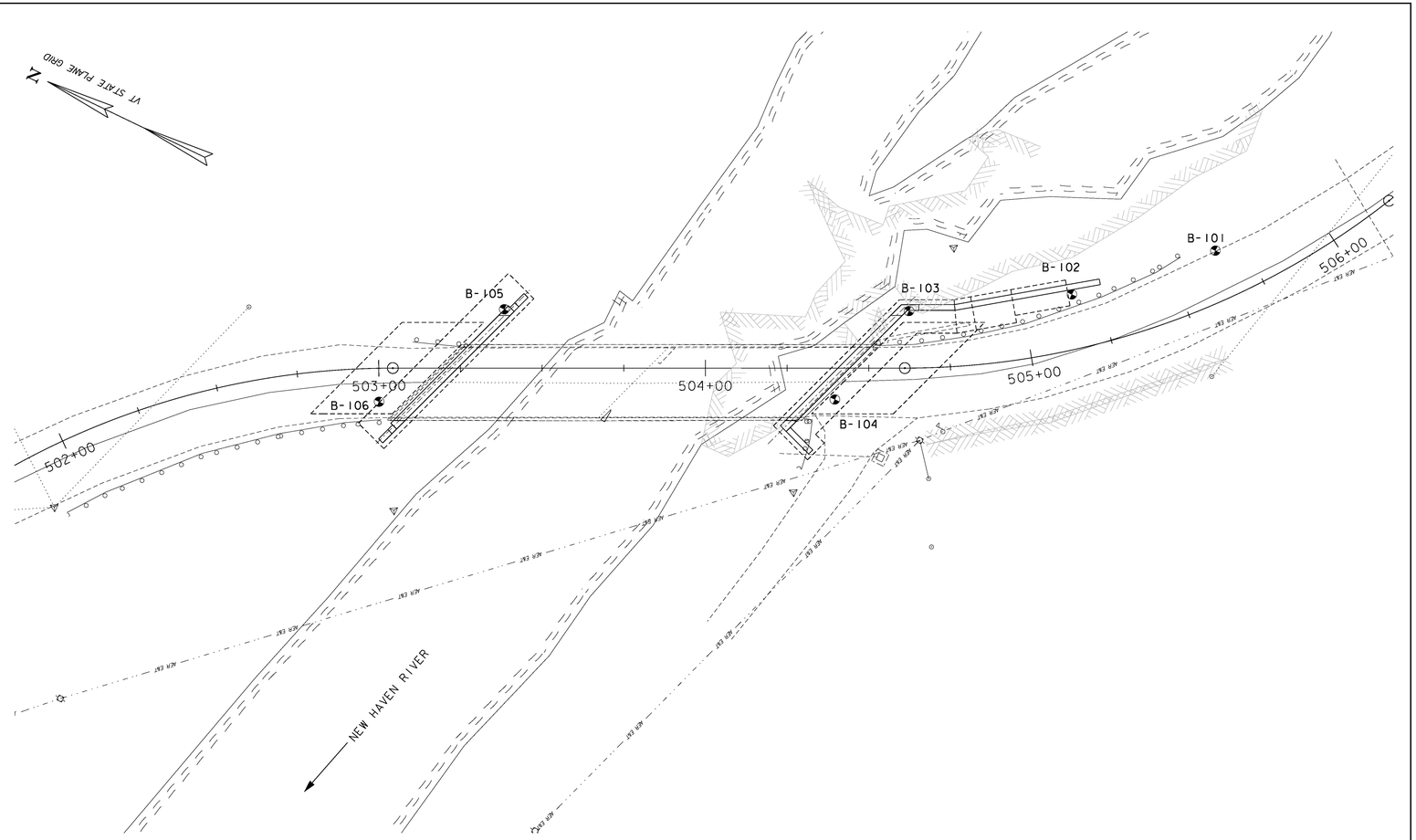


| HOLE NO. | STATION | OFFSET (FT) | NORTHING | EASTING | DEPTH TO BEDROCK | GROUND ELEVATION |
|---|---|---|---|---|---|---|
| B-101 | EAST RIVER RD (TH 1) 505+65.7 | 14.9 LT | 583788.26 | 1511629.61 | 4.50 | 1001.16 |
| B-102 | EAST RIVER RD (TH 1) 505+16.5 | 16.6 LT | 583822.03 | 1511598.47 | 3.70 | 1000.00 |
| B-103 | EAST RIVER RD (TH 1) 504+62.4 | 17.5 LT | 583864.74 | 1511572.27 | 0.50 | 985.21 |
| B-104 | EAST RIVER RD (TH 1) 504+39.6 | 9.6 RT | 583873.44 | 1511538.02 | 11.10 | 999.53 |
| B-105 | EAST RIVER RD (TH 1) 503+38.4 | 18.0 LT | 583976.61 | 1511519.00 | 9.40 | 993.58 |
| B-106 | EAST RIVER RD (TH 1) 502+99.9 | 10.3 RT | 583998.83 | 1511476.87 | 12.50 | 998.07 |

NOTE:
"B-101, B-102 AND B-103 WERE HAND STEEL SOUNDINGS THAT WERE ADVANCED TO DEPTHS OF PRESUMED BEDROCK, WHICH WAS EXPOSED ABOVE GROUND ON THE WESTERN SIDE OF THE ROADWAY.

SCALE 1" = 20'-0
20 0 20

## DEFINITIONS (AASHTO)

BEDROCK (LEDGE) - Rock in its native location of indefinite thickness.

BOULDER - A rock fragment with an average dimension > 12 inches.

COBBLE - Rock fragments with an average dimension between 3 and 12 inches.

GRAVEL - Rounded particles of rock < 3" and > 0.0787" (#10 sieve).

SAND - Particles of rock < 0.0787" (#10 sieve) and > 0.0029" (#200 sieve).

SILT - Soil < 0.0029" (#200 sieve), non or slightly plastic and exhibits no strength when air-dried.

CLAY - Fine grained soil, exhibits plasticity when moist and considerable strength when air-dried.

VARVED - Alternate layers of silt and clay.

HARDPAN - Extremely dense soil, cemented layer, not softened when wet.

MUCK - Soft organic soil (containing > 10% organic material.

MOISTURE CONTENT - Weight of water divided by dry weight of soil.

FLOWING SAND - Granular soil so saturated (loose) that it flows into drill casing during extraction of wash rod.

STRIKE - Angle from magnetic north to line of intersection of bed with a horizontal plane.

DIP - Inclination of bed with a horizontal plane.

## GENERAL NOTES

1. The subsurface explorations shown herein were made between Dec 8 and Dec 27, 2011 by the Agency.
2. Soil and rock classifications, properties and descriptions are based on engineering interpretation from available subsurface information by the Agency and may not necessarily reflect actual variations in subsurface conditions that may be encountered between individual boring or sample locations.
3. Observed water levels and/or conditions indicated are as recorded at the time of exploration and may vary according to the prevailing rainfall, methods of exploration and other factors.
4. Engineering judgment was exercised in preparing the subsurface information presented herein. Analysis and interpretation of subsurface data was performed and interpreted for Agency design and estimating purposes. Presentation of the information in the Contract is intended to provide the Contractor access to the same data available to the Agency. The subsurface information is presented in good faith and is not intended as a substitute for personal investigation, independent interpretation, independent analysis or judgment by the Contractor.
5. Pictorial structure details shown on the boring plan layout or soils profile are for illustrative purposes only and may not accurately portray final contract details.
6. Terminology used on boring logs to describe the hardness, degree of weathering, and spacing of fractures, joints and other discontinuities in the bedrock is defined in the AASHTO Manual on Subsurface Investigations, 1988.
7. Northing and Easting coordinates are shown in Vermont State Plane Grid North American Datum 1983 in meters and survey feet.

PARSONS BRINCKERHOFF
650 ELM STREET
MANCHESTER, NH 03101

PROJECT NAME: LINCOLN
PROJECT NUMBER: BRF 0188 (8)

FILE NAME: z10j066bor.dgn
PROJECT LEADER: G.K. DONINGTON
DESIGNED BY: P. ARMANO
BORING LOCATION PLAN

PLOT DATE: 8-DEC-2014
DRAWN BY: W. GERHOLD
CHECKED BY: A. STOCKIN
SHEET 18 OF 62

STATE OF VERMONT
AGENCY OF TRANSPORTATION
CONSTRUCTION AND
MATERIALS BUREAU
CENTRAL LABORATORY

# BORING LOG

**LINCOLN**
**BRF 0188(8)**
**TH-1 BR-19**

Boring No.: **B-104**
Page No.: 1 of 1
Pin No.: 10J066
Checked By: CCB

Boring Crew: GARROW, WELLS
Date Started: 12/22/11 Date Finished: 12/27/11
VTSPG NAD83: N 583873.44 ft E 1511538.02 ft
Station: 504+39.6 Offset: 9.60
Ground Elevation: 999.53 ft

| | Casing | Sampler |
|---|---|---|
| Type: | WB | SS |
| I.D.: | 4 in | 1.5 in |
| Hammer Wt: | N.A. | 140 lb. |
| Hammer Fall: | N.A. | 30 in. |
| Hammer/Rod Type: | Auto/AWJ | |
| Rig: | CME 45C SKID | $C_e$ = 1.33 |

Groundwater Observations

| Date | Depth (ft) | Notes |
|---|---|---|
| | | No Water to Depth. |

| Depth (ft) | Strata (1) | CLASSIFICATION OF MATERIALS (Description) | Run (Dip deg.) | Core Rec. % (RQD %) | Drill Rate minutes/ft | Blows/6" (N Value) | Moisture Content % | Gravel % | Sand % | Fines % |
|---|---|---|---|---|---|---|---|---|---|---|
| | | Asphalt Pavement, 0.0 ft - 0.7 ft | | | | | | | | |
| 2.5 | | A-1-b, SaGr, brn, Moist, Rec. = 1.7 ft | | | | 40-30-18-13 (48) | 6.0 | 49.8 | 36.8 | 13.4 |
| 5.0 | | A-1-a, Gr, gry, Wet, Rec. = 0.8 ft | | | | 14-15-12-3 (27) | 9.4 | 77.7 | 17.5 | 4.8 |
| | | A-1-a, SaGr, gry, Dry, Rec. = 1.0 ft | | | | 25-17-21-11 (38) | 2.6 | 67.1 | 20.7 | 12.2 |
| 7.5 | | A-1-a, SaGr, gry, Moist, Rec. = 1.2 ft | | | | 3-4-7-6 (11) | 11.8 | 63.8 | 26.0 | 10.2 |
| | | Field Note:, Stone in sampler. Appears to be Gravel, gry, Wet | | | | R@2.5" | | | | |
| 10.0 | | NXDC, Concrete, 9.2 ft - 11.1 ft | | | | | | | | |
| | | 11.1 ft - 15.1 ft, Gray, Phyllitic Schist, with some large quartz veins. Moderately hard, Unweathered, Good rock, NXMDC, RMR = 66 | 1 (45) | 90 (83) | 9 9 8 11 | Top of Bedrock @ 11.1 ft | | | | |
| 12.5 | | | | | | | | | | |
| 15.0 | | 15.1 ft - 16.1 ft, Gray, Phyllitic Schist, with some large quartz veins. Moderately hard, Unweathered, Good rock, NXMDC, RMR = 62 | 2 (45) | 80 (70) | 20 | | | | | |
| | | Hole stopped @ 16.1 ft | | | | | | | | |
| 17.5 | | | | | | | | | | |
| 20.0 | | | | | | | | | | |
| 22.5 | | | | | | | | | | |

Notes:
1. Stratification lines represent approximate boundary between material types. Transition may be gradual.
2. N Values have not been corrected for hammer energy. $C_e$ is the hammer energy correction factor.
3. Water level readings have been made at times and under conditions stated. Fluctuations may occur due to other factors than those present at the time measurements were made.

BORING LOG 2 LINCOLN BRF 0188(8).GPJ VERMONT AOT.GDT 11/21/14

Top of Footing
Abutment 2
Elev. = 993.00
(UPPER)

Top of Footing
Abutment 2
Elev. = 989.00
(LOWER)

STATE OF VERMONT
AGENCY OF TRANSPORTATION
CONSTRUCTION AND
MATERIALS BUREAU
CENTRAL LABORATORY

# BORING LOG

**LINCOLN**
**BRF 0188(8)**
**TH-1 BR-19**

Boring No.: **B-105**
Page No.: 1 of 1
Pin No.: 10J066
Checked By: CCB

Boring Crew: GARROW, SALISBURY, THOMAS
Date Started: 12/08/11 Date Finished: 12/08/11
VTSPG NAD83: N 583976.61 ft E 1511519.00 ft
Station: 503+38.4 Offset: -18.00
Ground Elevation: 993.58 ft

| | Casing | Sampler |
|---|---|---|
| Type: | WB | SS |
| I.D.: | 4 in | 1.5 in |
| Hammer Wt: | N.A. | 140 lb. |
| Hammer Fall: | N.A. | 30 in. |
| Hammer/Rod Type: | Auto/AWJ | |
| Rig: | CME 45C SKID | $C_e$ = 1.33 |

Groundwater Observations

| Date | Depth (ft) | Notes |
|---|---|---|
| | | None taken. |

| Depth (ft) | Strata (1) | CLASSIFICATION OF MATERIALS (Description) | Run (Dip deg.) | Core Rec. % (RQD %) | Drill Rate minutes/ft | Blows/6" (N Value) | Moisture Content % | Gravel % | Sand % | Fines % |
|---|---|---|---|---|---|---|---|---|---|---|
| | | A-2-4, GrSiSa with grass & roots, brn, Moist, Rec. = 0.5 ft | | | | WH-WH-WH-2 (WH) | 24.8 | 24.9 | 48.4 | 26.7 |
| 2.5 | | A-1-b, SiSaGr, brn, MTD, Rec. = 0.6 ft, Broken Rock was within sample. | | | | 7-12-11-10 (23) | 7.8 | 43.7 | 30.8 | 25.5 |
| 5.0 | | Visual Classification, SiSa with Broken Rock, brn, Dry, Rec. = 0.2 ft, Insufficient sample for testing. Material similar as 6-8 ft. | | | | 9-7-9-5 (16) | | | | |
| | | A-2-4, GrSiSa, brn, MTW, Rec. = 0.9 ft, Broken Rock was within sample. | | | | 7-12-12-17 (24) | 11.0 | 26.0 | 46.9 | 27.1 |
| 7.5 | | Field Note:, NXDC, Cobbles | | | | | | | | |
| 10.0 | | 9.4 ft - 12.4 ft, Light gray, Phyllitic Schist, with some quartz veins. Quartz vein at 12.1 to 12.4 ft has slight orange staining along joint. Moderately hard, Unweathered, Good rock, NXMDC, RMR = 71 | 1 (23) | 100 (80) | 7 7 5 | Top of Bedrock @ 9.4 ft | | | | |
| 12.5 | | 12.4 ft - 16.4 ft, Gray, Phyllitic Schist, with some quartz veins. Yellow/orange stained joints at 14.0 to 14.2 feet. Moderately hard, Unweathered, Good rock, NXMDC, RMR = 71 | 2 (?) | 93 (80) | 4 10 5 5 | | | | | |
| 15.0 | | | | | | | | | | |
| 17.5 | | 16.4 ft - 19.4 ft, Gray, Phyllitic Schist, with quartz veins. Orange stained joint at 16.4 feet. Moderately hard, Unweathered, Good rock, NXMDC, RMR = 71 | 3 (?) | 80 (80) | 5 7 9 | | | | | |
| | | Hole stopped @ 19.4 ft | | | | | | | | |
| 20.0 | | | | | | | | | | |
| 22.5 | | | | | | | | | | |

Notes:
1. Stratification lines represent approximate boundary between material types. Transition may be gradual.
2. N Values have not been corrected for hammer energy. $C_e$ is the hammer energy correction factor.
3. Water level readings have been made at times and under conditions stated. Fluctuations may occur due to other factors than those present at the time measurements were made.

BORING LOG 2 LINCOLN BRF 0188(8).GPJ VERMONT AOT.GDT 11/21/14

Top of Footing
Abutment 1
Elev. = 988.50

STATE OF VERMONT
AGENCY OF TRANSPORTATION
CONSTRUCTION AND
MATERIALS BUREAU
CENTRAL LABORATORY

# BORING LOG

**LINCOLN**
**BRF 0188(8)**
**TH-1 BR-19**

Boring No.: **B-106**
Page No.: 1 of 1
Pin No.: 10J066
Checked By: CCB

Boring Crew: GARROW, WELLS
Date Started: 12/21/11 Date Finished: 12/22/11
VTSPG NAD83: N 583998.83 ft E 1511476.87 ft
Station: 502+99.9 Offset: 10.30
Ground Elevation: 998.07 ft

| | Casing | Sampler |
|---|---|---|
| Type: | WB | SS |
| I.D.: | 4 in | 1.5 in |
| Hammer Wt: | N.A. | 140 lb. |
| Hammer Fall: | N.A. | 30 in. |
| Hammer/Rod Type: | Auto/AWJ | |
| Rig: | CME 45C SKID | $C_e$ = 1.33 |

Groundwater Observations

| Date | Depth (ft) | Notes |
|---|---|---|
| 12/22/11 | 11.9 | AM |

| Depth (ft) | Strata (1) | CLASSIFICATION OF MATERIALS (Description) | Run (Dip deg.) | Core Rec. % (RQD %) | Drill Rate minutes/ft | Blows/6" (N Value) | Moisture Content % | Gravel % | Sand % | Fines % |
|---|---|---|---|---|---|---|---|---|---|---|
| | | Asphalt Pavement, 0.0 ft - 1.0 ft | | | | | | | | |
| 2.5 | | A-1-a, SaGr, brn, Wet, Rec. = 1.4 ft | | | | 12-10-9-7 (19) | 8.5 | 61.4 | 29.7 | 8.9 |
| | | A-1-a, Gr, brn, Wet, Rec. = 1.0 ft | | | | 10-4-4-2 (8) | 7.4 | 73.4 | 19.5 | 7.1 |
| 5.0 | | A-1-a, Gr, gry, Wet, Rec. = 0.2 ft, Washed Stone Fill. | | | | 10-7-3-3 (10) | 2.3 | 99.2 | 0.7 | 0.1 |
| 7.5 | | A-1-a, SaGr, brn, Wet, Rec. = 1.0 ft, Trace of Wood shavings. | | | | 4-R@6.0" | 16.4 | 53.4 | 35.7 | 10.9 |
| | | Field Note:, NXDC, Cleaned out barrel. Appears to be Sandy Gravel | | | | | | | | |
| 10.0 | | Field Note:, No Recovery. Appears to be Sandy Silt | | | | 3-4-5-5 (9) | | | | |
| | | A-2-4, SiGrSa, gry, Wet, Rec. = 1.0 ft, Broken Rock was within sample. | | | | 6-7-R@6.0" | 15.8 | 25.2 | 52.6 | 22.2 |
| 12.5 | | 12.5 ft - 15.5 ft, Gray, Phyllitic Schist, with some quartz veins. Moderately hard, Unweathered, Fair rock, NXMDC, RMR = 52 | 1 (45) | 93 (12) | 5 5 5 9 | Top of Bedrock @ 12.5 ft | | | | |
| 15.0 | | 15.5 ft - 20.5 ft, Gray, Phyllitic Schist, with some quartz veins. Moderately hard, Unweathered, Good rock, NXMDC, Yellow/orange stained joint at 17.95 ft. RMR = 69 | 2 (45) | 100 (96) | 8 6 5 5 5 | | | | | |
| 17.5 | | | | | | | | | | |
| 20.0 | | | | | | | | | | |
| | | 20.5 ft - 22.5 ft, Gray, Phyllitic Schist, with quartz veins. Moderately hard, Unweathered, Good rock, NXMDC, RMR = 69 | 3 (45) | 95 (95) | 5 5 5 | | | | | |
| 22.5 | | Hole stopped @ 22.5 ft | | | | | | | | |

Notes:
1. Stratification lines represent approximate boundary between material types. Transition may be gradual.
2. N Values have not been corrected for hammer energy. $C_e$ is the hammer energy correction factor.
3. Water level readings have been made at times and under conditions stated. Fluctuations may occur due to other factors than those present at the time measurements were made.

BORING LOG 2 LINCOLN BRF 0188(8).GPJ VERMONT AOT.GDT 11/21/14

Top of Footing
Abutment 1
Elev. = 988.50

| | |
|---|---|
| PROJECT NAME: | LINCOLN |
| PROJECT NUMBER: | BRF 0188 (8) |
| FILE NAME: z10J066bor.dgn | PLOT DATE: 8-DEC-2014 |
| PROJECT LEADER: G.K. DONINGTON | DRAWN BY: W GERHOLD |
| DESIGNED BY: P ARMANO | CHECKED BY: A STOCKIN |
| BORING LOG SHEET | SHEET 19 OF 62 |

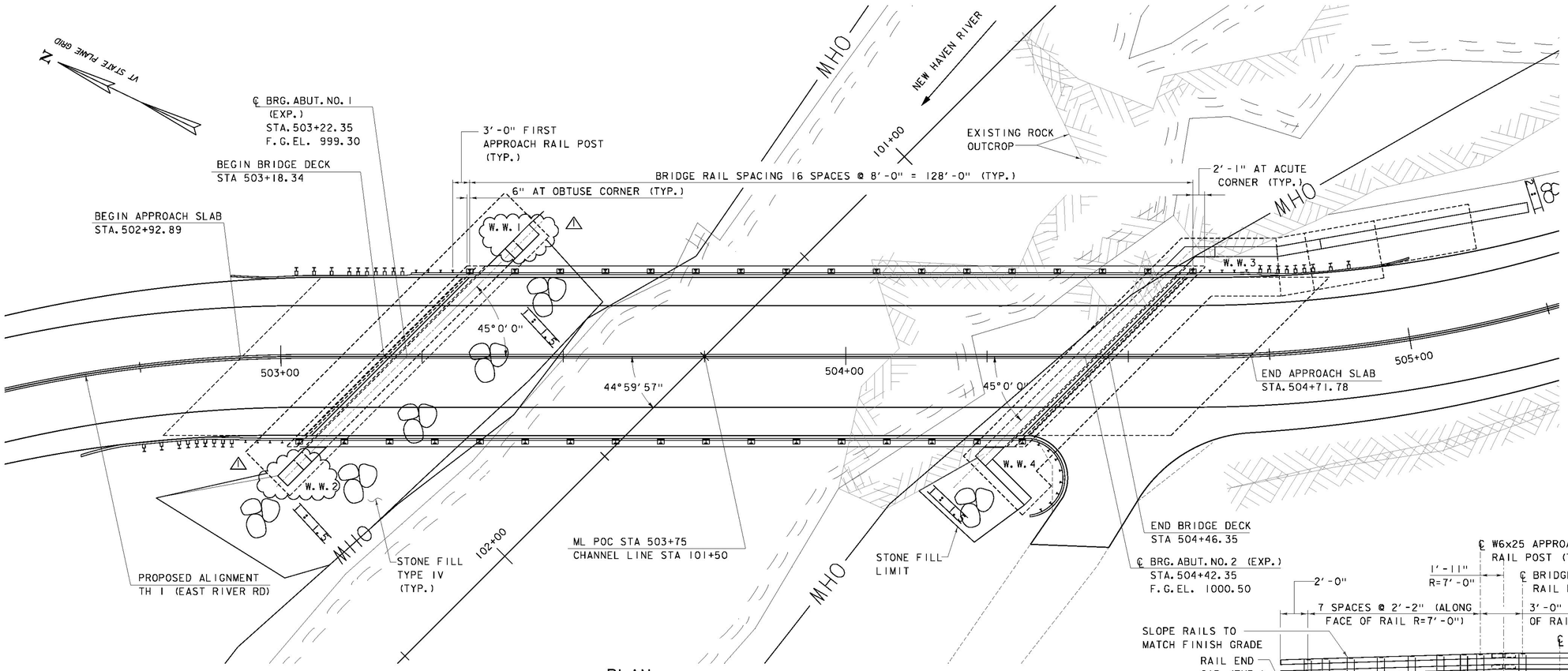


## PLAN

SCALE: 1" = 10'-0"

## APPROACH RAIL ELEVATION AT WW4

SCALE: 1/4" = 1'-0"

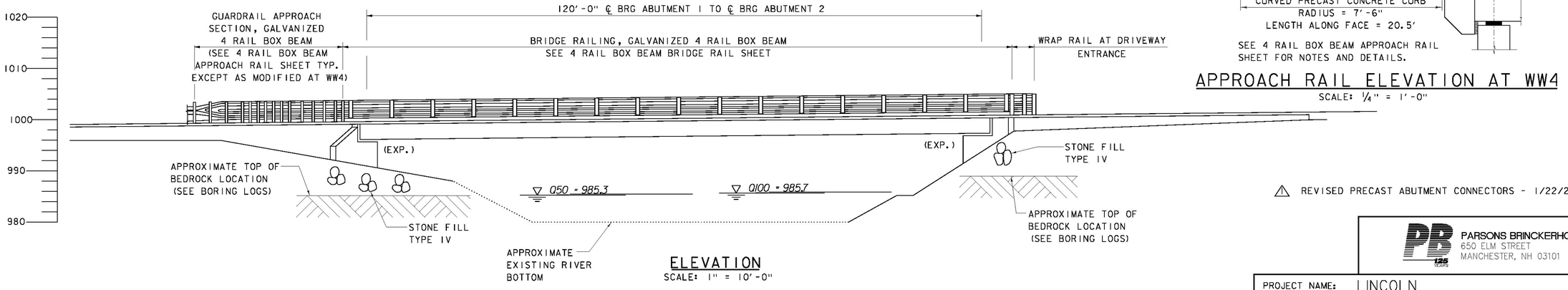


## ELEVATION

SCALE: 1" = 10'-0"

⚠ REVISED PRECAST ABUTMENT CONNECTORS - 1/22/2015

PARSONS BRINCKERHOFF
650 ELM STREET
MANCHESTER, NH 03101

PROJECT NAME: LINCOLN

PROJECT NUMBER: BRF 0188 (8)

FILE NAME: z101066pe.dgn
PROJECT LEADER: G.K. DONINGTON
DESIGNED BY: K JAMES
PLAN AND ELEVATION SHEET

PLOT DATE: 8-DEC-2014
DRAWN BY: W GERHOLD
CHECKED BY: A STOCKIN

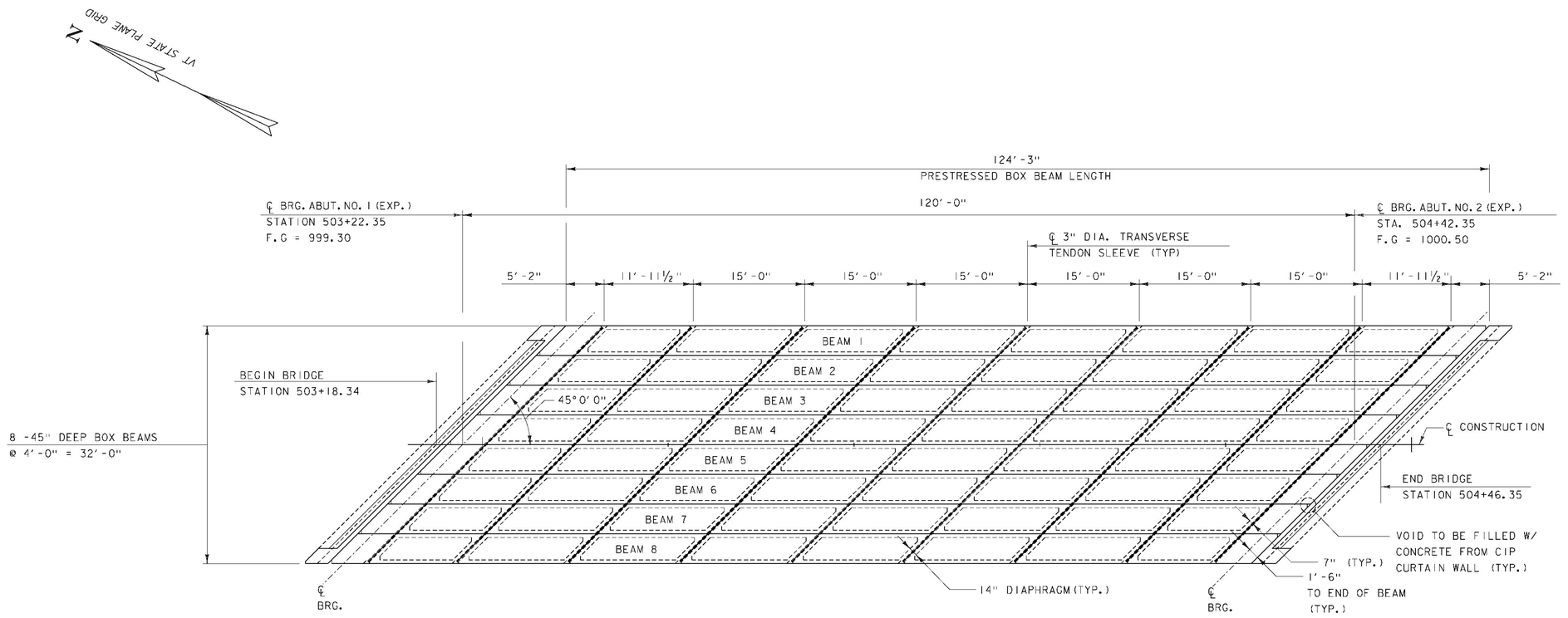


## FRAMING PLAN

SCALE: ⅛" = 1'-0"

PARSONS BRINCKERHOFF
650 ELM STREET
MANCHESTER, NH 03101

PROJECT NAME: LINCOLN

PROJECT NUMBER: BRF 0188 (8)

FILE NAME: z101066sup.dgn
PROJECT LEADER: G.K. DONINGTON
DESIGNED BY: K JAMES
FRAMING PLAN

PLOT DATE: 8-DEC-2014
DRAWN BY: W GERHOLD
CHECKED BY: A STOCKIN
SHEET 21 OF 62

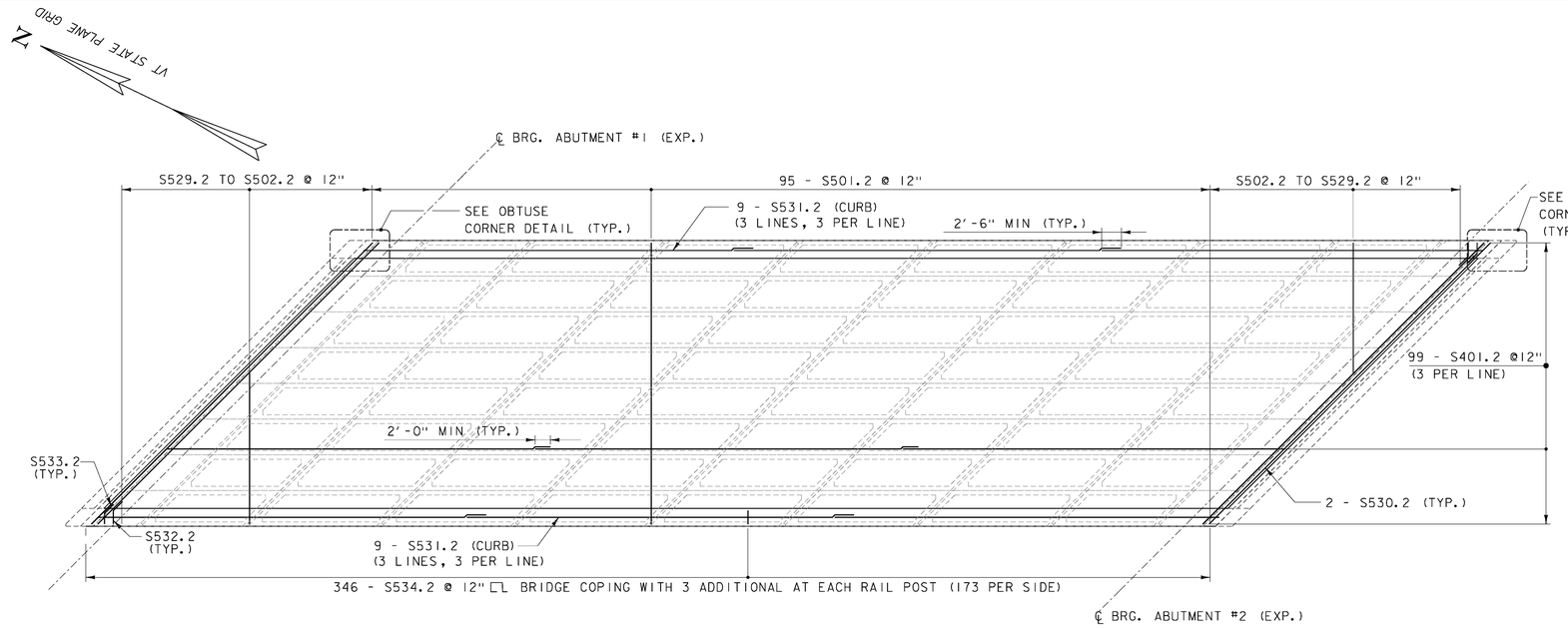


## DECK REINFORCING PLAN

SCALE: 1/8" = 1'-0"

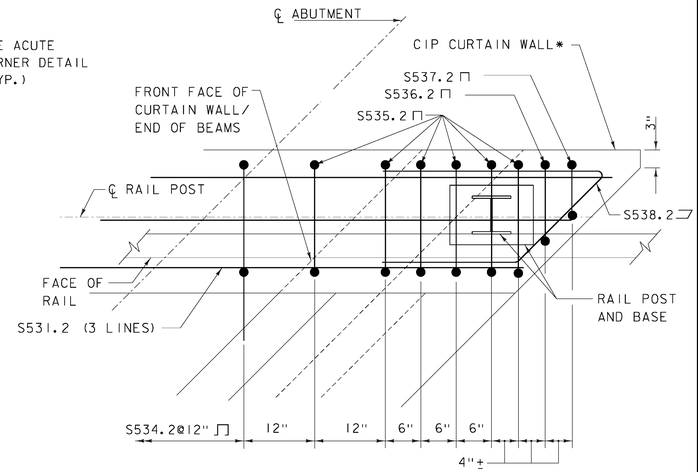


## ACUTE CORNER DETAIL

SCALE: 1" = 1'-0"

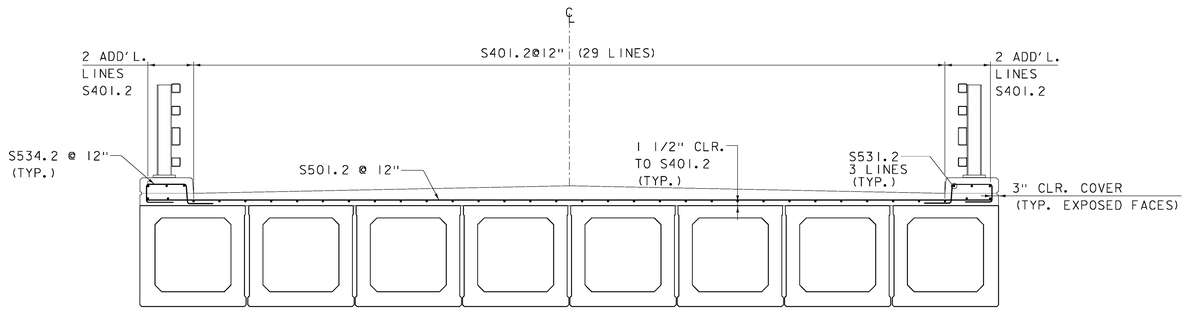


## DECK REINFORCING TYPICAL SECTION

SCALE: 3/8" = 1'-0"

NOTE:
ANCHOR ASSEMBLY FOR EACH BRIDGE RAIL POST SHALL BE INSTALLED PRIOR TO PLACEMENT OF BRIDGE DECK OVERLAY.

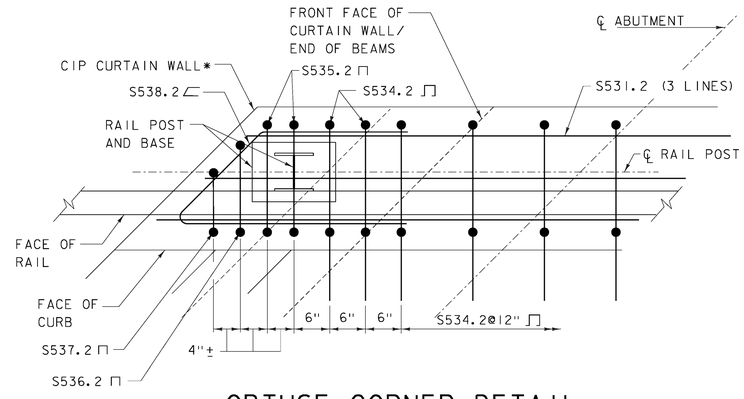


## OBTUSE CORNER DETAIL

SCALE: 1" = 1'-0"

* SEE CURTAIN WALL DETAILS SHEET FOR REINFORCEMENT IN CURTAIN WALL.

PARSONS BRINCKERHOFF
650 ELM STREET
MANCHESTER, NH 03101

PROJECT NAME: LINCOLN
PROJECT NUMBER: BRF 0188 (8)

FILE NAME: z10j066sup2.dgn
PROJECT LEADER: G.K. DONINGTON
DESIGNED BY: R. GAUDREAU
DECK REINFORCEMENT SHEET

PLOT DATE: 8-DEC-2014
DRAWN BY: R. GAUDREAU
CHECKED BY: A STOCKIN
SHEET 22 OF 62

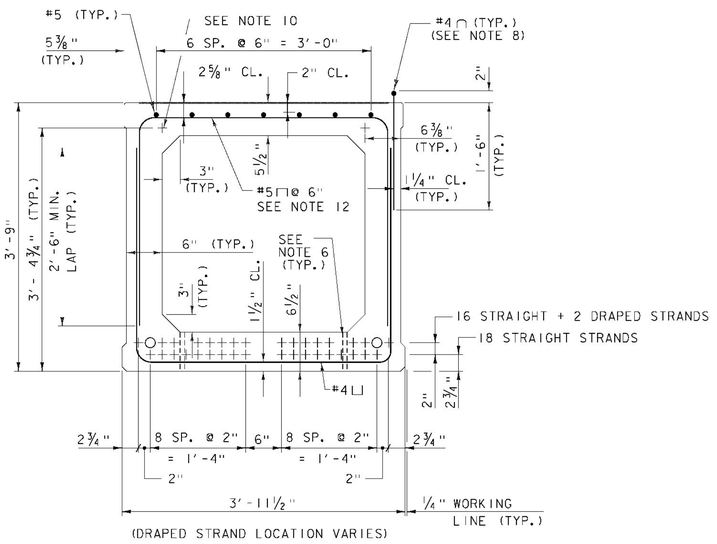


(DRAPED STRAND LOCATION VARIES)

## TYPICAL BEAM SECTION

SCALE: 1" = 1'-0"

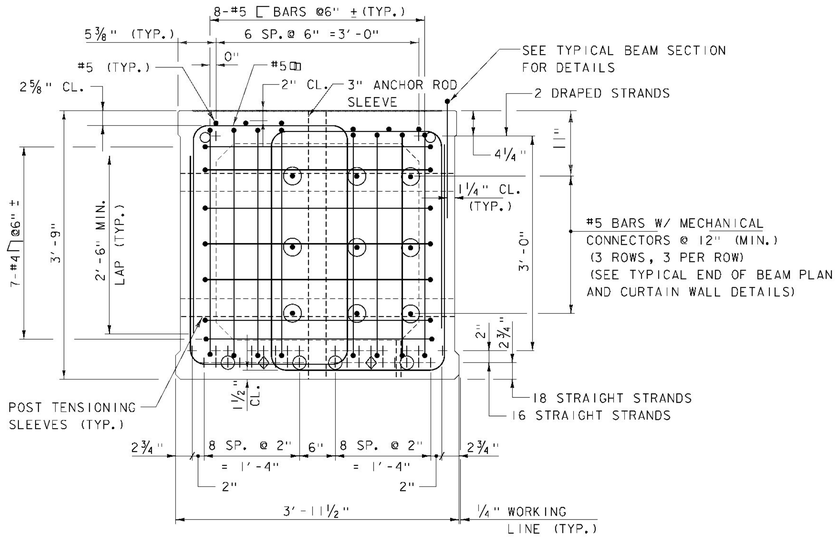


## TYPICAL SECTION AT BEAM END

SCALE: 1" = 1'-0"

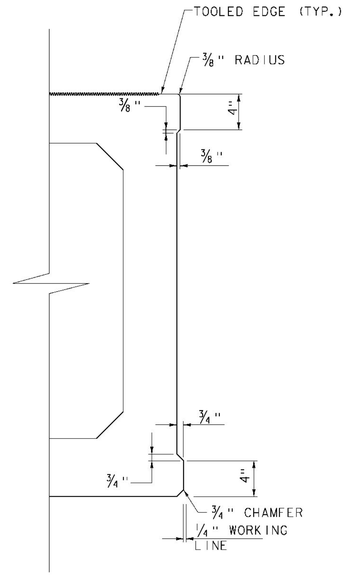


## SHEAR KEY DETAIL

SCALE: 1½" = 1'-0"

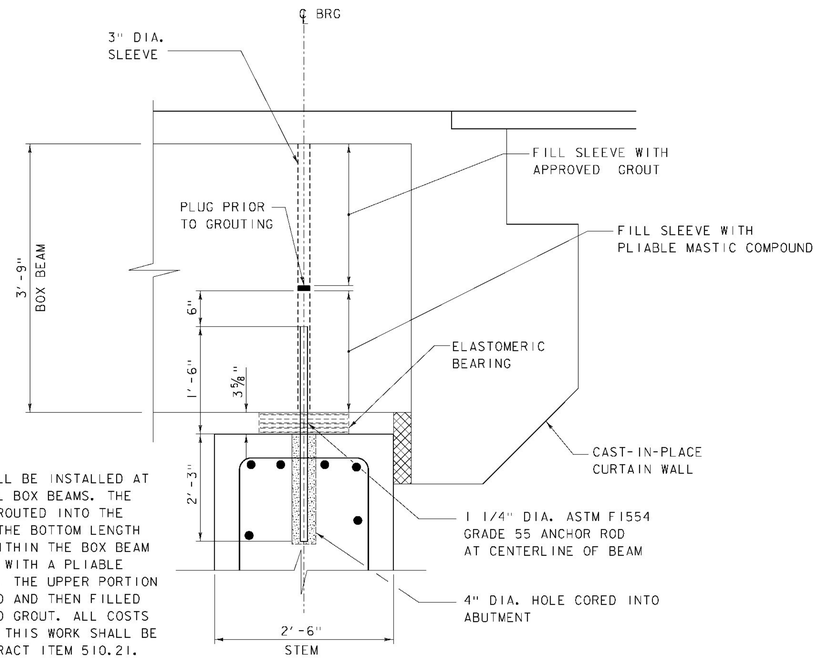


NOTE:
ANCHOR RODS SHALL BE INSTALLED AT BOTH ENDS OF ALL BOX BEAMS. THE RODS SHALL BE GROUTED INTO THE ABUTMENT STEM. THE BOTTOM LENGTH OF THE SLEEVE WITHIN THE BOX BEAM SHALL BE FILLED WITH A PLIABLE MASTIC COMPOUND. THE UPPER PORTION SHALL BE PLUGGED AND THEN FILLED WITH AN APPROVED GROUT. ALL COSTS ASSOCIATED WITH THIS WORK SHALL BE PAID UNDER CONTRACT ITEM 510.21.

## BEAM ANCHOR DETAIL

SCALE: 1" = 1'-0"

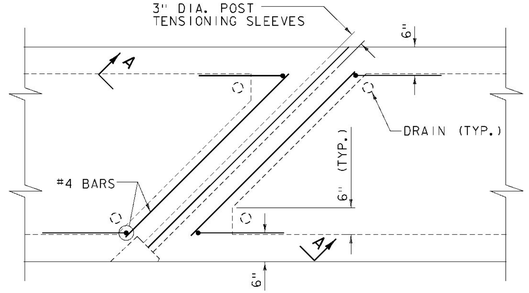


## PLAN DIAPHRAGM REINFORCING

SCALE: ¾" = 1'-0"

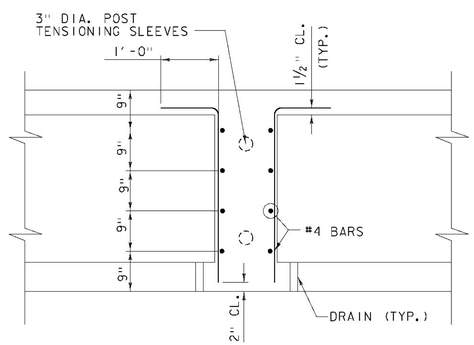


## SECTION A-A

SCALE: ¾" = 1'-0"

REINFORCING SHOWN IN THIS DIAPHRAGM REINFORCING PLAN IS IN ADDITION TO THAT SHOWN IN THE TYPICAL BEAM SECTION. REINFORCEMENT SHOWN IN THE TYPICAL BEAM SECTION IS OMITTED HERE FOR CLARITY.

NOTES:
1. + DENOTES STRAIGHT 0.6" DIAMETER PRESTRESSING STRANDS.
2. ○ DENOTES DRAPED 0.6" DIAMETER PRESTRESSING STRANDS.
3. ⊕ DENOTES DEBONDED STRANDS 5'-0" AT EACH END OF BEAM.
4. ⊗ DENOTES DEBONDED STRANDS 7'-0" AT EACH END OF BEAM.
5. AT EACH END OF BEAM, PRESTRESSING STRANDS SHALL BE CUT FLUSH WITH END OF BEAM.
6. ¾" DIA. DRAIN (NON FERROUS MATERIAL) PLACED AT ALL 4 CORNERS OF EACH VOID. LOCATE TO AVOID PRESTRESSING STRANDS.
7. SEE TYPICAL END OF BEAM PLAN FOR STIRRUP SPACING.
8. HORIZONTAL SHEAR REINFORCEMENT EXTENDING FROM THE TOP OF THE BEAM INTO THE DECK OVERLAY SHALL BE PLACED AS SHOWN IN THE TYPICAL BEAM SECTIONS FOR BEAMS 2 TO 8. BEAM 1 SHALL HAVE AN ADDITIONAL LINE OF HORIZONTAL SHEAR REINFORCEMENT LOCATED SYMMETRICALLY ON THE OTHER SIDE OF THE BEAM.
9. ⊙ DENOTES MECHANICAL CONNECTORS FOR #5 BARS IN END OF BOX BEAM AND CURTAIN WALL.
10. TWO STRAIGHT STRANDS IN TOP OF BOX BEAM SHALL BE TENSIONED TO 2 KIPS EACH.
11. ESTIMATED BEAM WEIGHT = 159,000 LBS (INTERIOR) 163,000 LBS (EXTERIOR).
12. LEG LENGTHS FOR ALL #5 ⊓ @6" IN THE TOP FLANGE OF THE BOX BEAM SHALL BE THE SAME, AND SHALL PROVIDE THE 2'-6" MIN LAP WHERE LAPPED WITH #4 ⊔ FROM THE BOTTOM FLANGE.

PARSONS BRINCKERHOFF
650 ELM STREET
MANCHESTER, NH 03101

PROJECT NAME: LINCOLN
PROJECT NUMBER: BRF 0188 (8)

FILE NAME: z10l066boxbeaml.dgn
PROJECT LEADER: G.K. DONINGTON
DESIGNED BY: K JAMES
BOX BEAM DETAILS SHEET 1

PLOT DATE: 8-DEC-2014
DRAWN BY: W GERHOLD
CHECKED BY: A STOCKIN
SHEET 23 OF 62

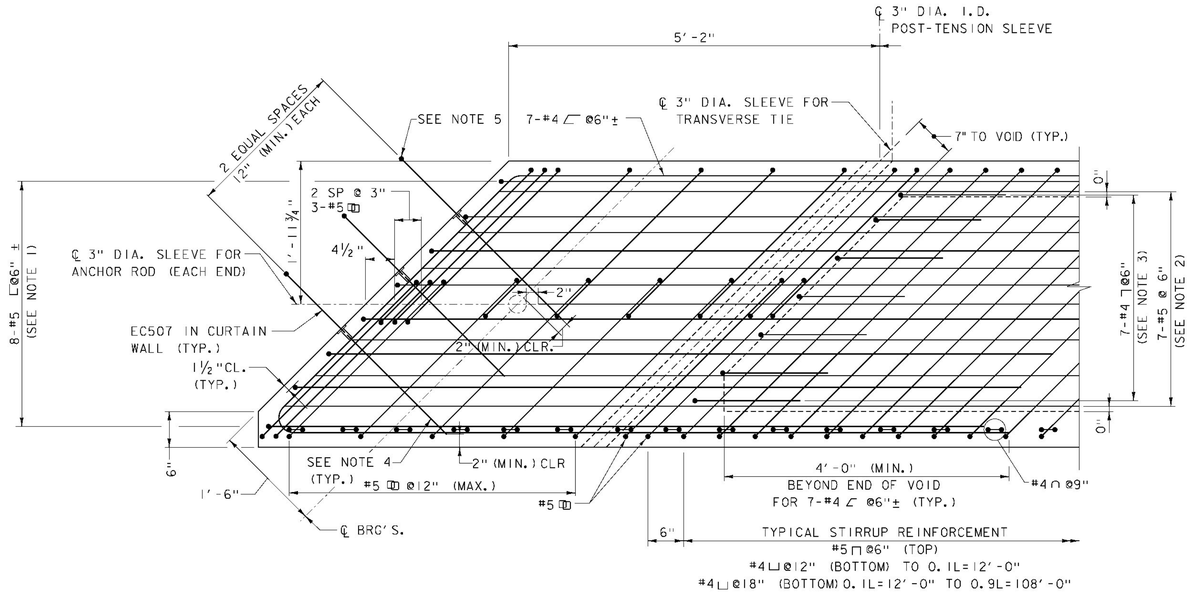


## TYPICAL END OF BEAM PLAN

SCALE: 1" = 1'-0"

NOTES:
1. FOR 8 - #5 ⌐ ⌀6"± AT END OF BOX BEAM, LEG LENGTH IN TOP FLANGE OF BOX BEAM SHALL BE 10'-0" MIN., AND LEG LENGTH IN BOTTOM FLANGE OF BOX BEAM SHALL BE 4'-0" MIN.
2. MINIMUM LAP LENGTH FOR #5 LONGITUDINAL BARS IN TOP FLANGE OF BOX BEAM SHALL BE 3'-8".
3. SEE DIAPHRAGM REINFORCING DETAILS FOR PLACEMENT OF 7-#4 ⌐ ⌀6" AT END OF BOX BEAM VOID.
4. PROVIDE MINIMUM BAR LENGTH OF 2'-0" IN ADDITION TO LENGTH OF CONNECTOR PORTION FOR #5 BARS WITH MECHANICAL CONNECTORS AT BEAM ENDS.
5. WHERE OBTUSE CORNER OF EXTERIOR BEAM IS LOCATED AT THE EXTERIOR BEAM FASCIA, THE THREE MECHANICAL CONNECTORS NEAREST THE BEAM FASCIA MAY BE OMITTED.

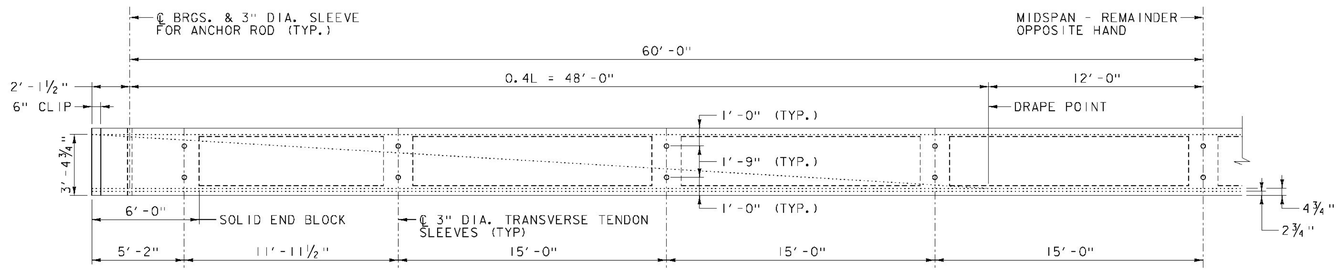


NOTE: REINFORCING OMITTED FOR CLARITY - SEE TYPICAL SECTIONS AND END OF BEAM PLAN FOR DETAILS.

## BOX BEAM STRAND DRAPING ELEVATION

SCALE: ¼" = 1'-0"

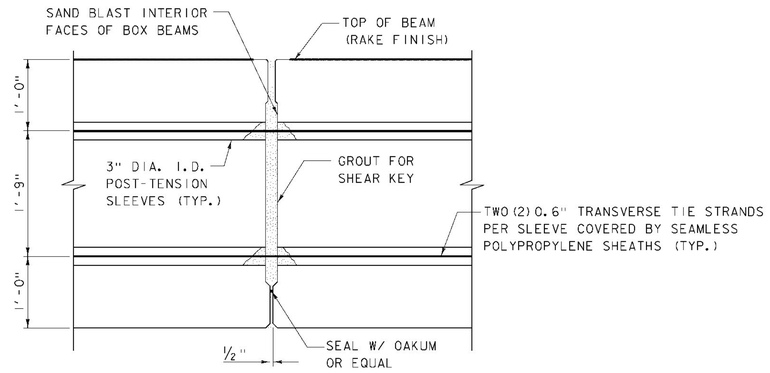


## TYPICAL LONGITUDINAL JOINT SECTION

SCALE: 1" = 1'-0"

## SERVICE LOADS PER BEAM

| | |
|---|---|
| BEAM SELF-WEIGHT MOMENT | 2118 k-ft |
| DECK OVERLAY DEAD LOAD MOMENT | 861 k-ft |
| SUPERIMPOSED DEAD LOAD MOMENT | 115 k-ft |
| FUTURE WEARING SURFACE (FWS) MOMENT | 196 k-ft |
| LIVE LOAD AND IMPACT MOMENT | 788 k-ft |

## MIDSPAN CAMBER TABLE

| | TRANSFER (IN) | MULT | ERECTION (IN) |
|---|---|---|---|
| PRESTRESSING | +5.94 | 1.80 | +10.7 |
| SELF WEIGHT | -4.43 | 1.85 | -8.2 |
| SUBTOTAL | +1.51 | | +2.5* |
| DECK | | | -1.5 |
| SUPERIMPOSED DEAD LOAD | | | -0.2 |
| SUBTOTAL | | | +0.8 |
| 2.5" FWS | | | -0.3 |
| TOTAL | | | +0.5 |

* MINIMUM ACTUAL MIDSPAN CAMBER SHALL BE AT LEAST +2.0" AT ERECTION.

PARSONS BRINCKERHOFF
650 ELM STREET
MANCHESTER, NH 03101

PROJECT NAME: LINCOLN
PROJECT NUMBER: BRF 0188 (8)

FILE NAME: z10j066boxbeam2.dgn
PROJECT LEADER: G.K. DONINGTON
DESIGNED BY: K JAMES
BOX BEAM DETAILS SHEET 2

PLOT DATE: 8-DEC-2014
DRAWN BY: W GERHOLD
CHECKED BY: A STOCKIN
SHEET 24 OF 62

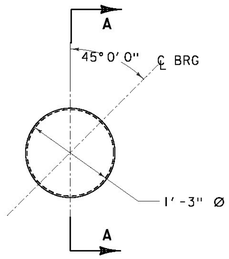


PLAN - BEARING PAD

SCALE: 1" = 1'-0"

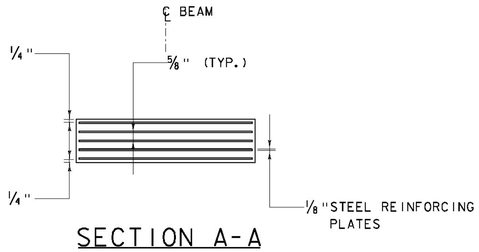


SECTION A-A

SCALE: 2" = 1'-0"

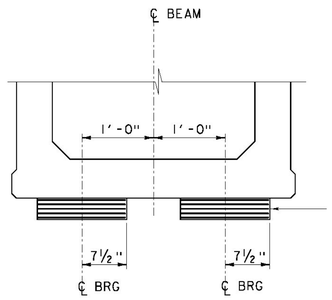


FRONT ELEVATION

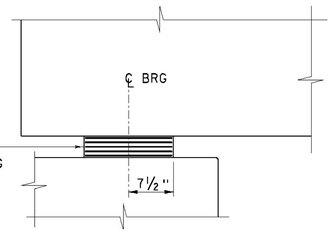


SIDE ELEVATION

ELASTOMERIC BEARING DETAILS

SCALE: 1" = 1'-0"

BEARING NOTES:

1. BEARINGS SHALL CONFORM TO THE APPLICABLE SUBSECTIONS OF STANDARD SPECIFICATIONS SECTIONS 531 AND 731.
2. ALL REINFORCEMENT BETWEEN LAYERS OF ELASTOMER SHALL BE STEEL MEETING THE REQUIREMENTS OF AASHTO M270/M270 GRADE 36. ALL INTERNAL STEEL PLATES SHALL BE SAND BLASTED AND FREE OF COATINGS, RUST AND MILL SCALE. THE PLATES SHALL BE FREE OF SHARP EDGES AND BURRS.
3. STEEL REINFORCED ELASTOMERIC BEARINGS SHALL HAVE A MINIMUM 1/4" EDGE SEAL OF ELASTOMER INTEGRAL WITH BEARING OVER ALL INTERNAL PLATES.
4. THE ELASTOMER SHALL BE 60 DUROMETER SHORE A.
5. THE ELASTOMER SHALL MEET THE REQUIREMENTS OF LOW TEMPERATURE ZONE D, GRADE 4
6. THE CONCRETE DIRECTLY UNDER THE BEARING DEVICE SHALL BE LEVEL.
7. THE CONTRACTOR IS ADVISED TO HAVE A MINIMUM OF 32 -1/4" X 16" X 16" GALVANIZED STEEL SHIMS AVAILABLE FOR USE FOR ELEVATION ADJUSTMENTS UPON THE SETTING OF THE SUPERSTRUCTURE UNITS. THE SHIMS SHALL BE FABRICATED ACCORDING TO SECTION 531 AND SHALL BE INCLUDED IN THE UNIT PRICE BID FOR CONTRACT ITEM 531.17.
8. ALL BEARINGS WERE DESIGNED PER AASHTO LRFD BRIDGE DESIGN SPECIFICATIONS 6TH EDITION AND ITS LATEST REVISIONS USING METHOD A.
9. SERVICE DESIGN LOADS FOR BEARINGS:
   - MAXIMUM VERTICAL LOAD = 104.7 KIPS
   - MINIMUM VERTICAL LOAD = 65.1 KIPS
   - MAXIMUM TRANSLATION = 0.60 INCHES
   - MAXIMUM ROTATION = 0.024 RADIANS

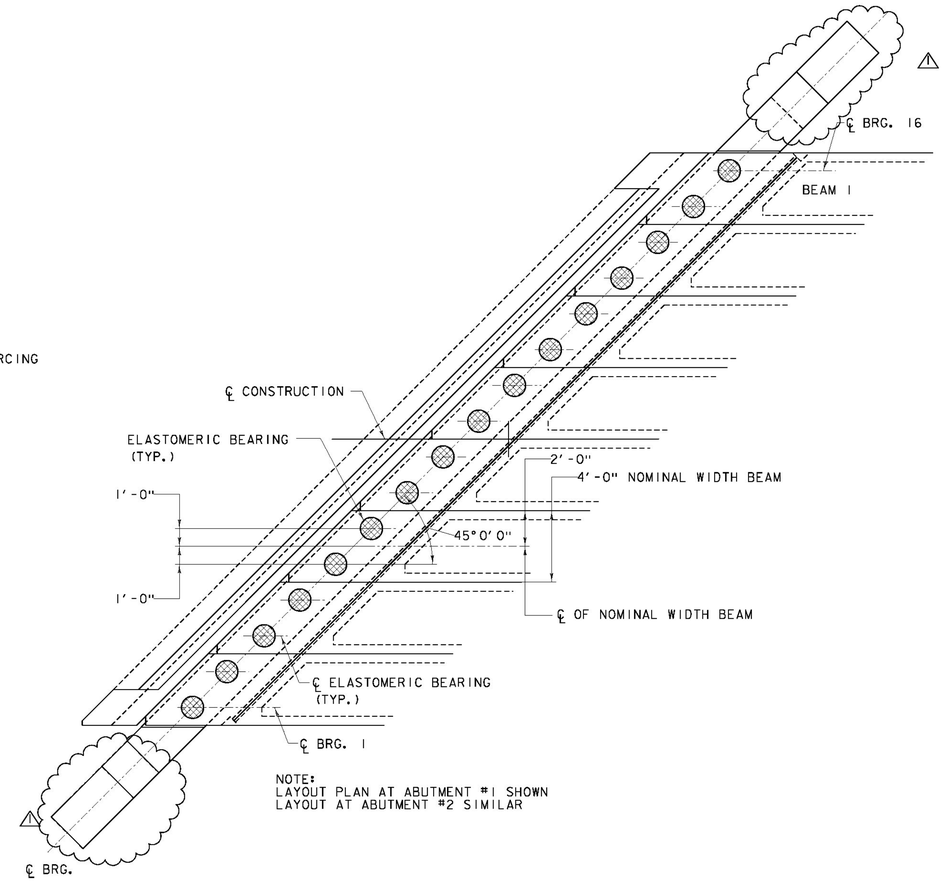


BEARING LAYOUT PLAN

SCALE: 1/4" = 1'-0"

⚠ REVISED PRECAST ABUTMENT CONNECTORS - 1/22/2015

PARSONS BRINCKERHOFF
650 ELM STREET
MANCHESTER, NH 03101

| | |
|---|---|
| PROJECT NAME: LINCOLN | |
| PROJECT NUMBER: BRF 0188 (8) | |
| FILE NAME: z10J066details.dgn | PLOT DATE: 8-DEC-2014 |
| PROJECT LEADER: G.K. DONINGTON | DRAWN BY: W GERHOLD |
| DESIGNED BY: K JAMES | CHECKED BY: A STOCKIN |
| ELASTOMERIC BEARING DETAILS | SHEET 25 OF 62 |

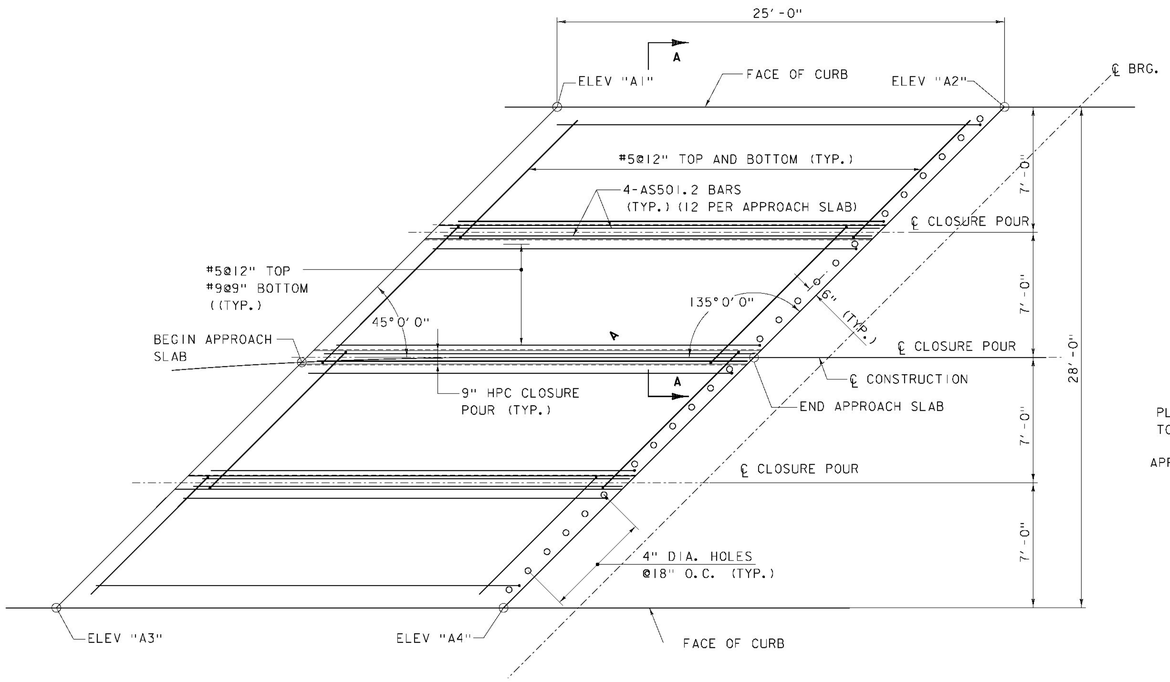


## APPROACH SLAB 1 - PLAN

SCALE: 1/4" = 1'-0"

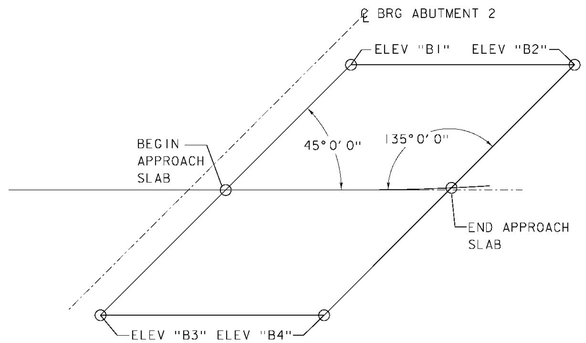


## APPROACH SLAB 2 - PLAN

SCALE: 1/8" = 1'-0"

| | STATION | OFFSET | ELEVATION |
|---|---|---|---|
| A1 | 503+07.17 | 14.00' LT | 998.62 |
| A2 | 503+32.17 | 14.00' LT | 998.87 |
| BEGIN AS 1 | 502+92.89 | 0.00' | 998.76 |
| END AS 1 | 503+18.16 | 0.00' | 999.01 |
| A3 | 502+77.72 | 12.60' RT | 998.35 |
| A4 | 503+04.16 | 14.00' RT | 998.59 |
| B1 | 504+60.53 | 14.00' LT | 1000.15 |
| B2 | 504+86.95 | 12.68' LT | 1000.44 |
| BEGIN AS 2 | 504+46.53 | 0.00' | 1000.29 |
| END AS 2 | 504+71.78 | 0.00' | 1000.54 |
| B3 | 504+32.53 | 14.00' RT | 999.87 |
| B4 | 504+57.53 | 14.00' RT | 1000.12 |

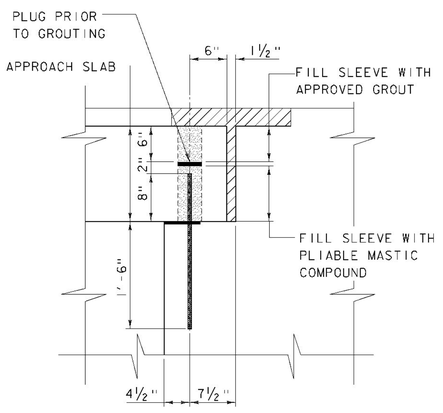


## APPROACH SLAB DOWEL DETAIL

SCALE: 1" = 1'-0"

NOTE:
THE APPROACH SLAB DOWELS SHALL BE CAST INTO THE CURTAIN WALL APPROACH SLAB SEAT. THE BOTTOM LENGTH OF THE SLEEVE WITHIN THE APPROACH SLAB SHALL BE FILLED WITH A PLIABLE MASTIC COMPOUND. THE UPPER PORTION SHALL BE PLUGGED AND THEN FILLED WITH AN APPROVED GROUT. ALL COSTS ASSOCIATED WITH THIS WORK SHALL BE INCLUDED IN THE UNIT PRICE BID FOR ITEM 540.10 PRECAST CONCRETE STRUCTURE (APPROACH SLAB #1) OR (APPROACH SLAB #2) AS APPROPRIATE.

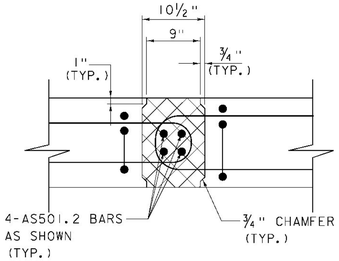


## JOINT DETAIL SECTION

SCALE: 1" = 1'-0"

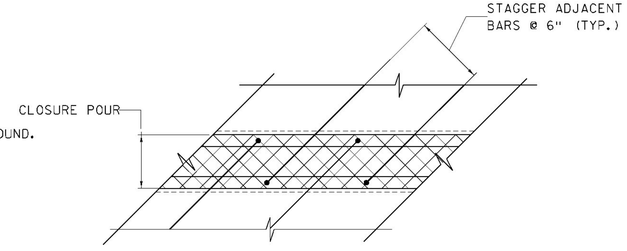


## JOINT DETAIL PLAN

SCALE: 1" = 1'-0"

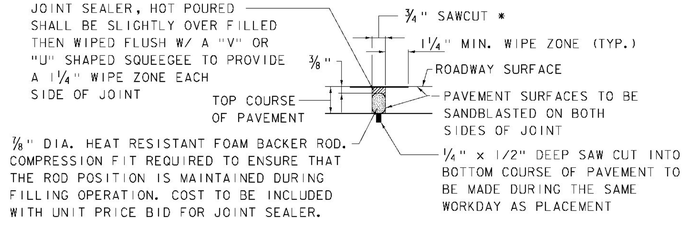


## SAWED PAVEMENT JOINT DETAIL

SCALE: 3" = 1'-0"

* JOINT IS TO BE LOCATED ACCURATELY BY STRING LINING, OR OTHER MEANS, PRIOR TO PAVING, SO THAT THE SAW CUTS WILL BE MADE DIRECTLY OVER THE END OF THE CONCRETE APPROACH SLAB. JOINT SHALL BE CUT DRY IN SINGLE PASS AND BE SEALED WITHIN 24 HOURS OR PRIOR TO EXPOSURE TO TRAFFIC. JOINT SHALL BE CLEANED PRIOR TO APPLYING THE JOINT SEALER.

## LEGEND

SPECIAL PROVISION
(HIGH PERFORMANCE CONCRETE, (RAPID SET) (FPO)

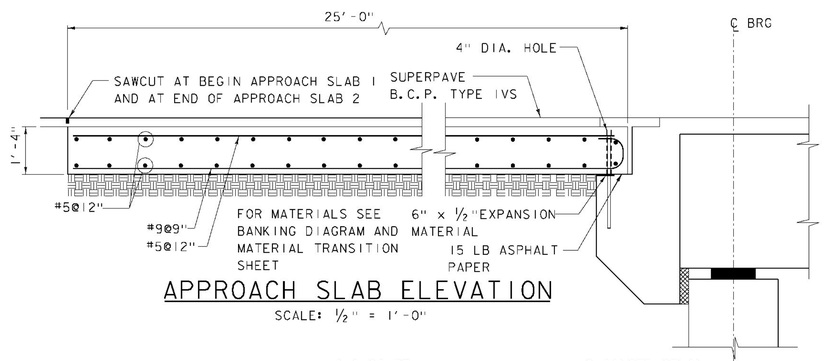


## APPROACH SLAB ELEVATION

SCALE: ½" = 1'-0"

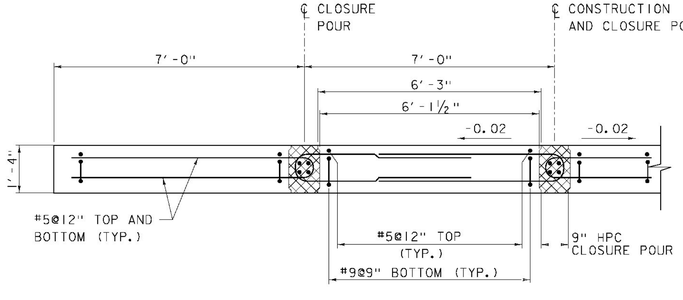


## SECTION A-A

SCALE: ½" = 1'-0"

PARSONS BRINCKERHOFF
650 ELM STREET
MANCHESTER, NH 03101

PROJECT NAME: LINCOLN
PROJECT NUMBER: BRF 0188 (8)

FILE NAME: z10J066appslab.dgn
PROJECT LEADER: G.K. DONINGTON
DESIGNED BY: K JAMES
APPROACH SLAB DETAILS

PLOT DATE: 8-DEC-2014
DRAWN BY: W GERHOLD
CHECKED BY: R GAUDREAU
SHEET 26 OF 62

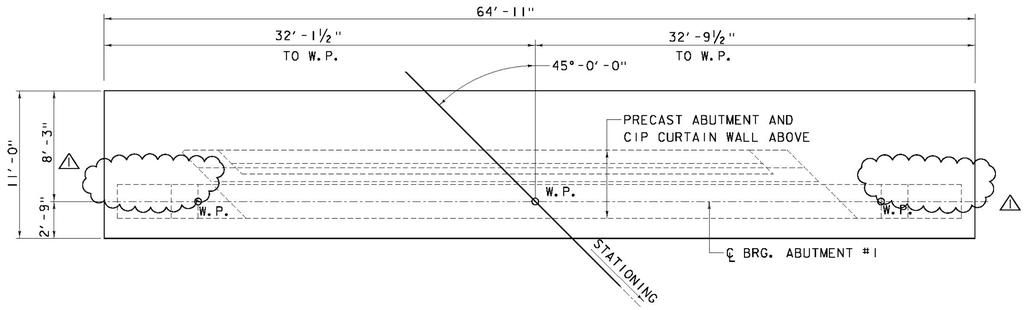


## ABUTMENT #1 PLAN CAST-IN-PLACE FOOTING MASONRY

SCALE: 3/16" = 1'-0"

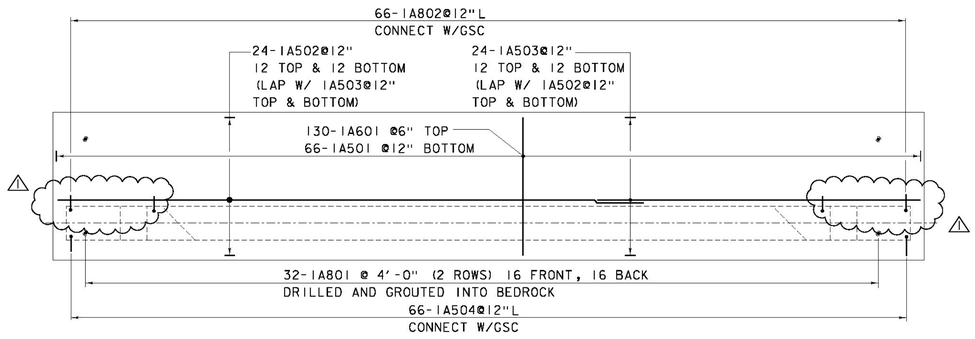


## ABUTMENT #1 PLAN CAST-IN-PLACE FOOTING REINFORCING

SCALE: 3/16" = 1'-0"

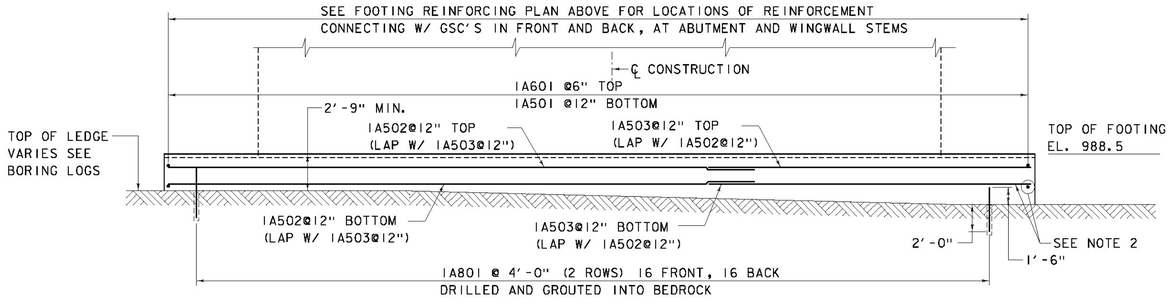


## ABUTMENT #1 CAST-IN-PLACE FOOTING ELEVATION

SCALE: 3/16" = 1'-0"

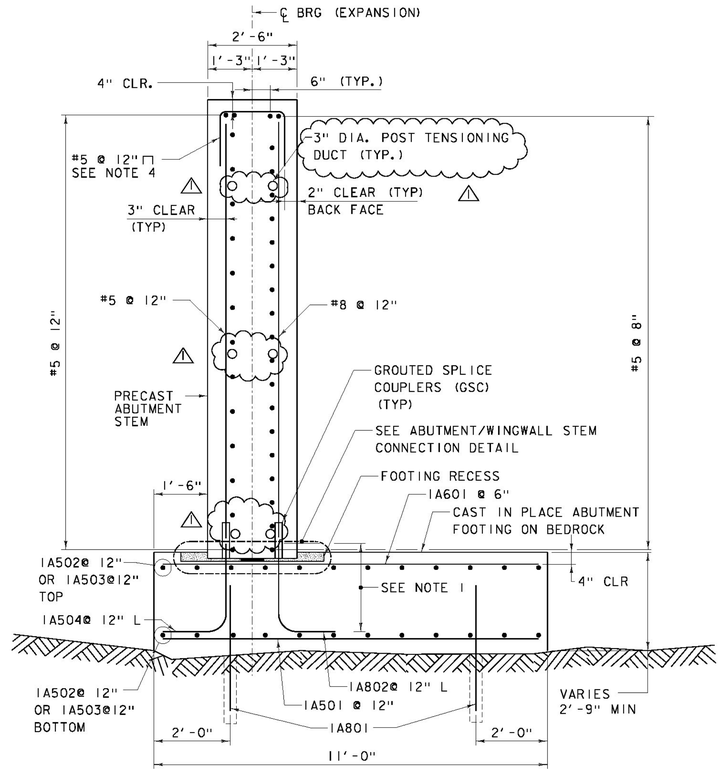


## TYPICAL ABUTMENT SECTION

SCALE: ½" = 1'-0"

NOTES:
1. LEG LENGTH SHALL MEET THE REQUIREMENTS OF THE GROUTED SPLICE COUPLERS. DIMENSION IN REBAR SCHEDULE FOR ESTIMATING PURPOSES ONLY.
2. BOTTOM LAYER OF ABUTMENT FOOTING REINFORCEMENT SHALL BE PLACED BASED ON THEORETICAL 2'-9" THICKNESS.
3. THE TOP OF THE FOOTING ELEVATION FOR ABUTMENT 1 WAS SET BASED ON THE BEDROCK ELEVATIONS DETERMINED FROM BORINGS B-105 AND B-106. ACTUAL BEDROCK ELEVATIONS WILL VARY.
4. REINFORCEMENT IN TOP OF ABUTMENT SHALL BE CENTERED ABOUT THE ANCHOR RODS SO THAT NO REINFORCEMENT IS DAMAGED DURING CORING OF THE ANCHOR ROD HOLES.
5. MINIMUM SPLICE LENGTH FOR HORIZONTAL #5 BARS SHALL BE 3'-9" FOR EPOXY COATED BARS AND 3'-1" FOR BLACK BARS.

⚠ REVISED PRECAST ABUTMENT CONNECTORS - 1/22/2015

PROJECT NAME: LINCOLN
PROJECT NUMBER: BRF 0188 (8)

PARSONS BRINCKERHOFF
650 ELM STREET
MANCHESTER, NH 03101

FILE NAME: z10J066sub4.dgn
PROJECT LEADER: K DONINGTON
DESIGNED BY: K JAMES
ABUTMENT 1 FOOTING PLAN

PLOT DATE: 8-DEC-2014
DRAWN BY: W GERHOLD
CHECKED BY: R GAUDREAU
SHEET 27 OF 62

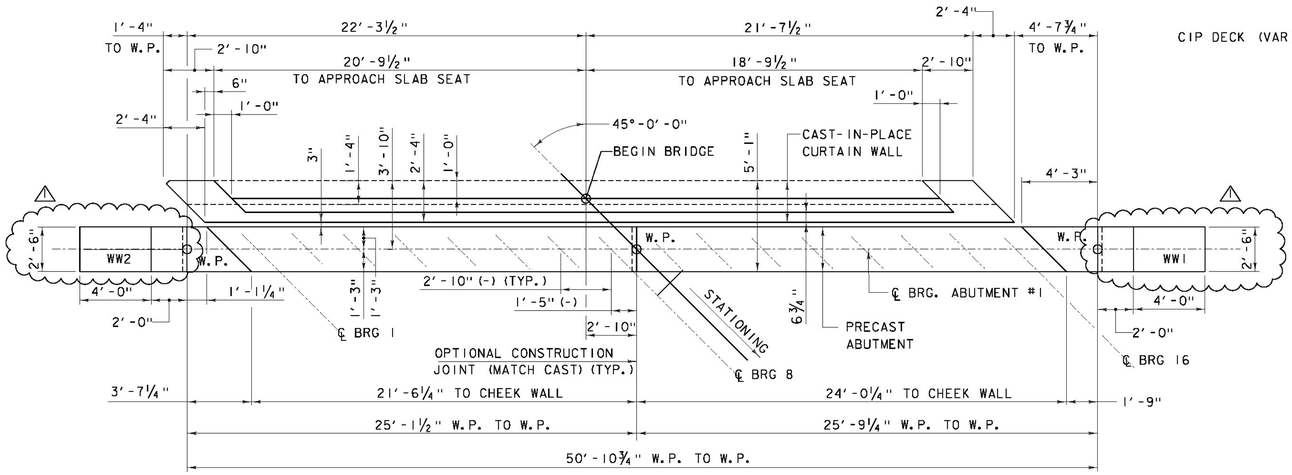


## ABUTMENT #1 PLAN (PCU 1)

SCALE: ¼" = 1'-0"

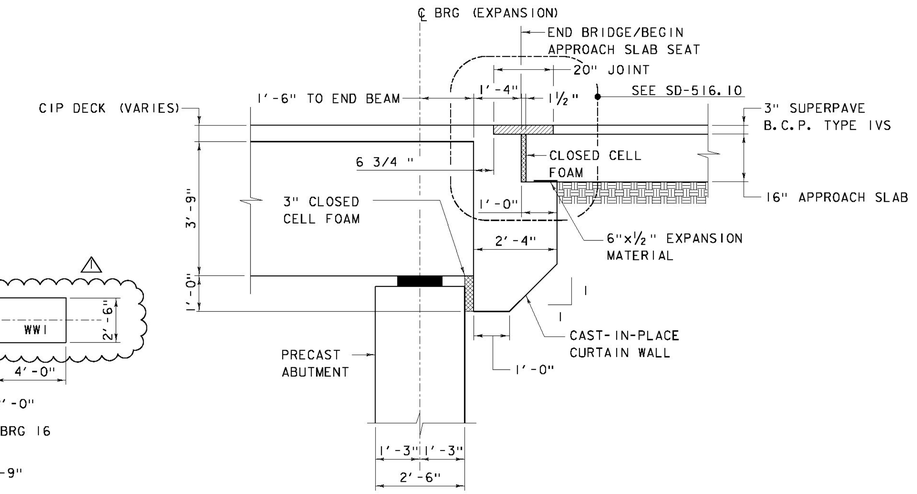


## TYPICAL END DETAIL

SCALE: ½" = 1'-0"

## ELEVATIONS

SEE NOTE 2

| | | | |
|---|---|---|---|
| ELEV "A" | 999.45 | ELEV "H" | 999.01 |
| ELEV "B" | 994.25 | ELEV "I" | 994.60 |
| ELEV "C" | 988.50 | ELEV "J" | 994.28 |
| ELEV "D" | 994.44 | ELEV "K" | 997.67 |
| ELEV "E" | 988.50 | ELEV "L" | 997.53 |
| ELEV "F" | 993.75 | ELEV "M" | 997.25 |
| ELEV "G" | 999.81 | | |

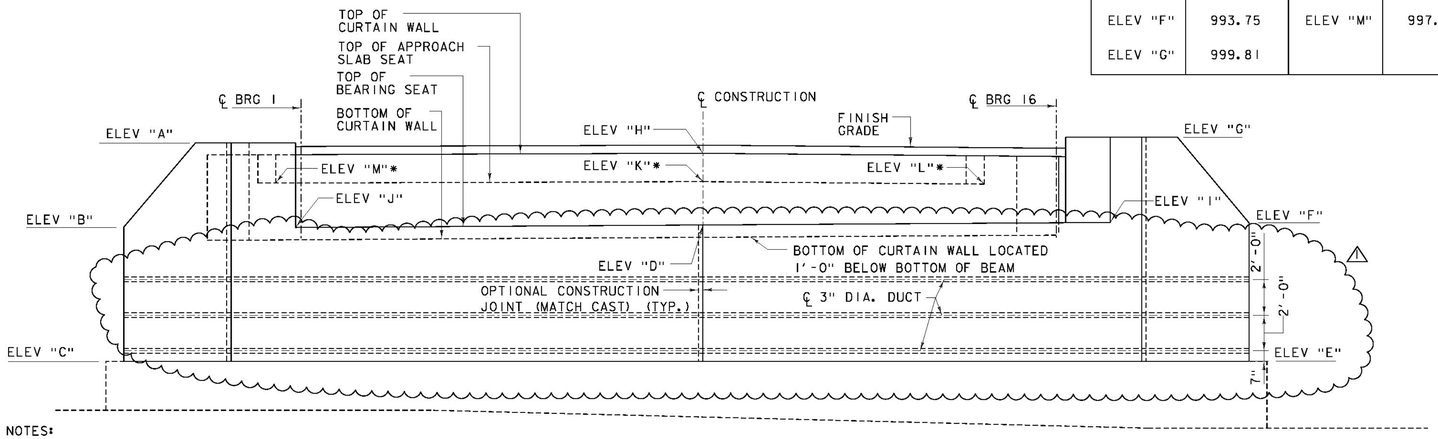


NOTES:
1) LEVEL TOP OF BEARING SEAT LOCALLY AT BEARING PAD LOCATIONS. SEE BEARING SEAT ELEVATION TABLE
2) ELEVATIONS TAKEN AT ℄ BEARINGS WITH EXCEPTION OF: *APPROACH SLAB SEAT ELEVATIONS TAKEN AT ℄ OF BRACKET. ELEVATION "H" TAKEN AT BEGIN BRIDGE STATION.

## ABUTMENT #1 ELEVATION (PCU 1)

SCALE: ¼" = 1'-0"

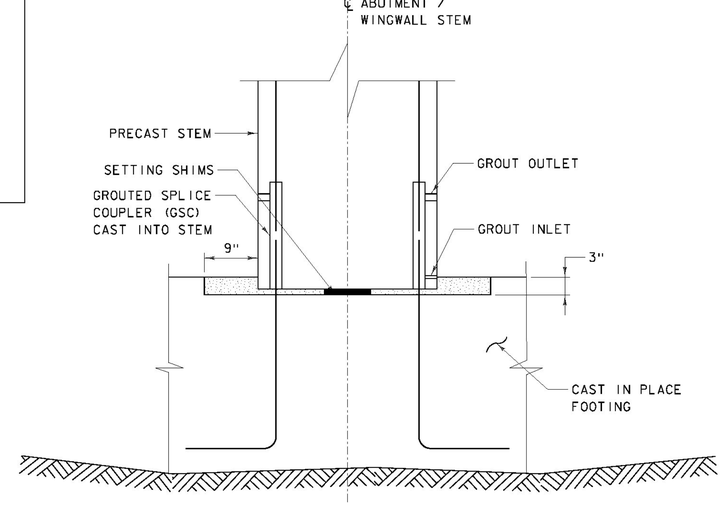


## ABUTMENT/WINGWALL STEM CONNECTION DETAIL

SCALE: 1" = 1'-0"

## BEARING SEAT ELEVATION TABLE

| Bearing | 1 | 2 | 3 | 4 | 5 | 6 | 7 | 8 | 9 | 10 | 11 | 12 | 13 | 14 | 15 | 16 |
|---|---|---|---|---|---|---|---|---|---|---|---|---|---|---|---|---|
| Elevation | 994.29 | 994.31 | 994.33 | 994.35 | 994.37 | 994.39 | 994.41 | 994.43 | 994.45 | 994.47 | 994.49 | 994.51 | 994.53 | 994.55 | 994.57 | 994.59 |

⚠ REVISED PRECAST ABUTMENT CONNECTORS - 1/22/2015

PARSONS BRINCKERHOFF
650 ELM STREET
MANCHESTER, NH 03101

PROJECT NAME: LINCOLN
PROJECT NUMBER: BRF 0188 (8)

FILE NAME: z10j066sub4.dgn
PROJECT LEADER: K DONINGTON
DESIGNED BY: K JAMES
ABUTMENT I PLAN

PLOT DATE: 8-DEC-2014
DRAWN BY: W GERHOLD
CHECKED BY: R GAUDREAU
SHEET 28 OF 62

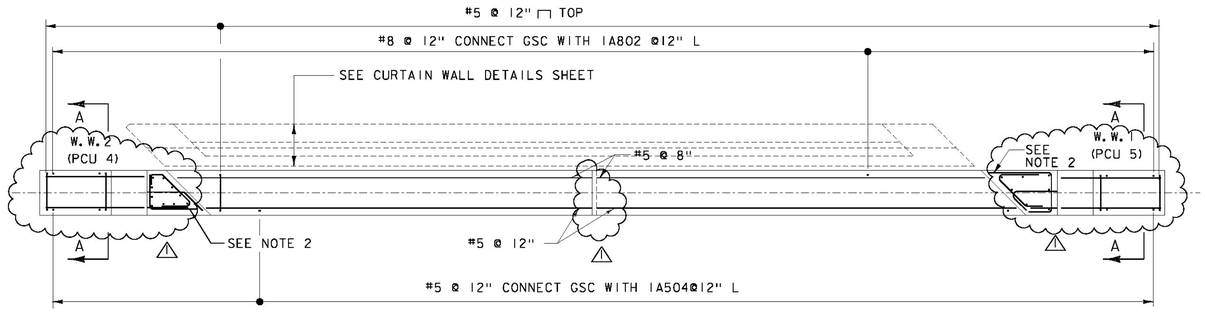


## ABUTMENT #1 REINFORCING PLAN (PCU 1)

SCALE: 1/4" = 1'-0"

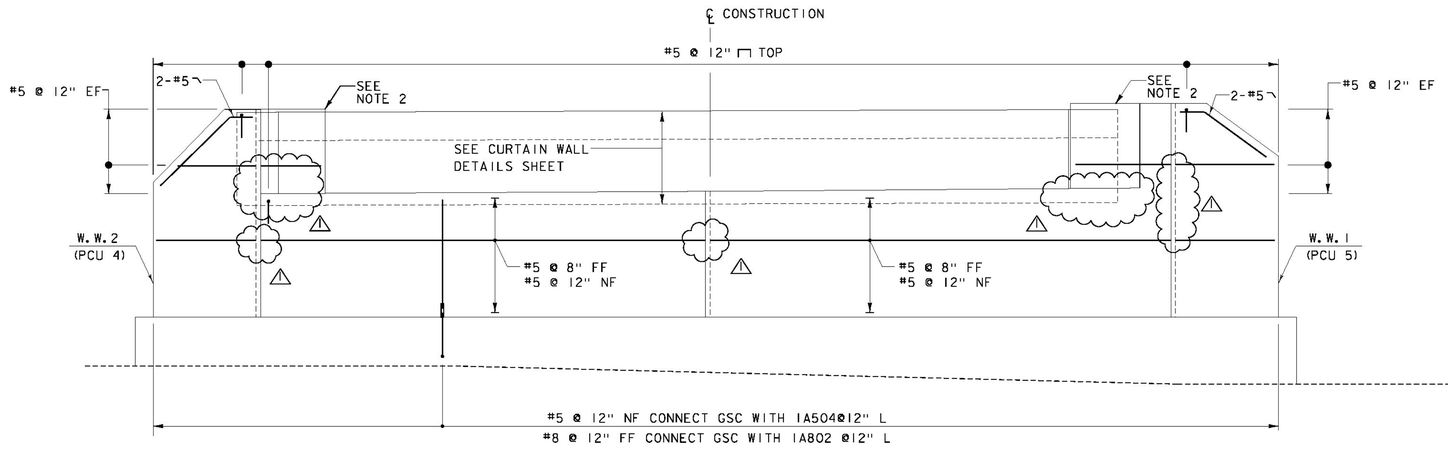


## ABUTMENT #1 REINFORCING ELEVATION (PCU 1)

(POST TENSIONING DUCTS NOT SHOWN FOR CLARITY)
SCALE: 1/4" = 1'-0"

PRECAST ABUTMENTS AND POST-TENSIONING

1. POST-TENSIONING AND ASSOCIATED ITEMS ARE ONLY REQUIRED IF THE PRECAST ABUTMENT IS CONSTRUCTED OF MORE THAN ONE UNIT. ANY POST-TENSIONING STRANDS AND CONDUIT SHALL ADHERE TO THE REQUIREMENTS OF SECTION 510 PRESTRESSED CONCRETE. GALVANIZED ANCHOR ASSEMBLIES, CONDUIT, AND POST-TENSIONING STRANDS SHALL BE INCLUDED UNDER THE APPROPRIATE PRECAST CONCRETE ABUTMENT PAY ITEM. POST-TENSIONING STRANDS SHALL BE COVERED WITH A SEAMLESS POLYPROPYLENE SHEATH (WITH CORROSION INHIBITOR GREASE BETWEEN SHEATH AND STRAND) FOR THE LENGTH OF THE STRAND, EXCEPT AT ANCHORAGE LOCATIONS.
2. GALVANIZE ANCHOR ASSEMBLIES AFTER FABRICATION ACCORDING TO AASHTO M232M/M232.
3. DESIGN VALUES:
   A. CONCRETE COMPRESSIVE STRENGTH: fc': 5,000 PSI.
   B. POST-TENSIONING STRANDS: 0.5 INCH DIAMETER, 270 KSI, LOW RELAXATION 7-WIRE STRANDS.
   C. ASSUMED MODULUS OF ELASTICITY IS 28,500 KSI.
   D. THERE SHALL BE TWO STRANDS PER CONDUIT.
   E. JACKING FORCE PER STRAND: 32 KIPS
4. MORTAR FOR EXTERIOR POCKETS SHALL BE THE SAME COLOR AND TEXTURE AS THE ABUTMENT/WINGWALL CONCRETE.
5. OTHER ANCHORAGE SYSTEMS MAY BE SUBSTITUTED WITH THE APPROVAL OF THE ENGINEER. ALTERNATE ANCHORAGE SYSTEMS SHALL BE WATER TIGHT AND CORROSION PROOF.
6. GROUT SPLICE COUPLERS AFTER INSTALLATION OF ALL POST-TENSIONING STRANDS.
7. INSTALL POST-TENSIONING STRANDS AT WW4 AFTER INSTALLATION OF ALL ABUTMENT 2 POST-TENSIONING STRANDS.
8. PROPOSED SEQUENCE OF CONSTRUCTION:
   A. PLACE PRECAST ABUTMENTS AND INSTALL POST-TENSIONING STRANDS (IF MORE THAN ONE UNIT IS USED).
   B. APPLY EPOXY BONDING COMPOUND TO MATCH CAST FACES OF VERTICAL CONSTRUCTION JOINT.
   C. USE A CALIBRATED JACK TO TENSION TO 3 KIPS TO REMOVE SAG IN STRANDS.
   D. CHECK ALIGNMENT OF PRECAST ABUTMENT ELEMENTS.
   E. STRESS POST-TENSIONING STRANDS USING A CALIBRATED JACK.
9. ALTERNATE SEQUENCE OF CONSTRUCTION MAY BE SUBMITTED TO THE VTRANS PROJECT MANAGER FOR APPROVAL.

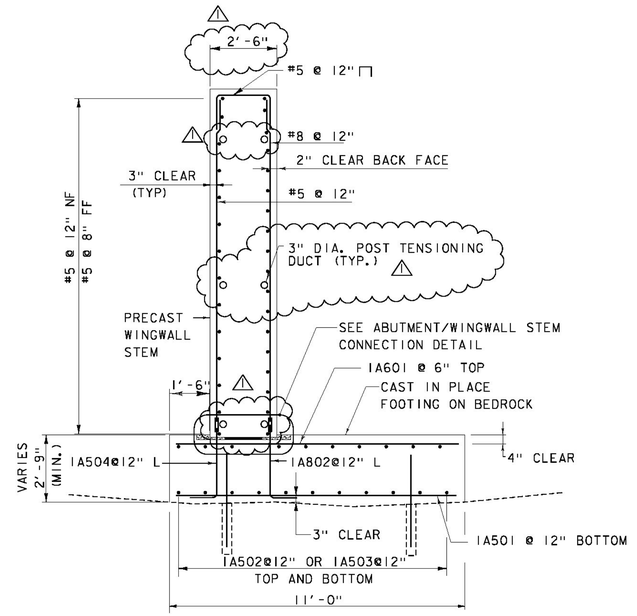


## SECTION A-A (W.W. 1 AND W.W. 2 SECTION)

SCALE: 3/8" = 1'-0"

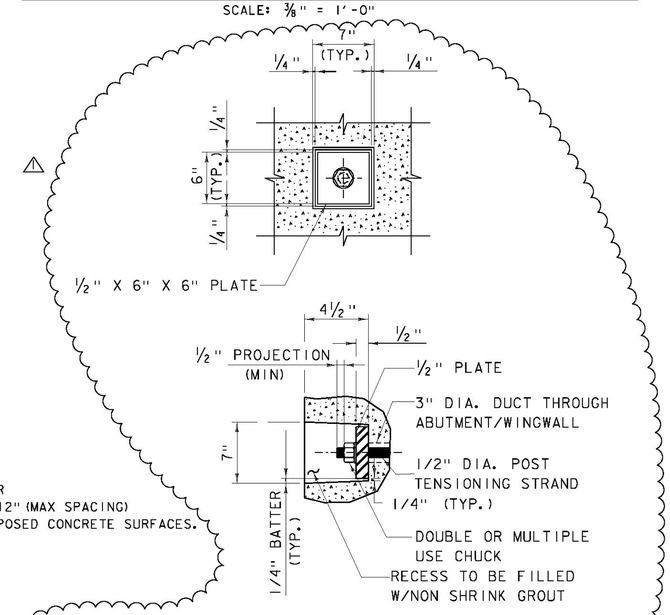


## POST-TENSIONING TENDON DETAIL

NOT TO SCALE

NOTES:
1. NF = NEAR FACE
   FF = FAR FACE
   EF = EACH FACE
   GSC = GROUTED SPLICE COUPLER
2. CHEEKWALLS SHALL HAVE A #5@12" (MAX SPACING) REINFORCING GRID FOR ALL EXPOSED CONCRETE SURFACES.

⚠ REVISED PRECAST ABUTMENT CONNECTORS - 1/22/2015

PROJECT NAME: LINCOLN
PROJECT NUMBER: BRF 0188 (8)

PARSONS BRINCKERHOFF
650 ELM STREET
MANCHESTER, NH 03101

FILE NAME: z10J066sub4.dgn
PROJECT LEADER: K DONINGTON
DESIGNED BY: K JAMES
ABUTMENT 1 REINFORCEMENT PLAN

PLOT DATE: 8-DEC-2014
DRAWN BY: W GERHOLD
CHECKED BY: R GAUDREAU
SHEET 29 OF 62

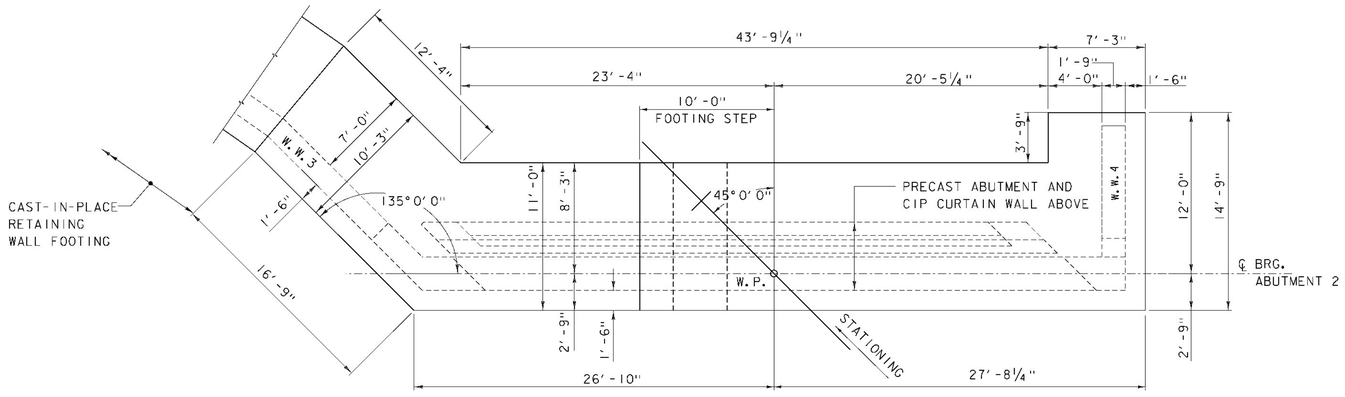


## ABUTMENT #2 PLAN CAST-IN-PLACE FOOTING MASONRY

SCALE: 3/16" = 1'-0"

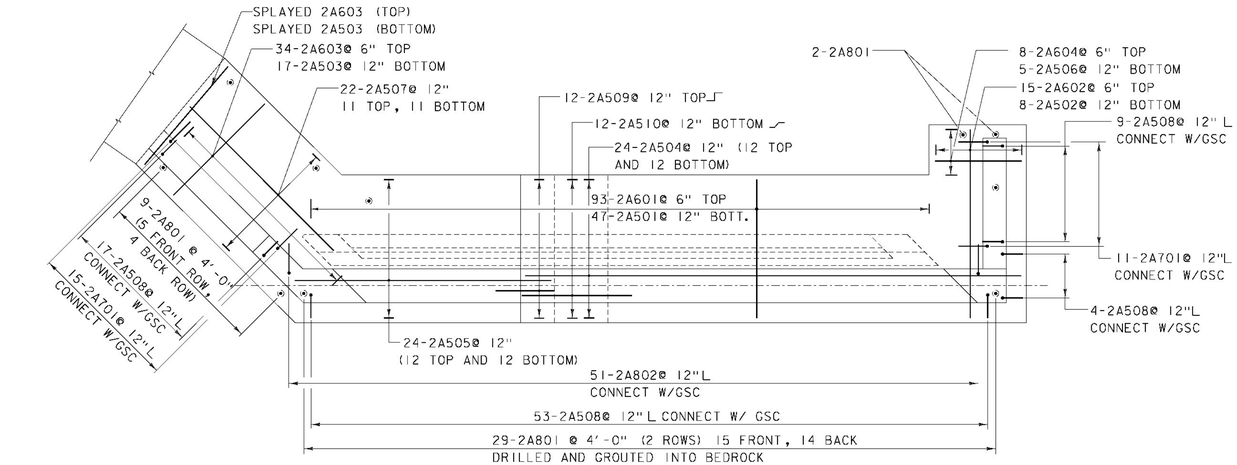


## ABUTMENT #2 PLAN CAST-IN-PLACE FOOTING REINFORCING

SCALE: 3/16" = 1'-0"

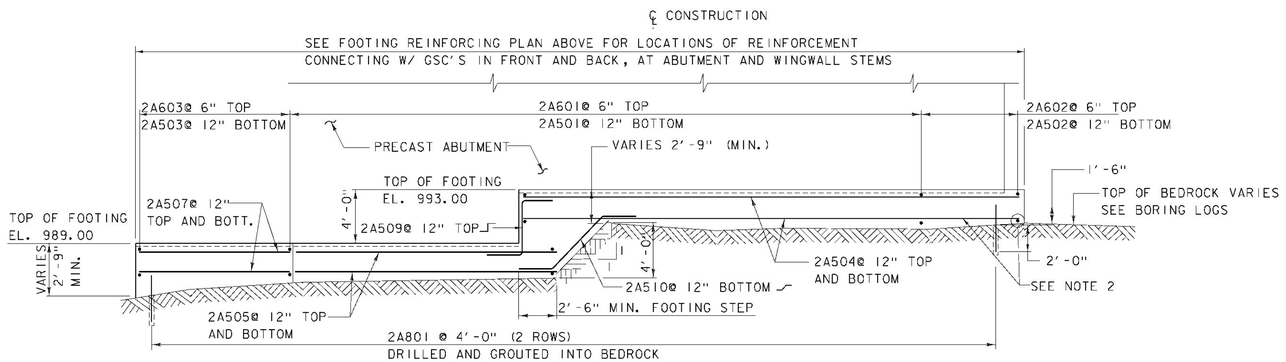


## ABUTMENT #2 CAST-IN-PLACE FOOTING ELEVATION

SCALE: 3/16" = 1'-0"

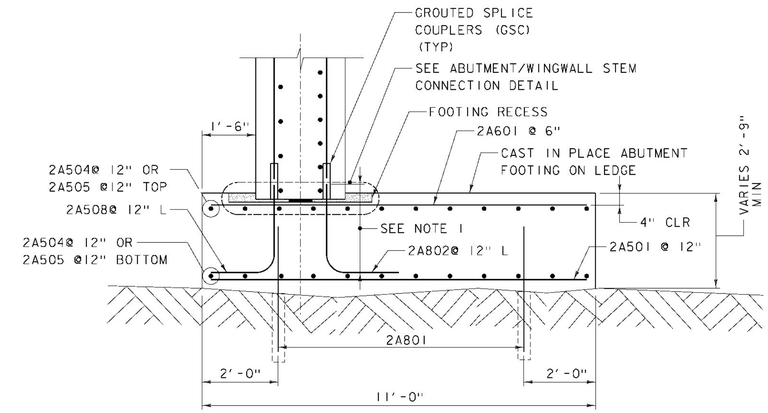


## ABUTMENT #2 FOOTING SECTION

SCALE: ½" = 1'-0"

NOTES:

1. LEG LENGTH SHALL MEET THE REQUIREMENTS OF THE GROUTED SPLICE COUPLERS. DIMENSION IN REBAR SCHEDULE IS FOR ESTIMATING PURPOSES ONLY.
2. BOTTOM LAYER OF ABUTMENT FOOTING REINFORCEMENT SHALL BE PLACED BASED ON THEORETICAL 2'-9" THICKNESS.
3. THE TOP OF THE FOOTING ELEVATIONS FOR ABUTMENT 2 WERE SET BASED ON THE BEDROCK ELEVATIONS DETERMINED FROM BORINGS B-103 AND B-104. ACTUAL BEDROCK ELEVATIONS WILL VARY.
4. REINFORCEMENT IN TOP OF ABUTMENT SHALL BE CENTERED ABOUT THE ANCHOR RODS SO THAT NO REINFORCEMENT IS DAMAGED DURING CORING OF THE ANCHOR ROD HOLES.
5. MINIMUM SPLICE LENGTH FOR HORIZONTAL #5 BARS SHALL BE 3'-9" FOR EPOXY COATED BARS AND 3'-1" FOR BLACK BARS.

PARSONS BRINCKERHOFF
650 ELM STREET
MANCHESTER, NH 03101

PROJECT NAME: LINCOLN

PROJECT NUMBER: BRF 0188 (8)

FILE NAME: z10J066sub2.dgn
PROJECT LEADER: G.K.DONINGTON
DESIGNED BY: K. JAMES
ABUTMENT 2 FOOTING PLAN

PLOT DATE: 8-DEC-2014
DRAWN BY: W GERHOLD
CHECKED BY: R GAUDREAU
SHEET 30 OF 62

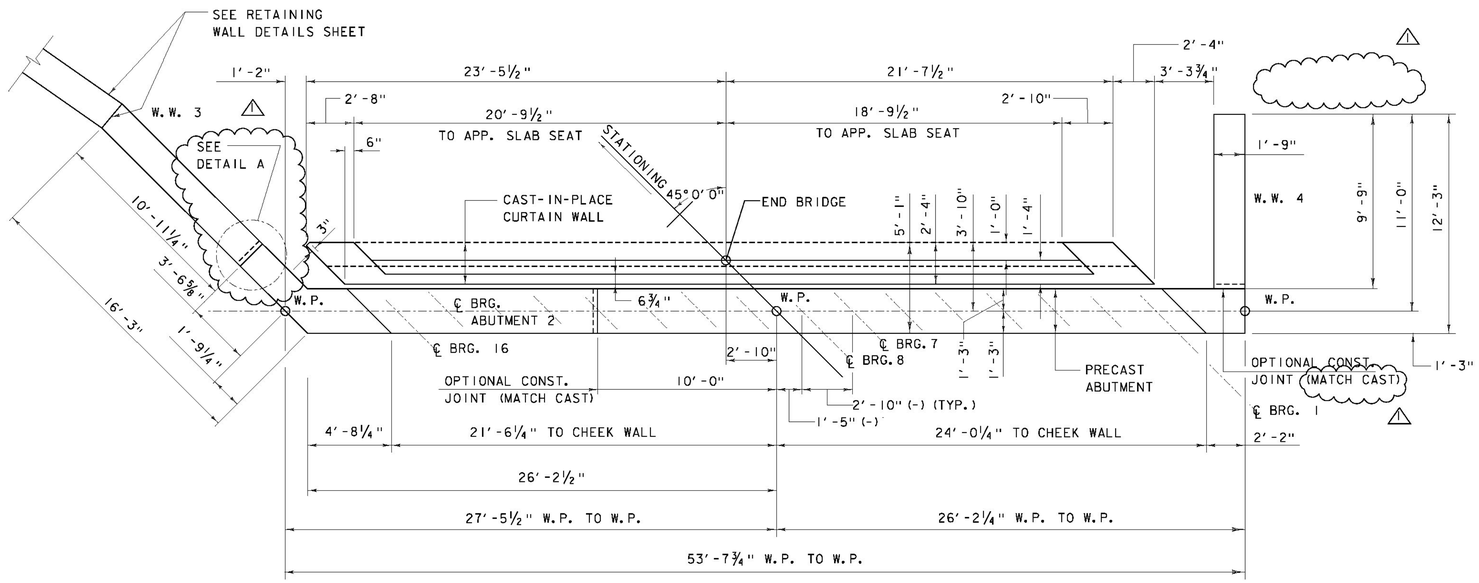


## ABUTMENT #2 PLAN (PCU 6)

SCALE: 1/4" = 1'-0"

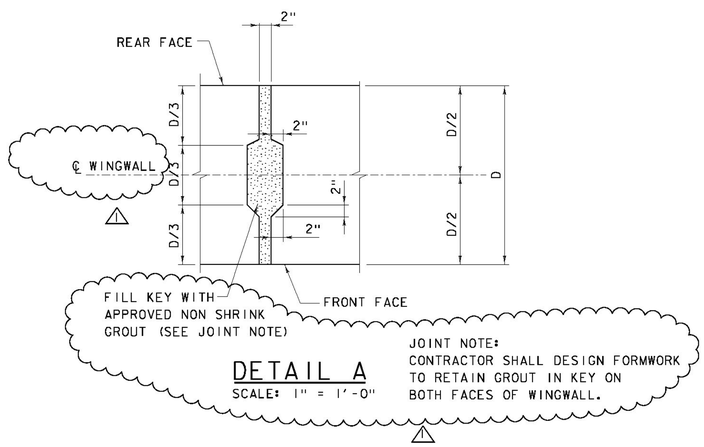


## DETAIL A

SCALE: 1" = 1'-0"

## ELEVATIONS

SEE NOTE 2

| | | | |
|---|---|---|---|
| ELEV "A" | 1000.98 | ELEV "G" | 995.64 |
| ELEV "B" | 995.80 | ELEV "H" | 1000.29 |
| ELEV "C" | 989.00 | ELEV "I" | 998.96 |
| ELEV "D" | 1000.66 | ELEV "J" | 998.54 |
| ELEV "E" | 993.00 | ELEV "K" | 998.82 |
| ELEV "F" | 995.48 | | |

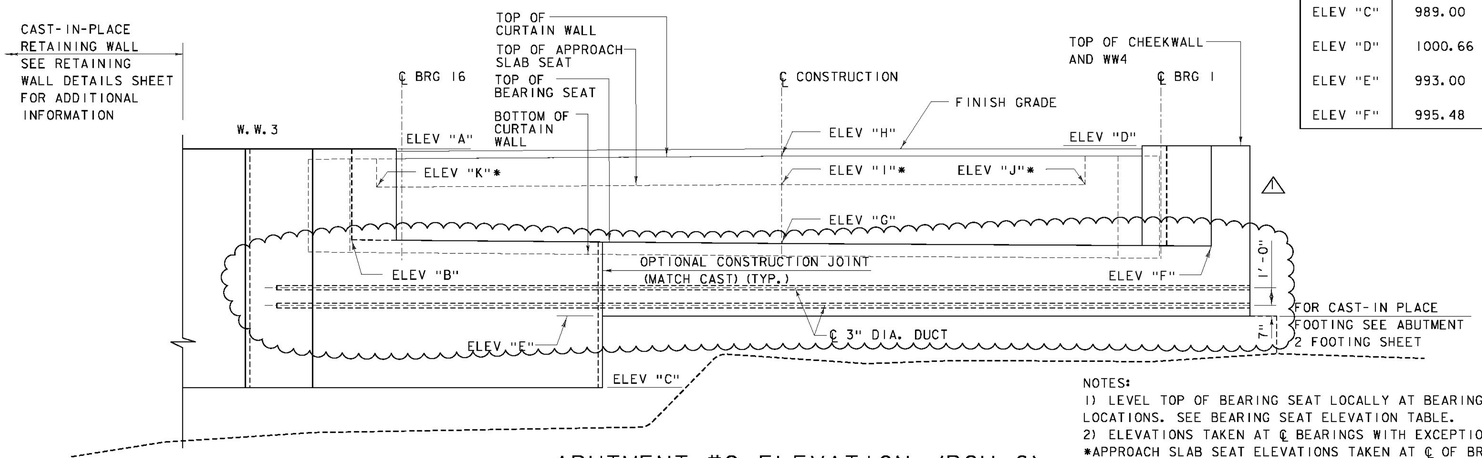


## ABUTMENT #2 ELEVATION (PCU 6)

SCALE: 1/4" = 1'-0"

NOTES:
1) LEVEL TOP OF BEARING SEAT LOCALLY AT BEARING PAD LOCATIONS. SEE BEARING SEAT ELEVATION TABLE.
2) ELEVATIONS TAKEN AT ℄ BEARINGS WITH EXCEPTION OF:
*APPROACH SLAB SEAT ELEVATIONS TAKEN AT ℄ OF BRACKET.
ELEVATION "H" TAKEN AT END BRIDGE STATION.

## BEARING SEAT ELEVATION TABLE

| Bearing | 1 | 2 | 3 | 4 | 5 | 6 | 7 | 8 | 9 | 10 | 11 | 12 | 13 | 14 | 15 | 16 |
|---|---|---|---|---|---|---|---|---|---|---|---|---|---|---|---|---|
| Elevation | 995.49 | 995.51 | 995.53 | 995.55 | 995.57 | 995.59 | 995.61 | 995.63 | 995.65 | 995.67 | 995.69 | 995.71 | 995.73 | 995.75 | 995.77 | 995.79 |

⚠ REVISED PRECAST ABUTMENT CONNECTORS - 1/22/2015

PARSONS BRINCKERHOFF
650 ELM STREET
MANCHESTER, NH 03101

PROJECT NAME: LINCOLN
PROJECT NUMBER: BRF 0188 (8)

FILE NAME: z10J066sub2.dgn
PROJECT LEADER: G.K.DONINGTON
DESIGNED BY: K. JAMES
ABUTMENT 2 PLAN

PLOT DATE: 8-DEC-2014
DRAWN BY: W GERHOLD
CHECKED BY: R GAUDREAU
SHEET 31 OF 62

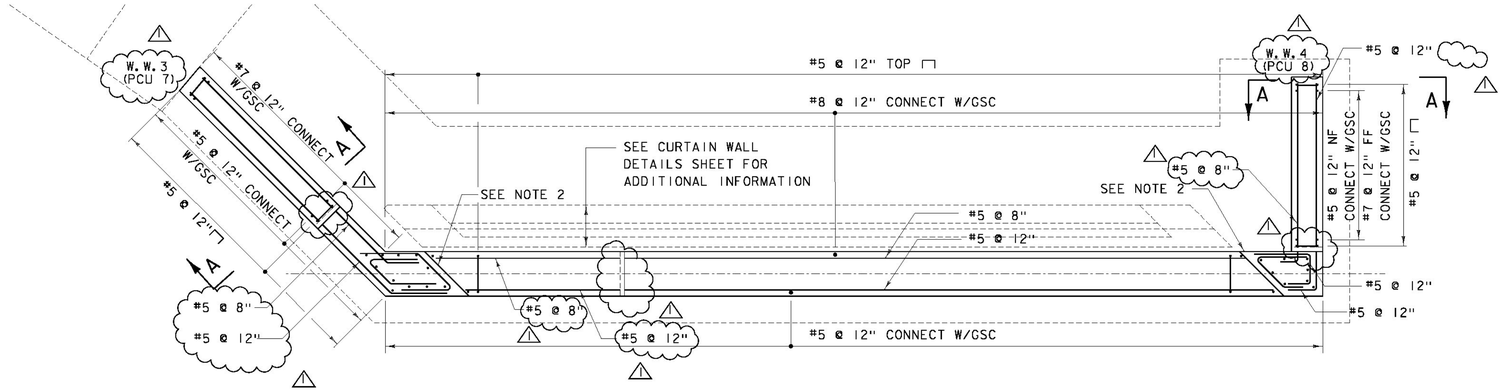


## ABUTMENT #2 REINFORCING PLAN (PCU 6)

SCALE: 1/4" = 1'-0"

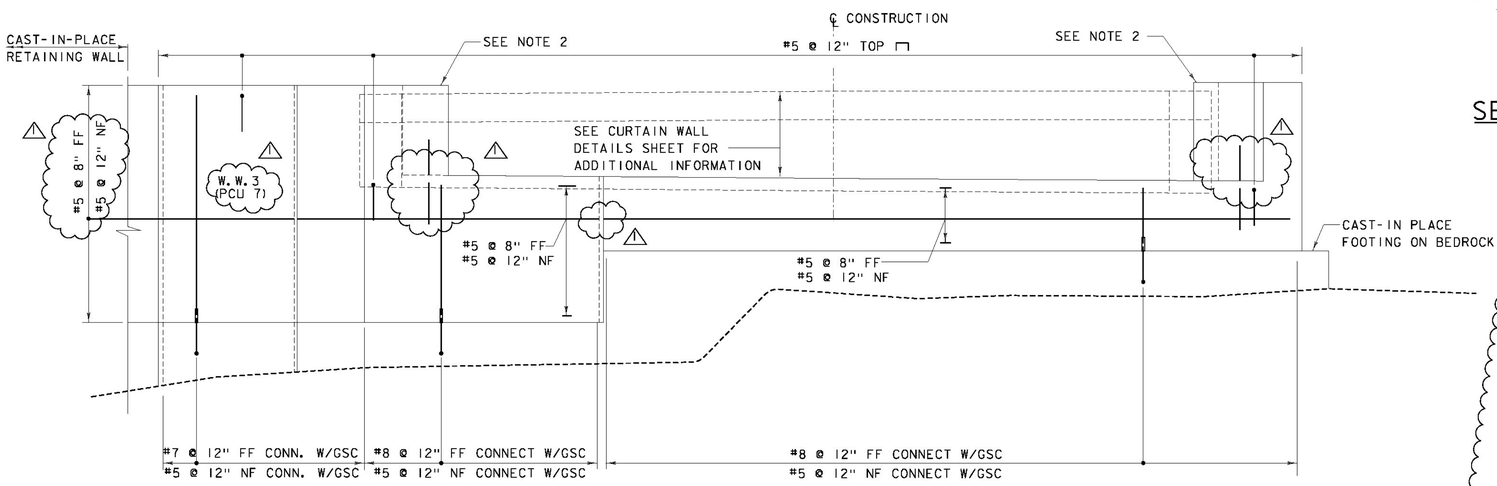


## ABUTMENT #2 REINFORCING ELEVATION (PCU 6)

(POST-TENSIONING DUCTS NOT SHOWN FOR CLARITY)
SCALE: 1/4" = 1'-0"

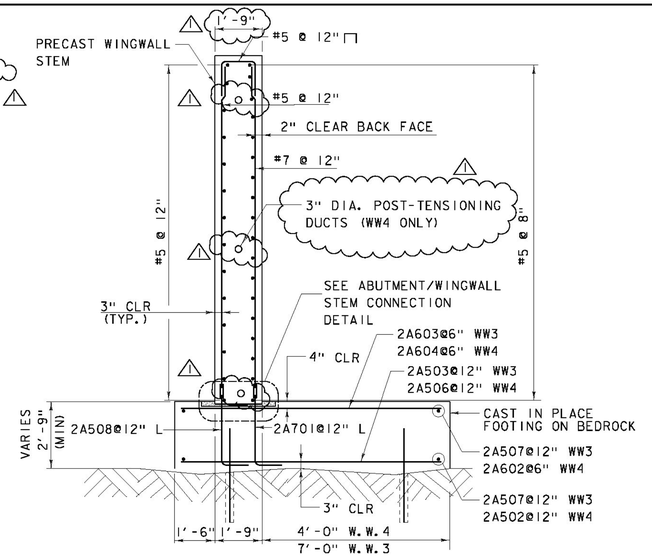


## SECTION A-A (W.W.3 AND W.W.4 SECTION)

SCALE: 3/4" = 1'-0"

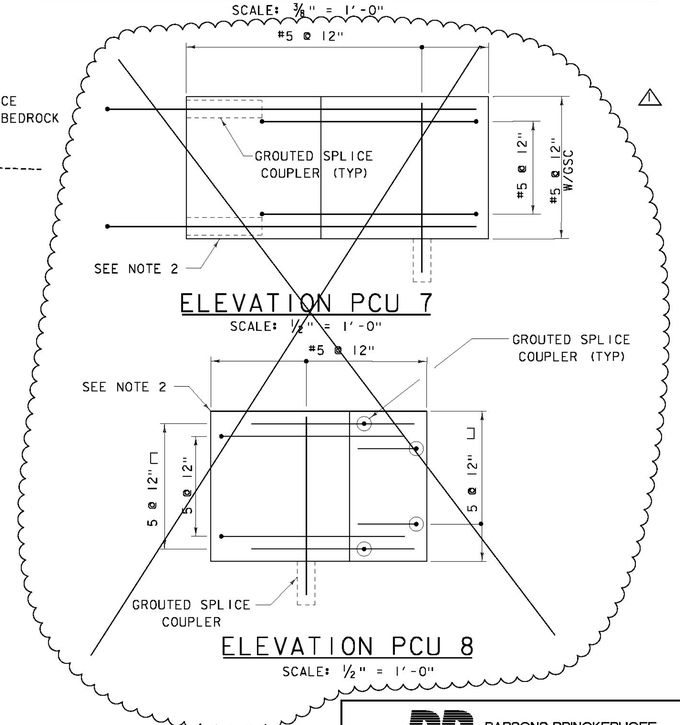


## ELEVATION PCU 7

SCALE: 1/2" = 1'-0"

## ELEVATION PCU 8

SCALE: 1/2" = 1'-0"

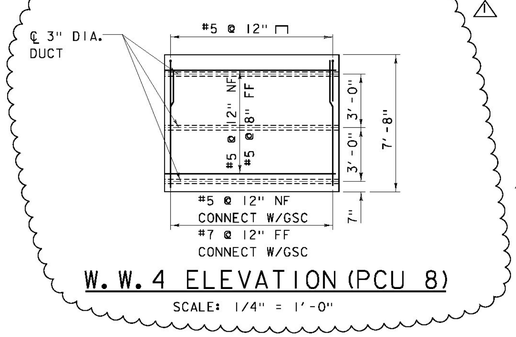


## W.W. 4 ELEVATION (PCU 8)

SCALE: 1/4" = 1'-0"

NOTES:

1. N.F. = NEAR FACE
   F.F. = FAR FACE
   E.F. = EACH FACE
   GSC = GROUTED SPLICE COUPLER
2. CHEEKWALLS SHALL HAVE A#5 @ 12" (MAX. SPACING) REINFORCING GRID FOR ALL EXPOSED CONCRETE SURFACES.

⚠ REVISED PRECAST ABUTMENT CONNECTORS - 1/22/2015

PARSONS BRINCKERHOFF
650 ELM STREET
MANCHESTER, NH 03101

PROJECT NAME: LINCOLN
PROJECT NUMBER: BRF 0188 (8)

FILE NAME: z10J066sub2.dgn
PROJECT LEADER: G.K.DONINGTON
DESIGNED BY: K. JAMES
ABUTMENT 2 REINFORCEMENT PLAN

PLOT DATE: 8-DEC-2014
DRAWN BY: W GERHOLD
CHECKED BY: R GAUDREAU
SHEET 32 OF 62

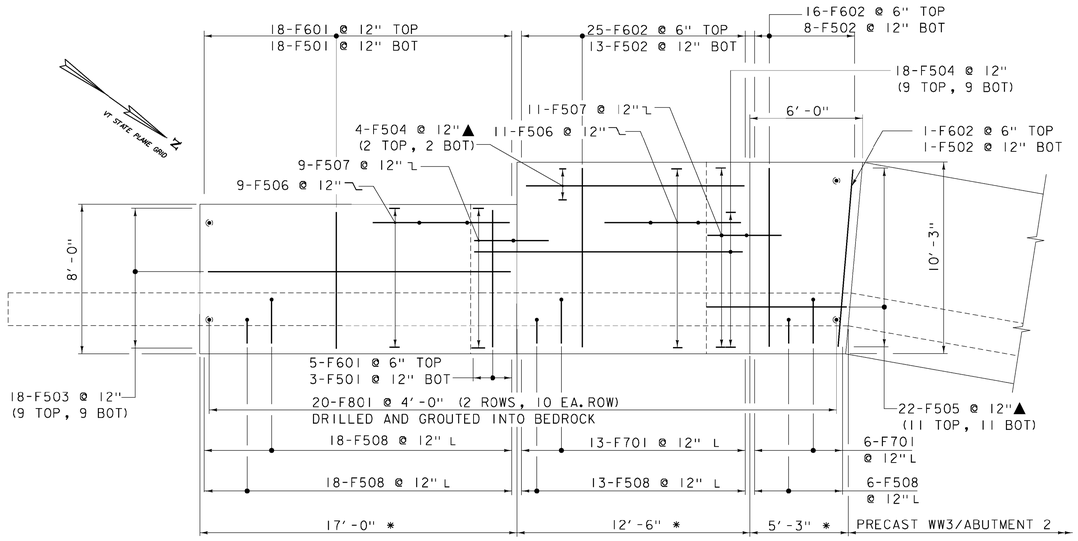


## FOOTING PLAN - CAST-IN-PLACE RETAINING WALL

SCALE: 1/4" = 1'-0"

* DIMENSIONS TAKEN ALONG FACE OF WALL

NOTES:

1. BARS IN WINGWALL STEM EXTENSION SHALL BE FABRICATED AT MAXIMUM REQUIRED LENGTH AND SHALL BE CUT TO FIT IN THE FIELD AS REQUIRED.

2. WINGWALL STEM EXTENSION SHALL BE CAST DIRECTLY ON BEDROCK. BEDROCK PROFILES VARYING SUBSTANTIALLY FROM THAT SHOWN SHALL BE DISCUSSED WITH AND ANY MODIFICATIONS SHALL BE APPROVED BY RESIDENT ENGINEER PRIOR TO PLACEMENT OF WINGWALL STEM EXTENSION.

3. PRECAST W.W.3 SHALL BE PLACED PRIOR TO PLACING CONCRETE IN ADJACENT CAST-IN-PLACE RETAINING WALL.

4. N.F.= NEAR FACE, F.F.= FAR FACE, E.F.= EACH FACE
▲ = CUT TO FIT IN FIELD.

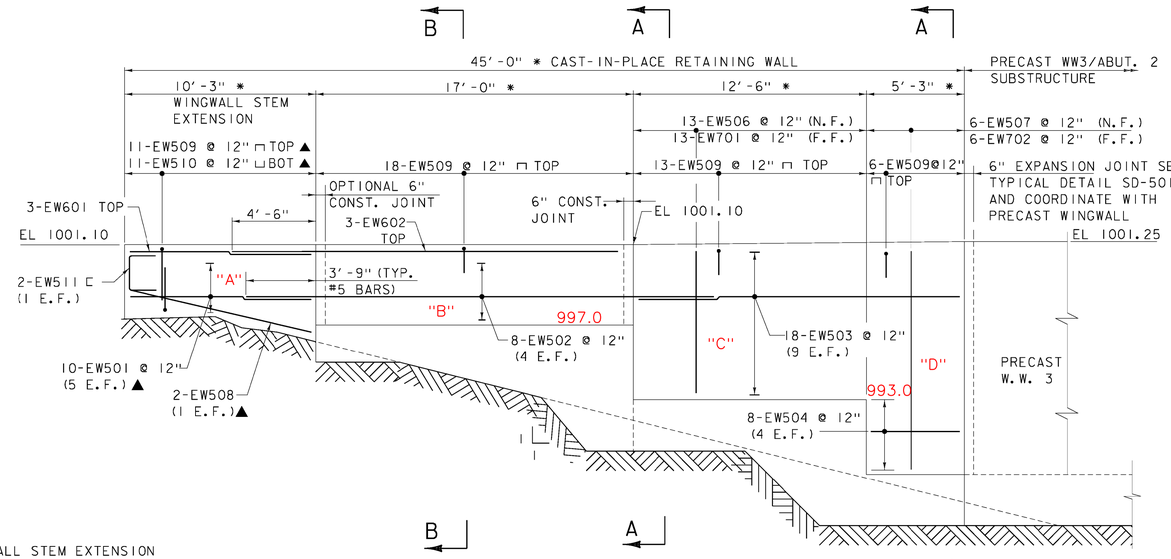


## ELEVATION - CAST-IN-PLACE RETAINING WALL

SCALE: 1/4" = 1'-0"

* DIMENSIONS TAKEN ALONG FACE OF WALL

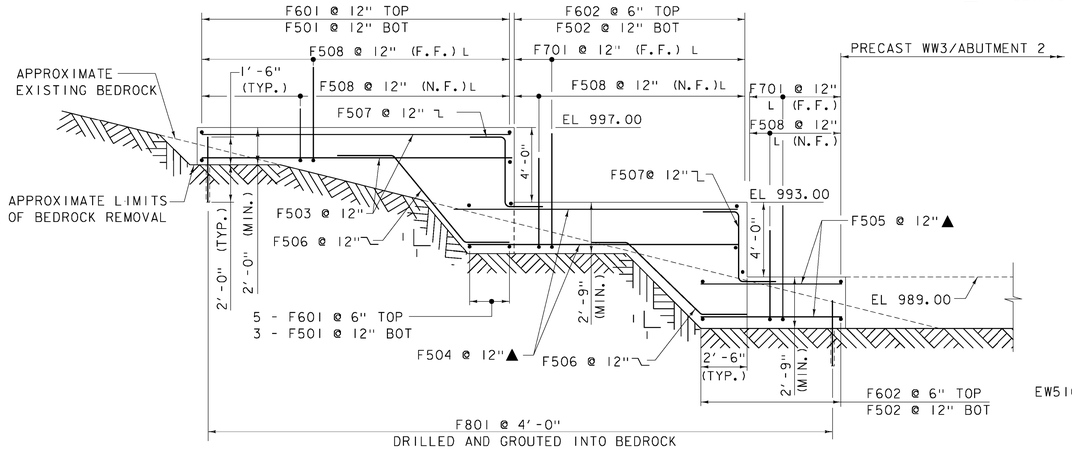


## FOOTING ELEVATION - CAST-IN-PLACE RETAINING WALL

SCALE: 1/4" = 1'-0"

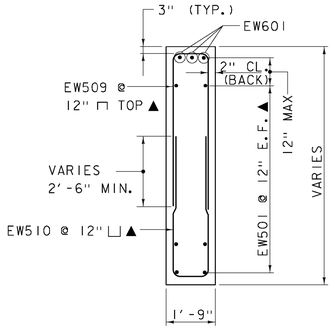


## WINGWALL STEM EXTENSION TYPICAL SECTION

SCALE: 3/8" = 1'-0"

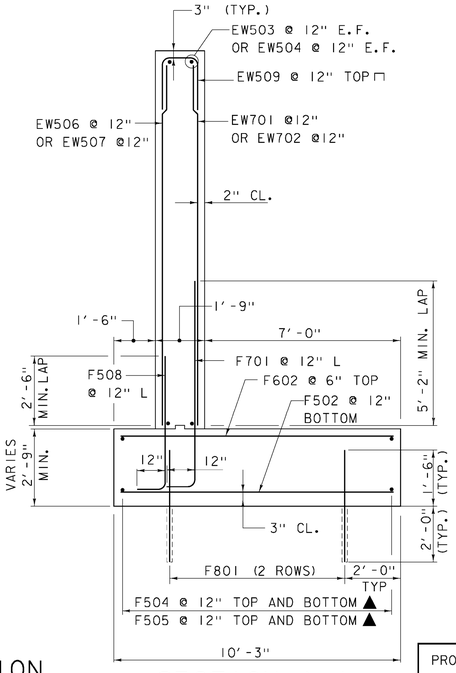


## SECTION A-A

SCALE: 3/8" = 1'-0"

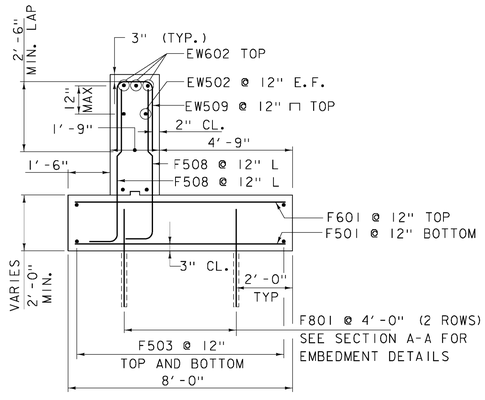


## SECTION B-B

SCALE: 3/8" = 1'-0"

PARSONS BRINCKERHOFF
650 ELM STREET
MANCHESTER, NH 03101

PROJECT NAME: LINCOLN

PROJECT NUMBER: BRF 0188 (8)

FILE NAME: z10j066sub.dgn
PROJECT LEADER: G.K. DONINGTON
DESIGNED BY: R GAUDREAU
RETAINING WALL DETAILS SHEET

PLOT DATE: 8-DEC-2014
DRAWN BY: W GERHOLD
CHECKED BY: K JAMES
SHEET 33 OF 62

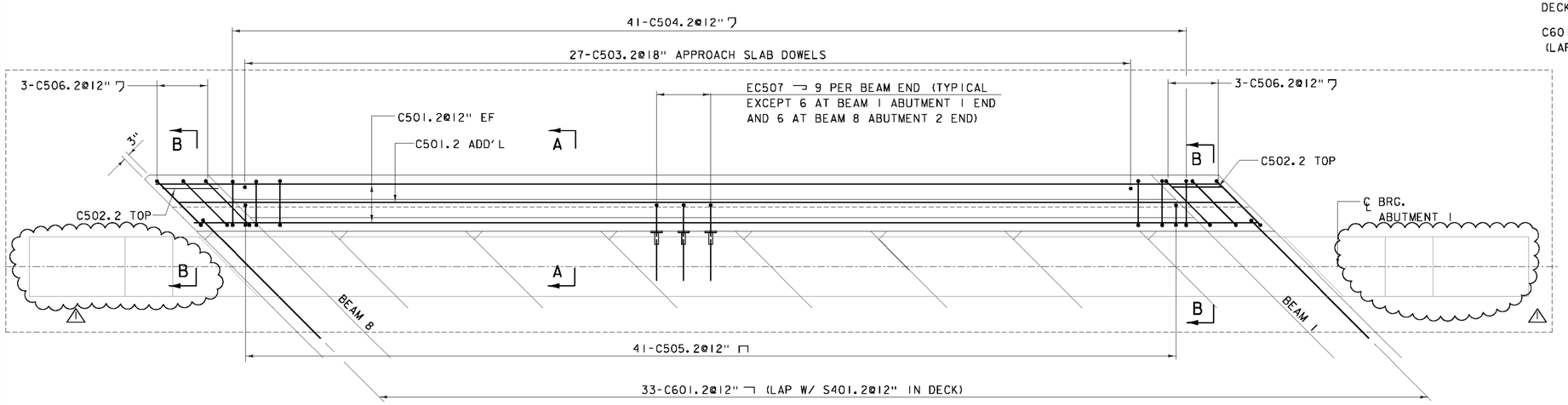


## ABUTMENT #1 CURTAIN WALL REINFORCING PLAN
## (ABUTMENT #2 SIMILAR)

SCALE: ⅜" = 1'-0"

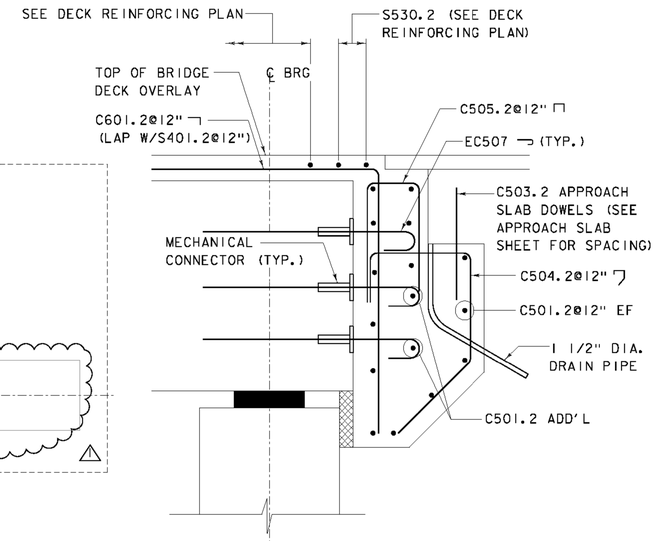


## SECTION A-A

SCALE: ¾" = 1'-0"

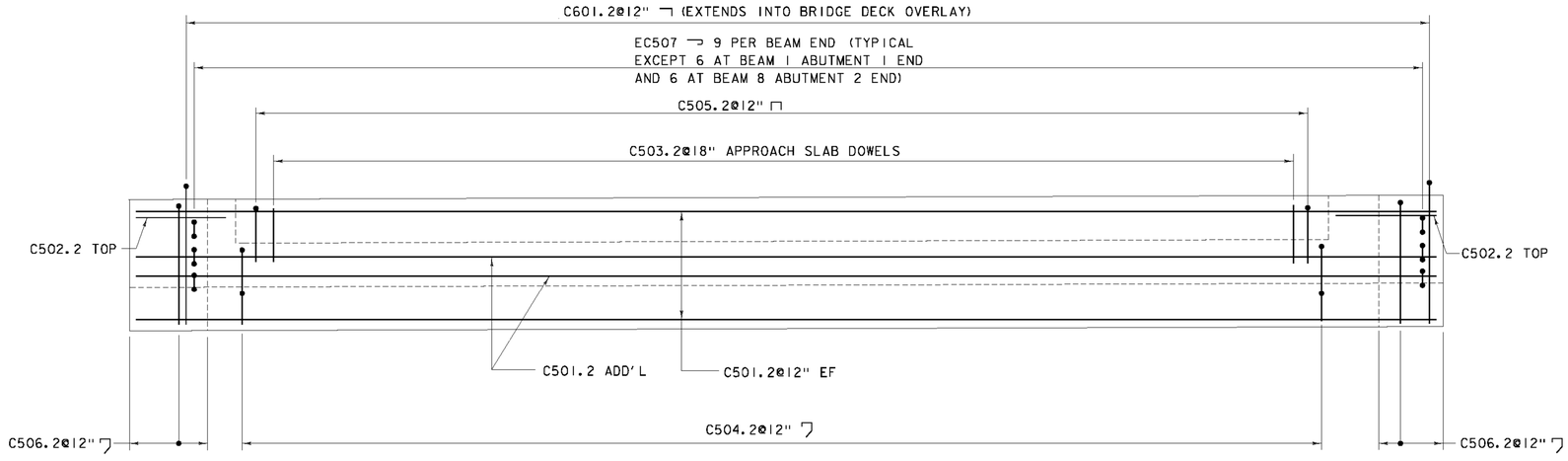


(BRIDGE DECK OMITTED FOR CLARITY)

## ABUTMENT #1 CURTAIN WALL REINFORCING ELEVATION
## (ABUTMENT #2 SIMILAR)

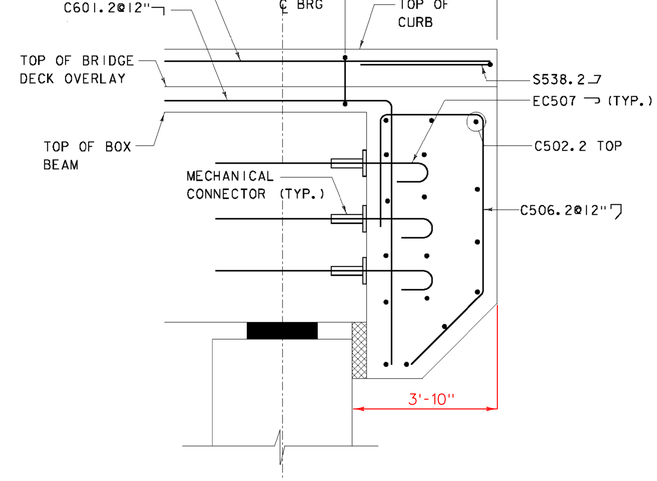


## SECTION B-B

SCALE: ¾" = 1'-0"

⚠ REVISED PRECAST ABUTMENT CONNECTORS - 1/22/2015

PARSONS BRINCKERHOFF
650 ELM STREET
MANCHESTER, NH 03101

PROJECT NAME: LINCOLN
PROJECT NUMBER: BRF 0188 (8)

FILE NAME: z10j066sub3.dgn
PROJECT LEADER: K DONINGTON
DESIGNED BY: K JAMES
CURTAIN WALL DETAILS SHEET

PLOT DATE: 8-DEC-2014
DRAWN BY: W GERHOLD
CHECKED BY: R GAUDREAU
SHEET 34 OF 62

STATE OF VERMONT
AGENCY OF TRANSPORTATION

# REINFORCING STEEL SCHEDULE

| ITEM | EACH | SIZE | LENGTH | MARK | TYPE | A | B | C | D | E | F | G | H | J | K | R | O |
|---|---|---|---|---|---|---|---|---|---|---|---|---|---|---|---|---|---|
| | | | **ABUTMENT #1 FOOTING** | | | | | | | | | | | | | | |
| x | 66 | 5 | 10'- 6" | 1A501 | STR | | | | | | | | | | | | |
| | 24 | 5 | 40'- 0" | 1A502 | STR | | | | | | | | | | | | |
| | 24 | 5 | 27'- 6" | 1A503 | STR | | | | | | | | | | | | |
| | | | | | | | | | | | | | | | | | |
| x | 130 | 6 | 10'- 6" | 1A601 | STR | | | | | | | | | | | | |
| | | | | | | | | | | | | | | | | | |
| | 32 | 8 | 3'- 6" | 1A801 | STR | | | | | | | | | | | | |
| | | | | | | | | | | | | | | | | | |
| | 66 | 5 | 4'- 7" | 1A504 | 17 | | 1'- 6" | 3'- 1" | --- | | | | | | | | |
| | | | | | | | | | | | | | | | | | |
| ✳ | 67 | 8 | 4'- 9" | 1A802 | 17 | | 1'- 6" | 3'- 3" | --- | | | | | | | | |
| | | | | | | | | | | | | | | | | | |
| | | | **ABUTMENT #2 FOOTING** | | | | | | | | | | | | | | |
| | | | | | | | | | | | | | | | | | |
| x | 47 | 5 | 10'- 6" | 2A501 | STR | | | | | | | | | | | | |
| | 8 | 5 | 14'- 3" | 2A502 | STR | | | | | | | | | | | | |
| | 18 | 5 | 9'- 9" | 2A503 | STR | | | | | | | | | | | | |
| | 24 | 5 | 37'- 2" | 2A504 | STR | | | | | | | | | | | | |
| | 24 | 5 | 18'- 10" | 2A505 | STR | | | | | | | | | | | | |
| | 5 | 5 | 6'- 9" | 2A506 | STR | | | | | | | | | | | | |
| | 22 | 5 | 16'- 1" | 2A507 | STR | | | | | | | | | | | | |
| | | | | | | | | | | | | | | | | | |
| x | 93 | 6 | 10'- 6" | 2A601 | STR | | | | | | | | | | | | |
| | 15 | 6 | 14'- 3" | 2A602 | STR | | | | | | | | | | | | |
| | 35 | 6 | 9'- 9" | 2A603 | STR | | | | | | | | | | | | |
| | 8 | 6 | 6'- 9" | 2A604 | STR | | | | | | | | | | | | |
| | | | | | | | | | | | | | | | | | |
| | 40 | 8 | 3'- 6" | 2A801 | STR | | | | | | | | | | | | |
| | | | | | | | | | | | | | | | | | |
| | 83 | 5 | 4'- 7" | 2A508 | 17 | | 1'- 6" | 3'- 1" | --- | | | | | | | | |
| | 12 | 5 | 9'- 0" | 2A509 | 20 | | 2'- 6" | 4'- 0" | 2'- 6" | | | | | | | | |
| | 12 | 5 | 10'- 8" | 2A510 | 19 | | 2'- 6" | 5'- 8" | 2'- 6" | | | | 1'- 9" | | 1'- 9" | | 9'- 2" |
| | | | | | | | | | | | | | | | | | |
| x | 26 | 7 | 4'- 9" | 2A701 | 17 | | 1'- 6" | 3'- 3" | --- | | | | | | | | |
| | | | | | | | | | | | | | | | | | |
| | 51 | 8 | 4'- 9" | 2A802 | 17 | | 1'- 6" | 3'- 3" | --- | | | | | | | | ADDED |
| | | | | | | | | | | | | | | | | | |
| | | | **ABUTMENT #1 CURTAIN WALL** | | | | | | | | | | | | | | |
| | | | | | | | | | | | | | | | | | |
| | 16 | 5 | 44'- 6" | 1C501.2 | STR | | | | | | | | | | | | |
| | 2 | 5 | 2'- 1" | 1C502.2 | STR | | | | | | | | | | | | |
| | 27 | 5 | 2'- 2" | 1C503.2 | STR | | | | | | | | | | | | |
| | | | | | | | | | | | | | | | | | |
| | 41 | 5 | 6'- 3" | 1C504.2 | 16 | 0'- 9" | 1'- 10" | 1'- 11" | 1'- 9" | | | | 1'- 3" | | 1'- 3" | | |
| x ✳ | 42 | 5 | 5'- 3" | 1C505.2 | 17 | | 2'- 2" | 0'- 11" | 2'- 2" | | | | | | | | |
| | 6 | 5 | 10'- 0" | 1C506.2 | 16 | 2'- 0" | 2'- 7" | 3'- 2" | 2'- 3" | | | | 1'- 7" | | 1'- 7" | | |
| △ | 71 | 5 | 1'- 9" | 1EC507 | C1 | | 1'- 1" | 0'- 5" | | | | | | | | | |
| | | | | | | | | | | | | | | | | | |
| x ✳ | 34 | 6 | 10'- 8" | 1C601.2 | 17 | | 6'- 0" | 4'- 8" | --- | | | | | | | | |
| | | | | | | | | | | | | | | | | | |
| | | | **ABUTMENT #2 CURTAIN WALL** | | | | | | | | | | | | | | |
| | | | | | | | | | | | | | | | | | |
| | 16 | 5 | 44'- 6" | 2C501.2 | STR | | | | | | | | | | | | |
| | 2 | 5 | 2'- 1" | 2C502.2 | STR | | | | | | | | | | | | |
| | 27 | 5 | 2'- 2" | 2C503.2 | STR | | | | | | | | | | | | |
| | | | | | | | | | | | | | | | | | |
| | 41 | 5 | 6'- 3" | 2C504.2 | 16 | 0'- 9" | 1'- 10" | 1'- 11" | 1'- 9" | | | | 1'- 3" | | 1'- 3" | | |
| | 41 | 5 | 5'- 3" | 2C505.2 | 17 | | 2'- 2" | 0'- 11" | 2'- 2" | | | | | | | | |
| | 6 | 5 | 10'- 0" | 2C506.2 | 16 | 2'- 0" | 2'- 7" | 3'- 2" | 2'- 3" | | | | 1'- 7" | | 1'- 7" | | |
| | | | | | | | | | | | | | | | | | |
| ✳ | 70 | 5 | 1'- 9" | 2EC507 | C1 | | 1'- 1" | 0'- 5" | | | | | | | | | |
| | | | | | | | | | | | | | | | | | |
| | 33 | 6 | 10'- 8" | 2C601.2 | 17 | | 6'- 0" | 4'- 8" | --- | | | | | | | | |
| | | | **5" CIP OVERLAY (DECK)** | | | | | | | | | | | | | | |
| ✳ | 100 | 4 | 43'- 10" | S401.2 | STR | | | | | | | | | | | | |
| | | | | | | | | | | | | | | | | | |
| ADDED x | 95 | 5 | 31'- 6" | S501.2 | STR | | | | | | | | | | | | |
| | 2 | 5 | 30'- 6" | S502.2 | STR | | | | | | | | | | | | |
| | 2 | 5 | 29'- 6" | S503.2 | STR | | | | | | | | | | | | |
| | 2 | 5 | 28'- 6" | S504.2 | STR | | | | | | | | | | | | |
| | 2 | 5 | 27'- 6" | S505.2 | STR | | | | | | | | | | | | |
| | 2 | 5 | 26'- 6" | S506.2 | STR | | | | | | | | | | | | |
| | 2 | 5 | 25'- 6" | S507.2 | STR | | | | | | | | | | | | |
| | 2 | 5 | 24'- 6" | S508.2 | STR | | | | | | | | | | | | |
| | 2 | 5 | 23'- 6" | S509.2 | STR | | | | | | | | | | | | |
| | 2 | 5 | 22'- 6" | S510.2 | STR | | | | | | | | | | | | |
| | 2 | 5 | 21'- 6" | S511.2 | STR | | | | | | | | | | | | |
| | 2 | 5 | 20'- 6" | S512.2 | STR | | | | | | | | | | | | |
| | 2 | 5 | 19'- 6" | S513.2 | STR | | | | | | | | | | | | |
| | 2 | 5 | 18'- 6" | S514.2 | STR | | | | | | | | | | | | |
| | 2 | 5 | 17'- 6" | S515.2 | STR | | | | | | | | | | | | |
| | 2 | 5 | 16'- 6" | S516.2 | STR | | | | | | | | | | | | |
| | 2 | 5 | 15'- 6" | S517.2 | STR | | | | | | | | | | | | |
| | 2 | 5 | 14'- 6" | S518.2 | STR | | | | | | | | | | | | |
| | 2 | 5 | 13'- 6" | S519.2 | STR | | | | | | | | | | | | |
| | 2 | 5 | 12'- 6" | S520.2 | STR | | | | | | | | | | | | |

| ITEM | EACH | SIZE | LENGTH | MARK | TYPE | A | B | C | D | E | F | G | H | J | K | R | O |
|---|---|---|---|---|---|---|---|---|---|---|---|---|---|---|---|---|---|
| | 2 | 5 | 11'- 6" | S521.2 | STR | | | | | | | | | | | | |
| | 2 | 5 | 10'- 6" | S522.2 | STR | | | | | | | | | | | | |
| | 2 | 5 | 9'- 6" | S523.2 | STR | | | | | | | | | | | | |
| | 2 | 5 | 8'- 6" | S524.2 | STR | | | | | | | | | | | | |
| | 2 | 5 | 7'- 6" | S525.2 | STR | | | | | | | | | | | | |
| | 2 | 5 | 6'- 6" | S526.2 | STR | | | | | | | | | | | | |
| | 2 | 5 | 5'- 6" | S527.2 | STR | | | | | | | | | | | | |
| | 2 | 5 | 4'- 6" | S528.2 | STR | | | | | | | | | | | | |
| | 2 | 5 | 3'- 6" | S529.2 | STR | | | | | | | | | | | | |
| | 4 | 5 | 44'- 6" | S530.2 | STR | | | | | | | | | | | | |
| | 18 | 5 | 44'- 3" | S531.2 | STR | | | | | | | | | | | | |
| | | | | | | | | | | | | | | | | | |
| | 2 | 5 | 2'- 11" | S532.2 | 19 | | 1'- 3" | 1'- 8" | --- | | | | | | | | |
| | 2 | 5 | 2'- 7" | S533.2 | 19 | | 1'- 3" | 1'- 4" | --- | | | | | | | | |
| | 346 | 5 | 4'- 9" | S534.2 | S5 | 1'- 0" | 0'- 8" | 1'- 5" | 0'- 8" | | | 1'- 0" | | | | | |
| | 16 | 5 | 6'- 5" | S535.2 | 17 | | 2'- 6" | 1'- 5" | 2'- 6" | | | | | | | | |
| | 4 | 5 | 5'- 10" | S536.2 | 17 | | 2'- 6" | 0'- 10" | 2'- 6" | | | | | | | | |
| | 4 | 5 | 5'- 6" | S537.2 | 17 | | 2'- 6" | 0'- 6" | 2'- 6" | | | | | | | | |
| | 4 | 5 | 8'- 8" | S538.2 | T4 | --- | 2'- 6" | 1'- 10" | 4'- 4" | --- | | --- | | | | | |
| | | | **CIP RETAINING WALL FOOTING** | | | | | | | | | | | | | | |
| | 21 | 5 | 7'- 6" | F501 | STR | | | | | | | | | | | | |
| | 22 | 5 | 9'- 9" | F502 | STR | | | | | | | | | | | | |
| | 18 | 5 | 16'- 6" | F503 | STR | | | | | | | | | | | | |
| ▲ | 22 | 5 | 14'- 6" | F504 | STR | | | | | | | | | | | | |
| ▲ | 22 | 5 | 8'- 0" | F505 | STR | | | | | | | | | | | | |
| | | | | | | | | | | | | | | | | | |
| | 23 | 6 | 7'- 6" | F601 | STR | | | | | | | | | | | | |
| | 42 | 6 | 9'- 9" | F602 | STR | | | | | | | | | | | | |
| | | | | | | | | | | | | | | | | | |
| x | 20 | 8 | 3'- 6" | F801 | STR | | | | | | | | | | | | |
| | | | | | | | | | | | | | | | | | |
| x | 20 | 5 | 10'- 8" | F506 | 19 | | 2'- 6" | 5'- 8" | 2'- 6" | | | | | | 1'- 9" | | 9'- 2" |
| | 20 | 5 | 9'- 0" | F507 | 20 | | 2'- 6" | 4'- 0" | 2'- 6" | | | | | | | | |
| | 55 | 5 | 5'- 5" | F508 | 17 | | 1'- 0" | 4'- 5" | --- | | | | | | | | |
| | | | | | | | | | | | | | | | | | |
| | 19 | 7 | 8'- 11" | F701 | 17 | | 1'- 2" | 7'- 9" | --- | | | | | | | | |
| | | | **CIP RETAINING WALL STEM** | | | | | | | | | | | | | | |
| x ▲ | 10 | 5 | 10'- 0" | EW501 | STR | | | | | | | | | | | | |
| | 8 | 5 | 24'- 6" | EW502 | STR | | | | | | | | | | | | |
| | 18 | 5 | 17'- 6" | EW503 | STR | | | | | | | | | | | | |
| | 8 | 5 | 4'- 9" | EW504 | STR | | | | | | | | | | | | |
| | --- | --- | --- | EW505 | --- | | | | | | | | | | | | |
| | 13 | 5 | 6'- 9" | EW506 | STR | | | | | | | | | | | | |
| | 6 | 5 | 10'- 9" | EW507 | STR | | | | | | | | | | | | |
| ▲ | 2 | 5 | 10'- 3" | EW508 | STR | | | | | | | | | | | | |
| | 3 | 6 | 9'- 9" | EW601 | STR | | | | | | | | | | | | |
| | 3 | 6 | 21'- 6" | EW602 | STR | | | | | | | | | | | | |
| | | | | | | | | | | | | | | | | | |
| ✳ | 14 | 7 | 6'- 9" | EW701 | STR | | | | | | | | | | | | |
| | 6 | 7 | 10'- 9" | EW702 | STR | | | | | | | | | | | | |
| | | | | | | | | | | | | | | | | | |
| ▲ | 48 | 5 | 8'- 10" | EW509 | 17 | | 3'- 9" | 1'- 4" | 3'- 9" | | | | | | | | |
| ▲ | 11 | 5 | 10'- 4" | EW510 | 17 | | 4'- 6" | 1'- 4" | 4'- 6" | | | | | | | | |
| ▲ | 2 | 5 | 6'- 0" | EW511 | 17 | | 2'- 0" | 2'- 0" | 2'- 0" | | | | | | | | |
| | | | **APPROACH SLABS** | | | | | | | | | | | | | | |
| | 24 | 5 | 24'- 3" | AS501.2 | STR | | | | | | | | | | | | |

## ~ NOTES ~

1. UNLESS OTHERWISE DESIGNATED, ALL BAR REINFORCEMENT FOR CONCRETE IN SIZES UP TO AND INCLUDING NO. 18 SHALL CONFORM TO THE REQUIREMENTS OF THE "SPECIFICATIONS FOR DEFORMED BILLET-STEEL BARS FOR CONCRETE REINFORCEMENT", AASHTO M 31 (ASTM A 615-SI). ALL BARS SHALL BE GRADE 60, UNLESS OTHERWISE DESIGNATED.
2. FOR TYPICAL BENDING DETAILS, RECOMMENDED PIN DIAMETER "D" OF BENDS AND HOOKS, AND OTHER STANDARD PRACTICE, SEE CURRENT CONCRETE REINFORCING STEEL INSTITUTE "MANUAL OF STANDARD PRACTICE".
3. BARS WHICH REQUIRE MORE ACCURATE BENDING THAN STANDARD PRACTICES SHOULD HAVE LIMITS INDICATED.
4. ALL DIMENSIONS ARE OUT TO OUT OF BAR EXCEPT "A" AND "G" ON STANDARD 180 DEGREE AND 135 DEGREE HOOKS.
5. "J" DIMENSION ON 180 DEGREE HOOKS TO BE SHOWN ONLY WHERE NECESSARY TO RESTRICT HOOK SIZE. OTHERWISE, STANDARD HOOKS ARE TO BE USED.
6. "H" DIMENSION ON STIRRUPS TO BE SHOWN ONLY WHEN NECESSARY TO MAINTAIN CLEARANCES.
7. WHERE SLOPE DIFFERS FROM 45 DEGREES, DIMENSIONS "H" AND "K" MUST BE SHOWN.
8. ▲ DENOTES BARS TO BE CUT IN FIELD.
9. ✳ DENOTES ONE EXTRA BAR ADDED FOR TESTING PURPOSES.
10. △ DENOTES TWO EXTRA BARS ADDED FOR TESTING PURPOSES.
11. E IN BAR MARK PREFIX DENOTES EPOXY COATED REINFORCING STEEL.

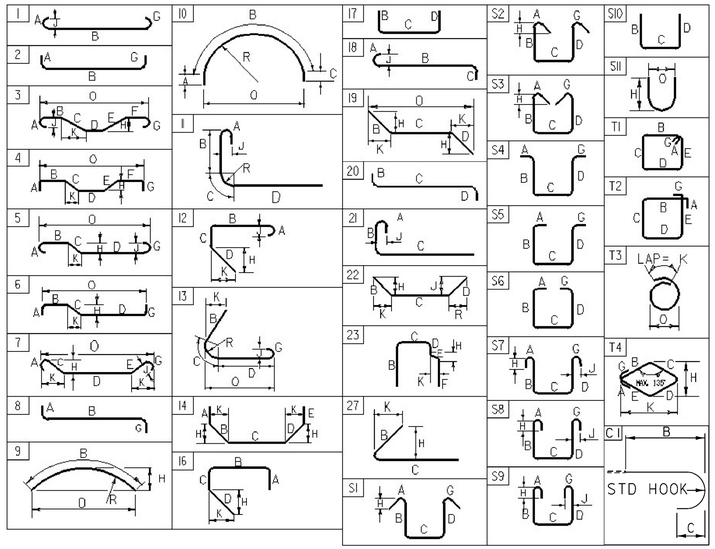


## ASTM STANDARD REINFORCING BARS

| BAR SIZE DESIGNATION | WEIGHT POUNDS PER FOOT | NOMINAL DIMENSIONS ROUND SECTION | | |
|---|---|---|---|---|
| | | DIAMETER INCHES | AREA INCHES$^2$ | PERIMETER INCHES |
| #3 | 0.376 | 0.375 | 0.11 | 1.178 |
| #4 | 0.668 | 0.500 | 0.20 | 1.571 |
| #5 | 1.043 | 0.625 | 0.31 | 1.963 |
| #6 | 1.502 | 0.750 | 0.44 | 2.356 |
| #7 | 2.044 | 0.875 | 0.60 | 2.749 |
| #8 | 2.670 | 1.000 | 0.79 | 3.142 |
| #9 | 3.400 | 1.128 | 1.00 | 3.544 |
| #10 | 4.303 | 1.270 | 1.27 | 3.990 |
| #11 | 5.313 | 1.410 | 1.56 | 4.430 |
| #14 | 7.65 | 1.693 | 2.25 | 5.32 |
| #18 | 13.60 | 2.257 | 4.00 | 7.09 |

## ~ REINFORCING STEEL CORROSION RESISTANCE LEVEL ~

THE REINFORCING STEEL MARKS IN THIS SCHEDULE INDICATE THE REQUIRED BAR CORROSION RESISTANCE LEVEL. CORROSION RESISTANCE LEVEL IS DENOTED WITH A .2 FOR LEVEL TWO SUFFIX OR .3 FOR LEVEL THREE SUFFIX, .1 FOR LEVEL ONE IS TO BE OMITTED. THE BAR MATERIAL TYPE AND BAR STEEL GRADE PROVIDED FOR EACH CORROSION LEVEL WILL BE RECORDED ON THE PLAN SET PI SHEET FOR AS-BUILT RECORD PLAN ARCHIVES.

PROJECT NAME: **LINCOLN**
PROJECT NUMBER: **BRF 0188 (8)**

FILE NAME: **52545TSK01_engreinf.xls**
PROJECT MANAGER: **G.K. DONINGTON**
DESIGNED BY: **K. JAMES**
**REINFORCING STEEL SCHEDULE**

PLOT DATE: **8-DEC-2014**
DRAWN BY: **W. GERHOLD**
CHECKED BY: **A. STOCKIN**
SHEET **35** OF **62**

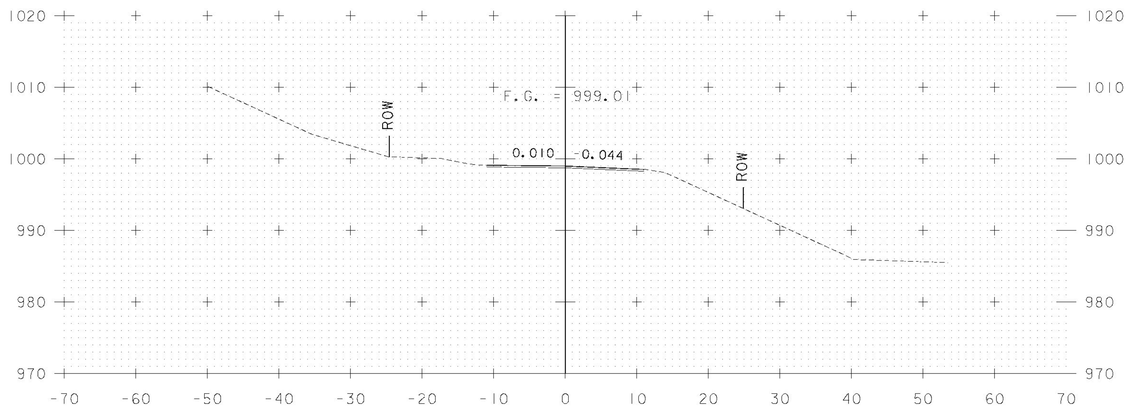


STA 500+25
BEGIN APPROACH
MATCH EXISTING GRADE AND BANKING

500+25

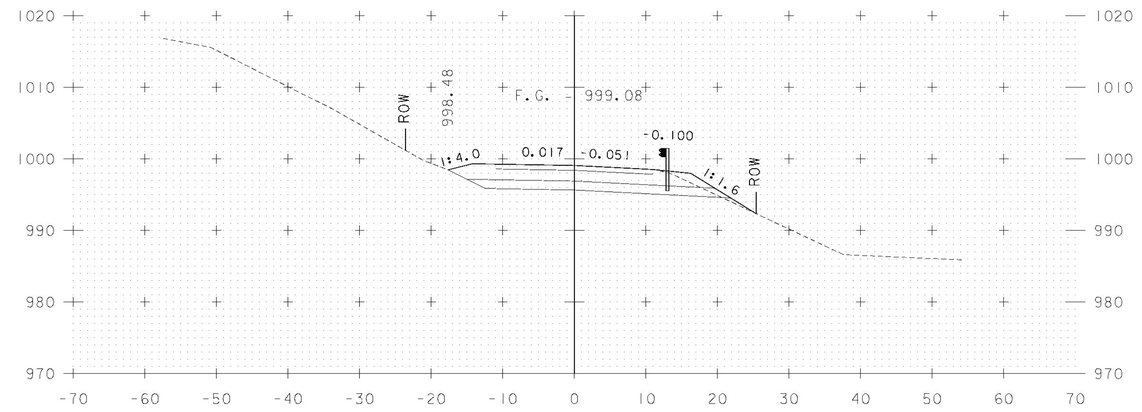


STA 500+75
END APPROACH
BEGIN PROJECT

500+75

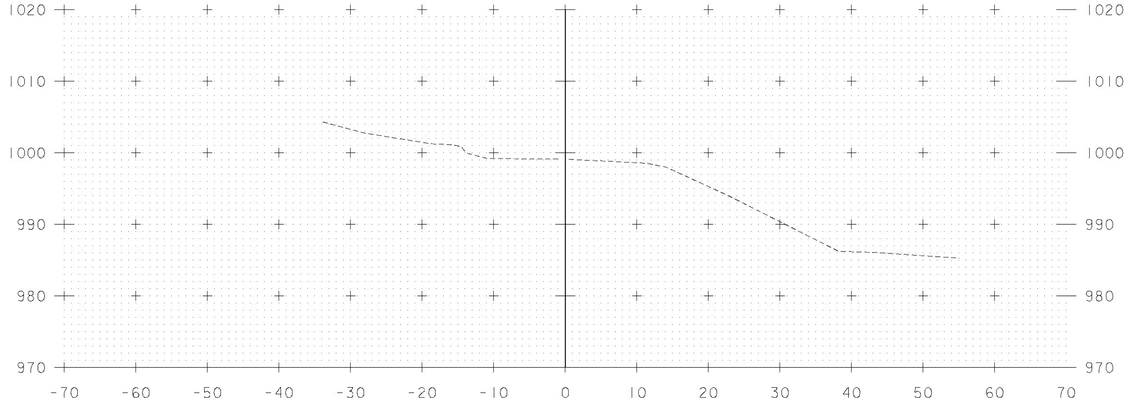


500+00

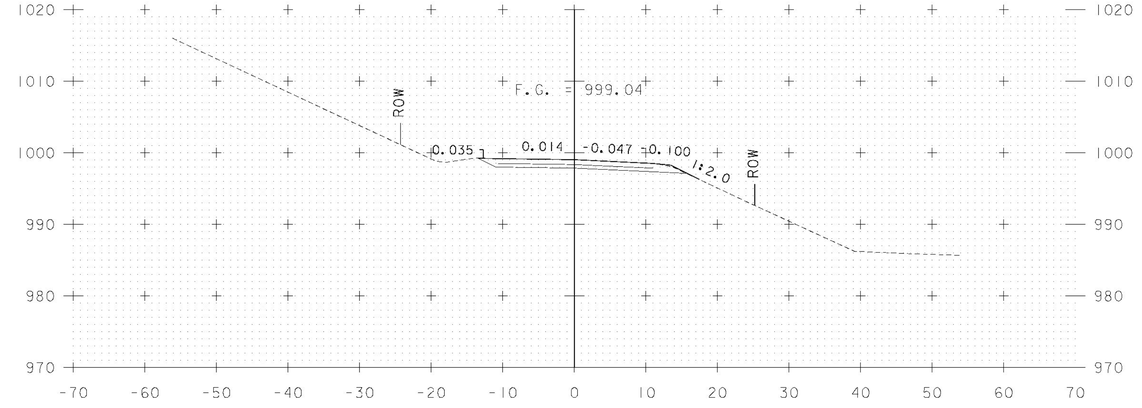


500+50

## *MAINLINE CROSS SECTIONS*
## *STA. 500+00 - STA. 500+75*

PROJECT NAME: LINCOLN
PROJECT NUMBER: BRF 0188 (8)

PARSONS BRINCKERHOFF
650 ELM STREET
MANCHESTER, NH 03101

FILE NAME: z10J066xsl.dgn
PROJECT LEADER: G.K. DONINGTON
DESIGNED BY: C CARNEY
MAINLINE CROSS SECTIONS (1)

PLOT DATE: 8-DEC-2014
DRAWN BY: C CARNEY
CHECKED BY: R BENJAMIN
SHEET 36 OF 62

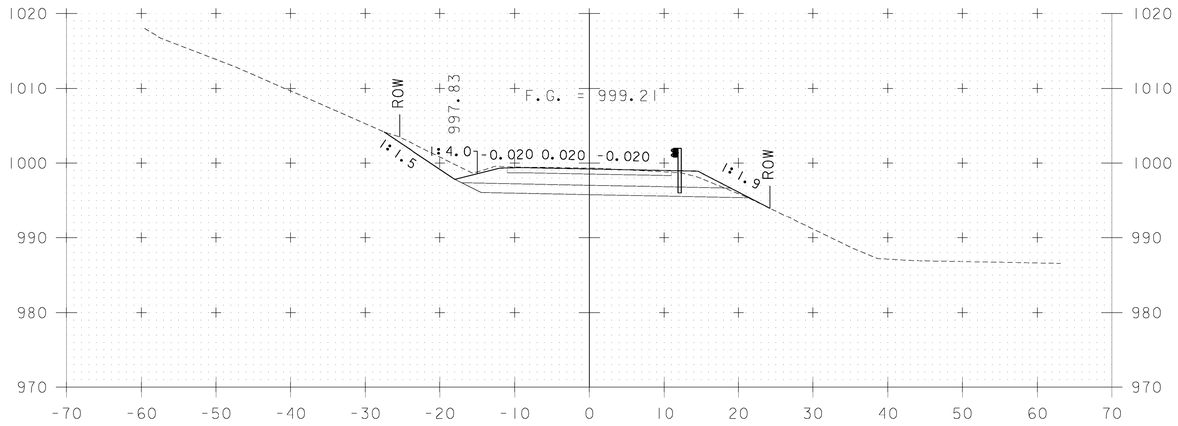


501+25

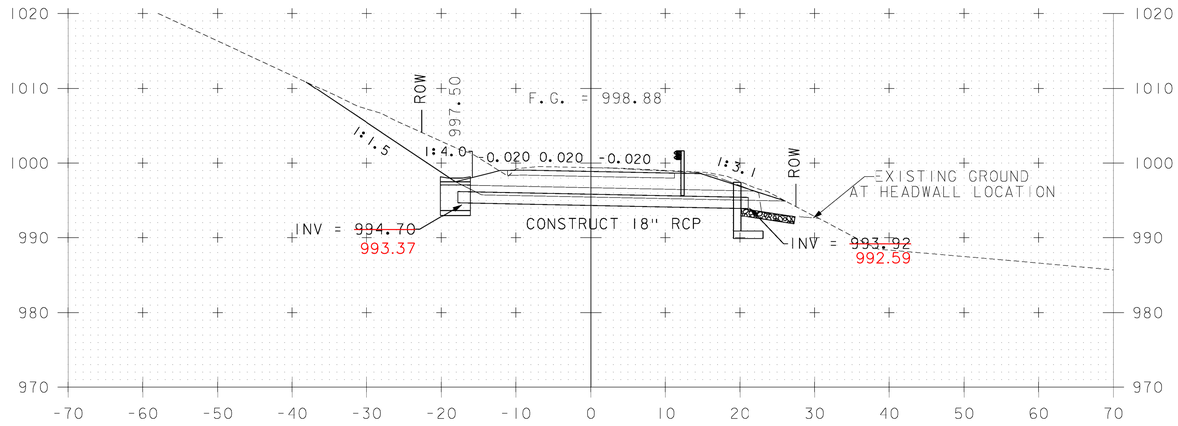


501+75

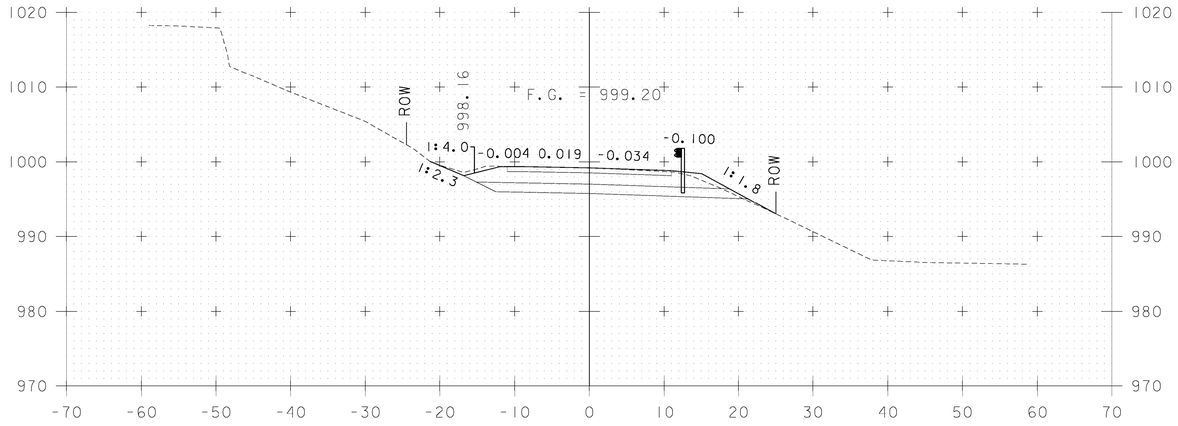


501+00

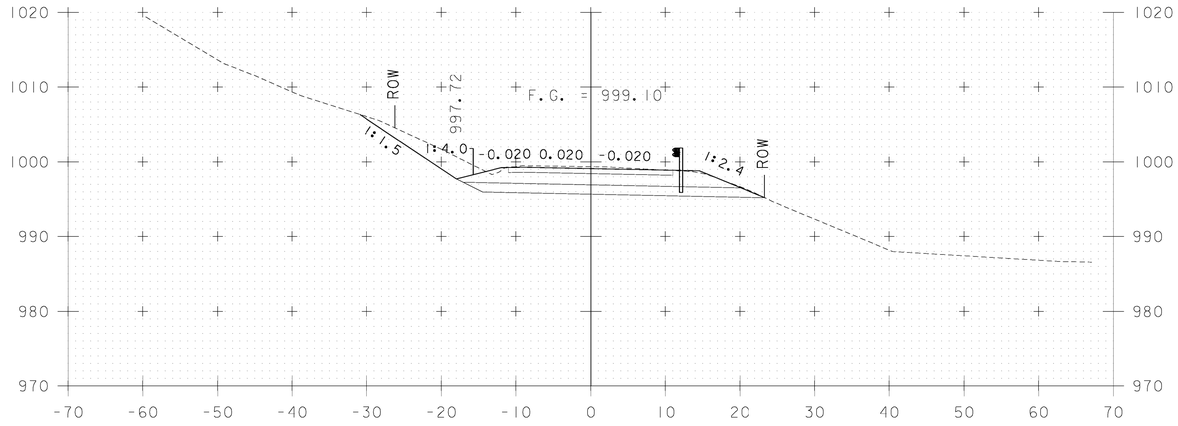


501+50

## *MAINLINE CROSS SECTIONS*
## *STA. 501+00 - STA. 501+75*

PROJECT NAME: LINCOLN

PROJECT NUMBER: BRF 0188 (8)

PARSONS BRINCKERHOFF
650 ELM STREET
MANCHESTER, NH 03101

FILE NAME: z10j066xsl.dgn
PROJECT LEADER: G.K. DONINGTON
DESIGNED BY: C CARNEY
MAINLINE CROSS SECTIONS (2)

PLOT DATE: 8-DEC-2014
DRAWN BY: C CARNEY
CHECKED BY: R BENJAMIN
SHEET 37 OF 62

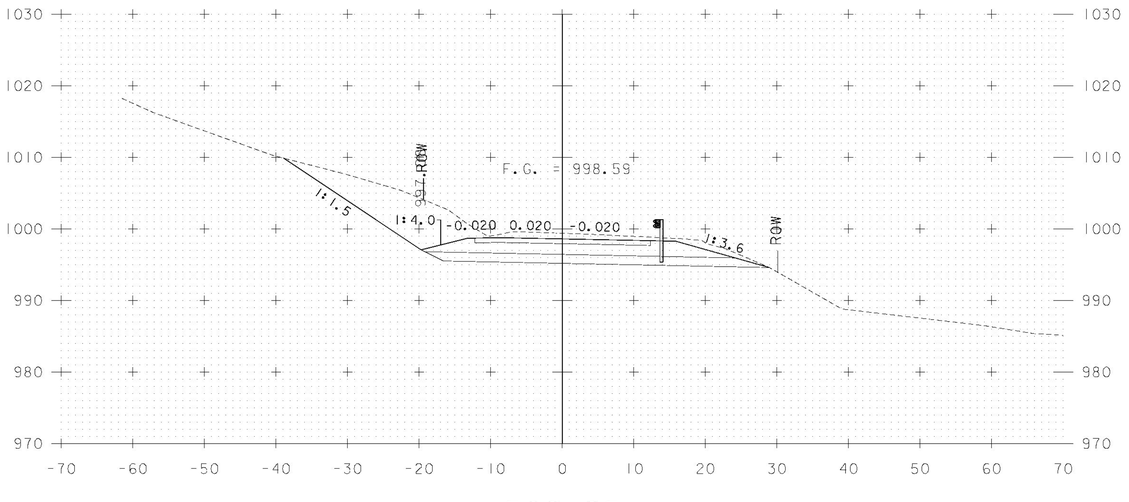


502+25

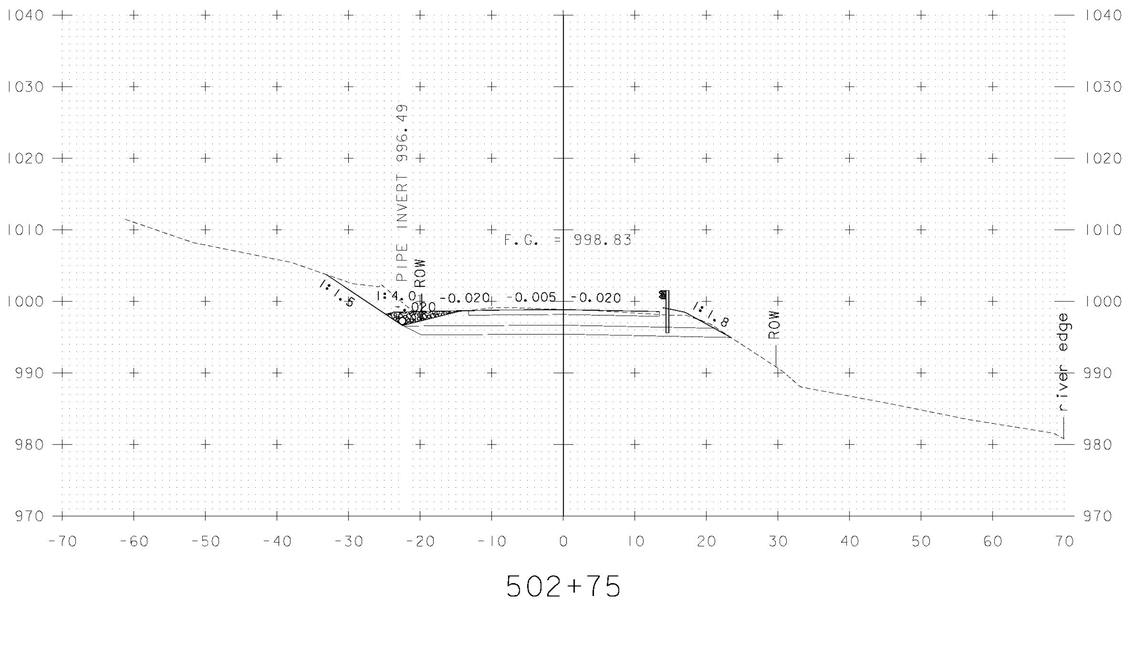


502+75

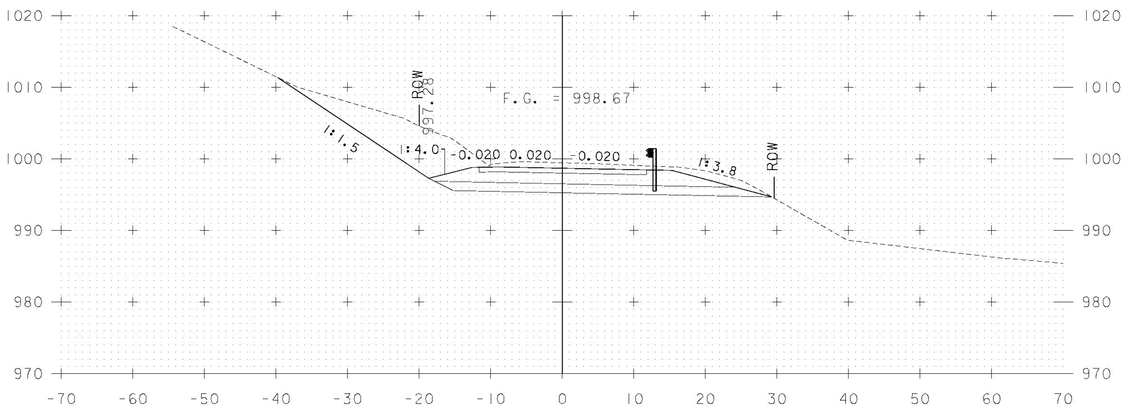


502+00

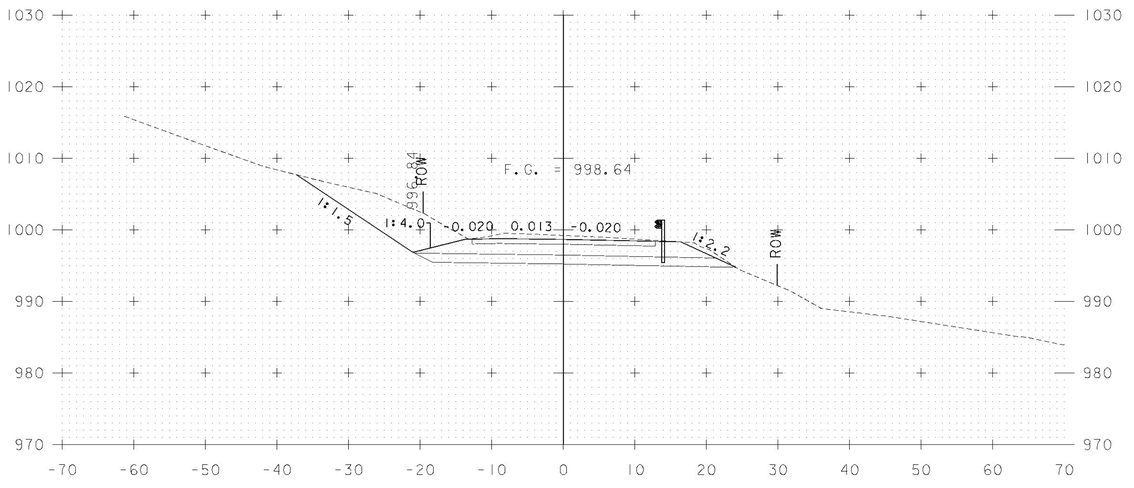


502+50

## *MAINLINE CROSS SECTIONS*
## *STA. 502+00 - STA. 502+75*

PARSONS BRINCKERHOFF
650 ELM STREET
MANCHESTER, NH 03101

PROJECT NAME: LINCOLN
PROJECT NUMBER: BRF 0188 (8)

FILE NAME: z10j066xsl.dgn
PROJECT LEADER: G.K. DONINGTON
DESIGNED BY: C CARNEY
MAINLINE CROSS SECTIONS (3)

PLOT DATE: 8-DEC-2014
DRAWN BY: C CARNEY
CHECKED BY: R BENJAMIN
SHEET 38 OF 62

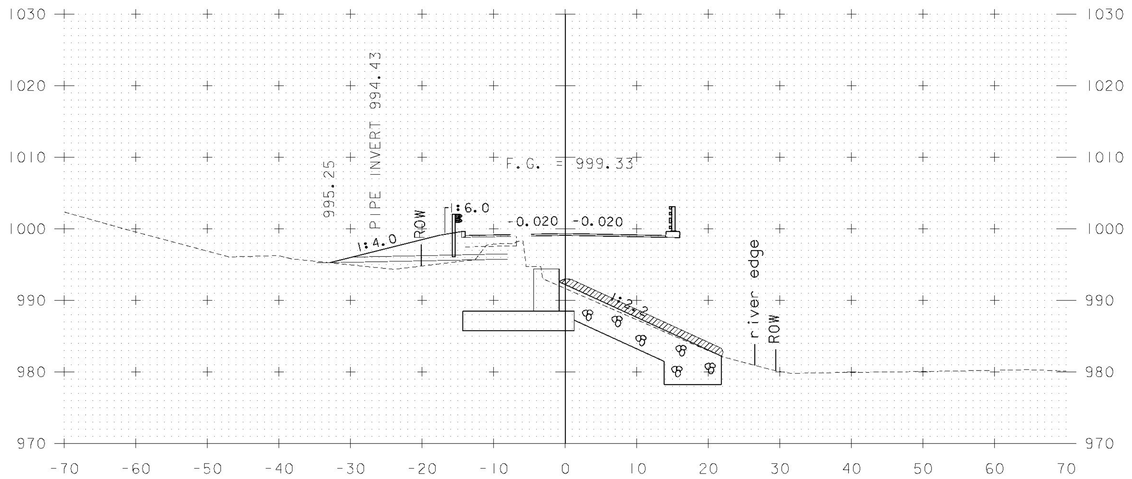


503+25

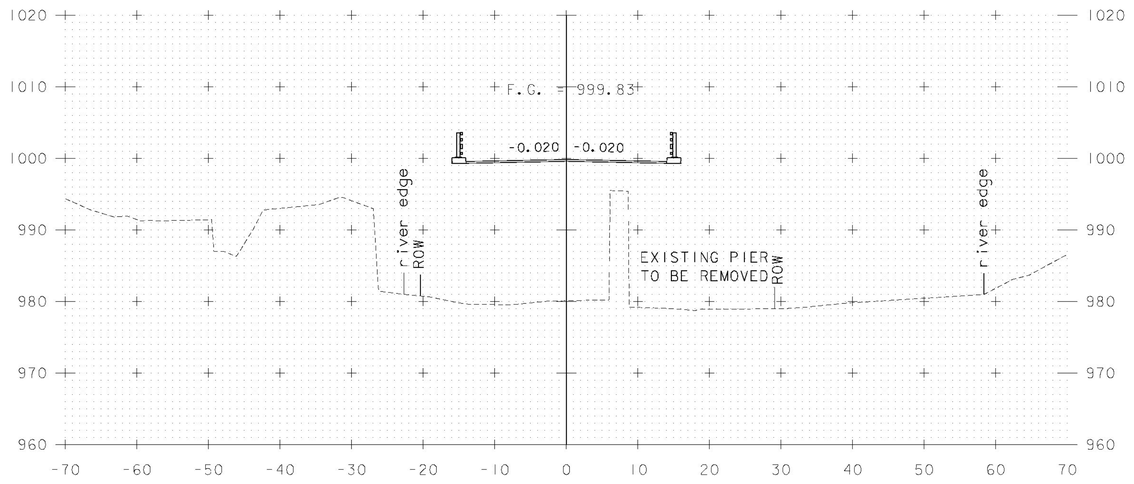


503+75

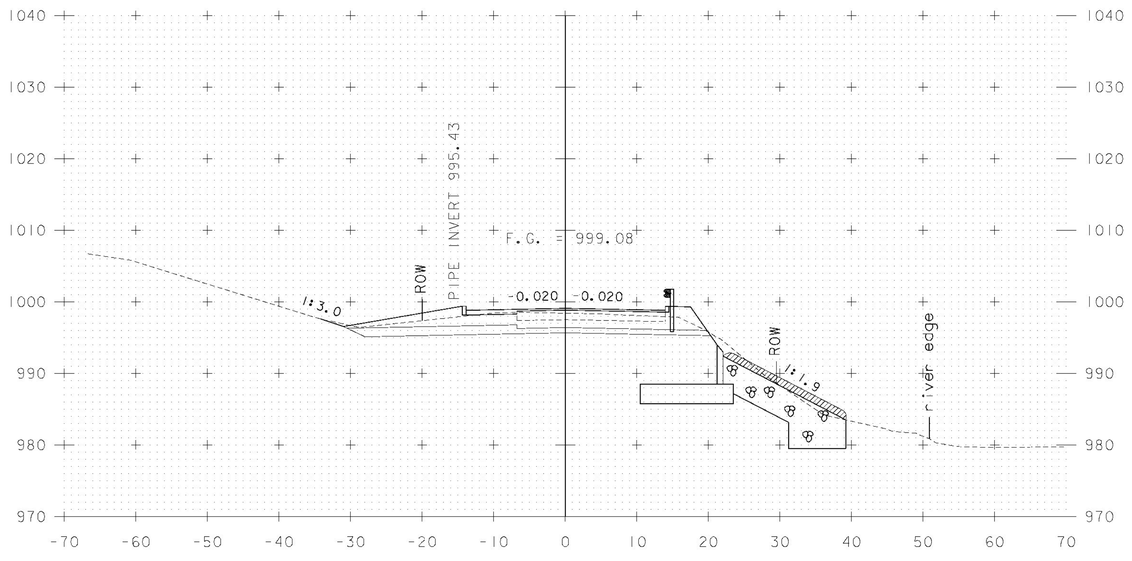


503+00

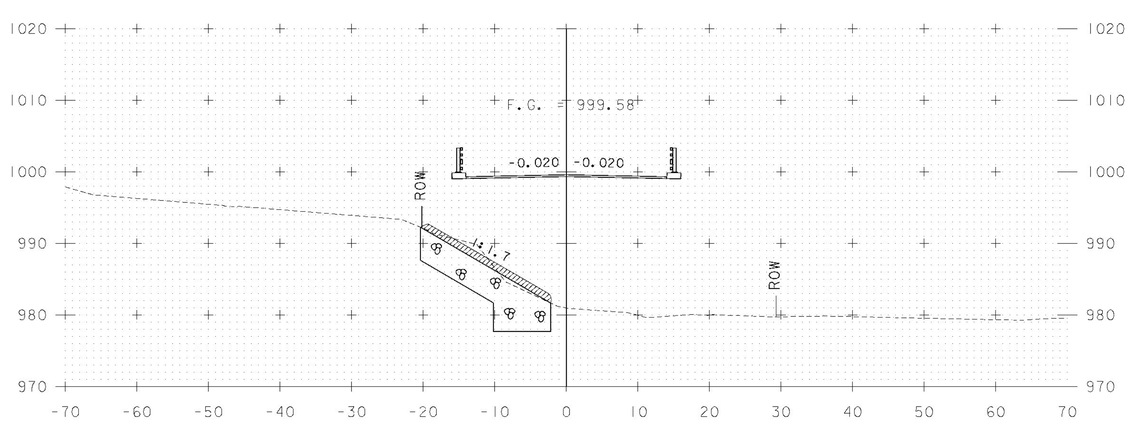


503+50

## *MAINLINE CROSS SECTIONS*
## *STA. 503+00 - STA. 503+75*

PROJECT NAME: LINCOLN
PROJECT NUMBER: BRF 0188 (8)

PARSONS BRINCKERHOFF
650 ELM STREET
MANCHESTER, NH 03101

FILE NAME: z10j066xsl.dgn
PROJECT LEADER: G.K. DONINGTON
DESIGNED BY: C CARNEY
MAINLINE CROSS SECTIONS (4)

PLOT DATE: 8-DEC-2014
DRAWN BY: C CARNEY
CHECKED BY: R BENJAMIN
SHEET 39 OF 62

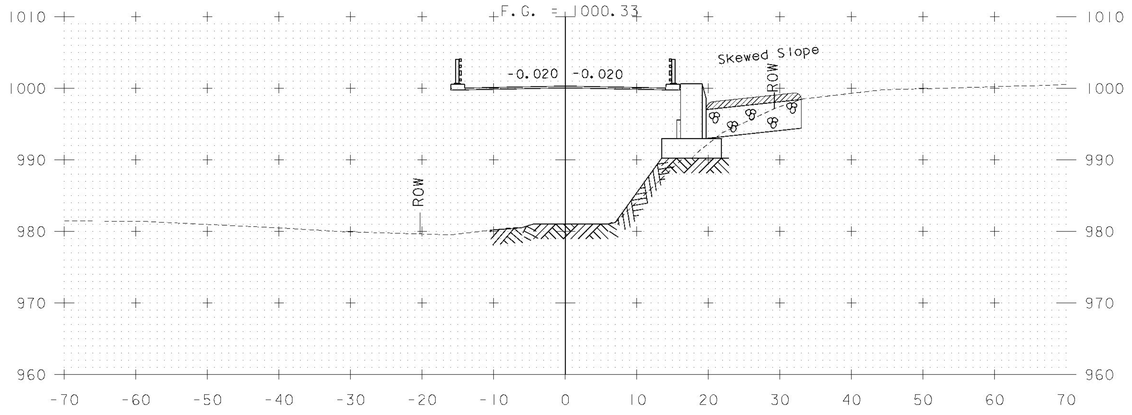


504+25

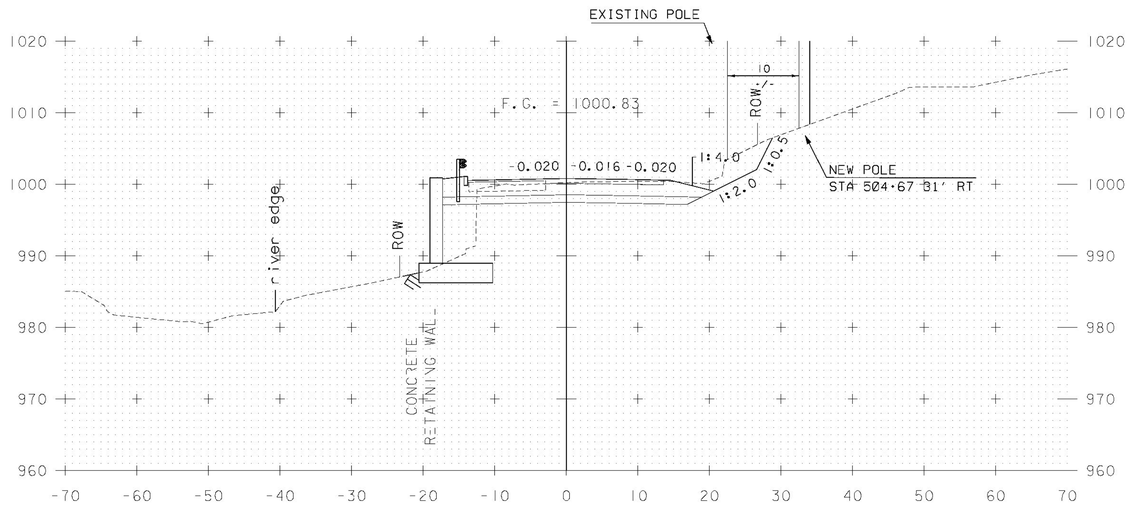


504+75

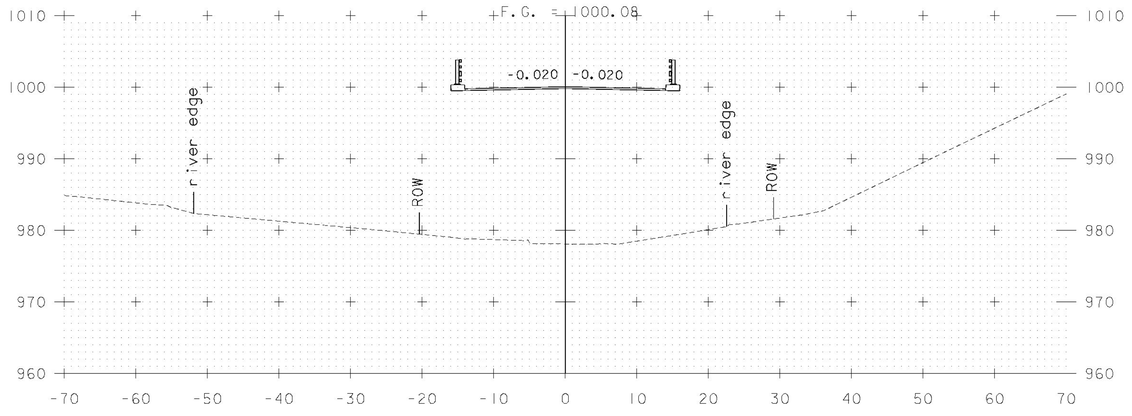


504+00

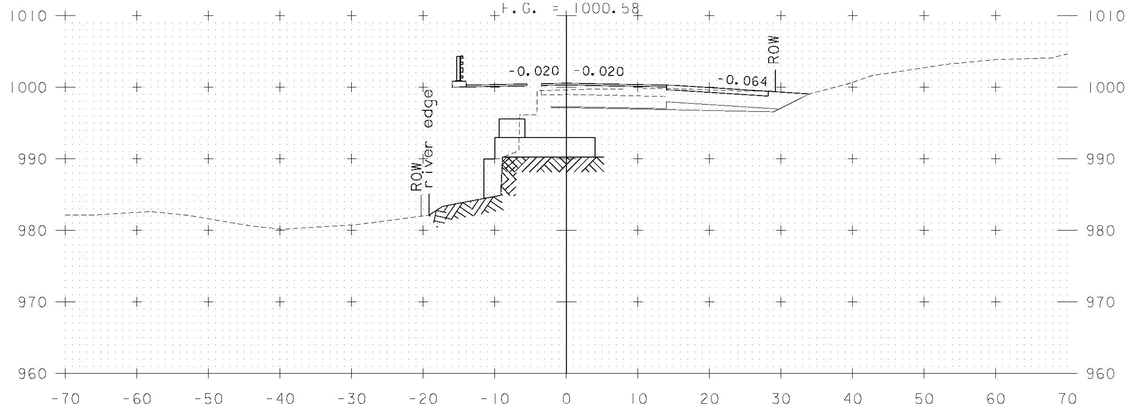


STA 504+46.35
END BRIDGE
RESUME ROADWAY

504+50

## *MAINLINE CROSS SECTIONS*
## *STA. 504+00 - STA. 504+75*

PARSONS BRINCKERHOFF
650 ELM STREET
MANCHESTER, NH 03101

| | |
|---|---|
| PROJECT NAME: LINCOLN | |
| PROJECT NUMBER: BRF 0188 (8) | |
| FILE NAME: z10j066xsl.dgn | PLOT DATE: 8-DEC-2014 |
| PROJECT LEADER: G.K. DONINGTON | DRAWN BY: C CARNEY |
| DESIGNED BY: C CARNEY | CHECKED BY: R BENJAMIN |
| MAINLINE CROSS SECTIONS (5) | SHEET 40 OF 62 |

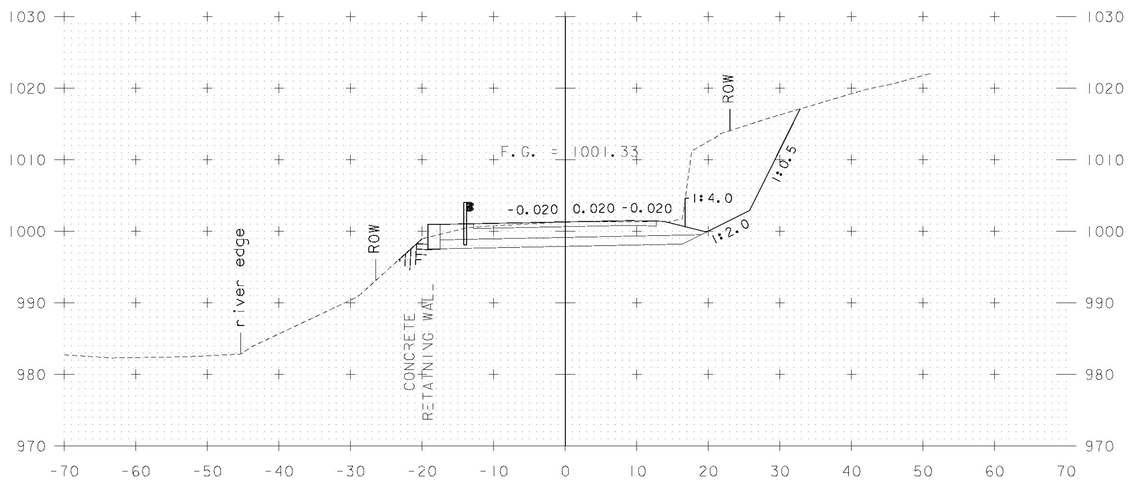


505+25

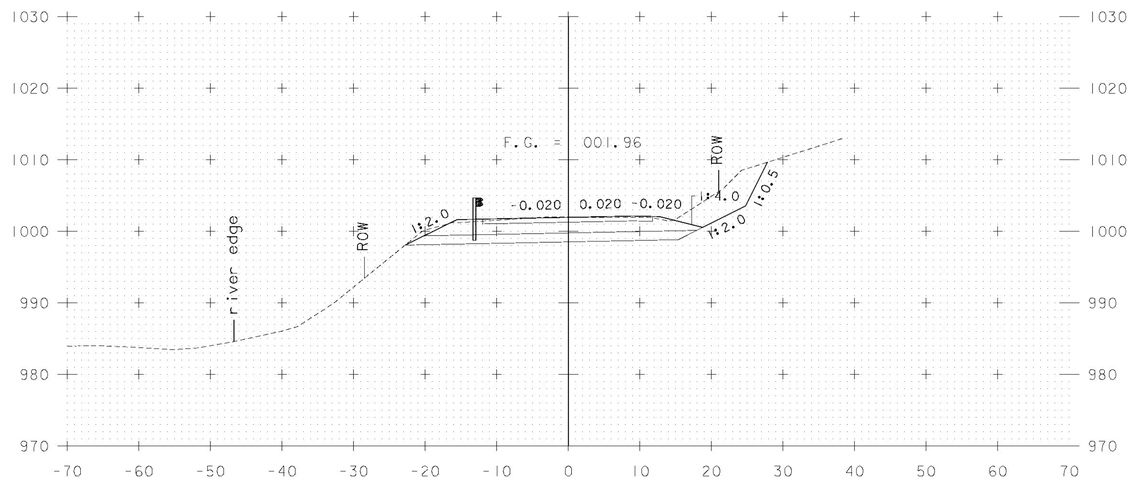


505+75

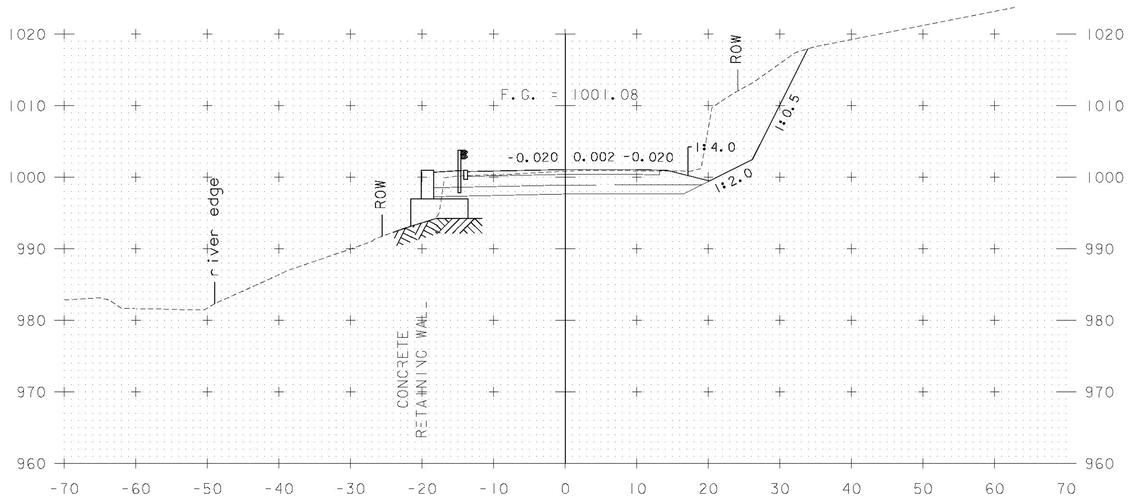


505+00

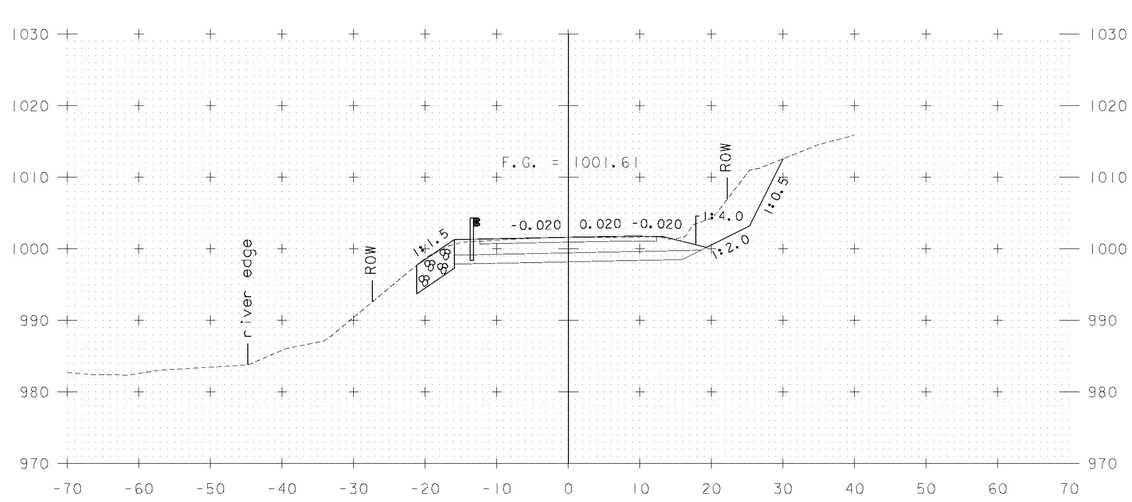


505+50

## *MAINLINE CROSS SECTIONS*
## *STA. 505+00 - STA. 505+75*

PROJECT NAME: LINCOLN
PROJECT NUMBER: BRF 0188 (8)

PARSONS BRINCKERHOFF
650 ELM STREET
MANCHESTER, NH 03101

FILE NAME: z10j066xsl.dgn
PROJECT LEADER: G.K. DONINGTON
DESIGNED BY: C CARNEY
MAINLINE CROSS SECTIONS (6)

PLOT DATE: 8-DEC-2014
DRAWN BY: C CARNEY
CHECKED BY: R BENJAMIN
SHEET 41 OF 62

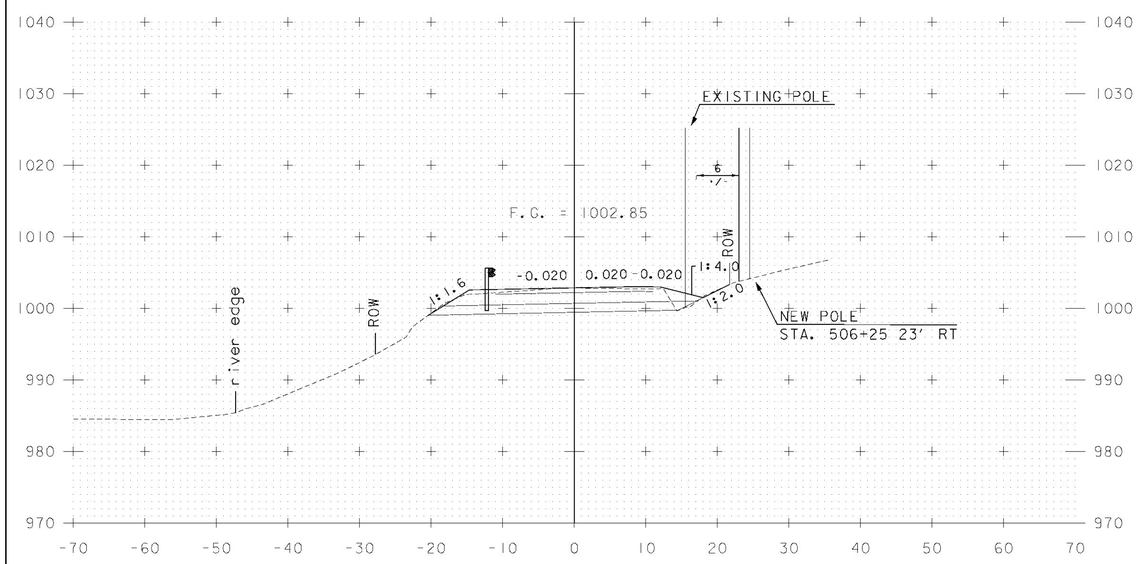


506+25

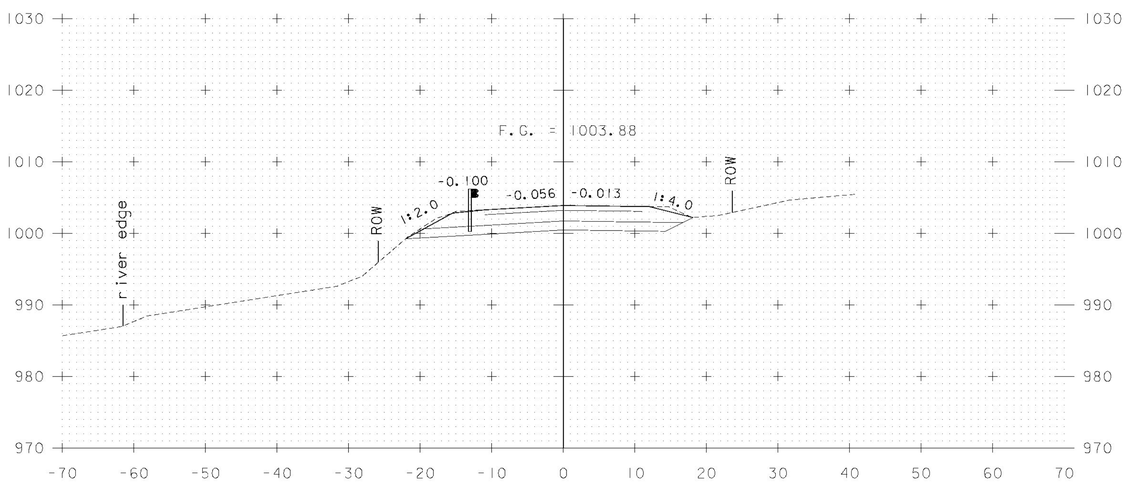


STA 506+75
END PROJECT
BEGIN APPROACH

506+75

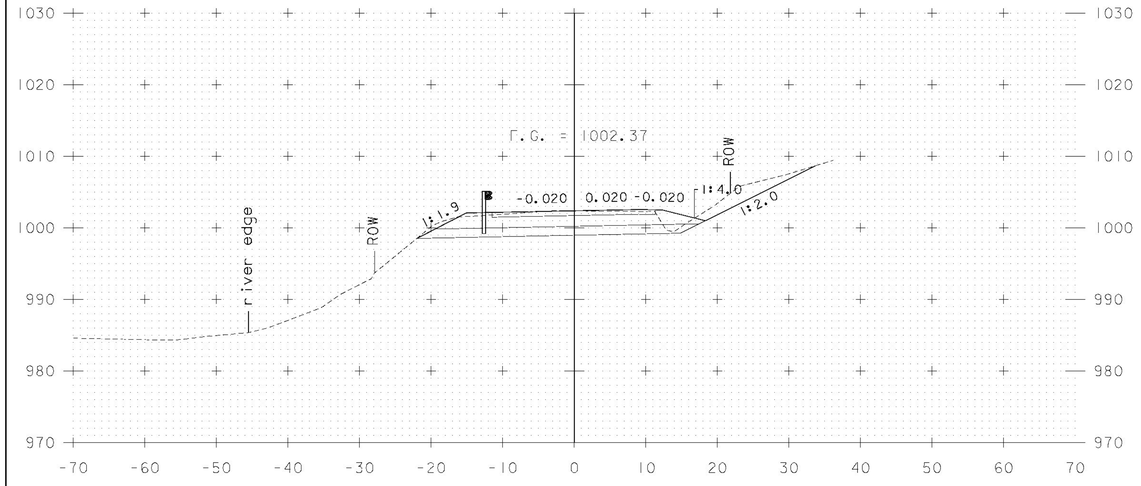


506+00

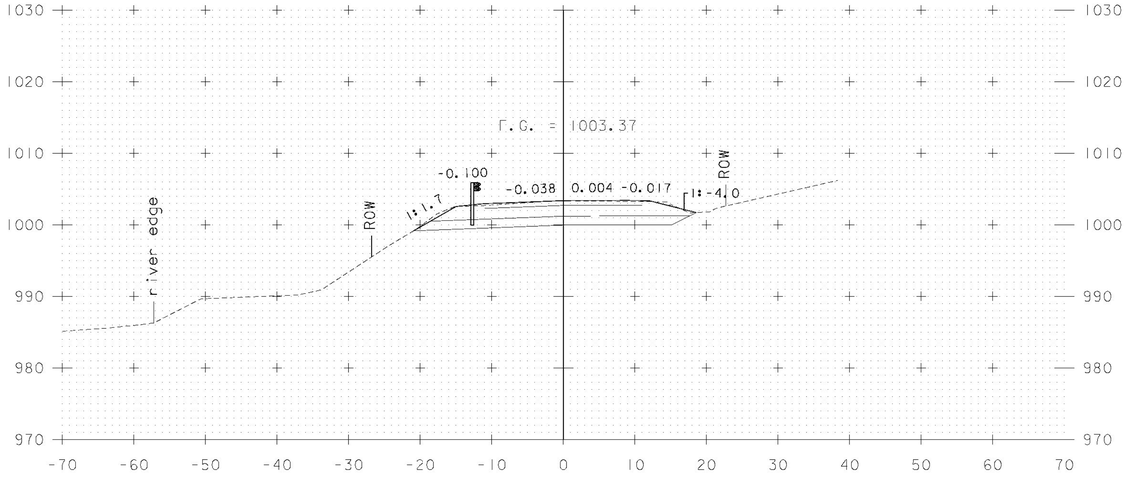


506+50

## *MAINLINE CROSS SECTIONS*
## *STA. 506+00 - STA. 506+75*

PROJECT NAME: LINCOLN

PROJECT NUMBER: BRF 0188 (8)

PARSONS BRINCKERHOFF
650 ELM STREET
MANCHESTER, NH 03101

FILE NAME: z10J066xsl.dgn
PROJECT LEADER: C.K. DONINGTON
DESIGNED BY: C CARNEY
MAINLINE CROSS SECTIONS (7)

PLOT DATE: 8-DEC-2014
DRAWN BY: C CARNEY
CHECKED BY: R BENJAMIN
SHEET 42 OF 62

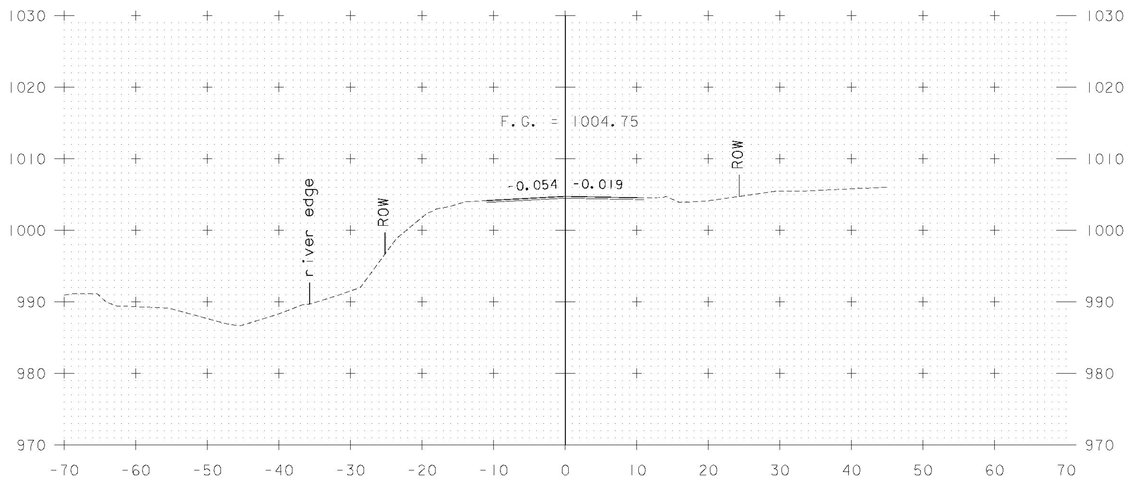


STA 507+25
END APPROACH
MATCH EXISTING GRADE AND BANKING

507+25

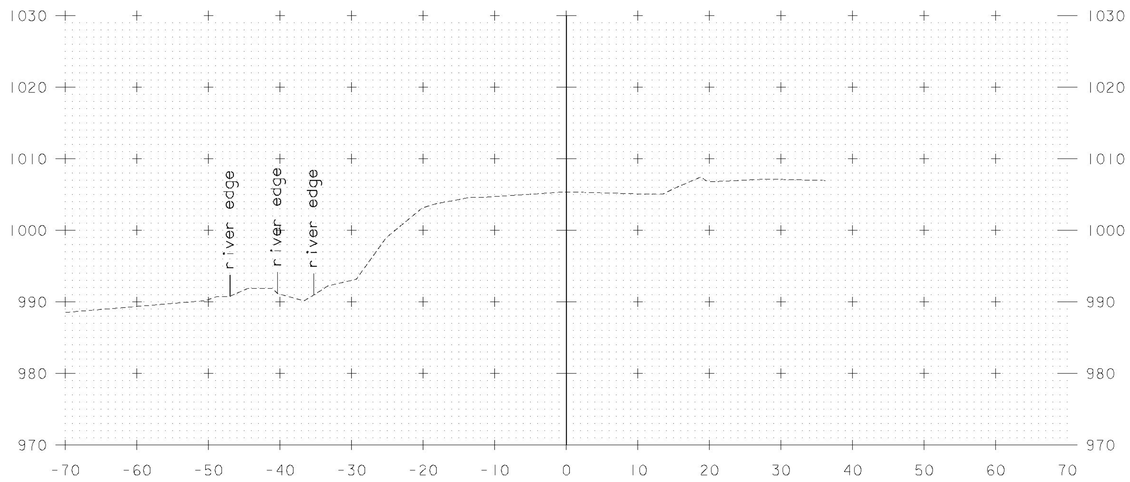


507+75

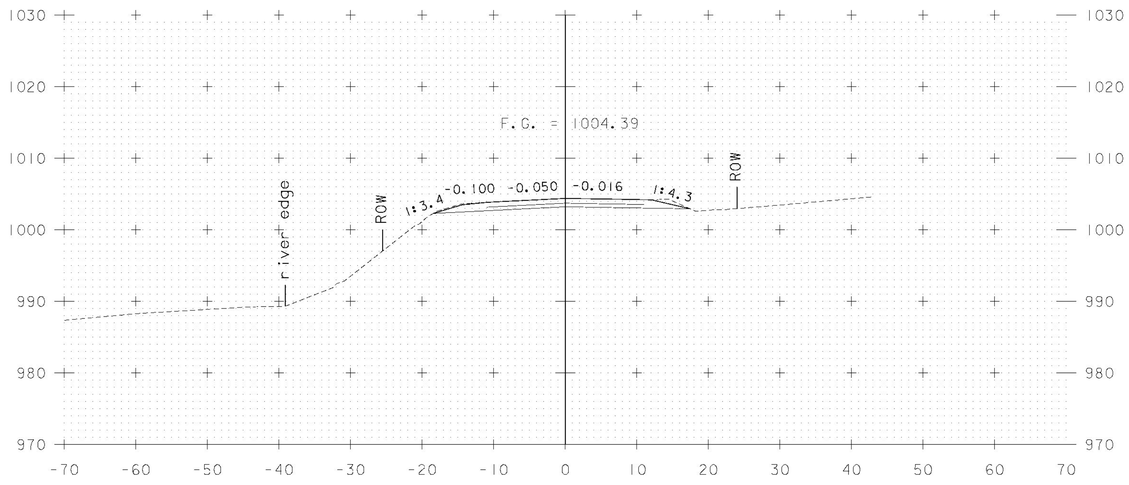


507+00

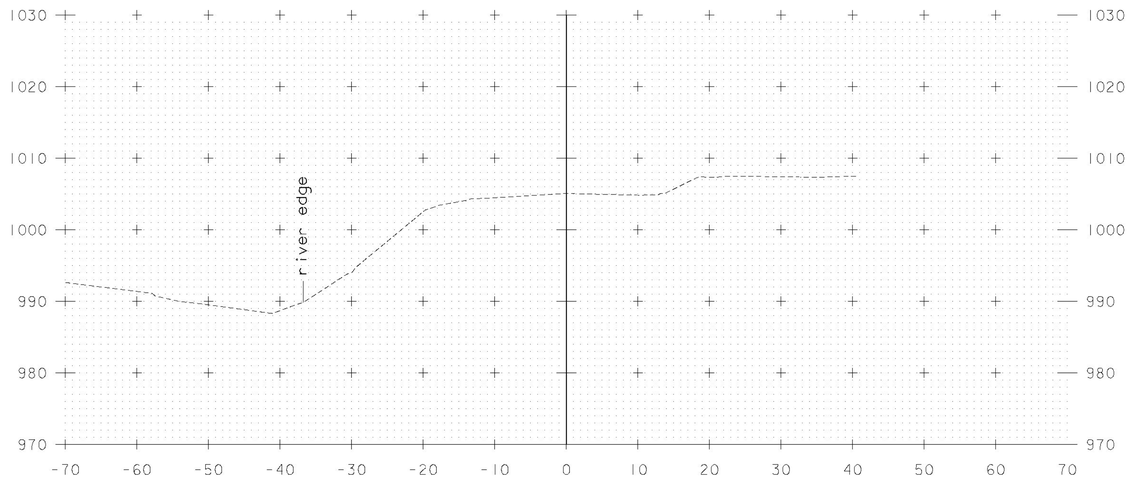


507+50

## *MAINLINE CROSS SECTIONS*
## *STA. 507+00 - STA. 507+75*

PROJECT NAME: LINCOLN
PROJECT NUMBER: BRF 0188 (8)

PARSONS BRINCKERHOFF
650 ELM STREET
MANCHESTER, NH 03101

FILE NAME: z10j066xsl.dgn
PROJECT LEADER: C.K. DONINGTON
DESIGNED BY: C CARNEY
MAINLINE CROSS SECTIONS (8)

PLOT DATE: 8-DEC-2014
DRAWN BY: C CARNEY
CHECKED BY: R BENJAMIN
SHEET 43 OF 62

# BANKING DIAGRAM

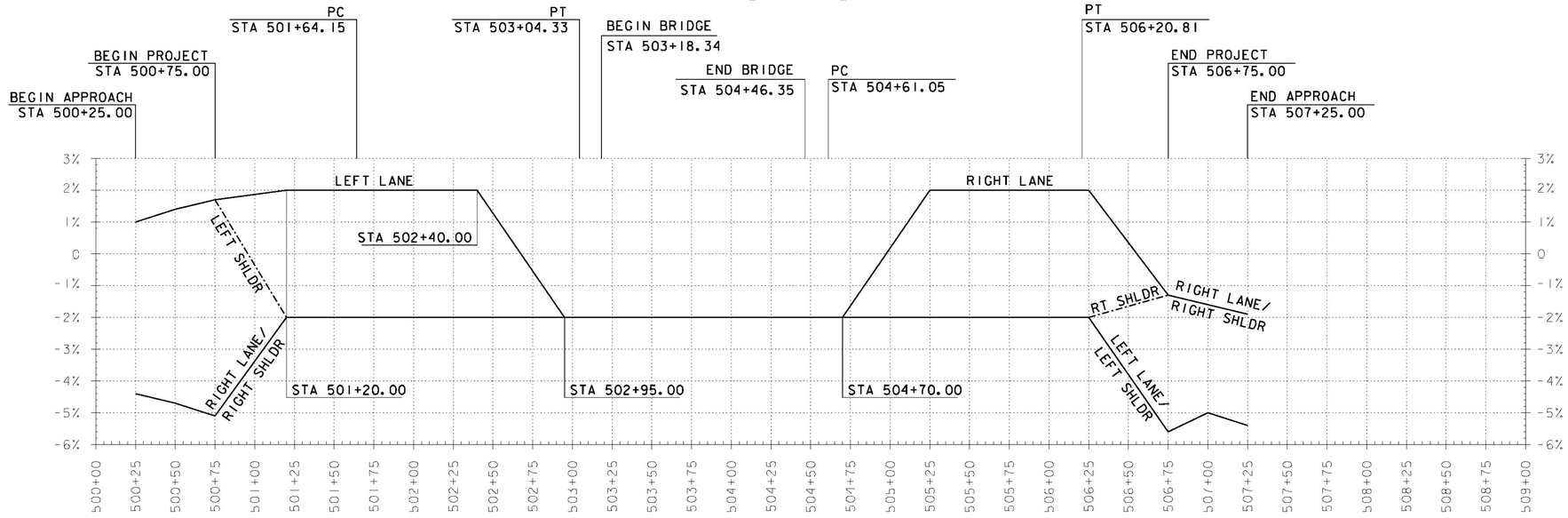


# MATERIAL TRANSITIONS

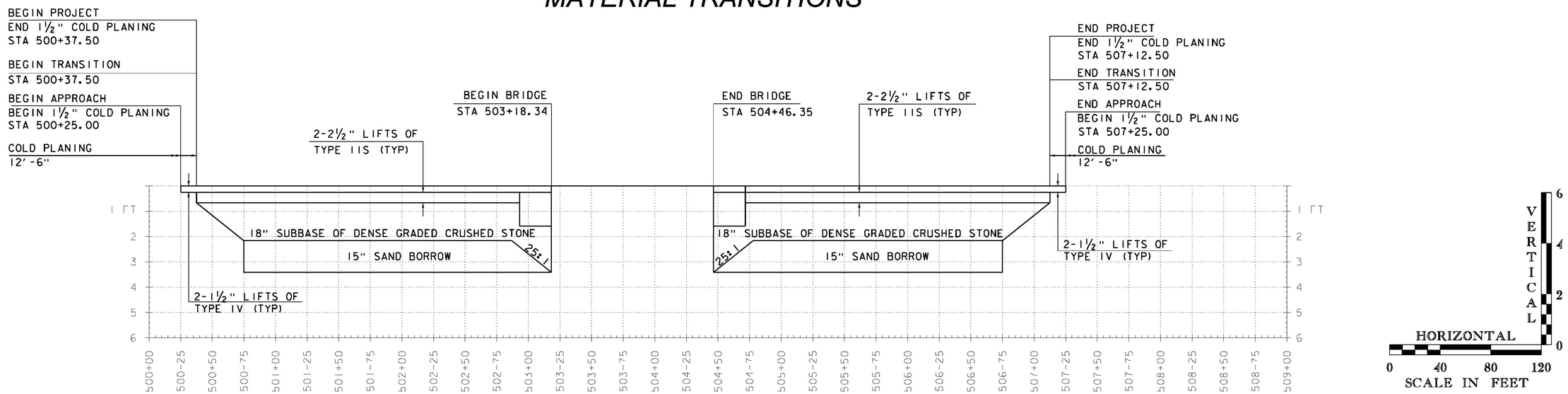





## BANKING DIAGRAM & MATERIAL TRANSITION SHEET

PROJECT NAME: LINCOLN

PROJECT NUMBER: BRF 0188 (8)


PARSONS BRINCKERHOFF
650 ELM STREET
MANCHESTER, NH 03101


FILE NAME: z10j066xs2.dgn
PROJECT LEADER: G.K. DONINGTON
DESIGNED BY: C CARNEY
BANKING DIAGRAM & MATERIAL TRANSITION

PLOT DATE: 8-DEC-2014
DRAWN BY: C CARNEY
CHECKED BY: R BENJAMIN
SHEET 44 OF 62

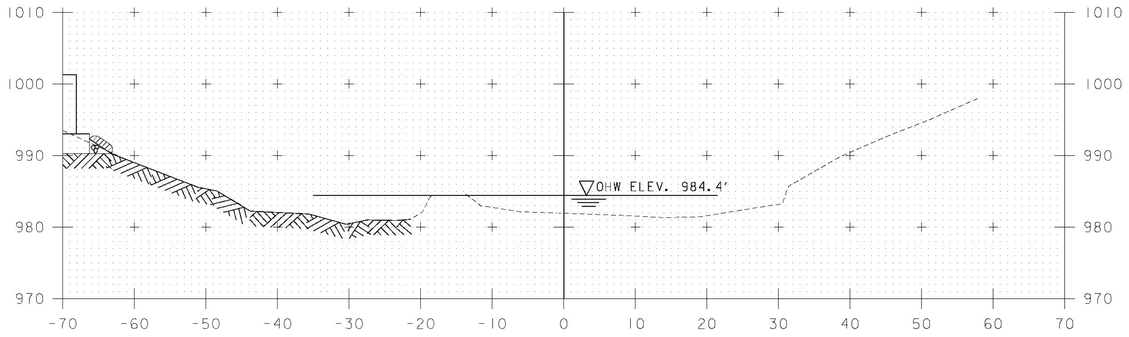


100+50

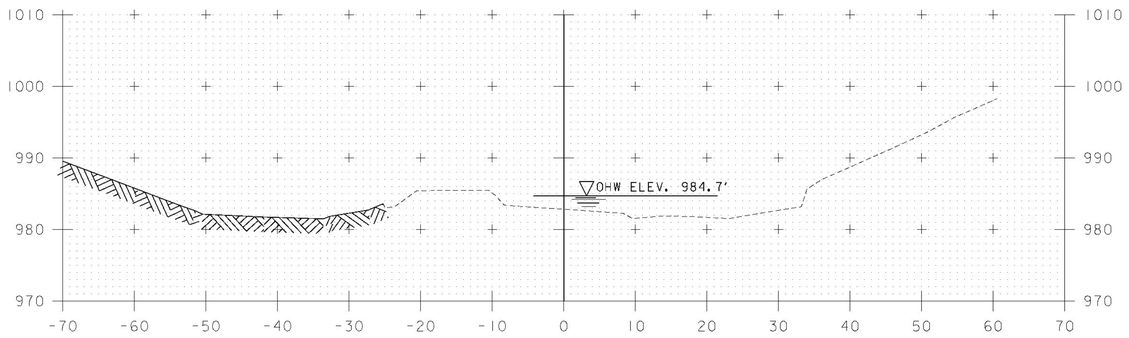


100+25

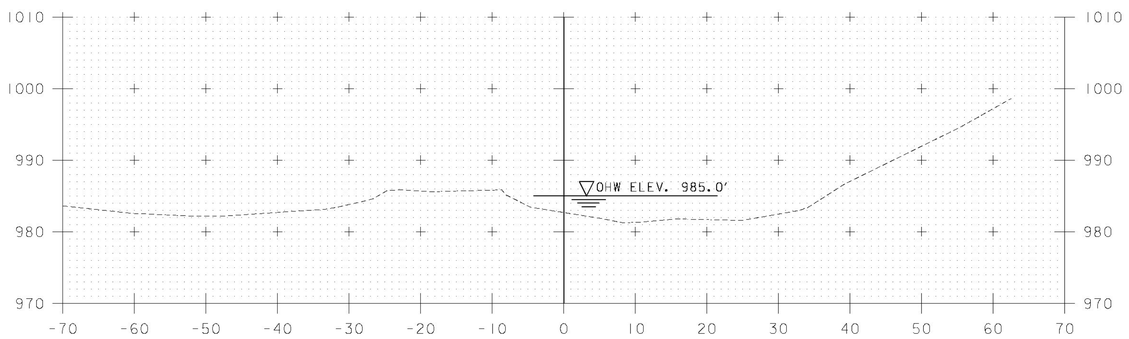


100+00

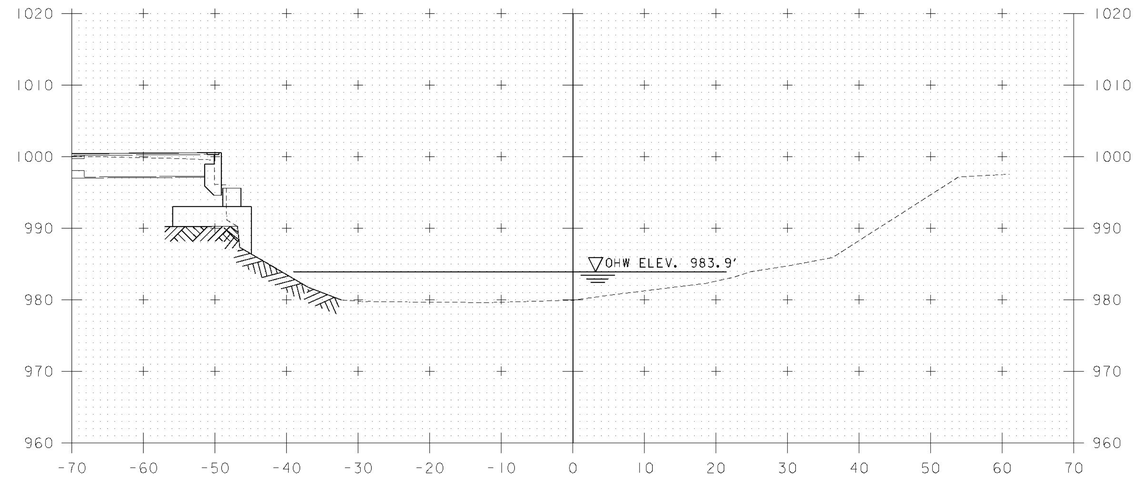


STA. 101+00 ABUTMENT #2
CONTINUE GRANULAR BACKFILL
STRUCTURE EXCAVATION

101+00

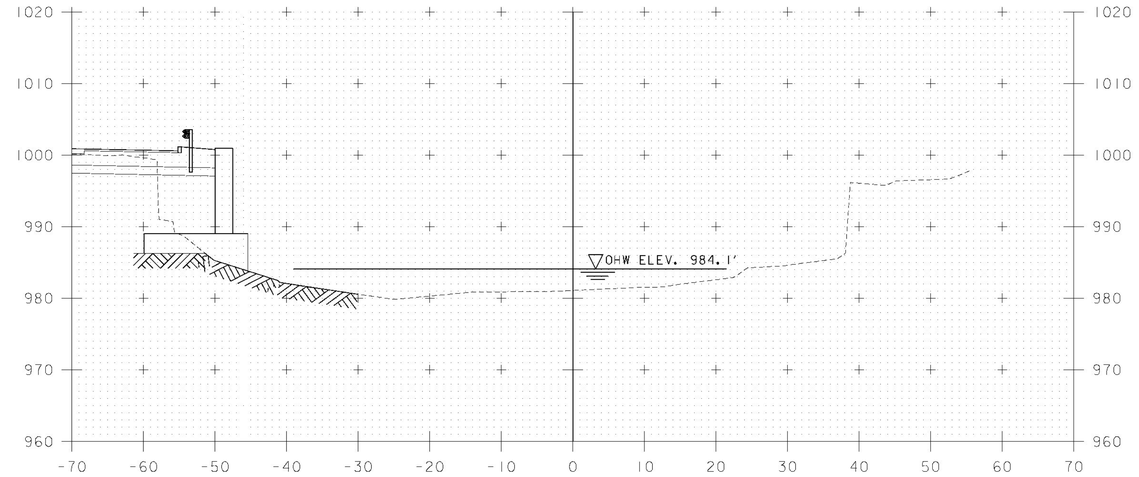


STA. 100+75 ABUTMENT #2
BEGIN GRANULAR BACKFILL
STRUCTURE EXCAVATION

100+75

## *CHANNEL CROSS SECTIONS*
## *STA. 100+00 - STA. 101+00*

PROJECT NAME: LINCOLN
PROJECT NUMBER: BRF 0188 (8)

PARSONS BRINCKERHOFF
650 ELM STREET
MANCHESTER, NH 03101

FILE NAME: z10l066xsl.dgn
PROJECT LEADER: C.K. DONINGTON
DESIGNED BY: C CARNEY
CHANNEL CROSS SECTIONS (1)

PLOT DATE: 8-DEC-2014
DRAWN BY: C CARNEY
CHECKED BY: R BENJAMIN
SHEET 45 OF 62

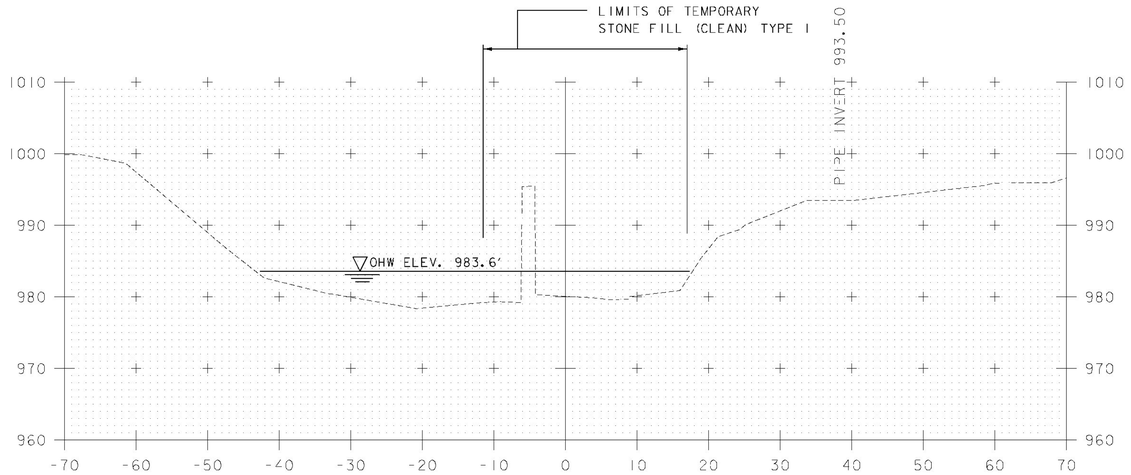


STA. 101+50 ABUTMENT #2
END GRANULAR BACKFILL
STRUCTURE EXCAVATION

## 101+50

STA. 101+50 ABUTMENT #1
BEGIN STONE FILL TYPE IV
GRANULAR BACKFILL
STRUCTURE EXCAVATION
GEOTEXTILE UNDER STONE FILL

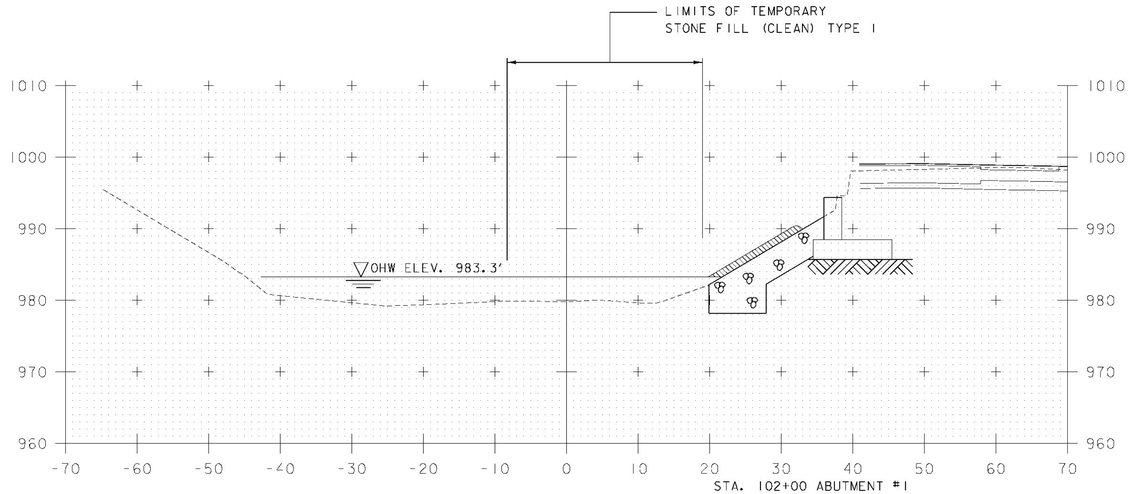


## 102+00

STA. 102+00 ABUTMENT #1
CONTINUE STONE FILL TYPE IV
GRANULAR BACKFILL
STRUCTURE EXCAVATION
GRUBBING MATERIAL
GEOTEXTILE UNDER STONE FILL

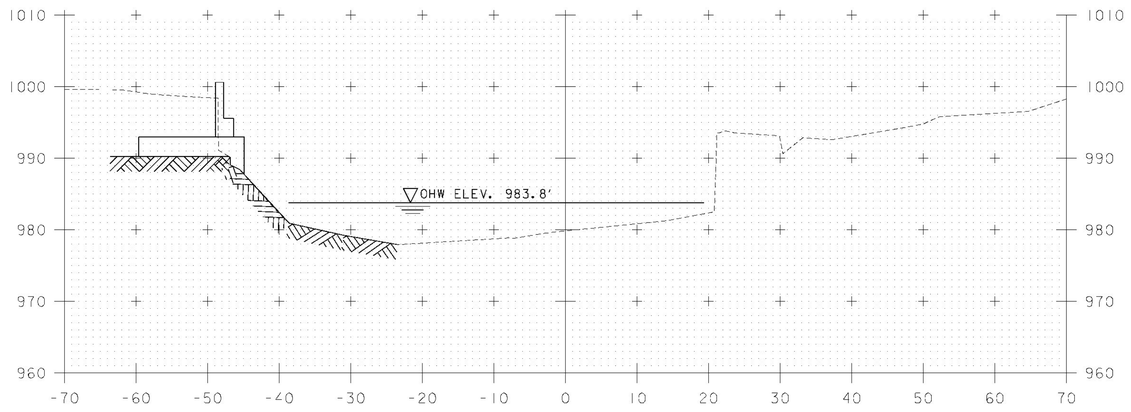


STA. 101+25 ABUTMENT #2
CONTINUE GRANULAR BACKFILL
STRUCTURE EXCAVATION

## 101+25

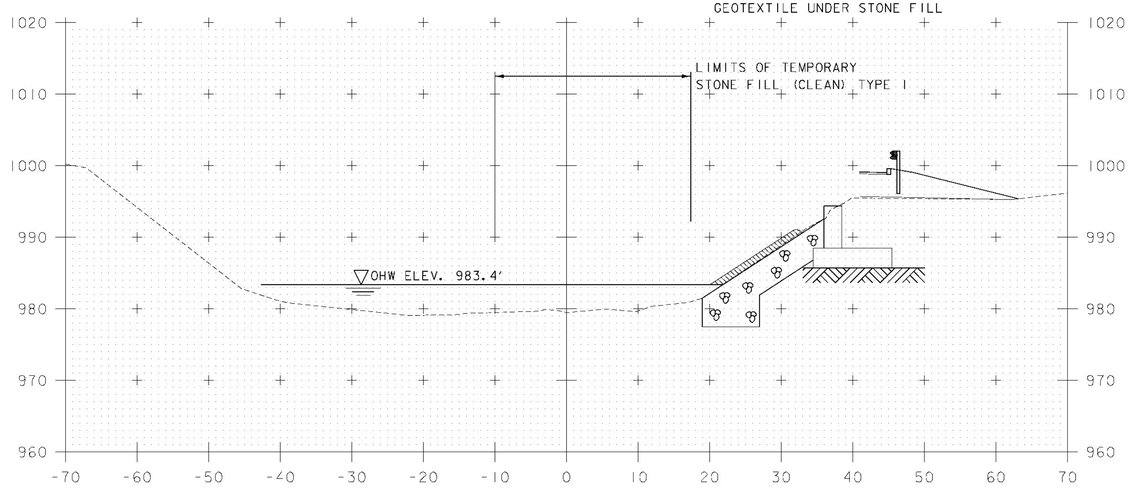


STA. 101+75 ABUTMENT #1
CONTINUE STONE FILL TYPE IV
GRANULAR BACKFILL
STRUCTURE EXCAVATION
GRUBBING MATERIAL
GEOTEXTILE UNDER STONE FILL

## 101+75

***CHANNEL CROSS SECTIONS***
***STA. 100+25 - STA. 102+00***

| | |
|---|---|
| PROJECT NAME: LINCOLN | |
| PROJECT NUMBER: BRF 0188 (8) | |
| FILE NAME: z10J066xsl.dgn | PLOT DATE: 8-DEC-2014 |
| PROJECT LEADER: G.K. DONINGTON | DRAWN BY: C CARNEY |
| DESIGNED BY: C CARNEY | CHECKED BY: R BENJAMIN |
| CHANNEL CROSS SECTIONS (2) | SHEET 46 OF 62 |

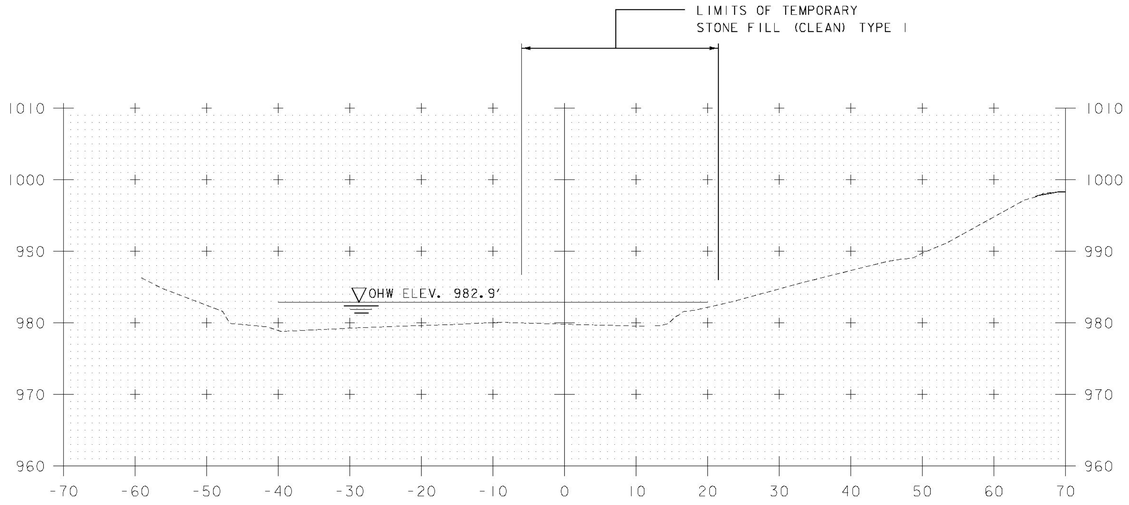


102+50

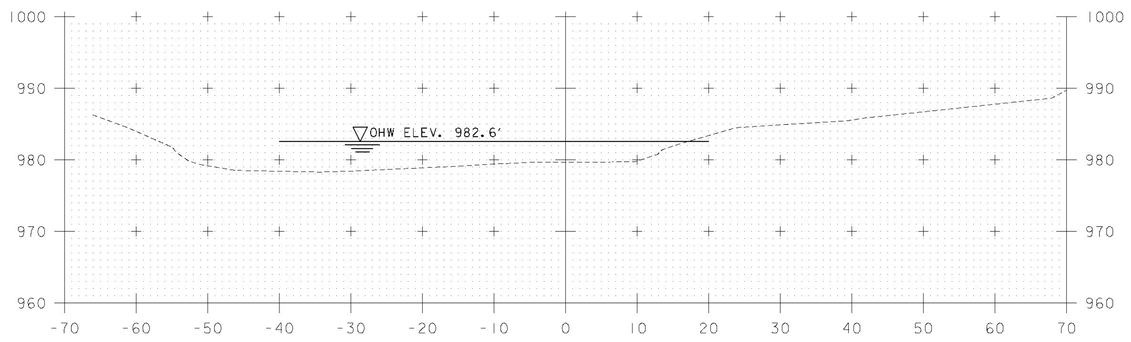


103+00

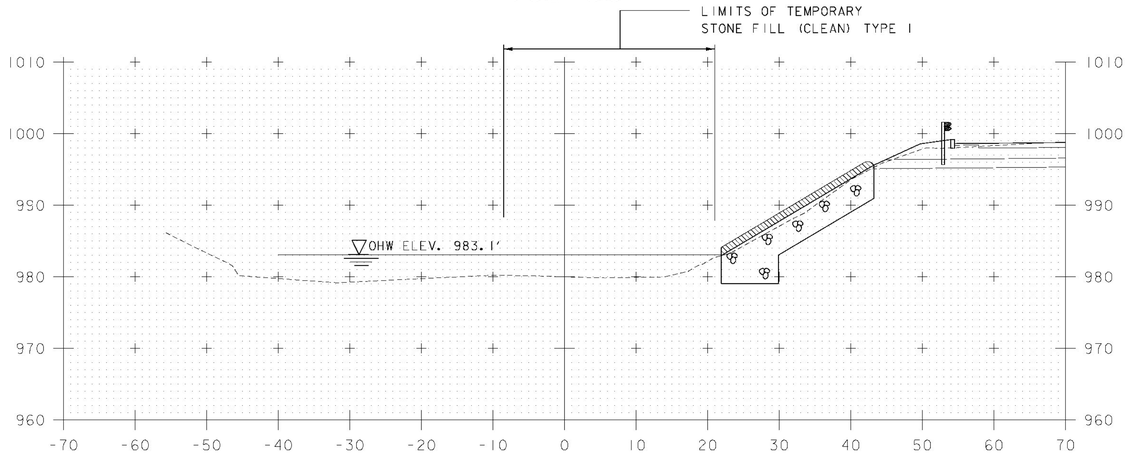


102+25

STA. 102+25 ABUTMENT #1
END STONE FILL TYPE IV
GRANULAR BACKFILL
STRUCTURE EXCAVATION
GRUBBING MATERIAL
GEOTEXTILE UNDER STONE FILL

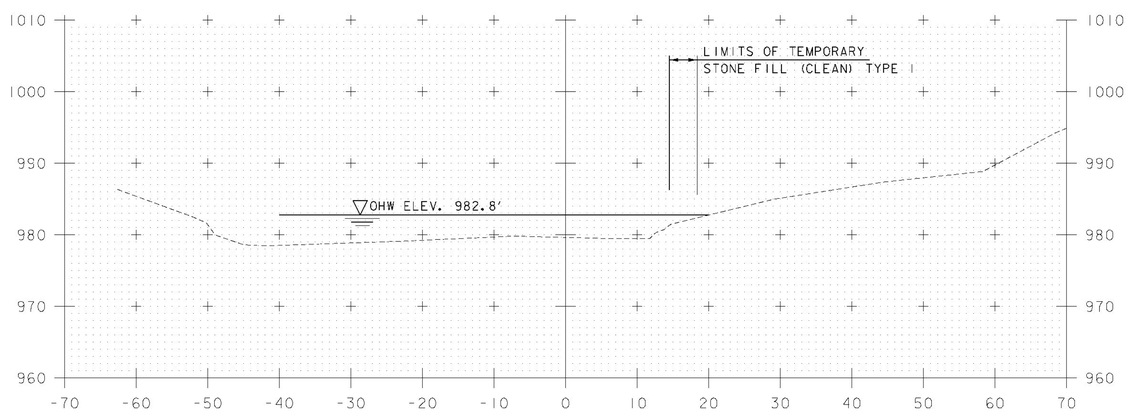


102+75

## *CHANNEL CROSS SECTIONS*
## *STA. 102+25 - STA. 103+00*

| | |
|---|---|
| PROJECT NAME: LINCOLN | |
| PROJECT NUMBER: BRF 0188 (8) | |
| FILE NAME: z10J066xsl.dgn | PLOT DATE: 8-DEC-2014 |
| PROJECT LEADER: G.K. DONINGTON | DRAWN BY: C CARNEY |
| DESIGNED BY: C CARNEY | CHECKED BY: R BENJAMIN |
| CHANNEL CROSS SECTIONS (3) | SHEET 47 OF 62 |

# EPSC PLAN NARRATIVE

## 1.1 PROJECT DESCRIPTION

THIS PROJECT INVOLVES THE REMOVAL OF A 128' - 2 SPAN BRIDGE. THE BRIDGE WILL BE REPLACED WITH A PRECAST 120' SPAN OVER THE NEW HAVEN RIVER, ON NEW FOOTINGS ALONG A SIMILAR ALIGNMENT. THE BRIDGE IS LOCATED IN THE TOWN OF LINCOLN, ON TH #1, APPROXIMATELY 0.5 MILE SOUTH OF THE TOWN CENTER.

NOTE: AREA OF DISTURBANCE INCLUDES LIMITS OF EARTH DISTURBANCE WITHIN THE PROJECT AREA, AS WELL AS WASTE, BORROW, AND OTHER EARTH DISTURBING ACTIVITIES WITHIN OR DIRECTLY ADJACENT TO THE PROJECT LIMITS AS SHOWN ON THE ATTACHED EPSC PLAN.

TOTAL AREA OF DISTURBANCE AS SHOWN ON THE ATTACHED EPSC PLAN IS APPROXIMATELY 1.06 ACRES.

IT IS ANTICIPATED THAT THIS PROJECT WILL LAST ONE CONSTRUCTION SEASON.

## 1.2 SITE INVENTORY

### 1.2.1 TOPOGRAPHY

THE TOPOGRAPHY OF THE AREA IS MOSTLY WELL ESTABLISHED FOREST WITH OCCASIONAL OPEN AREAS. THERE ARE RESIDENTIAL DWELLINGS ON THE NORTHWEST AND SOUTH WEST PROPERTIES OF THE BRIDGE. THESE PROPERTIES HAVE LAWN AREAS. TOWN HIGHWAY #1 AND A GRAVEL DRIVEWAY ARE WITHIN THE PROJECT SITE. THERE IS EXPOSED LEDGE ON THE SOUTH SIDE OF THE RIVER IN THE VICINITY OF THE ABUTMENTS AND WINGWALLS.

### 1.2.2 DRAINAGE, WATERWAYS, BODIES OF WATER, AND PROXIMITY TO NATURAL OR MAN-MADE WATER FEATURES

THE NEW HAVEN RIVER IS THE ONLY WATER SOURCE ON THE PROJECT SITE. THE RIVER IS CLASSIFIED AS SEMI-ALLUVIAL, STRAIGHT AND NOT BRAIDED OR UNABRANCHED. THE STREAMBED IS MADE UP PRIMARILY OF COBBLESTONES. THE BANKS ALONG BOTH SIDES OF THE RIVER BOTH UPSTREAM AND DOWNSTREAM ARE HIGH AND APPEAR TO BE STABLE. THE TRIBUTARY AREA AT THE BRIDGE CROSSING IS 28 MILES$^2$. THERE ARE TWO CROSS PIPES ON SITE DRAINING FROM THE ROADWAY TO THE RIVER. DUE TO THE NATURE OF THE SURROUNDING TERRAIN THE PROJECT SITE COULD RECEIVE RUNOFF WATER FROM A FEW NEARBY SLOPES.

### 1.2.3 VEGETATION

THE VEGETATION IN THE PROJECT AREA CONSISTS OF HARDWOOD TREES AND UNDERGROWTH. THE IMPACT TO VEGETATION WILL BE LIMITED TO THAT WHICH IS DIRECTLY AFFECTED BY REPLACEMENT OF THE EXISTING BRIDGE. UPON PROJECT COMPLETION, THE CHANNEL WILL BE ARMORED WITH STONE FILL TYPE IV AS SPECIFIED ON THE PLANS.DISTURBED VEGETATION WILL BE REESTABLISHED WITH STANDARD SEED AND MULCH PRACTICES.

### 1.2.4 SOILS

ALL SOIL DATA CAME FROM THE U.S. DEPARTMENT OF AGRICULTURE SOIL CONSERVATION SERVICE:

LE - LIMERICK SILT LOAM (K= 0.37), HIGHLY ERODIBLE

BEC - BERKSHIRE AND MARLOW STONY LOAMS, 12 TO 25 PERCENT SLOPES. (K= 0.28), MODERATELY ERODIBLE

DAB - DUANE FINE SANDY LOAM, 5 TO 12 PERCENT SLOPES (K= 0.20), NOT HIGHLY ERODIBLE

**NOTE**: K-VALUES GENERALLY INDICATE THE FOLLOWING:
0.0-0.23 = LOW EROSION POTENTIAL
0.24-0.36 = MODERATE EROSION POTENTIAL
0.37 AND HIGHER = HIGH EROSION POTENTIAL

### 1.2.5 SENSITIVE RESOURCE AREAS

CRITICAL HABITATS: NO
HISTORICAL OR ARCHEOLOGICAL AREAS: EXISTING DRY LAID STONE FOUNDATIONS TO BE AVOIDED IF POSSIBLE
PRIME AGRICULTURAL LAND: NO
THREATENED AND ENDANGERED SPECIES: NO
WATER RESOURCE: NEW HAVEN RIVER
WETLANDS: NO

## 1.3 RISK EVALUATION

THIS PROJECT FALLS UNDER THE JURISDICTION OF GENERAL PERMIT 3-9020 FOR STORMWATER RUNOFF FROM CONSTRUCTION SITES FOR LOW RISK PROJECTS. ANY MODIFICATIONS TO THE PROJECT THAT INCREASE THE RISK TO ENVIRONMENTAL RESOURCES SHALL BE EVALUATED IN ACCORDANCE WITH THE PERMIT REQUIREMENTS. THE CONTRACTOR WILL BE RESPONSIBLE FOR ANY ADDITIONAL PERMITTING.

## 1.4 EROSION PREVENTION AND SEDIMENT CONTROL

THE EROSION CONTROL PLANS ARE MEANT AS A GUIDELINE FOR PREVENTING EROSION AND CONTROLLING SEDIMENT TRANSPORT. THE PRINCIPLES OUTLINED IN THIS NARRATIVE CONSIST OF APPLYING MEASURES THROUGHOUT CONSTRUCTION OF THE PROJECT IN ORDER TO MINIMIZE SEDIMENT TRANSPORT TO THE RECEIVING WATERS. THE MEASURES INCLUDE STABILIZATION AND STRUCTURAL PRACTICES, STORM WATER CONTROLS AND OTHER POLLUTION PREVENTION PRACTICES. THEY HAVE BEEN PROPOSED BY THE DESIGNER AS A BASIS FOR PROTECTING RESOURCES AND WILL NEED TO BE BUILT UPON BASED ON THE SPECIFIC MEANS AND METHODS OF THE CONTRACTOR. REFER TO THE LOW RISK SITE HANDBOOK AND APPROPRIATE DETAIL SHEETS FOR SPECIFIC GUIDANCE AND CONSTRUCTION DETAILING.

ALL MEASURES SHALL BE REGULARLY MAINTAINED AND SHALL BE CHECKED FOR SEDIMENT BUILD-UP. SEDIMENT SHALL BE DISPOSED OF AT AN APPROVED SITE WHERE IT WILL NOT BE SUBJECT TO EROSION.

### 1.4.1 MARK SITE BOUNDARIES

SITE BOUNDARIES AND AREAS CONSTRUCTION EQUIPMENT CAN ACCESS SHALL BE DELINEATED.

PROJECT DEMARCATION FENCING (PDF) SHALL BE USED TO PHYSICALLY MARK SITE BOUNDARIES.

### 1.4.2 LIMIT DISTURBANCE AREA

PREVENTING INITIAL SOIL EROSION BY MINIMIZING THE EXPOSED AREA IS MUCH MORE EFFECTIVE THAN TREATING ERODED SEDIMENT. EARTH DISTURBANCE CAN BE MINIMIZED THROUGH CONSTRUCTION PHASING BY ONLY OPENING UP EARTH AS NECESSARY. THIS CAN LIMIT THE AREA THAT WILL BE DISTURBED AND EXPOSED TO EROSION. EMPLOY TEMPORARY CONSTRUCTION STABILIZATION PRACTICES IN INCREMENTAL STAGES AS PHASES CHANGE. FOR PROJECTS WHICH FALL UNDER THE CONSTRUCTION GENERAL PERMIT, ONLY THE ACREAGE LISTED ON THE PERMIT AUTHORIZATION MAY BE EXPOSED AT ANY GIVEN TIME.

MAINTAINING VEGETATED BUFFERS ALONG STREAM BANKS, WETLANDS OR OTHER SENSITIVE AREAS IS A CRUCIAL EROSION AND SEDIMENT CONTROL MEASURE THAT SHOULD BE ESTABLISHED WHEREVER POSSIBLE.

### 1.4.3 SITE ENTRANCE/EXIT STABILIZATION

TRACKING OF SEDIMENT ONTO PUBLIC HIGHWAYS SHALL BE MINIMIZED TO REDUCE THE POTENTIAL FOR RUNOFF ENTERING RECEIVING WATERS. INSTALLATION SHALL COINCIDE WITH THE CONTRACTOR PROGRESS SCHEDULE.

STABILIZED CONSTRUCTION ENTRANCES SHALL BE INSTALLED AS PROPOSED ON THE EPSC PLAN AND ANYWHERE EQUIPMENT WILL BE GOING FROM AREAS OF EXPOSED SOILS TO PAVED SURFACES.

### 1.4.4 INSTALL SEDIMENT BARRIERS

SEDIMENT BARRIERS SHALL BE UTILIZED TO INTERCEPT RUNOFF AND ALLOW SUSPENDED SEDIMENT TO SETTLE OUT. THEY SHALL BE INSTALLED PRIOR TO ANY UP SLOPE WORK.

SILT FENCE WILL BE INSTALLED AS PROPOSED ON THE EPSC PLAN.

### 1.4.5 DIVERT UPLAND RUNOFF

DIVERSIONARY MEASURES SHALL BE USED TO INTERCEPT RUNOFF FROM ABOVE THE CONSTRUCTION AND DIRECT IT AROUND THE DISTURBED AREA SO THAT CLEAN WATER DOES NOT BECOME MUDDIED WHILE TRAVELING OVER EXPOSED SOILS ON THE CONSTRUCTION SITE.

THE PROJECT AREA IS RELATIVELY FLAT. THERFORE IT IS NOT ANTICPIATED THAT DIVERSION MEASURES WILL BE NECESSARY.

### 1.4.6 SLOW DOWN CHANNELIZED RUNOFF

CHECK STRUCTURES SHALL BE UTILIZED TO REDUCE THE VELOCITY, AND THUS THE EROSIVE POTENTIAL, OF CONCENTRATED FLOW IN CHANNELS.

THE USE OF STONE CHECK DAMS IS NOT ANTICIPATED ON THIS PROJECT.

### 1.4.7 CONSTRUCT PERMANENT CONTROLS

PERMANENT STORMWATER TREATMENT DEVICES SHALL BE INSTALLED AS SHOWN ON THE PLANS AND IN ACCORDANCE WITH PERMIT CONDITIONS.

THE USE OF PERMANENT STORMWATER TREATMENT DEVICES IS NOT ANTICIPATED FOR THIS PROJECT.

### 1.4.8 STABILIZE EXPOSED SOILS DURING CONSTRUCTION

ALL AREAS OF DISTURBANCE MUST HAVE TEMPORARY STABILIZATION IN PLACE WITHIN 48 HOURS OF DISTURBANCE OR IN ACCORDANCE WITH THE CONSTRUCTION GENERAL PERMIT 3-9020 AUTHORIZATION.

SURFACE ROUGHENING OF ALL EXPOSED SLOPES, COMBINED WITH TEMPORARY MULCHING, SHALL BE UTILIZED ON A REGULAR BASIS. BIODEGRADABLE EROSION CONTROL MATTING OR AN EQUIVALENT SHALL BE USED TO STABILIZE ALL SLOPES STEEPER THAN 1:3.

THE FORECAST OF RAINFALL EVENTS SHALL TRIGGER IMMEDIATE PROTECTION OF EXPOSED SOILS.

### 1.4.9 WINTER STABILIZATION

VARIOUS MEASURES SPECIFIC TO WINTER MAY BE NECESSARY SHOULD THE PROJECT EXTEND INTO WINTER (OCTOBER 15 THROUGH APRIL 15). REFER TO THE LOW RISK SITE HANDBOOK FOR GUIDANCE.

### 1.4.10 STABILIZE SOIL AT FINAL GRADE

EXPOSED SOIL MUST BE STABILIZED WITHIN 48 HOURS OF REACHING FINAL GRADE.

SEED, MULCH, FERTILIZER AND LIME SHALL BE USED TO ESTABLISH PERMANENT VEGETATION. FOR SLOPES STEEPER THAN 1:3, BIODEGRADABLE EROSION CONTROL MATTING OR AN EQUIVALENT SHALL BE USED INSTEAD OF MULCH.

### 1.4.11 DE-WATERING ACTIVITIES

DISCHARGE FROM DEWATERING ACTIVITIES THAT FLOWS OFF OF THE CONSTRUCTION SITE MUST NOT CAUSE OR CONTRIBUTE TO A VIOLATION OF THE VERMONT WATER QUALITY STANDARDS.

DEWATERING IS NOT ANTICIPATED FOR THIS PROJECT. IF DEWATERING IS NECESSARY THE SPECIFIC MEANS FOR TREATMENT OF DISCHARGE SHALL BE PROVIDED BY THE CONTRACTOR.

### 1.4.12 INSPECT YOUR SITE

INSPECT THE PROJECT SITE BASED ON SPECIAL PROVISION REQUIREMENTS OR CONSTRUCTION GENERAL PERMIT AUTHORIZATION STIPULATIONS.

## 1.5 SEQUENCE AND STAGING

THIS SECTION WILL BE DEVELOPED BY THE CONTRACTOR USING THE GUIDANCE OUTLINED IN THE VTRANS EPSC PLAN CONTRACTOR CHECKLIST.

### 1.5.1 OFF-SITE ACTIVITIES

IN ADDITION TO THE CONTRACTOR CHECKLIST ANY ACTIVITIES OUTSIDE THE CONSTRUCTION LIMITS SHALL FOLLOW SUBSECTIONS 105.25- 105.29 OF THE STANDARD SPECIFICATIONS FOR CONSTRUCTION.

PARSONS BRINCKERHOFF
650 ELM STREET
MANCHESTER, NH 03101

PROJECT NAME: LINCOLN
PROJECT NUMBER: BRF 0188 (8)

FILE NAME: z10j066notes.dgn
PROJECT LEADER: G.K. DONINGTON
DESIGNED BY: A. STOCKIN
EPSC PLAN NARRATIVE

PLOT DATE: 8-DEC-2014
DRAWN BY: P. ARMANO
CHECKED BY: A. STOCKIN
SHEET 48 OF 62

N

VT STATE PLANE GRID

**JACKSON, WILLARD T.**

| SOIL INFORMATION |
|---|
| Le<br>LIMERICK SILT LOAM<br>HYDROLOGIC SOIL-<br>GROUP C |

BEGIN BRIDGE
STA 503+18.34

END BRIDGE
STA 504+46.35

503+00

504+00

505+00

502+00

501+00

500+00

TH 1 TO WEST LINCOLN

EXISTING ROW

EXISTING ROW

BEGIN PROJECT
STA 500+75.00

BEGIN APPROACH
STA 500+25.00

LAWN

HARDWOOD TREES AND BRUSH

HARDWOOD TREES AND BRUSH

EXISTING DRIVE

MHO

NEW HAVEN RIVER

MATCHLINE STA. 505+50

**TRUCHON, EVAN M. & LISA R.**

**HUTCHINGS, ROY**

**TRUCHON,EVAN M. & LISA R.**

| SOIL INFORMATION |
|---|
| Le<br>LIMERICK SILT LOAM<br>HYDROLOGIC SOIL-<br>GROUP C |

**HARTMAN, ERIC & REABER-SPINA, SARAH**

LEGEND

| | |
|---|---|
| — AER E&T — | AERIAL ELECTRIC & TELEPHONE |
| ---------- | SOIL BOUNDARY |
| ---------- | WETLAND BUFFER ZONE |
| ARCH ———— | ARCHEOLOGICAL RESOURCES |
| ——— OHW ——— | ORDINARY HIGH WATER |

SCALE 1" = 20'-0

20 0 20

PARSONS BRINCKERHOFF
650 ELM STREET
MANCHESTER, NH 03101

PROJECT NAME: LINCOLN
PROJECT NUMBER: BRF 0188 (8)

FILE NAME: z10j066exsitebdr.dgn
PROJECT LEADER: G.K. DONINGTON
DESIGNED BY: C. CARNEY
EPSC EXISTING CONDITIONS SITE PLAN (1)

PLOT DATE: 8-DEC-2014
DRAWN BY: C. CARNEY
CHECKED BY: R. BENJAMIN
SHEET 49 OF 62

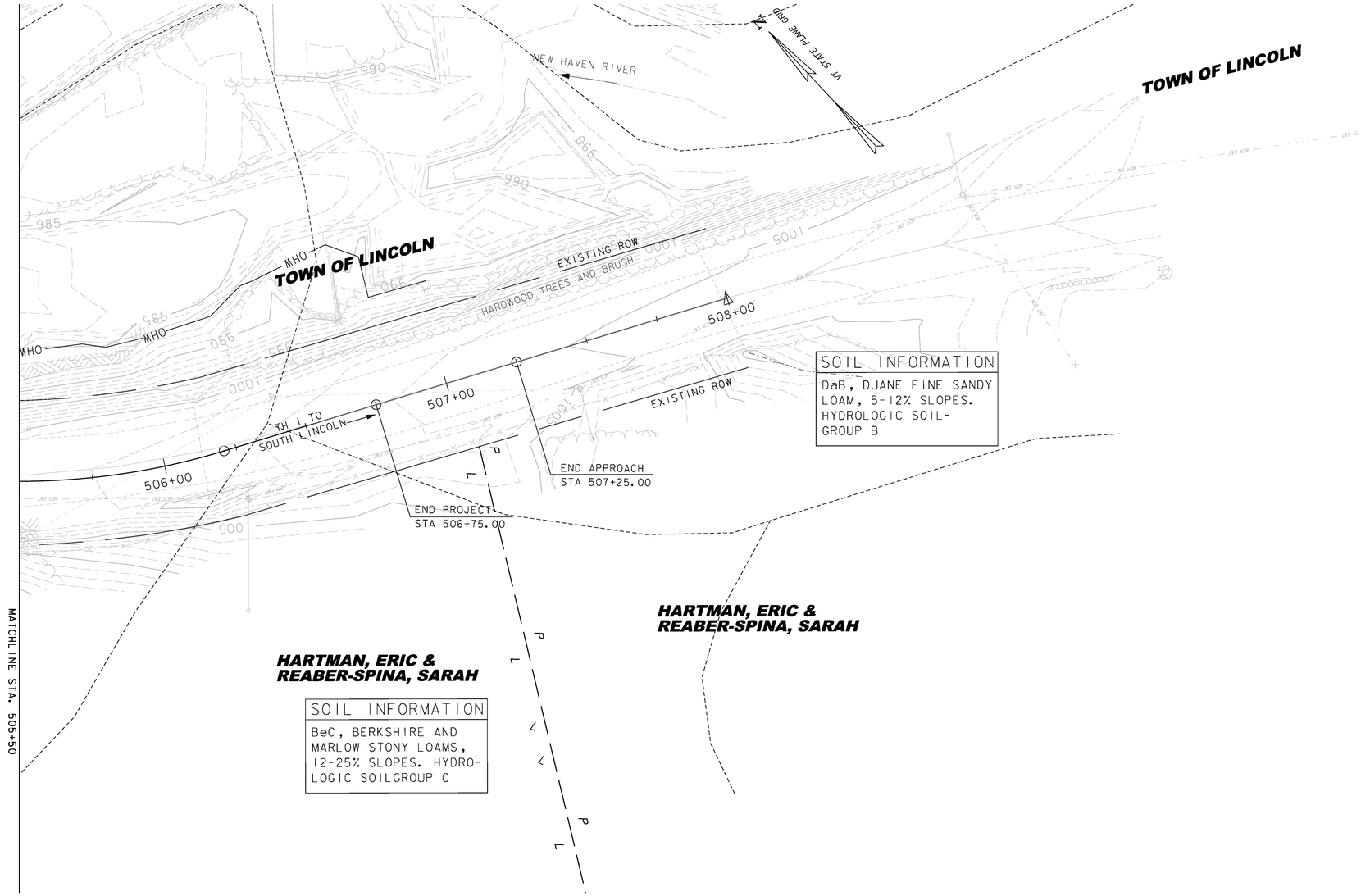


LEGEND

| | |
|---|---|
| — AER E&T — | AERIAL ELECTRIC & TELEPHONE |
| ---------- | SOIL BOUNDARY |
| ---------- | WETLAND BUFFER ZONE |
| ARCH ———— | ARCHEOLOGICAL RESOURCES |
| ——— OHW ——— | ORDINARY HIGH WATER |

SCALE 1" = 20'-0

20 0 20

PARSONS BRINCKERHOFF
650 ELM STREET
MANCHESTER, NH 03101

PROJECT NAME: LINCOLN
PROJECT NUMBER: BRF 0188 (8)

FILE NAME: z10J066exsitebdr.dgn
PROJECT LEADER: G.K. DONINGTON
DESIGNED BY: C. CARNEY
EPSC EXISTING CONDITIONS SITE PLAN (2)

PLOT DATE: 8-DEC-2014
DRAWN BY: C. CARNEY
CHECKED BY: R. BENJAMIN
SHEET 50 OF 62

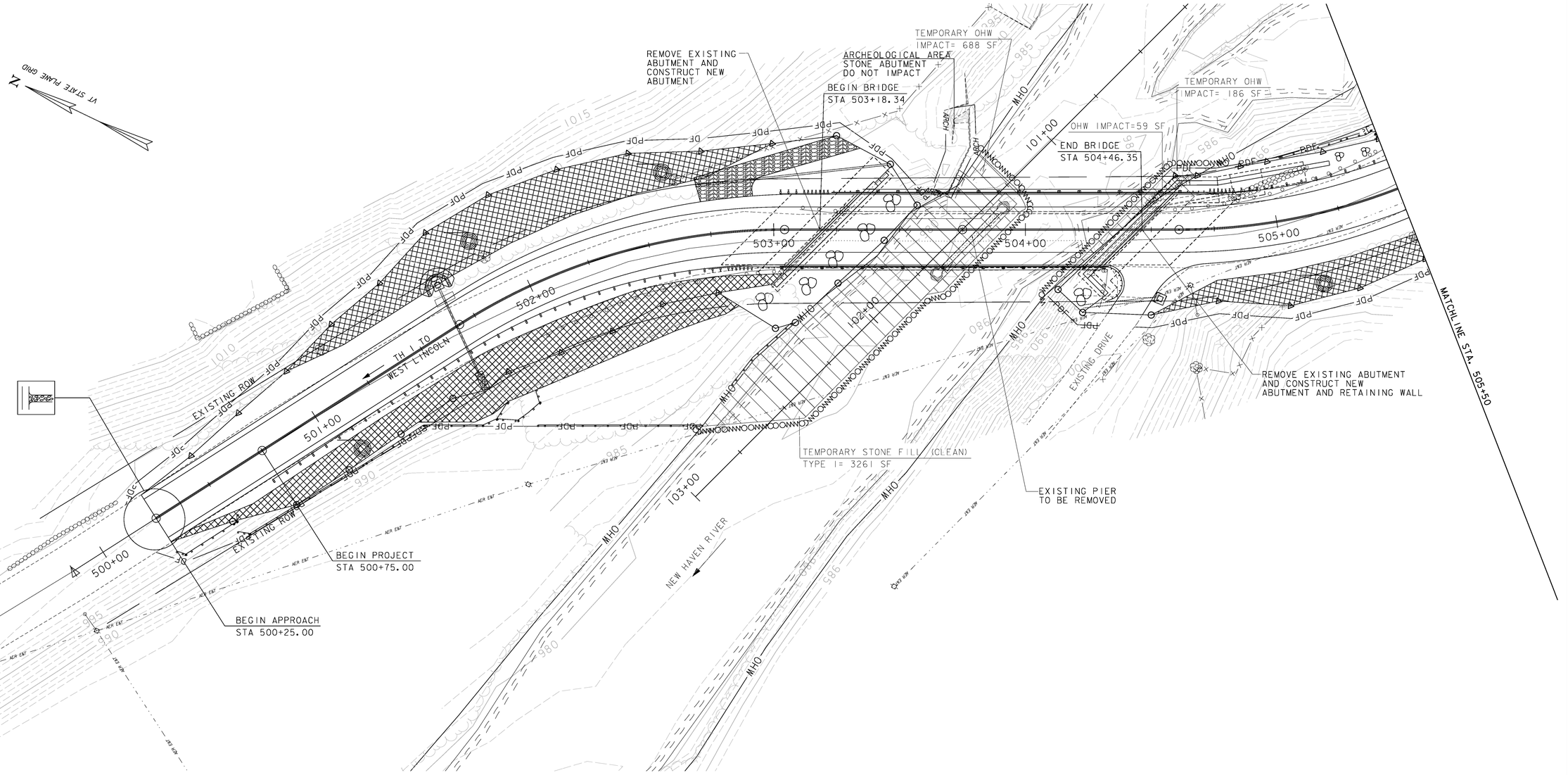


LEGEND

ARCH —— ARCHEOLOGICAL AREA

ROLLED EROSION CONTROL PRODUCT (RECP)

STABILIZED CONSTRUCTION ENTRANCE

PIPE INLET PROTECTION

CONTOURS SHOWN ARE EXISTING.
SEE CROSS SECTIONS FOR PROPOSED GRADING.
SEE SHEET 6 FOR ADDITIONAL EPSC LEGEND SYMBOLOGY.

SCALE 1" = 20'-0
20 0 20

PARSONS BRINCKERHOFF
650 ELM STREET
MANCHESTER, NH 03101

PROJECT NAME: LINCOLN
PROJECT NUMBER: BRF 0188 (8)

FILE NAME: z10J066erobdr.dgn
PROJECT LEADER: G.K. DONINGTON
DESIGNED BY: C. CARNEY
EPSC CONSTRUCTION CONDITIONS SITE PLAN (1)

PLOT DATE: 8-DEC-2014
DRAWN BY: C. CARNEY
CHECKED BY: R. BENJAMIN
SHEET 51 OF 62

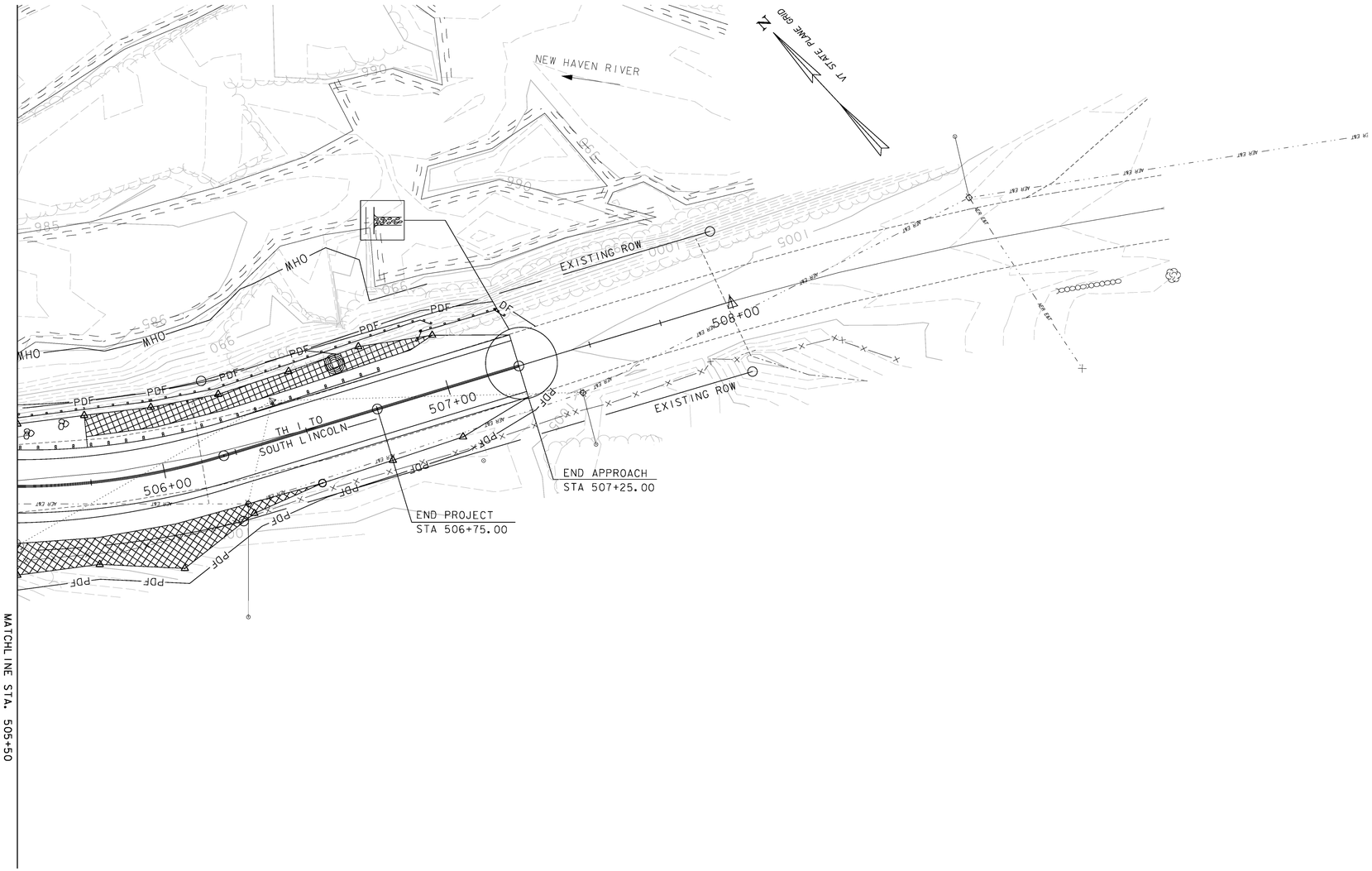


LEGEND

ARCH ——— ARCHEOLOGICAL AREA

ROLLED EROSION CONTROL PRODUCT (RECP)

STABILIZED CONSTRUCTION ENTRANCE

CONTOURS SHOWN ARE EXISTING.
SEE CROSS SECTIONS FOR PROPOSED GRADING.
SEE SHEET 6 FOR ADDITIONAL EPSC LEGEND SYMBOLOGY.

SCALE 1" = 20'-0
20 0 20

PARSONS BRINCKERHOFF
650 ELM STREET
MANCHESTER, NH 03101

PROJECT NAME: LINCOLN
PROJECT NUMBER: BRF 0188 (8)

FILE NAME: z10J066erobdr.dgn
PROJECT LEADER: G.K. DONINGTON
DESIGNED BY: C. CARNEY
EPSC CONSTRUCTION CONDITIONS SITE PLAN (2)

PLOT DATE: 8-DEC-2014
DRAWN BY: C. CARNEY
CHECKED BY: R. BENJAMIN
SHEET 52 OF 62

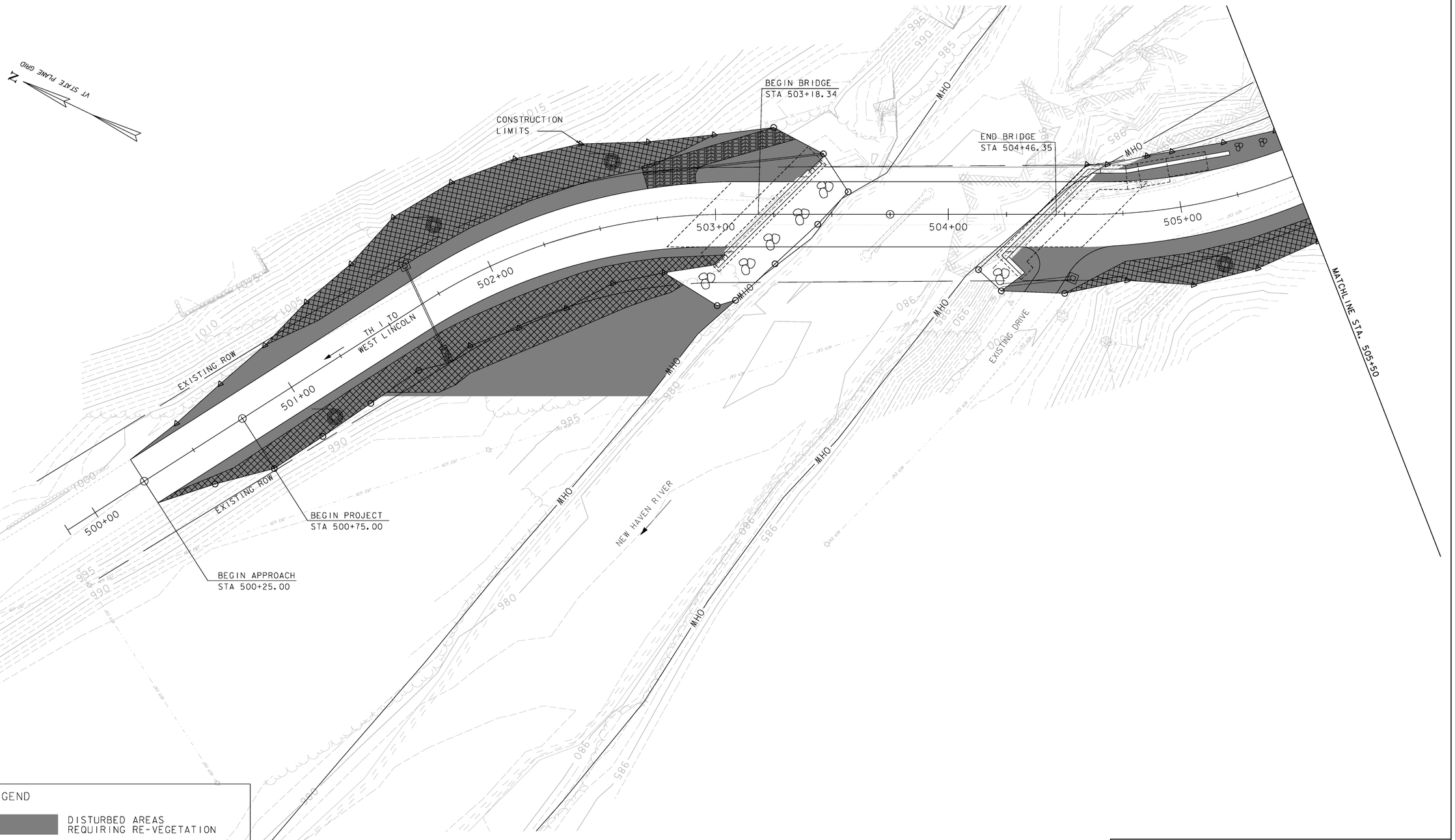


CONTOURS SHOWN ARE EXISTING.
SEE CROSS SECTIONS FOR PROPOSED GRADING.
SEE SHEET 6 FOR ADDITIONAL EPSC LEGEND SYMBOLOGY.

SCALE 1" = 20'-0
20 0 20

PARSONS BRINCKERHOFF
650 ELM STREET
MANCHESTER, NH 03101

PROJECT NAME: LINCOLN
PROJECT NUMBER: BRF 0188 (8)

FILE NAME: z10j066sitebdr.dgn
PROJECT LEADER: G.K. DONINGTON
DESIGNED BY: C. CARNEY
EPSC FINAL CONDITIONS SITE PLAN (1)

PLOT DATE: 8-DEC-2014
DRAWN BY: C. CARNEY
CHECKED BY: R. BENJAMIN

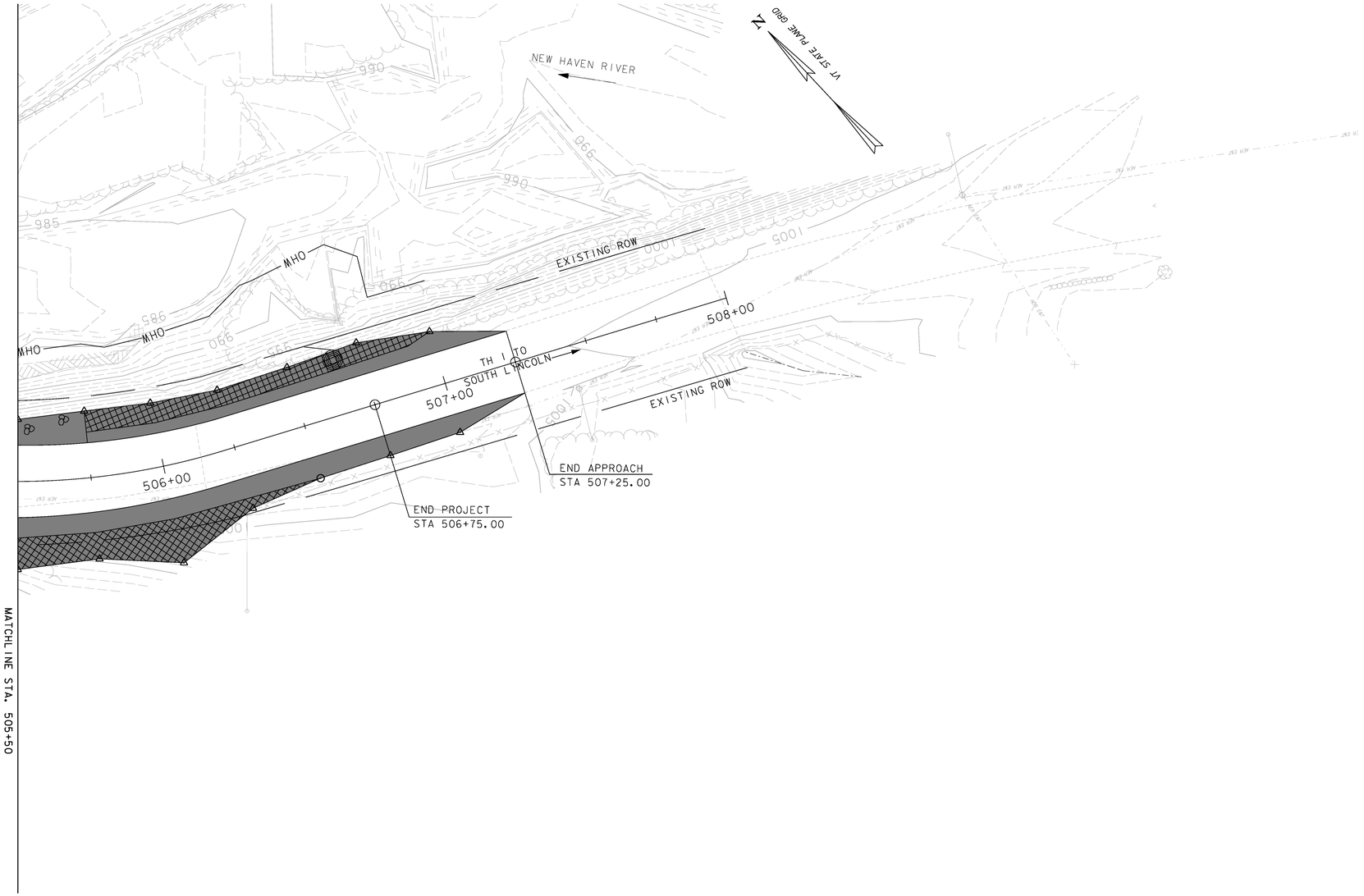


LEGEND

DISTURBED AREAS
REQUIRING RE-VEGETATION

EROSION MATTING

CONTOURS SHOWN ARE EXISTING.
SEE CROSS SECTIONS FOR PROPOSED GRADING.
SEE SHEET 6 FOR ADDITIONAL EPSC LEGEND SYMBOLOGY.

SCALE 1" = 20'-0
20 0 20

PARSONS BRINCKERHOFF
650 ELM STREET
MANCHESTER, NH 03101

PROJECT NAME: LINCOLN
PROJECT NUMBER: BRF 0188 (8)

FILE NAME: z10j066sitebdr.dgn
PROJECT LEADER: G.K. DONINGTON
DESIGNED BY: C. CARNEY
EPSC FINAL CONDITIONS SITE PLAN (2)

PLOT DATE: 8-DEC-2014
DRAWN BY: C. CARNEY
CHECKED BY: R. BENJAMIN
SHEET 54 OF 62

SYMBOL

NOT TO SCALE

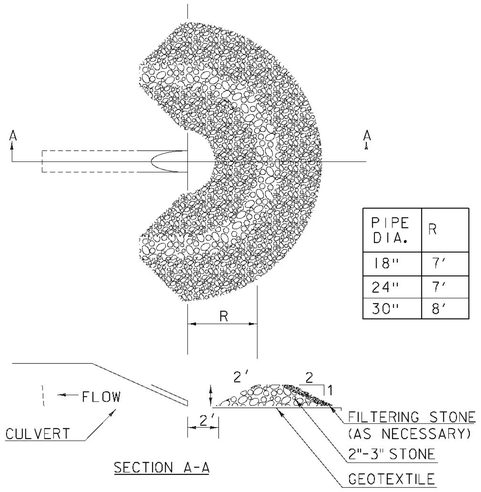


## CONSTRUCTION SPECIFICATIONS

1. USE 2" TO 3" STONE. FILTERING STONE SHALL BE 3/4".
2. PLACE STONE OVER GEOTEXTILE.
3. ONCE THE AREAS UPSTREAM FROM THE CHECK DAM ARE STABILIZED WITH VEGETATION, THE SEDIMENT TRAPPED BEHIND THE DAM SHALL BE DISPOSED OF IN AN APPROVED WASTE AREA.
4. THE CHECK DAM(S) SHALL BE FLATTENED AND GRADED IN A MANNER WHICH PROTECTS THE AREA FROM EROSION AND CHANNEL BLOCKAGE . (GEOTEXTILE MUST BE REMOVED).
5. THE GEOTEXTILE MUST BE DISPOSED OF APPROPRIATELY.
6. THE AREA CONTRIBUTING TO THE CHECK DAM SHALL NOT EXCEED 4 ACRES.

ADAPTED FROM DETAILS PROVIDED BY: ILLINOIS USDA-NRCS
ORIGINALLY DEVELOPED BY USDA-NRCS

# PIPE INLET PROTECTION

| REVISIONS | |
|---|---|
| MARCH 6, 2008 | WHF |
| JANUARY 13, 2009 | WHF |

THIS WORK SHALL BE PERFORMED IN ACCORDANCE WITH SECTION 653 FOR INLET PROTECTION DEVICE, TYPE I (PAY ITEM 653.40).

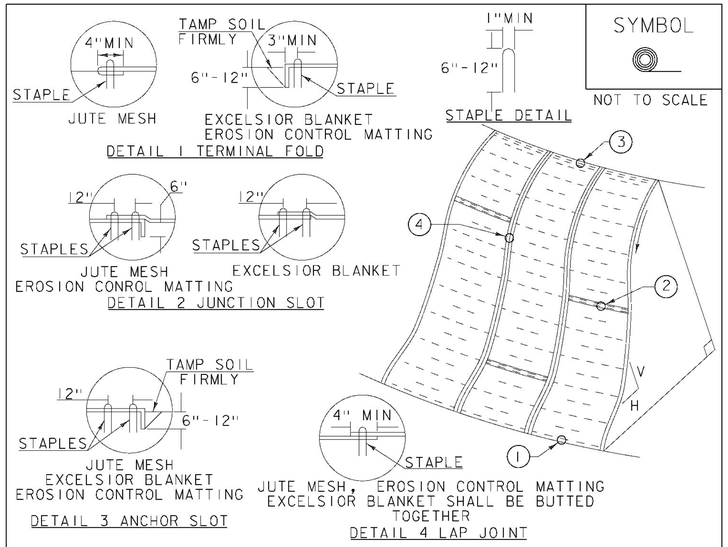


SYMBOL

NOT TO SCALE

## CONSTRUCTION SPECIFICATIONS

1. APPLY TO SLOPES GREATER THAN 3H: IV OR WHERE NECESSARY TO AID IN ESTABLISHING VEGETATION.
2. APPLY FERTILIZER, LIME SEED PRIOR TO PLACING MATTING.
3. STAPLES ARE TO BE PLACED ALTERNATELY, IN COLUMNS APPROXIMATELY 2' APART AND IN ROWS APPROXIMATELY 3' APART. APPROXIMATELY 175 STAPLES ARE REQUIRED PER 4'X225' ROLL OF MATERIAL AND 125 STAPLES ARE REQUIRED PER 4'X150' ROLL OF MATERIAL.
4. DISTURBED AREAS SHALL BE SMOOTHLY GRADED. EROSION CONTROL MATERIAL SHALL BE PLACED LOOSELY OVER GROUND SURFACE. DO NOT STRETCH.
5. ALL TERMINAL ENDS AND TRANSVERSE LAPS SHALL BE STAPLED AT APPROXIMATELY 12" INTERVALS.

ADAPTED FROM DETAILS PROVIDED BY: NEW YORK STATE DEC
ORIGINALLY DEVELOPED BY USDA-NRCS
VERMONT DEPARTMENT OF ENVIRONMENTAL CONSERVATION

# ROLLED EROSION CONTROL PRODUCT (RECP) SIDE SLOPE

NOTES:
REFER TO "THE VERMONT STANDARDS & SPECIFICATIONS FOR EROSION PREVENTION & SEDIMENT CONTROL -2006- "FROM THE VT AGENCY OF NATURAL RESOURCES FOR ADDITIONAL GUIDANCE.
THIS WORK SHALL BE PERFORMED IN ACCORDANCE WITH SECTION 653 AND AS SHOWN IN THE PLANS FOR TEMPORARY EROSION MATTING (PAY ITEM 653.20) OR PERMANENT EROSION MATTING (PAY ITEM 653.21).

| REVISIONS | |
|---|---|
| APRIL 16, 2007 | JMF |
| JANUARY 13, 2009 | WHF |

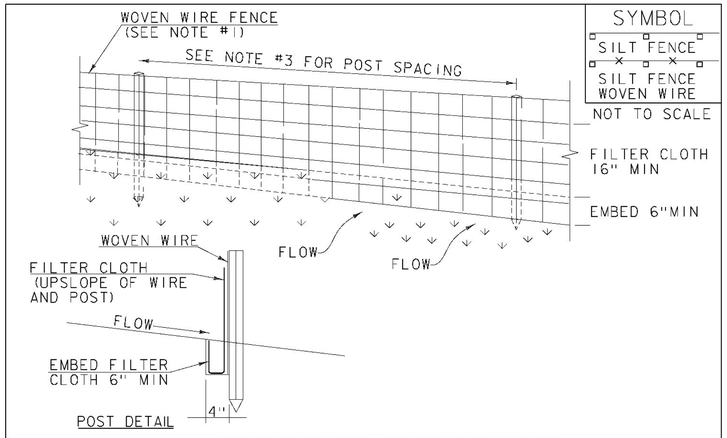


SYMBOL

SILT FENCE

SILT FENCE WOVEN WIRE

NOT TO SCALE

## CONSTRUCTION SPECIFICATIONS

1. WOVEN WIRE REINFORCED FENCE IS REQUIRED WITHIN 100' UPSLOPE OF RECEIVING WATERS WHEN THE PROJECT FALLS UNDER A CONSTRUCTION STORMWATER PERMIT. WOVEN WIRE SHALL BE A MIN. 14 GAUGE WITH A 6" MAX. MESH OPENING.
2. FILTER CLOTH SHALL BE EITHER FILTER X, MIRAFI100X, STABILINKA T140N OR APPROVED EQUIVALENT.
3. POST SPACING FOR WIRE-BACKED FENCE SHALL BE 10' MAXIMUM. FOR FILTER-CLOTH FENCE, WHEN ELONGATION IS >50%, POST SPACING SHALL NOT EXCEED 4' AND WHEN ELONGATION IS <50%, POST SPACING SHALL NOT EXCEED 6'.
4. WOVEN WIRE FENCE IS TO BE FASTENED SECURELY TO FENCE POSTS WITH WIRE TIES. FILTER CLOTH IS TO BE FASTENED SECURELY TO WOVEN WIRE FENCE WITH TIES SPACED EVERY 24" AT TOP AND MID SECTION.
5. WHEN TWO SECTIONS OF FILTER CLOTH ADJOIN EACH OTHER THEY SHALL BE OVER-LAPPED BY 6" AND FOLDED.
6. MAINTENANCE SHALL BE PERFORMED AS NEEDED AND MATERIAL REMOVED WHEN SEDIMENT REACHES HALF OF FABRIC HEIGHT.

ADAPTED FROM DETAILS PROVIDED BY: NEW YORK STATE DEC
ORIGINALLY DEVELOPED BY USDA-NRCS
VERMONT DEPARTMENT OF ENVIRONMENTAL CONSERVATION

# SILT FENCE

NOTES:
REFER TO "THE VERMONT STANDARDS & SPECIFICATIONS FOR EROSION PREVENTION & SEDIMENT CONTROL -2006- "FROM THE VT AGENCY OF NATURAL RESOURCES FOR ADDITIONAL GUIDANCE.

THIS WORK SHALL BE PERFORMED IN ACCORDANCE WITH SECTION 649 AND AS SHOWN IN THE PLANS FOR GEOTEXTILE FOR SILT FENCE (PAY ITEM 649.51) ~~OR GEOTEXTILE FOR SILT FENCE, WOVEN WIRE REINFORCED (PAY ITEM 649.515).~~

| REVISIONS | |
|---|---|
| MARCH 21, 2008 | WHF |
| DECEMBER 11, 2008 | WHF |
| JANUARY 13, 2009 | WHF |

PROJECT NAME: LINCOLN
PROJECT NUMBER: BRF 0188 (8)


PARSONS BRINCKERHOFF
650 ELM STREET
MANCHESTER, NH 03101


FILE NAME: x10J066epscdet.dgn
PROJECT LEADER: C.K. DONINGTON
DESIGNED BY: C CARNEY
EPSC DETAILS (1)

PLOT DATE: 8-DEC-2014
DRAWN BY: C CARNEY
CHECKED BY: R BENJAMIN
SHEET 55 OF 62

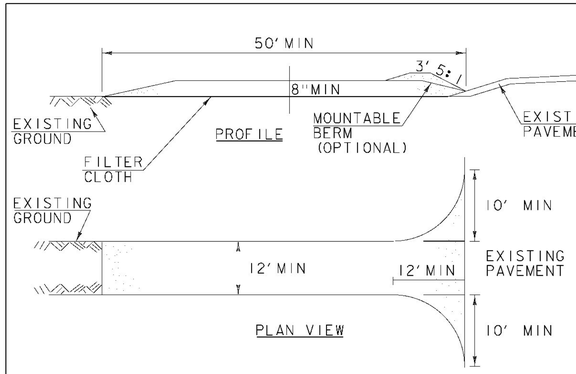


SYMBOL

NOT TO SCALE

## CONSTRUCTION SPECIFICATIONS

1. STONE SIZE- USE 1-4" STONE, RECLAIMED OR RECYCLED CONCRETE EQUIVALENT.
2. LENGTH- NOT LESS THAN 50' (EXCEPT ON A SINGLE RESIDENCE LOT WHERE A 30' MINIMUM LENGTH APPLIES).
3. THICKNESS- NOT LESS THAN 8".
4. WIDTH- 12' MINIMUM, BUT NOT LESS THAN THE FULL WIDTH AT POINTS WHERE INGRESS OR EGRESS OCCURS. 24' IF SINGLE ENTRANCE TO SITE.
5. GEOTEXTILE MUST BE PLACED OVER THE ENTIRE AREA PRIOR TO PLACING STONE.
6. SURFACE WATER- ALL SURFACE WATER FLOWING OR DIVERTED TOWARD CONSTRUCTION ENTRANCES SHALL BE PIPED BENEATH THE ENTRANCE. IF PIPING IS IMPRACTICAL, A MOUNTABLE BERM WITH 5:1 SLOPES WILL BE PERMITTED.
7. MAINTENANCE- THE ENTRANCE SHALL BE MAINTAINED IN A CONDITION WHICH WILL PREVENT TRACKING OR FLOWING OF SEDIMENT ONTO PUBLIC RIGHTS-OF-WAY, ALL SEDIMENT SPILLED, DROPPED, WASHED OR TRACKED ONTO PUBLIC RIGHTS-OF-WAY MUST BE REMOVED IMMEDIATELY.
8. WHEN WASHING IS REQUIRED, IT SHALL BE DONE ON AN AREA STABILIZED WITH STONE AND WHICH DRAINS INTO AN APPROVED SEDIMENT TRAPPING DEVICE.
9. PERIODIC INSPECTION AND NEEDED MAINTENANCE SHALL BE PROVIDED ACCORDING TO PERMIT REQUIREMENTS.

ADAPTED FROM DETAILS PROVIDED BY: NEW YORK STATE DEC
ORIGINALLY DEVELOPED BY USDA-NRCS
VERMONT DEPARTMENT OF ENVIRONMENTAL CONSERVATION

# STABILIZED CONSTRUCTION ENTRANCE

NOTES:
REFER TO "THE VERMONT STANDARDS & SPECIFICATIONS FOR EROSION PREVENTION & SEDIMENT CONTROL -2006- " FROM THE VT AGENCY OF NATURAL RESOURCES FOR ADDITIONAL GUIDANCE.

THIS WORK SHALL BE PERFORMED IN ACCORDANCE WITH SECTION 653 FOR VEHICLE TRACKING PAD (PAY ITEM 653.35) OR AS SPECIFIED IN THE CONTRACT.

| REVISIONS | |
|---|---|
| MARCH 24, 2008 | WHF |
| JANUARY 13, 2009 | WHF |
| | |
| | |
| | |

| VAOT RURAL AREA MIX | | | | | |
|---|---|---|---|---|---|
| | LBS/AC | | | | |
| % WEIGHT | BROADCAST | HYDROSEED | NAME | GERM % | PURITY % |
| 37.5% | 22.5 | 45 | CREEPING RED FESCUE | 85% | 98% |
| 37.5% | 22.5 | 45 | TALL FESCUE | 90% | 95% |
| 5.0% | 3 | 6 | RED TOP | 90% | 95% |
| 15.0% | 9 | 18 | BIRDSFOOT TREFOIL | 85% | 98% |
| 5.0% | 3 | 6 | ANNUAL RYE GRASS | 85% | 95% |
| 100% | 60 | 120 | | | |

| VAOT URBAN AREA MIX | | | | | |
|---|---|---|---|---|---|
| | LBS/AC | | | | |
| % WEIGHT | BROADCAST | HYDROSEED | NAME | GERM % | PURITY % |
| 42.5% | 34 | 68 | CREEPING RED FESCUE | 85% | 98% |
| 10.0% | 8 | 16 | PERENNIAL RYE GRASS | 90% | 95% |
| 42.5% | 34 | 68 | KENTUCKY BLUE GRASS | 85% | 85% |
| 5.0% | 4 | 8 | ANNUAL RYE GRASS | 85% | 95% |
| 100% | 80 | 160 | | | |

| SOIL AMENDMENT GUIDANCE | | | |
|---|---|---|---|
| FERTILIZER | | LIME | |
| BROADCAST | HYDROSEED | BROADCAST | HYDROSEED |
| 10-20-10 | *FOLLOW* | PELLETIZED | *FOLLOW* |
| 500 LBS/AC | *MANUFACTURER* | 2 TONS/AC | *MANUFACTURER* |

## CONSTRUCTION GUIDANCE

1. RURAL SEED MIX: USE AS INDICATED IN THE PLANS AND/OR FOR ALL ESTABLISHED UPLAND (NON WETLAND) AREAS DISTURBED BY THE CONTRACTOR.
2. URBAN SEED MIX: USE AS INDICATED IN THE PLANS AND/OR FOR ALL ESTABLISHED LAWN AREAS DISTURBED BY THE CONTRACTOR.
3. ALL SEED MIXTURES: SHALL NOT HAVE A WEED CONTENT EXCEEDING 0.40% BY WEIGHT AND SHALL BE FREE OF ALL NOXIOUS SEED.
4. FERTILIZER AND LIMESTONE: SHALL FOLLOW RATES SHOWN ON PLAN OR AS DIRECTED BY THE ENGINEER
5. HAY MULCH: TO BE PLACED ON EARTH SLOPES AT THE RATE OF 2 TONS/ACRE, ACHIEVE 90% GROUND COVER OR AS DIRECTED BY THE ENGINEER.
6. TOPSOIL: TO BE USED WITH SEED AS INDICATED ON THE PLANS, OR AS DIRECTED BY THE ENGINEER.
7. HYDROSEEDING: ALTHOUGH GUIDANCE IS GIVEN ABOVE THE SITE CONDITIONS AND THE TYPE OF HYDROSEED WILL ULTIMATELY DICTATE THE AMOUNTS AND TYPES OF SOIL AMENDMENTS TO BE APPLIED
8. TURF ESTABLISHMENT: PLACING SEED, FERTILIZER, LIME AND MULCH PRIOR TO SEPTEMBER 15 AND AFTER APRIL 15 CAN BETTER ENSURE A VIGOROUS GROWTH OF GRASS.

ADAPTED FROM VTRANS TECHNICAL LANDSCAPE MANUAL FOR ROADWAYS AND TRANSPORTATION FACILITIES

# TURF ESTABLISHMENT

| REVISIONS | |
|---|---|
| JUNE 23, 2009 | WHF |
| JANUARY 15, 2010 | WHF |
| FEBRUARY 16, 2011 | WHF |
| | |
| | |

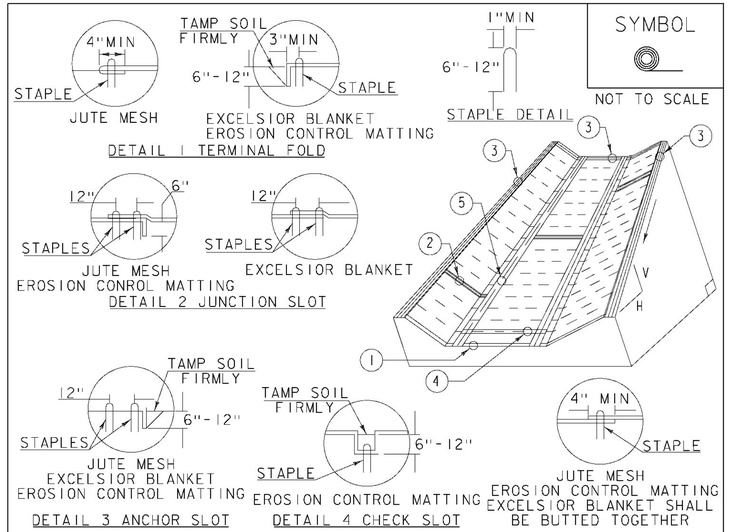


SYMBOL

NOT TO SCALE

## CONSTRUCTION SPECIFICATIONS

1. EROSION MATTING, CHECK SLOTS, SHALL BE SPACED IN DITCH CHANNEL SO THAT ONE OCCURS WITHIN EACH 50' ON SLOPES OF MORE THAN 4% AND LESS THAN 6%. ON SLOPES OF 6% OR MORE, THEY SHALL BE SPACED SO THAT ONE OCCURS WITHIN EACH 25'.
2. APPLY FERTILIZER, LIME SEED PRIOR TO PLACING MATTING.
3. STAPLES ARE TO BE PLACED ALTERNATELY, IN COLUMNS APPROXIMATELY 2' APART AND IN ROWS APPROXIMATELY 3' APART. APPROXIMATELY 175 STAPLES ARE REQUIRED PER 4'X225' ROLL OF MATERIAL AND 125 STAPLES ARE REQUIRED PER 4'X150' ROLL OF MATERIAL.
4. DISTURBED AREAS SHALL BE SMOOTHLY GRADED. EROSION CONTROL MATERIAL SHALL BE PLACED LOOSELY OVER GROUND SURFACE. DO NOT STRETCH.
5. ALL TERMINAL ENDS AND TRANSVERSE LAPS SHALL BE STAPLED AT APPROXIMATELY 12" INTERVALS.

ADAPTED FROM DETAILS PROVIDED BY: NEW YORK STATE DEC
ORIGINALLY DEVELOPED BY USDA-NRCS
VERMONT DEPARTMENT OF ENVIRONMENTAL CONSERVATION

# ROLLED EROSION CONTROL PRODUCT (RECP) DITCH

NOTES:
REFER TO "THE VERMONT STANDARDS & SPECIFICATIONS FOR EROSION PREVENTION & SEDIMENT CONTROL -2006- " FROM THE VT AGENCY OF NATURAL RESOURCES FOR ADDITIONAL GUIDANCE.

THIS WORK SHALL BE PERFORMED IN ACCORDANCE WITH SECTION 653 AND AS SHOWN IN THE PLANS FOR TEMPORARY EROSION MATTING (PAY ITEM 653.20) OR PERMANENT EROSION MATTING (PAY ITEM 653.21).

| REVISIONS | |
|---|---|
| MARCH 8, 2007 | JMF |
| APRIL 16, 2007 | WHF |
| JANUARY 13, 2009 | WHF |
| | |
| | |

PROJECT NAME: LINCOLN
PROJECT NUMBER: BRF 0188 (8)

FILE NAME: z10j066espcdet.dgn
PROJECT LEADER: G.K. DONINGTON
DESIGNED BY: C CARNEY
EPSC DETAILS (2)

PLOT DATE: 8-DEC-2014
DRAWN BY: C CARNEY
CHECKED BY: R BENJAMIN
SHEET 56 OF 62

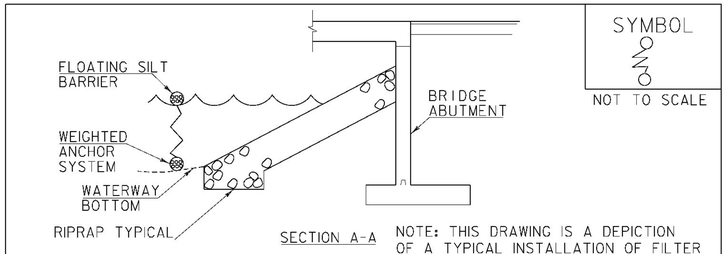


SYMBOL

NOT TO SCALE

SECTION A-A

NOTE: THIS DRAWING IS A DEPICTION OF A TYPICAL INSTALLATION OF FILTER CURTAIN. IT IN NO WAY DEFINES THE TYPE OR USE OF COFFERDAM IF USED.

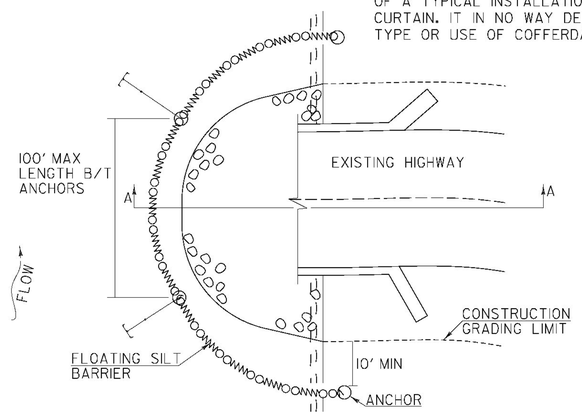


## CONSTRUCTION SPECIFICATIONS

1. FILTER CURTAIN SHALL NOT BE PLACED ACROSS A FLOWING WATERWAY, OR IN A WATERWAY WITH STREAM VELOCITIES GREATER THAN 1.5 FEET/SECOND.
2. MAXIMUM 100' LENGTH BETWEEN ANCHORS.
3. LAST SECTION SHALL TERMINATE A MINIMUM OF 10' BEYOND LIMIT OF DISTURBANCE.
4. THE WEIGHTED ANCHOR SYSTEM SHALL BE A TYPE WHICH ALLOWS THE CURTAIN TO CONFORM TO THE BOTTOM OF THE WATERWAY.
5. THE CURTAIN SHALL BE REMOVED BY SLOWLY PULLING TOWARD THE SHORE MINIMIZING THE ESCAPE OF SEDIMENTS INTO WATERWAY.

# FILTER CURTAIN

| REVISIONS | |
|---|---|
| APRIL 1, 2008 | WHF |
| JANUARY 13, 2009 | WHF |
| SEPTEMBER 4, 2009 | WHF |
| | |
| | |

THIS WORK SHALL BE PERFORMED IN ACCORDANCE WITH SECTION 649 FOR GEOTEXTILE FOR FILTER CURTAIN (PAY ITEM 649.61).

PROJECT NAME: LINCOLN

PROJECT NUMBER: BRF 0188 (8)

FILE NAME: z10j066epscdet.dgn
PROJECT LEADER: G.K. DONINGTON
DESIGNED BY: C CARNEY
EPSC DETAILS (3)

PLOT DATE: 8-DEC-2014
DRAWN BY: C CARNEY
CHECKED BY: R BENJAMIN
SHEET 57 OF 62

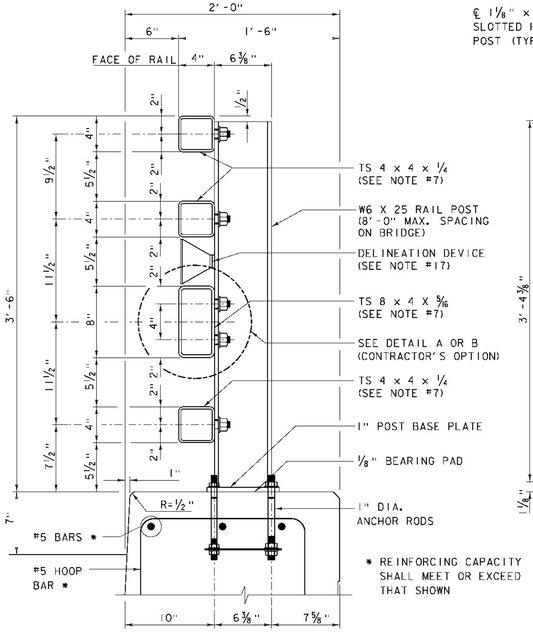


SECTION

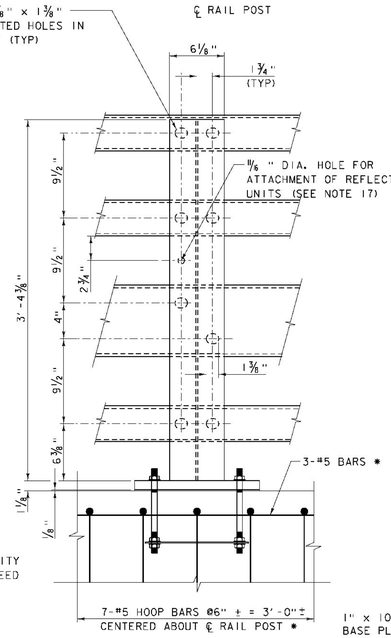


BACK ELEVATION

## RAIL POST DETAILS

SCALE: 1½" = 1'-0"

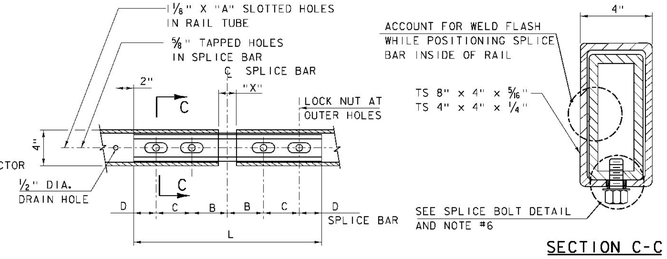


## RAIL SPLICE (BOTTOM VIEW)

SCALE: 1½" = 1'-0"




SECTION C-C

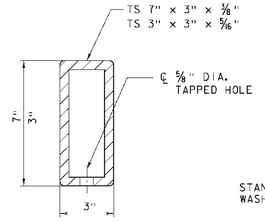


SPLICE BAR SECTION

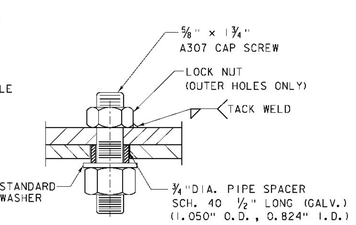


## SPLICE BOLT DETAIL

SCALE: 6" = 1'-0"

## RAIL SPLICE DETAILS

SCALE: 3" = 1'-0"

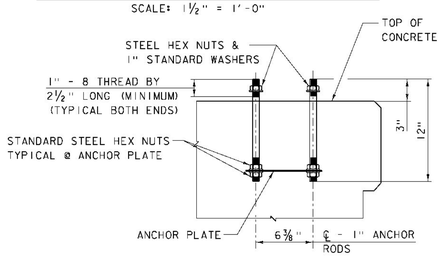


## POST ANCHOR ASSEMBLY

SCALE: 1½" = 1'-0"

### RAIL NOTES

(1) ITEM 525.34, BRIDGE RAILING, GALVANIZED 4 RAIL BOX BEAM SHALL INCLUDE POSTS, BASE PLATES, ANCHOR PLATES, ANCHOR RODS, PREFORMED PADS, RAIL ASSEMBLY BOLTS, NUTS, WASHERS, STUDS, STRUCTURAL TUBING, SPLICE BARS, PIPE SPACERS, ALL APPURTENANCES, AND GALVANIZING.

(2) BRIDGE RAIL POSTS SHALL BE SET NORMAL (90 DEGREES) TO THE PROFILE GRADE, EXCEPT ON GRADES OVER 5% WHERE POSTS SHALL BE SET VERTICAL.

(3) ENDS OF RAIL TUBE SECTIONS SHALL BE SAWED OR MILLED AND SHALL BE TRUE AND SMOOTH. ALL CUT EDGES OF ALL MATERIAL SHALL BE GROUND SMOOTH.

(4) EACH PIECE OF RAIL TUBING SHALL BE ATTACHED TO A MINIMUM OF THREE (3) POSTS.

(5) BOLT HOLES SHALL BE DRILLED OR PUNCHED. FLAME CUTTING MAY BE USED TO FINISH SLOTTED HOLES IF MECHANICALLY GUIDED.

(6) AT INTERIOR SPLICES, PIPE SPACERS SHALL BE USED ON ONLY ONE SIDE OF THE SPLICE TO ALLOW MOVEMENT ON THAT SIDE. ALL RAILS IN A SPLICE SHALL RECEIVE THE SAME TREATMENT. AT END SPLICES PIPE SPACERS SHALL BE USED ON BOTH SIDES OF THE SPLICE TO ALLOW MOVEMENT ON EACH SIDE.

(7) MILL OR SHOP TRANSVERSE WELDS SHALL NOT BE PERMITTED ON ANY RAIL ELEMENT. RAIL ELEMENTS USED ON CURVES SHALL USE ⅜" WALL TUBES AND SHALL BE SHOP FORMED TO THE REQUIRED CURVATURE.

(8) NO PUNCHING, DRILLING, CUTTING OR WELDING SHALL BE PERMITTED AFTER GALVANIZING, EXCEPT AS ALLOWED IN DETAILS A AND B. DAMAGED AREAS OF GALVANIZING SHALL BE THOROUGHLY CLEANED, PRETREATED, AND PAINTED WITH TWO COATS OF ORGANIC ZINC-RICH GALVANIZING REPAIR PAINT, HAVING MIN. 94% ZINC BY WEIGHT, TO A THICKNESS EQUAL TO THE ORIGINAL COATING ACCORDING TO THE STANDARD SPECIFICATIONS AND ASTM A780.

(9) NUTS FOR 1" DIA. THREADED ANCHOR RODS CONNECTING THE BASE PLATE TO THE CONCRETE SHALL BE TIGHTENED TO A SNUG FIT AND GIVEN AN ADDITIONAL ⅛ TURN.

(10) THREADS FOR ANCHOR RODS MAY BE ROLLED OR CUT. IF CUT THREADS ARE USED, BOLT DIAMETER SHALL NOT BE LESS THAN NOMINAL DIAMETER. IF ROLLED THREADS ARE USED, ROD DIAMETER SHALL NOT BE LESS THAN ROOT DIAMETER OF THREADS.

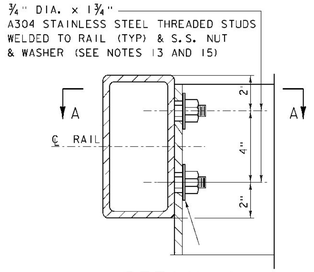


DETAIL A

SCALE: 3" = 1'-0"

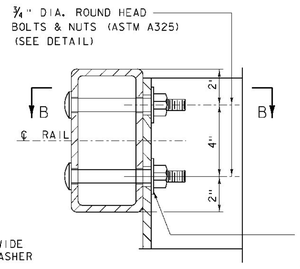


DETAIL B

SCALE: 3" = 1'-0"

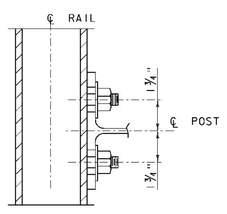


SECTION A-A

SCALE: 3" = 1'-0"

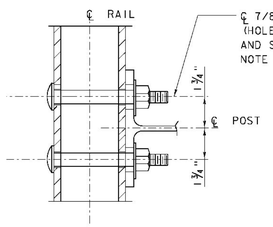


SECTION B-B

SCALE: 3" = 1'-0"

| SPLICE BAR DIMENSION TABLE | | | | | | |
|---|---|---|---|---|---|---|
| T | A | B | C | D | X | L |
| INTERIOR | 2 ½" | 4" | 4" | 2" | ¾" | 1'-8" |
| * ≤3¼" | 2 ½" | 4" | 4" | 2" | 2" | 1'-8" |
| * 3¼" <T< 5¼" | 3½" | 5" | 5" | 2 ½" | 3" | 2'-1" |

T = TOTAL MOVEMENT OF BRIDGE
* = END SPLICE BAR

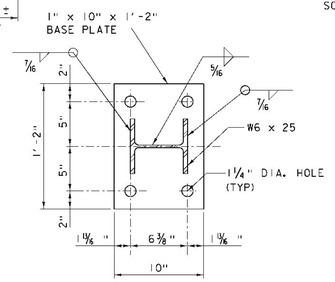


POST BASE PLATE

SCALE: 1½" = 1'-0"

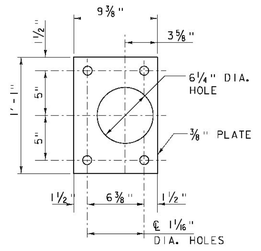


ANCHOR PLATE

SCALE: 1½" = 1'-0"

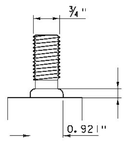


STUD WELD DETAIL

SCALE: 6" = 1'-0"

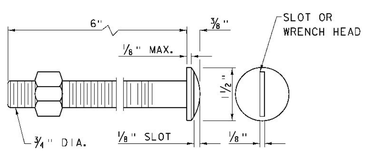


A325 ROUND HEAD BOLT DETAIL

SCALE: 6" = 1'-0"

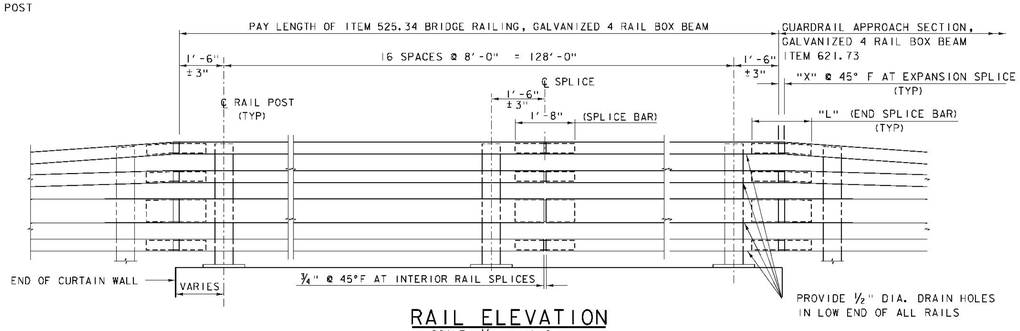


RAIL ELEVATION

SCALE: ½" = 1'-0"

### MATERIAL NOTES

IN ACCORDANCE WITH SECTION 525 AND THE FOLOWING:

(11) STRUCTURAL TUBING SHALL CONFORM TO THE REQUIREMENTS OF SUBSECTION 714.11 (ASTM A500, GRADE B, STRUCTURAL STEEL TUBING.) RAIL TUBING SHALL MEET THE LONGITUDINAL CHARPY V-NOTCH REQUIREMENTS OF 15 FT. LBS. AT 0° F. FOR ASTM A500, GRADE B, THE TEST SAMPLES SHALL BE TAKEN AFTER FORMING THE TUBES. CHARPY V-NOTCH IS NOT REQUIRED FOR SPLICE TUBES.

(12) RAIL POSTS AND BASE PLATES SHALL CONFORM TO THE REQUIREMENTS OF ASTM A572 GR 50, EXCEPT ANCHOR PLATES MAY BE ASTM A36. SEE SUBSECTION 732.03.

(13) THREADED STUDS AND MATCHING NUTS FOR RAIL-TO-POST ATTACHMENT (DETAIL A) SHALL CONFORM TO ASTM A276 TYPE 304, STAINLESS STEEL, AND SHALL BE TORQUE TESTED PER AWS D1.5, 7.7.1. DETAIL B BOLTS SHALL BE ASTM A325 OR A449. ALL OTHER BOLTS AND NUTS SHALL CONFORM TO ASTM A307 AND ASTM 563 GRADE A RESPECTIVELY OR BETTER, EXCEPT THAT ASTM A307 NUTS MAY BE USED ON THE BOTTOM OF ANCHOR ASSEMBLY. WASHERS SHALL BE HARDENED STEEL COMMERCIAL TYPE A PLAIN WIDE WASHERS AND SHALL MEET THE DIMENSIONAL REQUIREMENTS OF A.N.S.I. B18.22. ANCHOR RODS SHALL CONFORM TO ASTM A449 (SEE SUBSECTION 714.07).

(14) IN ACCORDANCE WITH SUBSECTION 726.08 ALL STEEL COMPONENTS (EXCEPT STAINLESS) SHALL BE GALVANIZED AFTER FABRICATION IN CONFORMANCE TO AASHTO M232 (ASTM A153) AND AASHTO M111 (ASTM A123). THE GALVANIZING KETTLE SHALL HAVE 0.05 TO 0.09 PERCENT NICKEL. GALVANIZED SURFACES SHALL HAVE A UNIFORM APPEARANCE AND GALVANIZED MATERIAL SHALL BE PROPERLY STORED.

(15) DETAIL A STUDS SHALL BE WELDED ON AFTER TUBES ARE GALVANIZED BY SPOT GRINDING OFF GALVANIZING, WELDING ON STUDS, THEN TOUCH UP GALVANIZING PER NOTE #8 ABOVE.

(16) PREFORMED BEARING PADS (1/8" THICK) SHALL CONFORM TO AASHTO M251.

(17) SEE STANDARD DRAWING G-1 FOR DETAILS OF DELINEATORS. A DELINEATOR SHALL BE INSTALLED AT 30 FOOT SPACING OR THE NEAREST POST. WHITE IS TO BE INSTALLED ON THE DRIVERS RIGHT. PAYMENT SHALL BE INCIDENTIAL TO OTHER ITEMS.

PROJECT NAME: LINCOLN

PROJECT NUMBER: BRF 0188 (8)

FILE NAME: z10J066T4rail.dgn
PROJECT LEADER:
DESIGNED BY:
4 RAIL BOX BEAM BRIDGE RAIL

PLOT DATE: 8-DEC-2014
DRAWN BY:
CHECKED BY:
SHEET 58 OF 62

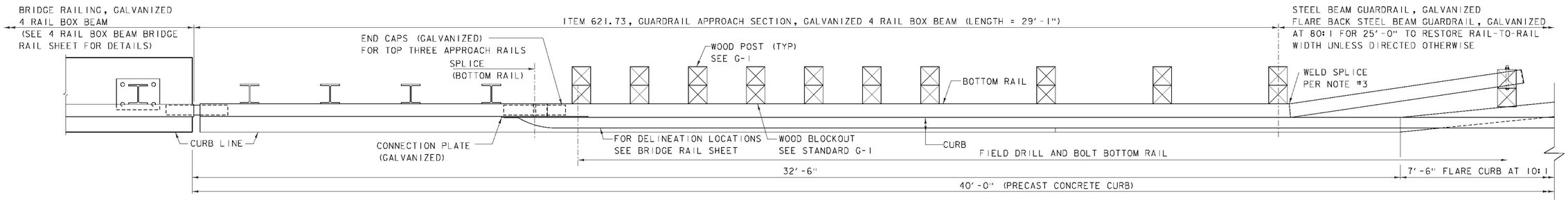


## PLAN - APPROACH RAIL

SCALE: 3/4" = 1'-0"

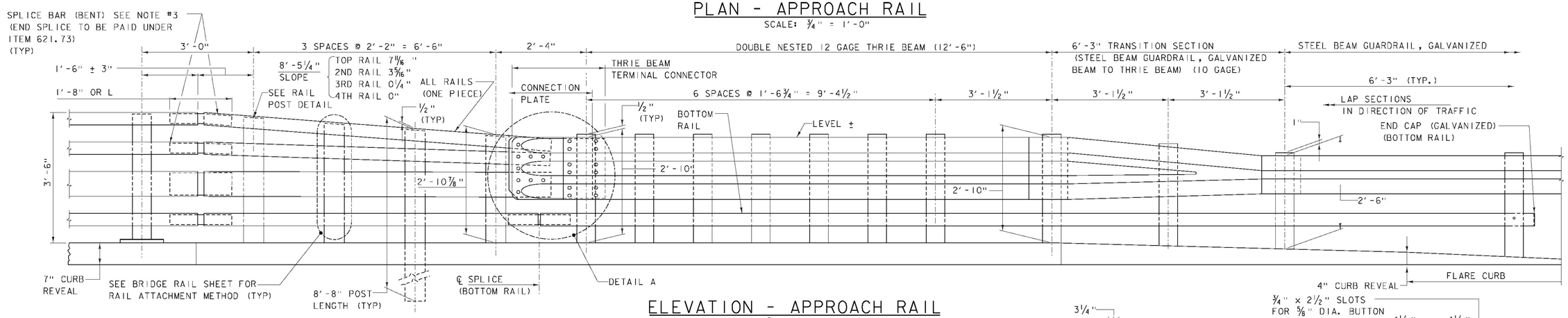


## ELEVATION - APPROACH RAIL

SCALE: 3/4" = 1'-0"

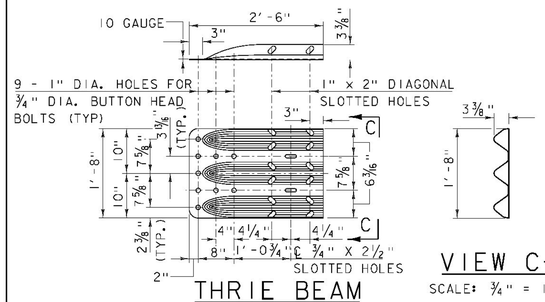


## THRIE BEAM TERMINAL CONNECTOR

SCALE: 3/4" = 1'-0"




## VIEW C-C

SCALE: 3/4" = 1'-0"

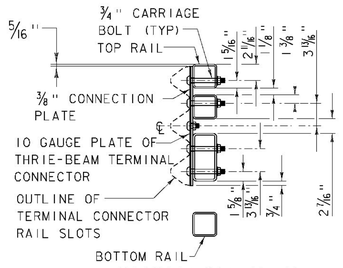


## SECTION B-B (CONNECTION PLATE)

SCALE: 1"=1'-0"

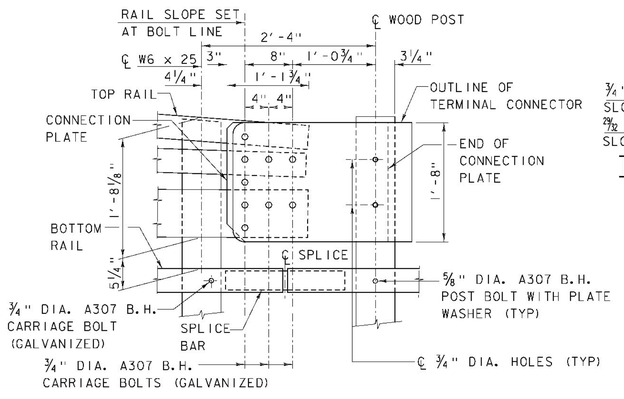


## B DETAIL A

SCALE: 1"=1'-0"

OVERLAPPING OF DOUBLE NESTED THRIE-BEAM NOT SHOWN FOR CLARITY

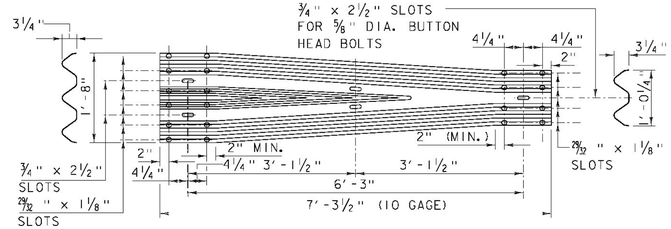


## THRIE BEAM TO STEEL BEAM GUARDRAIL, GALVANIZED TRANSITION SECTION

SCALE: 3/4" = 1'-0"

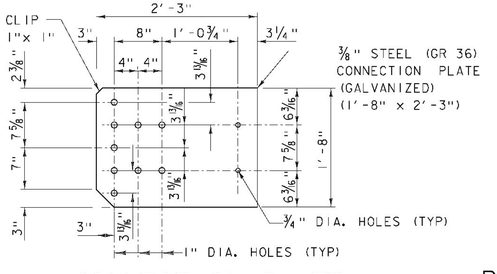


## CONNECTION PLATE

SCALE: 1"=1'-0"

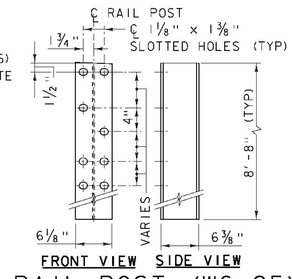


## RAIL POST (W6x25)

SCALE: 1"=1'-0"

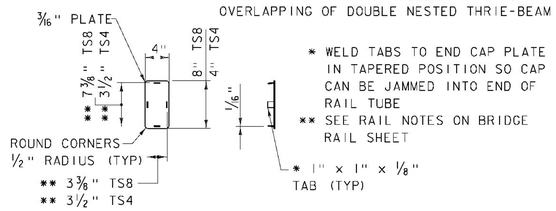


## END CAP DETAILS

SCALE: 1"=1'-0"

**NOTES:**

(1) ALL BRIDGE APPROACH RAIL MATERIALS, DIMENSIONS, SIZES, AND NOTES SHALL BE THE SAME AS THOSE OF THE BRIDGE RAIL, UNLESS OTHERWISE NOTED. SEE 4 RAIL BOX BEAM BRIDGE RAIL SHEET FOR NOTES AND ADDITIONAL INFORMATION.

(2) CARRIAGE BOLTS SHALL BE ASTM A307, AND NUTS SHALL BE ASTM A563 GRADE A OR BETTER (GALVANIZED). WASHERS SHALL BE ASTM F844.

(3) WELD SPLICE BAR TO FIT BEND. USE COMPLETE JOINT PENETRATION BUTT WELD (B-U2).

(4) PAYMENT FOR GUARDRAIL APPROACH SECTION, GALVANIZED 4 RAIL BOX BEAM SHALL INCLUDE THE TERMINAL CONNECTOR, THE CONNECTION PLATE, THE DEFLECTOR PLATE, RAIL, POSTS, BLOCKS, AND ATTACHMENT HARDWARE.

(5) ALL APPROACH RAIL SPLICES SHALL BE LAPPED IN THE DIRECTION OF TRAFFIC FLOW.

(6) THE INFORMATION SHOWN ON THIS SHEET SHALL BE USED FOR THE APPROACH RAIL AT ALL LOCATIONS, EXCEPT FOR THE APPROACH RAIL AT WW4. APPROACH RAIL AT WW4 SHALL FOLLOW THE DETAILS AND REQUIREMENTS SHOWN ON THIS SHEET, EXCEPT AS MODIFIED IN THE APPROACH RAIL ELEVATION AT WW4 SHOWN ON THE PLAN AND ELEVATION SHEET.

PROJECT NAME: LINCOLN

PROJECT NUMBER: BRF 0188 (8)

FILE NAME: z101066approrail.dgn
PROJECT LEADER:
DESIGNED BY:
4 RAIL BOX BEAM APPROACH RAIL

PLOT DATE: 8-DEC-2014
DRAWN BY:
CHECKED BY:
SHEET 59 OF 62

STATE OF VERMONT
AGENCY OF TRANSPORTATION

# RIGHT - OF - WAY DETAIL SHEET

## TABLE OF PROPERTY ACQUISITION

| PARCEL NO. | PROPERTY OWNER | ROW LAYOUT NO. | BEGINNING STATION | ENDING STATION | TAKE | REMAINDER | RIGHT | | | RECORDING DATA | | | | | REMARKS |
|---|---|---|---|---|---|---|---|---|---|---|---|---|---|---|---|
| | | | | | AREA± | AREA± | TYPE | T / P | AREA ± | TITLE | DATE | TOWN / CITY | BOOK | PAGE | |
| 1 | JACKSON, WILLARD T. | 1 | 500+78 LT | 503+54 LT | | | CONSTRUCTION | T | 1,453 SF | | | | | | INCL. PDF |
| | | | 501+05 LT | 503+37 LT | | | SLOPE | P | 3,336 SF | | | | | | INCL. EC |
| | | | 501+63 LT | 501+75 LT | | | INSTALL | T | | | | | | | PIPE INLET PROTECTION |
| | | | 502+63 LT | 503+28 LT | | | REMOVE | T | | | | | | | BARBED WIRE FENCE |
| | | | 502+71 LT | 503+34 LT | | | DRIVE | T | | | | | | | INCL. STONE FILL |
| | | | 502+88 LT | 503+46 LT | | | CULVERT & DRAINAGE | P | | | | | | | |
| | | | 503+27 LT | 503+52 LT | | | INSTALL & MAINTAIN | P | 165 SF | | | | | | INCL. BRIDGE FOOTING & WINGWALL |
| | | | 503+75 LT | 503+96 LT | | | CONSTRUCTION | T | 75 SF | | | | | | INCL. STONE FILL & EC |
| 2 | HUTCHINS, ROY M. | 1 | 501+36 RT | 501+64 RT | | | CONSTRUCTION | T | 240 SF | WDOE | 04/30/14 | LINCOLN | 75 | 368-369 | INCL. PDF & EC |
| | | | 501+64 RT | | | | DRAINAGE | P | | | | | | | |
| 3 | TRUCHON, EVAN M. & LISA R. | 1 | 501+63 RT | | | | DRAINAGE | P | | | | | | | |
| | | | 501+64 RT | 504+67 RT | | | UTILITY | P | 0.18 A | | | | | | 7,646 SF± |
| | | | 501+64 RT | 503+63 RT | | | CONSTRUCTION | T | 0.13 A | | | | | | INCL. PDF, EC & STONE FILL; 5,737 SF± |
| | | | 501+90 RT | 502+27 RT | | | SLOPE | T | 19 SF | | | | | | INCL. EC |
| | | | 502+83 RT | 503+17 RT | | | CHANNEL | P | 177 SF | | | | | | INCL. STONE FILL |
| | | | 503+97 RT | | | | | | | | | | | | W1 MONITOR WELL |
| | | | 504+11 RT | 504+32 RT | | | CONSTRUCTION | T | 86 SF | | | | | | INCL. PDF |
| | | | 504+18 RT | 504+36 RT | | | CHANNEL | P | 23 SF | | | | | | INCL. STONE FILL |
| | | | 504+22 RT | 504+55 RT | | | CULVERT & DRAINAGE | P | | | | | | | INCL. DRAIN INLET |
| | | | 504+27 RT | 504+37 RT | | | INSTALL & MAINTAIN | P | 24 SF | | | | | | BRIDGE FOOTING |
| | | | 504+33 RT | 504+50 RT | | | DRIVE | T | | | | | | | 14' WIDE; PAVED |
| | | | 504+43 RT | 504+66 RT | | | CONSTRUCTION | T | 115 SF | | | | | | INCL. PDF |
| | | | 504+47 RT | 504+65 RT | | | SLOPE | P | 72 SF | | | | | | |
| 4 | HARTMAN, ERIC F. & | 1, 2 | 504+65 RT | 507+75 RT | | | UTILITY | P | 2,960 SF | | | | | | |
| | REABER-SPINA, SARAH F. | | 504+65 RT | 506+21 RT | | | SLOPE | P | 1,290 SF | | | | | | INCL. EC |
| | | | 504+66 RT | 506+57 RT | | | CONSTRUCTION | T | 971 SF | | | | | | INCL. PDF |
| | | | 504+95 RT | 507+05 RT | | | REMOVE | T | | | | | | | BARBED WIRE FENCE |
| | | | 506+14 RT | 506+23 RT | | | INSTALL & MAINTAIN | P | | | | | | | GUY WIRE & ANCHOR |
| 5 | GREEN MOUNTAIN POWER CORPORATION | | 500+78 LT | 507+75 RT | | | | | | | | | | | UTILITY |
| 6 | COMCAST OF CONNECTICUT/GEORGIA/ | | 500+78 LT | 507+75 RT | | | | | | | | | | | UTILITY |
| | MASSACHUSETTS/NEW HAMPSHIRE/ | | | | | | | | | | | | | | |
| | NEW YORK/NORTH CAROLINA/ | | | | | | | | | | | | | | |
| | VERMONT, LLC | | | | | | | | | | | | | | |
| 7 | WAITSFIELD CHAMPLAIN VALLEY | | 500+78 LT | 507+75 RT | | | | | | | | | | | UTILITY |
| | TELECOM | | | | | | | | | | | | | | |

## TABLE OF REVISIONS

| REVISION NO. | ROW SET SHEET # | DESCRIPTION | DATE |
|---|---|---|---|
| 1 | 4, 5 | ADD PROPOSED UTILITIES TO LAYOUTS | 03/26/14 |
| | | DONE BY: MT CO 9870 APP BY: JB | |
| 2 | 3, 4 | PARCEL 3, TRUCHON - ADD HOUSE, | 04/17/14 |
| | | SEPTIC SYSTEM & WELL TO PLANS; | |
| | | ADD 'DO NOT DISTURB' NOTE FOR SEPTIC | |
| | | SYSTEM ON LAYOUT; ADD NOTE TO | |
| | | MONITOR WATER WELL ON LAYOUT AND | |
| | | DETAIL SHEET. | |
| | | DONE BY: MT CO 9872 APP BY: RC | |
| 3 | 3 | PARCEL 4, HARTMAN & REABER-SPINA | 04/17/14 |
| | | REVISED AREAS OF UE(P) AND SR(P) | |
| | | EASEMENTS. | |
| | | DONE BY: MT CO 9873 APP BY: RC | |
| 4 | 3, 4, 5 | PARCEL 4, HARTMAN - ADD HOUSE & | 05/30/14 |
| | | SEPTIC SYSTEM TO PLAN; ADD | |
| | | "REMOVE (T)" FOR BARBED WIRE | |
| | | FENCE 504+95 RT TO 507+05 RT. | |
| | | DONE BY: MT CO 9890 APP BY: RC | |
| 5 | 3, 4 | PARCEL 1, JACKSON - ADD DRIVE (T) | 06/11/14 |
| | | STA. 502+71 LT ~ 503+34 LT, INCL. STONE | |
| | | FILL. ADD CUL&DR (P) STA. 502+88 ~ | |
| | | 503+46 LT. | |
| | | DONE BY: MT CO 9898 APP BY: RC | |
| 6 | 4 | PARCEL 3, TRUCHON - ADD PROPOSED | 07/30/14 |
| | | FENCE TO BE INSTALLED BY PROPERTY | |
| | | OWNER. | |
| | | DONE BY: MT CO 9922 APP BY: RC | |

APPROVED: RYAN CLOUTIER DATE: 03-24-14
CHIEF, PLANS & TITLES

PROJECT NAME: **LINCOLN**
PROJECT NUMBER: **BRF 0188(8)**

FILE NAME: **r10j066detail.xls**
PROJECT LEADER: **T. SUMNER**
DESIGNED BY: **R. WHITE**
**R.O.W. DETAIL SHEET #1**

PLOT DATE: 30-JUL-2014
DRAWN BY: **M. TROTTIER**
CHECKED BY: **J. BLANCHARD**
SHEET 60 OF 62

**BEGIN R.O.W. PROJECT**
**BRF 0188(8)**
**STA. 500+78 23.12' LT**

**JACKSON, WILLARD T.** (1)

**HUTCHINS, ROY M.** (2)

**TRUCHON, EVAN M. & LISA R.** (3)

**HARTMAN, ERIC I**
**REABER-SPINA, SAR** (4)

**TOWN OF LINCOLN**

**N/F COBB**

**N/F BARNES**

CURVE #1
Delta = 32°32'48.36"
D = 23°52'23.67"
R = 240.00'
T = 70.06'
L = 136.33'
E = 10.02'

POB Sta 499+86.06
STA. 499+86.06
24.75'LT.
N57°14'27"W
181.97'
N58°15'38.57"W
500+00
501+00
502+00
503+00
504+00
505+00
N57°14'32"W
181.95'
STA. 499+86.06
24.75'RT.
BEGIN PROJECT
STA 500+75.00
BEGIN APPROACH
STA 500+25.00
MATCH EXISTING
PAVEMENT MARKINGS
RETAIN POLE
ADD NEW ANCHOR
PI Sta 502+38.06 BK
Sta 502+34.27 AHD
PT Sta 503+04.33
PROPOSED ALIGNMENT
TH 1 (EAST RIVER RD)
REMOVE EXISTING
TH 1 TO WEST LINCOLN
4" DOUBLE SOLID LINES (YELLOW)
REMOVE(T)
DRIVE(T)
CUL&DR(P)
I&M(P)
CONST(T)
SR(P)
INSTALL(T)
R=264.75'
L=148.13'
R=215.25'
L=120.00'
CH(P)
DR(P)
STA. 501+68.00
27.95'RT. PC
STA. 503+04.35
20.19'RT.
STA. 503+04.33
29.31'RT. PT
STA 503+75.00 MAINLINE
STA 101+50.00 RIVER LINE
POE Sta 103+00.00
PC Sta 503+61.54
PT Sta 503+81.54
UE(P)
FENCE TO BE INSTALLED
BY PROPERTY OWNER
NEW HAVEN RIVER
APPROX. LOCATION OF PROPERTY ACCESS TO REMAIN
ARCHEOLOGICAL AREA
STONE ABUTMENT
DO NOT IMPACT
BEGIN BRIDGE
STA 503+18.34
TEMPORARY OHW IMPACT= 688 SF
PROPOSED STONE APRON
STONE FILL TYPE IV
TEMPORARY STONE FILL (CLEAN) TYPE I= 3261 SF
101+00
102+00
103+00
156.70'
N26°4'57"W
156.70'
45°-0'-0.00"
END BRIDGE
STA 504+46.15
OHW IMPACT 459 SF
TEMPORARY OHW IMPACT= 186
STA. 504+61.05
21.17'RT.
CULV. & DR(P)
N26°4'20"W
156.72'
I&M(P)
DRIVE(T)
SR(P)
CONST(T)
REMOVE(T)
UE(P)
REMOVE EXISTING POLE
NEW POLE
APPROXIMATELY 10'
BEHIND EXISTING POLE
NEW POLE
STA 504+67 31' RT
(NEED NEW ANCHOR ON POLE)
STA. 504+61.05
28.33'RT. PC
Sta 504+61.05 PC
EXISTING DRIVE
SEPTIC SYSTEM (LEACH FIELD) APPROX. LOCATION DO NOT DISTURB
HOUSE APPROX. LOCATION
MONITOR WATER WELL APPROX. LOCATION
MATCHLINE 2
PI Sta 505+44.01 BK
Sta 505+37.84 AHD
MHO
AER E&T
P L

DRAINAGE NOTES

(1) STA 501+69.00 LT 17.87 - STA 501+64.15 RT 20.12
REMOVE EXISTING DI AND 12" RCP
CONSTRUCT DI W/TYPE E GRATE
SEE CROSS SECTION FOR INVERTS
CONSTRUCT 38.92 LF 18" RCP

(2) STA 501+64.15 RT 20.12
REMOVE EXISTING HEADWALL
CONSTRUCT REINFORCED CONCRETE HEADWALL
SEE CROSS SECTION FOR INVERTS
3'X 7' STONE PAD TYPE II AT OUTLET

(3) STA 504+53.46 RT 27.39 - STA 504+22.97 RT 30.53
REMOVE EXISTING DI AND 12" CMP
CONSTRUCT DI W/TYPE E GRATE
CONSTRUCT 30.2 LF 18" CPEP
INV IN = 995.50
INV OUT = 995.44

(4) STA 502+71.4 LT 19.8 - STA 503+46.44 LT 26.0
CONSTRUCT 81 LF X 12" CSP
INV IN = 996.65
INV OUT = 993.50

COLD PLANING, BITUMINOUS PAVEMENT
STA. 500+25 - 500+75

4 INCH YELLOW LINE (DOUBLE)
STA. 500+25 - 507+25

4 INCH WHITE LINE
STA. 500+25 - 507+25 RT
STA. 500+25 - 507+25 LT

REMOVAL AND DISPOSAL OF GUARDRAIL
STA. 501+91 - 503+00 RT
STA. 503+10 - 503+25 LT

MANUFACTURED TERMINAL SECTION, TANGENT
STA. 500+72 - 501+22 RT

STEEL BEAM GUARDRAIL, GALVANIZED
STA. 501+22 - 502+70 RT

GUARDRAIL APPROACH SECTION, GALVANIZED 4 RAIL BOX BEAM
STA. 502+72 - 503+03 RT
STA. 503+02 - 503+33 LT

BRIDGE RAILING, GALVANIZED 4 RAIL BOX BEAM
STA. 503+03 - 504+31 RT
STA. 503+33 - 504+61 LT

GUARDRAIL APPROACH SECTION, GALVANIZED 4 RAIL BOX BEAM
STA. 504+31 - 504+36 RT
STA. 504+61 - 504+91 LT

CONSTRUCT PAVED APRON
STA. 504+34 - 504+65 RT

EXISTING DRIVEWAY CULVERT
STA. 504+22 - 504+53 RT

**FOR R.O.W. USE ONLY**

LINES SHOWN ON THIS PLAN AS EXISTING PROPERTY LINES P/L ARE BELIEVED TO BE ACCURATE BUT SHOULD NOT BE RELIED UPON FOR PURPOSES UNRELATED TO THE TOWN OF LINCOLN'S ACQUISITION OF LAND AND RIGHTS FOR THIS PROJECT.

SCALE 1" = 20'-0
20 0 20

PROJECT NAME: LINCOLN
PROJECT NUMBER: BRF 0188(8)
FILE NAME: r10j066layl.dgn
PROJECT LEADER: T. SUMNER
DESIGNED BY: PARSONS BRINCKERHOFF
R.O.W. LAYOUT SHEET 1 OF 2
PLOT DA
DRAWN B
CHECKED
SHEET

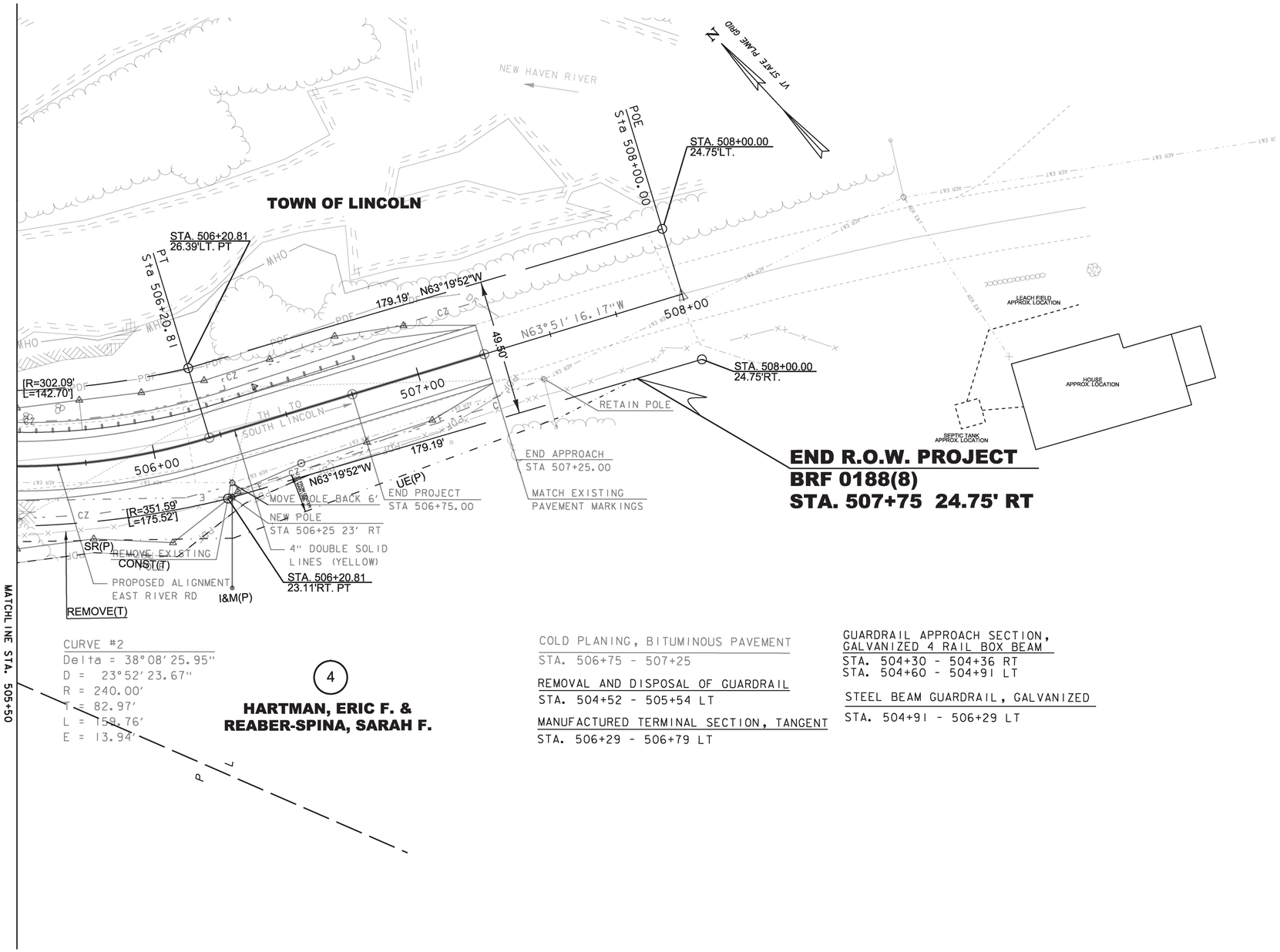


**END R.O.W. PROJECT**
**BRF 0188(8)**
**STA. 507+75 24.75' RT**

CURVE #2
Delta = 38°08'25.95"
D = 23°52'23.67"
R = 240.00'
T = 82.97'
L = 159.76'
E = 13.94'

4

**HARTMAN, ERIC F. &**
**REABER-SPINA, SARAH F.**

COLD PLANING, BITUMINOUS PAVEMENT
STA. 506+75 - 507+25

REMOVAL AND DISPOSAL OF GUARDRAIL
STA. 504+52 - 505+54 LT

MANUFACTURED TERMINAL SECTION, TANGENT
STA. 506+29 - 506+79 LT

GUARDRAIL APPROACH SECTION, GALVANIZED 4 RAIL BOX BEAM
STA. 504+30 - 504+36 RT
STA. 504+60 - 504+91 LT

STEEL BEAM GUARDRAIL, GALVANIZED
STA. 504+91 - 506+29 LT

LINES SHOWN ON THIS PLAN AS EXISTING PROPERTY LINES P/L ARE BELIEVED TO BE ACCURATE BUT SHOULD NOT BE RELIED UPON FOR PURPOSES UNRELATED TO THE TOWN OF LINCOLN'S ACQUISITION OF LAND AND RIGHTS FOR THIS PROJECT.

**FOR R.O.W. USE ONLY**

SCALE 1" = 20'-0
20 0 20

PROJECT NAME: LINCOLN
PROJECT NUMBER: BRF 0188(8)

FILE NAME: r10j0661ay2.dgn
PROJECT LEADER: T. SUMNER
DESIGNED BY: PARSONS BRINCKERHOFF
R.O.W. LAYOUT SHEET 2 OF 2

PLOT DATE: 30-MAY-2014
DRAWN BY: J. BLANCHARD
CHECKED BY: R. CLOUTIER
SHEET 62 OF 62

## CONCRETE GENERAL NOTES

1. ALL EXPOSED EDGES OF CONCRETE SHALL BE CHAMFERED 1" x 1"
2. REINFORCING STEEL SIZE AND SPACING SHOWN IN THE PLANS IS BASED ON 60 KSI STEEL, UNLESS NOTED OTHERWISE. WITH THE ENGINEER'S PERMISSION, BAR SIZE AND SPACING MAY BE MODIFIED ACCORDING TO THE LATEST AASHTO LRFD BRIDGE DESIGN SPECIFICATION AND STRUCTURES DESIGN MANUAL WHEN USING HIGHER STRENGTH STEEL.

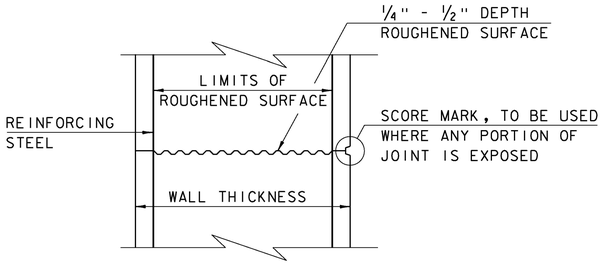


### TYPICAL HORIZONTAL CONSTRUCTION JOINT
(NOT TO SCALE)

1. THE SURFACE OF THE CONCRETE CONSTRUCTION JOINTS SHALL BE CLEANED AND FREE OF LAITANCE.
2. IMMEDIATELY BEFORE NEW CONCRETE IS PLACED, ALL CONSTRUCTION JOINTS SHALL BE WETTED AND STANDING WATER REMOVED.

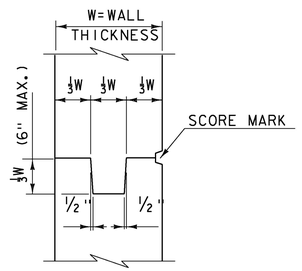


### TYPICAL CONCRETE CONSTRUCTION JOINT
(NOT TO SCALE)

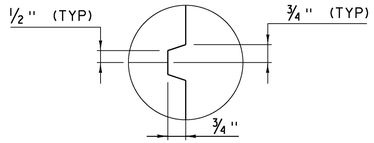


### SCORE MARK DETAIL
(NOT TO SCALE)

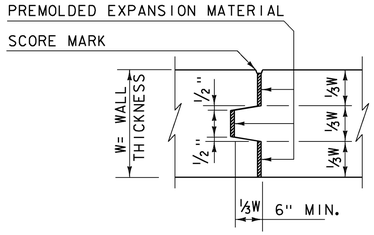


### TYPICAL CONCRETE EXPANSION JOINT
(NOT TO SCALE)

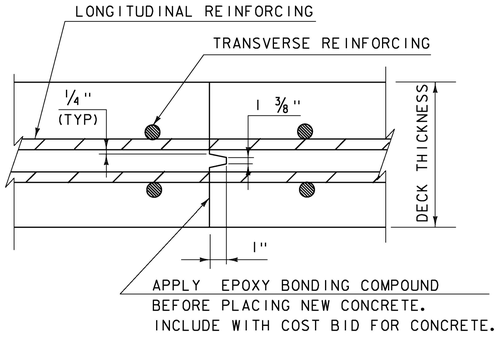


### TRANSVERSE BRIDGE SLAB CONSTRUCTION JOINT DETAILS
(NOT TO SCALE)

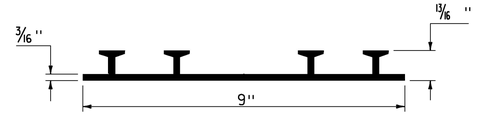


### P.V.C. WATERSTOP FOR CONSTRUCTION JOINTS
(NOT TO SCALE)

PAYMENT FOR THE P.V.C. WATERSTOP SHALL BE INCIDENTAL TO THE UNIT BID PRICE FOR THE ADJACENT CONCRETE.

OTHER CONFIGURATIONS OF WATERSTOP MAY BE USED UPON APPROVAL OF THE ENGINEER.

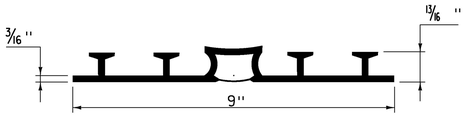


### P.V.C. WATERSTOP FOR EXPANSION JOINTS
(NOT TO SCALE)

PAYMENT FOR THE P.V.C. WATERSTOP SHALL BE INCIDENTAL TO THE UNIT BID PRICE FOR THE ADJACENT CONCRETE.

OTHER CONFIGURATIONS OF WATERSTOP MAY BE USED UPON APPROVAL OF THE ENGINEER.

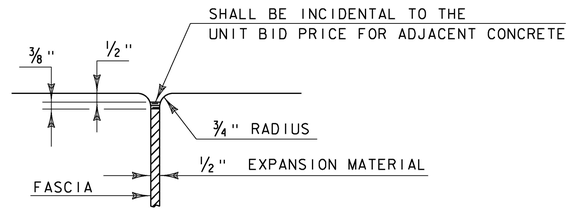


### JOINT BETWEEN FASCIA AND WINGWALL
(NOT TO SCALE)

| REVISIONS | |
|---|---|
| MAY 7, 2010 | APPROVED FOR USE BY VAOT STRUCTURES SECTION |
| FEBRUARY 9, 2012 | REBAR SUBSTITUTION ALLOWANCE ADDED TO CONCRETE GENERAL NOTES. |
| | |
| | |
| | |
| | |
| | |
| | |

# CONCRETE DETAILS AND NOTES

VERMONT AGENCY OF TRANSPORTATION
STRUCTURES - SECTION

STRUCTURES DETAIL
SD-501.00

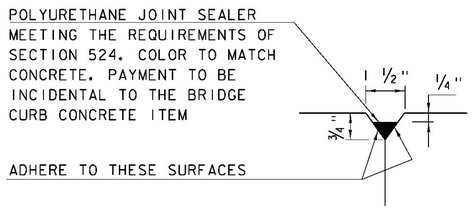


DETAIL "B"
(NOT TO SCALE)

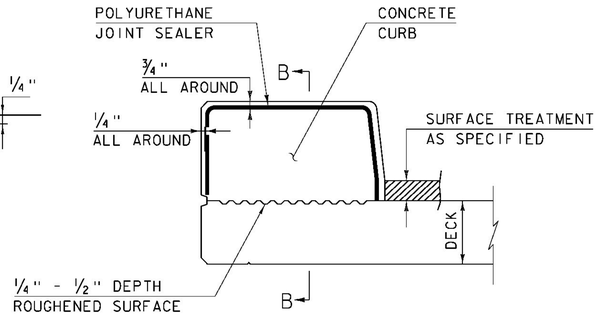


CONCRETE CURB JOINT SECTION
(NOT TO SCALE)

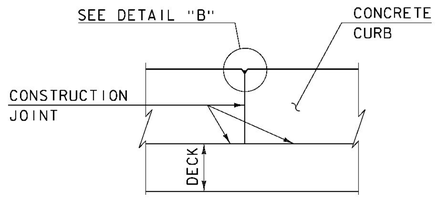


SECTION B - B
(NOT TO SCALE)

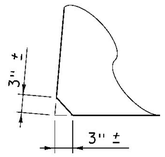


ACUTE ANGLE CLIP DETAIL
(NOT TO SCALE)

1. SEE TYPICAL HORIZONTAL CONSTRUCTION JOINT DETAIL FOR ADDITIONAL INFORMATION

## CONCRETE CURB JOINT NOTES

1. CONCRETE CURBS MAY BE PLACED IN ONE CONTINUOUS OPERATION IF AN APPROVED SHRINKAGE REDUCING ADMIXTURE LISTED IN THE SPECIAL PROVISIONS IS USED WITH THE CONCRETE MIX DESIGN. PAYMENT FOR THE SHRINKAGE REDUCING ADMIXTURE WILL BE INCIDENTAL TO THE BRIDGE CURB CONCRETE ITEM.

2. IF THE CONTRACTOR CHOOSES NOT TO USE AN APPROVED SHRINKAGE REDUCING ADMIXTURE, THE CURBS SHALL BE CONSTRUCTED WITH CONSTRUCTION JOINTS SPACED AT A MAXIMUM OF 15'-0" CENTER TO CENTER AND 2'-0" MINIMUM FROM THE CENTER OF NEAREST BRIDGE RAILING POST.

3. ON MULTI-SPAN CONTINUOUS SUPERSTRUCTURES, REGARDLESS OF WHETHER APPROVED SHRINKAGE REDUCING ADMIXTURE IS USED, CURB JOINTS SHALL BE LOCATED OVER THE CENTERLINE OF PIERS AND 7'-0" EACH SIDE OF THE CENTERLINE OF EACH PIER.

4. WHEN CURB JOINTS ARE USED THE CURBS SHALL BE PLACED IN ALTERNATE SECTIONS WITH A MINIMUM OF 48 HOUR DELAY BETWEEN ADJACENT PLACEMENTS.

5. LONGITUDINAL REINFORCING SHALL BE CONTINUOUS THROUGH CURB CONSTRUCTION JOINTS. CURB STIRRUP BARS SHALL BE TURNED AS NECESSARY TO MAINTAIN COVER IN THE FLARED CURB ENDS.

6. THE JOINT SPACING AND DETAILS SHOWN SHALL APPLY TO SIDEWALKS WHEN SHOWN IN THE PLANS.

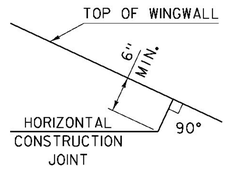


HORIZONTAL WINGWALL CONSTRUCTION JOINT
(NOT TO SCALE)

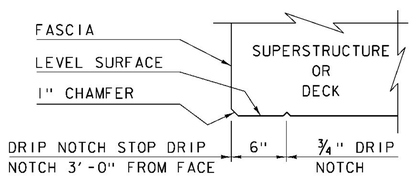


DRIP NOTCH DETAIL
(NOT TO SCALE)

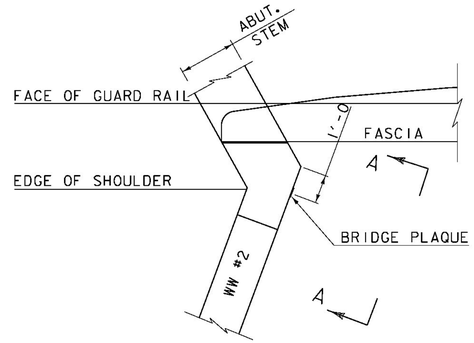


PLAN

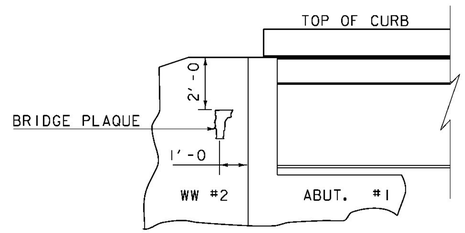


VIEW "A - A"

BRIDGE PLAQUE
(NOT TO SCALE)

THE BRIDGE PLAQUE WILL BE SUPPLIED BY THE AGENCY OF TRANSPORTATION AND SHALL BE INSTALLED BY THE CONTRACTOR AT ABUTMENT #1 ON THE RIGHT SIDE AS SHOWN OR AS DIRECTED BY THE ENGINEER.

PAYMENT FOR INSTALLATION OF THE BRIDGE PLAQUE SHALL BE INCIDENTAL TO THE ADJACENT CONCRETE.

| REVISIONS | |
|---|---|
| MAY 7, 2010 | APPROVED FOR USE BY VAOT STRUCTURES SECTION |
| JUNE 4, 2010 | MODIFIED AND ADDED TWO DETAILS |
| OCTOBER 10, 2012 | MODIFIED HORZ. JOINT WINGWALL ADD 6" MIN. DIMENSION |
| | |
| | |
| | |
| | |
| | |

# CONCRETE DETAILS AND NOTES

VERMONT AGENCY OF TRANSPORTATION
STRUCTURES - SECTION

STRUCTURES DETAIL
SD-502.00

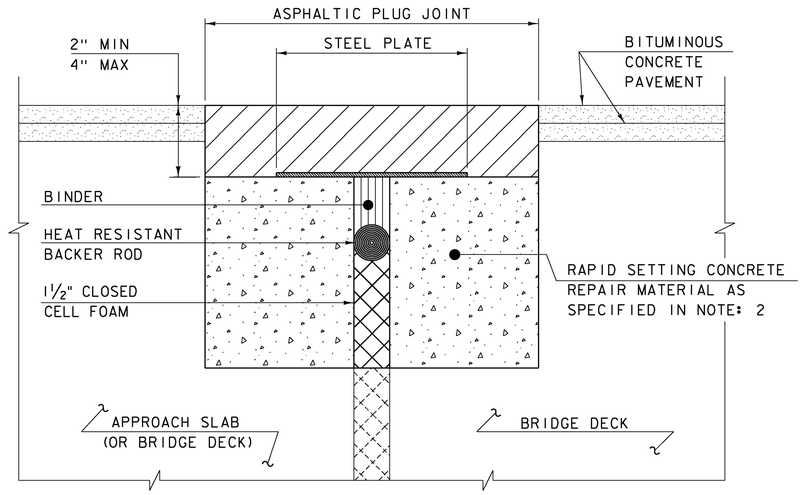


## ASPHALTIC PLUG JOINT DETAIL - REHAB

NOTES:

1. THE CONTRACTOR SHALL REMOVE ALL ASPHALTIC PLUG JOINT MATERIAL AND DETERIORATED CONCRETE AS DIRECTED BY THE ENGINEER. REMOVAL OF THE FIRST 4 INCHES OF MATERIAL SHALL BE INCLUDED IN THE BID PRICE FOR ITEM 516.10 BRIDGE EXPANSION JOINT, ASPHALTIC PLUG. ANY REMOVAL OF MATERIAL GREATER THAN 4 INCHES SHALL BE INCLUDED IN THE BID PRICE OF ITEM 580.20 RAPID SETTING CONCRETE REPAIR MATERIAL WITH COARSE AGGREGATE.

2. THE CONTRACTOR SHALL REPLACE REMOVED MATERIAL THAT IS LESS THAN 4" FROM FINISHED GRADE WITH ASPHALTIC PLUG JOINT MATERIAL MEETING THE REQUIREMENTS OF SUBSECTION 707.15. ALL REMOVED MATERIAL THAT IS GREATER THAN 4 INCHES FROM FINISHED GRADE SHALL BE REPLACED WITH RAPID SETTING CONCRETE REPAIR MATERIAL WITH COARSE AGGREGATE MEETING THE REQUIREMENTS OF SUBSECTION 780.04.

3. REINFORCING STEEL NOT SHOWN FOR CLARITY.

4. PLACE 1/4" THICK BY 8" WIDE SECTIONS OF STEEL PLATE OVER THE CENTER OF THE MOVEMENT GAP. SECURE THE PLATES FROM MOVING BY INSERTING LOCATING PINS THROUGH THE PRE-STAMPED HOLES INTO BACKER ROD AND COVER WITH HOT BINDER. THE STEEL PLATES MAY BE OMITTED WHERE THE ENGINEER DETERMINES THAT THE APPROACH SLAB OR BRIDGE DECK WILL PROVIDE INADEQUATE SUPPORT AND WHERE VERTICAL MOVEMENT OF THE PLATES MIGHT OCCUR.

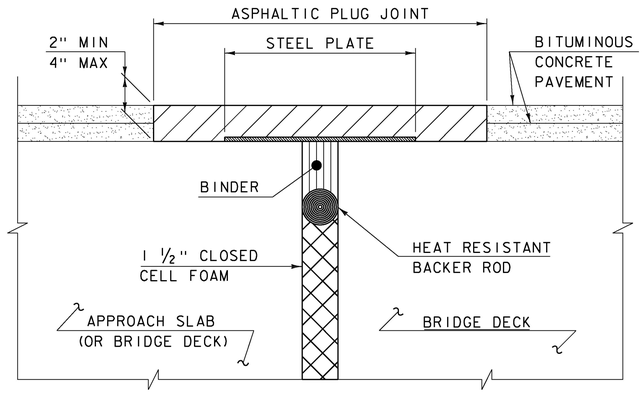


## ASPHALTIC PLUG JOINT DETAIL "A" - NEW

NOTE:
PLACE 1/4" THICK BY 8" WIDE SECTIONS OF STEEL PLATE OVER THE CENTER OF THE MOVEMENT GAP. SECURE THE PLATES FROM MOVING BY INSERTING LOCATING PINS THROUGH THE PRE-STAMPED HOLES INTO BACKER ROD AND COVER WITH HOT BINDER.

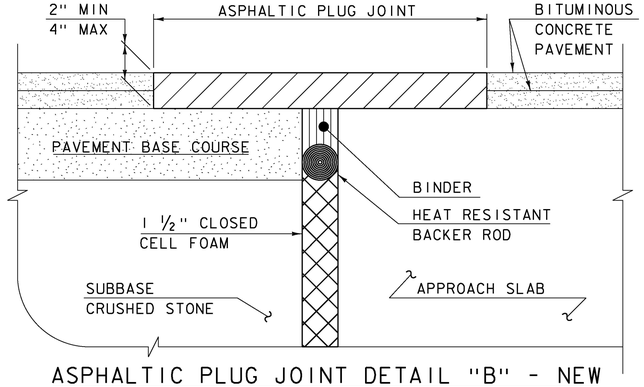


## ASPHALTIC PLUG JOINT DETAIL "B" - NEW

## ASPHALTIC PLUG JOINT NOTES

INSTALLATION:

1. LOCATE THE JOINT CENTRALLY OVER THE DECK OVERLAY EXPANSION GAP OR FIXED JOINT, MARKED OUT TO THE MANUFACTURER'S RECOMMENDED WIDTH.
2. REMOVE THE BITUMINOUS CONCRETE PAVEMENT FULL DEPTH AS SHOWN ON THE PLANS. THE PAVEMENT SHALL BE DRY AND SAW CUT TO THE LIMITS REQUIRED TO PLACE THE JOINT. A PNEUMATIC HAMMER AND CHISEL MAY BE USED ADJACENT TO THE CURB ONLY WHEN SAW CUTTING IS NOT POSSIBLE.
3. BLAST CLEAN THE JOINT AREA OF DEBRIS, ASPHALT AND SHEET MEMBRANE. THOROUGHLY DRY THE JOINT AREA WITH COMPRESSED AIR PRIOR TO APPLYING BINDER MATERIAL.
4. PLACE PROPERLY SIZED HEAT RESISTANT BACKER ROD IN THE MOVEMENT GAP ALLOWING FOR 1" +/- OF BINDER ABOVE THE ROD.
5. HEAT AND PLACE THE BINDER MATERIAL AS RECOMMENDED BY THE MANUFACTURER.
6. IMMEDIATELY AFTER TOP COATING, CAST AN ANTI-SKID MATERIAL OVER THE JOINT TO REDUCE THE RISK OF TRACKING.

WEATHER LIMITATIONS

APPLY BINDER MATERIAL ONLY WHEN THE FOLLOWING CONDITIONS PREVAIL OR AS RECOMMENDED BY THE MANUFACTURER:

1. THE AMBIENT AIR TEMPERATURE IS AT LEAST 10 DEG C (50 DEG F) AND RISING.
2. THE ROAD SURFACE IS DRY.
3. WEATHER CONDITIONS OR OTHER CONDITIONS ARE FAVORABLE AND ARE EXPECTED TO REMAIN SO FOR THE PERFORMANCE OF SATISFACTORY WORK.

DETAILS ON THIS SHEET ARE NOT TO SCALE.

| REVISIONS | |
|---|---|
| MAY 7, 2010 | APPROVED FOR USE BY VAOT STRUCTURES SECTION |
| AUGUST 29, 2011 | ADD DETAIL "B" AND REV. NOTES |
| | |
| | |
| | |
| | |
| | |
| | |

# BRIDGE JOINT
# ASPHALTIC PLUG

VERMONT AGENCY OF TRANSPORTATION
STRUCTURES - DIVISION

# STRUCTURES DETAIL
# SD-516.10

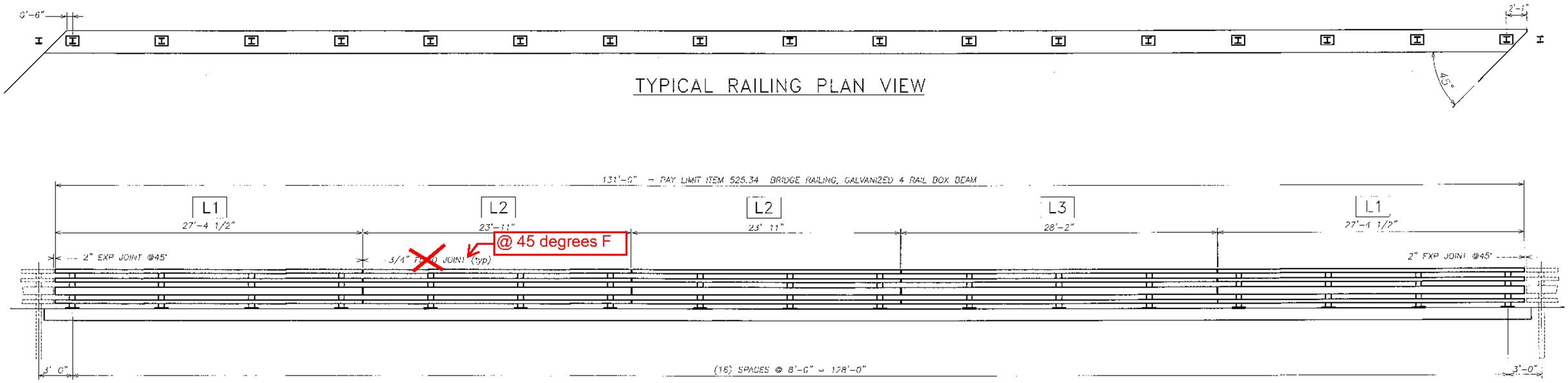


## TYPICAL RAILING PLAN VIEW

## TYPICAL RAILING ELEVATION

LOOKING AT FACE OF RAIL FROM CENTERLINE OF ROAD
BOTH SIDES TYPICAL

BILL OF MATERIAL

ITEM 525.34 BRIDGE RAILING, GALVANIZED 4 RAIL BOX BEAM (262 LF)

| Qty | mk | Description | Spec. |
|---|---|---|---|
| 34 | | BRIDGE RAILING POST W6 x 25 x 3'-5.375" OAH WITH 1 x 10 x 14 BASE PLATE (GLV) | A709 gr 50 |
| 8 | | SPLICE TUBE (FOR 8X4 RAIL) HSS 7 x 3 x 3/8 x 1'-8.000" OAL w/ TAPPED HOLES & 2 WELDED NUTS (GLV) | A500 gr B |
| 24 | | SPLICE TUBE (FOR 4X4 RAIL) HSS 3 x 3 x 5/16 x 1'-8.000" OAL w/ TAPPED HOLES & 2 WELDED NUTS (GLV) | A500 gr B |
| | | | |
| 4 | L1 | RAIL TUBE 8 x 4 x 5/16 (GALV) 27'-4.500" LG | A500 gr B |
| 4 | L2 | RAIL TUBE 8 x 4 x 5/16 (GALV) 23'-11.000" LG | A500 gr B |
| 2 | L3 | RAIL TUBE 8 x 4 x 5/16 (GALV) 28'-2.000" LG | A500 gr B |
| | | | |
| 12 | L1 | RAIL TUBE 4 x 4 x 1/4 (GALV) 27'-4.500" LG | A500 gr B |
| 12 | L2 | RAIL TUBE 4 x 4 x 1/4 (GALV) 23'-11.000" LG | A500 gr B |
| 6 | L3 | RAIL TUBE 4 x 4 x 1/4 (GALV) 28'-2.000" LG | A500 gr B |
| | | | |
| 34 | | ANCHOR SPACER PLATE PL 0.375 x 13.000 x 9.375 | A709 gr 36 |
| 138 | | ANCHOR STUD DBL END PART THREAD - 1" DIA x 14.000 LG (GLV) | A449 |
| 276 | | HEAVY HEX NUT 1" (GLV) | A563 DH |
| 138 | | ROUND WASHER (SAE) - 1" DIA SMALL (GLV) | F436 |
| 138 | | JAM NUT 1" (GALV) | A563 DH |
| | | | |
| 272 | | ROUND HEAD POST BOLT slot or wrench head - no shoulder 3/4" DIA x 6" LG. FULL BODY (GLV) | A449 / A325 |
| 272 | | LOCK NUT 3/4" (GLV) | A563 DH |
| 272 | | (3/4") PLAIN ROUND WASHER TYPE A (GALV) 0.750" DIA USS LARGE (HI-CARBON) | F844 |
| 128 | | (5/8") HEX HEAD BOLT (GALV) 0.625" DIA x 1.750" LG. | A325 |
| 128 | | (5/8") PLAIN ROUND WASHER (GALV) 0.625" USS LARGE | F844 |
| 64 | | 3/4" SPACER PIPE 0.750" DIA. (SCH 40) x 1/2" LG. | A53 gr B |
| 34 | | BEARING PAD 0.125" THICK x 10.000 x 14.000 (NEOPRENE 80 duro +/-10) | aashto M251 |

Vermont Agency of Transportation
RECEIVED
ON: May 19, 2015
and Checked for
CONFORMANCE
BY: Todd A. Sumner DATE: 05/27/2015

SUBMITTAL REVIEW
Review is only for general conformity to the contract drawings and specifications and shall not relieve the contractor of his entire responsibility under the contract, including, among other things, dimensions to be confirmed and correlated at the job site, and information that pertains to the fabrication processes or to techniques of construction.
☐ NO EXCEPTIONS TAKEN
☒ MAKE CORRECTIONS NOTED
RESUBMITTAL NOT REQUIRED
☐ AMEND AND RESUBMIT
☐ REJECTED - SEE REMARKS
PB AMERICAS, INC.
BY:
DATE: 5/26/15

| No. | Remarks | Date |
|---|---|---|
| A | miscellaneous review corrections | 5/26/15 |
| 0 | Initial submittal | 03-30-15 |

REVISIONS

HIGHWAY SAFETY CORP
GLASTONBURY, CT
860-633-9445

ITEM 525.34 BRIDGE RAILING, GALVANIZED 4 RAIL BOX BEAM
ITEM 621.73 GUARDRAIL APPROACH SECTION, GALVANIZED 4 RAIL BOX BEAM
TH1 EAST RIVER ROAD BRIDGE #19
TOWN OF LINCOLN, VT ADDISON COUNTY
BRF 0188 (8)

AISC CERTIFIED FABRICATOR

GENERAL CONTRACTOR
SUB CONTRACTOR LAFAYETTE

HSC JOB NO. 2041
SHEET NO. 1 of 4

DRAWN PAR CHECKED DATE 03-27-15 SCALE NONE SIZE D

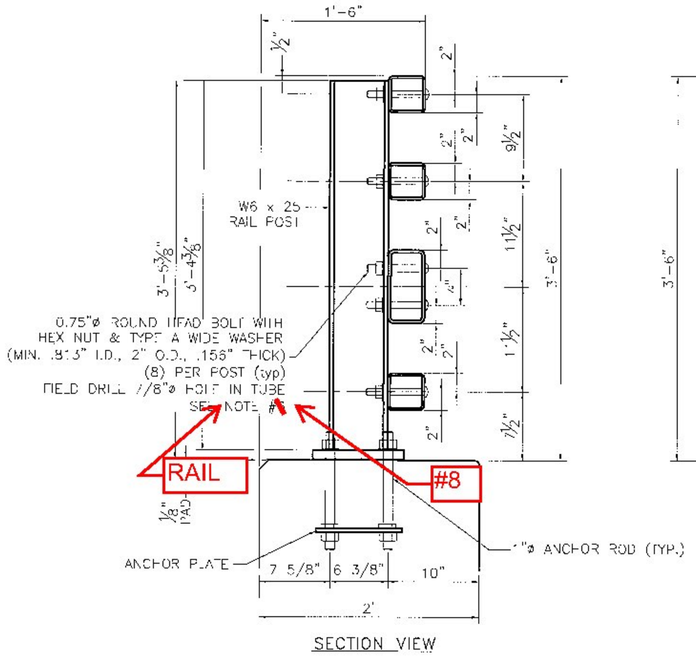


SECTION VIEW

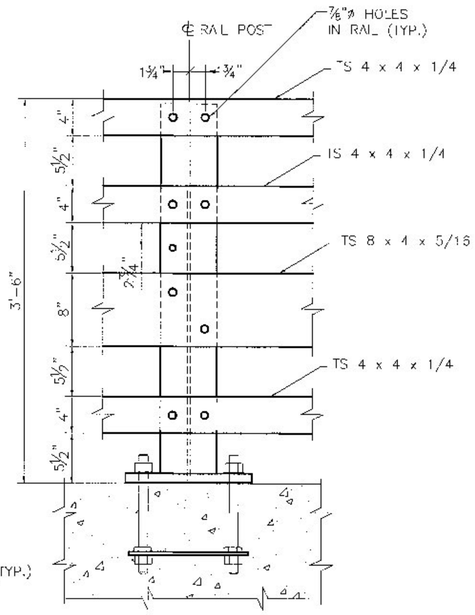


PARTIAL RAIL ELEVATION

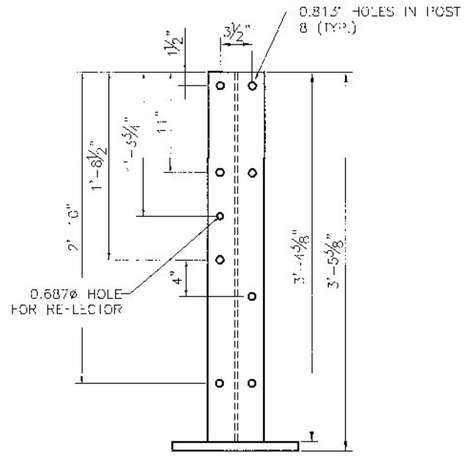


FRONT POST ELEVATION

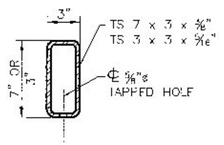


SPLICE TUBE
SECTION

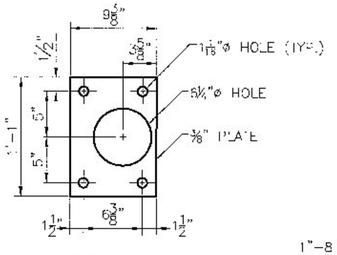


ANCHOR PLATE

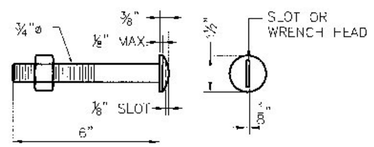


ROUND HEAD BOLT

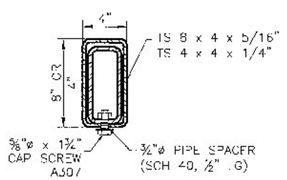


TYPICAL SPLICE
ASSEMBLY

SEE NOTE #6

RAIL

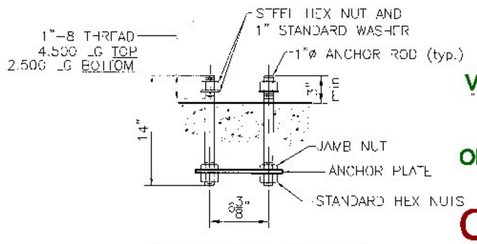


POST ANCHOR ASSEMBLY

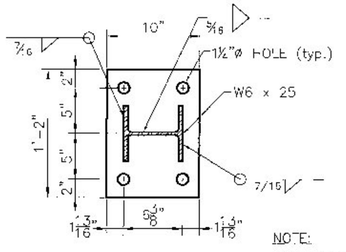


POST BASE PLATE
1" x 10" x 14" BASE PLATE

NOTE:
BEARING PAD TO HAVE SAME
SHAPE AND DIMENSIONS AS BASE
PLATE EXCEPT THICKNESS = 1/8"

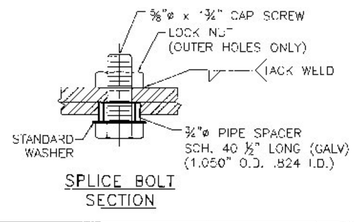


SPLICE BOLT
SECTION

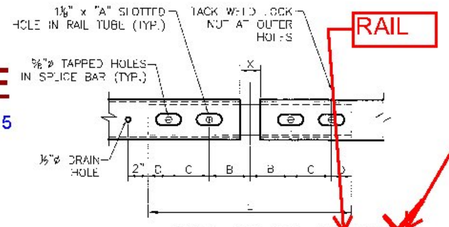


RAIL SPLICE SEE NOTE X

#6

| SPLICE & EXPANSION JOINT TABLE | | | | | | |
|---|---|---|---|---|---|---|
| "T" | "A" | "B" | "C" | "D" | "X" | "L" |
| INTERIOR | 2 1/2" | 4" | 4" | 2" | 3/4" | 1'-8" |
| ≤3 1/4" | 2 1/2" | 4" | 4" | 2" | 7" | 1'-8" |
| 3 1/4"<T≤5 1/4" | 3 1/2" | 5" | 5" | 2 1/2" | 9" | 2'-0" |

"T" = TOTAL REQUIRED MOVEMENT
* = END SPLICE BAR

Vermont Agency of Transportation
RECEIVED
ON: May 19, 2015
and Checked for
CONFORMANCE
BY: Todd A. Sumner DATE: 05/27/2015

RAIL NOTES:

1. ITEM 525.34, BRIDGE RAILING GALVANIZED 4 RAIL BOX BEAM SHALL INCLUDE POSTS, BASE PLATES, ANCHOR PLATES, ANCHOR RODS, PREFORMED PADS, RAIL ASSEMBLY BOLTS, NUTS, WASHERS, STUDS, STRUCTURAL TUBING, SPLICE BARS, PIPE SPACERS, ALL APPURTENANCES, AND GALVANIZING.

2. BRIDGE RAIL POSTS SHALL BE SET NORMAL (90 DEGREES) TO THE PROFILE GRADE, EXCEPT ON GRADES OVER 5% WHERE POSTS SHALL BE SET VERTICAL.

3. ENDS OF RAIL TUBE SECTIONS SHALL BE SAWED OR MILLED AND SHALL BE TRUE AND SMOOTH. ALL CUT EDGES OF ALL MATERIAL SHALL BE GROUND SMOOTH.

4. EACH PIECE OF RAIL TUBING SHALL BE ATTACHED TO A MINIMUM OF THREE (3) POSTS.

. All rails in a splice

5. BOLT HOLES SHALL BE DRILLED OR PUNCHED. FLAME CUTTING MAY BE USED TO FINISH SLOTTED HOLES IF MECHANICALLY GUIDED.

6. AT INTERIOR SPLICES, PIPE SPACERS SHALL BE USED ON ONLY ONE SIDE OF THE SPLICE TO ALLOW MOVEMENT ON THAT SIDE, THE TOP AND BOTTOM RAIL SHALL RECEIVE THE SAME TREATMENT, AT END SPLICES PIPE SPACERS SHALL BE USED ON BOTH SIDES OF THE SPLICE TO ALLOW MOVEMENT ON EACH SIDE.

7. MILL OR SHOP TRANSVERSE WELDS SHALL NOT BE PERMITTED ON ANY RAIL ELEMENT. RAIL ELEMENTS USED ON ~~CURVES~~ SHALL USE 3/8" WALL TUBES AND SHALL BE SHOP FORMED TO THE REQUIRED CURVATURE.

curves

8. NO PUNCHING, DRILLING, CUTTING OR WELDING SHALL BE PERMITTED AFTER GALVANIZING. EXCEPT AS ALLOWED IN DETAILS A & B. DAMAGED AREAS OF GALVANIZING SHALL BE THOROUGHLY CLEANED, PRETREATED, AND PAINTED WITH TWO COATS OF ORGANIC ZINC-RICH GALVANIZING REPAIR PAINT, HAVING MIN. 94% ZINC BY WEIGHT, TO A THICKNESS EQUAL TO THE ORIGINAL COATING ACCORDING TO THE STANDARD SPECIFICATIONS AND ASTM A780.

9. NUTS FOR 1"ø THREADED ANCHOR RODS CONNECTING THE BASE PLATE TO THE CONCRETE SHALL BE TIGHTENED TO A SNUG FIT AND GIVEN AN ADDITIONAL 1/8 TURN.

10. THREADS FOR ANCHOR RODS MAY BE ROLLED OR CUT. IF CUT THREADS ARE USED, BOLT DIA. SHALL NOT BE LESS THAN NOMINAL DIA., IF ROLLED THREADS ARE USED, ROD DIA. SHALL NOT BE LESS THAN ROOT DIA. OF THREADS.

MATERIAL NOTES:

IN ACCORDANCE WITH SECTION 525 AND THE FOLLOWING:

1. STRUCTURAL TUBING SHALL CONFORM TO THE REQUIREMENTS OF SUBSECTION 714.11 (ASTM A500, GRADE B, STRUCTURAL STEEL TUBING) RAIL TUBING SHALL MEET THE LONGITUDINAL CHARPY V-NOTCH REQUIREMENTS OF 15 FT/LBS AT 0° F. FOR ASTM A500, GRADE B, THE TEST SAMPLES SHALL BE TAKEN AFTER FORMING THE TUBES. CHARPY V-NOTCH IS NOT REQUIRED FOR SPLICE TUBES.

2. RAIL POSTS AND BASE PLATES SHALL CONFORM TO THE REQUIREMENTS OF ASTM A572 GR 50, EXCEPT ANCHOR PLATES ~~GR 50~~ A36. SEE SUBSECTION 732.03

3. 5/4"ø ROUND HEAD BOLTS SHALL BE ASTM A325 OR A449. ALL OTHER BOLTS AND NUTS SHALL CONFORM TO ASTM A307 AND ASTM 563 GRADE A RESPECTIVELY OR BETTER. ANCHOR RODS SHALL CONFORM TO ASTM A449 EXCEPT THAT ASTM A307 NUTS MAY BE USED ON THE BOTTOM OF ANCHOR ASSEMBLY. WASHERS SHALL BE HARDENED STEEL COMMERCIAL TYPE A PLAIN WIDE WASHERS AND SHALL MEET THE DIMENSIONAL REQUIREMENTS OF A.N.S.I. B18.22.

and nuts

4. IN ACCORDANCE WITH SUBSECTION 726.08, ALL STEEL COMPONENTS SHALL BE GALVANIZED AFTER FABRICATION IN CONFORMANCE TO AASHTO M232 (ASTM A153) AND AASHTO M111 (ASTM A123). THE GALVANIZING KETTLE SHALL HAVE 0.05 TO 0.09 PERCENT NICKEL. GALVANIZED SURFACES SHALL HAVE A UNIFORM APPEARANCE AND GALVANIZED MATERIAL SHALL BE PROPERLY STORED.

5. PREFORMED BEARING PADS (1/8" THICK) SHALL CONFORM TO AASHTO M251.

6. A DELINEATOR (SEE VAOT STANDARD DRAWING G-1 FOR DETAILS) SHALL BE INSTALLED AT NEAREST POST TO 30 FT SPACING. WHITE IS TO BE INSTALLED ON THE DRIVER'S RIGHT. ~~FOR ONE WAY BRIDGES, YELLOW IS TO BE INSTALLED ON THE DRIVER'S LEFT.~~ PAYMENT SHALL BE INCIDENTAL TO OTHER ITEMS.

SUBMITTAL REVIEW

Review is only for general conformity to the contract drawings and specifications and shall not relieve the contractor of his entire responsibility under the contract, including, among other things, dimensions to be confirmed and correlated at the job site, and information that pertains to the fabrication processes or to techniques of construction.

☐ NO EXCEPTIONS TAKEN
☒ MAKE CORRECTIONS NOTED
RESUBMITTAL NOT REQUIRED
☐ AMEND AND RESUBMIT
☐ REJECTED - SEE REMARKS

PB AMERICAS, INC.
BY:
DATE: 5/26/15

HIGHWAY SAFETY CORP
GLASTONBURY, CT
860-633-9445

ITEM 525.34 BRIDGE RAILING, GALVANIZED 4 RAIL BOX BEAM
ITEM 621.73 GUARDRAIL APPROACH SECTION, GALVANIZED 4 RAIL BOX BEAM
TH1 EAST RIVER ROAD BRIDGE #19
TOWN OF LINCOLN, VT ADDISON COUNTY
BRF 0188 (8)

CERTIFIED FABRICATOR

GENERAL CONTRACTOR
SUB CONTRACTOR LAFAYETTE
PROJ. NO. 2041
SHEET NO. 2 of 4
DRAWN PAR CHECKED DATE 03-27-15 SCALE NONE SIZE D

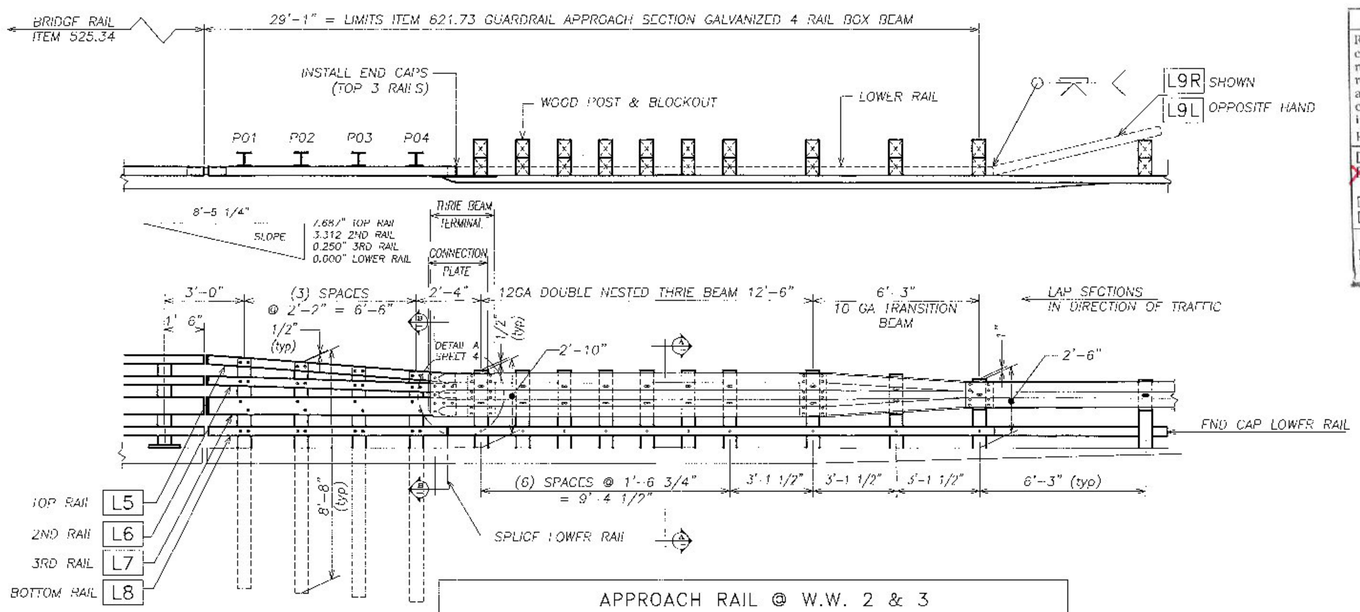


APPROACH RAIL @ W.W. 2 & 3

W.W. 1 APPROACH RAIL IS SIMILAR BUT OPPOSITE HAND

BILL OF MATERIAL

ITEM 621.73 GUARDRAIL APPROACH SECTION GALVANIZED 4 RAIL BOX BEAM (3 EA)

| Qty | mk | Description | Spec. |
|---|---|---|---|
| 3 | P01 | W6x25 APPROACH POST - #1 x 8'-8" OAL (GALV) | A709 gr 50 |
| 3 | P02 | W6x25 APPROACH POST - #2 x 8'-8" OAL (GALV) | A709 gr 50 |
| 3 | P03 | W6x25 APPROACH POST - #3 x 8'-8" OAL (GALV) | A709 gr 50 |
| 3 | P04 | W6x25 APPROACH POST - #4 x 8'-8" OAL (GALV) | A709 gr 50 |
| | | | |
| 3 | L5 | UPPER RAIL APPROACH TUBE TS 4 x 4 x 1/4" (GALV.) 9'-4.000" OAL | A500 Gr. B |
| 3 | L6 | SECOND RAIL APPROACH TUBE TS 4 x 4 x 1/4" (GALV.) 9'-4.000" OAL | |
| 3 | L7 | THIRD RAIL APPROACH TUBE TS 8 x 4 x 5/16" (GALV.) 9'-4.000" OAL | A500 Gr. B |
| 3 | L8 | LOWER RAIL APPROACH TUBE TS 4 x 4 x 1/4" (GALV.) 8'-11.625" OAL | A500 Gr. B |
| 2 | L9R | RIGHT HAND FLAREBACK TS 4 x 4 x 1/4 (GLV) 27"-0.4375" OAL | A500 Gr. B |
| 1 | L9L | LEFT HAND FLAREBACK TS 4 x 4 x 1/4 (GLV) 27"-0.4375" OAL | A500 Gr. B |
| | | | |
| 3 | | CONNECTION PLATE PL 0.375" x 20.000" x 27.000" (GALV) | A709 gr 36 |
| 3 | | END CAP FOR 8x4 TUBE 0.187 THICK PLATE 8.000 x 4.000 w/ WELDED TABS (GALV) | A709 gr 36 |
| 9 | | END CAP FOR 4x4 TUBE 0.187 THICK PLATE 4.000 x 4.000 w/ WELDED TABS (GALV) | A709 gr 36 |
| 3 | | top rail SPLICE TUBE HSS 3 x 3 x 5/16 x 1'-8.000" OAL w/ TAPPED HOLES & 2 WELDED NUTS (GLV) **(angled down)** | A500 gr B |
| 3 | | 2nd rail SPLICE TUBE HSS 3 x 3 x 5/16 x 1'-8.000" OAL w/ TAPPED HOLES & 2 WELDED NUTS (GLV) **(angled down)** | A500 gr B |
| 3 | | 3rd rail SPLICE TUBE (FOR 8X4 RAIL) HSS 7 x 3 x 3/8 x 1'-8.000" OAL w/ TAPPED HOLES & 2 WELDED NUTS (GLV) straight | A500 gr B |
| 3 | | bottom rail SPLICE TUBE (FOR 4X4 RAIL) HSS 3 x 3 x 5/16 x 1'-8.000" OAL w/ TAPPED HOLES & 2 WELDED NUTS (GLV) straight | A500 gr B |
| | | | |
| 24 | 4RR | WOOD POST 6 x 8 x 7'-0" (for thrie beam w/ rub rail hole) | TIMBER |
| 24 | | WOOD BLOCKOUT 6 x 8 x 22.500 | TIMBER |
| 3 | TRR | WOOD POST 6 x 8 x 7'-0" (for thrie transition w/ rub rail hole) | TIMBER |
| 3 | | WOOD BLOCKOUT 6 x 8 x 18.000 | TIMBER |
| 3 | R | WOOD POST 6 x 8 x 7'-0" (for w-beam rail w/ rub rail hole) | TIMBER |
| 3 | | WOOD BLOCKOUT 6 x 8 x 14.000 | TIMBER |
| | | | |
| 30 | | WOOD BLOCKOUT 6 x 8 x 4.000 (for rubrail blockout) | TIMBER |
| | | | |
| 3 | | THRIE FLAT LIP BRIDGE SHOE (MODIFIED) 10 GA. GALV | aashto M180 B2 |
| 3 | | THRIE TRANSITION PANEL 6'-3" / 3'-1 1/2" 10 GA. GALV. | aashto M180 B2 |
| 6 | | THRIE PANEL 12'-6" / 1'-6 3/4" 12 GA. GALV. | aashto M180 A2 |
| | | | |
| 120 | | ROUND HEAD POST BOLT slot or wrench head - no shoulder 3/4" DIA x 6" LG. FULL BODY (GLV) | A449 / A325 |
| 120 | | LOCK NUT 3/4" (GLV) | A563 DH |
| 120 | | (3/4") PLAIN ROUND WASHER TYPE A (GALV) 0.750" DIA USS LARGE (HI-CARBON) | F844 |
| 48 | | (5/8") HEX HEAD BOLT (GALV) 0.625" DIA x 1.750" LG. | A325 |
| 48 | | (5/8") PLAIN ROUND WASHER (GALV) 0.625" USS LARGE | F844 |
| 48 | | 3/4" SPACER PIPE 0.750" DIA. (SCH 40) x 1/2" LG. | A53 gr B |
| 3 | | ROUND HEAD POST BOLT slot or wrench head - no shoulder 3/4" DIA x 2" LG. (GLV) w/ HEX NUT | A449 |
| 48 | | ROUND HEAD POST BOLT - oval shoulder 5/8" DIA x 1'-8" LG. (GALV) w/ DBL RECESS NUT, FLAT WASHER | A307 |
| 36 | | ROUND HEAD POST BOLT - oval shoulder 5/8" DIA x 1'-6" LG. (GALV) w/ DBL RECESS NUT, FLAT WASHER | A307 |
| 96 | | PANEL SPLICE BOLT 5/8 x 1-1/4" (GALV) w/ DOUBLE RECESSED NUT | A307 |
| 84 | | RECTANGULAR PLATE WASHER 0.187 x 1.750 x 3.000 (GALV) | A709 gr 36 |

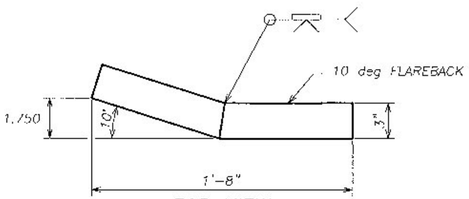


TOP VIEW
NOT TO SCALE

SHOWING 10deg ANCLED FLAREBACK
(TYPICAL ALL SPLICES AT WW4 APPROACH)
SEE SHEET 2 FOR ADDITIONAL SPLICE DIMENSIONS

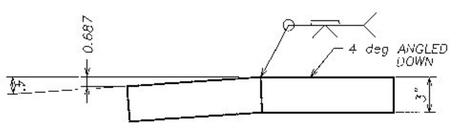


FRONT VIEW
NOT TO SCALE
(TYPICAL 3x3 SPLICES AT WW4 APPROACH)
SHOWING 4deg ANGLED DOWNWARD

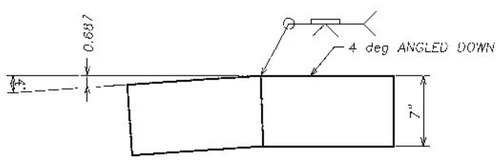


FRONT VIEW
NOT TO SCALE
(TYPICAL 7x3 SPLICES AT WW4 APPROACH)
SHOWING 4deg ANGLED DOWNWARD

SUBMITTAL REVIEW

Review is only for general conformity to the contract drawings and specifications and shall not relieve the contractor of his entire responsibility under the contract, including among other things, dimensions to be confirmed and correlated at the jobsite, and information that pertains to the fabrication processes or to techniques of construction.

☐ NO EXCEPTIONS TAKEN
☒ MAKE CORRECTIONS NOTED
RESUBMITTAL NOT REQUIRED
☐ AMEND AND RESUBMIT
☐ REJECTED - SEE REMARKS

PB AMERICAS, INC.
BY: Ada M. Hood
DATE: 5/26/15

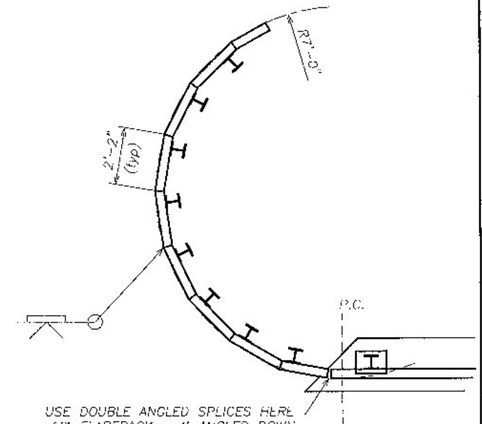


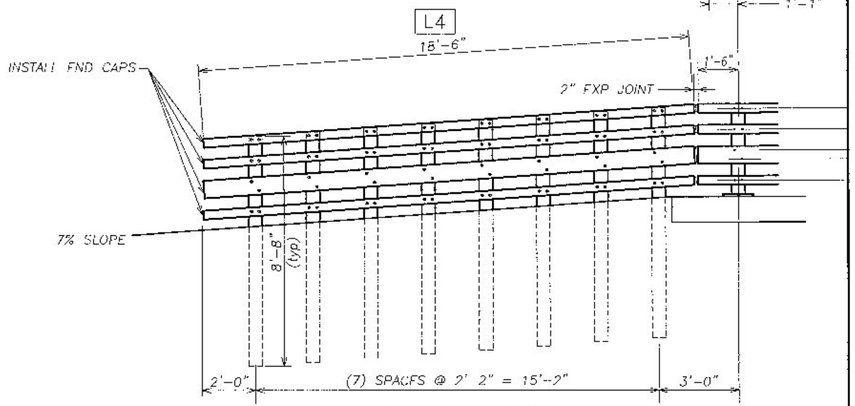


APPROACH RAIL @ W.W. 4

BILL OF MATERIAL

ITEM 621.73 GUARDRAIL APPROACH SECTION GALVANIZED 4 RAIL BOX BEAM (1 FA @ WW 4)

| Qty | mk | Description | Spec. |
|---|---|---|---|
| 8 | WW4 | W6x25 APPROACH POST x 8'-8" OAL (GALV) | A709 gr 50 |
| 1 | | DBL ANGLE SPLICE (FOR 8X4 RAIL) HSS 7x3x3/8 x 1'-8.000" OAL w/ TAP HOLES & 2 WELD NUTS (GLV) **(flareback 10 deg/angle 4 deg)** | A500 gr B |
| 3 | | DBL ANGLE SPLICE (FOR 4X4 RAIL) HSS 3x3x5/16 x 1'-8.000" OAL w/ TAP HOLES & 2 WELD NUTS (GLV) **(flareback 10 deg/angle 4 deg)** | A500 gr B |
| | | | |
| 1 | L4 | RAIL TUBE 8 x 4 x 5/16 (GALV) 18'-6.000" LG **miter cut & weld for 7' radius** | A500 gr B |
| 3 | L4 | RAIL TUBE 4 x 4 x 1/4 (GALV) 18'-6.000" LG **miter cut & weld for 7' radius** | A500 gr B |
| | | | |
| 1 | | END CAP FOR 8x4 TUBE 0.187 THICK PLATE 8.000 x 4.000 w/ WELDED TABS (GALV) | A709 gr 36 |
| 3 | | END CAP FOR 4x4 TUBE 0.187 THICK PLATE 4.000 x 4.000 w/ WELDED TABS (GALV) | A709 gr 36 |
| | | | |
| 64 | | ROUND HEAD POST BOLT slot or wrench head - no shoulder 3/4" DIA x 6" LG. FULL BODY (GLV) | A449 / A325 |
| 64 | | LOCK NUT 3/4" (GLV) | A563 DH |
| 64 | | (3/4") PLAIN ROUND WASHER TYPE A (GALV) 0.750" DIA USS LARGE (HI-CARBON) | F844 |
| 16 | | (5/8") HEX HEAD BOLT (GALV) 0.625" DIA x 1.750" LG. | A325 |
| 16 | | (5/8") PLAIN ROUND WASHER (GALV) 0.625" USS LARGE | F844 |
| 16 | | 3/4" SPACER PIPE 0.750" DIA. (SCH 40) x 1/2" LG. | A53 gr B |

Vermont Agency of Transportation
RECEIVED
ON: May 19, 2015
and Checked for
CONFORMANCE
BY: Todd A. Sumner DATE: 05/27/2015

HIGHWAY SAFETY CORP
GLASTONBURY, CT
860-633-9445

ITEM 525.34 BRIDGE RAILING, GALVANIZED 4 RAIL BOX BEAM
ITEM 621.73 GUARDRAIL APPROACH SECTION, GALVANIZED 4 RAIL BOX BEAM
TH1 EAST RIVER ROAD BRIDGE #19
TOWN OF LINCOLN, VT ADDISON COUNTY
BRF 0188 (8)

AISC CERTIFIED FABRICATOR

GENERAL CONTRACTOR
SUB CONTRACTOR LAFAYETTE

HSC JOB NO. 2041
SHEET NO. 3 of 4

| DRAWN | CHECKED | DATE | SCALE | SIZE |
|---|---|---|---|---|
| PAR | | 03-27-15 | NONE | D |

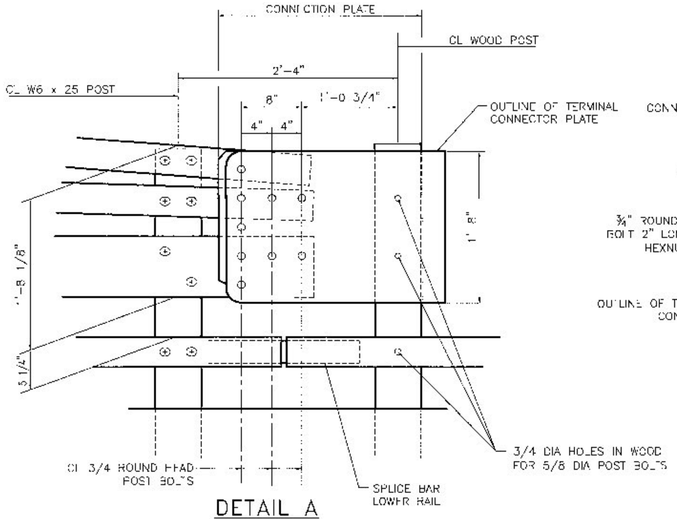


## DETAIL A

FROM SHEET 3

PORTIONS OF OVERLAPPING THRIE BEAM RAIL AND TERMINAL CONNECTOR ELIMINATED FROM THIS VIEW FOR CLARITY

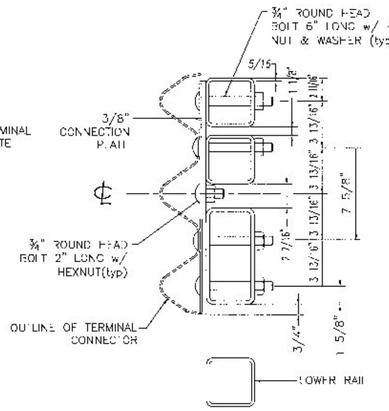


## SECTION B-B

FROM SHEET 3

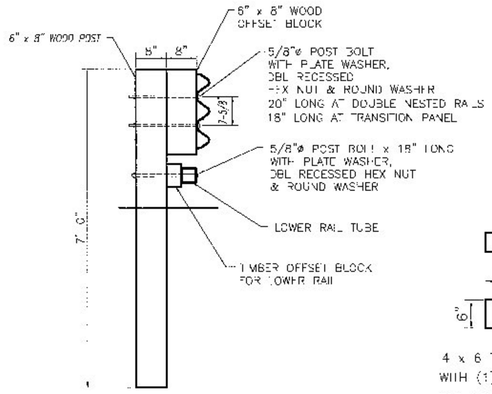


## SECTION A-A

FROM SHEET 3

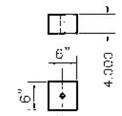


4 x 6 TIMBER BLOCK WITH (1) 3/4"ø THRU HOLE FOR LOWER RAIL

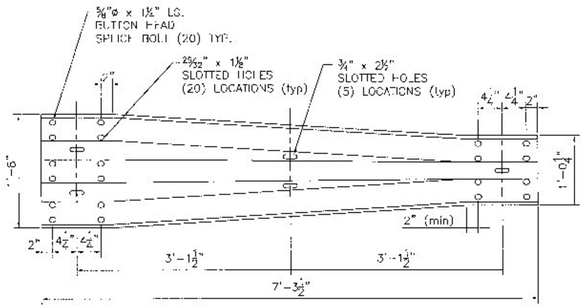


## THRIE TRANSITION PANEL

10 GAUGE (AASHTO M180 B2)

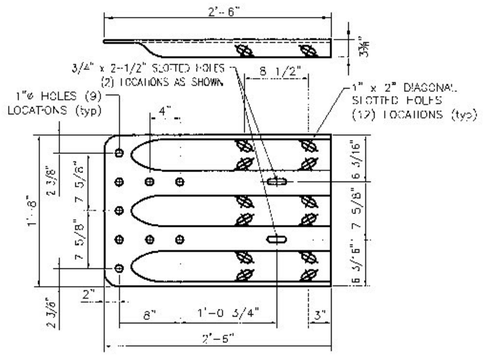


## TERMINAL CONNECTOR

10 GAUGE (AASHTO M180 B2)

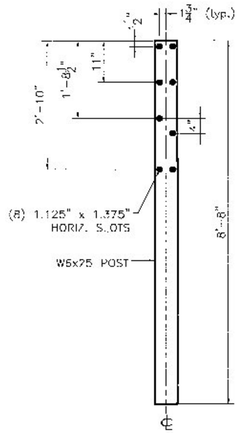


## STEEL POST

AT WINGWALL 4

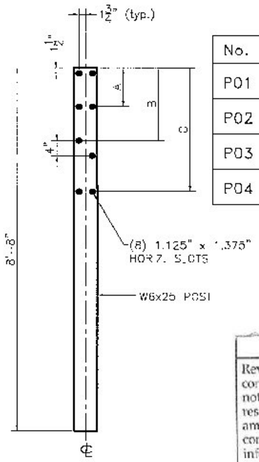


## STEEL POST

AT WINGWALLS 1, 2 & 3

STEEL POST CHART

| No. | A | B | C |
|---|---|---|---|
| P01 | 10.250 | 19.250 | 32.687 |
| P02 | 9.125 | 17.312 | 30.750 |
| P03 | 8.000 | 15.437 | 28.750 |
| P04 | 6.875 | 13.500 | 26.875 |

26.875"

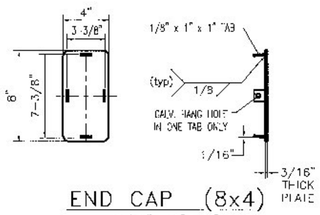


## END CAP (8x4)

3/16" x 8" x 4"

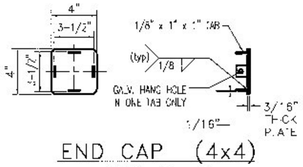


## END CAP (4x4)

3/16" x 4" x 4"

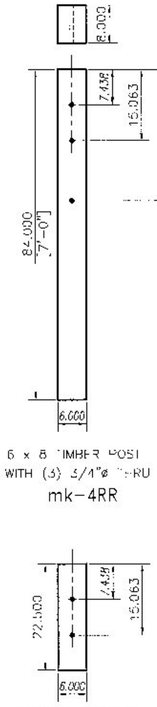


6 x 8 TIMBER POST WITH (3) 3/4"ø THRU HOLES

mk-4RR

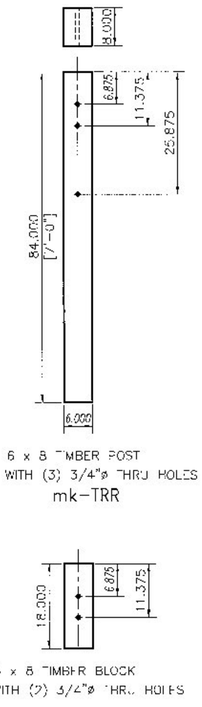


6 x 8 TIMBER POST WITH (3) 3/4"ø THRU HOLES

mk-TRR

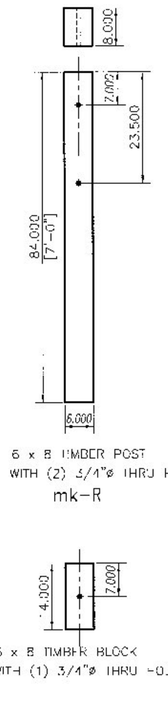


6 x 8 TIMBER POST WITH (2) 3/4"ø THRU HOLE

mk-R




6 x 8 TIMBER BLOCK WITH (2) 3/4"ø THRU HOLES




6 x 8 TIMBER BLOCK WITH (2) 3/4"ø THRU HOLES




6 x 8 TIMBER BLOCK WITH (1) 3/4"ø THRU HOLE

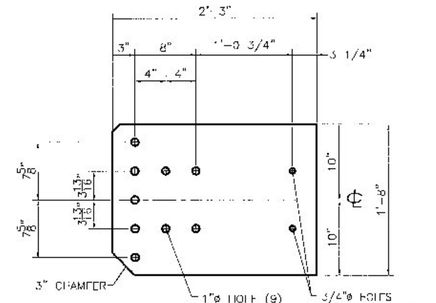


## CONNECTION PLATE

3/8" x 1'-8" x 2'-3"

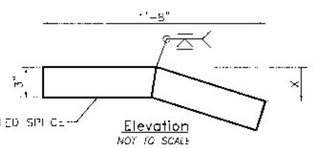


ANGLED SPLICE DIMENSION

SEE SHEET 2 FOR ADDITIONAL SPLICE DETAILS

| X | |
|---|---|
| TOP SPLICE | SECOND SPLICE |
| .887" | .375" |

NOTE: THIRD SPLICE TO BE PROVIDED STRAIGHT DUE TO A VERY SHALLOW "X" DIMENSION.

SUBMITTAL REVIEW

Review is only for general conformity to the contract drawings and specifications and shall not relieve the contractor of his entire responsibility under the contract, including, among other things, dimensions to be confirmed and correlated at the job site, and information that pertains to the fabrication processes or to techniques of construction.

☐ NO EXCEPTIONS TAKEN
☒ MAKE CORRECTIONS NOTED
RESUBMITTAL NOT REQUIRED
☐ AMEND AND RESUBMIT
☐ REJECTED - SEE REMARKS

PB AMERICAS, INC.
BY: Alda M. Stack
DATE: 5/26/15

NOTES:

1. ALL BRIDGE APPROACH RAIL MATERIALS, DIMENSIONS, SIZES, AND NOTES SHALL BE THE SHAME AS THOSE OF THE BRIDGE RAIL UNLESS OTHERWISE NOTED. SEE BRIDGE RAIL SHEETS FOR NOTES AND ADDITIONAL INFORMATION.
2. CARRAGE BOLTS SHALL BE ASTM A307, AND NUTS SHALL BE ASTM A563 GRADE A OR BETTER (GALVANIZED).
3. WELD SPLICE BAR AND RAIL TUBES TO FIT BEND. USE COMPLETE JOINT PENETRATION BUTT WELD (E-70).
4. PAYMENT FOR GUARDRAIL APPROACH SECTION, GALVANIZED 4 RAIL BOX BEAM SHALL INCLUDE THE TERMINAL CONNECTOR, THE CONNECTION PLATE, RAIL, POSTS, BLOCKS AND ATTACHMENT HARDWARE.
5. ALL APPROACH SPLICES SHALL BE TAPPED IN THE DIRECTION OF TRAFFIC
6. SEE SHEET 3 FOR ADDITIONAL MODIFIED APPROACH DETAILS AT WINGWALL 4

Vermont Agency of Transportation

RECEIVED

ON: May 19, 2015

and Checked for

CONFORMANCE

BY: Todd A. Sumner DATE: 05/27/2015

HIGHWAY SAFETY CORP
GLASTONBURY, CT
860-633-9445

ITEM 525.34 BRIDGE RAILING, GALVANIZED 4 RAIL BOX BEAM
ITEM 621.73 GUARDRAIL APPROACH SECTION, GALVANIZED 4 RAIL BOX BEAM
TH1 EAST RIVER ROAD BRIDGE #19
TOWN OF LINCOLN, VT ADDISON COUNTY
BRF 0188 (8)

NSC CERTIFIED FABRICATOR

NSC JOB NO. 2041

GENERAL CONTRACTOR

SUB CONTRACTOR LAFAYETTE

SHEET NO. 4 of 4

| DRAWN | CHECKED | DATE | SCALE | REV |
|---|---|---|---|---|
| PAR | | 03-27-15 | NONE | D |

File 5.1.2

| | | | |
|---|---|---|---|
| Contractor: | J.A. McDonald | | |
| Job Name: | Lincoln BRF 0188 (8) | | |
| Location: | Lincoln, Vt. | | |
| Job # | 167-15 | Date: | 5/26/2015 |

CAMP Precast Concrete Products, Inc.
78 Precast Road, Milton, VT 05468
Phone (802) 893-2401 Fax (802) 893-

**Product I.D.** DI 501 + 69.00 LT **Diameter:** 48"

Invert: No Ladders: No Coating: No Access Size: 24" x 24"

Cast Iron / Hatch: Neenah R-3405 Frame & Type E Cascade Grate (4-flange)

| | | | | | | | | | |
|---|---|---|---|---|---|---|---|---|---|
| Rim: | 997.55 | Cone: | | Riser#1: | | Riser#4: | | | |
| Inv. Out: | 993.37 | Cover: | 12" | Riser#2: | | Riser#5: | | | |
| Diff: | 4.18 | Base: | 3' | Riser#3: | | Riser#6: | | | |
| Sump: | 0.53 | | | | | | | | |
| Gross V.F.: | 4.71 | Angle | 0 | | | | | | |
| C.I. Height: | 0.50 | Boot: | 8022 | | | | | | |
| Net V.F.: | 4.21 | Dist. Up: | 15" to ctr | | | | | | |
| Brick Space: | 0.21 | Pipe Type: | HDPE | | | | | | |
| Actual V.F. | 4.00 | Pipe Size: | 18" | | | | | | |

**Quality Control**

**Prepour**

Form Cleaning: Form Release:
Rein. Steel: Std. Spec. Form Closure:
Block Out: Rein. Size:
Comments: Q.C. by/date:

**Postpour**

Finish: Bricking:
Invert: Ladders:
Coating: Boots:
Comments: Q.C. by/date:

Special Info. / Comments: **VT AOT Specs including 8" thick base**

Mold #: YDS³ Wt.

**BASE**

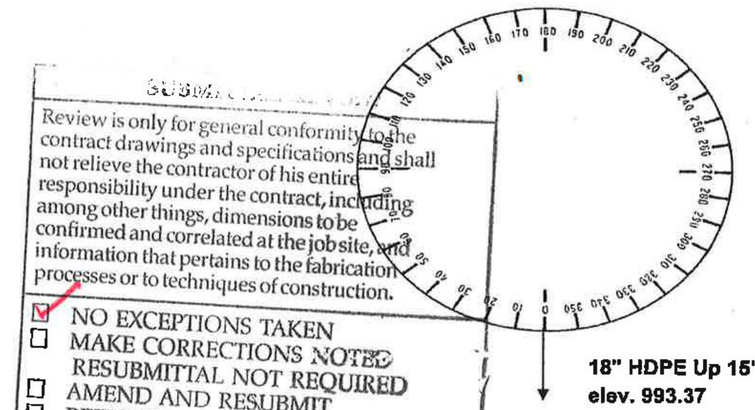





Vermont Agency of Transportation
RECEIVED
ON: June 19, 2015
and Checked for
CONFORMANCE
BY: Todd A. Sumner DATE: 06/24/2015

File 5.1.2

| | | | |
|---|---|---|---|
| Contractor: | J.A. McDonald | | |
| Job Name: | Lincoln BRF 0188 (8) | | |
| Location: | Lincoln, Vt. | | |
| Job # | 167-15 | Date: | 6/19/2015 |

CAMP Precast Concrete Products, Inc.
78 Precast Road, Milton, VT 05468
Phone (802) 893-2401 Fax (802) 893-

**Product I.D.** DI 506 + 14 **Diameter:** 60"

Invert: No Ladders: No Coating: No Access Size: 24" x 48"

Cast Iron / Hatch: Neenah R-3587-4

| | | | | | | | | | |
|---|---|---|---|---|---|---|---|---|---|
| Rim: | 1001.26 | Cone: | | Riser#1: | | Riser#4: | | | |
| Inv. Out: | 996.58 | Cover: | 13" (special) | Riser#2: | | Riser#5: | | | |
| Diff: | 4.68 | Base: | 3' | Riser#3: | | Riser#6: | | | |
| Sump: | 0.50 | | | | | | | | |
| Gross V.F.: | 5.18 | Angle | 0 | | | | | | |
| C.I. Height: | 0.67 | Boot: | 8029 | | | | | | |
| Net V.F.: | 4.51 | Dist. Up: | 18" to ctr | | | | | | |
| Brick Space: | 0.43 | Pipe Type: | HDPE | | | | | | |
| Actual V.F. | 4.08 | Pipe Size: | 24" | | | | | | |

**Quality Control**

**Prepour**

Form Cleaning: Form Release:
Rein. Steel: Std. Spec. Form Closure:
Block Out: Rein. Size:
Comments: Q.C. by/date:

**Postpour**

Finish: Bricking:
Invert: Ladders:
Coating: Boots:
Comments: Q.C. by/date:

Special Info. / Comments: **VT AOT Specs including 8" thick base**

Mold #: YDS³ Wt.

**BASE**

**SUBMITTAL REVIEW**

Review is only for general conformity to the contract drawings and specifications and shall not relieve the contractor of his entire responsibility under the contract, including among other things, dimensions to be confirmed and correlated at the job site, and information that pertains to the fabrication processes or to techniques of construction.

- ☑ NO EXCEPTIONS TAKEN
- ☐ MAKE CORRECTIONS NOTED RESUBMITTAL NOT REQUIRED
- ☐ AMEND AND RESUBMIT
- ☐ REJECTED - SEE REMARKS

PB AMERICAS, INC.
BY: JMR
DATE: 6/23/15

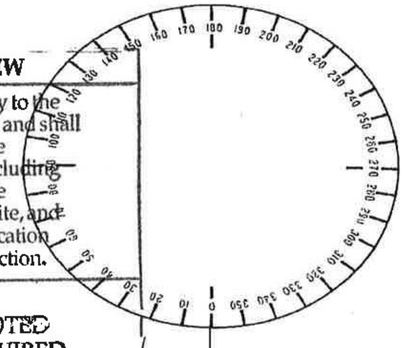

**24" HDPE Up 18" To CTR.**
**elev. 996.58**

Vermont Agency of Transportation
RECEIVED
ON: June 23, 2015
and Checked for
CONFORMANCE
BY: Todd A. Sumner DATE: 06/24/2015

File 5.1.2

| | | | |
|---|---|---|---|
| Contractor: | J.A. McDonald | | |
| Job Name: | Lincoln BRF 0188 (8) | | |
| Location: | Lincoln, Vt. | | |
| Job # | 167-15 | Date: | 6/19/2015 |

CAMP Precast Concrete Products, Inc.
78 Precast Road, Milton, VT 05468
Phone (802) 893-2401 Fax (802) 893-1542

**Product I.D.** DI 506 + 14 **Diameter:** 60"

Invert: No Ladders: No Coating: No Access Size: 24" x 48"

Cast Iron / Hatch: Neenah R-3587-4

| | | | | | | | | | |
|---|---|---|---|---|---|---|---|---|---|
| Rim: | 1001.26 | Cone: | | Riser#1: | | Riser#4: | | | |
| Inv. Out: | 996.58 | Cover: | 13" (special) | Riser#2: | | Riser#5: | | | |
| Diff: | 4.68 | Base: | 3' | Riser#3: | | Riser#6: | | | |
| Sump: | 0.50 | | | | | | | | |
| Gross V.F.: | 5.18 | Angle | | | | | | | |
| C.I. Height: | 0.67 | Boot: | | | | | | | |
| Net V.F.: | 4.51 | Dist. Up: | | | | | | | |
| Brick Space: | 0.43 | Pipe Type: | | | | | | | |
| Actual V.F. | 4.08 | Pipe Size: | | | | | | | |

**Quality Control**

**Prepour**
Form Cleaning: Form Release:
Rein. Steel: Std. Spec. Form Closure:
Block Out: Rein. Size:
Comments: Q.C. by/date:

**Postpour**
Finish: Bricking:
Invert: Ladders:
Coating: Boots:
Comments: Q.C. by/date:

Special Info. / Comments: **VT AOT Specs including 8" thick base**

Mold #: YDS³ Wt.

**PLAN / FLIPPED**

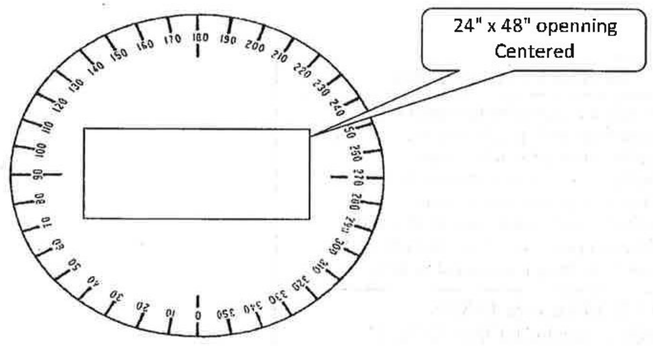


**COVER**

Vermont Agency of Transportation
RECEIVED
ON: June 23, 2015
and Checked for
CONFORMANCE
BY: Todd A. Sumner DATE: 06/24/2015

Vermont Agency of Transportation

RECEIVED

ON: June 23, 2015

and Checked for

CONFORMANCE

BY: Todd A. Sumner DATE: 06/24/2015

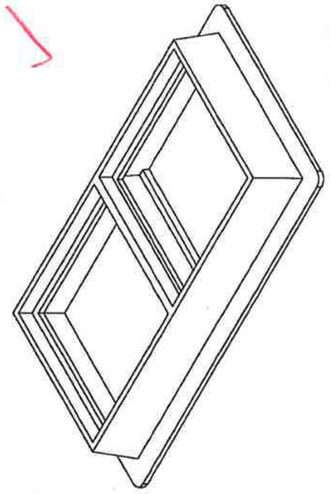

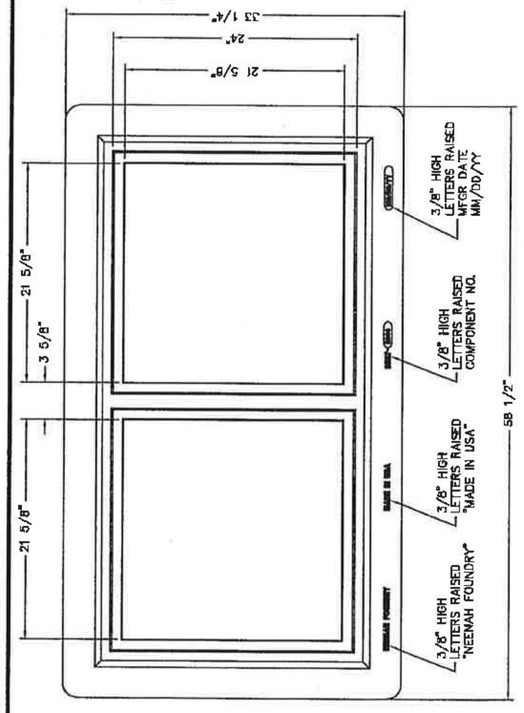


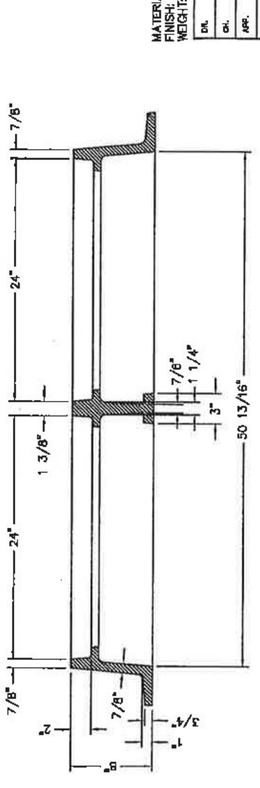


MATERIAL: CAST GRAY IRON ASTM A-48, CLASS 35B
FINISH: NO PAINT UNLESS SPECIFIED ON PURCHASE ORDER
WEIGHT: 516#

| | | | |
|---|---|---|---|
| DR. RKB | SCALE 1/8"=1" | TITLE R-3587 FRAME | NF-35872004 B |
| CH. | | | |
| APP. | DW. CHK. | NEENAH FOUNDRY COMPANY | |
| DATE 12-21-2010 | | | |
| www.neenahfoundry.com | | PHONE: 1-800-558-5075 | |

CAD DWG. REF: 3587/2004.DWG- 1

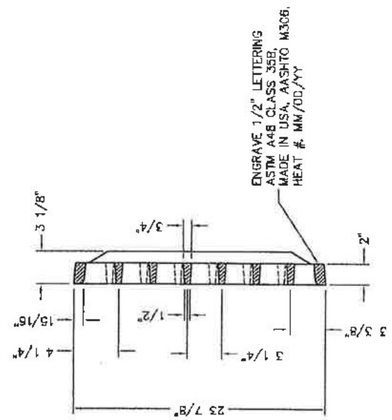


NOTE: ALL DIMENSIONS SHOWN ARE IN ENGLISH
MEETS AASHTO M306 40,000# PROOF LOAD REQUIREMENTS.
MATERIAL: CAST GRAY IRON ASTM A-48, CLASS 35B
FREE OPEN AREA: 1.6 SQ. FT.
FINISH: NO PAINT
WEIGHT: 153#

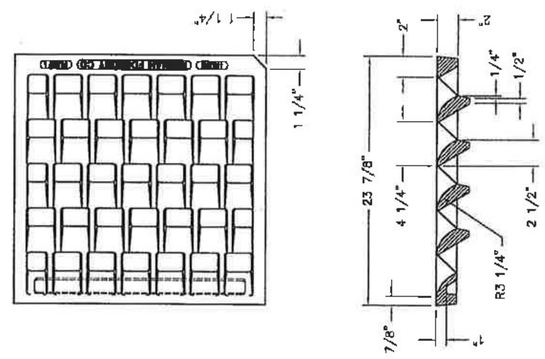


| | | | |
|---|---|---|---|
| DR. CSK | SCALE 1/8"=1" | TITLE R-3588-L TYPE "L" FLOW LEFT GRATE FOR NEW HAMPSHIRE TYPE "FL" | |
| CH. | | | |
| APP. | DWN CHK. | NEENAH FOUNDRY COMPANY NEENAH WISCONSIN 54956 | NF-35883010 B |
| DATE 01-10-1996 | | | |

CAD DWG. REF: 35883010.DWG- 3

Vermont Agency of Transportation
RECEIVED
ON: June 23, 2015
and Checked for
CONFORMANCE
BY: Todd A. Sumner DATE: 06/24/2015

File 5.1.2

| | | | |
|---|---|---|---|
| Contractor: | J.A. McDonald | | |
| Job Name: | Lincoln BRF 0188 (8) | | |
| Location: | Lincoln, Vt. | | |
| Job # | 167-15 | Date: | 6/19/2015 |

CAMP Precast Concrete Products, Inc.
78 Precast Road, Milton, VT 05468
Phone (802) 893-2401 Fax (802) 893-

**Product I.D.** DI 506 + 14 **Diameter:** 60"

Invert: No Ladders: No Coating: No Access Size: 24" x 48"

Cast Iron / Hatch: Neenah R-3587-4

| | | | | | | | | | |
|---|---|---|---|---|---|---|---|---|---|
| Rim: | 1001.26 | Cone: | | Riser#1: | | Riser#4: | | | |
| Inv. Out: | 996.58 | Cover: | 13" (special) | Riser#2: | | Riser#5: | | | |
| Diff: | 4.68 | Base: | 3' | Riser#3: | | Riser#6: | | | |
| Sump: | 0.50 | | | | | | | | |
| Gross V.F.: | 5.18 | Angle | 0 | | | | | | |
| C.I. Height: | 0.67 | Boot: | 8029 | | | | | | |
| Net V.F.: | 4.51 | Dist. Up: | 18" to ctr | | | | | | |
| Brick Space: | 0.43 | Pipe Type: | HDPE | | | | | | |
| Actual V.F. | 4.08 | Pipe Size: | 24" | | | | | | |

**Quality Control**

**Prepour**

Form Cleaning: Form Release:
Rein. Steel: Std. Spec. Form Closure:
Block Out: Rein. Size:
Comments: Q.C. by/date:

**Postpour**

Finish: Bricking:
Invert: Ladders:
Coating: Boots:
Comments: Q.C. by/date:

Special Info. / Comments: **VT AOT Specs including 8" thick base**

Mold #: YDS³ Wt.

**BASE**

**SUBMITTAL REVIEW**

Review is only for general conformity to the contract drawings and specifications and shall not relieve the contractor of his entire responsibility under the contract, including among other things, dimensions to be confirmed and correlated at the job site, and information that pertains to the fabrication processes or to techniques of construction.

- ☑ NO EXCEPTIONS TAKEN
- ☐ MAKE CORRECTIONS NOTED RESUBMITTAL NOT REQUIRED
- ☐ AMEND AND RESUBMIT
- ☐ REJECTED - SEE REMARKS

PB AMERICAS, INC.
BY: JMR
DATE: 6/23/15

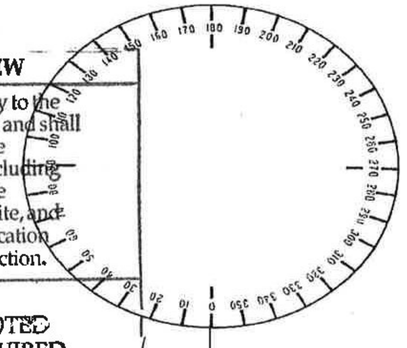

**24" HDPE Up 18" To CTR.**
**elev. 996.58**

Vermont Agency of Transportation
RECEIVED
ON: June 23, 2015
and Checked for
CONFORMANCE
BY: Todd A. Sumner DATE: 06/24/2015

File 5.1.2

| | | | |
|---|---|---|---|
| Contractor: | J.A. McDonald | | |
| Job Name: | Lincoln BRF 0188 (8) | | |
| Location: | Lincoln, Vt. | | |
| Job # | 167-15 | Date: | 6/19/2015 |

CAMP Precast Concrete Products, Inc.
78 Precast Road, Milton, VT 05468
Phone (802) 893-2401 Fax (802) 893-1542

**Product I.D.** DI 506 + 14 **Diameter:** 60"

Invert: No Ladders: No Coating: No Access Size: 24" x 48"

Cast Iron / Hatch: Neenah R-3587-4

| | | | | | | | | | |
|---|---|---|---|---|---|---|---|---|---|
| Rim: | 1001.26 | Cone: | | Riser#1: | | Riser#4: | | | |
| Inv. Out: | 996.58 | Cover: | 13" (special) | Riser#2: | | Riser#5: | | | |
| Diff: | 4.68 | Base: | 3' | Riser#3: | | Riser#6: | | | |
| Sump: | 0.50 | | | | | | | | |
| Gross V.F.: | 5.18 | Angle | | | | | | | |
| C.I. Height: | 0.67 | Boot: | | | | | | | |
| Net V.F.: | 4.51 | Dist. Up: | | | | | | | |
| Brick Space: | 0.43 | Pipe Type: | | | | | | | |
| Actual V.F. | 4.08 | Pipe Size: | | | | | | | |

**Quality Control**

**Prepour**
Form Cleaning: Form Release:
Rein. Steel: Std. Spec. Form Closure:
Block Out: Rein. Size:
Comments: Q.C. by/date:

**Postpour**
Finish: Bricking:
Invert: Ladders:
Coating: Boots:
Comments: Q.C. by/date:

Special Info. / Comments: **VT AOT Specs including 8" thick base**

Mold #: YDS³ Wt.

**PLAN / FLIPPED**

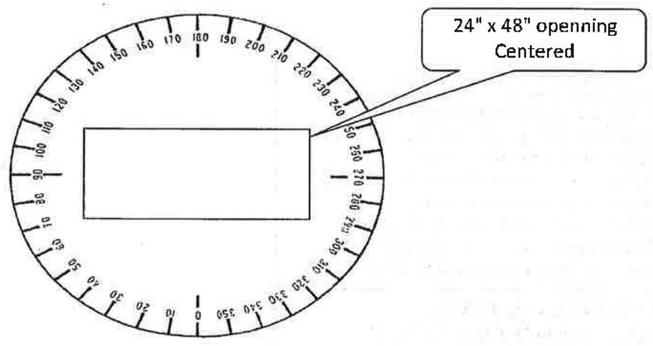


**COVER**

Vermont Agency of Transportation
RECEIVED
ON: June 23, 2015
and Checked for
CONFORMANCE
BY: Todd A. Sumner DATE: 06/24/2015

Vermont Agency of Transportation

RECEIVED

ON: June 23, 2015

and Checked for

CONFORMANCE

BY: Todd A. Sumner DATE: 06/24/2015

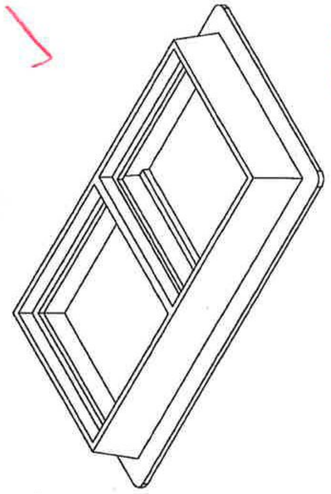

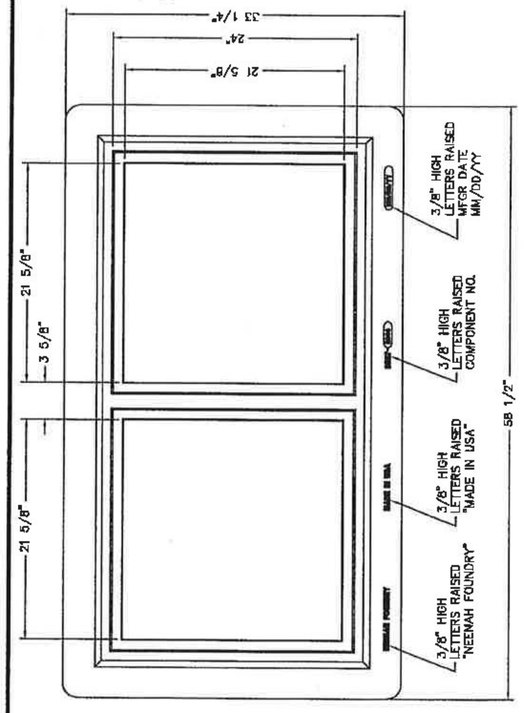


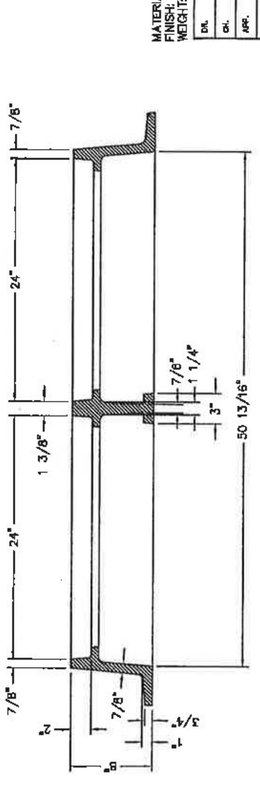


MATERIAL: CAST GRAY IRON ASTM A-48, CLASS 35B
FINISH: NO PAINT UNLESS SPECIFIED ON PURCHASE ORDER
WEIGHT: 516#

| | | | |
|---|---|---|---|
| DR. RKB | SCALE 1/8"=1" | TITLE R-3587 FRAME | NF-35872004 B |
| CH. | | | |
| APP. | DW. CHK. | NEENAH FOUNDRY COMPANY | |
| DATE 12-21-2010 | | | |
| www.neenahfoundry.com | | PHONE: 1-800-558-5075 | |

CAD DWG. REF: 3587/2004.DWG- 1

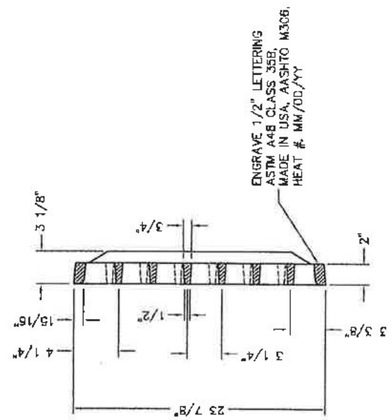


NOTE: ALL DIMENSIONS SHOWN ARE IN ENGLISH
MEETS AASHTO M306 40,000# PROOF LOAD REQUIREMENTS.
MATERIAL: CAST GRAY IRON ASTM A-48, CLASS 35B
FREE OPEN AREA: 1.6 SQ. FT.
FINISH: NO PAINT
WEIGHT: 153#

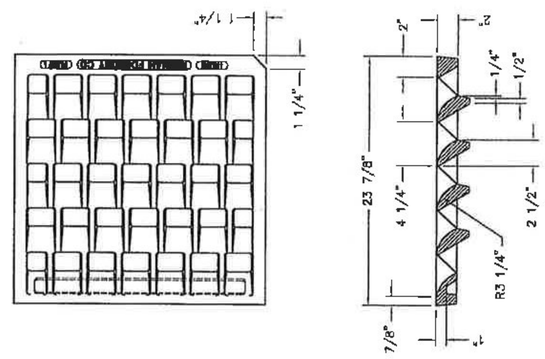


| | | | |
|---|---|---|---|
| DR. CSK | SCALE 1/8"=1" | TITLE R-3588-L TYPE "L" FLOW LEFT GRATE FOR NEW HAMPSHIRE TYPE "FL" | |
| CH. | | | |
| APP. | DWN CHK. | NEENAH FOUNDRY COMPANY NEENAH WISCONSIN 54956 | NF-35883010 B |
| DATE 01-10-1996 | | | |

CAD DWG. REF: 35883010.DWG- 3

Vermont Agency of Transportation
RECEIVED
ON: June 23, 2015
and Checked for
CONFORMANCE
BY: Todd A. Sumner DATE: 06/24/2015

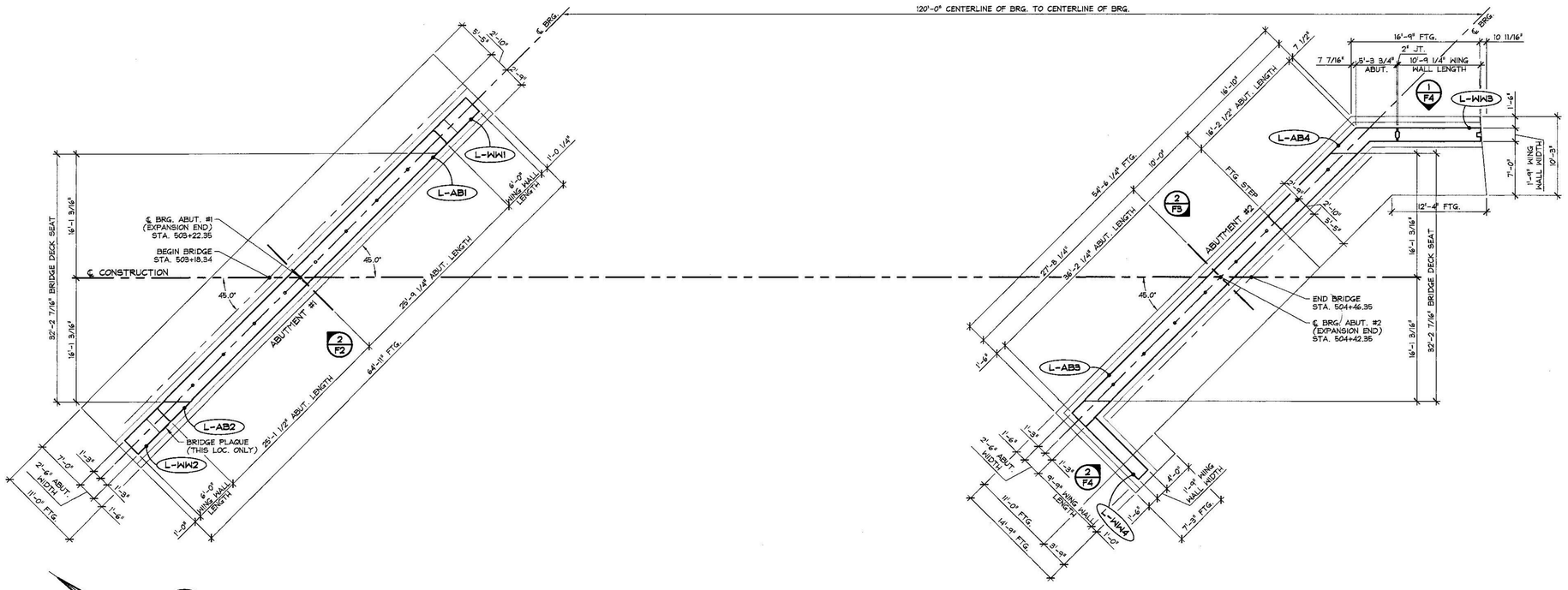


1 F1 PRECAST ABUTMENT & WING WALL LAYOUT

1/8" = 1'-0"

## ABUTMENT & WING WALL GENERAL NOTES

1. MIN. CONCRETE STRENGTH AT 28 DAYS SHALL BE 5,000 PSI.
2. MIN. CONCRETE STRENGTH AT STRESS TRANSFER SHALL BE 3,500 PSI (UNLESS NOTED OTHERWISE).
3. REINFORCING STEEL SHALL BE GR-60, ASTM A-615 (AASHTO M31) LEVEL I (EPOXY COATED) OR LEVEL I (BLACK STEEL) (AS NOTED ON SHOP DRAWINGS).
4. SEE INDIVIDUAL ABUTMENT DRAWINGS FOR CONCRETE FINISHES AND EXTENT OF WATERPROOF SEALER APPLICATION.
5. SEE INDIVIDUAL WING WALL DRAWINGS FOR CONCRETE FINISHES AND EXTENT OF WATERPROOF SEALER APPLICATION.
6. PRECAST CONCRETE UNITS SHALL BE HANDLED AND ERECTED USING THE LIFTING INSERTS ONLY. THE MINIMUM SLING ANGLE FROM THE HORIZONTAL SHALL BE 60°. NON-PRESTRESSED UNITS SHALL BE STORED & TRANSPORTED WITH TIMBER SUPPORTS AT 5th POINTS, UNLESS APPROVED BY J.P. CARRARA & SONS, INC.
7. MATERIAL SPECIFICATION AND MIX DESIGN SHALL CONFORM TO VERMONT SPEC. P510.02 AND P510.05 RESPECTIVELY.

   DESIGN MIX:

   WING WALLS: J.P.C. BRIDGE MIX #445MSCC

   ABUTMENTS: J.P.C. BRIDGE MIX #445MSCC
8. QUALITY CONTROL PROCEDURES ARE IN ACCORDANCE WITH PCI REQUIREMENTS. J.P. CARRARA & SONS, INC. IS A PCI CERTIFIED PLANT.
9. CURING METHOD: AS SOON AS THE TOP OF PRECAST CONCRETE UNITS ARE FINISHED, A COVER OF POLY WILL BE PLACED OVER THE UNIT. NATURAL CURE WITH NO EXTERNAL HEAT APPLIED.
10. ABUTMENT POST-TENSIONING SEQUENCE:
    A. ERECT PRECAST CONCRETE ABUTMENTS, AND POST-TENSION CENTER TENDON TO APPROXIMATELY 5,000 LBS.
    B. EPOXY SHEAR KEY (AS REQUIRED) (BY OTHERS).
    C. ONCE SHEAR KEY GROUT HAS ATTAINED A MINIMUM COMPRESSIVE STRENGTH OF 3,000 PSI; POST-TENSION TENDONS TO 32,000 LBS.

Vermont Agency of Transportation

RECEIVED

ON: May 12, 2015

and Checked for

CONFORMANCE

BY: Todd A. Sumner DATE: 05/13/2015

SUBMITTAL REVIEW

Review is only for general conformity to the contract drawings and specifications and shall not relieve the contractor of his entire responsibility under the contract, including among other things, dimensions to be confirmed and correlated at the job site, and information that pertains to the fabrication processes or to techniques of construction.

- ☑ NO EXCEPTIONS TAKEN
- ☐ MAKE CORRECTIONS NOTED
  RESUBMITTAL NOT REQUIRED
- ☐ AMEND AND RESUBMIT
- ☐ REJECTED - SEE REMARKS

PB AMERICAS, INC.

BY: Ray G. Hamm

DATE: 5/12/2015

⚠ 4-27-15 GENERAL REVISIONS

APPROVAL STAMP:

J.P. CARRARA & SONS INC.
Precast & Prestress Manufacturer
2464 CASE STR., MIDDLEBURY, VERMONT 05753 Phone:(802)388-6361 Fax:(802)388-9010

J.A. McDONALD, INC.
CONTRACTOR
LYNDON CENTER, VERMONT

STATE OF VERMONT AGENCY OF TRANSPORTATION
COUNTY OF ADDISON

DATE: FEB. 6, 2015

SCALE: NOTED

TOWN OF LINCOLN
TH 1 (RURAL MAJOR COLLECTOR) OVER NEW HAVEN RIVER
BRIDGE NO.: 19 PROJECT NO.: BRF 0188 (8)

CHKD: M.W. DFTM: B.L.

JOB NO: 23459-015

PRECAST ABUTMENT & WING WALL LAYOUT

DWG. NO: F1

F:\VT-Bridges\23459-15 Lincoln Bridge 19\23459-F1.dwg, 4/28/2015 1:54:02 PM

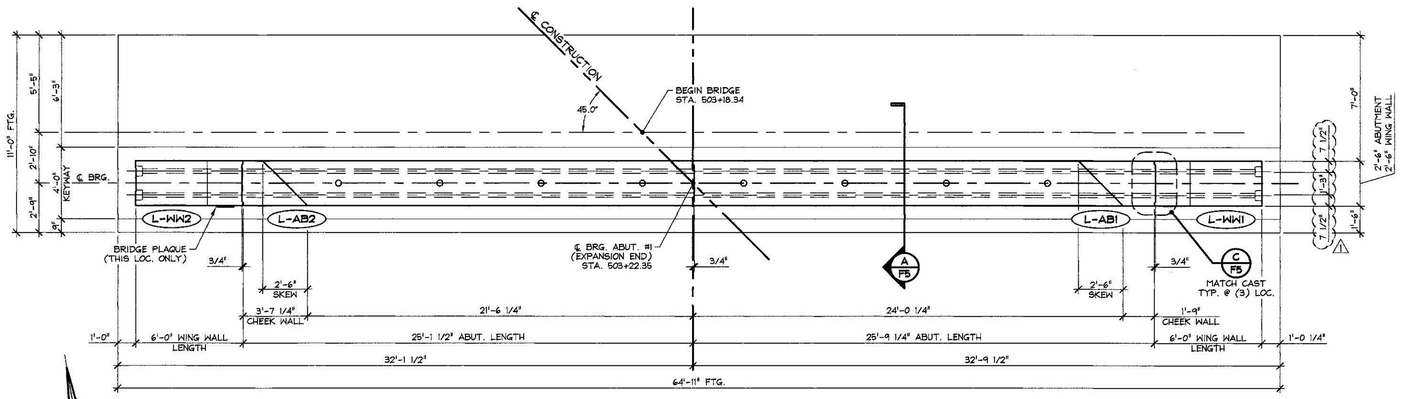


1 F2 PRECAST ABUTMENT #1 & WING WALL LAYOUT
1/4" = 1'-0"

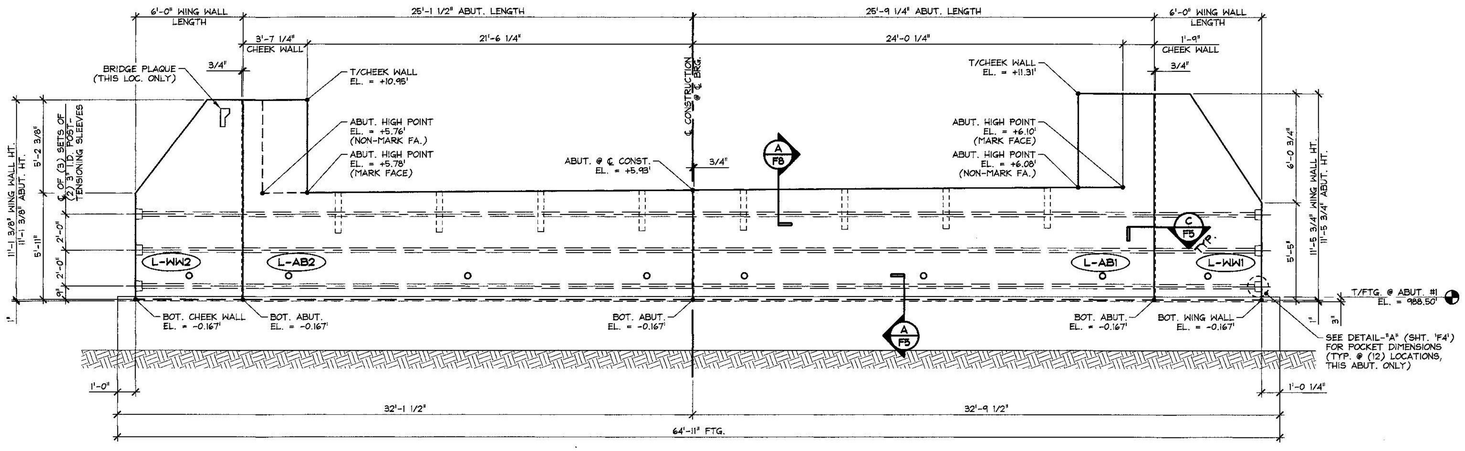


2 F2 PRECAST ABUTMENT #1 & WING WALL SOUTH ELEVATION
1/4" = 1'-0"

| POUR SCHEDULE | |
|---|---|
| POUR 1 | L-WW1 & L-WW2 |
| POUR 2 | L-AB1 |
| POUR 3 | L-AB2 |

Vermont Agency of Transportation
RECEIVED
ON: May 12, 2015
and Checked for
CONFORMANCE
BY: Todd A. Sumner DATE: 05/13/2015

SUBMITTAL REVIEW

Review is only for general conformity to the contract drawings and specifications and shall not relieve the contractor of his entire responsibility under the contract, including among other things, dimensions to be confirmed and correlated at the job site, and information that pertains to the fabrication processes or to techniques of construction.

- [x] NO EXCEPTIONS TAKEN
- [ ] MAKE CORRECTIONS NOTED RESUBMITTAL NOT REQUIRED
- [ ] AMEND AND RESUBMIT
- [ ] REJECTED - SEE REMARKS

PB AMERICAS, INC.
BY: Ravi L. Lamm
DATE: 5/12/2015

△1 4-27-15 REVISED AS NOTED

APPROVAL STAMP:

J.P. CARRARA & SONS INC.
Precast & Prestress Manufacturer
2464 CASE STR., MIDDLEBURY, VERMONT 05753 Phone:(802)388-6361 Fax:(802)388-9010

J.A. McDONALD, INC.
CONTRACTOR
LYNDON CENTER, VERMONT

STATE OF VERMONT AGENCY OF TRANSPORTATION
COUNTY OF ADDISON

TOWN OF LINCOLN
TH 1 (RURAL MAJOR COLLECTOR) OVER NEW HAVEN RIVER
BRIDGE NO.: 19 PROJECT NO.: BRF 0188 (8)

ABUTMENT #1
PLAN & ELEVATION

DATE: FEB. 6, 2015
SCALE: NOTED
CHKD: M.W. DFTM: B.L.
JOB NO: 23459-015
DWG. NO: F2

F:\VT-Bridges\23459-15 Lincoln Bridge 19\23459-F2.dwg, 4/28/2015 1:55:09 PM

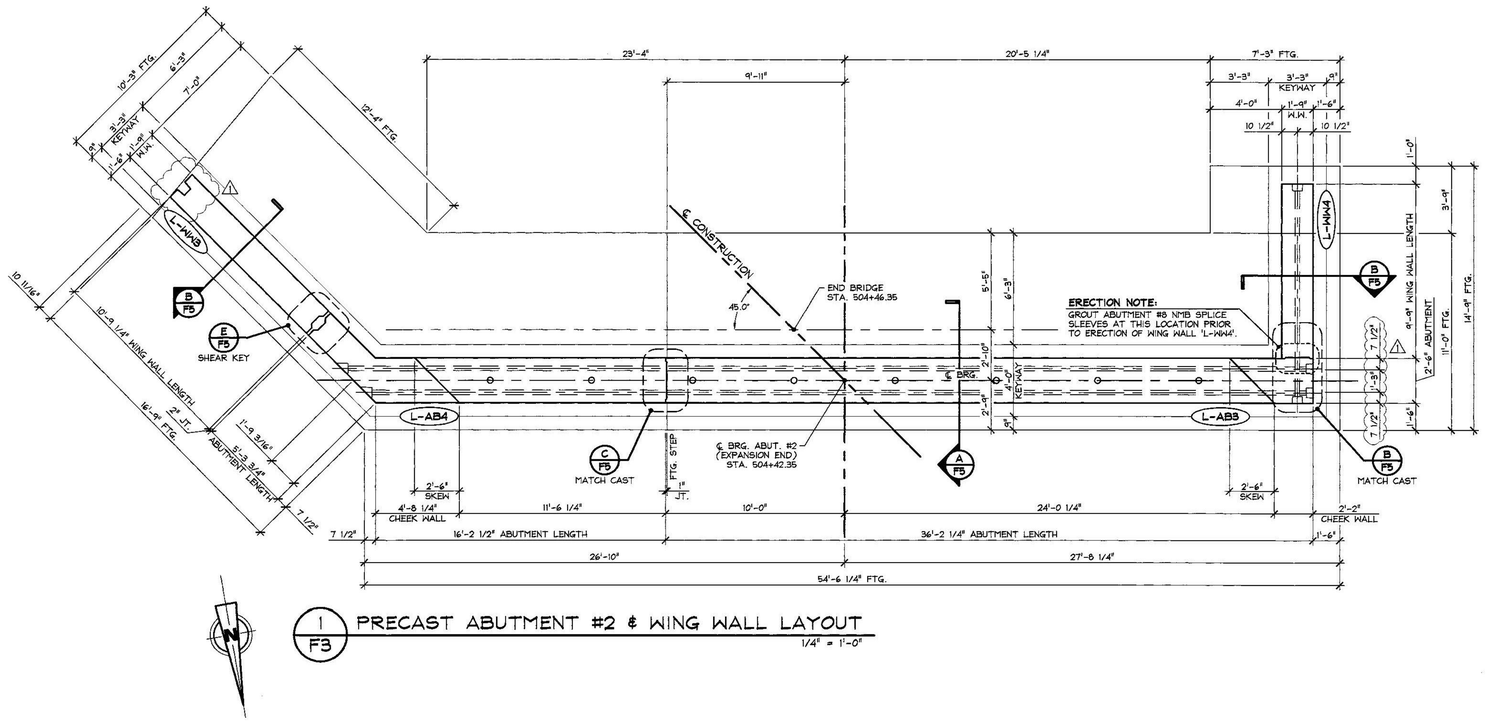


1 / F3 PRECAST ABUTMENT #2 & WING WALL LAYOUT

1/4" = 1'-0"

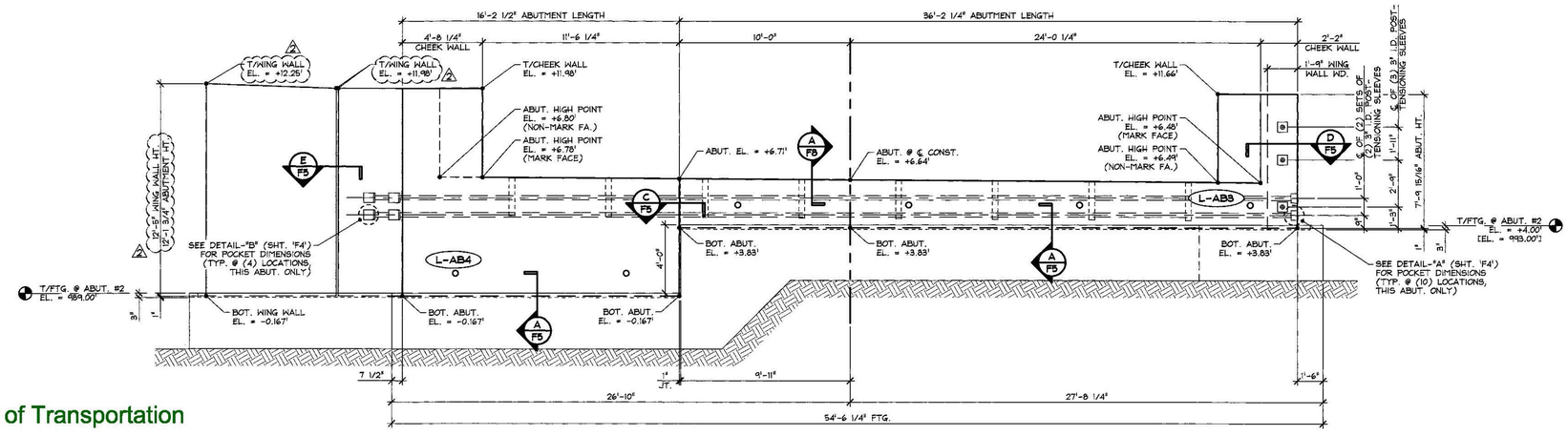


2 / F3 PRECAST ABUTMENT #2 & WING WALL NORTH ELEVATION

1/4" = 1'-0"

| POUR SCHEDULE | |
|---|---|
| POUR 6 | L-W4 & L-W3 |
| POUR 7 | L-AB3 |
| POUR 8 | L-AB4 |

Vermont Agency of Transportation

RECEIVED

ON: May 12, 2015

and Checked for

CONFORMANCE

BY: Todd A. Sumner DATE: 05/13/2015

SUBMITTAL REVIEW

Review is only for general conformity to the contract drawings and specifications and shall not relieve the contractor of his entire responsibility under the contract, including among other things, dimensions to be confirmed and correlated at the job site, and information that pertains to the fabrication processes or to techniques of construction.

- [x] NO EXCEPTIONS TAKEN
- [ ] MAKE CORRECTIONS NOTED RESUBMITTAL NOT REQUIRED
- [ ] AMEND AND RESUBMIT
- [ ] REJECTED - SEE REMARKS

PB AMERICAS, INC.

BY: Mary K. Bowers

DATE: 5/12/2015

2 5-11-15 REVISED AS NOTED

1 4-27-15 REVISED AS NOTED

APPROVAL STAMP:

J.P. CARRARA & SONS INC.
Precast & Prestress Manufacturer
2464 OSE STR., MIDDLEBURY, VERMONT 05753 Phone:(802)388-6361 Fax:(802)388-9010

J.A. McDONALD, INC.
CONTRACTOR
LYNDON CENTER, VERMONT

STATE OF VERMONT AGENCY OF TRANSPORTATION
COUNTY OF ADDISON

DATE: FEB. 6, 2015
SCALE: NOTED
CHKD: M.W. DFTM: B.L.
JOB NO: 23459-015

TOWN OF LINCOLN
TH 1 (RURAL MAJOR COLLECTOR) OVER NEW HAVEN RIVER
BRIDGE NO.: 19 PROJECT NO.: BRF 0188 (8)

ABUTMENT #2
PLAN & ELEVATIONS

DWG. NO: F3

F:\VT-Bridges\23459-15 Lincoln Bridge 19\23459-F3.dwg, 5/11/2015 12:50:26 PM

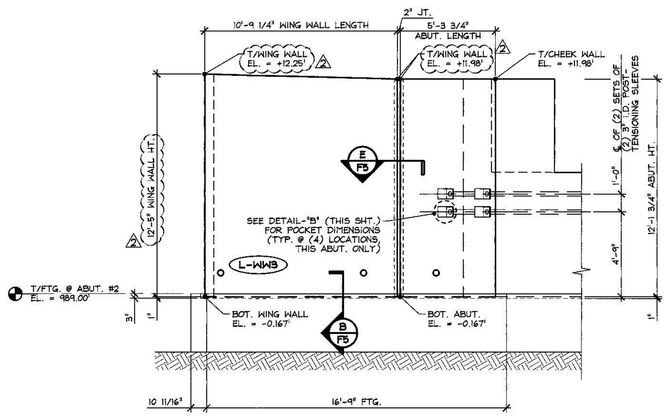


1 F4 WING WALL #3 EAST ELEVATION

1/4" = 1'-0"

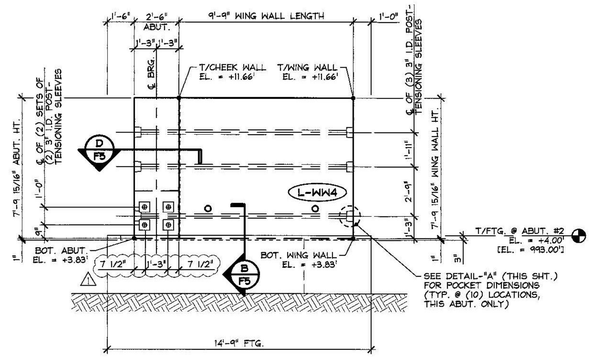


2 F4 WING WALL #4 WEST ELEVATION

1/4" = 1'-0"

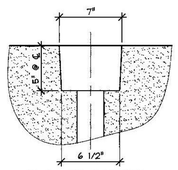


PLAN OF POCKET

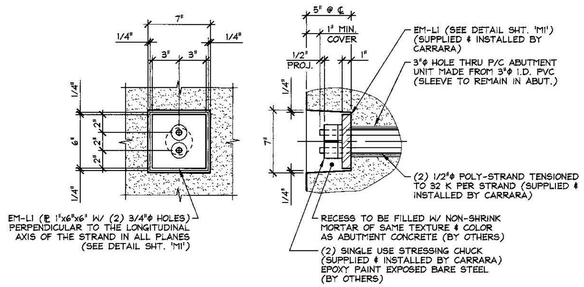


FASCIA ELEVATION SECTION AT CENTERLINE

DETAIL - "A"

1 1/2" = 1'-0"

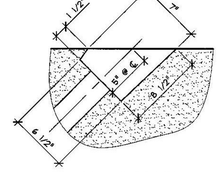


PLAN OF POCKET

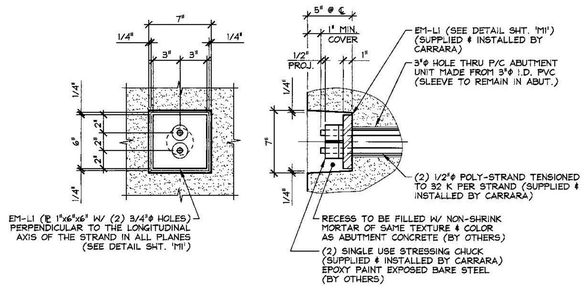


FASCIA ELEVATION SECTION AT CENTERLINE

DETAIL - "B"

1 1/2" = 1'-0"

SUBMITTAL REVIEW

Review is only for general conformity to the contract drawings and specifications and shall not relieve the contractor of his entire responsibility under the contract, including among other things, dimensions to be confirmed and correlated at the job site, and information that pertains to the fabrication processes or to techniques of construction.

- [x] NO EXCEPTIONS TAKEN
- [ ] MAKE CORRECTIONS NOTED RESUBMITTAL NOT REQUIRED
- [ ] AMEND AND RESUBMIT
- [ ] REJECTED - SEE REMARKS

PB AMERICAS, INC.
BY: Ray L. Belanger
DATE: 5/12/2015

Vermont Agency of Transportation

RECEIVED

ON: May 12, 2015

and Checked for

CONFORMANCE

BY: Todd A. Sumner DATE: 05/13/2015

5-11-15 REVISED AS NOTED

4-27-15 REVISED AS NOTED

APPROVAL STAMP:

J.P. CARRARA & SONS INC.
Precast & Prestress Manufacturer
2464 CASE STR., MIDDLEBURY, VERMONT 05753 Phone:(802)388-6361 Fax:(802)388-9010

J.A. McDONALD, INC.
CONTRACTOR
LYNDON CENTER, VERMONT

STATE OF VERMONT AGENCY OF TRANSPORTATION
COUNTY OF ADDISON

DATE: FEB. 6, 2015

SCALE: NOTED

TOWN OF LINCOLN
TH 1 (RURAL MAJOR COLLECTOR) OVER NEW HAVEN RIVER
BRIDGE NO.: 19 PROJECT NO.: BRF 0188 (8)

CHKD: M.W. DFTM: B.L.

JOB NO: 23459-015

WING WALL ELEVATIONS & POST-TENSIONING POCKET DETAILS

DWG. NO: F4

F:\VT-Bridges\23459-15 Lincoln Bridge 19\23459-F4.dwg, 5/11/2015 12:51:08 PM

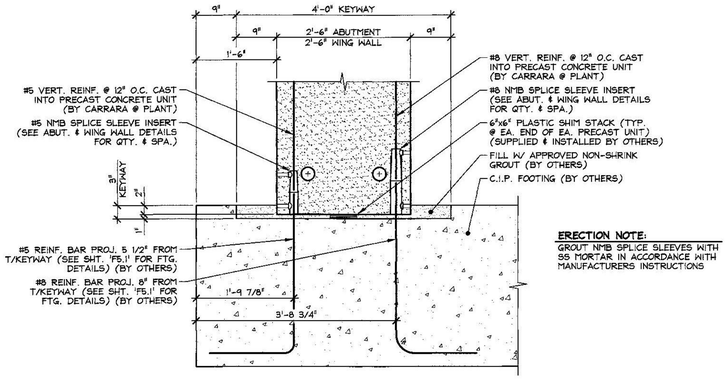


A F5 STEM JOINT SECTION
3/4" = 1'-0"

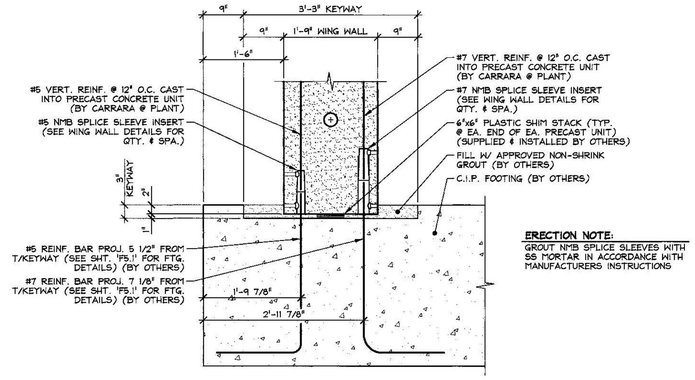


B F5 STEM JOINT SECTION
3/4" = 1'-0"

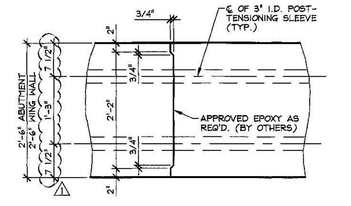


C F5 MATCH CAST SECTION @ P.T. SLEEVE
3/4" = 1'-0"

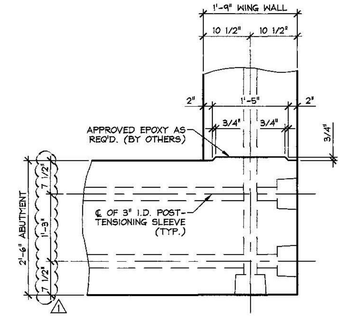


D F5 MATCH CAST SECTION @ P.T. SLEEVE
3/4" = 1'-0"

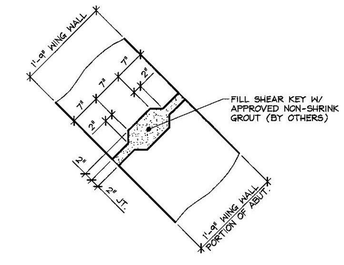


E F5 SHEAR KEY SECTION @ WING WALL
3/4" = 1'-0"

SUBMITTAL REVIEW

Review is only for general conformity to the contract drawings and specifications and shall not relieve the contractor of his entire responsibility under the contract, including among other things, dimensions to be confirmed and correlated at the job site, and information that pertains to the fabrication processes or to techniques of construction.

- [x] NO EXCEPTIONS TAKEN
- [ ] MAKE CORRECTIONS NOTED RESUBMITTAL NOT REQUIRED
- [ ] AMEND AND RESUBMIT
- [ ] REJECTED - SEE REMARKS

PB AMERICAS, INC.
BY: Ray K. Sumner
DATE: 5/12/2015

Vermont Agency of Transportation

RECEIVED
ON: May 12, 2015
and Checked for
CONFORMANCE
BY: Todd A. Sumner DATE: 05/13/2015

△ 4-27-15 REVISED AS NOTED

APPROVAL STAMP:

J.P. CARRARA & SONS INC.
Precast & Prestress Manufacturer
2464 CASE STR., MIDDLEBURY, VERMONT 05753 Phone:(802)388-6361 Fax:(802)388-9010

J.A. McDONALD, INC.
CONTRACTOR
LYNDON CENTER, VERMONT

STATE OF VERMONT AGENCY OF TRANSPORTATION
COUNTY OF ADDISON

DATE: FEB. 6, 2015
SCALE: NOTED
CHKD: M.W. DFTM: B.L.
JOB NO: 23459-015

TOWN OF LINCOLN
TH 1 (RURAL MAJOR COLLECTOR) OVER NEW HAVEN RIVER
BRIDGE NO.: 19 PROJECT NO.: BRF 0188 (8)

ABUTMENT DETAILS

DWG. NO: F5

F:\VT-Bridges\23459-15 Lincoln Bridge 19\23459-F5.dwg, 4/28/2015 2:16:27 PM

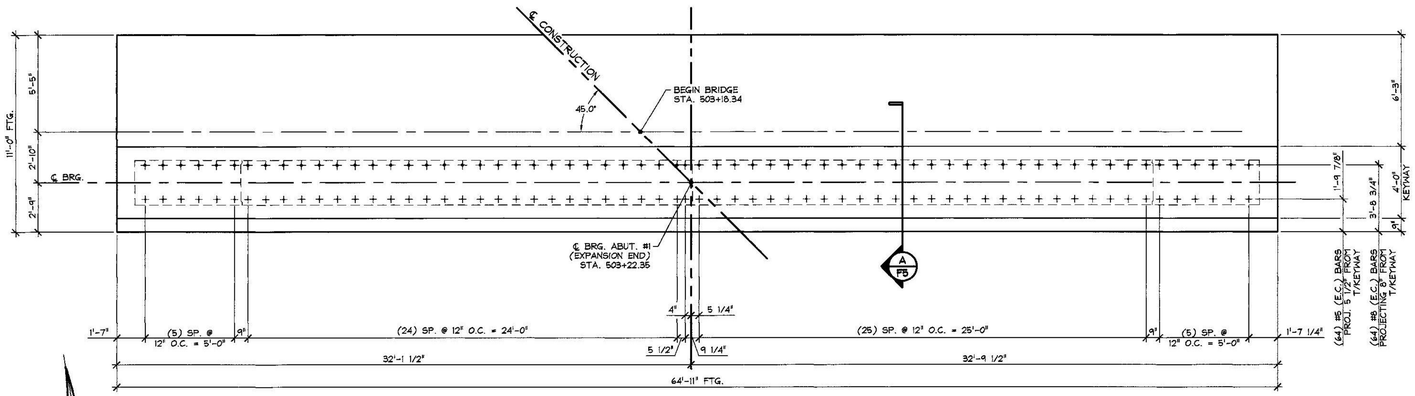


1 / F5.1 ABUTMENT #1 STEM JOINT PROJECTING BAR LAYOUT
1/4" = 1'-0"

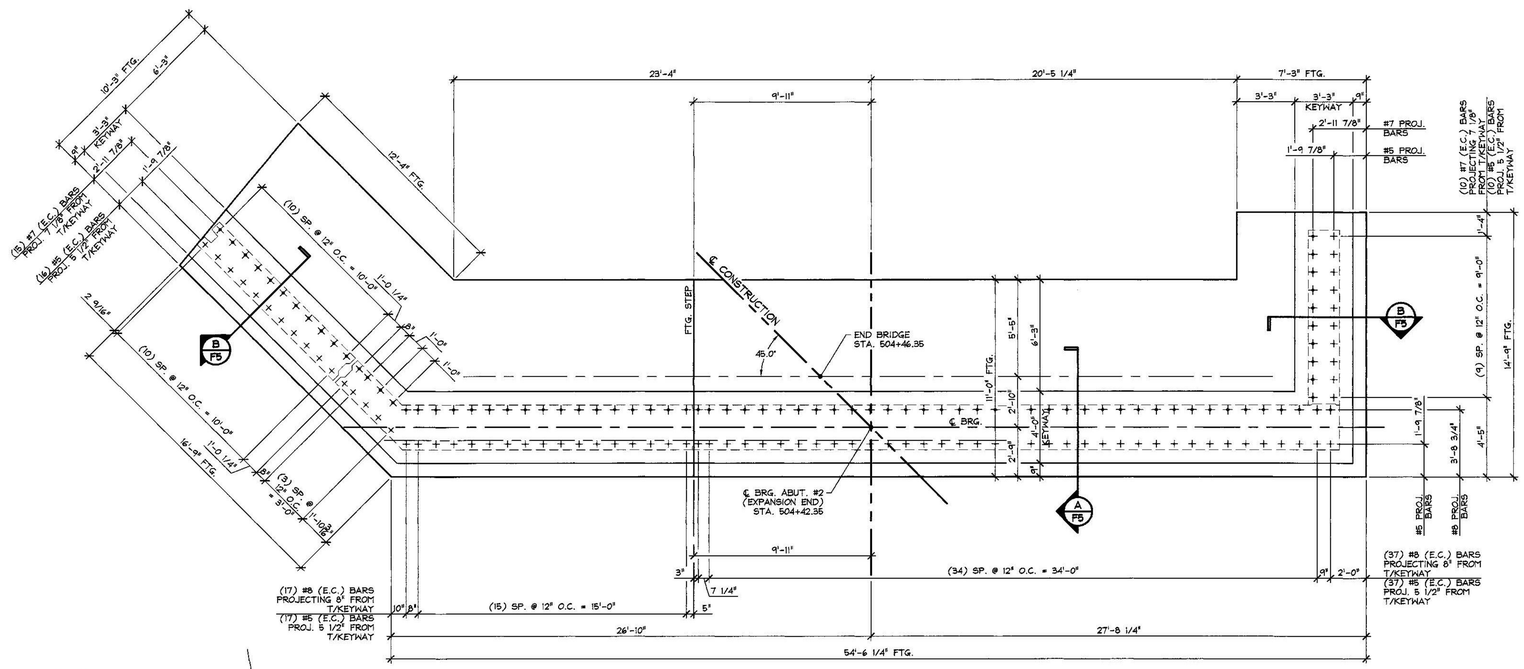


2 / F5.1 ABUTMENT #2 STEM JOINT PROJECTING BAR LAYOUT
1/4" = 1'-0"

SUBMITTAL REVIEW

Review is only for general conformity to the contract drawings and specifications and shall not relieve the contractor of his entire responsibility under the contract, including among other things, dimensions to be confirmed and correlated at the job site, and information that pertains to the fabrication processes or to techniques of construction.

- [x] NO EXCEPTIONS TAKEN
- [ ] MAKE CORRECTIONS NOTED RESUBMITTAL NOT REQUIRED
- [ ] AMEND AND RESUBMIT
- [ ] REJECTED - SEE REMARKS

PB AMERICAS, INC.
BY: [signature]
DATE: 5/12/2015

Vermont Agency of Transportation
RECEIVED
ON: May 12, 2015
and Checked for
CONFORMANCE
BY: Todd A. Sumner DATE: 05/13/2015

△1 4-27-15 GENERAL REVISIONS

APPROVAL STAMP:

J.P. CARRARA & SONS INC.
Precast & Prestress Manufacturer
2464 CASE STR., MIDDLEBURY, VERMONT 05753 Phone:(802)388-6361 Fax:(802)388-9010

J.A. McDONALD, INC.
CONTRACTOR
LYNDON CENTER, VERMONT

STATE OF VERMONT AGENCY OF TRANSPORTATION
COUNTY OF ADDISON

TOWN OF LINCOLN
TH 1 (RURAL MAJOR COLLECTOR) OVER NEW HAVEN RIVER
BRIDGE NO.: 19 PROJECT NO.: BRF 0188 (8)

STEM JOINT
PROJECTING BAR LAYOUTS

DATE: FEB. 6, 2015
SCALE: NOTED
CHKD: M.W. DFTM: B.L.
JOB NO: 23459-015
DWG. NO: F5.1

F:\VT-Bridges\23459-15 Lincoln Bridge 19\23459-F5-1.dwg, 4/28/2015 2:17:12 PM

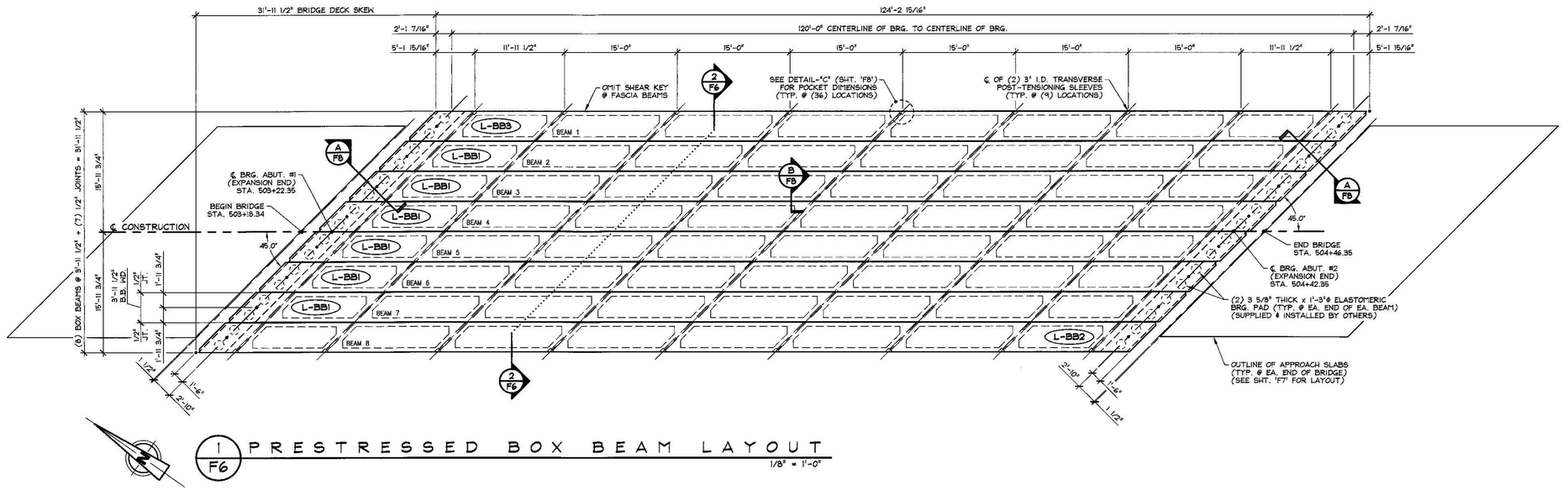


1/F6 PRESTRESSED BOX BEAM LAYOUT

1/8" = 1'-0"

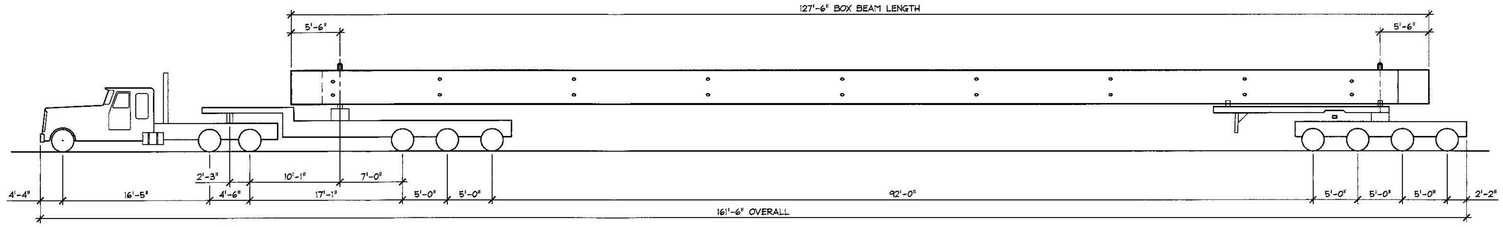


SHIPPING DETAIL

N.T.S.

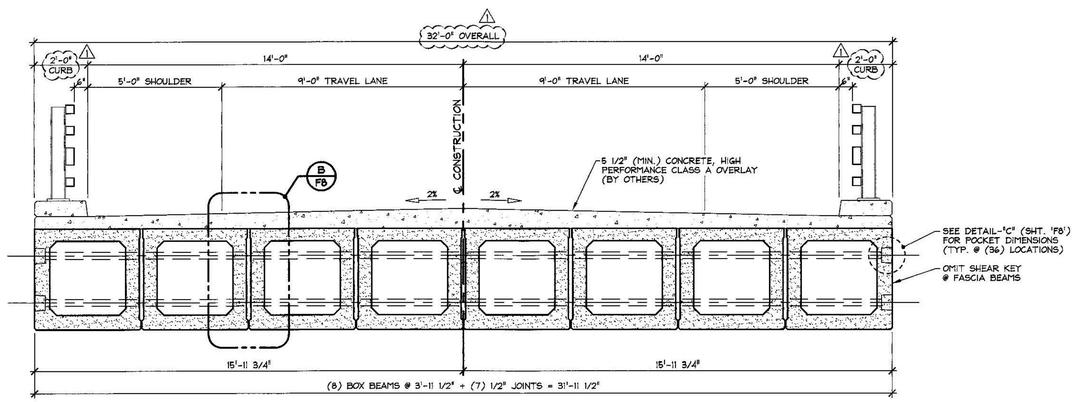


2/F6 TRANSVERSE BOX BEAM SECTION

3/8" = 1'-0"

## BOX BEAM GENERAL NOTES

1. MIN. CONCRETE STRENGTH AT 28 DAYS SHALL BE 8,000 PSI.
2. MIN. CONCRETE STRENGTH AT STRESS TRANSFER SHALL BE 6,000 PSI.
3. REINFORCING STEEL SHALL BE GR-60, ASTM A-615 (AASHTO M31) LEVEL II (DUAL COATED).
4. PRESTRESSING STRANDS SHALL CONFORM TO ASTM A-416 (AASHTO M203) AND SHALL CONSIST OF 0.60"ø x 270 KSI 7-WIRE LOW RELAXATION STRANDS.
5. PRESTRESSING STRANDS SHALL EACH BE PULLED TO HAVE A NET TENSION OF **44.0** K AFTER ACCOUNTING FOR CHUCK SLIPPAGE. TENSION SHALL BE VERIFIED BY MEASURING STRAND ELONGATION. (SEE EXAMPLE ELONGATION CALCULATION AND TENSIONING PROCEDURE, THIS SHEET.)
6. ENDS OF PRESTRESSING STRANDS SHALL BE CUT FLUSH WITH END OF BOX BEAM (UNLESS NOTED OTHERWISE) AND EPOXY PAINTED.
7. ALL EXPOSED CORNERS SHALL BE CHAMFERED 3/4" (UNLESS NOTED OTHERWISE).
8. THE TOP OF BEAMS SHALL RECEIVE A TRANSVERSE RAKE FINISH ROUGHENED TO 1/4" AMPLITUDE (UNLESS NOTED OTHERWISE).
9. SHEAR KEY SURFACES SHALL BE SAND BLASTED CLEAN.
10. BEAMS SHALL BE HANDLED AND ERECTED USING THE LIFTING LOOPS ONLY. RIGGING SHALL BE CONFIGURED SUCH THAT EQUAL AND VERTICAL FORCES ARE APPLIED TO EACH OF THE TWO LIFTING LOOPS AT EACH END OF THE SLAB. **THE PINS OF THE SHACKLES SHALL BE PLACED THROUGH THE LIFTING LOOPS. SEE DETAIL, SHEET 'F8'.** BEAMS SHALL BE STORED AND TRANSPORTED WITH TIMBER SUPPORTS WITHIN 2'-0" OF THE BEAM ENDS, SET PERPENDICULAR TO BEAM SPAN, UNLESS APPROVED BY J.P. CARRARA & SONS, INC.

    ONCE BOX BEAMS HAVE BEEN ERECTED, CUT LIFTING LOOPS AT RECESS, EPOXY PAINT AND PATCH AS REQUIRED (BY OTHERS).
11. MATERIAL SPECIFICATION AND MIX DESIGN SHALL CONFORM TO VERMONT SPEC. P510.02 AND P510.05 RESPECTIVELY.

    DESIGN MIX: J.P.C. BRIDGE MIX #4261M (NO DCI)
12. QUALITY CONTROL PROCEDURES ARE IN ACCORDANCE WITH PCI REQUIREMENTS. J.P. CARRARA & SONS, INC. IS A PCI CERTIFIED PLANT.
13. CURING METHOD: AS SOON AS THE TOP OF BEAM IS FINISHED, COVER WITH INSULATED POLY. THE DESIRED CURING TEMPERATURE RANGE SHALL NOT DROP BELOW 70°F. THE TEMPERATURE SHALL BE RECORDED BY AUTOMATIC SENSOR INSTRUMENTS ON GRAPH CHARTS, SPACED NOT MORE THAN 100' APART AND WILL CONTINUE UNTIL RELEASE STRENGTH IS ACHIEVED. EACH CHART SHALL BE MARKED WITH THE CASTING DATED AND LOCATION OF THE RECORDER. IF NECESSARY TO MAINTAIN CASTING BED TEMPERATURE PRIOR TO CONCRETE PLACEMENT OR TO ACCELERATE EARLY AGE STRENGTH GAIN, EXTERNAL RADIANT HEAT MAY BE EMPLOYED VIA HOT WATER DUCTS BENEATH AND WITHIN THE PERIPHERY OF THE CASTING BED. MAXIMUM CURING TEMPERATURE SHALL NOT EXCEED PCI SPECIFIED LIMITS.
14. TRANSVERSE POST-TENSIONING SEQUENCE:
    A. ERECT BOX BEAMS, AND POST-TENSION TENDONS TO APPROXIMATELY 5,000 LBS.
    B. GROUT SHEAR KEYS.
    C. ONCE SHEAR KEY GROUT HAS ATTAINED A MINIMUM COMPRESSIVE STRENGTH OF 1,500 PSI; POST TENSION TENDONS TO 47,000 LBS.
15. OWNER SHALL PROVIDE APPROPRIATE WATERPROOFING TO GROUTED AND/OR EPOXIED SHEAR KEYS. J.P. CARRARA & SONS, INC. SHALL NOT BE HELD LIABLE FOR PROBLEMS ASSOCIATED WITH MOISTURE INFILTRATING GROUTED AND/OR EPOXIED SHEAR KEYS.

## EXAMPLE PRESTRESSING STRAND ELONGATION CALC. AND TENSIONING

(NOT TO BE USED FOR CONSTRUCTION)

SIZE & GRADE: 0.60"ø x 270 KSI
AREA: 0.217 IN^2
TENSION: 44,000 LB. EACH STRAND
GRIP-TO-GRIP: 252'-0" = 252.00'
Es = 28,600,000 PSI (ASSUMED FOR THESE CALCULATIONS; VALUE TO BE OBTAINED FOR STRAND SPOOL ACTUALLY USED)

EXAMPLE:

$$\Delta = \frac{PL}{AE} = \frac{(44{,}000 - 3{,}000) \times 252.00 \times 12}{0.217 \times 28{,}600{,}000} = 19.977"$$

THEREFORE: (TOLERANCES ± 5%)
△ UPPER LIMIT = 1.05 x 19.977" = 20.98" = 21"
△ LOWER LIMIT = 0.95 x 19.977" = 18.98" = 19"

EXTRA FORCE REQUIRED TO COMPENSATE FOR 1/2" CHUCK SLIPPAGE:

$$\Delta P = \frac{0.5 \times 41{,}000}{19.977} = 1{,}026 \text{ LBS.}$$

TOTAL TENSIONING FORCE = 44,000 + 1,026 = 45,026 LBS.

## STRAND TENSIONING PROCEDURE:

1. PULL EACH STRAND INITIALLY TO 3,000# LBS. AND MARK STRAND.
2. THEN PULL EACH STRAND TO A TOTAL TENSION OF 45,026# LBS. AND MEASURE ELONGATION AFTER SEATING. IT MUST BE BETWEEN 19"± AND 21"±.

    # NOTE: FORCES READ ON STRESSING JACK GAUGES MUST BE MADE TO CORRESPOND TO ABOVE VALUES BASED ON CALIBRATION DATA FOR SPECIFIC JACK USED.

DESIGN LIVE LOAD: HL-93

Vermont Agency of Transportation

RECEIVED
ON: May 12, 2015
and Checked for
CONFORMANCE
BY: Todd A. Sumner DATE: 05/13/2015

SUBMITTAL REVIEW

Review is only for general conformity to the contract drawings and specifications and shall not relieve the contractor of his entire responsibility under the contract, including among other things, dimensions to be confirmed and correlated at the job site, and information that pertains to the fabrication processes or to techniques of construction.

- [x] NO EXCEPTIONS TAKEN
- [ ] MAKE CORRECTIONS NOTED
- [ ] RESUBMITTAL NOT REQUIRED
- [ ] AMEND AND RESUBMIT
- [ ] REJECTED - SEE REMARKS

BY: PB AMERICAS, INC.
DATE: 5/12/2015

△2 5-11-15 REVISED AS NOTED
△1 4-27-15 REVISED AS NOTED

APPROVAL STAMP:

J.P. CARRARA & SONS INC.
Precast & Prestress Manufacturer
2484 CASE STR, MIDDLEBURY, VERMONT 05753 Phone:(802)388-6361 Fax:(802)388-9010

J.A. McDONALD, INC.
CONTRACTOR
LYNDON CENTER, VERMONT

STATE OF VERMONT AGENCY OF TRANSPORTATION
COUNTY OF ADDISON

TOWN OF LINCOLN
TH 1 (RURAL MAJOR COLLECTOR) OVER NEW HAVEN RIVER
BRIDGE NO.: 19 PROJECT NO.: BRF 0188 (8)

PRESTRESSED BOX BEAM LAYOUT & SECTION

DATE: FEB. 6, 2015
SCALE: NOTED
CHKD: M.W. DFTM: B.L.
JOB NO: 23459-015
DWG. NO: F6

F:\VT-Bridges\23459-15 Lincoln Bridge 19\23459-F6.dwg, 5/11/2015 12:52:04 PM

## APPROACH SLAB GENERAL NOTES

1. MIN. CONCRETE STRENGTH AT 28 DAYS SHALL BE 5,000 PSI.
2. MIN. CONCRETE STRENGTH AT STRESS TRANSFER SHALL BE 3,500 PSI (UNLESS NOTED OTHERWISE).
3. REINFORCING STEEL SHALL BE GR-60, ASTM A-615 (AASHTO M31) LEVEL II (DUAL COATED) (AS NOTED ON SHOP DRAWINGS).
4. THE TOP OF APPROACH SLABS SHALL RECEIVE A SMOOTH FLOAT FINISH (UNLESS NOTED OTHERWISE).
5. SHEAR KEY SURFACES SHALL BE POWER WASHED WITH WATER PRIOR TO PLACEMENT.
6. PRECAST CONCRETE UNITS SHALL BE HANDLED AND ERECTED USING THE LIFTING INSERTS ONLY. THE MINIMUM SLING ANGLE FROM THE HORIZONTAL SHALL BE 60°. NON-PRESTRESSED UNITS SHALL BE STORED & TRANSPORTED WITH TIMBER SUPPORTS AT 5th POINTS, UNLESS APPROVED BY J.P. CARRARA & SONS, INC.
7. MATERIAL SPECIFICATION AND MIX DESIGN SHALL CONFORM TO VERMONT SPEC. P510.02 AND P510.05 RESPECTIVELY.
   DESIGN MIX: J.P.C. BRIDGE MIX #445M9GC
8. QUALITY CONTROL PROCEDURES ARE IN ACCORDANCE WITH PCI REQUIREMENTS. J.P. CARRARA & SONS, INC. IS A PCI CERTIFIED PLANT.
9. CURING METHOD: AS SOON AS THE TOP OF PRECAST CONCRETE UNITS ARE FINISHED, A COVER OF RIGID INSULATION AND POLY MILL BE PLACED OVER THE UNIT. NATURAL CURE WITH NO EXTERNAL HEAT APPLIED.

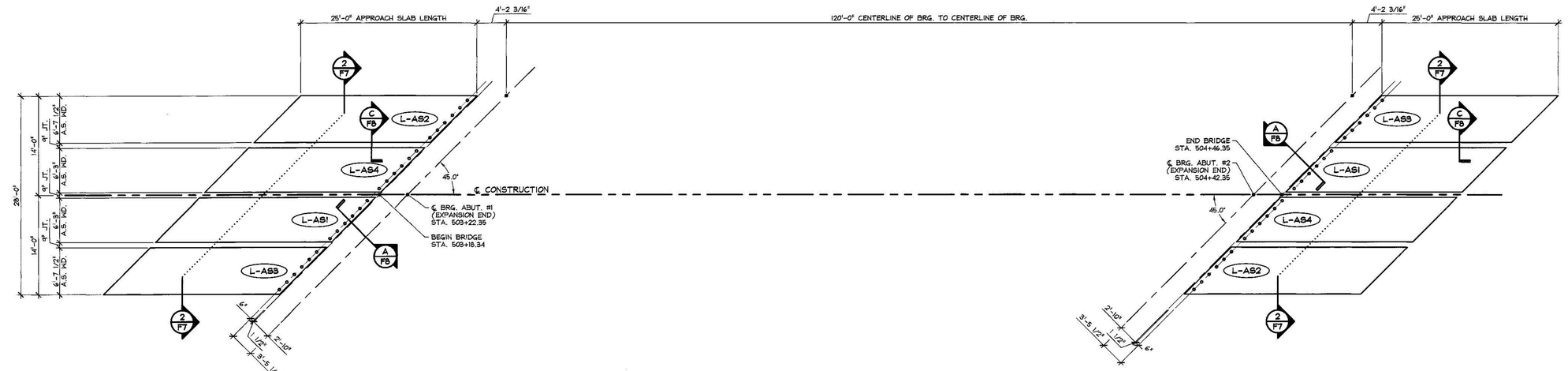


1/F7 PRECAST APPROACH SLAB LAYOUT
1/8" = 1'-0"

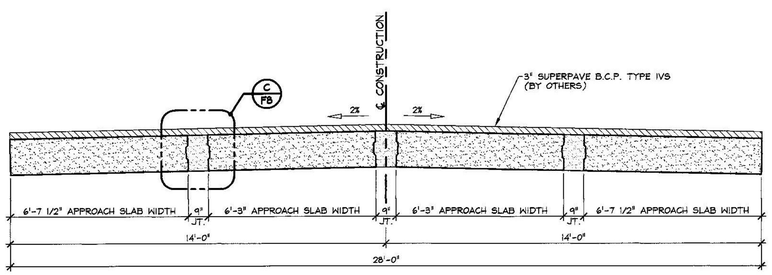


2/F7 TRANSVERSE APPROACH SLAB SECTION
3/8" = 1'-0"

SUBMITTAL REVIEW

Review is only for general conformity to the contract drawings and specifications and shall not relieve the contractor of his entire responsibility under the contract, including among other things, dimensions to be confirmed and correlated at the job site, and information that pertains to the fabrication processes or to techniques of construction.

- [x] NO EXCEPTIONS TAKEN
- [ ] MAKE CORRECTIONS NOTED RESUBMITTAL NOT REQUIRED
- [ ] AMEND AND RESUBMIT
- [ ] REJECTED - SEE REMARKS

PB AMERICAS, INC.
BY: Ray L. Paus
DATE: 5/12/2015

Vermont Agency of Transportation
RECEIVED
ON: May 12, 2015
and Checked for
CONFORMANCE
BY: Todd A. Sumner DATE: 05/13/2015

⚠ 4-27-15 REVISED AS NOTED

APPROVAL STAMP:

J.P. CARRARA & SONS INC.
Precast & Prestress Manufacturer
2464 CASE STR., MIDDLEBURY, VERMONT 05753 Phone:(802)388-6361 Fax:(802)388-9010

J.A. McDONALD, INC.
CONTRACTOR
LYNDON CENTER, VERMONT

STATE OF VERMONT AGENCY OF TRANSPORTATION
COUNTY OF ADDISON

DATE: FEB. 6, 2015
SCALE: NOTED

TOWN OF LINCOLN
TH 1 (RURAL MAJOR COLLECTOR) OVER NEW HAVEN RIVER
BRIDGE NO.: 19 PROJECT NO.: BRF 0188 (8)

CHKD: M.W. DFTM: B.L.
JOB NO: 23459-015

PRECAST APPROACH SLAB LAYOUT & SECTION

DWG. NO: F7

F:\VT-Bridges\23459-15 Lincoln Bridge 19\23459-F7.dwg, 4/28/2015 2:25:03 PM

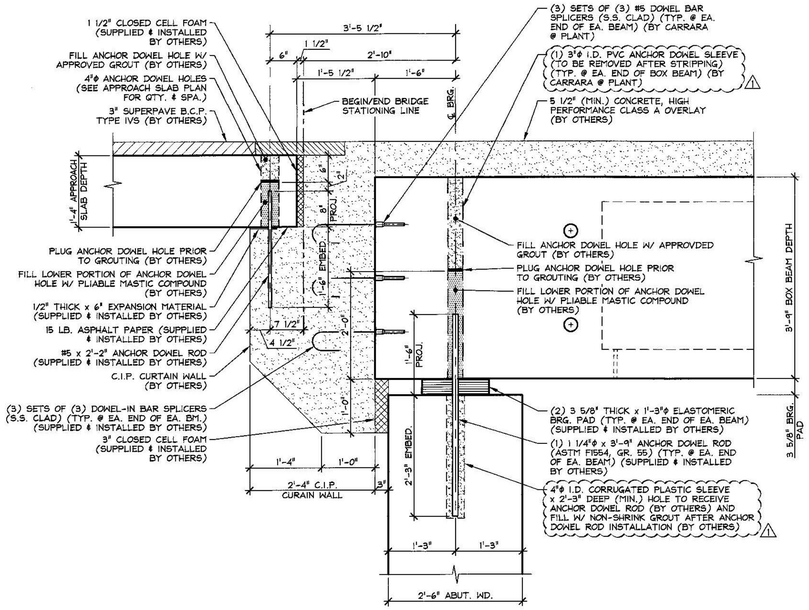


A F8 BEARING SECTION
3/4" = 1'-0"

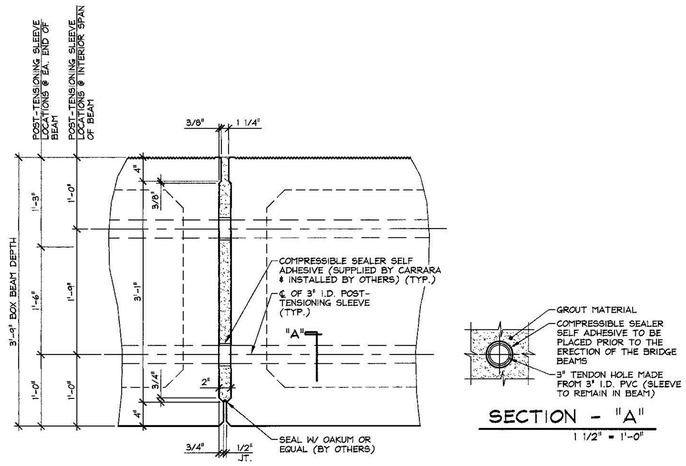





SECTION - "A"
1 1/2" = 1'-0"

B F8 SHEAR KEY SECTION @ P.T. SLEEVE
1" = 1'-0"

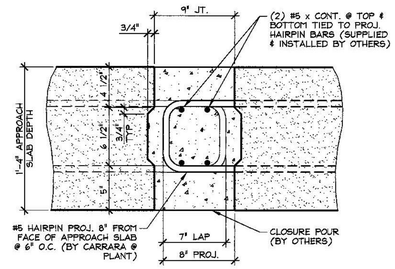


C F8 SHEAR KEY SECTION @ APPROACH SLABS
1 1/2" = 1'-0"

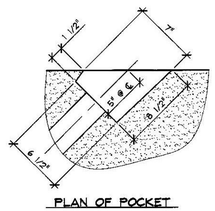


PLAN OF POCKET

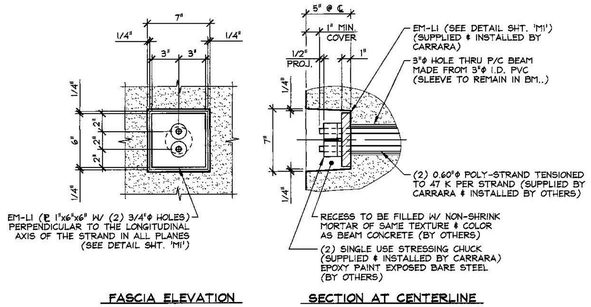


FASCIA ELEVATION — SECTION AT CENTERLINE

DETAIL - "C"
1 1/2" = 1'-0"

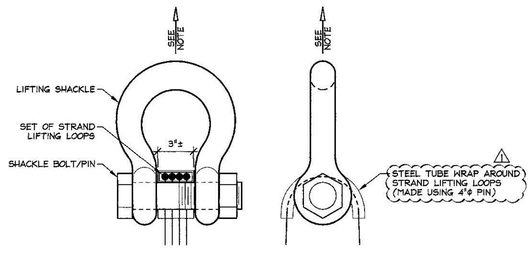


NOTE: BEAMS SHALL BE HANDLED AND ERECTED USING THE LIFTING LOOPS ONLY. RIGGING SHALL BE CONFIGURED SUCH THAT EQUAL FORCES ARE APPLIED TO EACH SET OF LIFTING LOOPS AT EACH END OF THE SLAB. SHACKLE BOLT/PIN SHALL BE PLACED UNDER LIFT LOOPS AS SHOWN. DESIGN AND CONFIGURATION OF RIGGING BY PURCHASER.

LIFTING SHACKLE DETAILS
N.T.S.

Vermont Agency of Transportation
2015-05-13 Lincoln BRF 0188(8) Precast_O_approved.pdf
RECEIVED
ON: May 12, 2015
and Checked for
CONFORMANCE
BY: Todd A. Sumner DATE: 05/13/2015

SUBMITTAL REVIEW

Review is only for general conformity to the contract drawings and specifications and shall not relieve the contractor of his entire responsibility under the contract, including among other things, dimensions to be confirmed and correlated at the job site, and information that pertains to the fabrication processes or to techniques of construction.

- ☑ NO EXCEPTIONS TAKEN
- ☐ MAKE CORRECTIONS NOTED RESUBMITTAL NOT REQUIRED
- ☐ AMEND AND RESUBMIT
- ☐ REJECTED - SEE REMARKS

PB AMERICAS, INC.
BY: Ram Gupta
DATE: 5/12/2015

⚠ 4-27-15 REVISED AS NOTED

APPROVAL STAMP:

J.P. CARRARA & SONS INC.
Precast & Prestress Manufacturer
2494 ORE STR., MIDDLEBURY, VERMONT 05753 Phone:(802)388-6361 Fax:(802)388-9010

J.A. McDONALD, INC.
CONTRACTOR
LYNDON CENTER, VERMONT

STATE OF VERMONT AGENCY OF TRANSPORTATION
COUNTY OF ADDISON

DATE: FEB. 6, 2015
SCALE: NOTED

TOWN OF LINCOLN
TH 1 (RURAL MAJOR COLLECTOR) OVER NEW HAVEN RIVER
BRIDGE NO.: 19 PROJECT NO.: BRF 0188 (8)

CHKD: M.W. DFTM: B.L.
JOB NO: 23459-015

PRESTRESSED BOX BEAM SECTIONS & DETAILS

DWG. NO: F8

F:\VT-Bridges\23459-15 Lincoln Bridge 19\23459-F8.dwg, 4/28/2015 2:26:48 PM

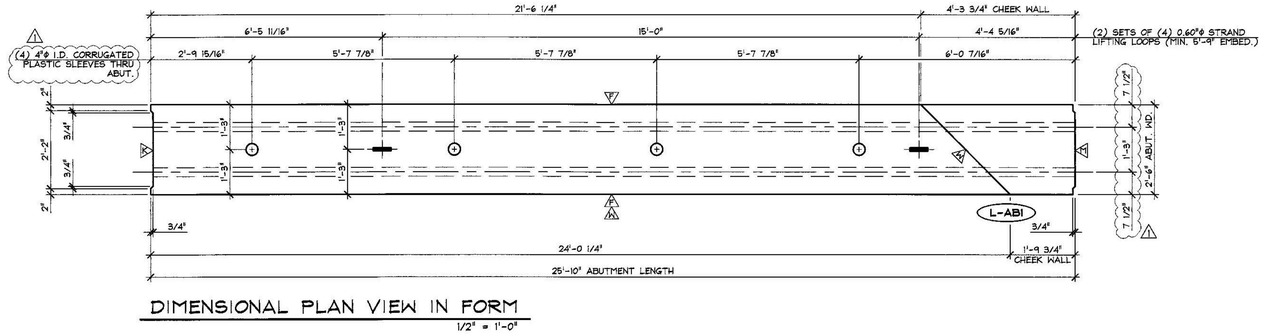


DIMENSIONAL PLAN VIEW IN FORM

1/2" = 1'-0"

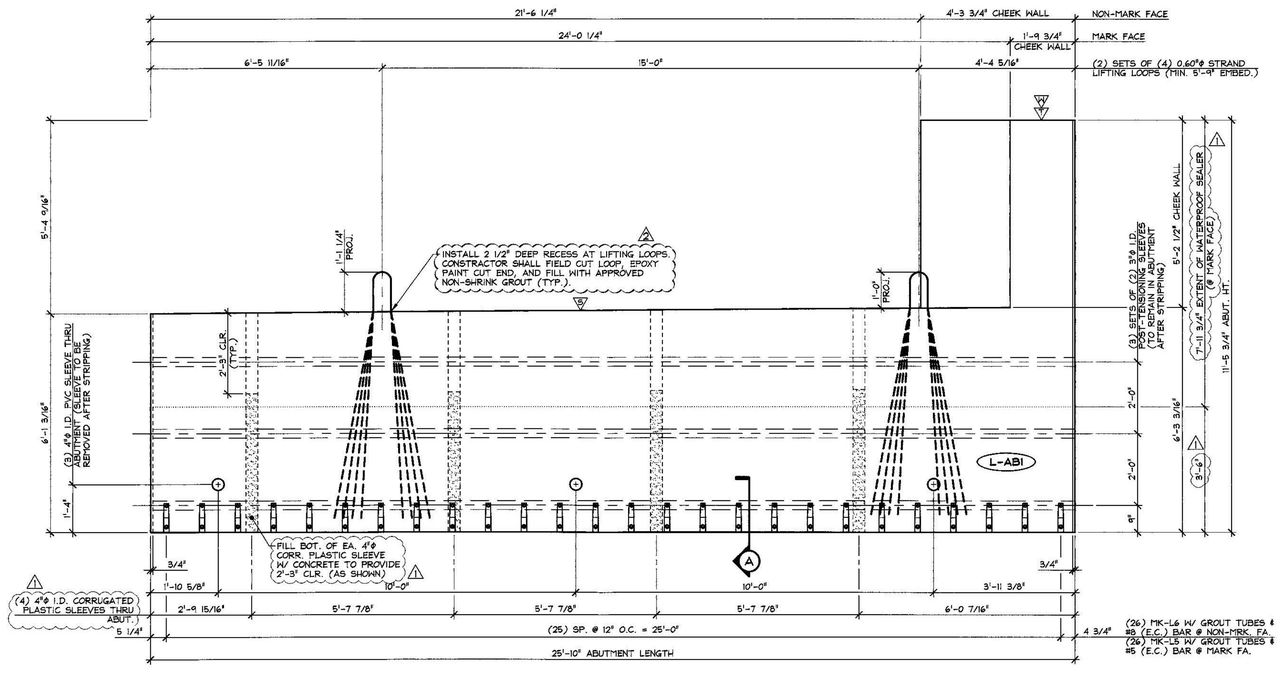


MARK FACE ELEVATION

1/2" = 1'-0"

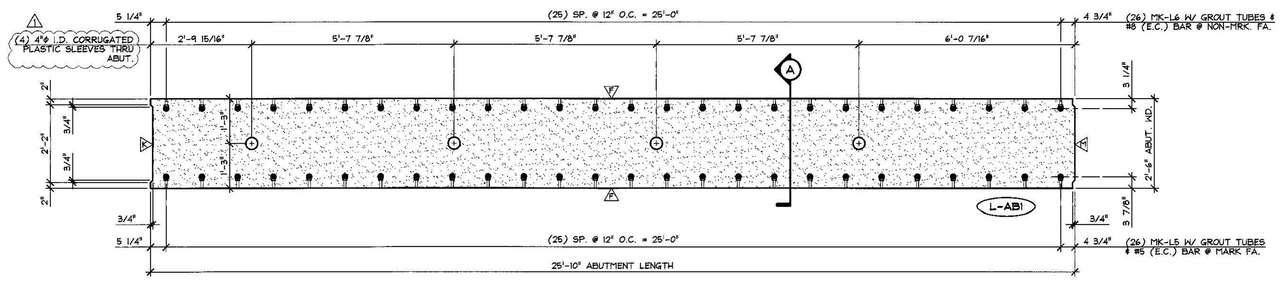


BOTTOM OF FORM - NMB SPLICE SLEEVE PLAN

1/2" = 1'-0"

Vermont Agency of Transportation

RECEIVED

ON: May 12, 2015

and Checked for

CONFORMANCE

BY: Todd A. Sumner DATE: 05/13/2015

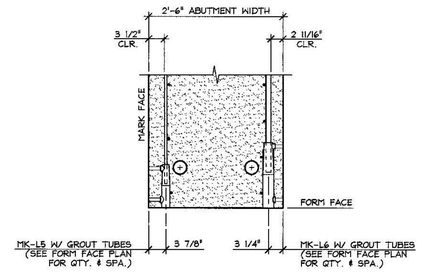


A SPLICE SLEEVE DETAIL

3/4" = 1'-0"

A DENOTES SMOOTH SCREED FINISH
A DENOTES (1) COAT WATERPROOF SEALER
A DENOTES FORM FINISH
A DENOTES ROUGHENED FINISH
A DENOTES STEEL TROWEL FINISH
A DENOTES MATCH CAST

**SHOP NOTE:**
f'c = 5,000 PSI
f'ci = 3,500 PSI
MIX #445MSCC

SUBMITTAL REVIEW

Review is only for general conformity to the contract drawings and specifications and shall not relieve the contractor of his entire responsibility under the contract, including among other things, dimensions to be confirmed and correlated at the job site, and information that pertains to the fabrication processes or to techniques of construction.

☑ NO EXCEPTIONS TAKEN
☐ MAKE CORRECTIONS NOTED RESUBMITTAL NOT REQUIRED
☐ AMEND AND RESUBMIT
☐ REJECTED - SEE REMARKS

PB AMERICAS, INC.
BY: Ray L. Hamm
DATE: 5/12/2015

| MARK: L-AB1 | QTY.: 1 | WT.: 32.88 T | VOL.: 16.24 cy |
|---|---|---|---|

MATERIAL LIST / ABUTMENT

| ITEM | MARK | DESCRIPTION | QTY. |
|---|---|---|---|
| 1 | MK-L5 | NMB SPLICE SLEEVE 5U-X(PG) (EPOXY COATED) | 26 |
| 2 | MK-L6 | NMB SPLICE SLEEVE 8U-X(PG) (EPOXY COATED) | 26 |
| 3 | | | |
| 4 | | SET OF (4) 0.60"ϕ STRAND LIFTING LOOPS | 2 |
| 5 | | | |
| 6 | A | 4"ϕ I.D. x 6'-3" CORRUGATED PLASTIC SLEEVE | 4 |
| 7 | | | |
| 8 | | | |
| 9 | | | |
| 10 | | | |

A 5-11-15 REVISED AS NOTED
A 4-27-15 GENERAL REVISIONS

APPROVAL STAMP:

J.P. CARRARA & SONS INC.
Precast & Prestress Manufacturer
2464 CASE STR., MIDDLEBURY, VERMONT 05753 Phone:(802)388-6361 Fax:(802)388-9010

J.A. McDONALD, INC.
CONTRACTOR
LYNDON CENTER, VERMONT

STATE OF VERMONT AGENCY OF TRANSPORTATION
COUNTY OF ADDISON

TOWN OF LINCOLN
TH 1 (RURAL MAJOR COLLECTOR) OVER NEW HAVEN RIVER
BRIDGE NO.: 19 PROJECT NO.: BRF 0188 (8)

PRECAST ABUTMENT
DIMENSIONAL DETAILS

DATE: FEB. 6, 2015
SCALE: NOTED
CHKD: M.W. DFTM: B.L.
JOB NO: 23459-015
DWG. NO: AB1

F:\VT-Bridges\23459-15 Lincoln Bridge 19\23459-AB1.dwg, 5/11/2015 1:09:11 PM

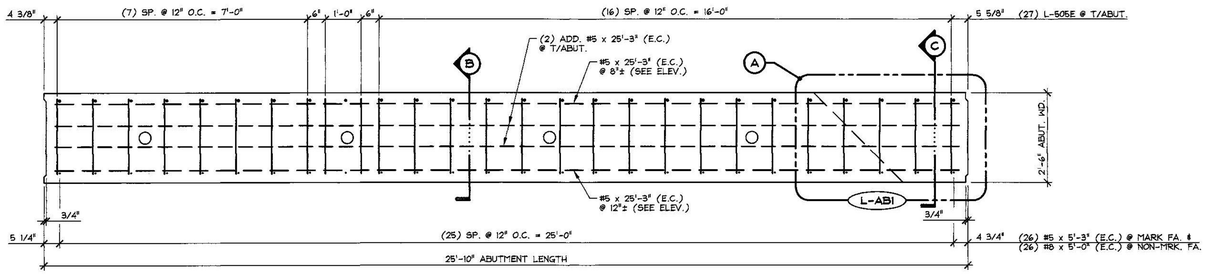


## REINFORCING PLAN VIEW IN FORM

1/2" = 1'-0"

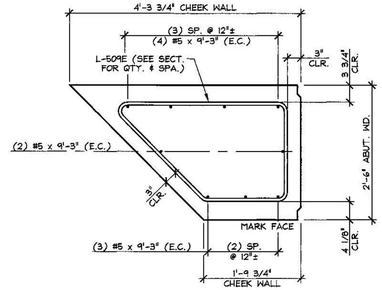


## A CHEEK WALL REINF. PLAN

3/4" = 1'-0"

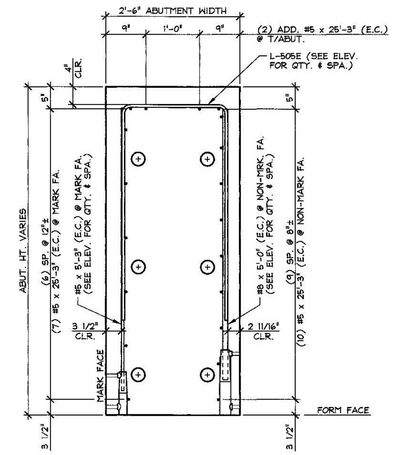


## B REINFORCING SECTION

3/4" = 1'-0"

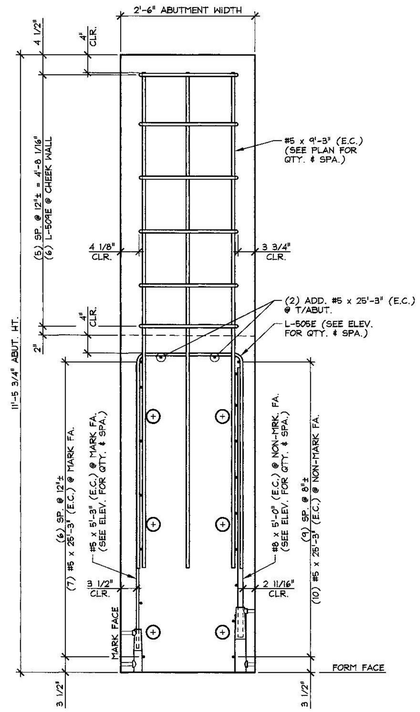


## C REINFORCING SECTION

3/4" = 1'-0"

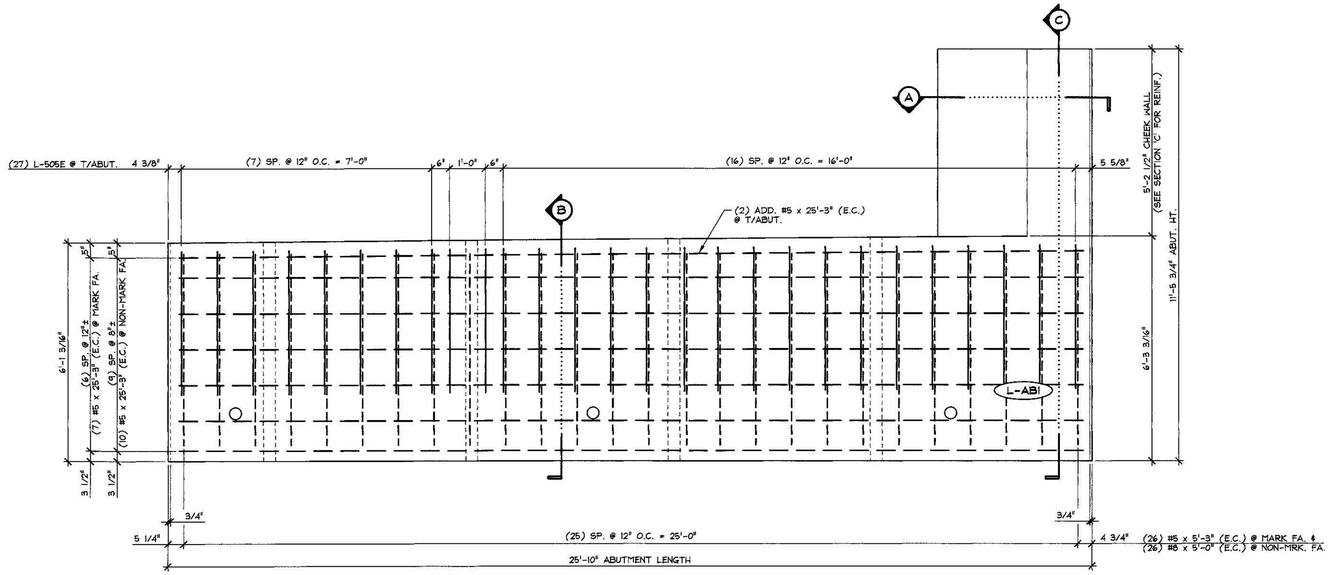


## MARK FACE REINFORCING ELEVATION

1/2" = 1'-0"

Vermont Agency of Transportation

RECEIVED

ON: May 12, 2015

and Checked for

CONFORMANCE

BY: Todd A. Sumner DATE: 05/13/2015

SUBMITTAL REVIEW

Review is only for general conformity to the contract drawings and specifications and shall not relieve the contractor of his entire responsibility under the contract, including among other things, dimensions to be confirmed and correlated at the job site, and information that pertains to the fabrication processes or to techniques of construction.

- [x] NO EXCEPTIONS TAKEN
- [ ] MAKE CORRECTIONS NOTED RESUBMITTAL NOT REQUIRED
- [ ] AMEND AND RESUBMIT
- [ ] REJECTED - SEE REMARKS

PB AMERICAS, INC.

BY: Ray L. Jones

DATE: 5/12/2015

| MARK: L-ABI | QTY.: 1 |
|---|---|

MATERIAL LIST / ABUTMENT

| ITEM | MARK | DESCRIPTION | QTY. |
|---|---|---|---|
| 1 | L-505E | #5 BENT BAR (LEVEL I, EPOXY COATED) | 27 |
| 2 | L-509E | #5 BENT BAR (LEVEL I, EPOXY COATED) | 6 |
| 3 | | #5 x 25'-3" (LEVEL I, EPOXY COATED) | 19 |
| 4 | | #5 x 5'-3" (LEVEL I, EPOXY COATED) | 26 |
| 5 | | #5 x 9'-3" (LEVEL I, EPOXY COATED) | 9 |
| 6 | | | |
| 7 | | #8 x 5'-0" (LEVEL I, EPOXY COATED) | 26 |
| 8 | | | |
| 9 | | | |
| 10 | | | |

⚠ 4-27-15 GENERAL REVISIONS

APPROVAL STAMP:

J.P. CARRARA & SONS INC.
Precast & Prestress Manufacturer
2464 CASE STR., MIDDLEBURY, VERMONT 05753 Phone:(802)388-6361 Fax:(802)388-9010

J.A. McDONALD, INC.
CONTRACTOR
LYNDON CENTER, VERMONT

STATE OF VERMONT AGENCY OF TRANSPORTATION
COUNTY OF ADDISON

DATE: FEB. 6, 2015
SCALE: NOTED

TOWN OF LINCOLN
TH 1 (RURAL MAJOR COLLECTOR) OVER NEW HAVEN RIVER
BRIDGE NO.: 19 PROJECT NO.: BRF 0188 (8)

CHKD: M.W. DFTM: B.L.
JOB NO: 23459-015

# PRECAST ABUTMENT REINFORCING DETAILS

DWG. NO: AB1.1

F:\VT-Bridges\23459-15 Lincoln Bridge 19\23459-AB1-1.dwg, 4/28/2015 2:42:32 PM

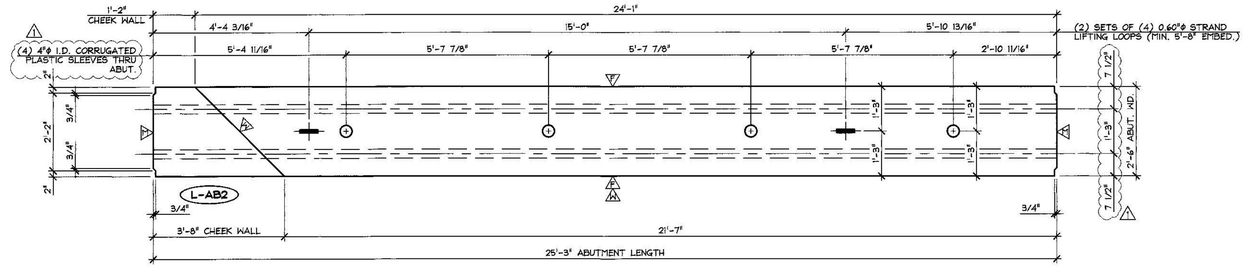


DIMENSIONAL PLAN VIEW IN FORM

1/2" = 1'-0"

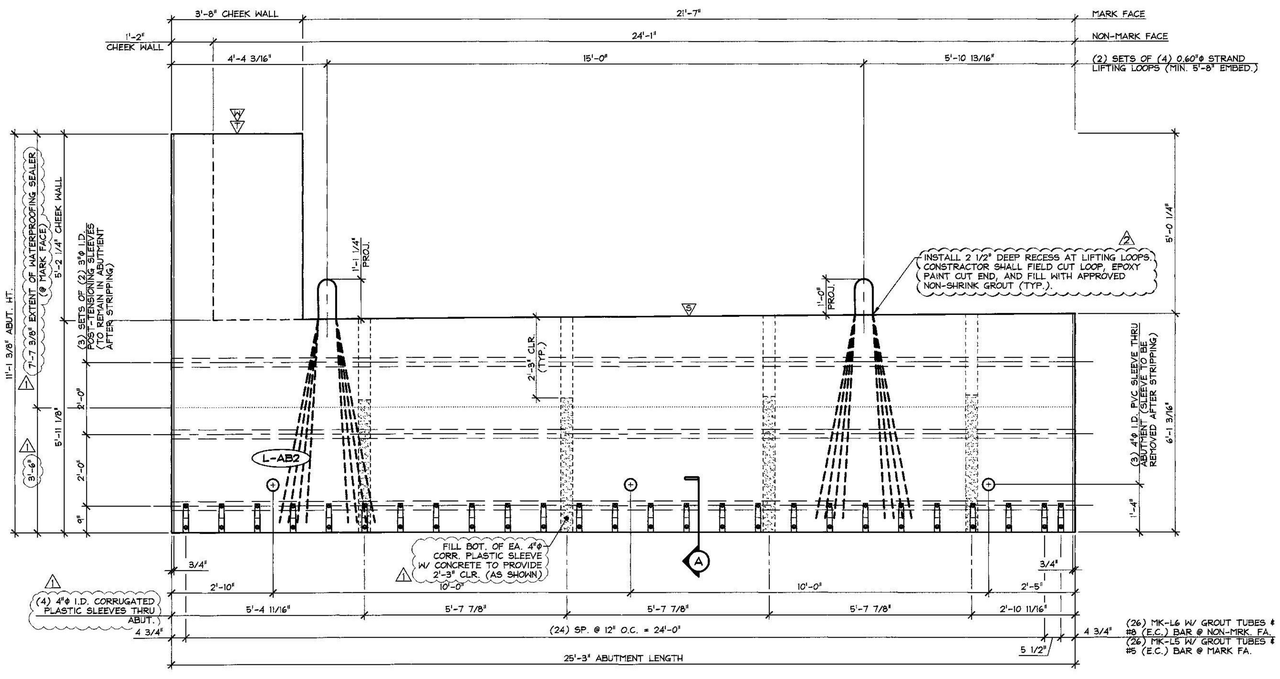


MARK FACE ELEVATION

1/2" = 1'-0"

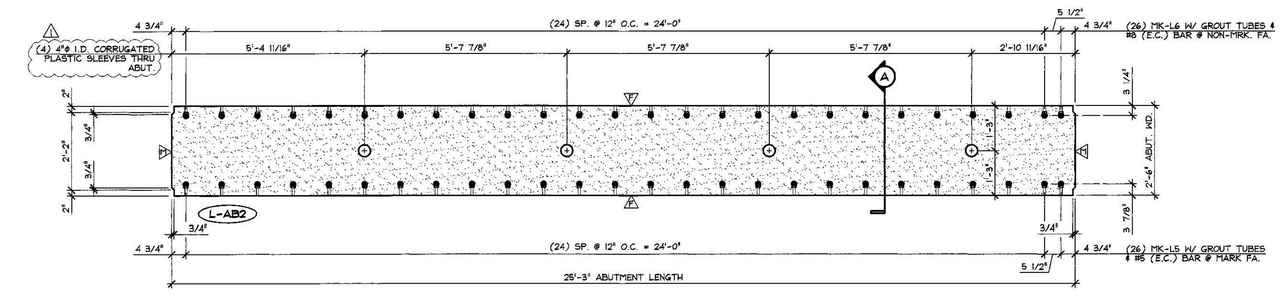


BOTTOM OF FORM - NMB SPLICE SLEEVE PLAN

1/2" = 1'-0"

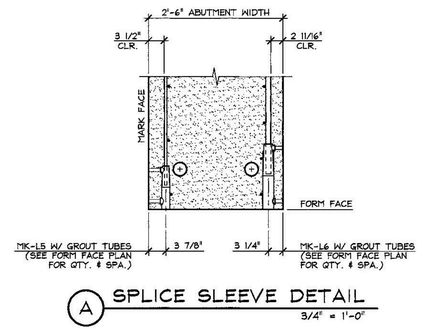


A SPLICE SLEEVE DETAIL

3/4" = 1'-0"

Vermont Agency of Transportation

RECEIVED

ON: May 12, 2015

and Checked for

CONFORMANCE

BY: Todd A. Sumner DATE: 05/13/2015

SUBMITTAL REVIEW

Review is only for general conformity to the contract drawings and specifications and shall not relieve the contractor of his entire responsibility under the contract, including among other things, dimensions to be confirmed and correlated at the job site, and information that pertains to the fabrication processes or to techniques of construction.

- ☑ NO EXCEPTIONS TAKEN
- ☐ MAKE CORRECTIONS NOTED RESUBMITTAL NOT REQUIRED
- ☐ AMEND AND RESUBMIT
- ☐ REJECTED - SEE REMARKS

PB AMERICAS, INC.

BY: Ray L. Hanna

DATE: 5/12/2015

△5 DENOTES SMOOTH SCREED FINISH

△4 DENOTES (1) COAT WATERPROOF SEALER

△3 DENOTES FORM FINISH

△2 DENOTES ROUGHENED FINISH

△1 DENOTES STEEL TROWEL FINISH

△ DENOTES MATCH CAST

**SHOP NOTE:**
f'c = 5,000 PSI
f'ci = 3,500 PSI
MIX #445MSCC

| MARK: L-AB2 | QTY.: 1 | WT.: 30.79 T | VOL.: 15.21 cy |
|---|---|---|---|

MATERIAL LIST / ABUTMENT

| ITEM | MARK | DESCRIPTION | QTY. |
|---|---|---|---|
| 1 | MK-L5 | NMB SPLICE SLEEVE 5U-X(PG) (EPOXY COATED) | 26 |
| 2 | MK-L6 | NMB SPLICE SLEEVE 8U-X(PG) (EPOXY COATED) | 26 |
| 3 | | | |
| 4 | | SET OF (4) 0.60"ø STRAND LIFTING LOOPS | 2 |
| 5 | | | |
| 6 | △1 | 4"ø I.D. x 6'-1" CORRUGATED PLASTIC SLEEVE | 4 |
| 7 | | | |
| 8 | | | |
| 9 | | | |
| 10 | | | |

△5 5-11-15 REVISED AS NOTED

△1 4-27-15 GENERAL REVISIONS

APPROVAL STAMP:

J.P. CARRARA & SONS INC.
Precast & Prestress Manufacturer
2464 CASE STR., MIDDLEBURY, VERMONT 05753 Phone:(802)388-6361 Fax:(802)388-9010

J.A. McDONALD, INC.
CONTRACTOR
LYNDON CENTER, VERMONT

STATE OF VERMONT AGENCY OF TRANSPORTATION
COUNTY OF ADDISON

DATE: FEB. 6, 2015
SCALE: NOTED
CHKD: M.W. DFTM: B.L.
JOB NO: 23459-015

TOWN OF LINCOLN
TH 1 (RURAL MAJOR COLLECTOR) OVER NEW HAVEN RIVER
BRIDGE NO.: 19 PROJECT NO.: BRF 0188 (8)

PRECAST ABUTMENT
DIMENSIONAL DETAILS

DWG. NO: AB2

F:\VT-Bridges\23459-15 Lincoln Bridge 19\23459-AB2.dwg, 5/11/2015 1:09:54 PM

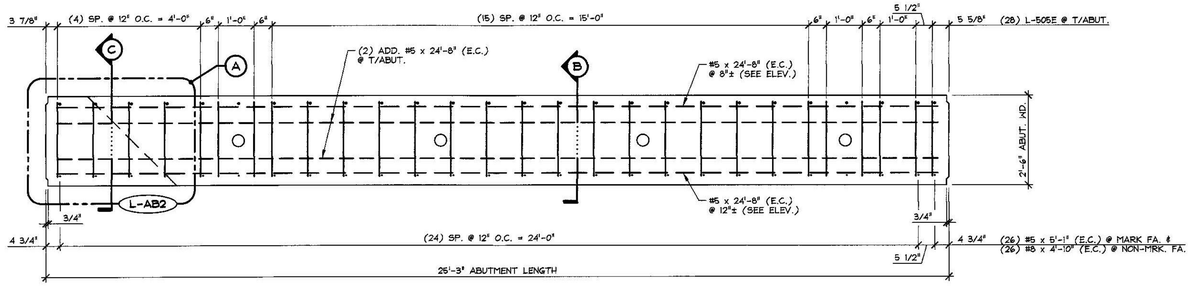


## REINFORCING PLAN VIEW IN FORM
1/2" = 1'-0"

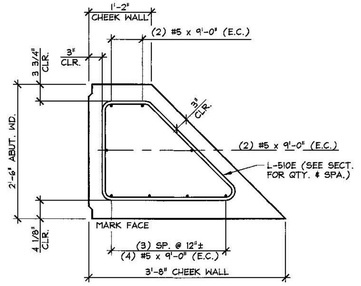


## A CHEEK WALL REINF. PLAN
3/4" = 1'-0"

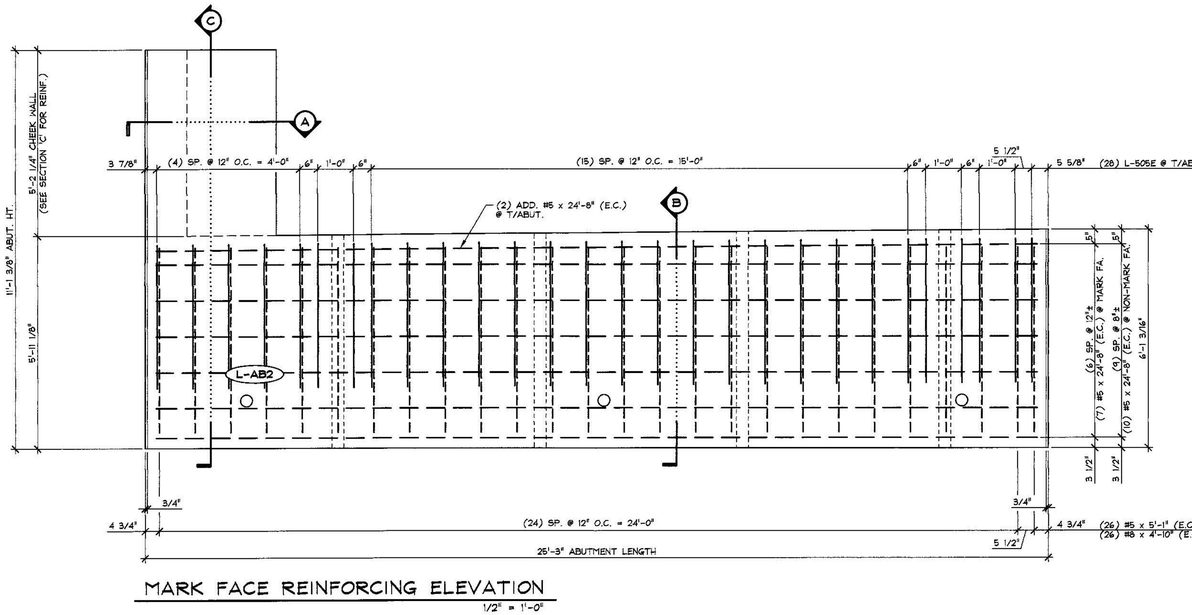


## MARK FACE REINFORCING ELEVATION
1/2" = 1'-0"

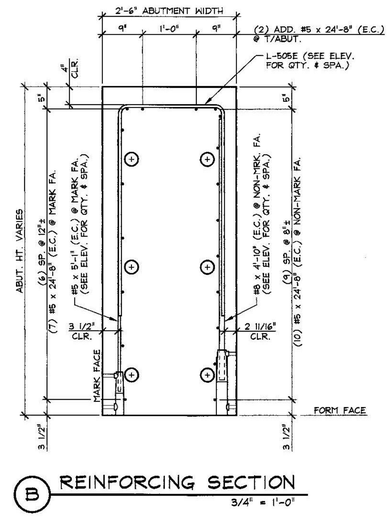


## B REINFORCING SECTION
3/4" = 1'-0"

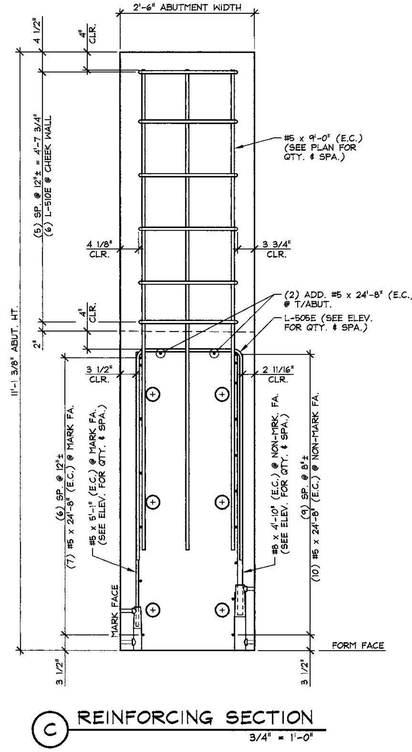


## C REINFORCING SECTION
3/4" = 1'-0"

| MARK: L-AB2 | QTY.: 1 |
|---|---|

MATERIAL LIST / ABUTMENT

| ITEM | MARK | DESCRIPTION | QTY. |
|---|---|---|---|
| 1 | L-505E | #5 BENT BAR (LEVEL I, EPOXY COATED) | 28 |
| 2 | L-510E | #5 BENT BAR (LEVEL I, EPOXY COATED) | 6 |
| 3 | | #5 x 24'-8" (LEVEL I, EPOXY COATED) | 19 (20) |
| 4 | | #5 x 5'-1" (LEVEL I, EPOXY COATED) | 26 |
| 5 | | #5 x 9'-0" (LEVEL I, EPOXY COATED) | 8 |
| 6 | | | |
| 7 | | #5 x 4'-10" (LEVEL I, EPOXY COATED) | 26 |
| 8 | | | |
| 9 | | | |
| 10 | | | |

Vermont Agency of Transportation
RECEIVED
ON: May 12, 2015
and Checked for
CONFORMANCE
BY: Todd A. Sumner DATE: 05/13/2015

SUBMITTAL REVIEW
Review is only for general conformity to the contract drawings and specifications and shall not relieve the contractor of his entire responsibility under the contract, including among other things, dimensions to be confirmed and correlated at the job site, and information that pertains to the fabrication processes or to techniques of construction.
☑ NO EXCEPTIONS TAKEN
☐ MAKE CORRECTIONS NOTED RESUBMITTAL NOT REQUIRED
☐ AMEND AND RESUBMIT
☐ REJECTED - SEE REMARKS
PB AMERICAS, INC.
BY: Ray L. Bowe
DATE: 5/12/2015

⚠ 4-27-15 GENERAL REVISIONS

APPROVAL STAMP:

J.P. CARRARA & SONS INC.
Precast & Prestress Manufacturer
2484 OGE STR., MIDDLEBURY, VERMONT 05753 Phone:(802)388-6361 Fax:(802)388-9010

J.A. McDONALD, INC.
CONTRACTOR
LYNDON CENTER, VERMONT

STATE OF VERMONT AGENCY OF TRANSPORTATION
COUNTY OF ADDISON

DATE: FEB. 6, 2015
SCALE: NOTED
CHKD: M.W. DFTM: B.L.
JOB NO: 23459-015

TOWN OF LINCOLN
TH 1 (RURAL MAJOR COLLECTOR) OVER NEW HAVEN RIVER
BRIDGE NO.: 19 PROJECT NO.: BRF 0188 (8)

# PRECAST ABUTMENT REINFORCING DETAILS

DWG. NO: AB2.1

F:\VT-Bridges\23459-15 Lincoln Bridge 19\23459-AB2-1.dwg, 4/28/2015 2:46:41 PM

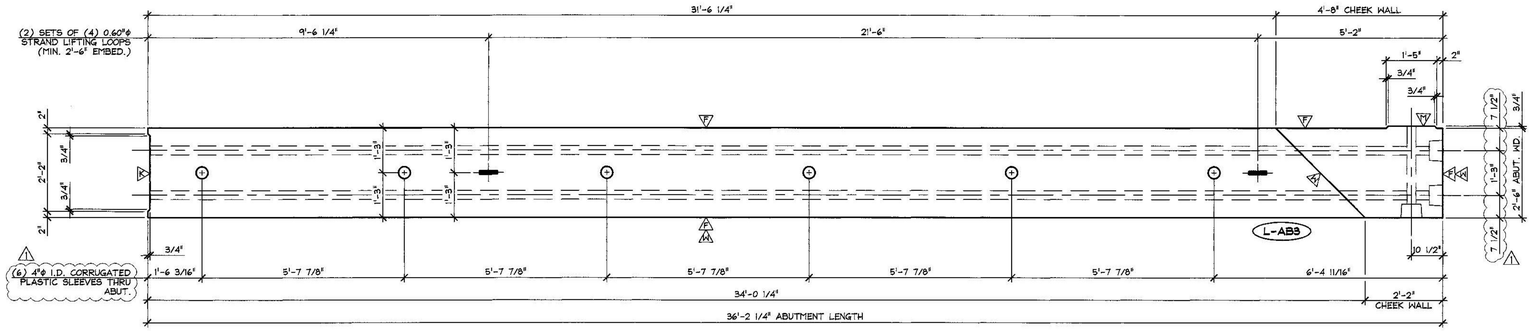


## DIMENSIONAL PLAN VIEW IN FORM

1/2" = 1'-0"

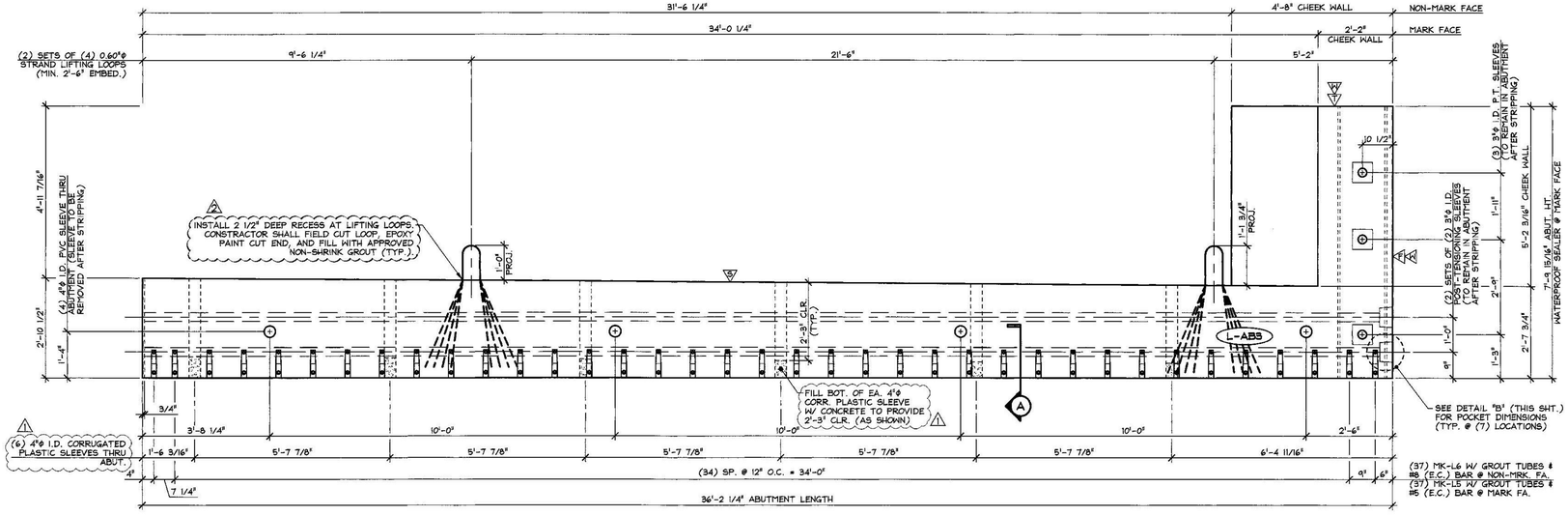


## MARK FACE ELEVATION

1/2" = 1'-0"

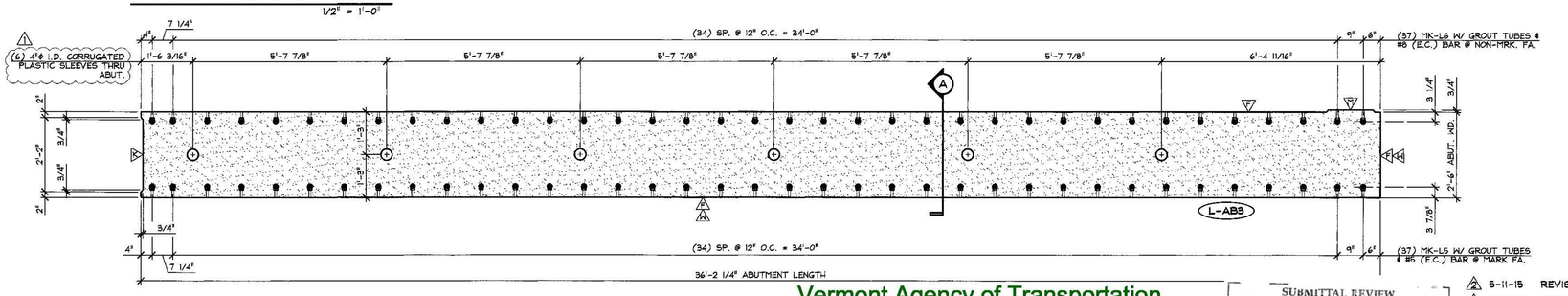


## BOTTOM OF FORM - NMB SPLICE SLEEVE PLAN

1/2" = 1'-0"

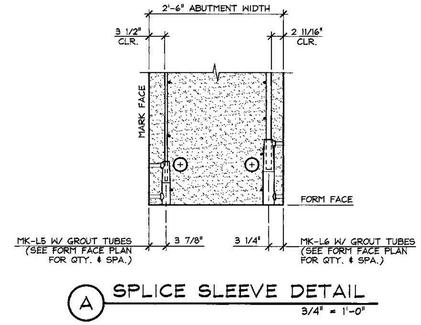


## A SPLICE SLEEVE DETAIL

3/4" = 1'-0"

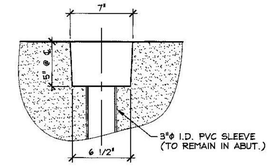


## B P.T. POCKET DETAIL

1 1/2" = 1'-0"

- A DENOTES SMOOTH SCREED FINISH
- A DENOTES (1) COAT WATERPROOF SEALER
- A DENOTES FORM FINISH
- A DENOTES ROUGHENED FINISH
- A DENOTES STEEL TROWEL FINISH
- A DENOTES MATCH CAST

**SHOP NOTE:**
f'c = 5,000 PSI
f'ci = 3,500 PSI
MIX #445MSCC

| MARK: L-AB3 | QTY.: 1 | WT.: 22.05 T | VOL.: 10.89 cy |
|---|---|---|---|

MATERIAL LIST / ABUTMENT

| ITEM | MARK | DESCRIPTION | QTY. |
|---|---|---|---|
| 1 | MK-L6 | NMB SPLICE SLEEVE 8U-X(PG) (EPOXY COATED) | 37 |
| 2 | MK-L6 | NMB SPLICE SLEEVE 8U-X(PG) (EPOXY COATED) | 37 |
| 3 | | | |
| 4 | | SET OF (4) 0.60"ϕ STRAND LIFTING LOOPS | 2 |
| 5 | | | |
| 6 | 1 | 4"ϕ I.D. x 2'-10 1/2" CORRUGATED PLASTIC SLEEVE | 6 |
| 7 | | | |
| 8 | | | |
| 9 | | | |
| 10 | | | |

2 5-11-15 REVISED AS NOTED
1 4-27-15 GENERAL REVISIONS

Vermont Agency of Transportation
2015-05-13 Lincln BRF 0188(8) Precast_G_sht###.dgn

RECEIVED
ON: May 12, 2015
and Checked for
CONFORMANCE
BY: Todd A. Sumner DATE: 05/13/2015

SUBMITTAL REVIEW

Review is only for general conformity to the contract drawings and specifications and shall not relieve the contractor of his entire responsibility under the contract, including among other things, dimensions to be confirmed and correlated at the job site, and information that pertains to the fabrication processes or to techniques of construction.

- [x] NO EXCEPTIONS TAKEN
- [ ] MAKE CORRECTIONS NOTED RESUBMITTAL NOT REQUIRED
- [ ] AMEND AND RESUBMIT
- [ ] REJECTED - SEE REMARKS

PB AMERICAS, INC.
BY: Ray L. Young
DATE: 5/12/2015

APPROVAL STAMP:

J.P. CARRARA & SONS INC.
Precast & Prestress Manufacturer
2464 CASE STR., MIDDLEBURY, VERMONT 05753 Phone:(802)388-6361 Fax:(802)388-9010

J.A. McDONALD, INC.
CONTRACTOR
LYNDON CENTER, VERMONT

STATE OF VERMONT AGENCY OF TRANSPORTATION
COUNTY OF ADDISON

TOWN OF LINCOLN
TH 1 (RURAL MAJOR COLLECTOR) OVER NEW HAVEN RIVER
BRIDGE NO.: 19 PROJECT NO.: BRF 0188 (8)

PRECAST ABUTMENT
DIMENSIONAL DETAILS

DATE: FEB. 6, 2015
SCALE: NOTED
CHKD: M.W. DFTM: B.L.
JOB NO: 23459-015
DWG. NO: AB3

F:\VT-Bridges\23459-15 Lincoln Bridge 19\23459-AB3.dwg, 5/11/2015 1:23:36 PM

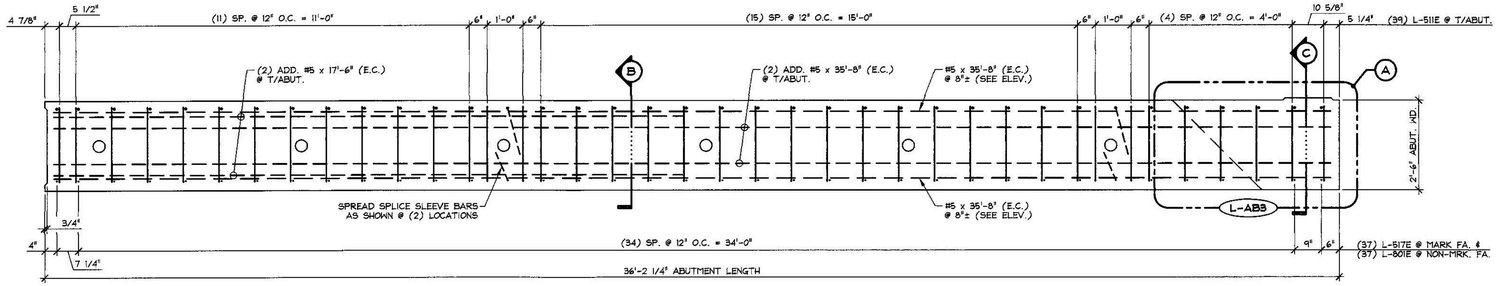


## REINFORCING PLAN VIEW IN FORM
1/2" = 1'-0"

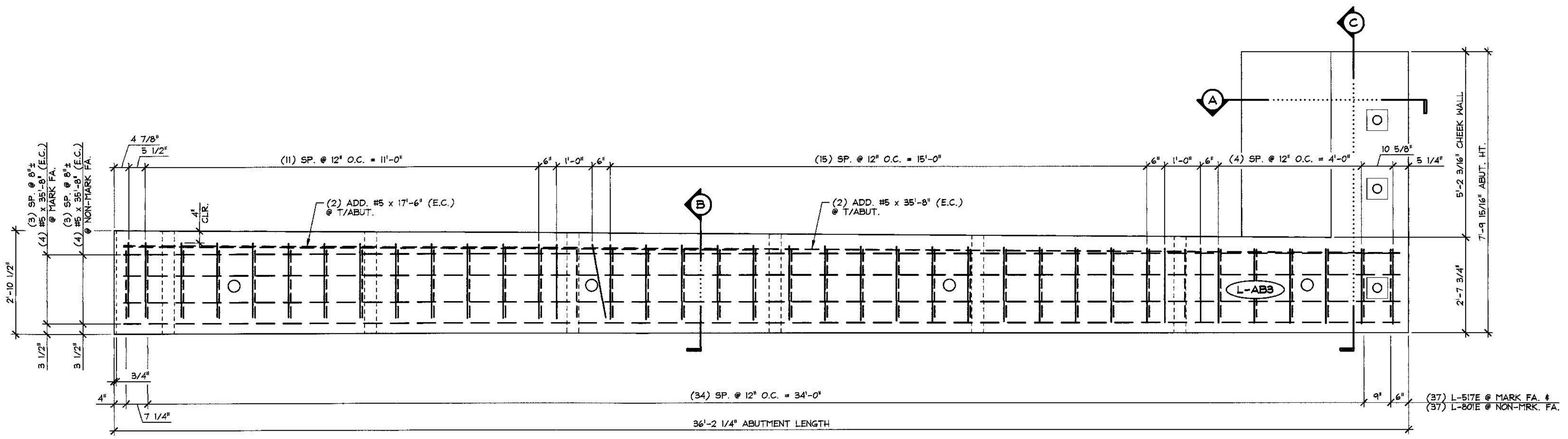


## MARK FACE REINFORCING ELEVATION
1/2" = 1'-0"

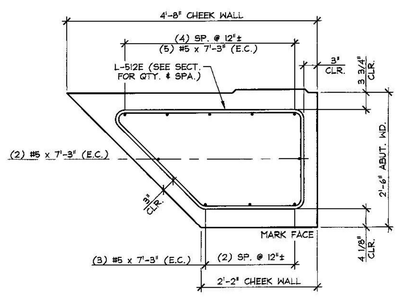


## A CHEEK WALL REINF. PLAN
3/4" = 1'-0"

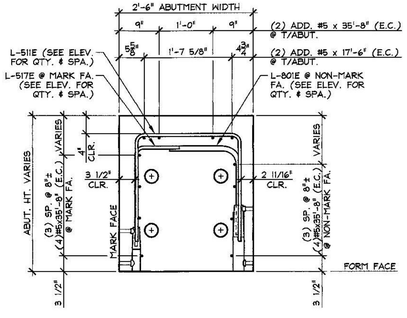


## B REINFORCING SECTION
3/4" = 1'-0"

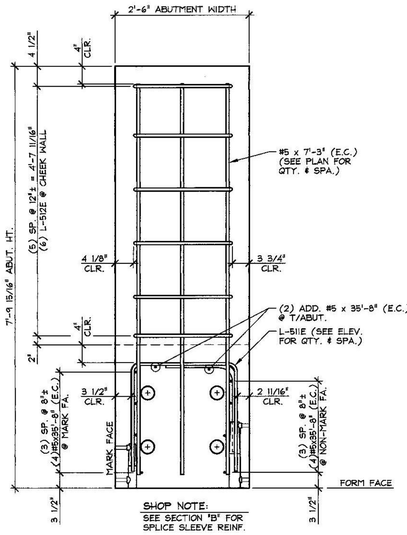


## C REINFORCING SECTION
3/4" = 1'-0"

Vermont Agency of Transportation

RECEIVED
ON: May 12, 2015
and Checked for
CONFORMANCE
BY: Todd A. Sumner DATE: 05/13/2015

SUBMITTAL REVIEW

Review is only for general conformity to the contract drawings and specifications and shall not relieve the contractor of his entire responsibility under the contract, including among other things, dimensions to be confirmed and correlated at the job site, and information that pertains to the fabrication processes or to techniques of construction.

- [x] NO EXCEPTIONS TAKEN
- [ ] MAKE CORRECTIONS NOTED RESUBMITTAL NOT REQUIRED
- [ ] AMEND AND RESUBMIT
- [ ] REJECTED - SEE REMARKS

PB AMERICAS, INC.
BY: Gary L. Flowers
DATE: 5/12/2015

⚠ 4-27-15 GENERAL REVISIONS

| MARK: L-AB3 | QTY.: 1 |
|---|---|

MATERIAL LIST / ABUTMENT

| ITEM | MARK | DESCRIPTION | QTY. |
|---|---|---|---|
| 1 | L-511E | #5 BENT BAR (LEVEL 1, EPOXY COATED) | 39 |
| 2 | L-512E | #5 BENT BAR (LEVEL 1, EPOXY COATED) | 6 |
| 3 | L-517E | #5 BENT BAR (LEVEL 1, EPOXY COATED) | 37 |
| 4 | | #5 x 35'-8" (LEVEL 1, EPOXY COATED) | 10 |
| 5 | | #5 x 7'-3" (LEVEL 1, EPOXY COATED) | 10 |
| 6 | | #5 x 17'-6" (LEVEL 1, EPOXY COATED) | 2 |
| 7 | | | |
| 8 | L-801E | #5 BENT BAR (LEVEL 1, EPOXY COATED) | 37 |
| 9 | | | |
| 10 | | | |

APPROVAL STAMP:

J.P. CARRARA & SONS INC.
Precast & Prestress Manufacturer
2464 CASE STR., MIDDLEBURY, VERMONT 05753 Phone:(802)388-6351 Fax:(802)388-9010

J.A. McDONALD, INC.
CONTRACTOR
LYNDON CENTER, VERMONT

STATE OF VERMONT AGENCY OF TRANSPORTATION
COUNTY OF ADDISON

DATE: FEB. 6, 2015
SCALE: NOTED

TOWN OF LINCOLN
TH 1 (RURAL MAJOR COLLECTOR) OVER NEW HAVEN RIVER
BRIDGE NO.: 19 PROJECT NO.: BRF 0188 (8)

CHKD: M.W. DFTM: B.L.
JOB NO: 23459-015

# PRECAST ABUTMENT REINFORCING DETAILS

DWG. NO: AB3.1

F:\VT-Bridges\23459-15 Lincoln Bridge 19\23459-AB3-1.dwg, 4/28/2015 2:57:32 PM

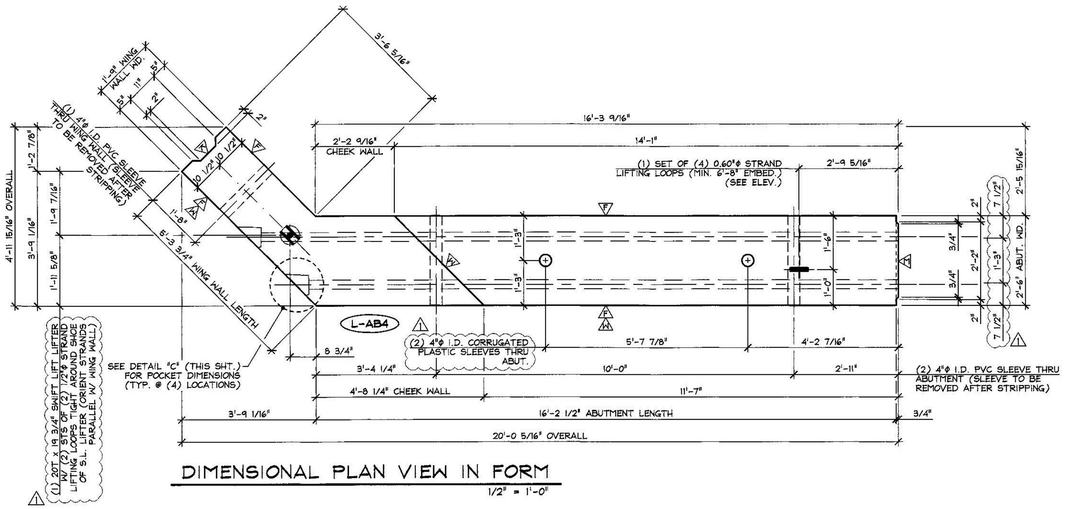


## DIMENSIONAL PLAN VIEW IN FORM
1/2" = 1'-0"

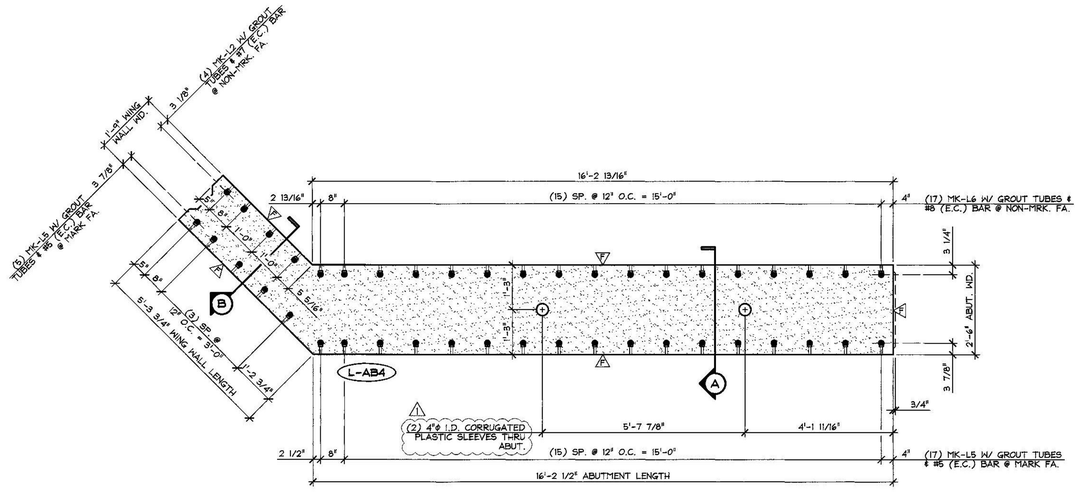


## BOTTOM OF FORM - NMB SPLICE SLEEVE PLAN
1/2" = 1'-0"

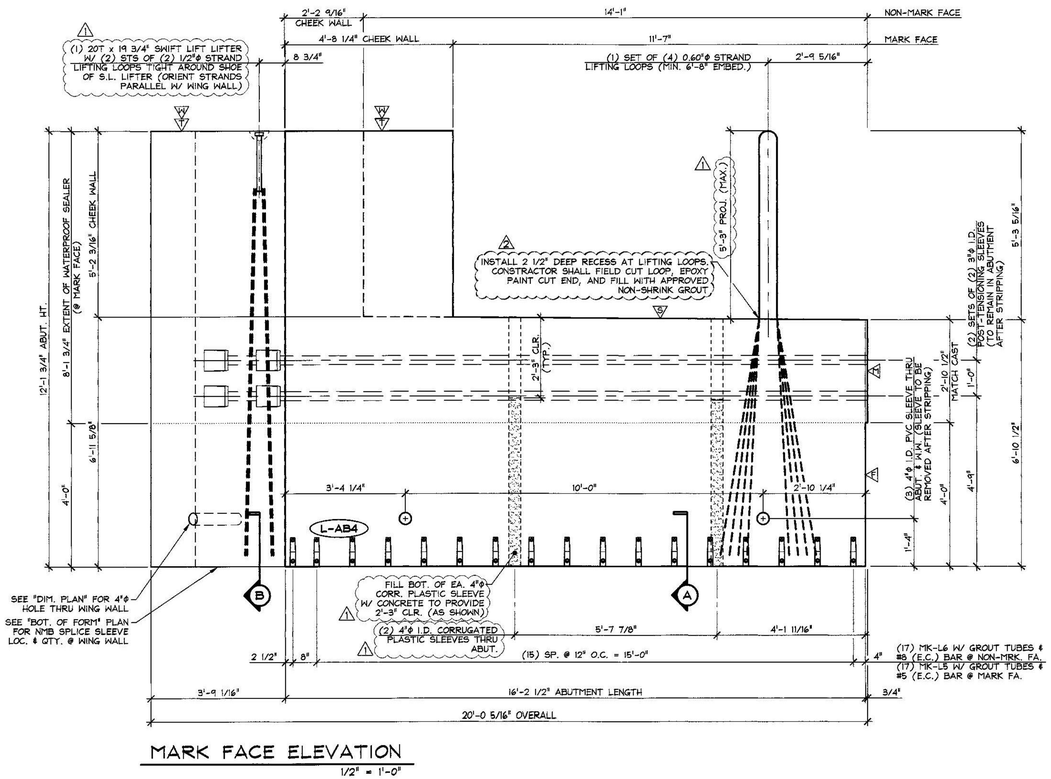


## MARK FACE ELEVATION
1/2" = 1'-0"

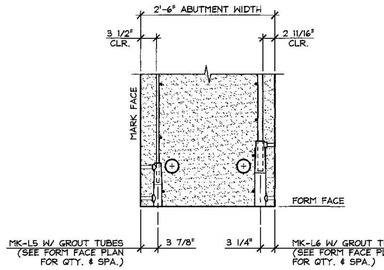


## A SPLICE SLEEVE DETAIL
3/4" = 1'-0"

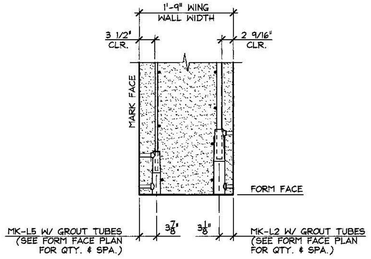


## B SPLICE SLEEVE DETAIL
3/4" = 1'-0"

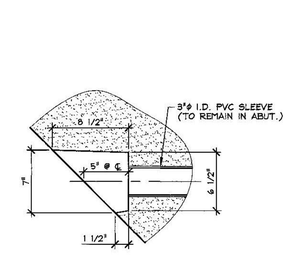


## C P.T. POCKET DETAIL
1 1/2" = 1'-0"

Vermont Agency of Transportation

RECEIVED
ON: May 12, 2015
and Checked for
CONFORMANCE
BY: Todd A. Sumner DATE: 05/13/2015

SUBMITTAL REVIEW
Review is only for general conformity to the contract drawings and specifications and shall not relieve the contractor of his entire responsibility under the contract, including among other things, dimensions to be confirmed and correlated at the job site, and information that pertains to the fabrication processes or to techniques of construction.
☑ NO EXCEPTIONS TAKEN
☐ MAKE CORRECTIONS NOTED
RESUBMITTAL NOT REQUIRED
☐ AMEND AND RESUBMIT
☐ REJECTED - SEE REMARKS
PB AMERICAS, INC.
BY: Ray L. Jones
DATE: 5/12/2015

△ DENOTES ROUGHENED FINISH
△ DENOTES SMOOTH SCREED FINISH
△ DENOTES STEEL TROWEL FINISH
△ DENOTES (1) COAT WATERPROOF SEALER
△ DENOTES MATCH CAST
△ DENOTES FORM FINISH

△ SHOP NOTE:
f'c = 5,000 PSI
f'ci = 5,000 PSI
MIX #448MSCC

| MARK: L-AB4 | QTY.: 1 | WT.: 31.38 T | VOL.: 15.50 cy |
|---|---|---|---|

MATERIAL LIST / ABUTMENT

| ITEM | MARK | DESCRIPTION | QTY. |
|---|---|---|---|
| 1 | MK-L2 | NMB SPLICE SLEEVE 7U-X(PG) (EPOXY COATED) | 4 |
| 2 | MK-L5 | NMB SPLICE SLEEVE 5U-X(PG) (EPOXY COATED) | 22 |
| 3 | MK-L6 | NMB SPLICE SLEEVE 8U-X(PG) (EPOXY COATED) | 17 |
| 4 | | | |
| 5 | | 20T x 19 3/4" SWIFT LIFT LIFTER (GALV.) | 1 |
| 6 | | SET OF (2) 1/2"ø STRAND LIFTING LOOPS | 2 |
| 7 | | SET OF (4) 0.60"ø STRAND LIFTING LOOPS | 1 |
| 8 | | | |
| 9 | △1 | 4"ø I.D. x 6'-11" CORRUGATED PLASTIC SLEEVE | 2 |
| 10 | | | |

△ 5-11-15 REVISED AS NOTED
△ 4-27-15 GENERAL REVISIONS

APPROVAL STAMP:

J.P. CARRARA & SONS INC.
Precast & Prestress Manufacturer
2464 CASE STR., MIDDLEBURY, VERMONT 05753 Phone:(802)388-6361 Fax:(802)388-9010

J.A. McDONALD, INC.
CONTRACTOR
LYNDON CENTER, VERMONT

STATE OF VERMONT AGENCY OF TRANSPORTATION
COUNTY OF ADDISON

TOWN OF LINCOLN
TH 1 (RURAL MAJOR COLLECTOR) OVER NEW HAVEN RIVER
BRIDGE NO.: 19 PROJECT NO.: BRF 0188 (8)

PRECAST ABUTMENT
DIMENSIONAL DETAILS

DATE: FEB. 6, 2015
SCALE: NOTED
CHKD: M.W. DFTM: B.L.
JOB NO: 23459-015
DWG. NO: AB4

F:\VT-Bridges\23459-15 Lincoln Bridge 19\23459-AB4.dwg, 5/11/2015 1:24:33 PM

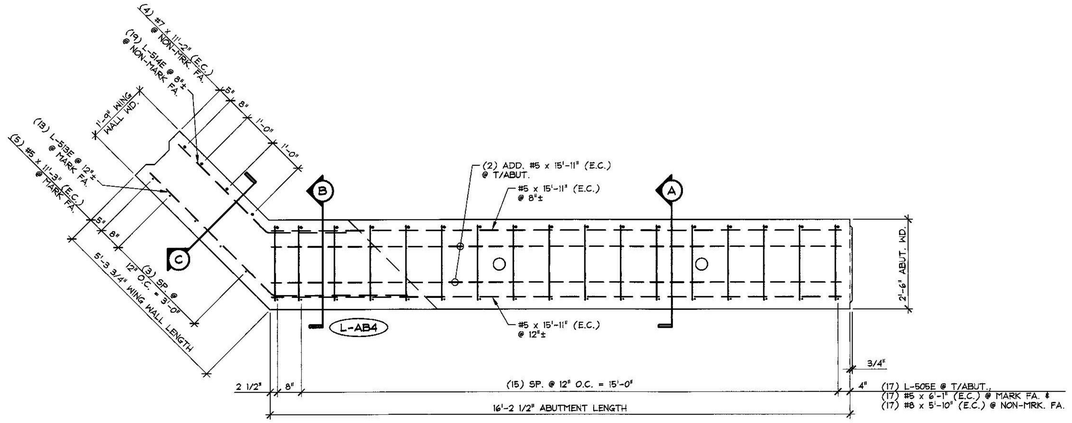


## REINFORCING PLAN VIEW IN FORM
ABUTMENT & WING WALL 1/2" = 1'-0"

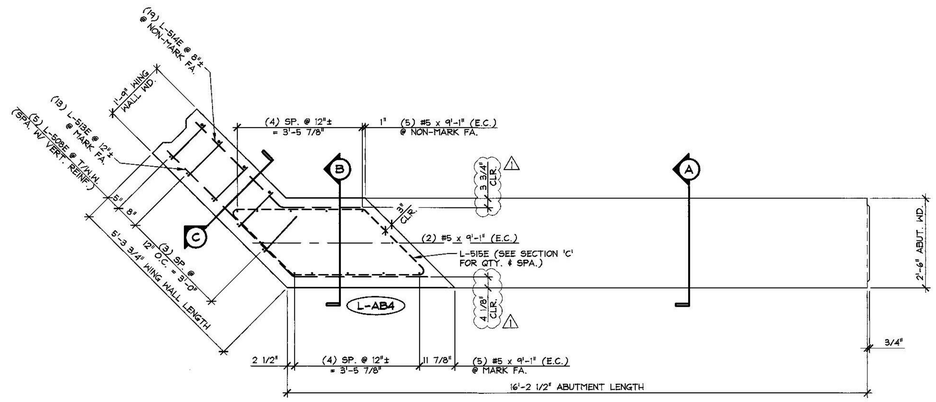


## REINFORCING PLAN VIEW IN FORM
CHEEK WALL & WING WALL 1/2" = 1'-0"

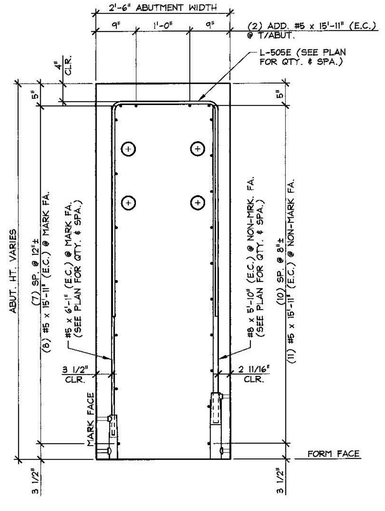


## A REINFORCING SECTION
ABUTMENT 3/4" = 1'-0"

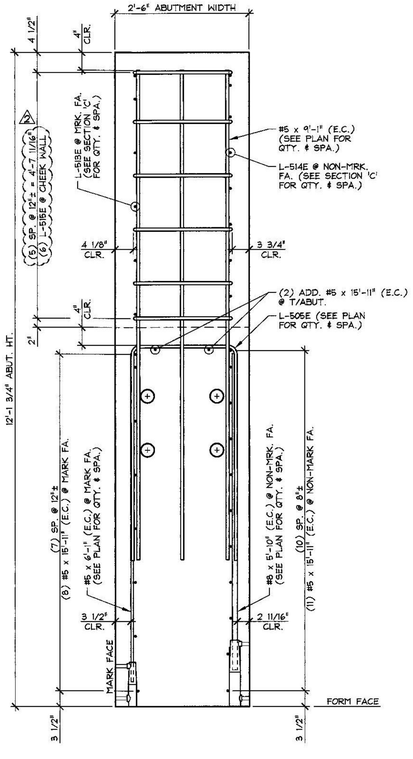


## B REINFORCING SECTION
ABUTMENT & CHEEK WALL 3/4" = 1'-0"

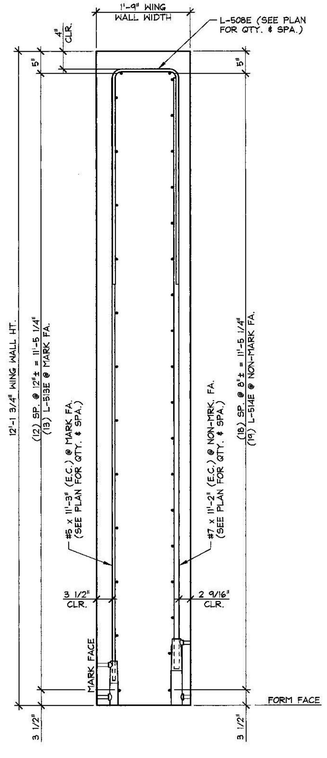


## C REINFORCING SECTION
WING WALL 3/4" = 1'-0"

Vermont Agency of Transportation

RECEIVED
ON: May 12, 2015
and Checked for
CONFORMANCE
BY: Todd A. Sumner DATE: 05/13/2015

**SUBMITTAL REVIEW**

Review is only for general conformity to the contract drawings and specifications and shall not relieve the contractor of his entire responsibility under the contract, including among other things, dimensions to be confirmed and correlated at the job site, and information that pertains to the fabrication processes or to techniques of construction.

- [x] NO EXCEPTIONS TAKEN
- [ ] MAKE CORRECTIONS NOTED RESUBMITTAL NOT REQUIRED
- [ ] AMEND AND RESUBMIT
- [ ] REJECTED - SEE REMARKS

PB AMERICAS, INC.
BY: Ray Lemay
DATE: 5/12/2015

MARK: L-AB4 QTY.: 1

**MATERIAL LIST / ABUTMENT**

| ITEM | MARK | DESCRIPTION | QTY. |
|---|---|---|---|
| 1 | L-505E | #5 BENT BAR (LEVEL I, EPOXY COATED) | 17 |
| 2 | L-508E | #5 BENT BAR (LEVEL I, EPOXY COATED) | 5 |
| 3 | L-513E | #5 BENT BAR (LEVEL I, EPOXY COATED) | 13 |
| 4 | L-514E | #5 BENT BAR (LEVEL I, EPOXY COATED) | 19 |
| 5 | L-515E | #5 BENT BAR (LEVEL I, EPOXY COATED) | 6 |
| 6 | | #5 x 15'-11" (LEVEL I, EPOXY COATED) | 21 |
| 7 | | #5 x 6'-1" (LEVEL I, EPOXY COATED) | 17 |
| 8 | | #5 x 11'-3" (LEVEL I, EPOXY COATED) | 5 |
| 9 | | #5 x 9'-1" (LEVEL I, EPOXY COATED) | 12 |
| 10 | | | |
| 11 | | #7 x 11'-2" (LEVEL I, EPOXY COATED) | 4 |
| 12 | | | |
| 13 | | #8 x 5'-10" (LEVEL I, EPOXY COATED) | 17 |
| 14 | | | |
| 15 | | | |

2 5-11-15 REVISED AS NOTED
1 4-27-15 GENERAL REVISIONS

APPROVAL STAMP:

J.P. CARRARA & SONS INC.
Precast & Prestress Manufacturer
2464 CASE STR., MIDDLEBURY, VERMONT 05753 Phone:(802)388-6361 Fax:(802)388-9010

J.A. McDONALD, INC.
CONTRACTOR
LYNDON CENTER, VERMONT

STATE OF VERMONT AGENCY OF TRANSPORTATION
COUNTY OF ADDISON

TOWN OF LINCOLN
TH 1 (RURAL MAJOR COLLECTOR) OVER NEW HAVEN RIVER
BRIDGE NO.: 19 PROJECT NO.: BRF 0188 (8)

PRECAST ABUTMENT
REINFORCING DETAILS

DATE: FEB. 6, 2015
SCALE: NOTED
CHKD: M.W. DFTM: B.L.
JOB NO: 23459-015
DWG. NO: AB4.1

F:\VT-Bridges\23459-15 Lincoln Bridge 19\23459-AB4-1.dwg, 5/11/2015 1:35:25 PM

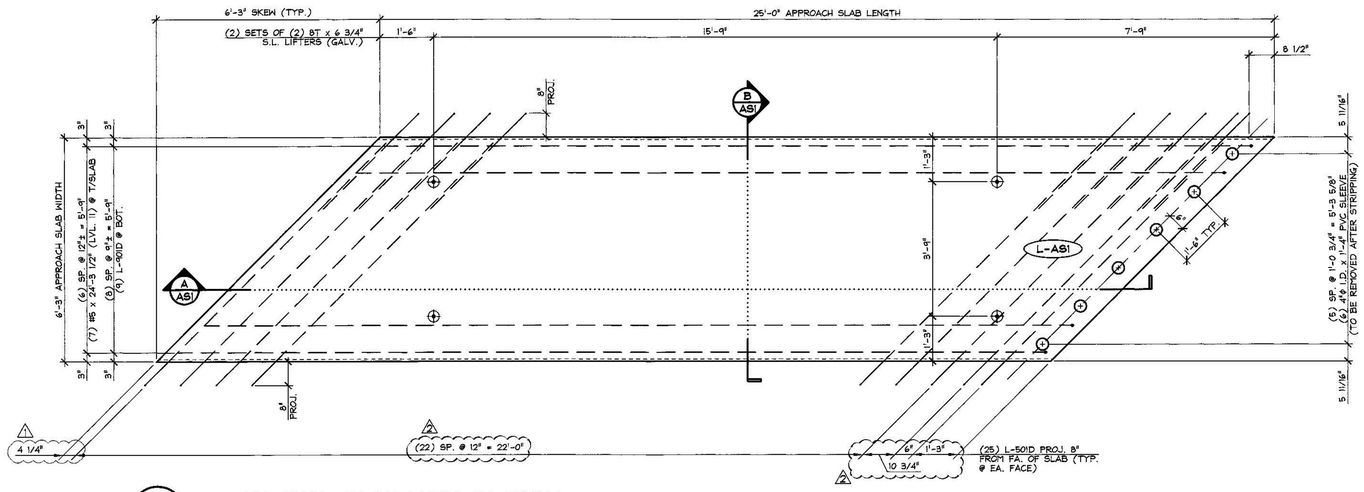


1 AS1 DIMENSIONAL PLAN VIEW IN FORM
1/2" = 1'-0"

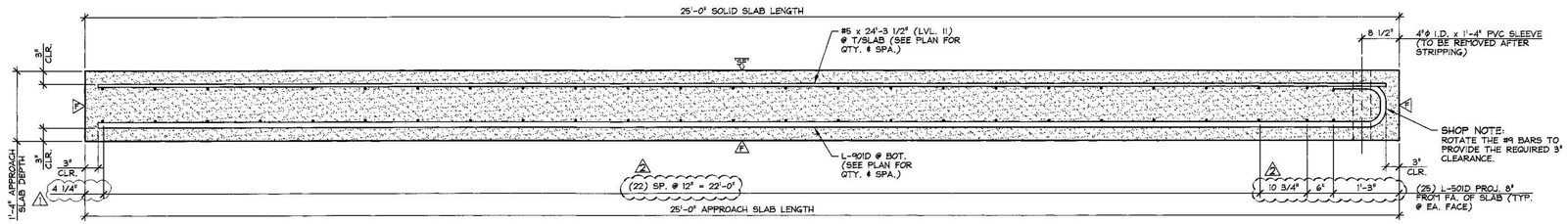


A AS1 LONGITUDINAL SECTION
3/4" = 1'-0"

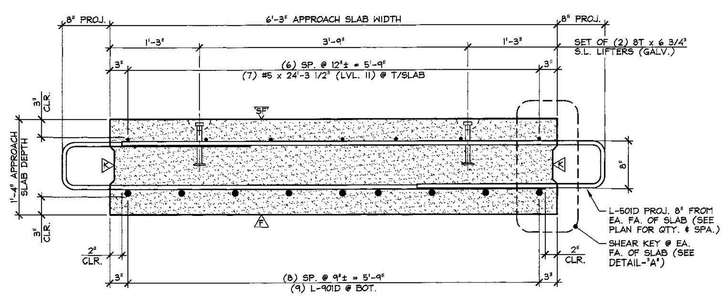


B AS1 LONGITUDINAL SECTION
1" = 1'-0"

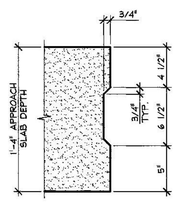


DETAIL - "A"
1 1/2" = 1'-0"

SUBMITTAL REVIEW

Review is only for general conformity to the contract drawings and specifications and shall not relieve the contractor of his entire responsibility under the contract, including among other things, dimensions to be confirmed and correlated at the job site, and information that pertains to the fabrication processes or to techniques of construction.

- [x] NO EXCEPTIONS TAKEN
- [ ] MAKE CORRECTIONS NOTED RESUBMITTAL NOT REQUIRED
- [ ] AMEND AND RESUBMIT
- [ ] REJECTED - SEE REMARKS

PB AMERICAS, INC.
BY: Ray L. Hanna
DATE: 5/12/2015

Vermont Agency of Transportation
RECEIVED
ON: May 12, 2015
and Checked for
CONFORMANCE
BY: Todd A. Sumner DATE: 05/13/2015

△ DENOTES FORM FINISH
SF DENOTES SMOOTH FLOAT FINISH
△ DENOTES ROUGHENED FINISH

**SHOP NOTE:**
F'c = 5,000 PSI
F'ci = 3,500 PSI
MIX #445MSCC

| MARK: L-AS1 | QTY.: 2 | WT.: 15.52 T | VOL.: 7.66 cy |
|---|---|---|---|

MATERIAL LIST / APPROACH SLAB

| ITEM | MARK | DESCRIPTION | QTY. |
|---|---|---|---|
| 1 | L-501D | #5 BENT BAR (LEVEL II, DUAL COATED) | 50 |
| 2 | | #5 x 24'-3 1/2" (LEVEL II, DUAL COATED) | 7 |
| 3 | | | |
| 4 | | | |
| 5 | L-901D | #9 BENT BAR (LEVEL II, DUAL COATED) | 9 |
| 6 | | | |
| 7 | | | |
| 8 | | 4"ø I.D. x 1'-4" PVC SLEEVE | 6 |
| 9 | | 8T x 6 3/4" SNIFT LIFT LIFTER (GALV.) | 4 |
| 10 | | | |

△2 5-11-15 REVISED AS NOTED
△1 4-27-15 GENERAL REVISIONS

APPROVAL STAMP:

J.P. CARRARA & SONS INC.
Precast & Prestress Manufacturer
2464 CASE ST., MIDDLEBURY, VERMONT 05753 Phone:(802)388-6361 Fax:(802)388-9010

J.A. McDONALD, INC.
CONTRACTOR
LYNDON CENTER, VERMONT

STATE OF VERMONT AGENCY OF TRANSPORTATION
COUNTY OF ADDISON

DATE: FEB. 6, 2015
SCALE: NOTED
CHKD: M.W. DFTM: B.L.
JOB NO: 23459-015

TOWN OF LINCOLN
TH 1 (RURAL MAJOR COLLECTOR) OVER NEW HAVEN RIVER
BRIDGE NO.: 19 PROJECT NO.: BRF 0188 (8)

PRECAST APPROACH SLAB DETAILS

DWG. NO: AS1

F:\VT-Bridges\23459-15 Lincoln Bridge 19\23459-AS1.dwg, 5/11/2015 1:43:36 PM

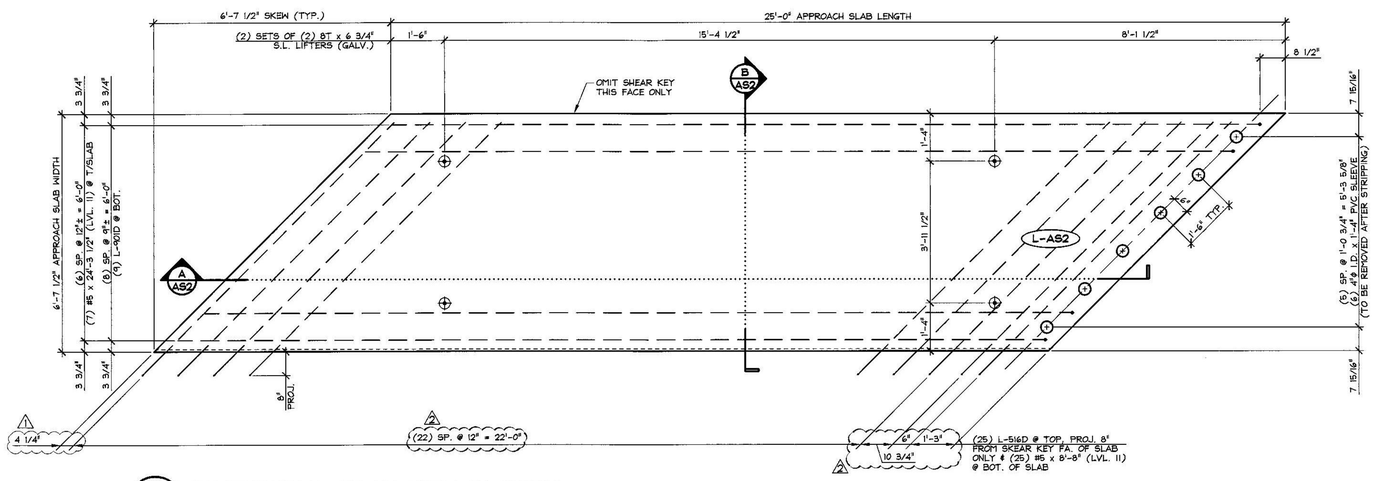


1 / AS2 DIMENSIONAL PLAN VIEW IN FORM
1/2" = 1'-0"

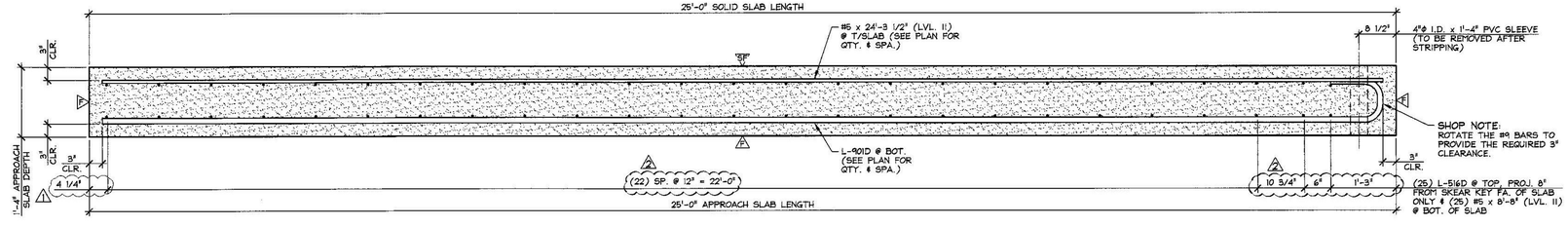


A / AS2 LONGITUDINAL SECTION
3/4" = 1'-0"

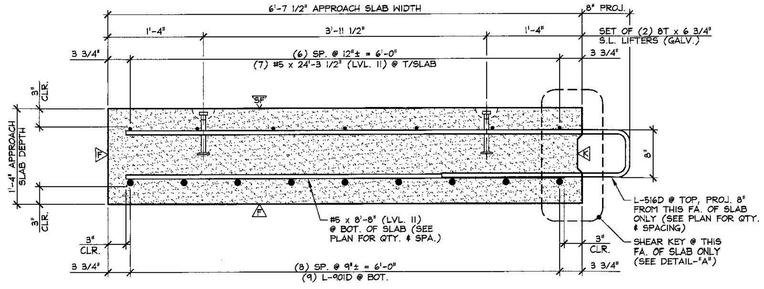


B / AS2 LONGITUDINAL SECTION
1" = 1'-0"

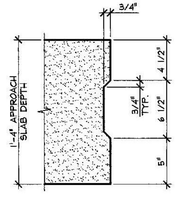


DETAIL - "A"
1 1/2" = 1'-0"

Vermont Agency of Transportation

RECEIVED
ON: May 12, 2015
and Checked for
CONFORMANCE
BY: Todd A. Sumner DATE: 05/13/2015

SUBMITTAL REVIEW

Review is only for general conformity to the contract drawings and specifications and shall not relieve the contractor of his entire responsibility under the contract, including among other things, dimensions to be confirmed and correlated at the job site, and information that pertains to the fabrication processes or to techniques of construction.

- ☑ NO EXCEPTIONS TAKEN
- ☐ MAKE CORRECTIONS NOTED RESUBMITTAL NOT REQUIRED
- ☐ AMEND AND RESUBMIT
- ☐ REJECTED - SEE REMARKS

PB AMERICAS, INC.
BY: Ray-Lee Jones
DATE: 5/12/2015

△ DENOTES FORM FINISH
△ DENOTES SMOOTH FLOAT FINISH
△ DENOTES ROUGHENED FINISH

**SHOP NOTE:**
f'c = 5,000 PSI
f'ci = 3,500 PSI
MIX #445MSCC

| MARK: L-AS2 | QTY.: 2 | WT.: 16.51 T | VOL.: 8.15 cy |
|---|---|---|---|

MATERIAL LIST / APPROACH SLAB

| ITEM | MARK | DESCRIPTION | QTY. |
|---|---|---|---|
| 1 | L-516D | #5 BENT BAR (LEVEL II, DUAL COATED) | 25 |
| 2 | | #5 x 8'-8" (LEVEL II, DUAL COATED) | 25 |
| 3 | | #5 x 24'-3 1/2" (LEVEL II, DUAL COATED) | 7 |
| 4 | | | |
| 5 | L-90ID | #9 BENT BAR (LEVEL II, DUAL COATED) | 9 |
| 6 | | | |
| 7 | | | |
| 8 | | 4"ø I.D. x 1'-4" PVC SLEEVE | 6 |
| 9 | | 8T x 6 3/4" SWIFT LIFT LIFTER (GALV.) | 4 |
| 10 | | | |

△2 5-11-15 REVISED AS NOTED
△1 4-27-15 GENERAL REVISIONS

APPROVAL STAMP:

J.P. CARRARA & SONS INC.
Precast & Prestress Manufacturer
2464 CASE STR., MIDDLEBURY, VERMONT 05753 Phone:(802)388-6361 Fax:(802)388-9010

J.A. McDONALD, INC.
CONTRACTOR
LYNDON CENTER, VERMONT

STATE OF VERMONT AGENCY OF TRANSPORTATION
COUNTY OF ADDISON

DATE: FEB. 6, 2015
SCALE: NOTED

TOWN OF LINCOLN
TH 1 (RURAL MAJOR COLLECTOR) OVER NEW HAVEN RIVER
BRIDGE NO.: 19 PROJECT NO.: BRF 0188 (8)

CHKD: M.W. DFTM: B.L.
JOB NO: 23459-015

PRECAST APPROACH SLAB DETAILS

DWG. NO: AS2

F:\VT-Bridges\23459-15 Lincoln Bridge 19\23459-AS2.dwg, 5/11/2015 1:46:35 PM

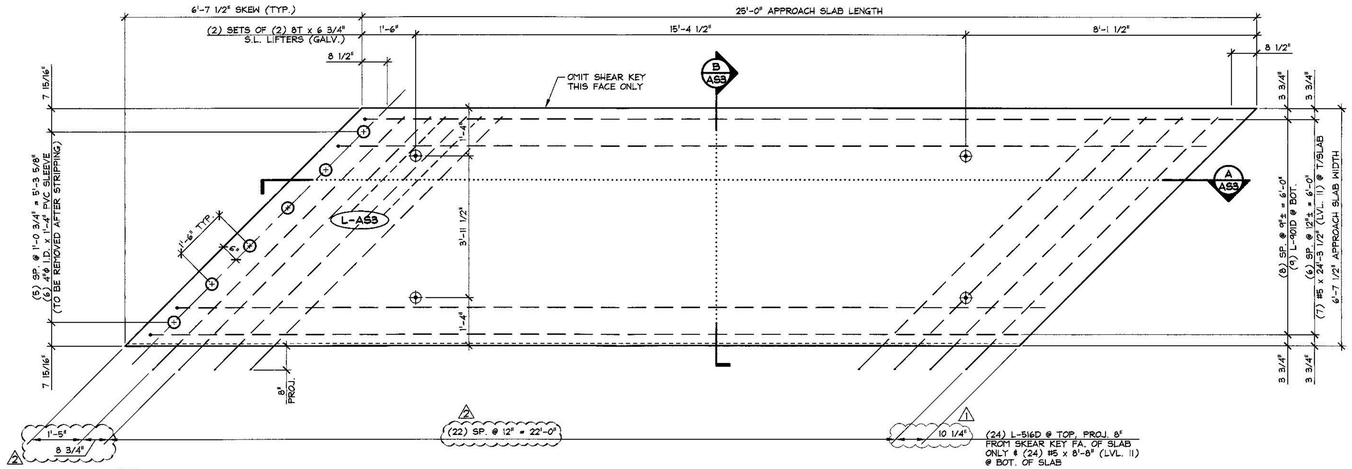


1 AS3 DIMENSIONAL PLAN VIEW IN FORM

1/2" = 1'-0"

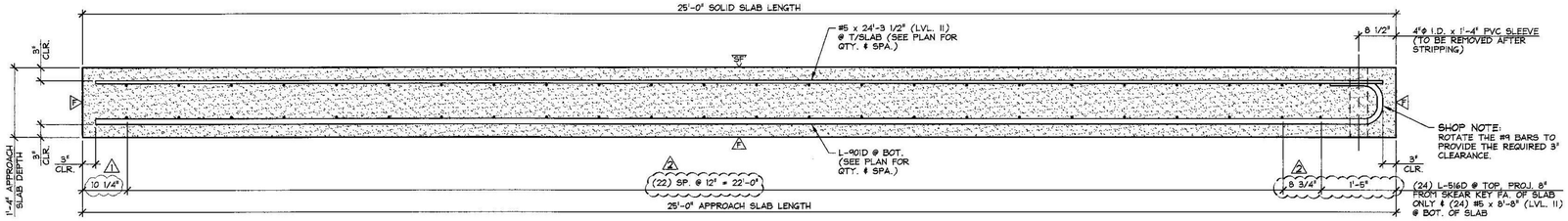


A AS3 LONGITUDINAL SECTION

3/4" = 1'-0"

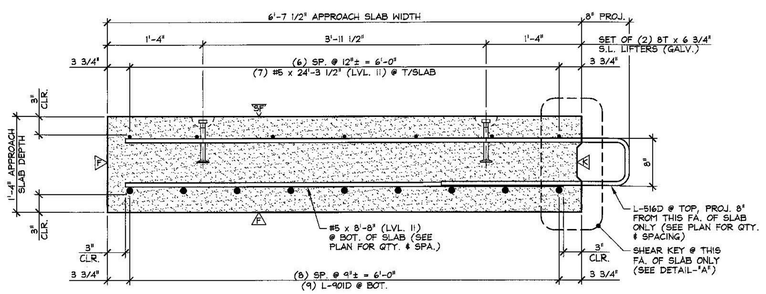


B AS3 LONGITUDINAL SECTION

1" = 1'-0"

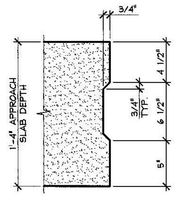


DETAIL - "A"

1 1/2" = 1'-0"

SUBMITTAL REVIEW

Review is only for general conformity to the contract drawings and specifications and shall not relieve the contractor of his entire responsibility under the contract, including among other things, dimensions to be confirmed and correlated at the job site, and information that pertains to the fabrication processes or to techniques of construction.

- [x] NO EXCEPTIONS TAKEN
- [ ] MAKE CORRECTIONS NOTED RESUBMITTAL NOT REQUIRED
- [ ] AMEND AND RESUBMIT
- [ ] REJECTED - SEE REMARKS

PB AMERICAS, INC.
BY: Ravi K. Jain
DATE: 5/12/2015

Vermont Agency of Transportation

RECEIVED
ON: May 12, 2015
and Checked for
CONFORMANCE
BY: Todd A. Sumner DATE: 05/13/2015

△ DENOTES FORM FINISH
△ DENOTES SMOOTH FLOAT FINISH
△ DENOTES ROUGHENED FINISH

**SHOP NOTE:**
f'c = 5,000 PSI
f'ci = 3,500 PSI
MIX #445MSCC

| MARK: L-AS3 | QTY.: 2 | WT.: 16.51 T | VOL.: 8.15 cy |
|---|---|---|---|

MATERIAL LIST / APPROACH SLAB

| ITEM | MARK | DESCRIPTION | QTY. |
|---|---|---|---|
| 1 | L-516D | #5 BENT BAR (LEVEL II, DUAL COATED) | 24 |
| 2 | | #5 x 8'-8" (LEVEL II, DUAL COATED) | 24 |
| 3 | | #5 x 24'-3 1/2" (LEVEL II, DUAL COATED) | 7 |
| 4 | | | |
| 5 | L-901D | #9 BENT BAR (LEVEL II, DUAL COATED) | 9 |
| 6 | | | |
| 7 | | | |
| 8 | | 4"ø I.D. x 1'-4" PVC SLEEVE | 6 |
| 9 | | 8T x 6 3/4" SNIFT LIFT LIFTER (GALV.) | 4 |
| 10 | | | |

△ 5-11-15 REVISED AS NOTED
△ 4-27-15 GENERAL REVISIONS

APPROVAL STAMP:

J.P. CARRARA & SONS INC.
Precast & Prestress Manufacturer
2464 CASE STR., MIDDLEBURY, VERMONT 05753 Phone:(802)388-6361 Fax:(802)388-9010

J.A. McDONALD, INC.
CONTRACTOR
LYNDON CENTER, VERMONT

STATE OF VERMONT AGENCY OF TRANSPORTATION
COUNTY OF ADDISON

TOWN OF LINCOLN
TH 1 (RURAL MAJOR COLLECTOR) OVER NEW HAVEN RIVER
BRIDGE NO.: 19 PROJECT NO.: BRF 0188 (8)

PRECAST APPROACH SLAB DETAILS

DATE: FEB. 6, 2015
SCALE: NOTED
CHKD: M.W. DFTM: B.L.
JOB NO: 23459-015
DWG. NO: AS3

F:\VT-Bridges\23459-15 Lincoln Bridge 19\23459-AS3.dwg, 5/11/2015 1:54:42 PM

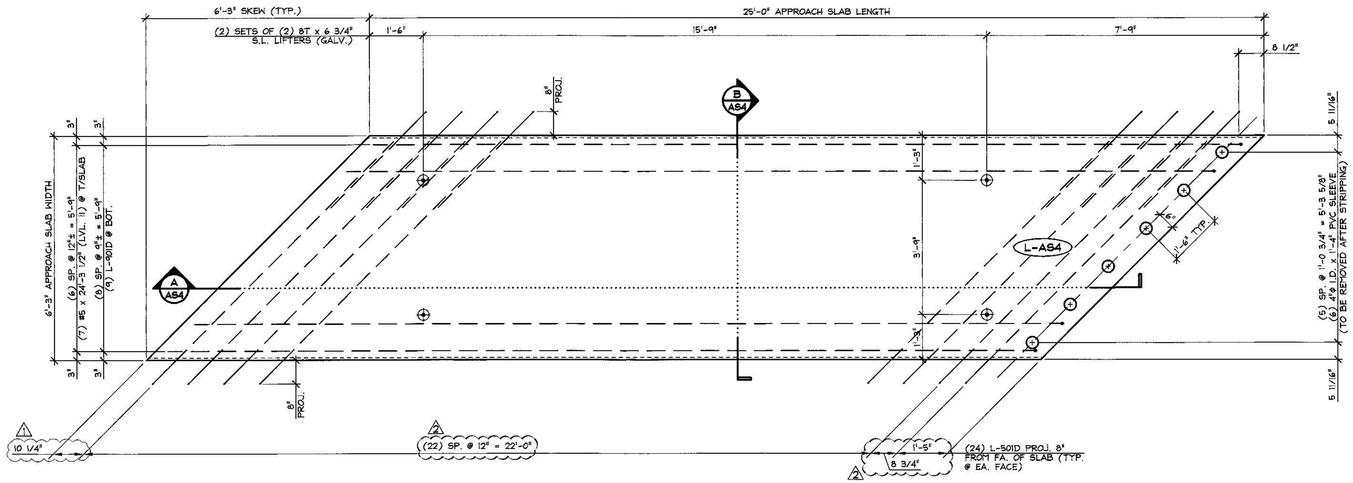


1 / AS4 DIMENSIONAL PLAN VIEW IN FORM
1/2" = 1'-0"

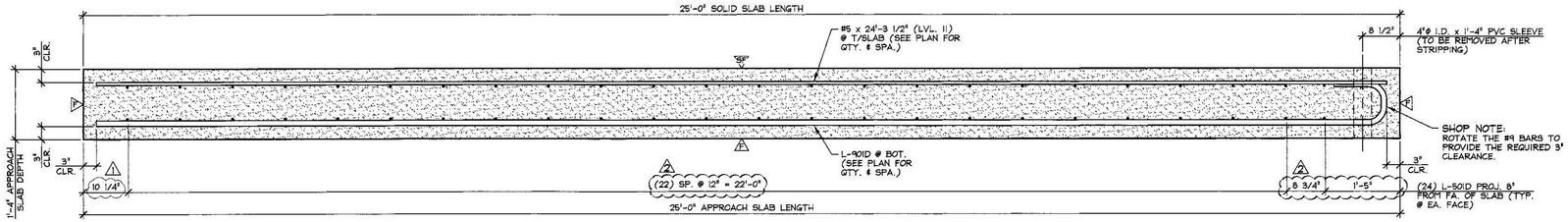


A / AS4 LONGITUDINAL SECTION
3/4" = 1'-0"

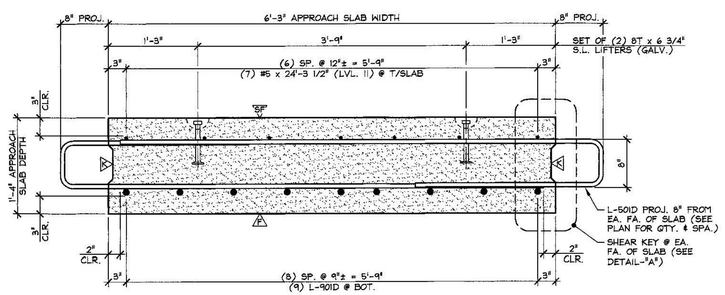


B / AS4 LONGITUDINAL SECTION
1" = 1'-0"

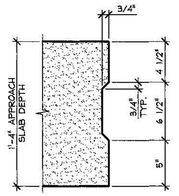


DETAIL - "A"
1 1/2" = 1'-0"

SUBMITTAL REVIEW

Review is only for general conformity to the contract drawings and specifications and shall not relieve the contractor of his entire responsibility under the contract, including among other things, dimensions to be confirmed and correlated at the job site, and information that pertains to the fabrication processes or to techniques of construction.

- ☑ NO EXCEPTIONS TAKEN
- ☐ MAKE CORRECTIONS NOTED
- ☐ RESUBMITTAL NOT REQUIRED
- ☐ AMEND AND RESUBMIT
- ☐ REJECTED - SEE REMARKS

PB AMERICAS, INC.
BY: Ray L. Hamm
DATE: 5/12/2015

Vermont Agency of Transportation
RECEIVED
ON: May 12, 2015
and Checked for
CONFORMANCE
BY: Todd A. Sumner DATE: 05/13/2015

△ DENOTES FORM FINISH
▱ DENOTES SMOOTH FLOAT FINISH
△ DENOTES ROUGHENED FINISH

SHOP NOTE:
f'c = 5,000 PSI
f'ci = 3,500 PSI
MIX #445MSCC

| MARK: L-AS4 | QTY.: 2 | WT.: 15.52 T | VOL.: 7.66 cy |
|---|---|---|---|

MATERIAL LIST / APPROACH SLAB

| ITEM | MARK | DESCRIPTION | QTY. |
|---|---|---|---|
| 1 | L-501D | #5 BENT BAR (LEVEL II, DUAL COATED) | 48 |
| 2 | | #5 x 24'-3 1/2" (LEVEL II, DUAL COATED) | 7 |
| 3 | | | |
| 4 | | | |
| 5 | L-901D | #9 BENT BAR (LEVEL II, DUAL COATED) | 9 |
| 6 | | | |
| 7 | | | |
| 8 | | 4"ø I.D. x 1'-4" PVC SLEEVE | 6 |
| 9 | | 8T x 6 3/4" SWIFT LIFT LIFTER (GALV.) | 4 |
| 10 | | | |

△ 5-11-15 REVISED AS NOTED
△ 4-27-15 GENERAL REVISIONS

APPROVAL STAMP:

J.P. CARRARA & SONS INC.
Precast & Prestress Manufacturer
2464 CASE STR., MIDDLEBURY, VERMONT 05753 Phone:(802)388-6361 Fax:(802)388-9010

J.A. McDONALD, INC.
CONTRACTOR
LYNDON CENTER, VERMONT

STATE OF VERMONT AGENCY OF TRANSPORTATION
COUNTY OF ADDISON

DATE: FEB. 6, 2015
SCALE: NOTED

TOWN OF LINCOLN
TH 1 (RURAL MAJOR COLLECTOR) OVER NEW HAVEN RIVER
BRIDGE NO.: 19 PROJECT NO.: BRF 0188 (8)

CHKD: M.W. DFTM: B.L.
JOB NO: 23459-015

PRECAST APPROACH SLAB DETAILS

DWG. NO: AS4

F:\VT-Bridges\23459-15 Lincoln Bridge 19\23459-AS4.dwg, 5/11/2015 1:58:14 PM

Vermont Agency of Transportation
RECEIVED
ON: May 12, 2015
and Checked for
CONFORMANCE
BY: Todd A. Sumner DATE: 05/13/2015

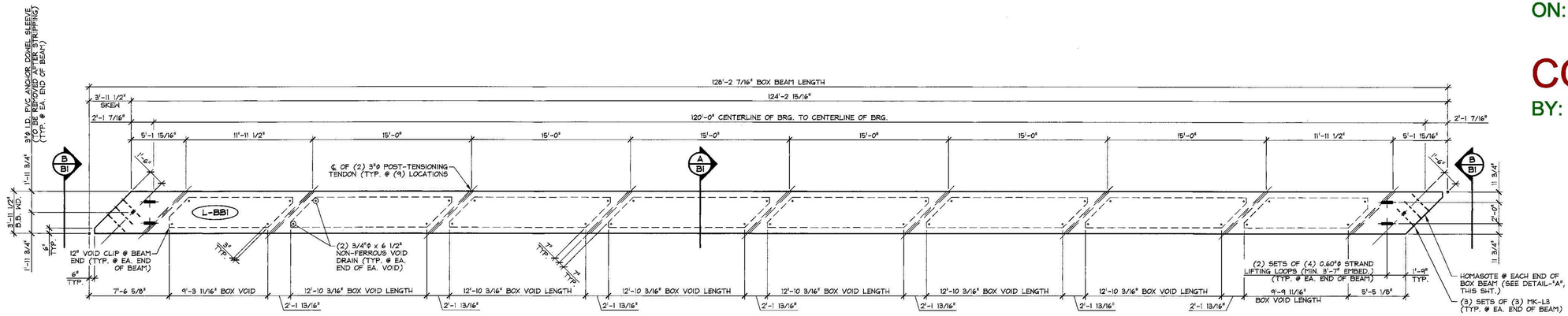


1/B1 DIMENSIONAL PLAN VIEW IN FORM
3/16" = 1'-0"

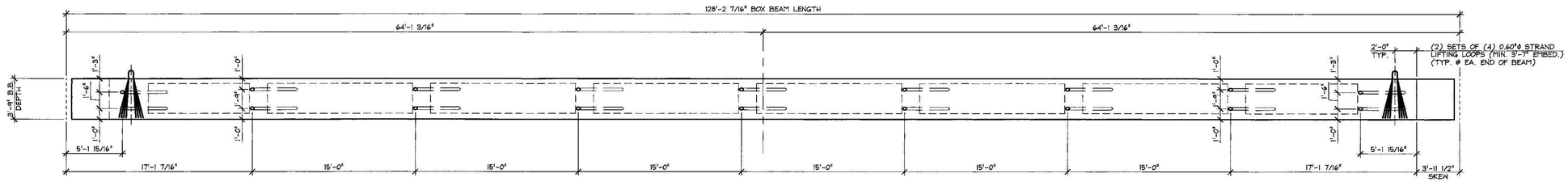


2/B1 DIMENSIONAL ELEVATION
3/16" = 1'-0"

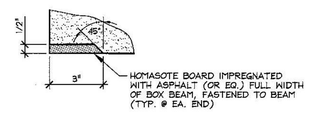


DETAIL - "A"
3" = 1'-0"

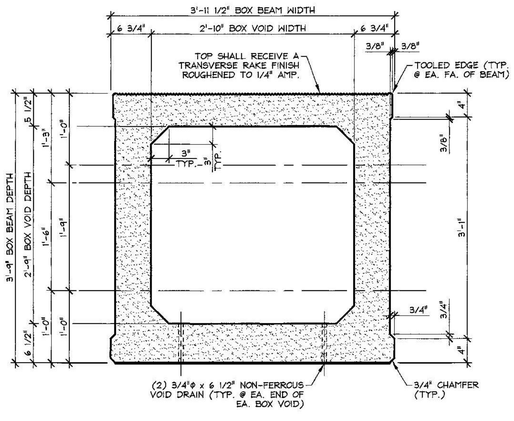


A/B1 DIMENSIONAL SECTION
1" = 1'-0"

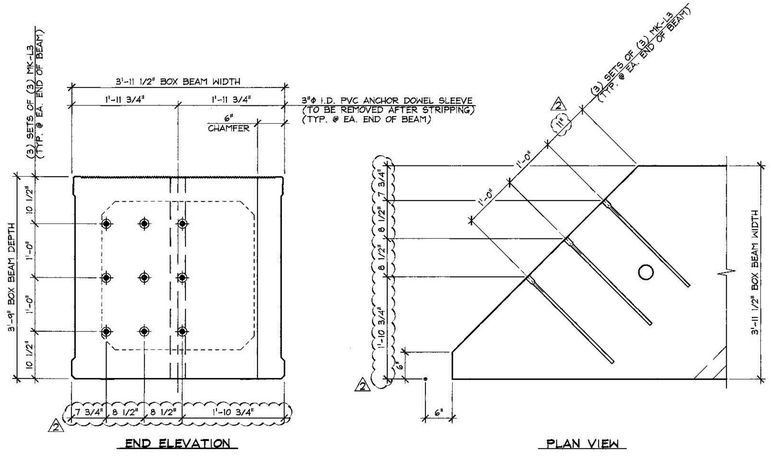


B/B1 BEAM END DETAILS
3/4" = 1'-0"

SUBMITTAL REVIEW

Review is only for general conformity to the contract drawings and specifications and shall not relieve the contractor of his entire responsibility under the contract, including among other things, dimensions to be confirmed and correlated at the job site, and information that pertains to the fabrication processes or to techniques of construction.

- [x] NO EXCEPTIONS TAKEN
- [ ] MAKE CORRECTIONS NOTED RESUBMITTAL NOT REQUIRED
- [ ] AMEND AND RESUBMIT
- [ ] REJECTED - SEE REMARKS

PB AMERICAS, INC.
BY: Ray L. Hilmer
DATE: 5/12/2015

SHOP NOTE:
f'c = 8,000 PSI
f'ci = 6,000 PSI
MIX #426M (NO DCI)

| MARK: L-BB1 | QTY.: 6 | WT.: 76.64 T | VOL.: 37.84 cy |
|---|---|---|---|

MATERIAL LIST / BOX BEAM

| ITEM | MARK | DESCRIPTION | QTY. |
|---|---|---|---|
| 1 | | | |
| 2 | | | |
| 3 | MK-L3 | DAYTON #5 x 2'-3" D-101-A STRAIGHT DOWEL BAR SPLICER (STAINLESS STEEL CLAD) | 18 |
| 4 | | | |
| 5 | | | |
| 6 | | 3/4"ø x 6 1/2" NON-FERROUS VOID DRAIN | 32 |
| 7 | | 2'-10" x 2'-9" x 9'-9 11/16" BOX VOID | 2 |
| 8 | | 2'-10" x 2'-9" x 12'-10 3/16" BOX VOID | 6 |
| 9 | | SET OF (4) 0.60"ø STRAND LIFTING LOOPS | 4 |
| 10 | | | |

△ 5-11-15 REVISED AS NOTED
△ 4-27-15 GENERAL REVISIONS

APPROVAL STAMP:

J.P. CARRARA & SONS INC.
Precast & Prestress Manufacturer
2464 CASE STR., MIDDLEBURY, VERMONT 05753 Phone:(802)388-6361 Fax:(802)388-9010

J.A. McDONALD, INC.
CONTRACTOR
LYNDON CENTER, VERMONT

STATE OF VERMONT AGENCY OF TRANSPORTATION
COUNTY OF ADDISON

TOWN OF LINCOLN
TH 1 (RURAL MAJOR COLLECTOR) OVER NEW HAVEN RIVER
BRIDGE NO.: 19 PROJECT NO.: BRF 0188 (8)

PRESTRESSED BOX BEAM DIMENSIONAL DETAILS

DATE: FEB. 6, 2015
SCALE: NOTED
CHKD: M.W. DFTM: B.L.
JOB NO: 23459-015
DWG. NO: B1

F:\VT-Bridges\23459-15 Lincoln Bridge 19\23459-B1.dwg, 5/11/2015 2:23:45 PM

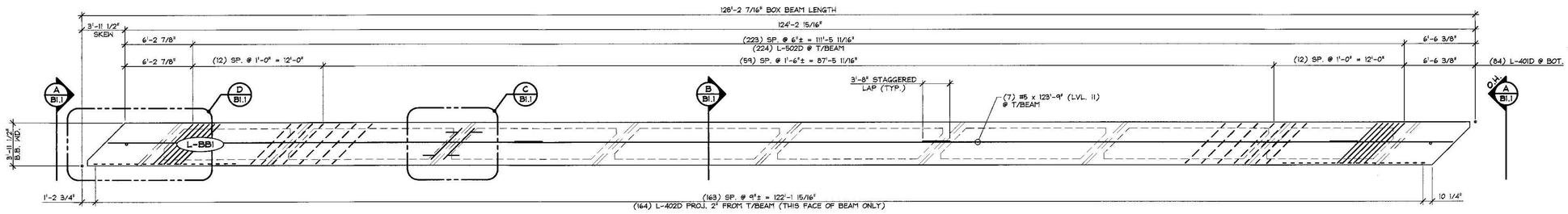


1 / B1.1 DIMENSIONAL PLAN VIEW IN FORM
3/16" = 1'-0"

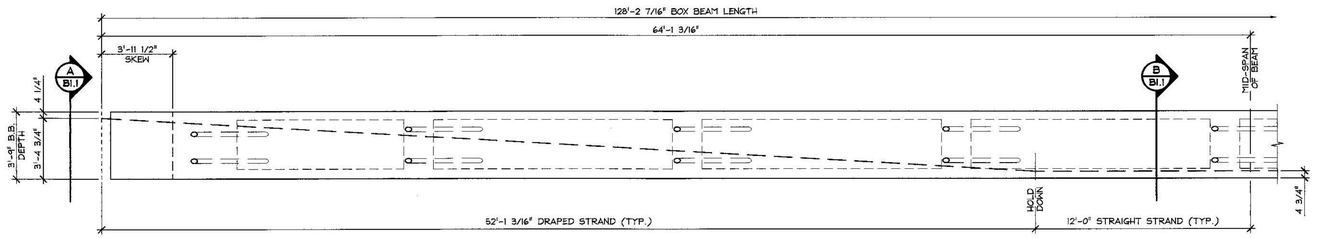


2 / B1.1 PARTAIL DRAPED STRAND ELEVATION
1/4" = 1'-0"

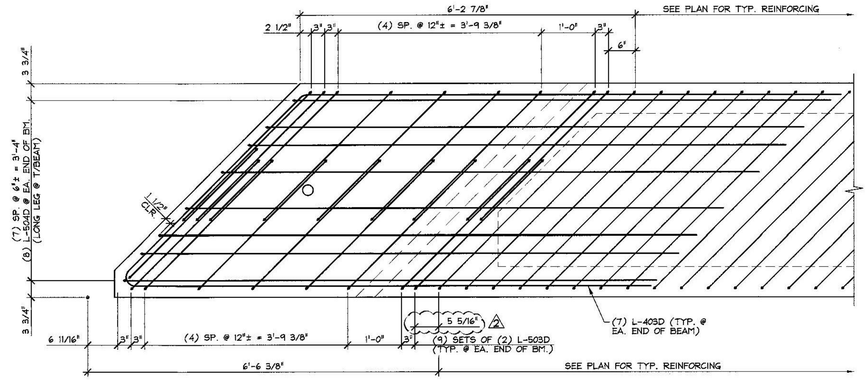


D / B1.1 END BLOCK REINFORCING PLAN
LONGITUDINAL REINFORCING & COMPOSITE REINFORCING NOT SHOWN FOR CLARITY
3/4" = 1'-0"

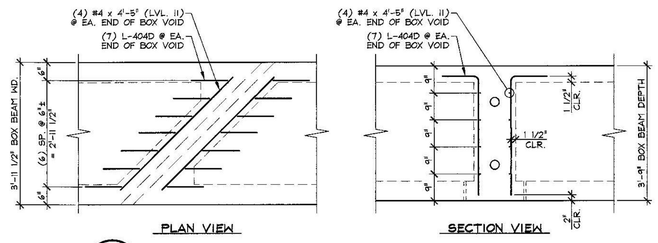


C / B1.1 DIAPHRAGM REINFORCING DETAILS
1/2" = 1'-0"

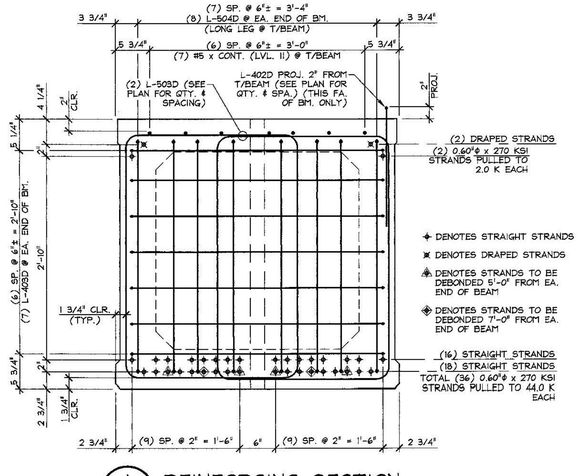


A / B1.1 REINFORCING SECTION @ BEAM END
1" = 1'-0"

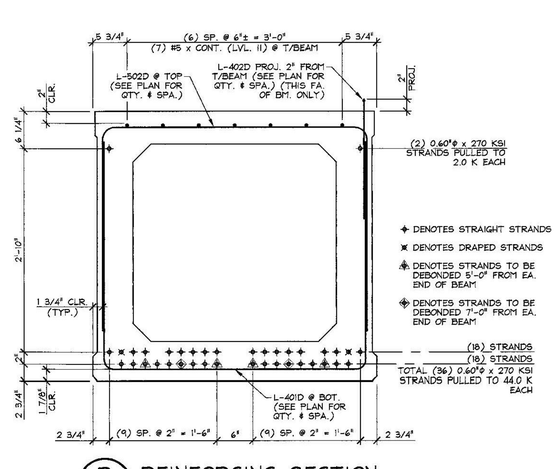


B / B1.1 REINFORCING SECTION @ MID-SPAN
1" = 1'-0"

1. DETENSION STRANDS 1 THRU 4 BY CUTTING STRANDS AT BULKHEADS AND IN BETWEEN BEAMS.
2. DETENSION DRAPED STRANDS 5 AND 6 BY CUTTING STRANDS AT BULKHEADS AND IN BETWEEN BEAMS.
3. RELEASE HOLD DOWN PINS BY CUTTING COIL ROD JUST ABOVE "RABBIT".
4. DETENSION STRANDS 7 THRU 38 (IN SEQUENCE) BY CUTTING STRANDS AT BULK HEADS AND IN BETWEEN BEAMS.
5. CUTTING OF STRANDS IS ACCOMPLISHED BY GRADUALLY HEATING STRANDS AND THEN BURNING THROUGH THEM USING A TORCH.

DETENSIONING SCHEDULE
N.T.S.

| MARK: L-BB1 | QTY.: 6 |
|---|---|

MATERIAL LIST / BOX BEAM

| ITEM | MARK | DESCRIPTION | QTY. |
|---|---|---|---|
| 1 | L-401D | #4 BENT BAR (LEVEL II, DUAL COATED) | 84 |
| 2 | L-402D | #4 HAIRPIN (LEVEL II, DUAL COATED) | 164 |
| 3 | L-403D | #4 BENT BAR (LEVEL II, DUAL COATED) | 14 |
| 4 | L-404D | #4 BENT BAR (LEVEL II, DUAL COATED) | 112 |
| 5 | | #4 x 4'-5" (LEVEL II, DUAL COATED) | 64 |
| 6 | | | |
| 7 | | | |
| 8 | | | |
| 9 | L-502D | #5 BENT BAR (LEVEL II, DUAL COATED) | 224 |
| 10 | L-503D | #5 BENT BAR (LEVEL II, DUAL COATED) | 36 |
| 11 | L-504D | #5 BENT BAR (LEVEL II, DUAL COATED) | 16 |
| 12 | | #5 x 123'-9" (LEVEL II, DUAL COATED) W/ (3) 3'-8" STAG. LAPS | 7 |
| 13 | | | |
| 14 | | | |
| 15 | | | |

Vermont Agency of Transportation
RECEIVED
ON: May 12, 2015
and Checked for
CONFORMANCE
BY: Todd A. Sumner DATE: 05/13/2015

SUBMITTAL REVIEW
Review is only for general conformity to the contract drawings and specifications and shall not relieve the contractor of his entire responsibility under the contract, including among other things, dimensions to be confirmed and correlated at the job site, and information that pertains to the fabrication processes or to techniques of construction.
☑ NO EXCEPTIONS TAKEN
☐ MAKE CORRECTIONS NOTED RESUBMITTAL NOT REQUIRED
☐ AMEND AND RESUBMIT
☐ REJECTED - SEE REMARKS
BY: PB AMERICAS, INC. Ray K. Hamm
DATE: 5/12/2015

2 5-11-15 REVISED AS NOTED
1 4-27-15 GENERAL REVISIONS

APPROVAL STAMP:

J.P. CARRARA & SONS INC.
Precast & Prestress Manufacturer
2464 OSE STR., MIDDLEBURY, VERMONT 05753 Phone:(802)388-6361 Fax:(802)388-9010

J.A. McDONALD, INC.
CONTRACTOR
LYNDON CENTER, VERMONT

STATE OF VERMONT AGENCY OF TRANSPORTATION
COUNTY OF ADDISON

DATE: FEB. 6, 2015
SCALE: NOTED

TOWN OF LINCOLN
TH 1 (RURAL MAJOR COLLECTOR) OVER NEW HAVEN RIVER
BRIDGE NO.: 19 PROJECT NO.: BRF 0188 (8)

CHKD: M.W. DFTM: B.L.
JOB NO: 23459-015

PRESTRESSED BOX BEAM REINFORCING DETAILS

DWG. NO: B1.1

F:\VT-Bridges\23459-15 Lincoln Bridge 19\23459-B1-1.dwg, 5/11/2015 2:41:19 PM

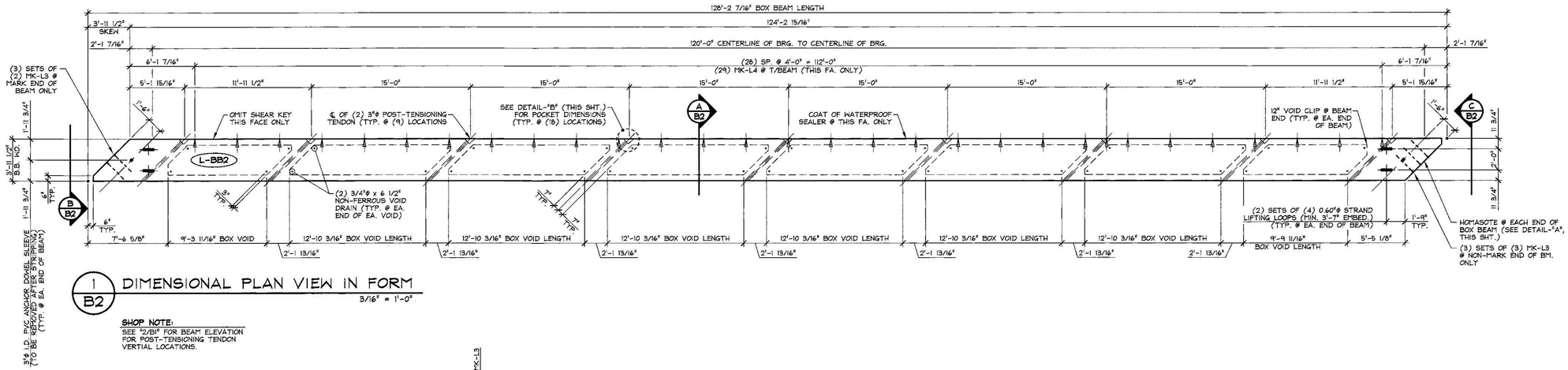


1/B2 DIMENSIONAL PLAN VIEW IN FORM
3/16" = 1'-0"

**SHOP NOTE:**
SEE 7/B1 FOR BEAM ELEVATION FOR POST-TENSIONING TENDON VERTIAL LOCATIONS.

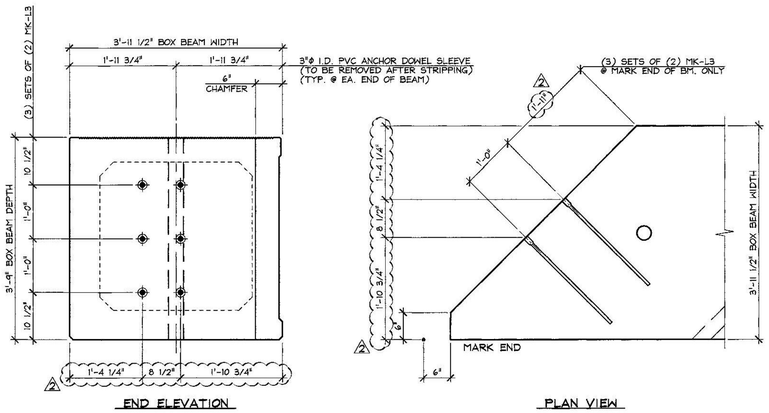


B/B2 BEAM END DETAILS
3/4" = 1'-0"

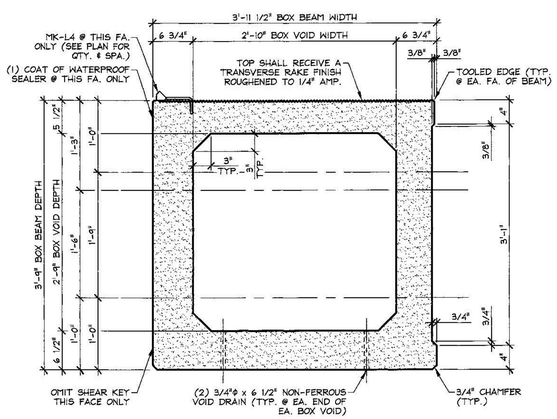


A/B2 DIMENSIONAL SECTION
1" = 1'-0"

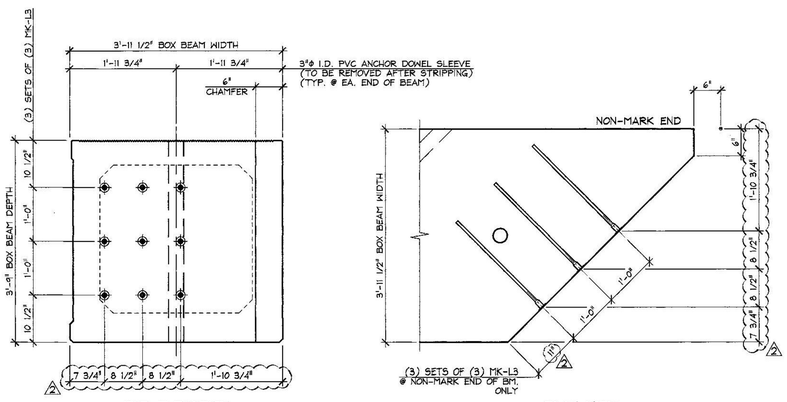


C/B2 BEAM END DETAILS
3/4" = 1'-0"

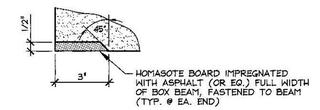


DETAIL - "A"
3" = 1'-0"

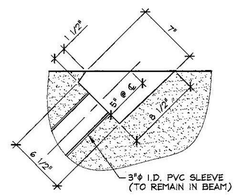


DETAIL - "B"
1 1/2" = 1'-0"

**SHOP NOTE:**
f'c = 8,000 PSI
f'ci = 6,000 PSI
MIX #426M (NO DCI)

| MARK: L-BB2 | QTY.: 1 | WT.: 78.51 T | VOL.: 38.77 cy |
|---|---|---|---|

MATERIAL LIST / BOX BEAM

| ITEM | MARK | DESCRIPTION | QTY. |
|---|---|---|---|
| 1 | | | |
| 2 | | | |
| 3 | MK-L3 | DAYTON #5 x 2'-3" D-101-A STRAIGHT DOWEL BAR SPLICER (STAINLESS STEEL CLAD) | 15 |
| 4 | MK-L4 | DAYTON C-24 TYPE 4-APR DECK FORM HANGER (GALV.) | 29 |
| 5 | | | |
| 6 | | 3/4"ϕ x 6 1/2" NON-FERROUS VOID DRAIN | 32 |
| 7 | | 2'-10" x 2'-9" x 9'-9 11/16" BOX VOID | 2 |
| 8 | | 2'-10" x 2'-9" x 12'-10 3/16" BOX VOID | 6 |
| 9 | | SET OF (4) 0.60"ϕ STRAND LIFTING LOOPS | 4 |
| 10 | | | |

SUBMITTAL REVIEW

Review is only for general conformity to the contract drawings and specifications and shall not relieve the contractor of his entire responsibility under the contract, including among other things, dimensions to be confirmed and correlated at the job site, and information that pertains to the fabrication processes or to techniques of construction.

- ☑ NO EXCEPTIONS TAKEN
- ☐ MAKE CORRECTIONS NOTED RESUBMITTAL NOT REQUIRED
- ☐ AMEND AND RESUBMIT
- ☐ REJECTED - SEE REMARKS

PB AMERICAS, INC.
BY: Ray L. Gibbons
DATE: 5/12/2015

2 5-11-15 REVISED AS NOTED
1 4-27-15 GENERAL REVISIONS

APPROVAL STAMP:

J.P. CARRARA & SONS INC.
Precast & Prestress Manufacturer
2464 DASE STR., MIDDLEBURY, VERMONT 05753 Phone:(802)388-6361 Fax:(802)388-9010

J.A. McDONALD, INC.
CONTRACTOR
LYNDON CENTER, VERMONT

STATE OF VERMONT AGENCY OF TRANSPORTATION
COUNTY OF ADDISON

DATE: FEB. 6, 2015
SCALE: NOTED
CHKD: M.W. DFTM: B.L.
JOB NO: 23459-015

TOWN OF LINCOLN
TH 1 (RURAL MAJOR COLLECTOR) OVER NEW HAVEN RIVER
BRIDGE NO.: 19 PROJECT NO.: BRF 0188 (8)

PRESTRESSED BOX BEAM DIMENSIONAL DETAILS

DWG. NO: B2

Vermont Agency of Transportation
RECEIVED
ON: May 12, 2015
and Checked for
CONFORMANCE
BY: Todd A. Sumner DATE: 05/13/2015

F:\VT-Bridges\23459-15 Lincoln Bridge 19\23459-B2.dwg, 5/11/2015 2:46:44 PM

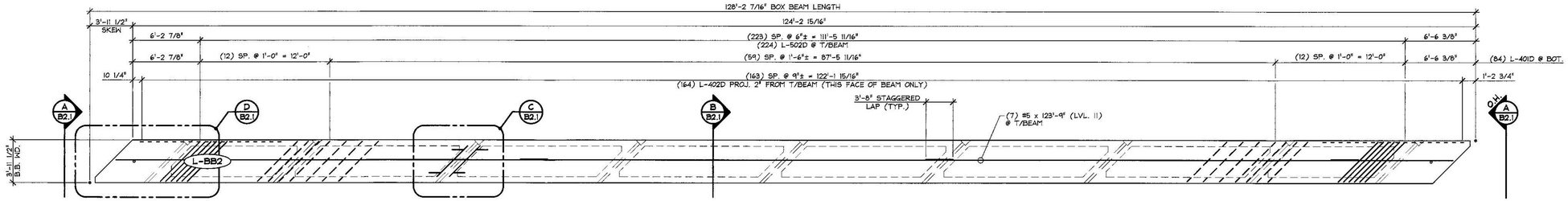


1 B2.1 DIMENSIONAL PLAN VIEW IN FORM
3/16" = 1'-0"

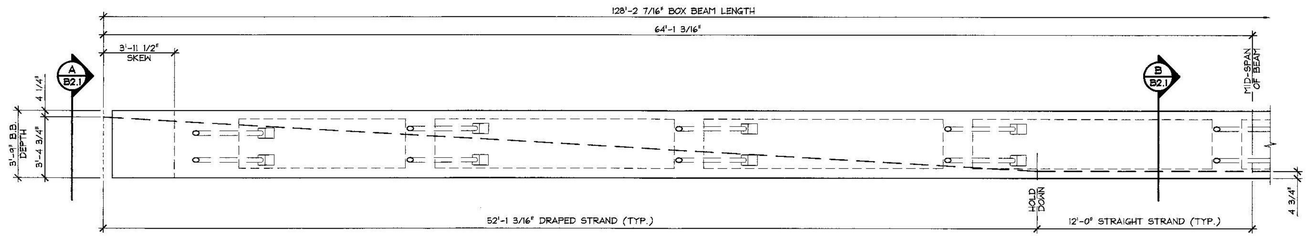


2 B2.1 PARTAIL DRAPED STRAND ELEVATION
1/4" = 1'-0"

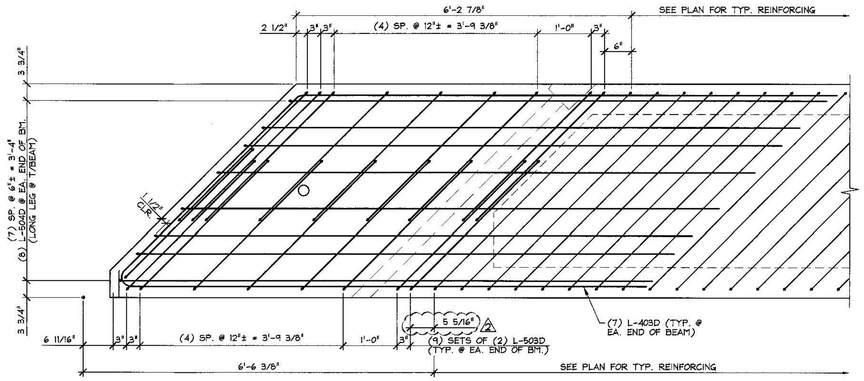


D B2.1 END BLOCK REINFORCING PLAN
LONGITUDINAL REINFORCING & COMPOSITE REINFORCING NOT SHOWN FOR CLARITY
3/4" = 1'-0"

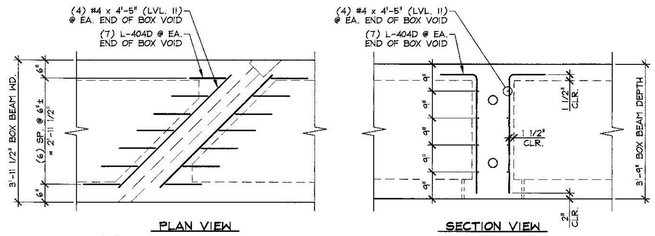


C B2.1 DIAPHRAGM REINFORCING DETAILS
1/2" = 1'-0"

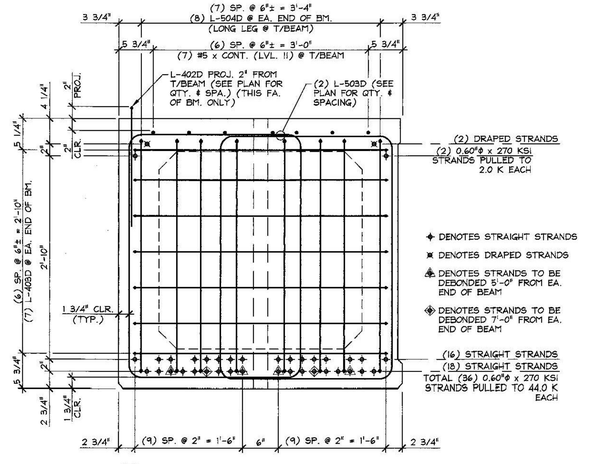


A B2.1 REINFORCING SECTION @ BEAM END
1" = 1'-0"

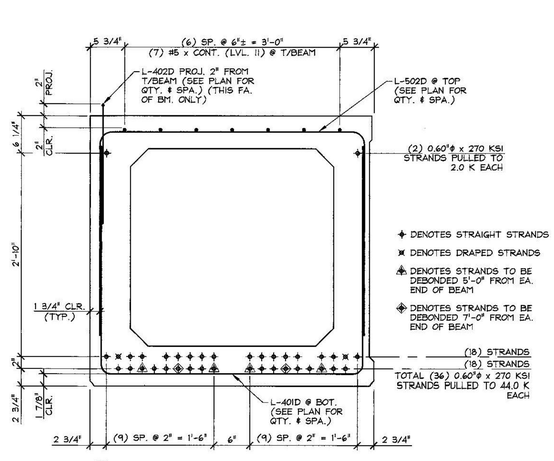


B B2.1 REINFORCING SECTION @ MID-SPAN
1" = 1'-0"

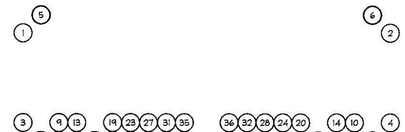


1. DETENSION STRANDS 1 THRU 4 BY CUTTING STRANDS AT BULKHEADS AND IN BETWEEN BEAMS.
2. DETENSION DRAPED STRANDS 5 AND 6 BY CUTTING STRANDS AT BULKHEADS AND IN BETWEEN BEAMS.
3. RELEASE HOLD DOWN PINS BY CUTTING COIL ROD JUST ABOVE "RABBIT".
4. DETENSION STRANDS 7 THRU 38 (IN SEQUENCE) BY CUTTING STRANDS AT BULK HEADS AND IN BETWEEN BEAMS.
5. CUTTING OF STRANDS IS ACCOMPLISHED BY GRADUALLY HEATING STRANDS AND THEN BURNING THROUGH THEM USING A TORCH.

DETENSIONING SCHEDULE
N.T.S.

| MARK: L-BB2 | QTY.: 1 | | |
|---|---|---|---|
| MATERIAL LIST / BOX BEAM | | | |
| ITEM | MARK | DESCRIPTION | QTY. |
| 1 | L-401D | #4 BENT BAR (LEVEL II, DUAL COATED) | 84 |
| 2 | L-402D | #4 HAIRPIN (LEVEL II, DUAL COATED) | 164 |
| 3 | L-403D | #4 BENT BAR (LEVEL II, DUAL COATED) | 14 |
| 4 | L-404D | #4 BENT BAR (LEVEL II, DUAL COATED) | 112 |
| 5 | | #4 x 4'-5" (LEVEL II, DUAL COATED) | 64 |
| 6 | | | |
| 7 | | | |
| 8 | | | |
| 9 | L-502D | #5 BENT BAR (LEVEL II, DUAL COATED) | 224 |
| 10 | L-503D | #5 BENT BAR (LEVEL II, DUAL COATED) | 36 |
| 11 | L-504D | #5 BENT BAR (LEVEL II, DUAL COATED) | 16 |
| 12 | | #5 x 123'-9" (LEVEL II, DUAL COATED) W/ (3) 3'-8" STAG. LAPS | 7 |
| 13 | | | |
| 14 | | | |
| 15 | | | |

Vermont Agency of Transportation
RECEIVED
ON: May 12, 2015
and Checked for
CONFORMANCE
BY: Todd A. Sumner DATE: 05/13/2015

SUBMITTAL REVIEW
Review is only for general conformity to the contract drawings and specifications and shall not relieve the contractor of his entire responsibility under the contract, including among other things, dimensions to be confirmed and correlated at the job site, and information that pertains to the fabrication processes or to techniques of construction.
☑ NO EXCEPTIONS TAKEN
☐ MAKE CORRECTIONS NOTED RESUBMITTAL NOT REQUIRED
☐ AMEND AND RESUBMIT
☐ REJECTED - SEE REMARKS
PB AMERICAS, INC.
BY: Ray-L-Jones
DATE: 5/12/2015

⚠2 5-11-15 REVISED AS NOTED
⚠1 4-27-15 GENERAL REVISIONS

APPROVAL STAMP:

J.P. CARRARA & SONS INC.
Precast & Prestress Manufacturer
2464 CASE ST., MIDDLEBURY, VERMONT 05753 Phone:(802)388-6361 Fax:(802)388-9010
J.A. McDONALD, INC.
CONTRACTOR
LYNDON CENTER, VERMONT

STATE OF VERMONT AGENCY OF TRANSPORTATION
COUNTY OF ADDISON
DATE: FEB. 6, 2015
SCALE: NOTED

TOWN OF LINCOLN
TH 1 (RURAL MAJOR COLLECTOR) OVER NEW HAVEN RIVER
BRIDGE NO.: 19 PROJECT NO.: BRF 0188 (8)
CHKD: M.A. DFTM: B.L.
JOB NO: 23459-015

PRESTRESSED BOX BEAM REINFORCING DETAILS
DWG. NO: B2.1

F:\VT-Bridges\23459-15 Lincoln Bridge 19\23459-B2-1.dwg, 5/11/2015 2:52:22 PM

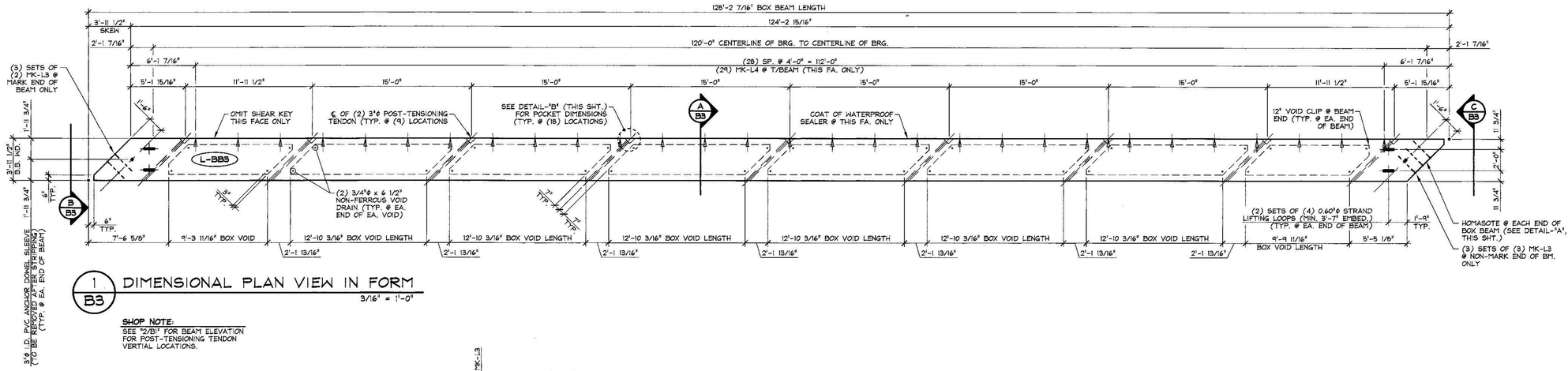


1/B3 DIMENSIONAL PLAN VIEW IN FORM
3/16" = 1'-0"

**SHOP NOTE:**
SEE "2/B1" FOR BEAM ELEVATION FOR POST-TENSIONING TENDON VERTICAL LOCATIONS.

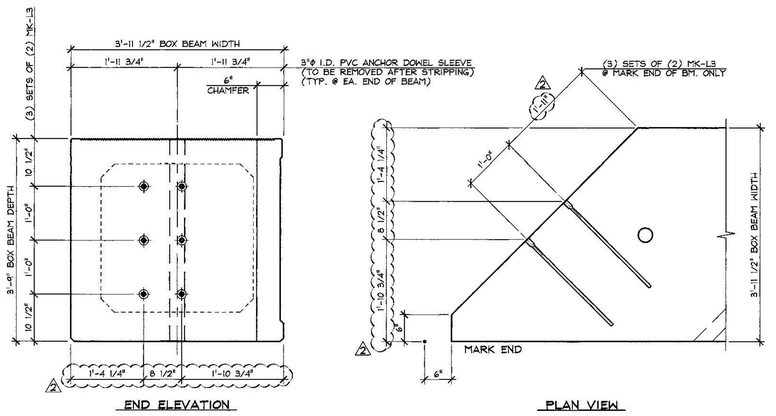


B/B3 BEAM END DETAILS
3/4" = 1'-0"

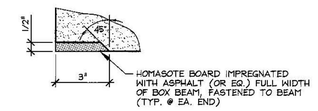


DETAIL - "A"
3" = 1'-0"

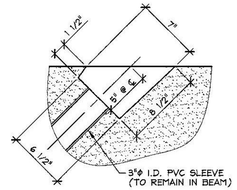


DETAIL - "B"
1 1/2" = 1'-0"

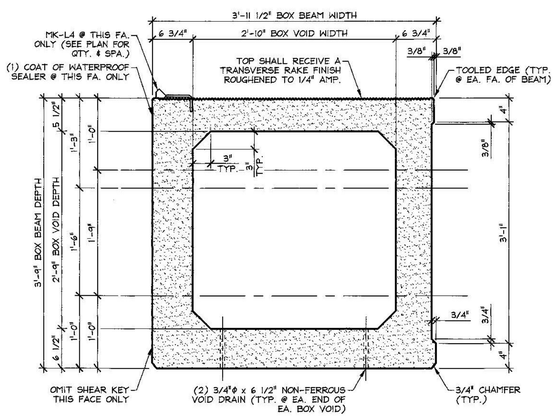


A/B3 DIMENSIONAL SECTION
1" = 1'-0"

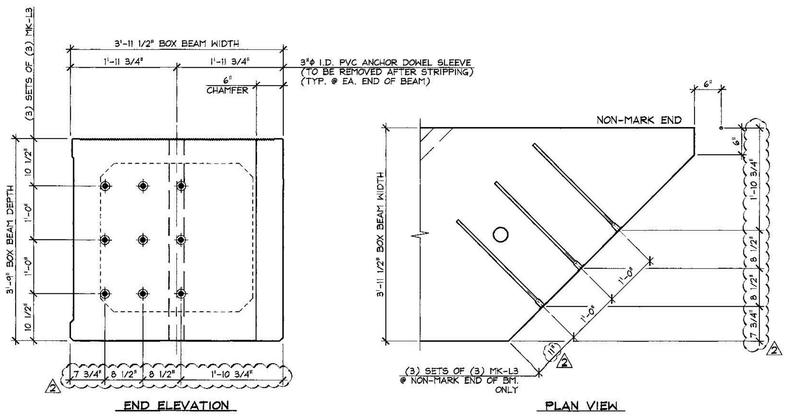


C/B3 BEAM END DETAILS
3/4" = 1'-0"

**SHOP NOTE:**
f'c = 8,000 PSI
f'ci = 6,000 PSI
MIX #426M (NO DCI)

| MARK: L-BB3 | QTY.: 1 | WT.: 78.51 T | VOL.: 38.77 cy |
|---|---|---|---|

MATERIAL LIST / BOX BEAM

| ITEM | MARK | DESCRIPTION | QTY. |
|---|---|---|---|
| 1 | | | |
| 2 | | | |
| 3 | MK-L3 | DAYTON #5 x 2'-3" D-101-A STRAIGHT DOWEL BAR SPLICER (STAINLESS STEEL CLAD) | 15 |
| 4 | MK-L4 | DAYTON C-24 TYPE 4-APR DECK FORM HANGER (GALV.) | 29 |
| 5 | | | |
| 6 | | 3/4"ϕ x 6 1/2" NON-FERROUS VOID DRAIN | 32 |
| 7 | | 2'-10" x 2'-9" x 9'-9 11/16" BOX VOID | 2 |
| 8 | | 2'-10" x 2'-9" x 12'-10 3/16" BOX VOID | 6 |
| 9 | | SET OF (4) 0.60"ϕ STRAND LIFTING LOOPS | 4 |
| 10 | | | |

SUBMITTAL REVIEW

Review is only for general conformity to the contract drawings and specifications and shall not relieve the contractor of his entire responsibility under the contract, including among other things, dimensions to be confirmed and correlated at the job site, and information that pertains to the fabrication processes or to techniques of construction.

- [x] NO EXCEPTIONS TAKEN
- [ ] MAKE CORRECTIONS NOTED
- [ ] RESUBMITTAL NOT REQUIRED
- [ ] AMEND AND RESUBMIT
- [ ] REJECTED - SEE REMARKS

BY: PB AMERICAS, INC. Ray K. Flores
DATE: 5/12/2015

△2 5-11-15 REVISED AS NOTED
△1 4-27-15 GENERAL REVISIONS

APPROVAL STAMP:

J.P. CARRARA & SONS INC.
Precast & Prestress Manufacturer
2464 CASE STR., MIDDLEBURY, VERMONT 05753 Phone:(802)388-6361 Fax:(802)388-9010

J.A. McDONALD, INC.
CONTRACTOR
LYNDON CENTER, VERMONT

STATE OF VERMONT AGENCY OF TRANSPORTATION
COUNTY OF ADDISON

DATE: FEB. 6, 2015
SCALE: NOTED

TOWN OF LINCOLN
TH 1 (RURAL MAJOR COLLECTOR) OVER NEW HAVEN RIVER
BRIDGE NO.: 19 PROJECT NO.: BRF 0188 (8)

CHKD: M.W. DFTM: B.L.
JOB NO: 23459-015

PRESTRESSED BOX BEAM DIMENSIONAL DETAILS

DWG. NO: B3

Vermont Agency of Transportation
RECEIVED
ON: May 12, 2015
and Checked for
CONFORMANCE
BY: Todd A. Sumner DATE: 05/13/2015

F:\VT-Bridges\23459-15 Lincoln Bridge 19\23459-B3.dwg, 5/11/2015 2:53:28 PM

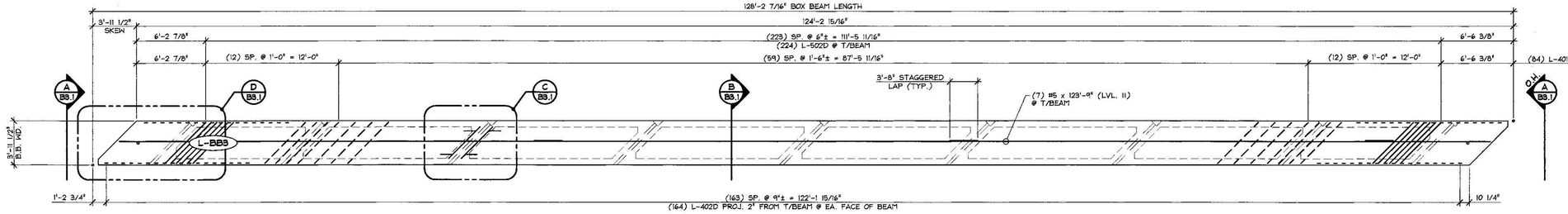


1 B3.1 DIMENSIONAL PLAN VIEW IN FORM
3/16" = 1'-0"

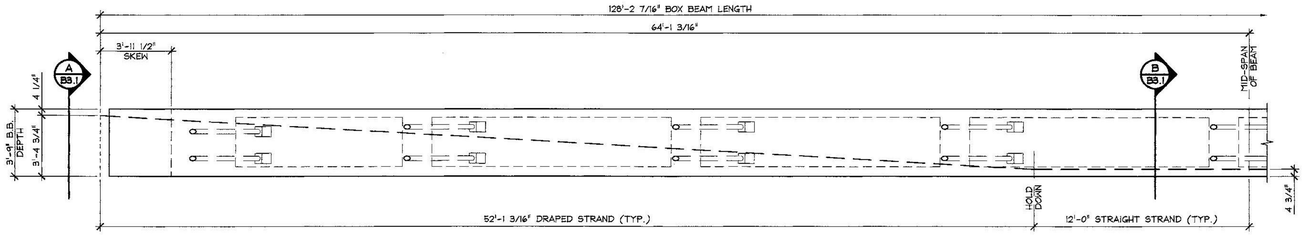


2 B3.1 PARTAIL DRAPED STRAND ELEVATION
1/4" = 1'-0"

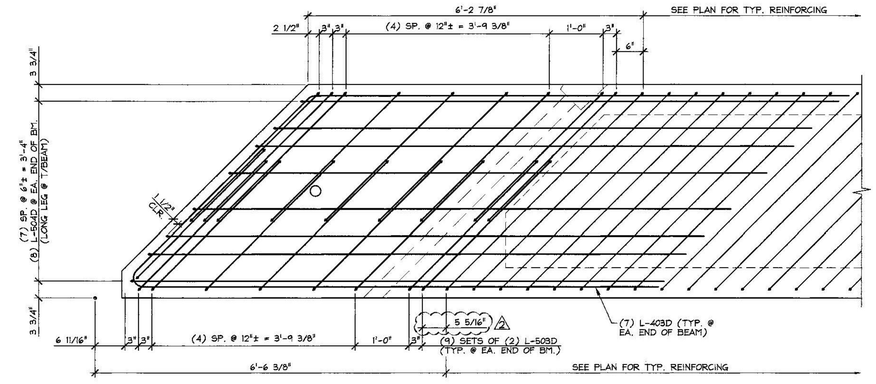


D B3.1 END BLOCK REINFORCING PLAN
LONGITUDINAL REINFORCING & COMPOSITE REINFORCING NOT SHOWN FOR CLARITY
3/4" = 1'-0"

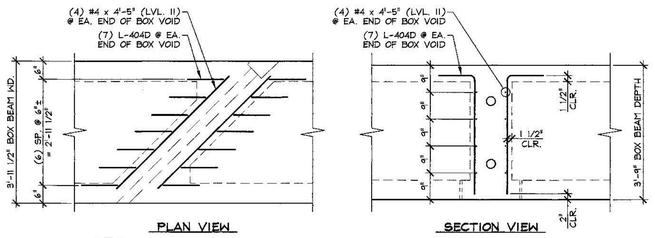


C B3.1 DIAPHRAGM REINFORCING DETAILS
1/2" = 1'-0"

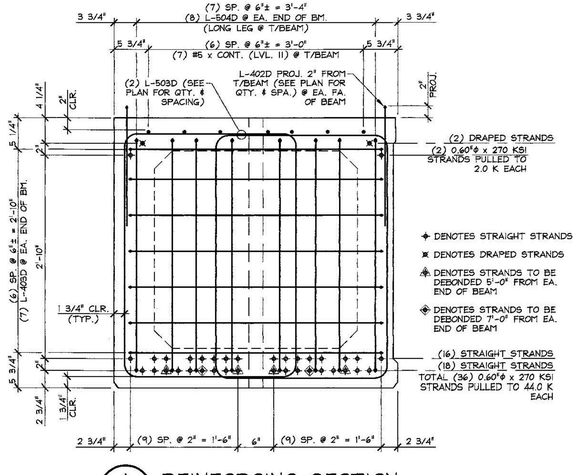


A B3.1 REINFORCING SECTION @ BEAM END
1" = 1'-0"

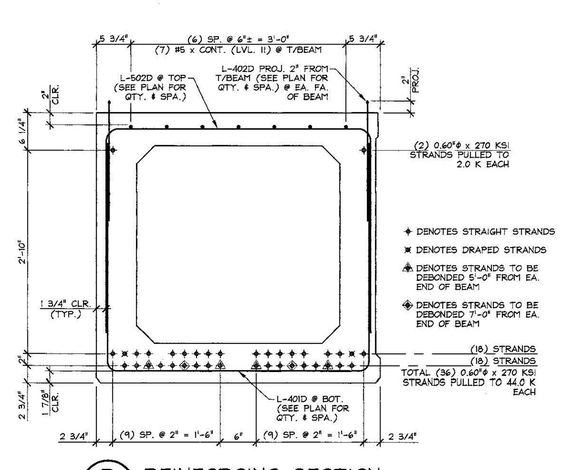


B B3.1 REINFORCING SECTION @ MID-SPAN
1" = 1'-0"

1. DETENSION STRANDS 1 THRU 4 BY CUTTING STRANDS AT BULKHEADS AND IN BETWEEN BEAMS.
2. DETENSION DRAPED STRANDS 5 AND 6 BY CUTTING STRANDS AT BULKHEADS AND IN BETWEEN BEAMS.
3. RELEASE HOLD DOWN PINS BY CUTTING COIL ROD JUST ABOVE "RABBIT".
4. DETENSION STRANDS 7 THRU 38 (IN SEQUENCE) BY CUTTING STRANDS AT BULK HEADS AND IN BETWEEN BEAMS.
5. CUTTING OF STRANDS IS ACCOMPLISHED BY GRADUALLY HEATING STRANDS AND THEN BURNING THROUGH THEM USING A TORCH.

## DETENSIONING SCHEDULE
N.T.S.

| MARK: L-BB3 | QTY.: 1 |
|---|---|

MATERIAL LIST / BOX BEAM

| ITEM | MARK | DESCRIPTION | QTY. |
|---|---|---|---|
| 1 | L-401D | #4 BENT BAR (LEVEL II, DUAL COATED) | 84 |
| 2 | L-402D | #4 HAIRPIN (LEVEL II, DUAL COATED) | 328 |
| 3 | L-403D | #4 BENT BAR (LEVEL II, DUAL COATED) | 14 |
| 4 | L-404D | #4 BENT BAR (LEVEL II, DUAL COATED) | 112 |
| 5 | | #4 x 4'-5" (LEVEL II, DUAL COATED) | 64 |
| 6 | | | |
| 7 | | | |
| 8 | | | |
| 9 | L-502D | #5 BENT BAR (LEVEL II, DUAL COATED) | 224 |
| 10 | L-503D | #5 BENT BAR (LEVEL II, DUAL COATED) | 36 |
| 11 | L-504D | #5 BENT BAR (LEVEL II, DUAL COATED) | 16 |
| 12 | | #5 x 123'-9" (LEVEL II, DUAL COATED) W/ (3) 3'-8" STAG. LAPS | 7 |
| 13 | | | |
| 14 | | | |
| 15 | | | |

SUBMITTAL REVIEW

Review is only for general conformity to the contract drawings and specifications and shall not relieve the contractor of his entire responsibility under the contract, including among other things, dimensions to be confirmed and correlated at the job site, and information that pertains to the fabrication processes or to techniques of construction.

- [x] NO EXCEPTIONS TAKEN
- [ ] MAKE CORRECTIONS NOTED RESUBMITTAL NOT REQUIRED
- [ ] AMEND AND RESUBMIT
- [ ] REJECTED - SEE REMARKS

PB AMERICAS, INC.
BY: Ray L. Kown
DATE: 5/12/2015

Vermont Agency of Transportation
2015-05-13 (Work RFF 0188(8) Final)_C_approved.pdf
RECEIVED
ON: May 12, 2015
and Checked for
CONFORMANCE
BY: Todd A. Sumner DATE: 05/13/2015

△2 5-11-15 REVISED AS NOTED
△1 4-27-15 GENERAL REVISIONS

APPROVAL STAMP:

J.P. CARRARA & SONS INC.
Precast & Prestress Manufacturer
3464 CASE STR., MIDDLEBURY, VERMONT 05753 Phone:(802)388-6361 Fax:(802)388-9010

J.A. McDONALD, INC.
CONTRACTOR
LYNDON CENTER, VERMONT

STATE OF VERMONT AGENCY OF TRANSPORTATION
COUNTY OF ADDISON

TOWN OF LINCOLN
TH 1 (RURAL MAJOR COLLECTOR) OVER NEW HAVEN RIVER
BRIDGE NO.: 19 PROJECT NO.: BRF 0188 (8)

PRESTRESSED BOX BEAM REINFORCING DETAILS

DATE: FEB. 6, 2015
SCALE: NOTED
CHKD: M.W. DFTM: B.L.
JOB NO: 23459-015
DWG. NO: B3.1

F:\VT-Bridges\23459-15 Lincoln Bridge 19\23459-B3-1.dwg, 5/11/2015 2:55:06 PM

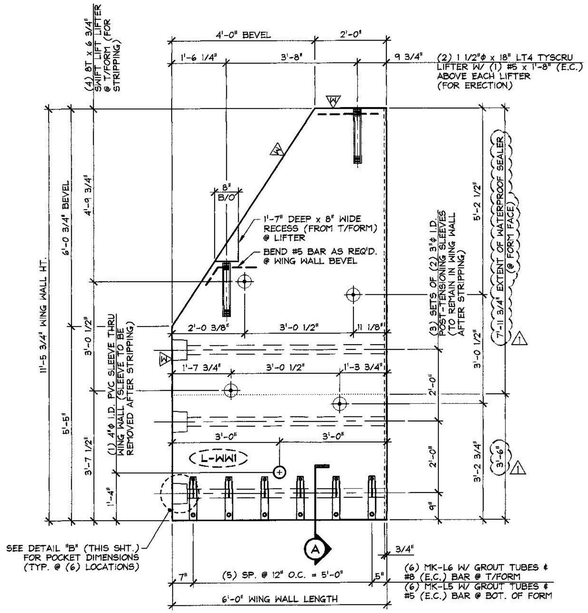


## DIMENSIONAL PLAN VIEW IN FORM

1/2" = 1'-0"

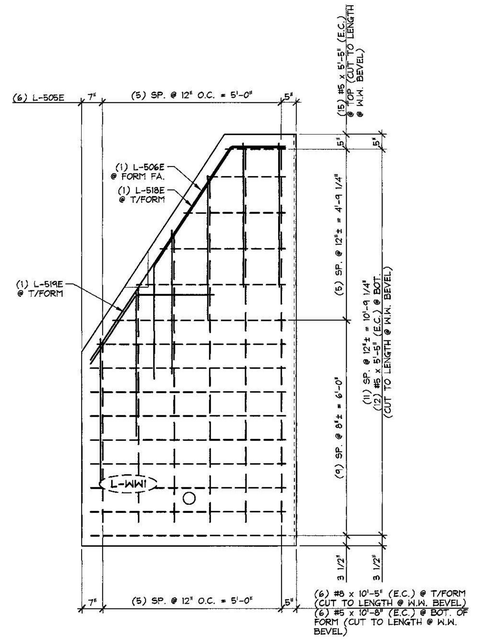


## REINFORCING PLAN VIEW IN FORM

1/2" = 1'-0"

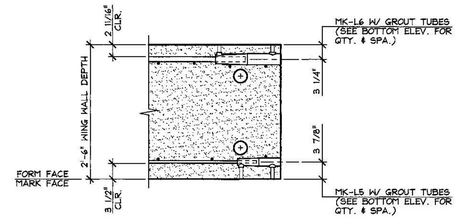


## A SPLICE SLEEVE DETAIL

3/4" = 1'-0"

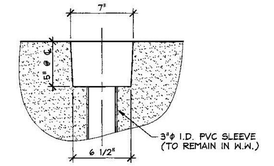


## B P.T. POCKET DETAIL

1 1/2" = 1'-0"

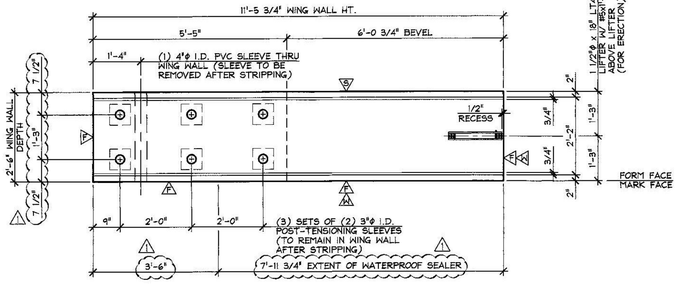


## WING WALL ELEVATION @ SHEAR KEY FACE

1/2" = 1'-0"

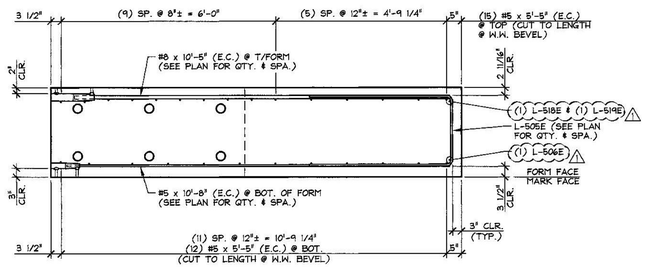


## LONGITUDINAL REINFORCING SECTION

1/2" = 1'-0"

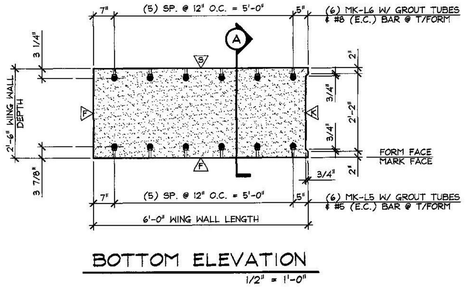


## BOTTOM ELEVATION

1/2" = 1'-0"

△ DENOTES SMOOTH SCREED FINISH
△ DENOTES (1) COAT WATERPROOF SEALER
△ DENOTES FORM FINISH
△ DENOTES ROUGHENED FINISH

**SHOP NOTE:**
f'c = 5,000 PSI
f'ci = 3,500 PSI
MIX #445MSCC

| MARK: L-WW1 | QTY.: 1 | WT.: 10.53 T | VOL.: 5.20 cy |
|---|---|---|---|

MATERIAL LIST / WING WALL

| ITEM | MARK | DESCRIPTION | QTY. |
|---|---|---|---|
| 1 | MK-L5 | NMB SPLICE SLEEVE 5U-X(PG) (EPOXY COATED) | 6 |
| 2 | MK-L6 | NMB SPLICE SLEEVE 8U-X(PG) (EPOXY COATED) | 6 |
| 3 | | | |
| 4 | L-505E | #5 BENT BAR (LEVEL 1, EPOXY COATED) | 6 |
| 5 | L-506E | #5 BENT BAR (LEVEL 1, EPOXY COATED) | 1 |
| 6 | L-518E | #5 BENT BAR (LEVEL 1, EPOXY COATED) | 1 |
| 7 | L-519E | #5 BENT BAR (LEVEL 1, EPOXY COATED) | 1 |
| 8 | | #5 x 10'-8" (LEVEL 1, EPOXY COATED) | 6 |
| 9 | | #5 x 5'-5" (LEVEL 1, EPOXY COATED) | 27 |
| 10 | | #5 x 1'-8" (LEVEL 1, EPOXY COATED) | 2 |
| 11 | | | |
| 12 | | #8 x 10'-5" (LEVEL 1, EPOXY COATED) | 6 |
| 13 | | | |
| 14 | | 1 1/2"ø x 18" LT4 TYSCRU LIFTER (GALV.) | 2 |
| 15 | | 8T x 6 3/4" SHIFT LIFT LIFTER (GALV.) | 4 |

Vermont Agency of Transportation

RECEIVED
ON: May 12, 2015
and Checked for
CONFORMANCE
BY: Todd A. Sumner DATE: 05/13/2015

SUBMITTAL REVIEW

Review is only for general conformity to the contract drawings and specifications and shall not relieve the contractor of his entire responsibility under the contract, including among other things, dimensions to be confirmed and correlated at the job site, and information that pertains to the fabrication processes or to techniques of construction.

☑ NO EXCEPTIONS TAKEN
☐ MAKE CORRECTIONS NOTED
RESUBMITTAL NOT REQUIRED
☐ AMEND AND RESUBMIT
☐ REJECTED - SEE REMARKS

PB AMERICAS, INC.
BY: Ray L. Jones
DATE: 5/12/2015

△ 4-27-15 GENERAL REVISIONS

APPROVAL STAMP:

J.P. CARRARA & SONS INC.
Precast & Prestress Manufacturer
2464 CASE STR., MIDDLEBURY, VERMONT 05753 Phone:(802)388-6361 Fax:(802)388-9010

J.A. McDONALD, INC.
CONTRACTOR
LYNDON CENTER, VERMONT

STATE OF VERMONT AGENCY OF TRANSPORTATION
COUNTY OF ADDISON

TOWN OF LINCOLN
TH 1 (RURAL MAJOR COLLECTOR) OVER NEW HAVEN RIVER
BRIDGE NO.: 19 PROJECT NO.: BRF 0188 (8)

PRECAST WING WALL DETAILS

DATE: FEB. 6, 2015
SCALE: NOTED
CHKD: M.W. DFTM: B.L.
JOB NO: 23459-015
DWG. NO: WW1

F:\VT-Bridges\23459-15 Lincoln Bridge 19\23459-WW1.dwg, 4/28/2015 3:55:38 PM

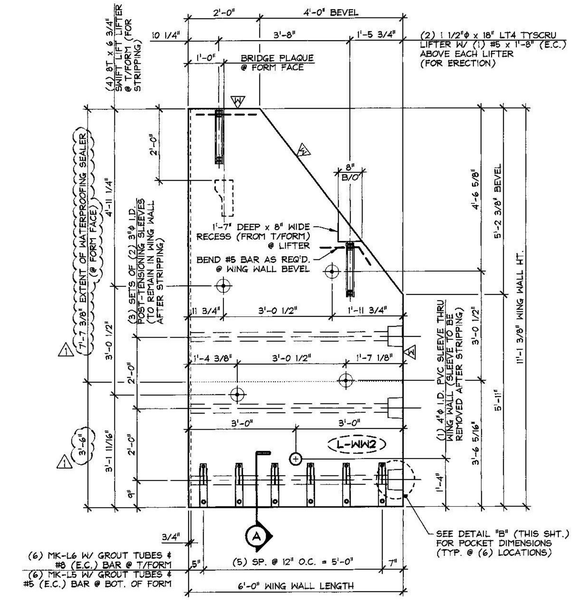


## DIMENSIONAL PLAN VIEW IN FORM

1/2" = 1'-0"

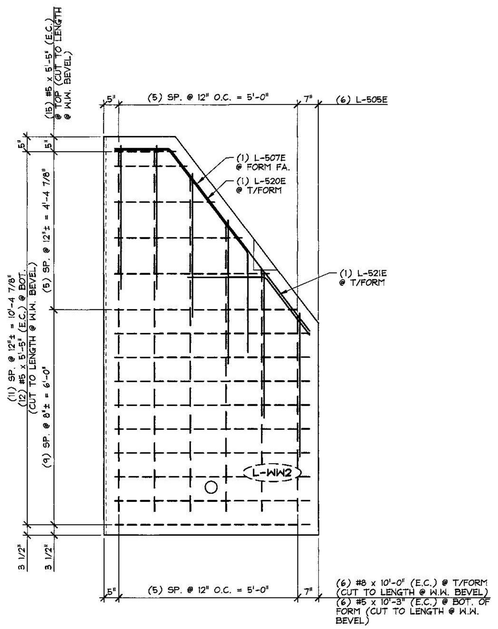


## REINFORCING PLAN VIEW IN FORM

1/2" = 1'-0"

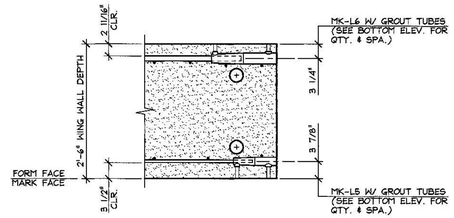


## A SPLICE SLEEVE DETAIL

3/4" = 1'-0"

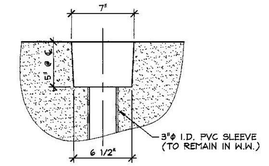


## B P.T. POCKET DETAIL

1 1/2" = 1'-0"

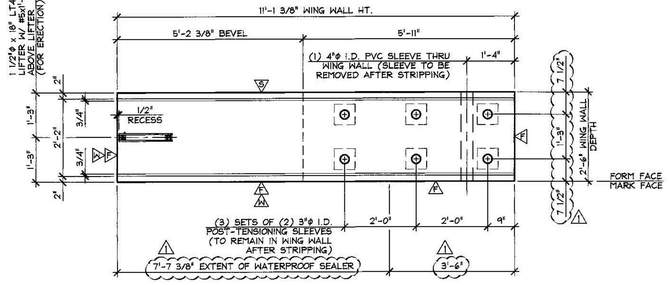


## WING WALL ELEVATION @ SHEAR KEY FACE

1/2" = 1'-0"

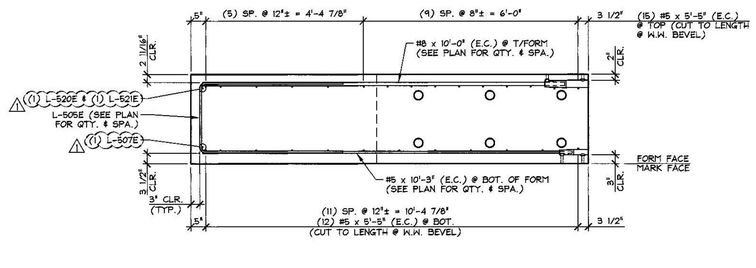


## LONGITUDINAL REINFORCING SECTION

1/2" = 1'-0"

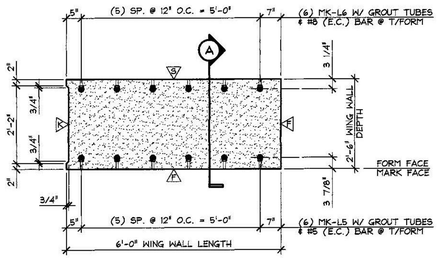


## BOTTOM ELEVATION

1/2" = 1'-0"

△ DENOTES SMOOTH SCREED FINISH
△ DENOTES (1) COAT WATERPROOF SEALER
△ DENOTES FORM FINISH
△ DENOTES ROUGHENED FINISH

**SHOP NOTE:**
f'c = 5,000 PSI
f'ci = 3,500 PSI
MIX #445MSCC

| MARK: L-WW2 | QTY.: 1 | WT.: 10.45 T | VOL.: 5.16 cy |
|---|---|---|---|

MATERIAL LIST / WING WALL

| ITEM | MARK | DESCRIPTION | QTY. |
|---|---|---|---|
| 1 | MK-L5 | NMB SPLICE SLEEVE 8U-X(PG) (EPOXY COATED) | 6 |
| 2 | MK-L6 | NMB SPLICE SLEEVE 8U-X(PG) (EPOXY COATED) | 6 |
| 3 | L-505E | #5 BENT BAR (LEVEL I, EPOXY COATED) | 6 |
| 4 | L-507E | #5 BENT BAR (LEVEL I, EPOXY COATED) | 1 |
| 5 | L-520E | #5 BENT BAR (LEVEL I, EPOXY COATED) | 1 |
| 6 | L-521E | #5 BENT BAR (LEVEL I, EPOXY COATED) | 1 |
| 7 | | #5 x 10'-3" (LEVEL I, EPOXY COATED) | 6 |
| 8 | | #5 x 5'-5" (LEVEL I, EPOXY COATED) | 27 |
| 9 | | #5 x 1'-8" (LEVEL I, EPOXY COATED) | 2 |
| 10 | | | |
| 11 | | #8 x 10'-0" (LEVEL I, EPOXY COATED) | 6 |
| 12 | | | |
| 13 | | 1 1/2"ϕ x 18" LT4 TYSCRU LIFTER (GALV.) | 2 |
| 14 | | 8T x 6 3/4" SWIFT LIFT LIFTER (GALV.) | 4 |
| 15 | | BRIDGE PLAQUE (SUPPLIED BY OTHERS) | 1 |

Vermont Agency of Transportation
RECEIVED
ON: May 12, 2015
and Checked for
CONFORMANCE
BY: Todd A. Sumner DATE: 05/13/2015

SUBMITTAL REVIEW
Review is only for general conformity to the contract drawings and specifications and shall not relieve the contractor of his entire responsibility under the contract, including among other things, dimensions to be confirmed and correlated at the job site, and information that pertains to the fabrication processes or to techniques of construction.
☑ NO EXCEPTIONS TAKEN
☐ MAKE CORRECTIONS NOTED RESUBMITTAL NOT REQUIRED
☐ AMEND AND RESUBMIT
☐ REJECTED - SEE REMARKS
PB AMERICAS, INC.
BY: Ray K Lemon
DATE: 5/12/2015

△ 4-27-15 GENERAL REVISIONS

APPROVAL STAMP:

J.P. CARRARA & SONS INC.
Precast & Prestress Manufacturer
2464 CASE STR., MIDDLEBURY, VERMONT 05753 Phone:(802)388-6361 Fax:(802)388-9010

J.A. McDONALD, INC.
CONTRACTOR
LYNDON CENTER, VERMONT

STATE OF VERMONT AGENCY OF TRANSPORTATION
COUNTY OF ADDISON

DATE: FEB. 6, 2015
SCALE: NOTED

TOWN OF LINCOLN
TH 1 (RURAL MAJOR COLLECTOR) OVER NEW HAVEN RIVER
BRIDGE NO.: 19 PROJECT NO.: BRF 0188 (8)

CHKD: M.W. DFTM: B.L.
JOB NO: 23459-015

PRECAST WING WALL DETAILS

DWG. NO: WW2

F:\VT-Bridges\23456-15 Lincoln Bridge 19\23459-WW2.dwg, 4/28/2015 3:56:33 PM

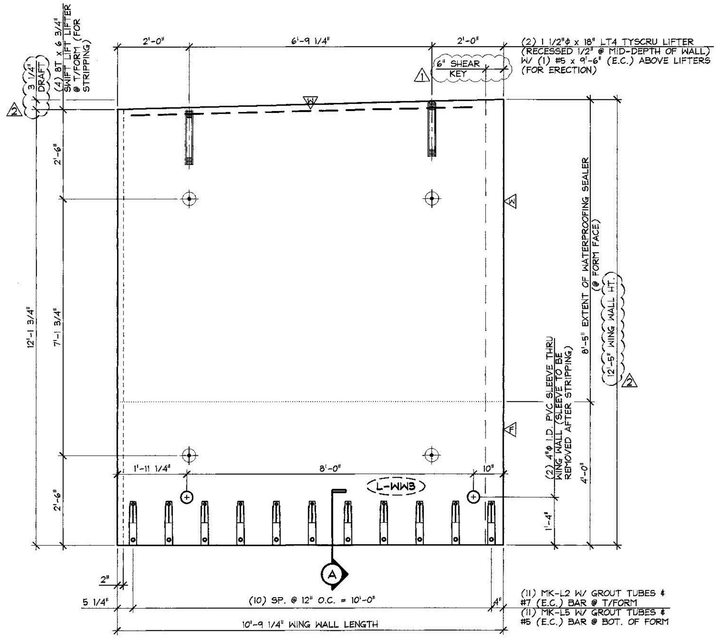


DIMENSIONAL PLAN VIEW IN FORM

1/2" = 1'-0"

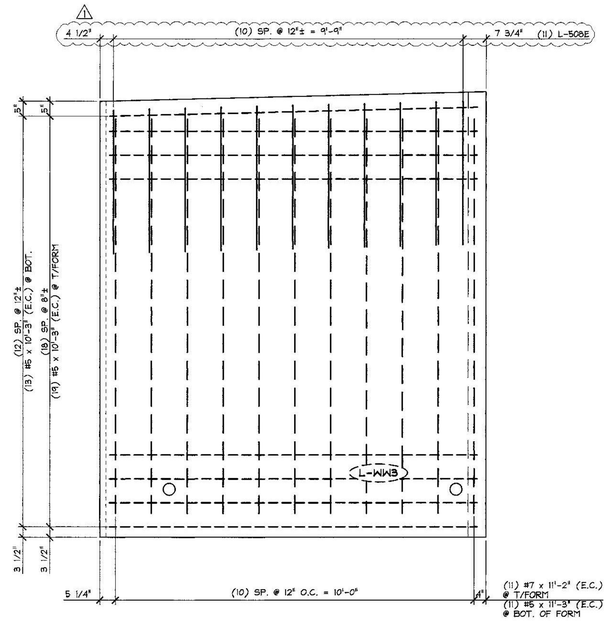


REINFORCING PLAN VIEW IN FORM

1/2" = 1'-0"

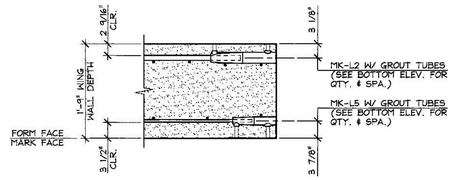


A SPLICE SLEEVE DETAIL

3/4" = 1'-0"

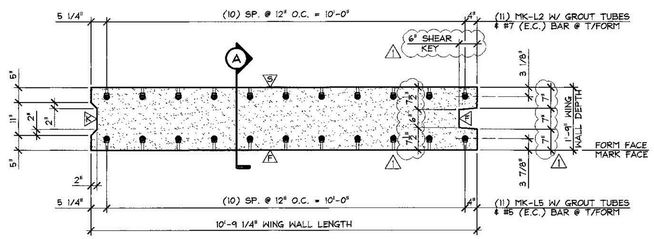


BOTTOM ELEVATION

1/2" = 1'-0"

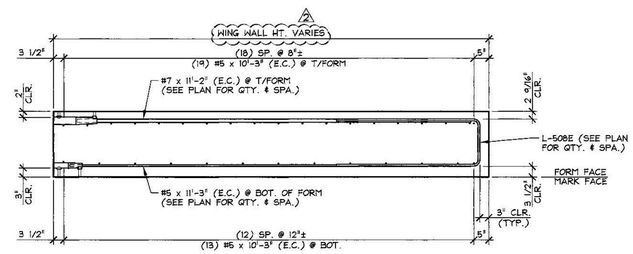


LONGITUDINAL REINFORCING SECTION

1/2" = 1'-0"

Vermont Agency of Transportation

RECEIVED

ON: May 12, 2015

and Checked for

CONFORMANCE

BY: Todd A. Sumner DATE: 05/13/2015

SUBMITTAL REVIEW

Review is only for general conformity to the contract drawings and specifications and shall not relieve the contractor of his entire responsibility under the contract, including among other things, dimensions to be confirmed and correlated at the job site, and information that pertains to the fabrication processes or to techniques of construction.

- [x] NO EXCEPTIONS TAKEN
- [ ] MAKE CORRECTIONS NOTED RESUBMITTAL NOT REQUIRED
- [ ] AMEND AND RESUBMIT
- [ ] REJECTED - SEE REMARKS

PB AMERICAS, INC.

BY: Ray L. Jones

DATE: 5/12/2015

A DENOTES SMOOTH SCREED FINISH

A DENOTES (1) COAT WATERPROOF SEALER

A DENOTES FORM FINISH

A DENOTES ROUGHENED FINISH

**SHOP NOTE:**
f'c = 5,000 PSI
f'ci = 3,500 PSI
MIX #445MSCC

| MARK: L-WW3 | QTY.: 1 | WT.: 17.06 T | VOL.: 8.42 cy |
|---|---|---|---|

MATERIAL LIST / WING WALL

| ITEM | MARK | DESCRIPTION | QTY. |
|---|---|---|---|
| 1 | MK-L2 | NMB SPLICE SLEEVE 7U-X(PG) (EPOXY COATED) | 11 |
| 2 | MK-L5 | NMB SPLICE SLEEVE 5U-X(PG) (EPOXY COATED) | 11 |
| 3 | | | |
| 4 | L-508E | #5 BENT BAR (LEVEL 1, EPOXY COATED) | 11 |
| 5 | | #5 x 11'-3" (LEVEL 1, EPOXY COATED) | 11 |
| 6 | | #5 x 10'-3" (LEVEL 1, EPOXY COATED) | 32 |
| 7 | | #5 x 9'-6" (LEVEL 1, EPOXY COATED) A | 1 |
| 8 | | | |
| 9 | | #7 x 11'-2" (LEVEL 1, EPOXY COATED) | 11 |
| 10 | | | |
| 11 | | | |
| 12 | | 1 1/2"ϕ x 18" LT4 TYSCRU LIFTER (GALV.) | 2 |
| 13 | | 8T x 6 3/4" SKWIFT LIFT LIFTER (GALV.) | 4 |
| 14 | | | |
| 15 | | | |

A 5-11-15 REVISED AS NOTED

A 4-27-15 GENERAL REVISIONS

APPROVAL STAMP:

J.P. CARRARA & SONS INC.
Precast & Prestress Manufacturer
2464 CASE STR., MIDDLEBURY, VERMONT 05753 Phone:(802)388-6361 Fax:(802)388-9010

J.A. McDONALD, INC.
CONTRACTOR
LYNDON CENTER, VERMONT

STATE OF VERMONT AGENCY OF TRANSPORTATION
COUNTY OF ADDISON

DATE: FEB. 6, 2015

SCALE: NOTED

TOWN OF LINCOLN
TH 1 (RURAL MAJOR COLLECTOR) OVER NEW HAVEN RIVER
BRIDGE NO.: 19 PROJECT NO.: BRF 0188 (8)

CHKD: M.W. DFTM: B.L.

JOB NO: 23459-015

PRECAST WING WALL DETAILS

DWG. NO: WW3

F:\VT-Bridges\23459-15 Lincoln Bridge 19\23459-WW3.dwg, 5/11/2015 3:01:30 PM

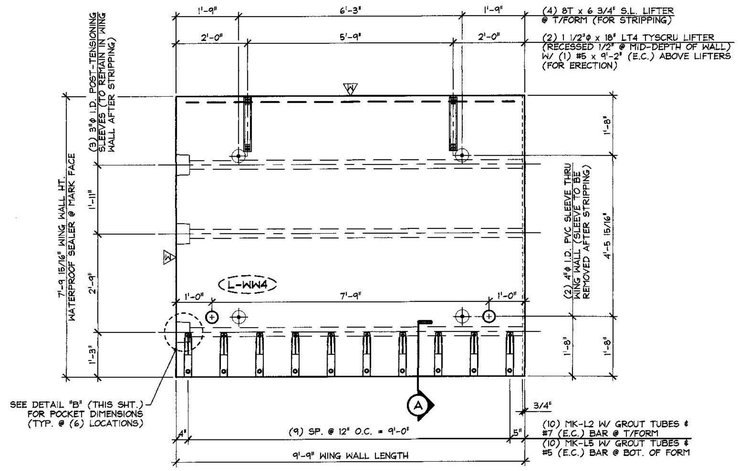


## DIMENSIONAL PLAN VIEW IN FORM

1/2" = 1'-0"

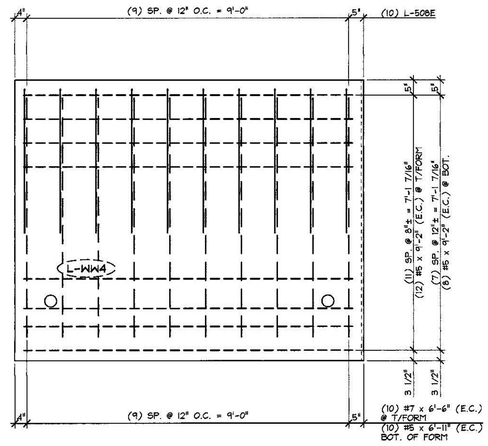


## REINFORCING PLAN VIEW IN FORM

1/2" = 1'-0"

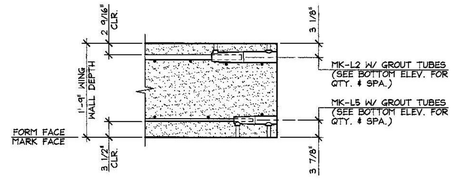


## A SPLICE SLEEVE DETAIL

3/4" = 1'-0"

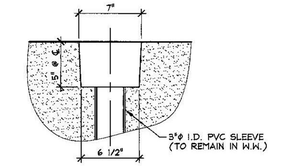


## B P.T. POCKET DETAIL

1 1/2" = 1'-0"

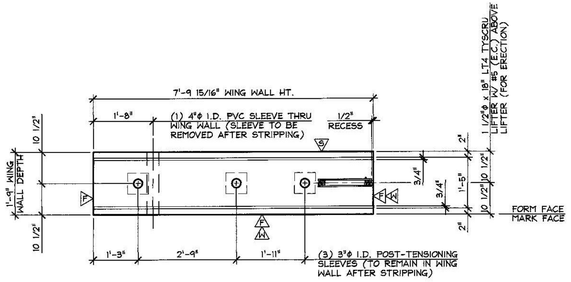


## WING WALL ELEVATION @ SHEAR KEY FACE

1/2" = 1'-0"

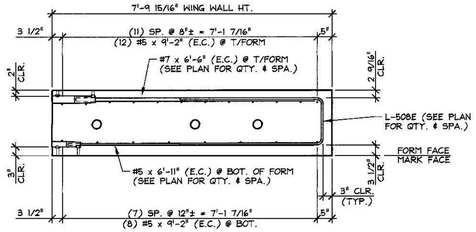


## LONGITUDINAL REINFORCING SECTION

1/2" = 1'-0"

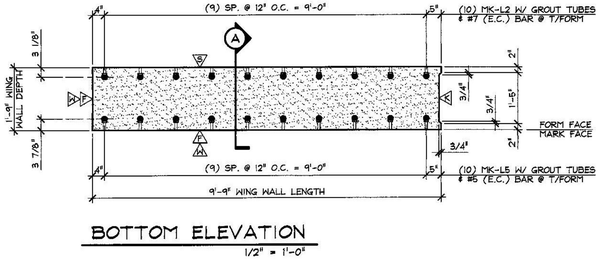


## BOTTOM ELEVATION

1/2" = 1'-0"

△S DENOTES SMOOTH SCREED FINISH
△W DENOTES (1) COAT WATERPROOF SEALER
△F DENOTES FORM FINISH
△R DENOTES ROUGHENED FINISH

**SHOP NOTE:**
f'c = 5,000 PSI
f'ci = 3,500 PSI
MIX #445M15CC

| MARK: L-WW4 | QTY.: 1 | WT.: 9.97 T | VOL.: 4.92 cy |
|---|---|---|---|

MATERIAL LIST / WING WALL

| ITEM | MARK | DESCRIPTION | QTY. |
|---|---|---|---|
| 1 | MK-L2 | NMB SPLICE SLEEVE 7U-X(PG) (EPOXY COATED) | 10 |
| 2 | MK-L5 | NMB SPLICE SLEEVE 5U-X(PG) (EPOXY COATED) | 10 |
| 3 | | | |
| 4 | L-508E | #5 BENT BAR (LEVEL I, EPOXY COATED) | 10 |
| 5 | | #5 x 6'-11" (LEVEL I, EPOXY COATED) | 10 |
| 6 | | #5 x 9'-2" (LEVEL I, EPOXY COATED) | 21 |
| 7 | | | |
| 8 | | #7 x 6'-6" (LEVEL I, EPOXY COATED) | 10 |
| 9 | | | |
| 10 | | | |
| 11 | | | |
| 12 | | 1 1/2"ø x 18' LT4 TYSCRU LIFTER (GALV.) | 2 |
| 13 | | 8T x 6 3/4" SHIFT LIFT LIFTER (GALV.) | 4 |
| 14 | | | |
| 15 | | | |

Vermont Agency of Transportation
2014-01-13 Lincoln BRF 0188(8) Precast LC_approved.pdf
RECEIVED
ON: May 12, 2015
and Checked for
CONFORMANCE
BY: Todd A. Sumner DATE: 05/13/2015

SUBMITTAL REVIEW
Review is only for general conformity to the contract drawings and specifications and shall not relieve the contractor of his entire responsibility under the contract, including among other things, dimensions to be confirmed and correlated at the job site, and information that pertains to the fabrication processes or to techniques of construction.
☑ NO EXCEPTIONS TAKEN
☐ MAKE CORRECTIONS NOTED
RESUBMITTAL NOT REQUIRED
☐ AMEND AND RESUBMIT
☐ REJECTED - SEE REMARKS
PB AMERICAS, INC.
BY: Ray G. Evans
DATE: 5/12/2015

△1 4-27-15 GENERAL REVISIONS

APPROVAL STAMP:

J.P. CARRARA & SONS INC.
Precast & Prestress Manufacturer
2464 CASE STR., MIDDLEBURY, VERMONT 05753 Phone:(802)388-6361 Fax:(802)388-9010

J.A. McDONALD, INC.
CONTRACTOR
LYNDON CENTER, VERMONT

STATE OF VERMONT AGENCY OF TRANSPORTATION
COUNTY OF ADDISON

TOWN OF LINCOLN
TH 1 (RURAL MAJOR COLLECTOR) OVER NEW HAVEN RIVER
BRIDGE NO.: 19 PROJECT NO.: BRF 0188 (8)

PRECAST WING WALL DETAILS

DATE: FEB. 6, 2015
SCALE: NOTED
CHKD: M.W. DFTM: B.L.
JOB NO: 23459-015
DWG. NO: WW4

F:\VT Bridges\23459-15 Lincoln Bridge 19\23459-WW4.dwg, 4/28/2015 3:55:55 PM

## MISCELLANEOUS MATERIALS

| ITEM | MARK | QTY. | DESCRIPTION | REMARKS | |
|---|---|---|---|---|---|
| 1 | | | | | PRECAST APPROACH SLABS |
| 2 | | 98 | #5 x 8'-8" (LEVEL II, DUAL COATED) | | |
| 3 | | 56 | #5 x 24'-3 1/2" (LEVEL II, DUAL COATED) | | |
| 4 | | | | | |
| 5 | | 48 | 4"ϕ I.D. x 1'-4" PVC SLEEVE | | |
| 6 | | 32 | 8T x 6 3/4" SWIFT LIFT LIFTER | GALVANIZED | |
| 7 | | | | | |
| 8 | | | | | |
| 9 | | | | | |
| 10 | | | | | |
| 11 | EM-L1 | 36 | ℄ 1" x 6" x 6" W/ (2) 3/4"ϕ HOLES (GALV.) | FOR ERECTION; SEE DETAIL THIS SHEET | PRESTRESSED BOX BEAMS |
| 12 | | 36 | 0.60"ϕ x 270 KSI (LOW LAX) x 47'-2" LONG POLY-STRAND (2) | FOR ERECTION | |
| 13 | | 72 | 0.60"ϕ SINGLE USE STRESSING CHUCK | FOR ERECTION | |
| 14 | | 126 | COMPRESSIBLE SEALER SELF ADHESIVE | FOR ERECTION | |
| 15 | | | | | |
| 16 | | 512 | #4 x 4'-5" (LEVEL II, DUAL COATED) | | |
| 17 | | 56 | #5 x 129'-9" (LEVEL II, DUAL COATED) W/ (3) 3'-8" STAG. LAPS | | |
| 18 | | | | | |
| 19 | MK-L3 | 138 | DAYTON #5 x 2'-3" D-101-A STRAIGHT DOWEL BAR SPLICER | STAINLESS STEEL CLAD | |
| 20 | MK-L4 | 58 | DAYTON C-24 TYPE 4-APR DECK FORM HANGER | GALVANIZED | |
| 21 | | 256 | 3/4"ϕ x 6 1/2" NON-FERROUS VOID DRAIN | | |
| 22 | | 16 | 2'-10" x 2'-9" x 9'-9 11/16" BOX VOID (2) | SEE BOX VOID DETAILS (1) | |
| 23 | | 48 | 2'-10" x 2'-9" x 12'-10 3/16" BOX VOID | SEE BOX VOID DETAILS | |
| 24 | | 32 | SET OF (4) 0.60"ϕ STRAND LIFTING LOOPS | MADE USING 4"ϕ PIN | |
| 25 | | | | | |

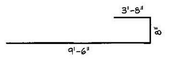


L-501D
#5 BENT BAR
LEVEL II (DUAL COATED)
USE 3'ϕ PIN
(196) REQ'D.

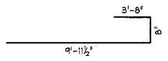


L-516D
#5 BENT BAR
LEVEL II (DUAL COATED)
USE 3'ϕ PIN
(98) REQ'D.

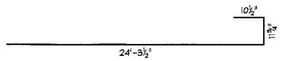


L-901D
#9 BENT BAR
LEVEL II (DUAL COATED)
USE 9½"ϕ PIN
(72) REQ'D.

## PRECAST APPROACH SLABS

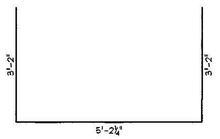


L-401D
#4 BENT BAR
LEVEL II (DUAL COATED)
USE 2'ϕ PIN
(672) REQ'D.

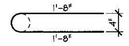


L-402D
#4 HAIRPIN
LEVEL II (DUAL COATED)
USE 3'ϕ PIN
(1,476) REQ'D.

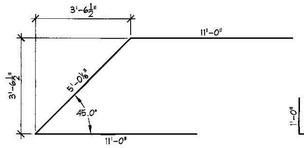


L-403D
#4 BENT BAR
LEVEL II (DUAL COATED)
USE 2'ϕ PIN
(112) REQ'D.

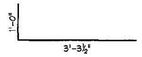


L-404D
#4 BENT BAR
LEVEL II (DUAL COATED)
USE 2'ϕ PIN
(896) REQ'D.

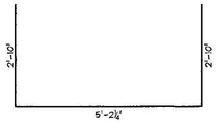


L-502D
#5 BENT BAR
LEVEL II (DUAL COATED)
USE 3'ϕ PIN
(1,792) REQ'D.

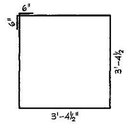


L-503D
#5 BENT BAR
LEVEL II (DUAL COATED)
USE 3'ϕ PIN
(288) REQ'D.

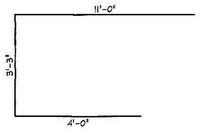


L-504D
#5 BENT BAR
LEVEL II (DUAL COATED)
USE 2'ϕ PIN
(128) REQ'D.

## PRESTRESSED BOX BEAMS

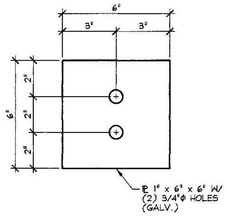


E M - L 1
3" = 1'-0"

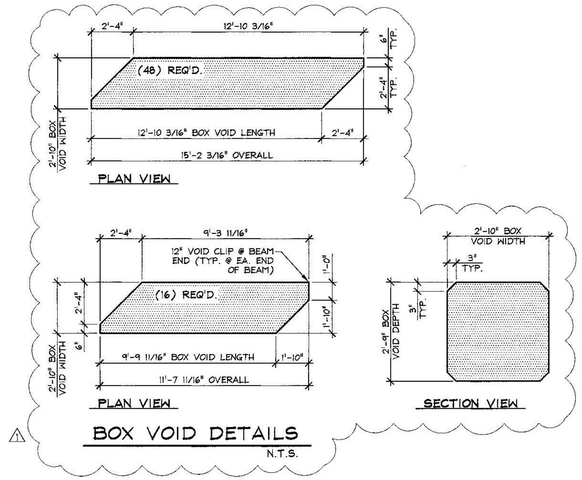


(1) BOX VOID DETAILS
N.T.S.

Vermont Agency of Transportation
20150517 Lincln BRF 0188(8) P Insert_07_approved.pdf
RECEIVED
ON: May 12, 2015
and Checked for
CONFORMANCE
BY: Todd A. Sumner DATE: 05/13/2015

SUBMITTAL REVIEW
Review is only for general conformity to the contract drawings and specifications and shall not relieve the contractor of his entire responsibility under the contract, including among other things, dimensions to be confirmed and correlated at the job site, and information that pertains to the fabrication processes or to techniques of construction.
☑ NO EXCEPTIONS TAKEN
☐ MAKE CORRECTIONS NOTED
RESUBMITTAL NOT REQUIRED
☐ AMEND AND RESUBMIT
☐ REJECTED - SEE REMARKS
PB AMERICAS, INC.
BY:
DATE: 5/12/2015

(2) 5-11-15 REVISED AS NOTED
(1) 4-27-15 REVISED AS NOTED

APPROVAL STAMP:

J.P. CARRARA & SONS INC.
Precast & Prestress Manufacturer
2466 CASE STR., MIDDLEBURY, VERMONT 05753 Phone:(802)388-6361 Fax:(802)388-9010

J.A. McDONALD, INC.
CONTRACTOR
LYNDON CENTER, VERMONT

STATE OF VERMONT AGENCY OF TRANSPORTATION
COUNTY OF ADDISON

TOWN OF LINCOLN
TH 1 (RURAL MAJOR COLLECTOR) OVER NEW HAVEN RIVER
BRIDGE NO.: 19 PROJECT NO.: BRF 0188 (8)

MATERIALS LIST

DATE: FEB. 6, 2015
SCALE: NOTED
CHKD: M.W. DFTM: B.L.
JOB NO: 23459-015
DWG. NO: M1

F:\VT-Bridges\23459-15 Lincoln Bridge 19\23459-M1.dwg, 5/11/2015 3:02:22 PM

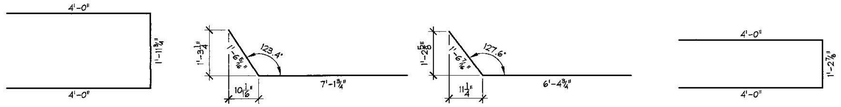


L-505E
#5 BENT BAR
LEVEL 1 (EPOXY COATED)
USE 2¾"ø L70 mm1 PIN
(72) REQ'D.

L-506E
#5 BENT BAR
LEVEL 1 (EPOXY COATED)
USE 2¾"ø L70 mm1 PIN
(1) REQ'D.

L-507E
#6 BENT BAR
LEVEL 1 (EPOXY COATED)
USE 2¾"ø L70 mm1 PIN
(2) REQ'D.

L-508E
#5 BENT BAR
LEVEL 1 (EPOXY COATED)
USE 2¾"ø L70 mm1 PIN
(21) REQ'D.

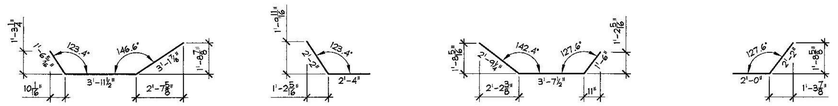


L-518E
#5 BENT BAR
LEVEL 1 (EPOXY COATED)
USE 2¾"ø L70 mm1 PIN
(1) REQ'D.

L-519E
#5 BENT BAR
LEVEL 1 (EPOXY COATED)
USE 2¾"ø L70 mm1 PIN
(1) REQ'D.

L-520E
#5 BENT BAR
LEVEL 1 (EPOXY COATED)
USE 2¾"ø L70 mm1 PIN
(1) REQ'D.

L-521E
#5 BENT BAR
LEVEL 1 (EPOXY COATED)
USE 2¾"ø L70 mm1 PIN
(1) REQ'D.

## PRECAST WING WALLS

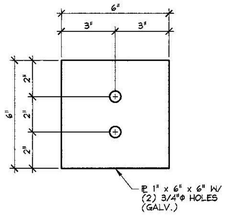


EM-L1
3" = 1'-0"

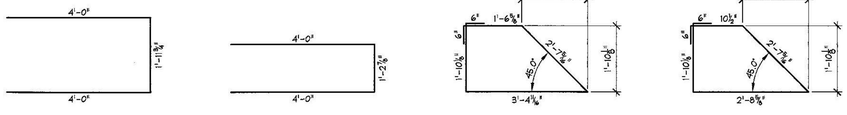


L-505E
#5 BENT BAR
LEVEL 1 (EPOXY COATED)
USE 2¾"ø L70 mm1 PIN
(72) REQ'D.

L-506E
#5 BENT BAR
LEVEL 1 (EPOXY COATED)
USE 2¾"ø L70 mm1 PIN
(5) REQ'D.

L-509E
#5 BENT BAR
LEVEL 1 (EPOXY COATED)
USE 2¾"ø L70 mm1 PIN
(6) REQ'D.

L-510E
#5 BENT BAR
LEVEL 1 (EPOXY COATED)
USE 2¾"ø L70 mm1 PIN
(6) REQ'D.

L-511E
#5 BENT BAR
LEVEL 1 (EPOXY COATED)
USE 2¾"ø L70 mm1 PIN
(38) REQ'D.

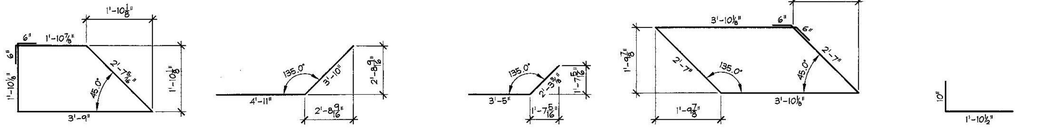


L-512E
#5 BENT BAR
LEVEL 1 (EPOXY COATED)
USE 2¾"ø L70 mm1 PIN
(6) REQ'D.

L-513E
#5 BENT BAR
LEVEL 1 (EPOXY COATED)
USE 2¾"ø L70 mm1 PIN
(13) REQ'D.

L-514E
#5 BENT BAR
LEVEL 1 (EPOXY COATED)
USE 2¾"ø L70 mm1 PIN
(14) REQ'D.

L-515E
#5 BENT BAR
LEVEL 1 (EPOXY COATED)
USE 2¾"ø L70 mm1 PIN
(6) REQ'D.

L-517E
#5 BENT BAR
LEVEL 1 (EPOXY COATED)
USE 2¾"ø L70 mm1 PIN
(37) REQ'D.

L-801E
#8 BENT BAR
LEVEL 1 (EPOXY COATED)
USE 6"ø PIN
(37) REQ'D.

## PRECAST ABUTMENTS

Vermont Agency of Transportation
2014-06-13 Lincoln BRF 0188(8) Finalized_IC_approved.pdf
RECEIVED
ON: May 12, 2015
and Checked for
CONFORMANCE
BY: Todd A. Sumner DATE: 05/13/2015

SUBMITTAL REVIEW
Review is only for general conformity to the contract drawings and specifications and shall not relieve the contractor of his entire responsibility under the contract, including among other things, dimensions to be confirmed and correlated at the job site, and information that pertains to the fabrication processes or to techniques of construction.
☑ NO EXCEPTIONS TAKEN
☐ MAKE CORRECTIONS NOTED
RESUBMITTAL NOT REQUIRED
☐ AMEND AND RESUBMIT
☐ REJECTED - SEE REMARKS
PB AMERICAS, INC.
BY: Ray L. Lowe
DATE: 5/12/2015

## MISCELLANEOUS MATERIALS

| ITEM | MARK | QTY. | DESCRIPTION | REMARKS |
|---|---|---|---|---|
| 1 | EM-L1 | 26 | 1" x 6" x 6" W/ (2) 3/4"ø HOLES (GALV.) | FOR ERECTION; SEE DETAIL THIS SHEET |
| 2 | | 6 | 1/2"ø x 270 KSI (LOW LAX) x 65'-8" LONG POLY-STRAND | FOR ERECTION |
| 3 | | 2 | 1/2"ø x 270 KSI (LOW LAX) x 55'-8" LONG POLY-STRAND | FOR ERECTION |
| 4 | | 2 | 1/2"ø x 270 KSI (LOW LAX) x 57'-2" LONG POLY-STRAND | FOR ERECTION |
| 5 | | 3 | 1/2"ø x 270 KSI (LOW LAX) x 15'-0" LONG POLY-STRAND ⚠2 | FOR ERECTION |
| 6 | | 26 | 1/2"ø SINGLE USE STRESSING CHUCK | FOR ERECTION |
| 7 | | | | |
| 8 | | | | |
| 9 | | | | |
| 10 | MK-L2 | 21 | NMB SPLICE SLEEVE 7U-X(PG) | EPOXY COATED |
| 11 | MK-L5 | 33 | NMB SPLICE SLEEVE 8U-X(PG) | EPOXY COATED |
| 12 | MK-L6 | 12 | NMB SPLICE SLEEVE 8U-X(PG) | EPOXY COATED |
| 13 | | | | |
| 14 | | 6 | #5 x 10'-8" (LEVEL 1, EPOXY COATED) | |
| 15 | | 54 | #5 x 5'-5" (LEVEL 1, EPOXY COATED) | |
| 16 | | 38 | #5 x 10'-3" (LEVEL 1, EPOXY COATED) | |
| 17 | | 11 | #5 x 11'-3" (LEVEL 1, EPOXY COATED) | |
| 18 | | 10 | #5 x 6'-11" (LEVEL 1, EPOXY COATED) | |
| 19 | | 4 | #5 x 1'-8" (LEVEL 1, EPOXY COATED) | |
| 20 | | 1 | #5 x 9'-6" (LEVEL 1, EPOXY COATED) ⚠1 | |
| 21 | | 21 | #5 x 9'-2" (LEVEL 1, EPOXY COATED) | |
| 22 | | | | |
| 23 | | 11 | #7 x 11'-2" (LEVEL 1, EPOXY COATED) | |
| 24 | | 10 | #7 x 6'-6" (LEVEL 1, EPOXY COATED) | |
| 25 | | | | |
| 26 | | 6 | #8 x 10'-5" (LEVEL 1, EPOXY COATED) | |
| 27 | | 6 | #8 x 10'-0" (LEVEL 1, EPOXY COATED) | |
| 28 | | | | |
| 29 | | 8 | 1 1/2"ø x 18" LT4 TYSCRU LIFTER | GALVANIZE |
| 30 | | 16 | 8T x 6 3/4" SWIFT LIFT LIFTER | GALVANIZE |
| 31 | | 1 | BRIDGE PLAQUE | SUPPLIED BY OTHERS |
| 32 | | | | |
| 33 | MK-L2 | 4 | NMB SPLICE SLEEVE 7U-X(PG) | EPOXY COATED |
| 34 | MK-L5 | 111 | NMB SPLICE SLEEVE 8U-X(PG) | EPOXY COATED |
| 35 | MK-L6 | 106 | NMB SPLICE SLEEVE 8U-X(PG) | EPOXY COATED |
| 36 | | | | |
| 37 | | 19 | #5 x 25'-3" (LEVEL 1, EPOXY COATED) | |
| 38 | | 26 | #5 x 5'-3" (LEVEL 1, EPOXY COATED) | |
| 39 | | 9 | #5 x 9'-3" (LEVEL 1, EPOXY COATED) | |
| 40 | | 19 ⚠1 | #5 x 24'-8" (LEVEL 1, EPOXY COATED) | |
| 41 | | 26 | #5 x 5'-1" (LEVEL 1, EPOXY COATED) | |
| 42 | | 8 | #5 x 9'-0" (LEVEL 1, EPOXY COATED) | |
| 43 | | 10 | #5 x 35'-8" (LEVEL 1, EPOXY COATED) | |
| 44 | | 10 | #5 x 7'-3" (LEVEL 1, EPOXY COATED) | |
| 45 | | 2 | #5 x 17'-6" (LEVEL 1, EPOXY COATED) | |
| 46 | | 21 | #5 x 15'-11" (LEVEL 1, EPOXY COATED) | |
| 47 | | 17 | #5 x 6'-1" (LEVEL 1, EPOXY COATED) | |
| 48 | | 5 | #5 x 11'-3" (LEVEL 1, EPOXY COATED) | |
| 49 | | 12 | #5 x 9'-1" (LEVEL 1, EPOXY COATED) | |
| 50 | | | | |
| 51 | | 4 | #7 x 11'-2" (LEVEL 1, EPOXY COATED) | |
| 52 | | | | |
| 53 | | 17 | #8 x 5'-10" (LEVEL 1, EPOXY COATED) | |
| 54 | | 26 | #8 x 4'-10" (LEVEL 1, EPOXY COATED) | |
| 55 | | 26 | #8 x 5'-0" (LEVEL 1, EPOXY COATED) | |
| 56 | | | | |
| 57 | | | | |
| 58 | | 2 | 4"ø I.D. x 6'-11" CORRUGATED PLASTIC SLEEVE | |
| 59 | | 6 | 4"ø I.D. x 2'-10 1/2" CORRUGATED PLASTIC SLEEVE | |
| 60 | | 4 | 4"ø I.D. x 6'-3" CORRUGATED PLASTIC SLEEVE | |
| 61 | | 4 | 4"ø I.D. x 6'-1" CORRUGATED PLASTIC SLEEVE | |
| 62 | | 1 | 20T x 19 3/4" SWIFT LIFT LIFTER | GALVANIZE |
| 63 | | 2 | SET OF (2) 1/2"ø STRAND LIFTING LOOPS | MADE USING 4"ø PIN |
| 64 | | 7 ⚠1 | SET OF (4) 0.60"ø STRAND LIFTING LOOPS | MADE USING 4"ø PIN |
| 65 | | | | |

ABUTMENTS & WING WALLS
PRECAST WING WALLS
PRECAST ABUTMENTS

⚠2 5-11-15 REVISED AS NOTED
⚠1 4-27-15 REVISED AS NOTED

APPROVAL STAMP:

J.P. CARRARA & SONS INC.
Precast & Prestress Manufacturer
2464 OSE STR., MIDDLEBURY, VERMONT 05753 Phone:(802)388-6361 Fax:(802)388-9010

J.A. McDONALD, INC.
CONTRACTOR
LYNDON CENTER, VERMONT

STATE OF VERMONT AGENCY OF TRANSPORTATION
COUNTY OF ADDISON

TOWN OF LINCOLN
TH 1 (RURAL MAJOR COLLECTOR) OVER NEW HAVEN RIVER
BRIDGE NO.: 19 PROJECT NO.: BRF 0188 (8)

MATERIALS LIST

DATE: FEB. 6, 2015
SCALE: NOTED
CHKD: M.A. DFTM: B.L.
JOB NO: 23459-015
DWG. NO: M2

F:\VT-Bridges\23459-15 Lincoln Bridge 19\23459-M2.dwg, 5/11/2015 3:03:15 PM

Vermont Agency of Transportation
RECEIVED
ON: June 23, 2015
and Checked for
CONFORMANCE
BY: Todd A. Sumner DATE: 06/23/2015

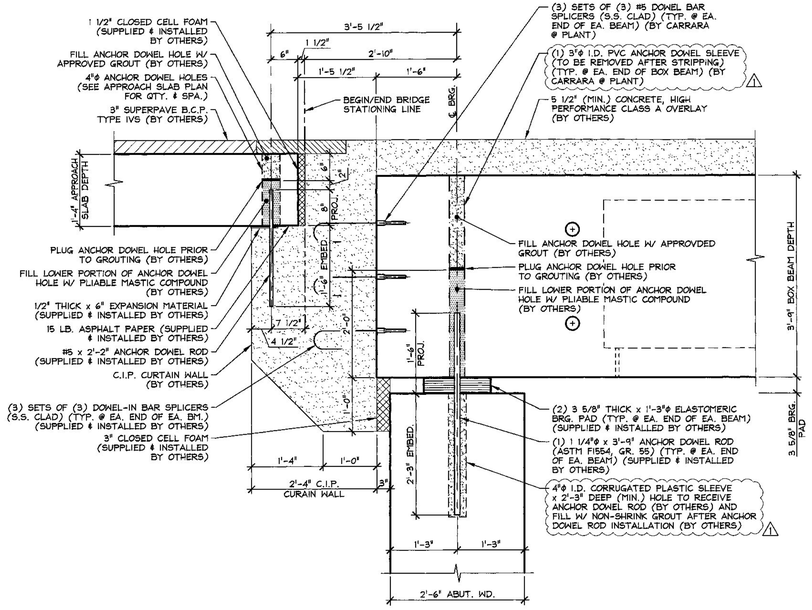


A/F8 BEARING SECTION
3/4" = 1'-0"

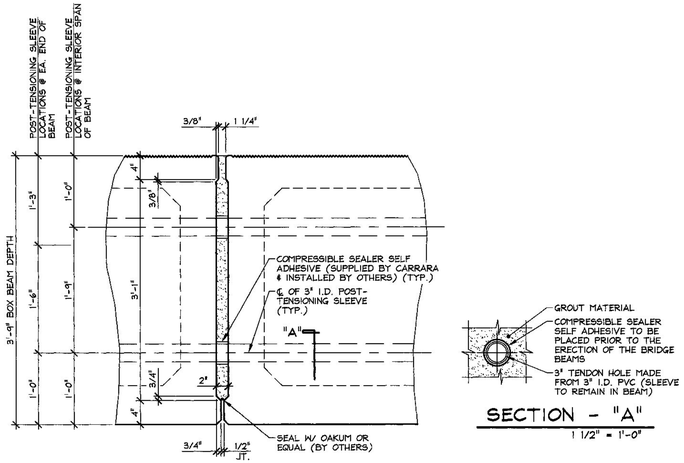


SECTION - "A"
1 1/2" = 1'-0"

B/F8 SHEAR KEY SECTION @ P.T. SLEEVE
1" = 1'-0"

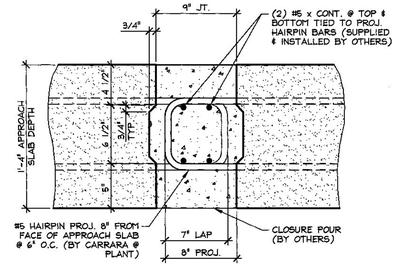


C/F8 SHEAR KEY SECTION @ APPROACH SLABS
1 1/2" = 1'-0"

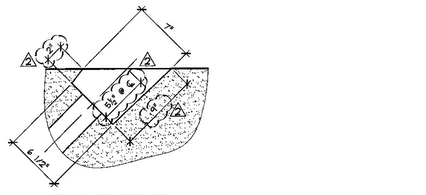


PLAN OF POCKET

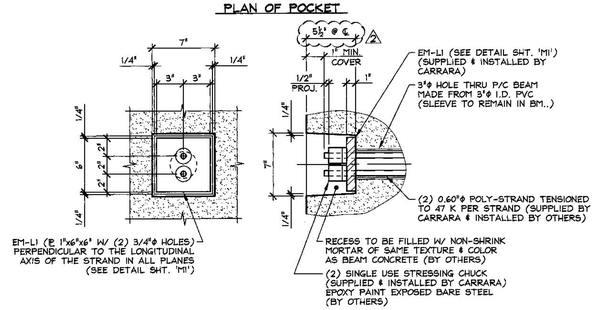


FASCIA ELEVATION SECTION AT CENTERLINE

DETAIL - "C"
1 1/2" = 1'-0"

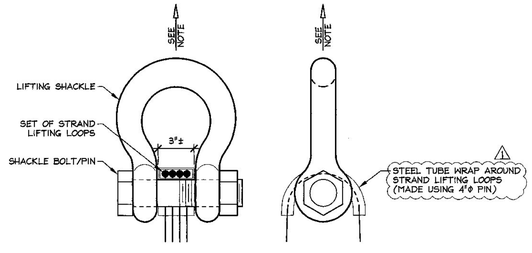


NOTE: BEAMS SHALL BE HANDLED AND ERECTED USING THE LIFTING LOOPS ONLY. RIGGING SHALL BE CONFIGURED SUCH THAT EQUAL FORCES ARE APPLIED TO EACH SET OF LIFTING LOOPS AT EACH END OF THE SLAB. SHACKLE BOLT/PIN SHALL BE PLACED UNDER LIFT LOOPS AS SHOWN. DESIGN AND CONFIGURATION OF RIGGING BY PURCHASER.

LIFTING SHACKLE DETAILS
N.T.S.

SUBMITTAL REVIEW

Review is only for general conformity to the contract drawings and specifications and shall not relieve the contractor of his entire responsibility under the contract, including among other things, dimensions to be confirmed and correlated at the job site, and information that pertains to the fabrication processes or to techniques of construction.

- [x] NO EXCEPTIONS TAKEN
- [ ] MAKE CORRECTIONS NOTED RESUBMITTAL NOT REQUIRED
- [ ] AMEND AND RESUBMIT
- [ ] REJECTED - SEE REMARKS

TB AMERICAS, INC.
BY: Ray. L. Vance
DATE: 6/23/2015

△2 6-22-15 REVISE POST-TENSIONING POCKET
△1 4-27-15 REVISED AS NOTED

APPROVAL STAMP:

J.P. CARRARA & SONS INC.
Precast & Prestress Manufacturer
2464 CASE STR., MIDDLEBURY, VERMONT 05753 Phone:(802)388-6361 Fax:(802)388-9010

J.A. McDONALD, INC.
CONTRACTOR
LYNDON CENTER, VERMONT

STATE OF VERMONT AGENCY OF TRANSPORTATION
COUNTY OF ADDISON

TOWN OF LINCOLN
TH 1 (RURAL MAJOR COLLECTOR) OVER NEW HAVEN RIVER
BRIDGE NO.: 19 PROJECT NO.: BRF 0188 (8)

PRESTRESSED BOX BEAM SECTIONS & DETAILS

DATE: FEB. 6, 2015
SCALE: NOTED
CHKD: M.W. DFTM: B.L.
JOB NO: 23459-015
DWG. NO: F8

F:\VT-Bridges\23459-15 Lincoln Bridge 19\23459-F8.dwg, 6/22/2015 11:56:27 AM

Vermont Agency of Transportation
RECEIVED
ON: June 23, 2015
and Checked for
CONFORMANCE
BY: Todd A. Sumner DATE: 06/23/2015

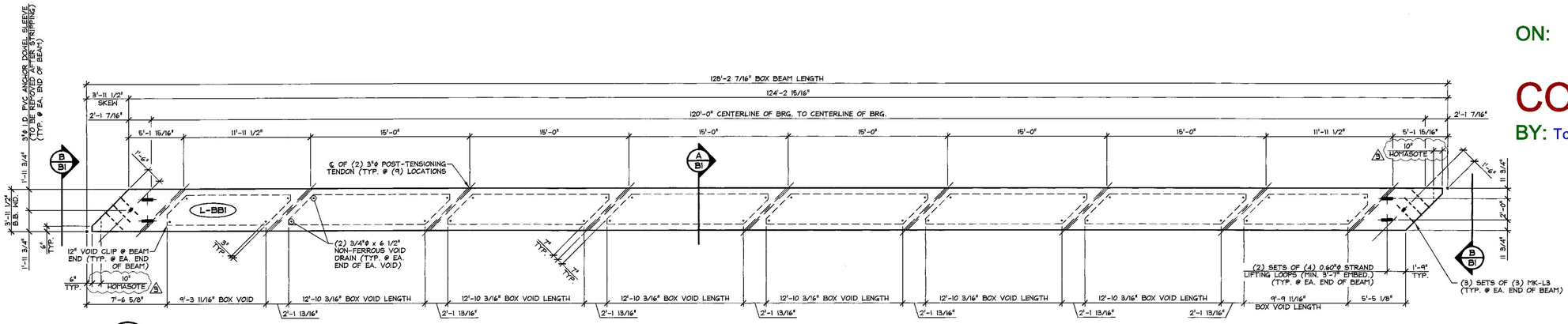


1/B1 DIMENSIONAL PLAN VIEW IN FORM
3/16" = 1'-0"

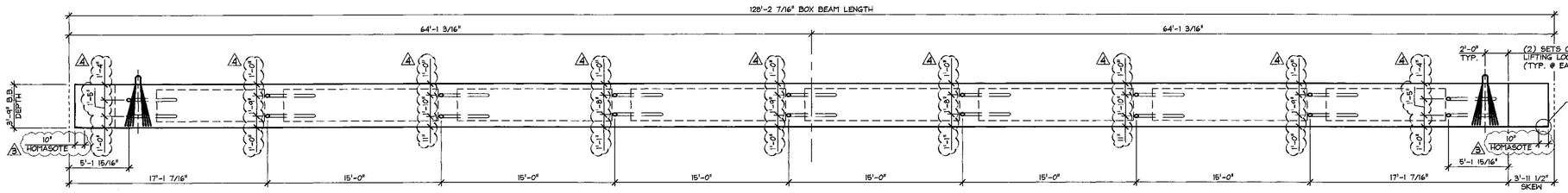


2/B1 DIMENSIONAL ELEVATION
3/16" = 1'-0"

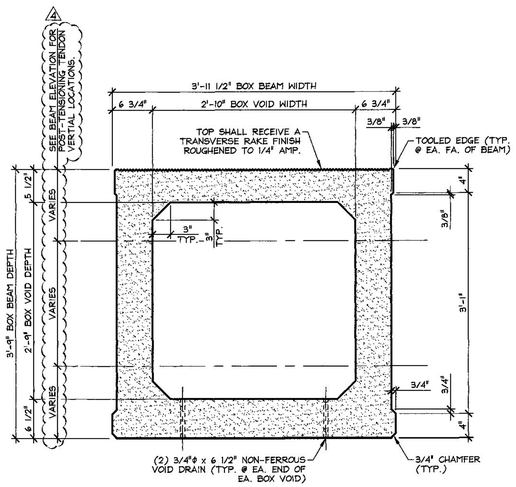


A/B1 DIMENSIONAL SECTION
1" = 1'-0"

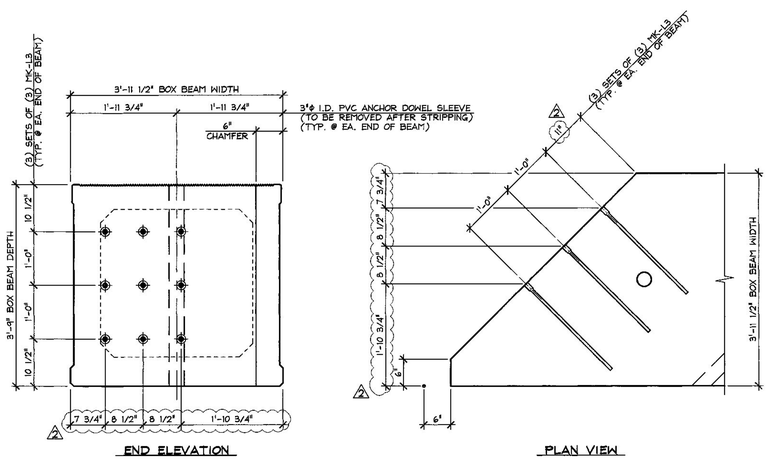


B/B1 BEAM END DETAILS
3/4" = 1'-0"

SUBMITTAL REVIEW
Review is only for general conformity to the contract drawings and specifications and shall not relieve the contractor of his entire responsibility under the contract, including among other things, dimensions to be confirmed and correlated at the job site, and information that pertains to the fabrication processes or to techniques of construction.
☑ NO EXCEPTIONS TAKEN
☐ MAKE CORRECTIONS NOTED
RESUBMITTAL NOT REQUIRED
☐ AMEND AND RESUBMIT
☐ REJECTED - SEE REMARKS
BY: TB, AMERICAS, INC.
DATE: 6/23/2015

△6 6-22-15 REVISE P.T. TENDON LOCATIONS
△5 6-17-15 REVISE HOMASOTE DETAIL
△4 5-11-15 REVISED AS NOTED
△3 4-27-15 GENERAL REVISIONS

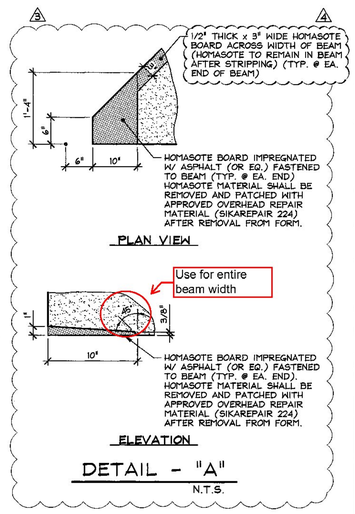


DETAIL - "A"
N.T.S.

**SHOP NOTE:**
f'c = 8,000 PSI
f'ci = 6,000 PSI
MIX #426M (NO DC1)

| MARK: L-BB1 | QTY.: 6 | WT.: 76.64 T | VOL.: 37.84 cy |
|---|---|---|---|

MATERIAL LIST / BOX BEAM

| ITEM | MARK | DESCRIPTION | QTY. |
|---|---|---|---|
| 1 | | | |
| 2 | | | |
| 3 | MK-L3 | DAYTON #5 x 2'-3" D-101-A STRAIGHT DOWEL BAR SPLICER (STAINLESS STEEL CLAD) | 18 |
| 4 | | | |
| 5 | | | |
| 6 | | 3/4"ø x 6 1/2" NON-FERROUS VOID DRAIN | 32 |
| 7 | | 2'-10" x 2'-9" x 9'-9 11/16" BOX VOID | 2 |
| 8 | | 2'-10" x 2'-9" x 12'-10 3/16" BOX VOID | 6 |
| 9 | | SET OF (4) 0.60"ø STRAND LIFTING LOOPS | 4 |
| 10 | | | |

APPROVAL STAMP:

J.P. CARRARA & SONS INC.
Precast & Prestress Manufacturer
2484 CASE STR., MIDDLEBURY, VERMONT 05753 Phone:(802)388-6361 Fax:(802)388-9010

J.A. McDONALD, INC.
CONTRACTOR
LYNDON CENTER, VERMONT

STATE OF VERMONT AGENCY OF TRANSPORTATION
COUNTY OF ADDISON

TOWN OF LINCOLN
TH 1 (RURAL MAJOR COLLECTOR) OVER NEW HAVEN RIVER
BRIDGE NO.: 19 PROJECT NO.: BRF 0188 (8)

PRESTRESSED BOX BEAM
DIMENSIONAL DETAILS

DATE: FEB. 6, 2015
SCALE: NOTED
CHKD: M.W. DFTM: B.L.
JOB NO: 23459-015
DWG. NO: B1

F:\VT-Bridges\23459-15 Lincoln Bridge 19\23459-B1.dwg, 6/23/2015 10:18:01 AM

Vermont Agency of Transportation
RECEIVED
ON: June 23, 2015
and Checked for
CONFORMANCE
BY: Todd A. Sumner DATE: 06/23/2015

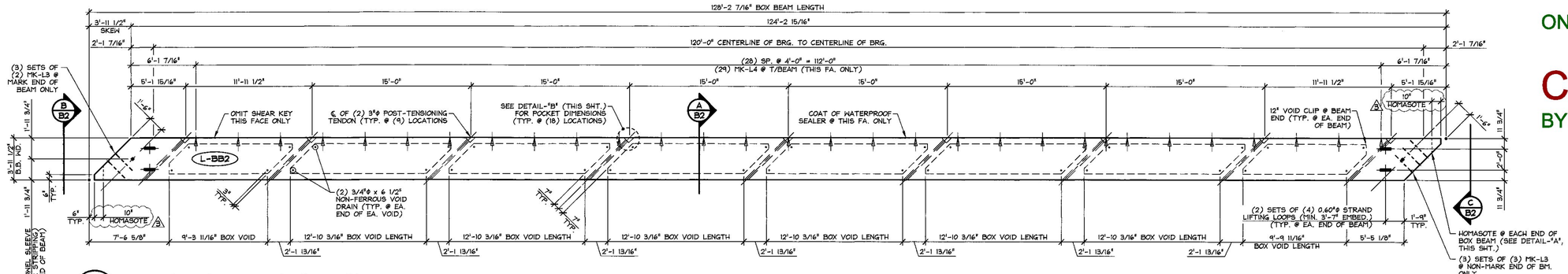


1/B2 DIMENSIONAL PLAN VIEW IN FORM
3/16" = 1'-0"

**SHOP NOTE:**
SEE "2/B1" FOR BEAM ELEVATION FOR POST-TENSIONING TENDON VERTIAL LOCATIONS.

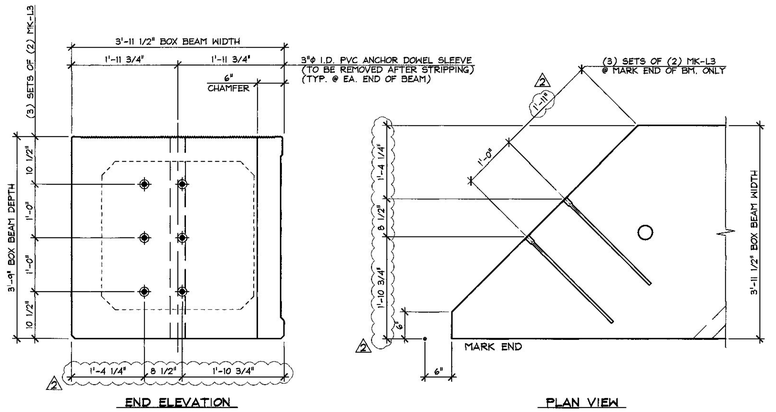


B/B2 BEAM END DETAILS
3/4" = 1'-0"

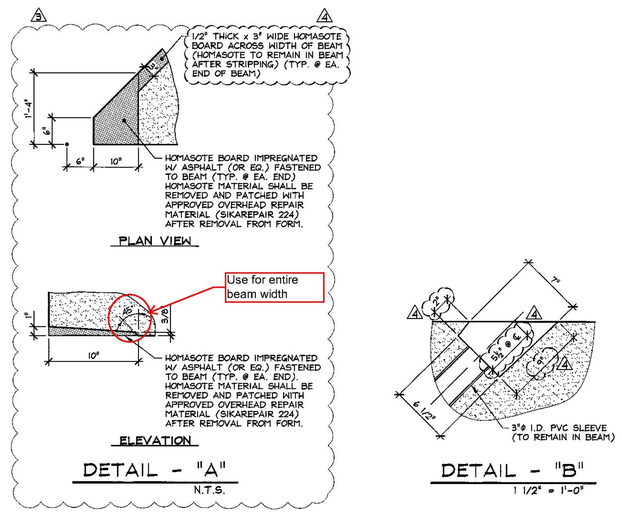


DETAIL - "A"
N.T.S.




DETAIL - "B"
1 1/2" = 1'-0"

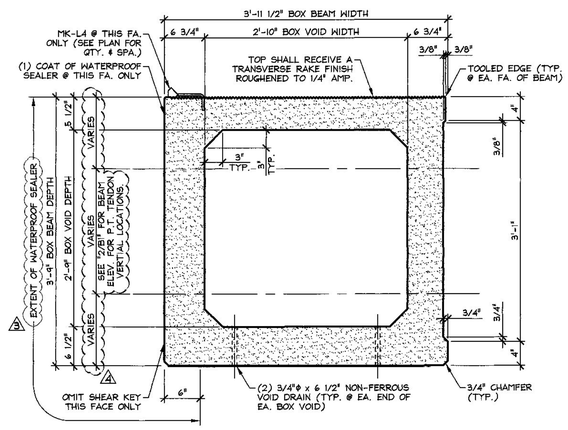


A/B2 DIMENSIONAL SECTION
1" = 1'-0"

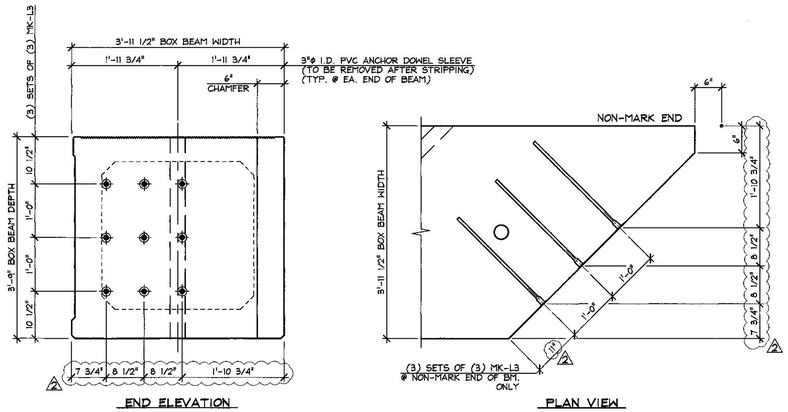


C/B2 BEAM END DETAILS
3/4" = 1'-0"

**SUBMITTAL REVIEW**

Review is only for general conformity to the contract drawings and specifications and shall not relieve the contractor of his entire responsibility under the contract, including among other things, dimensions to be confirmed and correlated at the job site, and information that pertains to the fabrication processes or to techniques of construction.

- [x] NO EXCEPTIONS TAKEN
- [ ] MAKE CORRECTIONS NOTED RESUBMITTAL NOT REQUIRED
- [ ] AMEND AND RESUBMIT
- [ ] REJECTED - SEE REMARKS

BY: PB AMERICAS, INC.
DATE: 6/23/2015

**SHOP NOTE:**
f'c = 8,000 PSI
f'ci = 6,000 PSI
MIX #426M (NO DCI)

| MARK: L-BB2 | QTY.: 1 | WT.: 78.51 T | VOL.: 38.77 cy |
|---|---|---|---|

MATERIAL LIST / BOX BEAM

| ITEM | MARK | DESCRIPTION | QTY. |
|---|---|---|---|
| 1 | | | |
| 2 | | | |
| 3 | MK-L3 | DAYTON #5 x 2'-3" D-101-A STRAIGHT DOWEL BAR SPLICER (STAINLESS STEEL CLAD) | 15 |
| 4 | MK-L4 | DAYTON C-24 TYPE 4-APR DECK FORM HANGER (GALV.) | 29 |
| 5 | | | |
| 6 | | 3/4"ϕ x 6 1/2" NON-FERROUS VOID DRAIN | 32 |
| 7 | | 2'-10" x 2'-9" x 9'-9 11/16" BOX VOID | 2 |
| 8 | | 2'-10" x 2'-9" x 12'-10 3/16" BOX VOID | 6 |
| 9 | | SET OF (4) 0.60"ϕ STRAND LIFTING LOOPS | 4 |
| 10 | | | |

△4 6-22-15 REVISE P.T. TENDON LOCATIONS & POCKET DIMENSIONS
△3 6-17-15 REVISE HOMASOTE DETAIL & WATERPROOFING
△2 5-11-15 REVISED AS NOTED
△1 4-27-15 GENERAL REVISIONS

APPROVAL STAMP:

J.P. CARRARA & SONS INC.
Precast & Prestress Manufacturer
2464 OAK STR., MIDDLEBURY, VERMONT 05753 Phone:(802)388-6361 Fax:(802)388-9010

J.A. McDONALD, INC.
CONTRACTOR
LYNDON CENTER, VERMONT

STATE OF VERMONT AGENCY OF TRANSPORTATION
COUNTY OF ADDISON

DATE: FEB. 6, 2015
SCALE: NOTED

TOWN OF LINCOLN
TH 1 (RURAL MAJOR COLLECTOR) OVER NEW HAVEN RIVER
BRIDGE NO.: 19 PROJECT NO.: BRF 0188 (8)

CHKD: M.H. DFTM: B.L.
JOB NO: 23459-015

PRESTRESSED BOX BEAM DIMENSIONAL DETAILS

DWG. NO: B2

F:\VT-Bridges\23459-15 Lincoln Bridge 19\23459-B2.dwg, 6/23/2015 10:19:08 AM

Vermont Agency of Transportation
RECEIVED
ON: June 23, 2015
and Checked for
CONFORMANCE
BY: Todd A. Sumner DATE: 06/23/2015

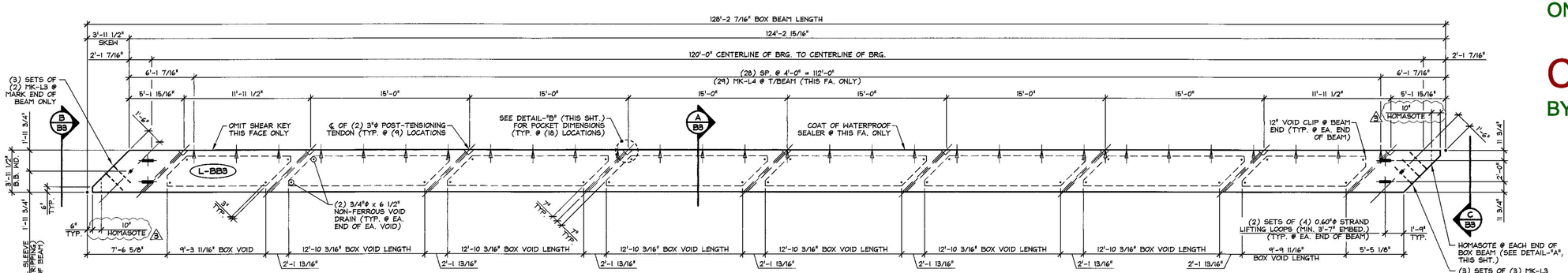


1 B3 DIMENSIONAL PLAN VIEW IN FORM
3/16" = 1'-0"

**SHOP NOTE:**
SEE "2/B1" FOR BEAM ELEVATION FOR POST-TENSIONING TENDON VERTIAL LOCATIONS.

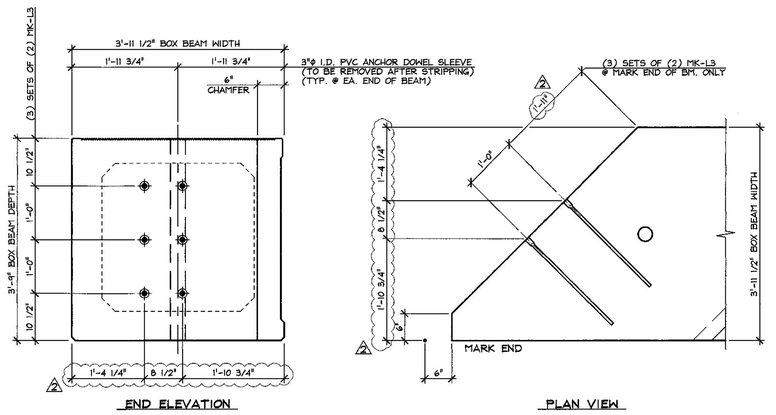


B B3 BEAM END DETAILS
3/4" = 1'-0"

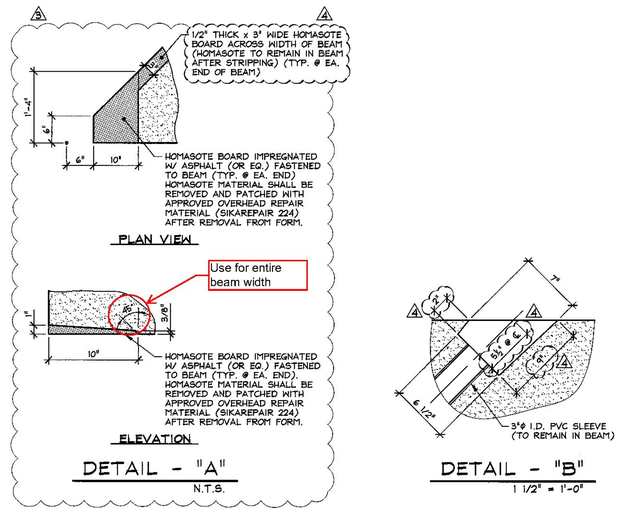


DETAIL - "A"
N.T.S.




DETAIL - "B"
1 1/2" = 1'-0"

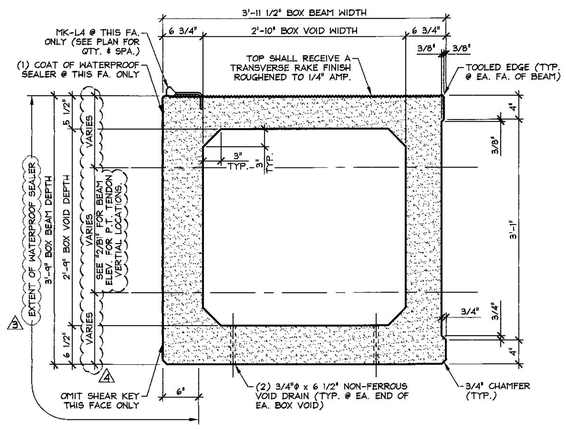


A B3 DIMENSIONAL SECTION
1" = 1'-0"

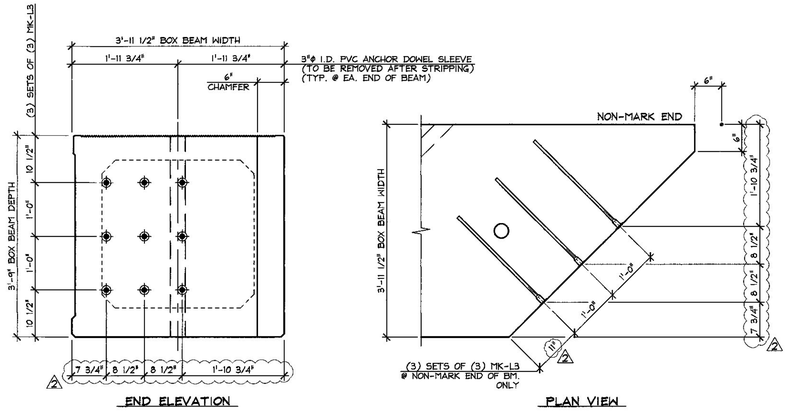


C B3 BEAM END DETAILS
3/4" = 1'-0"

**SUBMITTAL REVIEW**

Review is only for general conformity to the contract drawings and specifications and shall not relieve the contractor of his entire responsibility under the contract, including among other things, dimensions to be confirmed and correlated at the jobsite, and information that pertains to the fabrication processes or to techniques of construction.

- ☑ NO EXCEPTIONS TAKEN
- ☐ MAKE CORRECTIONS NOTED RESUBMITTAL NOT REQUIRED
- ☐ AMEND AND RESUBMIT
- ☐ REJECTED - SEE REMARKS

PTB AMERICAS, INC.
BY: Glenn Kolb
DATE: 6/23/2015

**SHOP NOTE:**
f'c = 8,000 PSI
f'ci = 6,000 PSI
MIX #426M (NO DCI)

| MARK: L-BB3 | QTY.: 1 | WT.: 78.51 T | VOL.: 38.77 cy |
|---|---|---|---|

MATERIAL LIST / BOX BEAM

| ITEM | MARK | DESCRIPTION | QTY. |
|---|---|---|---|
| 1 | | | |
| 2 | | | |
| 3 | MK-L3 | DAYTON #5 x 2'-3" D-101-A STRAIGHT DOWEL BAR SPLICER (STAINLESS STEEL CLAD) | 15 |
| 4 | MK-L4 | DAYTON C-24 TYPE 4-APR DECK FORM HANGER (GALV.) | 29 |
| 5 | | | |
| 6 | | 3/4"ϕ x 6 1/2" NON-FERROUS VOID DRAIN | 32 |
| 7 | | 2'-10" x 2'-9" x 9'-9 11/16" BOX VOID | 2 |
| 8 | | 2'-10" x 2'-9" x 12'-10 3/16" BOX VOID | 6 |
| 9 | | SET OF (4) 0.60"ϕ STRAND LIFTING LOOPS | 4 |
| 10 | | | |

△6 6-22-15 REVISE P.T. TENDON LOCATIONS & POCKET DIMENSIONS
△5 6-17-15 REVISE HOMASOTE DETAIL & WATERPROOFING
△4 5-11-15 REVISED AS NOTED
△3 4-27-15 GENERAL REVISIONS

APPROVAL STAMP:

J.P. CARRARA & SONS INC.
Precast & Prestress Manufacturer
2464 CASE STR., MIDDLEBURY, VERMONT 05753 Phone:(802)388-6361 Fax:(802)388-9010

J.A. McDONALD, INC.
CONTRACTOR
LYNDON CENTER, VERMONT

STATE OF VERMONT AGENCY OF TRANSPORTATION
COUNTY OF ADDISON

DATE: FEB. 6, 2015
SCALE: NOTED

TOWN OF LINCOLN
TH 1 (RURAL MAJOR COLLECTOR) OVER NEW HAVEN RIVER
BRIDGE NO.: 19 PROJECT NO.: BRF 0188 (8)

CHKD: M.W. DFTM: B.L.
JOB NO: 23459-015

PRESTRESSED BOX BEAM DIMENSIONAL DETAILS

DWG. NO: B3

F:\VT-Bridges\23459-15 Lincoln Bridge 19\23459-B3.dwg, 6/23/2015 10:20:24 AM