Record Plans
Contractor: ENGINEERS CONSTRUCTION, INC.
Resident Engineer: JOE KNIPES
Construction Began: JUNE 9, 2017
Construction Complete: NOVEMBER 30, 2017
Record Plans By: JOE KNIPES & JESSE IVES

I hereby certify that all construction required by this set of drawings has been accomplished as indicated herein.

BY: e-Signed by Joe Knipes on 2018-10-11 14:52:06 GMT Resident Engineer

Date: October 11, 2018

NOTE: Any further information concerning final quantities, amounts or other details relative to this project may be found at Central Files in the electronic archives.

STATE OF VERMONT
AGENCY OF TRANSPORTATION

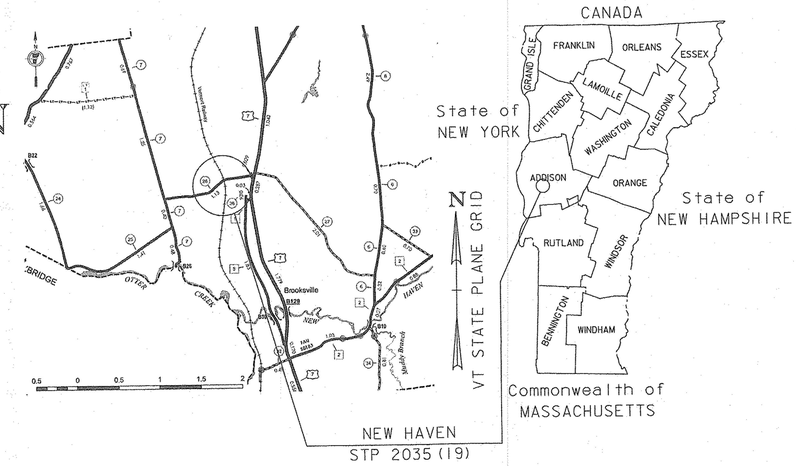

PROPOSED IMPROVEMENT
GRADE CROSSING PROJECT

TOWN OF NEW HAVEN
COUNTY OF ADDISON
ROUTE NO: TH 26 (CAMPGROUND ROAD) RURAL LOCAL

DOT CROSSING NO: 851364Y

PROJECT LOCATION: RAIL-HIGHWAY CROSSING AARDOT 851364Y AT THE VERMONT RAILWAY, INC (VTR) NORTHERN MP 92.55 AND CAMPGROUND ROAD APPROXIMATELY 0.36 MILES WEST OF US 7 ETHAN ALLEN HIGHWAY.

PROJECT DESCRIPTION: RECONSTRUCTION OF AN EXISTING RAILROAD CROSSING, WELDED RAIL PANEL THROUGH CROSSING, SUPERELEVATION CHANGES TO RAILROAD, MODIFICATIONS TO ROADWAY PROFILE, PAVEMENT MARKINGS, SIGNS AND NEW ACTIVE WARNING DEVICES INCLUDING GATES AND FLASHERS.

PROJECT LENGTH: LENGTH OF ROADWAY: 275.00 FT
LENGTH OF RAILROAD: 125.00 FT

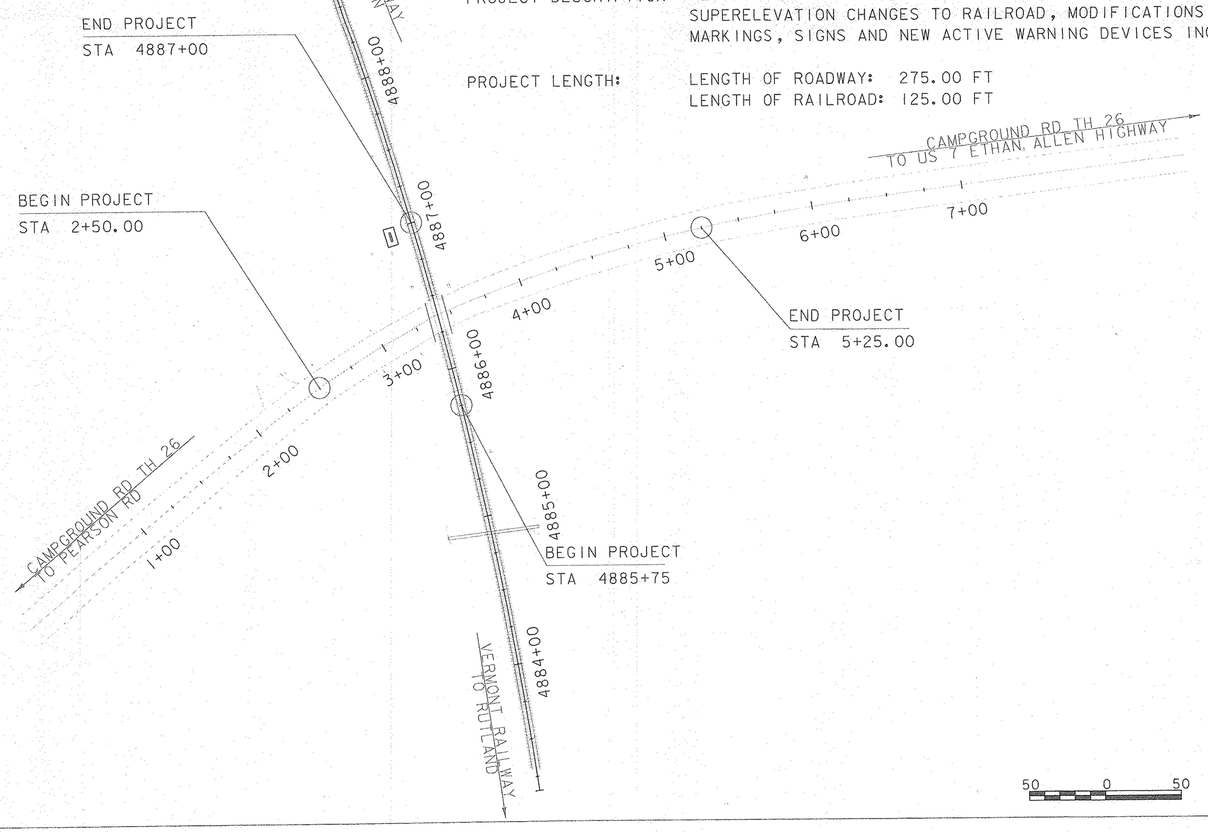

CONSTRUCTION IS TO BE CARRIED ON IN ACCORDANCE WITH THESE PLANS AND THE STANDARD SPECIFICATIONS FOR CONSTRUCTION DATED 2011, AS APPROVED BY THE FEDERAL HIGHWAY ADMINISTRATION ON JULY 20, 2011 FOR USE ON THIS PROJECT, INCLUDING ALL SUBSEQUENT REVISIONS AND SUCH REVISED SPECIFICATIONS AND SPECIAL PROVISIONS AS ARE INCORPORATED IN THESE PLANS.

QUALITY ASSURANCE PROGRAM :	LEVEL 2
SURVEYED BY :	V.S.E.
SURVEYED DATE :	2/8/2016
DATUM	
VERTICAL	NAVD 88
HORIZONTAL	NAD 83 (2011)

STATE OF VERMONT NEIL L. KOLLIOS No. 6046 REGISTERED PROFESSIONAL ENGINEER
2/24/17
HDR ENGINEERING, INC. DATE
TRACK

STATE OF VERMONT CHARLES L. GREGORY NO. 87265 CIVIL LICENSED PROFESSIONAL ENGINEER
2/24/17
HDR ENGINEERING, INC. DATE
CIVIL

RAIL PROGRAM DIRECTOR
APPROVED Andrew Boardman DATE 2/24/17
PROJECT MANAGER : COS GARDNER
PROJECT NAME : NEW HAVEN
PROJECT NUMBER : STP 2035 (19)
SHEET 1 OF 42 SHEETS

Version

STATE OF VERMONT
AGENCY OF TRANSPORTATION

INDEX OF SHEETS

PLAN SHEETS

1	TITLE SHEET
2	INDEX OF SHEETS
3	CONVENTIONAL SYMBOLOGY LEGEND SHEET
4	GENERAL NOTES SHEET
5	ROADWAY TYPICAL SECTIONS SHEET
6	RAILROAD TYPICAL SECTIONS SHEET
7	SURVEY TIE SHEET
8 - 9	QUANTITY SHEET 1-2
10	EARTHWORK SHEET
11	ROADWAY ALIGNMENT SHEET
12	RAILROAD ALIGNMENT SHEET
13	ROADWAY LAYOUT SHEET
14	RAILROAD LAYOUT SHEET
15	PROFILE SHEET
16	EPSC NARRATIVE
17	EPSC EXISTING LAYOUT SHEET
18	EPSC PROPOSED LAYOUT SHEET
19 - 20	EPSC DETAILS SHEET
21	TRAFFIC SIGN/PAVEMENT MARKING SHEET
22	TRAFFIC SIGN SUMMARY SHEET
23 - 24	ROADWAY CROSS SECTION SHEET 1-2
25 - 27	RAILROAD CROSS SECTIONS SHEET 1-3
28	TRAFFIC SIGN DETAILS SHEET
29	CONSTRUCTION APPROACH SIGNING SHEET
30	BORING INFORMATION SHEET
31	BORING LOGS
32	SIGNAL PLANS-INDEX AND REVISIONS
33	SIGNAL PLANS-CROSSING LAYOUT PLAN
34	SIGNAL PLANS-TRACK CONNECTIONS
35	SIGNAL PLANS-GATE CONTROL
36	SIGNAL PLANS-SIGNAL "A" WIRING
37	SIGNAL PLANS-SIGNAL "B" WIRING
38	SIGNAL PLANS-AC POWER DISTRIBUTION
39	SIGNAL PLANS-DC POWER DISTRIBUTION
40	SIGNAL PLANS-HOUSE & RACK LAYOUTS
41	SIGNAL PLANS-WALL LAYOUTS
42	SIGNAL PLANS-TYP. CROSSING SIGNAL

STANDARDS LIST

A-76	STANDARDS FOR TOWN & DEVELOPMENT ROADS	03-03-2003
E-121	STANDARD SIGN PLACEMENT - CONVENTIONAL ROAD	08-08-1995
E-175	POWER DROP STANCHIONS	06-08-2009
E-190	RAILROAD CROSSING SIGNS AND PAVEMENT MARKINGS	06-30-2003
E-193	PAVEMENT MARKING DETAILS	08-18-1995
G-1	STEEL BEAM GUARDRAIL DETAILS (POST, DELINEATOR, TYPICALS)	11-10-2015
G-1D	STEEL BEAM GUARDRAIL DETAILS (END TERMINAL, ANCHOR, MEDIAN)	02-10-2014
RR-1	RAIL CROSSING HIGHWAY STANDARDS PAVED CROSSING FOR GRAVEL OR PAVED	06-01-1994
T-1	TRAFFIC CONTROL GENERAL NOTES	04-25-2016
T-2	TRAFFIC SIGN GENERAL NOTES	04-25-2016
T-10	CONVENTIONAL ROADS CONSTRUCTION APPROACH SIGNING	08-06-2012
T-30	CONSTRUCTION SIGN DETAILS	08-06-2012
T-31	CONSTRUCTION SIGN DETAILS	08-06-2012
T-35	CONSTRUCTION ZONE LONGITUDINAL DROP-OFFS	08-06-2012
T-36	CONSTRUCTION ZONE LONGITUDINAL DROP-OFFS FOR PAVING	08-06-2012
T-45	SQUARE TUBE SIGN POST AND ANCHOR	01-02-2013

TRAFFIC DATA

YEAR	ADT	DHV	% D	% T	ADTT
2017	650	100	63	25.4	110
2037	660	100	63	23.2	100

20 year ESAL for flexible pavement from 2017 to 2037 : 575,000

40 year ESAL for flexible pavement from 2017 to 2057 : 1,062,000

Design Speed : - mph

RAILROAD DATA

EXISTING RAILROAD TRAFFIC	4	UNSCHEDULED FREIGHT TRAINS DAILY
EXISTING SPEED	25	MPH FREIGHT
PROPOSED DESIGN SPEED	59	MPH PASSENGER
	40	MPH FREIGHT

PAVEMENT DESIGN CRITERIA

DESIGN LANE ESAL	2037 - 287,000	2057 - 531,000
DESIGN NUMBER OF GYRATIONS	65	
PG ASPHALT BINDER	58 - 28	

PAVEMENT DESIGN CRITERIA

POSTED SPEED	40 MPH
DESIGN SPEED	- MPH

PROJECT NAME: **NEW HAVEN**

PROJECT NUMBER: **STP 2035 (19)**

FILE NAME: **z13g606ind.xls**
PROJECT LEADER: **R. O'BLENIS**
DESIGNED BY: **W.TSE**
INDEX OF SHEETS

PLOT DATE: 2/15/2017
DRAWN BY: **W. TSE**
CHECKED BY: **R. O'BLENIS**
SHEET 2 OF 42

GENERAL INFORMATION

SYMBOLOGY LEGEND NOTE

THE SYMBOLOGY ON THIS SHEET IS INTENDED TO COVER STANDARD CONVENTIONAL SYMBOLOGY. THE SYMBOLOGY IS USED FOR EXISTING & PROPOSED FEATURES WITH HEAVIER LINEWEIGHT, IN COMBINATION WITH PROJECT ANNOTATION, AS NOTED ON PROJECT PLAN SHEETS. THIS LEGEND SHEET COVERS THE BASICS. SYMBOLOGY ON PLANS MAY VARY, PLAN ANNOTATIONS AND NOTES SHOULD BE USED TO CLARIFY AS NEEDED.

R.O.W. ABBREVIATIONS (CODES) & SYMBOLS

POINT	CODE	DESCRIPTION
	CH	CHANNEL EASEMENT
	CONST	CONSTRUCTION EASEMENT
	CUL	CULVERT EASEMENT
	D&C	DISCONNECT & CONNECT
	DIT	DITCH EASEMENT
	DR	DRAINAGE EASEMENT
	DRIVE	DRIVEWAY EASEMENT
	EC	EROSION CONTROL
	HWY	HIGHWAY EASEMENT
	I&M	INSTALL & MAINTAIN EASEMENT
	LAND	LANDSCAPE EASEMENT
	R&RES	REMOVE & RESET
	R&REP	REMOVE & REPLACE
	SR	SLOPE RIGHT
	UE	UTILITY EASEMENT
	(P)	PERMANENT EASEMENT
	(T)	TEMPORARY EASEMENT
■	BNDNS	BOUND SET
⧈	BNDNS	BOUND TO BE SET
●	IPNS	IRON PIN SET
◎	IPNS	IRON PIN TO BE SET
⊠	CALC	EXISTING ROW POINT
○	PROW	PROPOSED ROW POINT
[LENGTH]		LENGTH CARRIED ON NEXT SHEET

COMMON TOPOGRAPHIC POINT SYMBOLS

POINT	CODE	DESCRIPTION
	APL	BOUND APPARENT LOCATION
	BM	BENCHMARK
	BND	BOUND
	CB	CATCH BASIN
	COMB	COMBINATION POLE
	DITHR	DROP INLET THROATED DNC
	EL	ELECTRIC POWER POLE
	FPOLE	FLAGPOLE
	GASFIL	GAS FILLER
	GP	GUIDE POST
	GSO	GAS SHUT OFF
	GUY	GUY POLE
	GUYW	GUY WIRE
	GV	GATE VALUE
	H	TREE HARDWOOD
	HCTRL	CONTROL HORIZONTAL
	HVCTRL	CONTROL HORIZ. & VERTICAL
	HYD	HYDRANT
	IP	IRON PIN
	IPIPE	IRON PIPE
	LI	LIGHT - STREET OR YARD
	MB	MAILBOX
	MH	MANHOLE (MH)
	MM	MILE MARKER
	PM	PARKING METER
	PMK	PROJECT MARKER
	POST	POST STONE/WOOD
	RRSIG	RAILROAD SIGNAL
	RRSL	RAILROAD SWITCH LEVER
	S	TREE SOFTWOOD
	SAT	SATELLITE DISH
	SHRUB	SHRUB
	SIGN	SIGN
	STUMP	STUMP
	TEL	TELEPHONE POLE
	TIE	TIE
	TSIGN	SIGN W/DOUBLE POST
	VCTRL	CONTROL VERTICAL
	WELL	WELL
	WSO	WATER SHUT OFF

THESE ARE COMMON VAOT SURVEY POINT SYMBOLS FOR EXISTING FEATURES, ALSO USED FOR PROPOSED FEATURES WITH HEAVIER LINEWEIGHT, IN COMBINATION WITH PROPOSED ANNOTATION.

PROPOSED GEOMETRY CODES

CODE	DESCRIPTION
PC	POINT OF CURVATURE
PI	POINT OF INTERSECTION
CC	CENTER OF CURVE
PT	POINT OF TANGENCY
PCC	POINT OF COMPOUND CURVE
PRC	POINT OF REVERSE CURVE
POB	POINT OF BEGINNING
POE	POINT OF ENDING
STA	STATION PREFIX
AH	AHEAD STATION SUFFIX
BK	BACK STATION SUFFIX
D	CURVE DEGREE OF (100FT)
R	CURVE RADUIS OF
T	CURVE TANGENT LENGTH
L	CURVE LENGTH OF
E	CURVE EXTERNAL DISTANCE

UTILITY SYMBOLOGY

UNDERGROUND UTILITIES

- UGU — UTILITY (GENERIC-UNKNOWN)
- UT — TELEPHONE
- UE — ELECTRIC
- UC — CABLE (TV)
- UEC — ELECTRIC+CABLE
- UET — ELECTRIC+TELEPHONE
- UCT — CABLE+TELEPHONE
- UECT — ELECTRIC+CABLE+TELEP.
- G — GAS LINE
- W — WATER LINE
- S — SANITARY SEWER (SEPTIC)

ABOVE GROUND UTILITIES (AERIAL)

- AGU — UTILITY (GENERIC-UNKNOWN)
- T — TELEPHONE
- E — ELECTRIC
- C — CABLE (TV)
- EC — ELECTRIC+CABLE
- ET — ELECTRIC+TELEPHONE
- AER E&T — ELECTRIC+TELEPHONE
- CT — CABLE+TELEPHONE
- ECT — ELECTRIC+CABLE+TELEP.
- UTILITY POLE GUY WIRE

PROJECT CONSTRUCTION SYMBOLOGY

PROJECT DESIGN & LAYOUT SYMBOLOGY

- CZ — CLEAR ZONE
- PLAN LAYOUT MATCHLINE

PROJECT CONSTRUCTION FEATURES

- TOP OF CUT SLOPE
- TOE OF FILL SLOPE
- STONE FILL
- BOTTOM OF DITCH ℄
- CULVERT PROPOSED
- STRUCTURE SUBSURFACE
- PDF — PROJECT DEMARCATION FENCE
- BF — BARRIER FENCE
- TREE PROTECTION ZONE (TPZ)
- STRIPING LINE REMOVAL
- SHEET PILES

CONVENTIONAL BOUNDARY SYMBOLOGY

BOUNDARY LINES

- TOWN LINE — TOWN BOUNDARY LINE
- COUNTY LINE — COUNTY BOUNDARY LINE
- STATE LINE — STATE BOUNDARY LINE
- PROPOSED STATE R.O.W. (LIMITED ACCESS)
- PROPOSED STATE R.O.W.
- STATE ROW (LIMITED ACCESS)
- STATE ROW
- TOWN ROW
- PERMANENT EASEMENT LINE (P)
- TEMPORARY EASEMENT LINE (T)
- SURVEY LINE
- P/L — PROPERTY LINE (P/L)
- SR SR SR — SLOPE RIGHTS
- 6f — 6F PROPERTY BOUNDARY
- 4f — 4F PROPERTY BOUNDARY
- HAZ — HAZARDOUS WASTE

EPSC LAYOUT PLAN SYMBOLOGY

EPSC MEASURES

- FILTER CURTAIN
- SILT FENCE
- SILT FENCE WOVEN WIRE
- CHECK DAM
- DISTURBED AREAS REQUIRING RE-VEGETATION
- EROSION MATTING

SEE EPSC DETAIL SHEETS FOR ADDITIONAL SYMBOLOGY

ENVIRONMENTAL RESOURCES

- WETLAND BOUNDARY
- RIPARIAN BUFFER ZONE
- WETLAND BUFFER ZONE
- SOIL TYPE BOUNDARY
- T&E — THREATENED & ENDANGERED SPECIES
- HAZ — HAZ — HAZARDOUS WASTE AREA
- AG — AGRICULTURAL LAND
- HABITAT — FISH & WILDLIFE HABITAT
- FLOOD PLAIN — FLOOD PLAIN
- OHW — ORDINARY HIGH WATER (OHW)
- STORM WATER
- USDA FOREST SERVICE LANDS
- WILDLIFE HABITAT SUIT/CONN

ARCHEOLOGICAL & HISTORIC

- ARCH — ARCHEOLOGICAL BOUNDARY
- HISTORIC DIST — HISTORIC DISTRICT BOUNDARY
- HISTORIC — HISTORIC AREA
- (H) HISTORIC STRUCTURE

CONVENTIONAL TOPOGRAPHIC SYMBOLOGY

EXISTING FEATURES

- ROAD EDGE PAVEMENT
- ROAD EDGE GRAVEL
- DRIVEWAY EDGE
- DITCH
- FOUNDATION
- FENCE (EXISTING)
- FENCE WOOD POST
- FENCE STEEL POST
- GARDEN
- ROAD GUARDRAIL
- RAILROAD TRACKS
- CULVERT (EXISTING)
- STONE WALL
- WALL
- WOOD LINE
- BRUSH LINE
- HEDGE
- BODY OF WATER EDGE
- LEDGE EXPOSED

PROJECT NAME: NEW HAVEN
PROJECT NUMBER: STP 2035 (19)

FILE NAME: zl3g606forms.dgn
PROJECT LEADER: R. O'BLENIS
DESIGNED BY: W. TSE
CONVENTIONAL SYMBOLOGY LEGEND SHEET

PLOT DATE: 2/15/2017
DRAWN BY: W. TSE
CHECKED BY: R. O'BLENIS
SHEET 3 OF 42

STATE OF VERMONT
AGENCY OF TRANSPORTATION

GENERAL NOTES

1. ALL CONTRACTOR DESIGN, CONSTRUCTION AND FABRICATION SHALL CONFORM TO THE AMERICAN RAILWAY ENGINEERING AND MAINTENANCE OF WAY ASSOCIATION (AREMA) MANUAL FOR RAILWAY ENGINEERING, 2016", THE "STATE OF VERMONT AGENCY OF TRANSPORTATION (VTRANS) STANDARD SPECIFICATIONS FOR CONSTRUCTION, 2011" AND ITS LATEST REVISIONS, AND THE MANUAL ON UNIFORM TRAFFIC CONTROL DEVICES (MUTCD) 2009 AND ITS LATEST REVISIONS.

2. TOWN HIGHWAY 26 CAMPGROUND ROAD TO CLOSE IN AREA OF WORK TO 7 CONTINUOUS DAYS TO TRAFFIC DURING CONSTRUCTION. ALL CONSTRUCTION SHALL BE COMPLETED WITHIN THE 7 DAY WORK WINDOW. NIGHT WORK WILL BE ALLOWED. SEE SPECIAL PROVISION "NOTICE TO BIDDER - REQUIREMENT FOR NIGHT TIME WORK".

3. ROADWAY PROFILE RAISE TO BE ACCOMPLISHED USING A MAXIMUM OF 6" LIFTS.

4. ROADWAY PROFILE SHALL BE RAISED PRIOR TO INSTALLING GRADE CROSSING TRACK PANEL.

5. CONTINUOUS COORDINATION WITH THE RAILROAD OPERATOR, VERMONT RAILWAYS NORTHERN (VTR) SHALL BE REQUIRED DURING CONSTRUCTION. VTR WILL PROVIDE THE CONTRACTOR WITH FLAGGERS FOR THE PROTECTION OF RAILROAD TRAFFIC WHILE WORK IS PERFORMED ON THE RAILROAD ROW. THE CONTRACTOR SHALL NOT ENTER THE RAILROAD RIGHT OF WAY WITHOUT VTR AUTHORIZATION. ALL COSTS FOR RAILROAD FLAGGER PROTECTION AND RAILROAD COORDINATION SHALL BE INCLUDED UNDER ITEM SPECIAL PROVISION 900.615 (MAINTENANCE OF RAILROAD TRAFFIC)(N.A.B.I.) CONTRACTOR SHALL SUBMIT PLAN FOR CONSTRUCTION TO VTR FOR REVIEW AND ACCEPTANCE PRIOR TO INITIATION OF CONSTRUCTION.

6. ACCESS SHALL BE WITHIN THE ROW UNLESS OTHERWISE APPROVED BY THE PROPERTY OWNER(S) AND VTRANS ENVIRONMENTAL PERMITTING. THE CONTRACTOR SHALL COORDINATE DIRECTLY WITH THE PROPERTY OWNER(S) TO OBTAIN WRITTEN APPROVAL FOR LAND USE OUTSIDE THE RIGHT OF WAY. THE CONTRACTOR SHALL SUBMIT COPIES OF WRITTEN PROPERTY AGREEMENTS TO THE ENGINEER. THE CONTRACTOR IS RESPONSIBLE FOR ANY ADDITIONAL PERMITING REQUIRED FOR OUTSIDE THE ROW LAND USE.

7. THE CONTRACTOR SHALL PREVENT CONSTRUCTION DEBRIS FROM ENTERING WATERWAYS, PUBLIC OR PRIVATE PROPERTY, OR TRAVELED WAYS DURING CONSTRUCTION. THE CONTRACTOR IS RESPONSIBLE FOR ANY COSTS ASSOCIATED WITH THE CLEANUP OF DEBRIS OR CONTAMINATION RESULTING FROM THE WORK.

8. EXISTING CONDITIONS AND TOPOGRAPHY SHOWN ON THE DRAWINGS IS FROM AN ACTUAL FIELD SURVEY PERFORMED BY VERMONT SURVEY AND ENGINEERING, INC. CONTRACTOR SHALL BE RESPONSIBLE FOR CONFIRMING ALL EXISTING COMPONENTS IMPACTED BY THE NEW WORK TO ENSURE CONSISTENCY WITH THE PROPOSED MODIFICATIONS TO THE SITE. ALL COSTS ASSOCIATED WITH THIS WORK SHALL BE CONSIDERED INCIDENTAL TO THE CONTRACT ITEMS.

9. CONTRACTOR SHALL EXERCISE EXTREME CARE WHEN EXCAVATING NEAR AND BACKFILLING IN THE VICINITY OF EXISTING UTILITIES, AND SHALL USE HAND EXCAVATION WHERE APPROPRIATE. CONTRACTOR SHALL REPAIR ANY DAMAGE INCURRED DURING CONSTRUCTION TO EXISTING UTILITIES SCHEDULED TO REMAIN AT NO COST TO THE UTILITY, VTRANS OR VTR. THE CONTRACTOR SHALL MAINTAIN ALL EXISTING UTILITIES IN SERVICE AT ALL TIMES. ALL UNDERGROUND UTILITIES SHALL BE RETAINED UNLESS OTHERWISE NOTED OR DIRECTED BY THE ENGINEER.

10. EXISTING COMPONENTS DAMAGED AS A RESULT OF THE WORK BUT INTENDED TO REMAIN IN USE SHALL BE REPAIRED OR REPLACED BY THE CONTRACTOR AS DIRECTED AND APPROVED BY THE ENGINEER AT NO ADDITIONAL EXPENSE TO VTRANS OR VTR.

11. NEW 7"X9"X10'-0" TIES SHALL BE USED IN CROSSING AREA AS SHOWN. TIES IN APPROACH AREAS SHALL BE REPLACED WITH NEW 8'-6" TIES AS DIRECTIED BY THE ENGINEER. TIES REPLACED IN THE APPROACH AREAS SHALL BE PAID SEPARATELY UNDER PAY ITEM 900.620 REMOVAL AND REPLACEMENT OF CROSS TIES.

12. CONTRACTOR SHALL REMOVE THE TRACK, INCLUDING RAIL AND TIES, NECESSARY TO CONSTRUCT TRACK AS SHOWN ON THE PLANS. THE CONTRACTOR SHALL PREPARE THE SUBGRADE, INSTALL GEOTEXTILE UNDER RAILROAD BALLAST, INSTALL THE BALLAST, AND RECONSTRUCT TRACK THAT WAS REMOVED. THE CONTRACTOR SHALL TAMP AND SURFACE THE TRACK TO OBTAIN A SMOOTH TRANSITION BETWEEN THE EXISTING AND PROPOSED TRACK TO THE SATISFACTION OF THE ENGINEER AND THE RAILROAD.

13. THE SUPERELEVATION OF THE RAILROAD THROUGH THE GRADE CROSSING SHALL BE INCREASED AS SHOWN. THE SUPERELEVATION SHALL BE MAINTAINED TO 50 FEET BEYOND EITHER SIDE OF THE CENTERLINE OF THE ROADWAY CROSSING. THE TRANSITION TO MATCH EXISTING SUPERELEVATION OVER A DISTANCE OF 100 FEET. BALLAST WILL BE ADDED BY THE CONTRACTOR AS REQUIRED TO MAINTAIN REQUIRED BALLAST SECTION.

PROJECT NAME:	**NEW HAVEN**
PROJECT NUMBER:	**STP 2035 (19)**
FILE NAME: **z13g606gen.xls**	PLOT DATE: **2/15/2017**
PROJECT LEADER: **R. O'BLENIS**	DRAWN BY: **W.TSE**
DESIGNED BY: **W.TSE**	CHECKED BY: **R. O'BLENIS**
GENERAL NOTES SHEET	SHEET **4** OF **42**

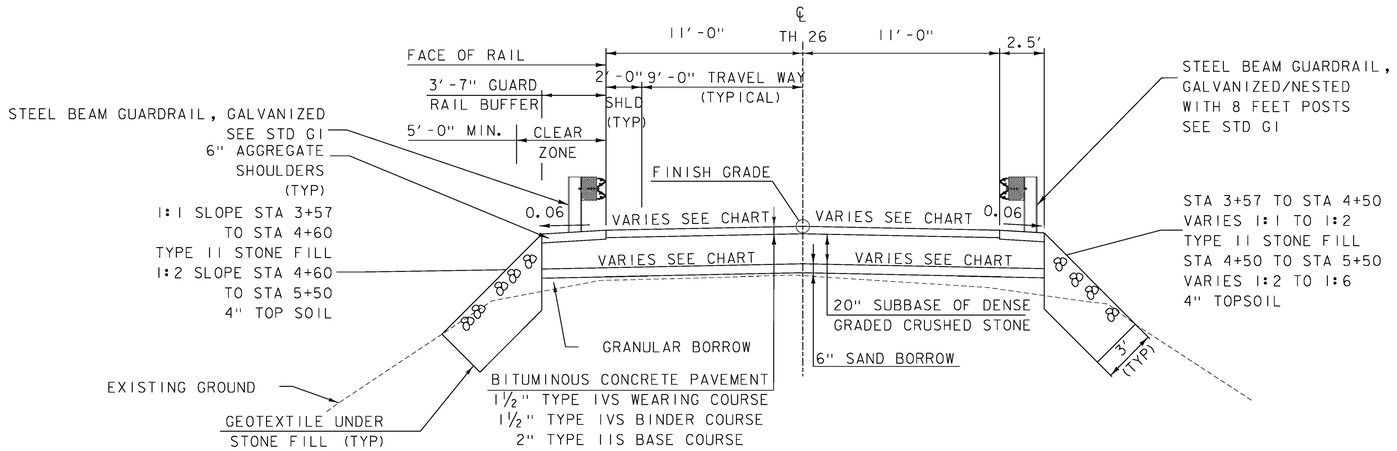

TYPICAL SECTION
STA 3+41 TO 5+50

SCALE: 1/4"=1'-0"

SUPERELEVATION CHART

STA	LT	RT	REMARKS
2+25.00	EXIST	EXIST	
2+50.00	-2.00%	-2.00%	NORMAL SECTION
2+91.15	-2.00%	-2.00%	
3+02.44	-1.20%	-2.00%	
3+25.00	0.40%	-0.40%	FULL SUPERELEVATION
3+50.00	0.40%	-0.40%	FULL SUPERELEVATION
3+72.56	0.40%	-2.00%	
4+00.00	0.40%	-2.00%	
4+33.85	-2.00%	-2.00%	NORMAL SECTION
5+25.00	-2.00%	-2.00%	
5+50.00	EXIST	EXIST	

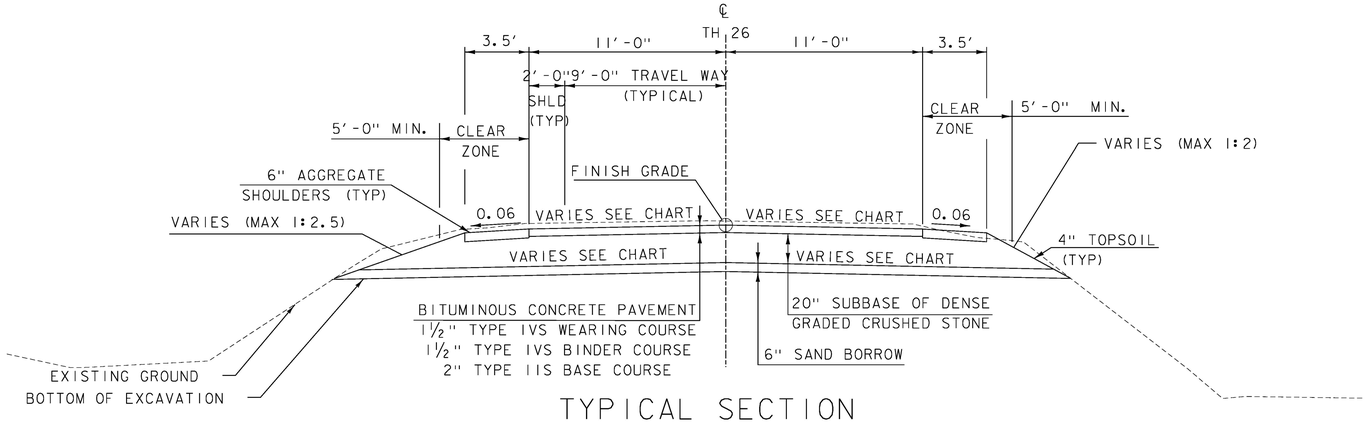

TYPICAL SECTION
STA 2+50 TO 3+41

SCALE: 1/4"=1'-0"

MATERIAL TOLERANCES
(IF USED ON PROJECT)

SURFACE	
- PAVEMENT (TOTAL THICKNESS)	+/- 1/4"
- AGGREGATE SURFACE COURSE	+/- 1/2"
SUBBASE	+/- 1"
SAND BORROWS	+/- 1"

PROJECT NAME: NEW HAVEN
PROJECT NUMBER: STP 2035 (19)

FILE NAME: z13g606typ.dgn
PROJECT LEADER: R. O'BLENIS
DESIGNED BY: W. TSE
ROADWAY TYPICAL SECTIONS SHEET

PLOT DATE: 2/15/2017
DRAWN BY: W. TSE
CHECKED BY: C. GREGORY
SHEET 5 OF 42

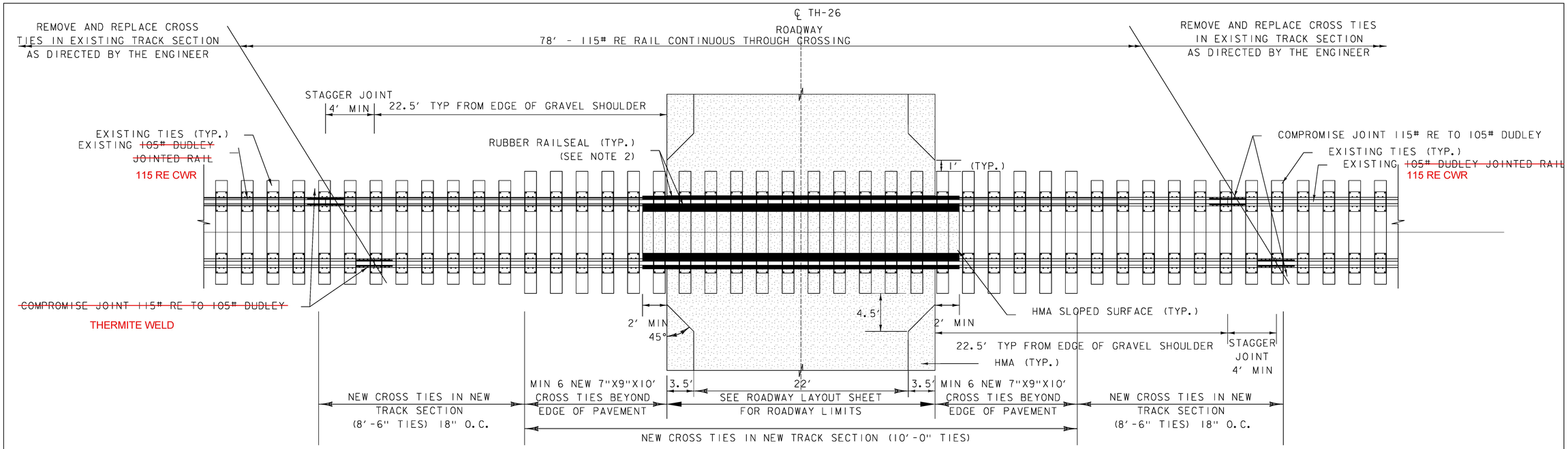

TYPICAL RAILWAY-HIGHWAY GRADE CROSSING PLAN

SCALE: NOT TO SCALE

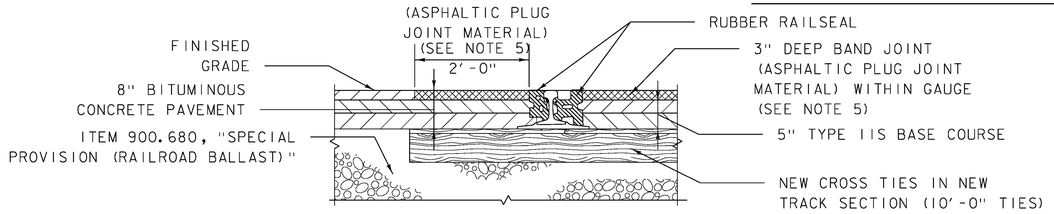

ASPHALT PLUG JOINT

SCALE: NOT TO SCALE

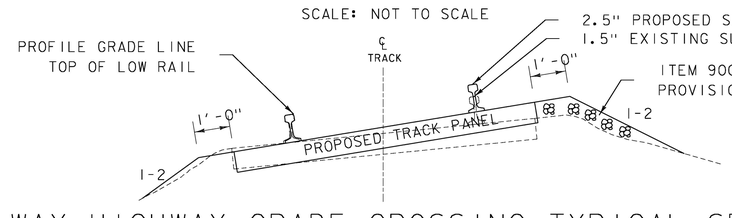

RAILWAY-HIGHWAY GRADE CROSSING TYPICAL SECTION STA 4872+70 TO STA 4885+95 STA 4886+73 TO STA 4896+40

SCALE: NOT TO SCALE

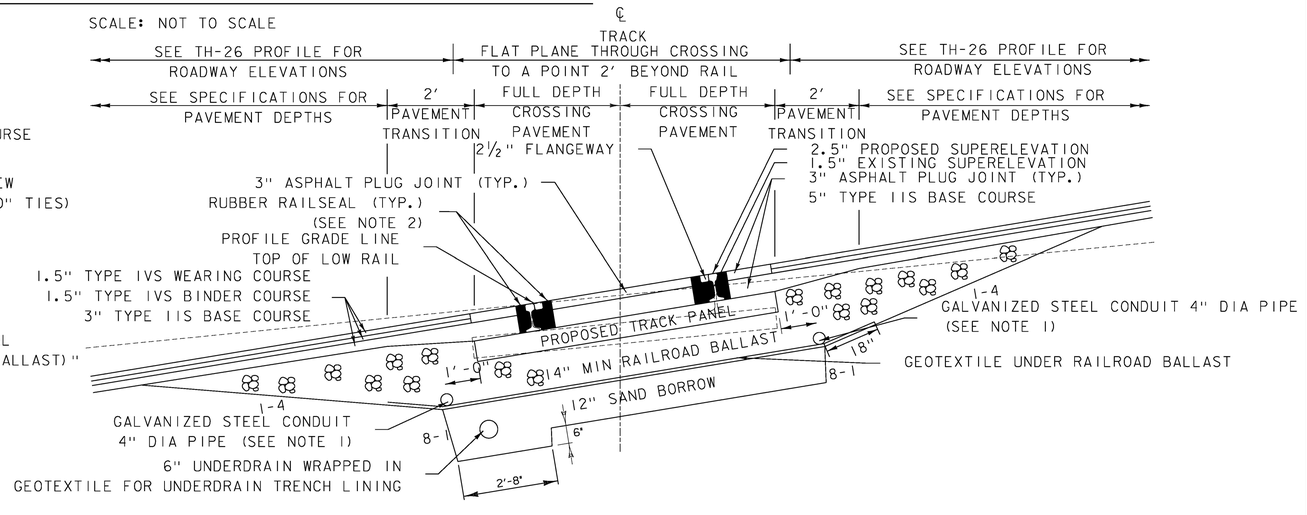

RAILWAY-HIGHWAY GRADE CROSSING TYPICAL SECTION STA 4886+23 TO STA 4886+45

SCALE: NOT TO SCALE

NOTE:

1. GALVANIZED STEEL CONDUIT 4" DIA. PIPE TO BE INSTALLED WITH SECURED END CAPS IN LOCATIONS AS DIRECTED BY THE ENGINEER. PAYMENT FOR ITEM WILL BE CONSIDERED INCIDENTAL TO ITEM 900.645 SPECIAL PROVISION (RECONSTRUCT RAIL-HIGHWAY CROSSING (AARDOT 851-364Y).

2. PAYMENT FOR RUBBER RAILSEAL WILL BE CONSIDERED INCIDENTAL TO ITEM 900.645 SPECIAL PROVISION (RECONSTRUCT RAIL-HIGHWAY CROSSING (AARDOT 851-364Y).

3. INSTALLATION OF TYPE IVS WEARING COURSE AND TYPE IVS BINDER COURSE MAY BE PERFORMED OUTSIDE THE 7 DAY ROAD CLOSURE. CONTRACTOR METHOD TO PROTECT THE GRADE CROSSING, RAIL, AND RUBBER RAILSEAL MUST BE SUPPLIED TO AND APPROVED BY THE ENGINEER.

4. SEE VTRANS STANDARD DRAWING RR-1.

5. THE CONTRACTOR SHALL PLACE A FILLER MATERIAL ALONG RUBBER RAILSEAL UNTIL ASPHALT PLUG JOINTS ARE INSTALLED. CONTRACTOR METHOD FOR FILLER MATERIALS MUST BE SUBMITTED TO AND APPROVED BY THE ENGINEER. PAYMENT WILL BE MADE UNDER ITEM 900.640, SPECIAL PROVISION (ASPHALT PLUG JOINT).

MATERIAL ITEM	TOLERANCE
PAVEMENT	+/- 1/4" TOTAL THICKNESS
ASPHALTIC PLUG JOINT MATERIAL	+/- 1/8"
BALLAST	+/- 1/2"

PROJECT NAME: NEW HAVEN
PROJECT NUMBER: STP 2035 (19)

FILE NAME: zl3g606typ.dgn
PROJECT LEADER: R. O'BLENIS
DESIGNED BY: W. TSE
RAILROAD TYPICAL SECTIONS SHEET

PLOT DATE: 2/15/2017
DRAWN BY: W. TSE
CHECKED BY: R. O'BLENIS
SHEET 6 OF 42

GPS/NGS CONTROL POINTS

MIDDLEBURY CORS ARP

PID DL2744
N = 546895.22
E = 1468689.98
ELLIP HEIGHT = 315.05

STATION IS A GPS CONTINOUSLY OPERATING REFERENCE STATION. STATION IS THE ANTENNA REFERENCE POINT OF THE GPS ANTENNA. LOCATED AT THE MIDDLEBURY MIDDLE SCHOOL IN MIDDLEBURY, VERMONT. THE MONUMENT IS ATTACHED TO A 3 STORY CONCRETE/BRICK BUILDING WITH A 10 FT CONCRETE FOUNDATION BUILT IN 1996. MAST IS A TWO INCH DIA GALV PIPE THAT IS 120 INCHES LONG AND HAS A SMALL CIRLULAR LEVELING DEVICE WELDED TO THE TOP. THE MAST IS WELDED TO 3 OUTRIGGERS AND MOUNTING PLATES ARE WELDED TO THE END OF EACH OUTRIGGER. EACH MOUNTING PLATE CONTAINS 4 ATTACHMENT POINTS CONSISTING OF 1/2 INCH DIA HOLES. ATTACHMENTS ARE EITHER MADE BY THROUGH BOLTING WITH WITH 1/2 INCH STAINLESS STEEL ROD, WASHERS, AND NUTS OR 1/2 INCH STAINLESS STEEL LAGS WITH LEAD ANCHORS. THE TOP PLATE IS SECURED WITH ONE THROUGH BOLT AND 3 ANCHORS. THE MIDDLE PLATE IS SECURED WITH 2 THROUGH BOLTS AND 2 ANCHORS. THE BOTTOM PLATE IS SECURED WITH 2 THROUGH BOLTS AND 2 ANCHORS.

V 17

PID PG0794
N = 577646.02
E = 1461042.84
ELEV. = 326.96

RECOVERY NOTE BY VERMONT GEODETIC SURVEY 1996 (CHR). GENERAL LOCATION, NEW HAVEN, VT. TO REACH FROM THE INTERSECTION OF U.S.ROUTE 7 AND VT ROUTE 17 EAST IN NEW HAVEN JUNCTION GO SOUTH ALONG U.S.ROUTE 7 FOR 2.5 MI (4.0 KM) TO THE INTERSECTION OF CAMPGROUND ROAD RIGHT. TURN RIGHT AND GO WEST ALONG CAMPGROUND ROAD FOR 0.3 MI (0.5 KM) TO THE INTERSECTION OF THE VERMONT RAILWAY. PARK VEHICLE AND WALK SOUTH ALONG THE RAILROAD FOR ABOUT 143 M (469.2 FT) TO THE SITE OF THE MARK ON THE RIGHT. THE MARK IS SET IN THE TOP OF A 15 CM SQUARE CONCRETE MONUMENT WHICH PROJECTS ABOUT 0.2 M (0.7 FT) ABOVE GROUND SURFACE. IT IS 142.6 M (467.8 FT) SOUTH OF THE INTERSECTION OF CAMPGROUND ROAD, 7.7 M (25.3 FT) WEST OF THE WEST RAIL, 3.8 M (12.5 FT) EAST OF THE RIGHT OF WAY FENCE, AND 0.3 M (1.0 FT) SOUTHEAST OF A METAL WITNESS POST.

TRAVERSE TIES

HVCTRL #1 5/8"REBAR SET FLUSH YELLOW VSE CONTROL CAP
NORTH = 578803.46
EAST = 1461432.76
ELEV. = 351.96

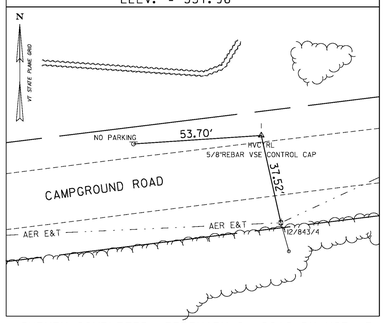

HVCTRL #2 5/8"REBAR SET FLUSH YELLOW VSE CONTROL CAP
NORTH = 578684.45
EAST = 1461003.19
ELEV. = 332.13

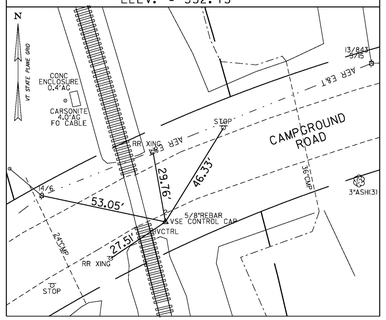

* SURVEY COMPLETED: FEBRUARY 8, 2016 BY VSE, R. GAUVIN-PC, T. YEFCHAK

ALIGNMENT TIES

DATUM
VERTICAL NAVD 88 FT
HORIZONTAL NAD 83(2011) sFT
ADJUSTMENT N/A

VERMONT SURVEY AND ENGINEERING

PROJECT NAME: NEW HAVEN
PROJECT NUMBER: STP 2035 (19)

FILE NAME: zl3g606ti.dgn
PROJECT LEADER: R. O'BLENIS
DESIGNED BY: W. TSE
SURVEY TIE SHEET

PLOT DATE: 2/15/2017
DRAWN BY: W. TSE
CHECKED BY: R. O'BLENIS
SHEET 7 OF 42

STATE OF VERMONT
AGENCY OF TRANSPORTATION

QUANTITY SHEET 1

SUMMARY OF ESTIMATED QUANTITIES				TOTALS		DESCRIPTIONS				DETAILED SUMMARY OF QUANTITIES		
ROADWAY	EROSION CONTROL	RAILROAD	FULL C.E. ITEMS	GRAND TOTAL	FINAL	UNIT	ITEMS	ITEM NUMBER	ROUND	QUANTITIES	UNIT	ITEMS
1				1		LS	CLEARING AND GRUBBING, INCLUDING INDIVIDUAL TREES AND STUMPS	201.10				
700				700		CY	COMMON EXCAVATION	203.15	12			
180				180		CY	SAND BORROW	203.31				
35				35		CY	GRANULAR BORROW	203.32	2			
1				1		CY	TRENCH EXCAVATION OF EARTH, EXPLORATORY (N.A.B.I.)	204.22				
500				500		CY	SUBBASE OF DENSE GRADED CRUSHED STONE	301.35	19			
75				75		TON	AGGREGATE SHOULDERS	402.12	3			
1				1		LU	PRICE ADJUSTMENT, ASPHALT CEMENT (N.A.B.I.)	406.50				
80				80		LF	6 INCH UNDERDRAIN PIPE	605.10	2			
2				2		MGAL	DUST CONTROL WITH WATER	609.10				
320				320		CY	STONE FILL, TYPE II	613.11				
200				200		LF	STEEL BEAM GUARDRAIL, GALVANIZED	621.20	8			
175				175		LF	STEEL BEAM GUARDRAIL, GALVANIZED/NESTED W/8 FEET POSTS	621.207	3			
4				4		EACH	ANCHOR FOR STEEL BEAM RAIL	621.60				
			1	1		LS	FIELD OFFICE, ENGINEERS	631.10				
			1	1		LS	TESTING EQUIPMENT, CONCRETE	631.16				
			1	1		LS	TESTING EQUIPMENT, BITUMINOUS	631.17				
			3000	3000		DL	FIELD OFFICE TELEPHONE (N.A.B.I.)	631.26				
1				1		LS	MOBILIZATION/DEMOBILIZATION	635.11				
2				2		EACH	PORTABLE CHANGEABLE MESSAGE SIGN	641.15				
1200				1200		LF	DURABLE 4 INCH YELLOW LINE	646.410				
		2		2		EACH	DURABLE RAILROAD CROSSING SYMBOL	646.510				
		80		80		SY	GEOTEXTILE UNDER RAILROAD BALLAST	649.21	3			
240				240		SY	GEOTEXTILE UNDER STONE FILL	649.31				
15				15		SY	GEOTEXTILE FOR UNDERDRAIN TRENCH LINING	649.41	3			
	150			150		SY	GEOTEXTILE FOR SILT FENCE, WOVEN WIRE REINFORCED	649.515	5			
	5			5		LB	SEED	651.15	1			
	35			35		LB	FERTILIZER	651.18	4			
	1			1		TON	AGRICULTURAL LIMESTONE	651.20				
	1			1		TON	HAY MULCH	651.25				
	35			35		CY	TOPSOIL	651.35	1			
	1			1		LS	EPSC PLAN	652.10				
	50			50		HR	MONITORING EPSC PLAN	652.20				
	1			1		LU	MAINTENANCE OF EPSC PLAN (N.A.B.I.)	652.30				
	10			10		CY	VEHICLE TRACKING PAD	653.35				
33				33		SF	TRAFFIC SIGNS, TYPE A	675.20				
30				30		LF	SQUARE TUBE SIGN POST AND ANCHOR	675.341				
6				6		EACH	REMOVING SIGNS	675.50				
		22000		22000		DL	SPECIAL PROVISION (MAINTENANCE OF RAILROAD TRAFFIC) (N.A.B.I.)	900.615				
		1		1		EACH	SPECIAL PROVISION (CPM SCHEDULE)	900.620				

PROJECT NAME: NEW HAVEN
PROJECT NUMBER: STP 2035 (19)

FILE NAME: z13g606qty.xls
PROJECT LEADER: R. O'BLENIS
DESIGNED BY: W. TSE
QUANTITY SHEET #1

PLOT DATE: 02/17/2017
DRAWN BY: W. TSE
CHECKED BY: R. O'BLENIS
SHEET 8 OF 42

STATE OF VERMONT
AGENCY OF TRANSPORTATION

QUANTITY SHEET 2

SUMMARY OF ESTIMATED QUANTITIES											TOTALS		DESCRIPTIONS				DETAILED SUMMARY OF QUANTITIES		
								ROADWAY	EROSION CONTROL	RAILROAD	GRAND TOTAL	FINAL	UNIT	ITEMS	ITEM NUMBER	ROUND	QUANTITIES	UNIT	ITEMS
										90	90		EACH	SPECIAL PROVISION (REMOVAL AND REPLACEMENT OF CROSS TIES IN EXISTING TRACK SECTION)	900.620				
										27	27		EACH	SPECIAL PROVISION (REMOVAL AND REPLACEMENT OF CROSS TIES IN NEW TRACK SECTION) (7"X9"X10'-0" TIES)	900.620				
										31	31		EACH	SPECIAL PROVISION (REMOVAL AND REPLACEMENT OF CROSS TIES IN NEW TRACK SECTION) (7"X9"X8'-6" TIES)	900.620				
								22			22		LF	SPECIAL PROVISION (ASPHALT PLUG JOINT)	900.640				
										350	350		LF	SPECIAL PROVISION (SURFACE AND ALIGN RAILROAD TRACKS)	900.640				
										1	1		LS	SPECIAL PROVISION (RAIL-HIGHWAY CROSSING ACTIVE WARNING SYSTEM)	900.645				
										1	1		LS	SPECIAL PROVISION (RECONSTRUCT RAIL-HIGHWAY CROSSING) (AARDOT 851-364Y)	900.645				
								1			1		LS	SPECIAL PROVISION (TRAFFIC CONTROL, ALL-INCLUSIVE)	900.645				
								1			1		LU	SPECIAL PROVISION (MAT DENSITY PAY ADJUSTMENT, SMALL QUANTITY) (N.A.B.I.)	900.650				
								1			1		LU	SPECIAL PROVISION (MIXTURE PAY ADJUSTMENT) (N.A.B.I.)	900.650				
								160			160		TON	SPECIAL PROVISION (BITUMINOUS CONCRETE PAVEMENT, SMALL QUANTITY)	900.680				
										150	150		TON	SPECIAL PROVISION (RAILROAD BALLAST)	900.680				

PROJECT NAME: NEW HAVEN
PROJECT NUMBER: STP 2035 (19)

FILE NAME: z13g606qty.xls
PROJECT LEADER: R. O'BLENIS
DESIGNED BY: W. TSE
QUANTITY SHEET #2

PLOT DATE: 02/15/2017
DRAWN BY: W. TSE
CHECKED BY: R. O'BLENIS

STATE OF VERMONT
AGENCY OF TRANSPORTATION

EARTHWORKS

STATION	DIST	TOTAL EXCAVATION EARTH AND ROCK AREA	TOTAL EXCAVATION EARTH AND ROCK VOLUME	ROCK EXCAVATION AREA	ROCK EXCAVATION VOLUME	EMBANKMENT AREA	EMBANKMENT VOLUME		
	FT.	S.F.	C.Y.	S.F.	C.Y.	S.F.	C.Y.	S.F.	C.Y.
2+25		9		0		0			
	25		8						
2+50		76		0		2			
	50		163				2		
3+00		100		0		0			
	50		167						
3+50		80		0		0			
	50		96				12		
4+00		24		0		13			
	50		50				12		
4+50		30		0		0			
	50		107						
5+00		86		0		0			
	25		83						
5+25		93		0		0			
	25		11						
5+50		12		0		0			
4884+00		0		0		0			
	100		0						
4885+00		0		0		0			
	100		0				0		
4886+00		0		0		0			
	100		0				0		
4887+00		0		0		0			
	100		0				0		
4888+00		0		0		0			
4886+89		5		0		5			
	12		2				2		
4887+01		5		0		5			

STATION	DIST	TOTAL EXCAVATION EARTH AND ROCK AREA	TOTAL EXCAVATION EARTH AND ROCK VOLUME	ROCK EXCAVATION AREA	ROCK EXCAVATION VOLUME	EMBANKMENT AREA	EMBANKMENT VOLUME		
	FT.	S.F.	C.Y.	S.F.	C.Y.	S.F.	C.Y.	S.F.	C.Y.

STATION	DIST	TOTAL EXCAVATION EARTH AND ROCK AREA	TOTAL EXCAVATION EARTH AND ROCK VOLUME	ROCK EXCAVATION AREA	ROCK EXCAVATION VOLUME	EMBANKMENT AREA	EMBANKMENT VOLUME		
	FT.	S.F.	C.Y.	S.F.	C.Y.	S.F.	C.Y.	S.F.	C.Y.

SUMMARY AND BALANCES

STATION TO STATION		TOT EXC. EARTH & ROCK C.Y.	ROCK EXCAV C.Y.	EMBANK C.Y.	EXCESSES CUT	EXCESSES FILL	ACUMULATIVE EXCESSES CUT	ACUMULATIVE EXCESSES FILL
2+50	5+50	686	0	27	686		686	
4884+00	4888+00	2	0	2	2		2	

REMARKS

EARTH AND ROCK EXCAVATION	688	
SOLID ROCK EXCAVATION	0	
EARTH EXCAVATION	688	
PLANIMETERED FILL	29	
LESS FACTORED SOLID ROCK	0	
LESS DISPLACEMENT OF ANY LARGE STRUCTURES	0	
NET PLANIMETERED FILL	29	
FACTOR	1.15	
PLANIMETERED FILL INCLUDING FACTOR	33.35	
MATERIALS AVAILABLE FOR FILLS	0	
EARTH EXCAVATION	688	
CHANNEL EXCAVATION	0	
UNDERDRAIN EXCAVATION	0	
STRUCTURE EXCAVATION	0	
TOTAL MATERIAL AVAILABLE FOR FILL	688	
TOTAL FILL INCLUDING FACTOR	33.35	
TOTAL MATERIAL FOR FILL	688	
BORROW (GRANULAR)	33.35	
EXCESS EXCAVATION (ALL EXCESS)	688	

PROJECT NAME: **NEW HAVEN**
PROJECT NUMBER: **STP 2035 (19)**

FILE NAME: **z13g606ew3.xls**
PROJECT LEADER: **R. O'BLENIS**
DESIGNED BY: **W.TSE**
EARTHWORK SHEET

PLOT DATE: **2/15/2017**
DRAWN BY: **W.TSE**
CHECKED BY: **R. O'BLENIS**
SHEET **10** OF **42**

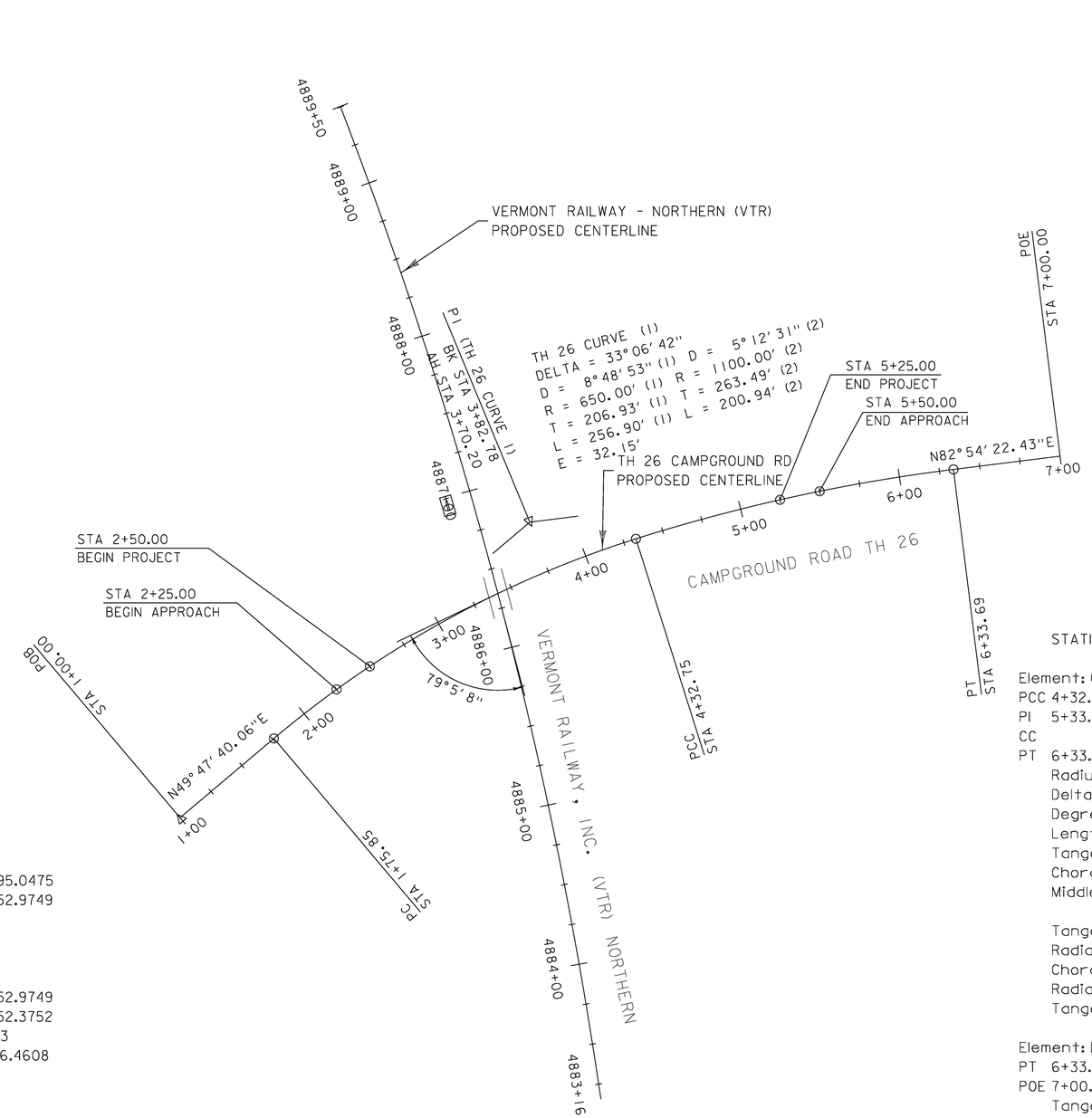

TH-26 CAMPGROUND RD

STATION	NORTHING	EASTING
Element: Linear		
POB 1+00.00	578553.7370	1460795.0475
PC 1+75.85	578602.6989	1460852.9749
Tangent Direction:	N 49^47'40.06" E	
Tangent Length:	75.85	
Element: Circular		
PC 1+75.85	578602.6989	1460852.9749
PI 3+06.00	578686.7152	1460952.3752
CC	578106.2721	1461272.5703
PCC 4+32.75	578725.9825	1461076.4608
Radius:	650.00	
Delta:	22^38'43.38" Right	
Degree of Curvature(Arc):	8^48'53.05"	
Length:	256.90	
Tangent:	130.15	
Chord:	255.23	
Middle Ordinate:	12.65	
External:	12.90	
Tangent Direction:	N 49^47'40.06" E	
Radial Direction:	S 40^12'19.94" E	
Chord Direction:	N 61^07'01.75" E	
Radial Direction:	S 17^33'36.56" E	
Tangent Direction:	N 72^26'23.44" E	

STATION	NORTHING	EASTING
Element: Circular		
PCC 4+32.75	578725.9825	1461076.4608
PI 5+33.50	578756.3796	1461172.5164
CC	577677.2418	1461408.3385
PT 6+33.69	578768.8217	1461272.4956
Radius:	1100.00	
Delta:	10^27'58.99" Right	
Degree of Curvature(Arc):	5^12'31.35"	
Length:	200.94	
Tangent:	100.75	
Chord:	200.66	
Middle Ordinate:	4.59	
External:	4.60	
Tangent Direction:	N 72^26'23.44" E	
Radial Direction:	S 17^33'36.56" E	
Chord Direction:	N 77^40'22.94" E	
Radial Direction:	S 7^05'37.57" E	
Tangent Direction:	N 82^54'22.43" E	
Element: Linear		
PT 6+33.69	578768.8217	1461272.4956
POE 7+00.00	578777.0103	1461338.2965
Tangent Direction:	N 82^54'22.43" E	
Tangent Length:	66.31	

SCALE 1" = 40'-0"
40 0 40

PROJECT NAME:	NEW HAVEN
PROJECT NUMBER:	STP 2035 (19)
FILE NAME:	z13g606bdr_aln.dgn
PROJECT LEADER:	R. O'BLENIS
DESIGNED BY:	W.TSE
ROADWAY ALIGNMENT SHEET	
PLOT DATE:	2/15/2017
DRAWN BY:	W. TSE
CHECKED BY:	C. GREGORY
SHEET	11 OF 42

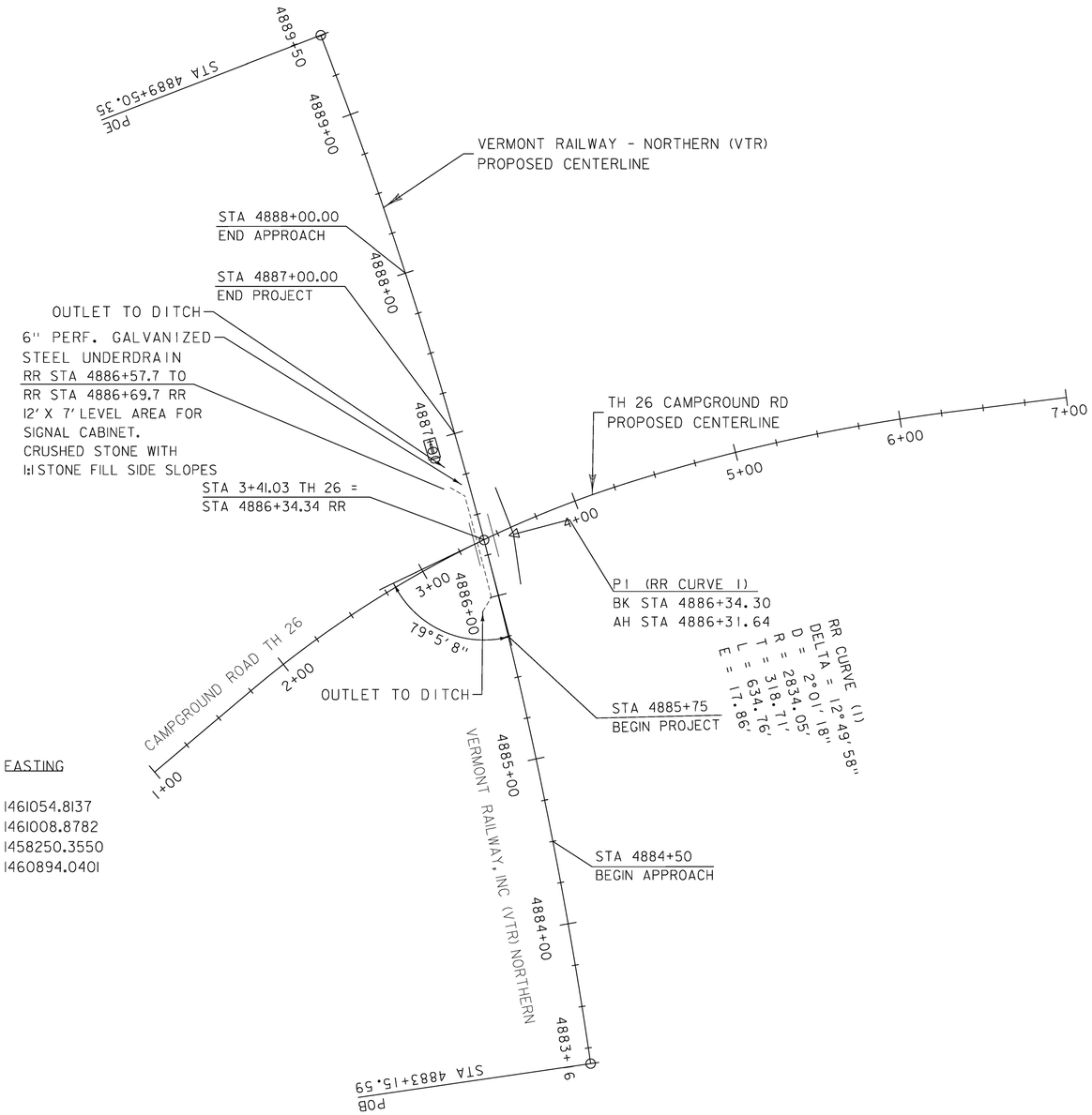

VERMONT RAILWAYS - NORTHERN (VTR)

	STATION	NORTHING	EASTING
Element:	Circular		
POB	4883+15.59	578380.0684	1461054.8137
PI	4886+34.30	578695.4545	1461008.8782
CC		577971.6031	1458250.3550
POE	4889+50.35	578992.7603	1460894.0401
	Radius:	2834.05	
	Delta:	12^49'58.49" Left	
	Degree of Curvature(Chord):	2^01'18.47"	
	Length:	634.76	
	Tangent:	318.71	
	Chord:	633.43	
	Middle Ordinate:	17.75	
	External:	17.86	
	Tangent Direction:	N 8^17'12.39" W	
	Radial Direction:	N 81^42'47.61" E	
	Chord Direction:	N 14^42'11.64" W	
	Radial Direction:	N 68^52'49.11" E	
	Tangent Direction:	N 21^07'10.89" W	

PASSENGER		FREIGHT	
EXISTING	PROPOSED	EXISTING	PROPOSED
N/A	V = 59 MPH	V = 25 MPH	V = 40 MPH
	Ea = 2.5"	Ea = 1.5"	Ea = 2.5"
	Eu = 2.37"	Eu = -0.62"	Eu = 0.74"

SCALE 1" = 40'-0"
40 0 40

PROJECT NAME:	NEW HAVEN
PROJECT NUMBER:	STP 2035 (19)

FILE NAME: z13g606bdr_aln.dgn	PLOT DATE: 2/15/2017
PROJECT LEADER: R. O'BLENIS	DRAWN BY: W. TSE
DESIGNED BY: W.TSE	CHECKED BY: R. O'BLENIS
RAILROAD ALIGNMENT SHEET	SHEET 12 OF 42

CAMPGROUND ROAD DOT CROSSING NUMBER 851364Y

STEEL BEAM GUARDRAIL, GALZANIZED, ITEM 621.20
STA 3+58.00 - STA 5+50.00 LT

STEEL BEAM GUARDRAIL, GALZANIZED/NESTED W/ 8 FEET POSTS, ITEM 621.207
STA 3+53.50 - STA 5+25.00 RT

STONE FILL TYPE II, ITEM 613.11
STA 3+55.00 - 5+00.00 LT
STA 3+46.00 - 4+50.00 RT

ANCHOR FOR STEEL BEAM RAIL, ITEM 621.60
STA 3+65.00 RT
STA 3+70.00 LT
STA 5+15.00 RT
STA 5+39.00 LT

NOTES:
1. FOR LIMITS OF TYPES OF ROADWAY RECONSTRUCTION, SEE ROADWAY TYPICAL SECTIONS SHEET 5.
2. FOR ROADWAY PROFILE SEE SHEET 15.
3. FOR ROADWAY GEOMETRY DATA SEE SHEET 11.
4. CONTRACTOR SHALL VERIFY THAT POST FOR FLASHER AND GATES IS 12' MIN. FROM CENTERLINE OF TRACK.
5. CONTRACTOR SHALL VERIFY THAT CROSSING GATES WHEN LOWERED ARE MINIMUM OF 12' FROM CENTERLINE OF TRACK.
6. CONTRACTOR TO PROTECT EXISTING BURIED CABLE IN PLACE.
7. FOR LIMITS OF ROADWAY SUPERELEVATION, SEE ROADWAY TYPICAL SECTIONS SHEET 5.

N

VT STATE PLANE GRID

EXISTING RAILROAD R.O.W.

STA 3+41.03 TH 26 =
STA 4886+34.34 RR

POB
STA 1+00.00

2+67.00
STA ~~2+50.00~~
BEGIN PROJECT

LIMITS OF CONSTRUCTION

~~STA 2+25.00~~
~~BEGIN APPROACH~~

EXISTING TOWN R.O.W.

N49° 47' 40.06"E

1+00 2+00 3+00 4+00 5+00 6+00 7+00

REMOVE TREE
STA 1+29.66

EXISTING TOWN R.O.W.

PC
STA 1+75.85

STA 3+25.37
FLASHER/GATE MAST ARM
OFFSET FROM ℄ TH 26 TO ℄ MAST ARM: 19.5'

19.5'

4886+00
4887+00
4885+00
4884+00

PI TH 26 CURVE (1)
BK STA 3+82.18
AH STA 3+70.20

TH 26 CURVE (1)
DELTA = 33° 06' 42"
D = 8° 48' 53" (1) D = 5° 12' 31" (2)
R = 650.00' (1) R = 1100.00' (2)
T = 206.93' (1) T = 263.49' (2)
L = 256.90' (1) L = 200.94' (2)
E = 32.15'

STA 3+56.40
FLASHER/GATE MAST ARM
OFFSET FROM ℄ TH 26 TO ℄ MAST ARM: 19.5'
STONE FILL, TYPE II

LIMITS OF CROSSING
3+27
3+55

EXISTING TOWN R.O.W.

STA 5+25.00
END PROJECT

STA 5+50.00
END APPROACH

PCC
STA 4+32.75

EXISTING TOWN R.O.W.

LIMITS OF CONSTRUCTION
STONE FILL, TYPE II

AER ABRT EAST

POE
STA 7+00.00

N82° 54' 22.43"E

PT
STA 6+33.69

EXISTING RAILROAD R.O.W.

EXISTING RAILROAD R.O.W.

SCALE 1" = 20'-0"
20 0 20

PROJECT NAME:	NEW HAVEN
PROJECT NUMBER:	STP 2035 (19)
FILE NAME: zl3g606bdr.dgn	PLOT DATE: 2/15/2017
PROJECT LEADER: R. O'BLENIS	DRAWN BY: W. TSE
DESIGNED BY: W. TSE	CHECKED BY: C. GREGORY
ROADWAY LAYOUT SHEET	SHEET 13 OF 42

CAMPGROUND ROAD DOT CROSSING NUMBER 851364Y

ITEM 900.645 RECONSTRUCT RAIL-HIGHWAY CROSSING (AARDOT#851-364Y)
ASPHALT AND RUBBER GRADE CROSSING SURFACE
STA 4886+20.06 - STA 4886+48.58

TRACK SURFACING RAISE TO 2.5" SUPERELEVATION
STA 4885+75 - STA 4887+00

TRANSITION FROM EXISTING (1.5") SUPERELEVATION TO 2.5" SUPERELEVATION
STA 4885+10 - STA 4885+75

TRANSITION FROM 2.5" TO 1.5" SUPERELEVATION
STA 4887+00 - STA 4887+65

78' - 115# GRADE CROSSING TRACK PANEL CONTINUOUS RAIL THROUGH CROSSING
STA 4885+95 - STA 4886+73

6" GALVANIZED STEEL UNDERDRAIN
STA 4885+92 - STA 4886+82 LT

4" GALVANIZED STEEL CONDUIT
STA 4886+23 - STA 4886+45 LT
STA 4886+23 - STA 4886+45 RT

ITEM 900.645 RAIL-HIGHWAY ACTIVE WARNING SYSTEM

FLASHERS AND GATES
STA 3+25 AND STA 3+56
OFFSET FROM RAIL CL: 19.5 LF

SIGNAL CABINET
STA 4886+89 - STA 4887+01
OFFSET FROM RAIL CL: 12 LF

RR CURVE (1)
DELTA = 12°49'58"
D = 2°01'18"
R = 2834.05'
T = 318.71'
L = 634.76'
E = 17.86'

LIMITS OF CROSSING
3+27
3+55

N
VT STATE PLANE GRID

EXISTING TOWN R.O.W.
EXISTING TOWN R.O.W.
5+00
4+00
EXISTING RAILROAD R.O.W.
EXISTING RAILROAD R.O.W.
STA 3+56.40
FLASHER/GATE MAST ARM
OFFSET: 19.5'
6" PERF. GALVANIZED STEEL UNDERDRAIN
OUTLET TO DITCH
PI (RR CURVE 1)
BK STA 4886+34.30
AH STA 4886+31.64
LIMITS OF CONSTRUCTION
LIMITS OF CONSTRUCTION
4888+00
4887+00
4886+00
4885+00
4884+00
4889+50
4889+00
4883+16
STA 4888+00.00
END APPROACH
STA 4887+00.00
END PROJECT
STA 4885+75
BEGIN PROJECT
STA 4884+50
BEGIN APPROACH
3+00
79°58"
OUTLET TO DITCH
EXISTING RAILROAD R.O.W.
RR STA 4886+88.9 TO
RR STA 4887+00.9 RR
12' X 7' LEVEL AREA FOR
SIGNAL CABINET.
6" CRUSHED STONE WITH
1:1 STONE FILL SIDE SLOPES
STA 3+25.37
FLASHER/GATE MAST ARM
OFFSET: 19.5'
GALVANIZED
STEEL CONDUIT
4" DIA PIPE
STA 3+41.03 TH 26 =
STA 4886+34.34 RR
2+00
EXISTING TOWN R.O.W.
EXISTING TOWN R.O.W.
STA 4889+50.35
POE
STA 4883+15.59
POB

US DOT NO. 851364Y

NOTES:
1. FOR LIMITS OF TYPES OF RAILROAD RECONSTRUCTION, SEE RAILROAD TYPICAL SECTIONS SHEET 6.
2. FOR RAILROAD PROFILE SEE SHEET 15.
3. FOR RAILROAD GEOMETRY DATA SEE SHEET 12.
4. CONTRACTOR SHALL VERIFY THAT POST FOR FLASHER AND GATES IS 12' MIN. FROM CENTERLINE OF TRACK.
5. CONTRACTOR SHALL VERIFY THAT CROSSING GATES WHEN LOWERED ARE MINIMUM OF 12' FROM CENTERLINE OF TRACK.
6. CONTRACTOR TO PROTECT EXISTING BURIED COMMUNICATIONS CABLE IN PLACE.
7. LOCATION OF POWER SUPPLY CONDUITS AND SIGNAL CONDUITS TO BE DETERMINED IN FIELD. SEPARATE PAYMENT WILL NOT BE MADE FOR THIS WORK, BUT SHALL BE INCIDENTAL TO ITEM 900.645 SPECIAL PROVISION (RAIL-HIGHWAY CROSSING ACTIVE WARNING SYSTEM) (AARDOT 851-364Y).
8. POWER SERVICE FOR SIGNAL CABINET SHALL BE CONSTRUCTED WITHIN EXISTING R.O.W. AND OUTSIDE ANY KNOWN WETLAND LIMITS.

SCALE 1" = 20'-0"
20 0 20

HDR

PROJECT NAME: NEW HAVEN	
PROJECT NUMBER: STP 2035 (19)	
FILE NAME: zi3g606bdr.dgn	PLOT DATE: 2/15/2017
PROJECT LEADER: R. O'BLENIS	DRAWN BY: W. TSE
DESIGNED BY: W.TSE	CHECKED BY: R. O'BLENIS
RAILROAD LAYOUT SHEET	SHEET 14 OF 42

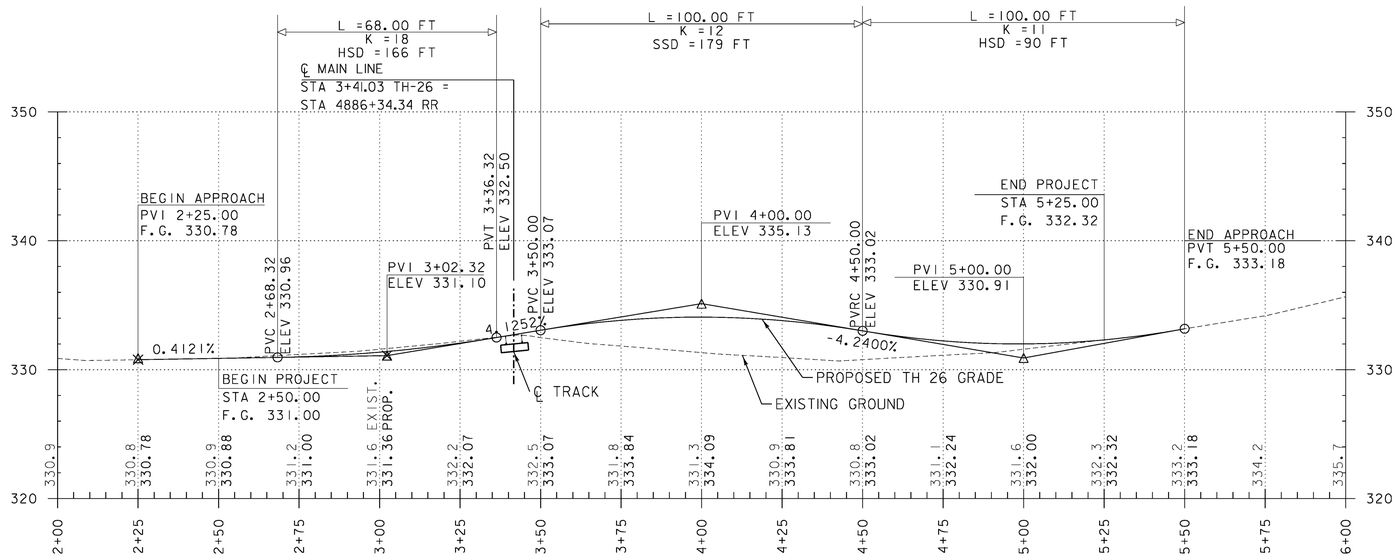

TH 26 (CAMPGROUND RD) PROFILE

HORIZONTAL SCALE: 1" = 20' VERTICAL SCALE: 1" = 5' (22X34 SHEET)

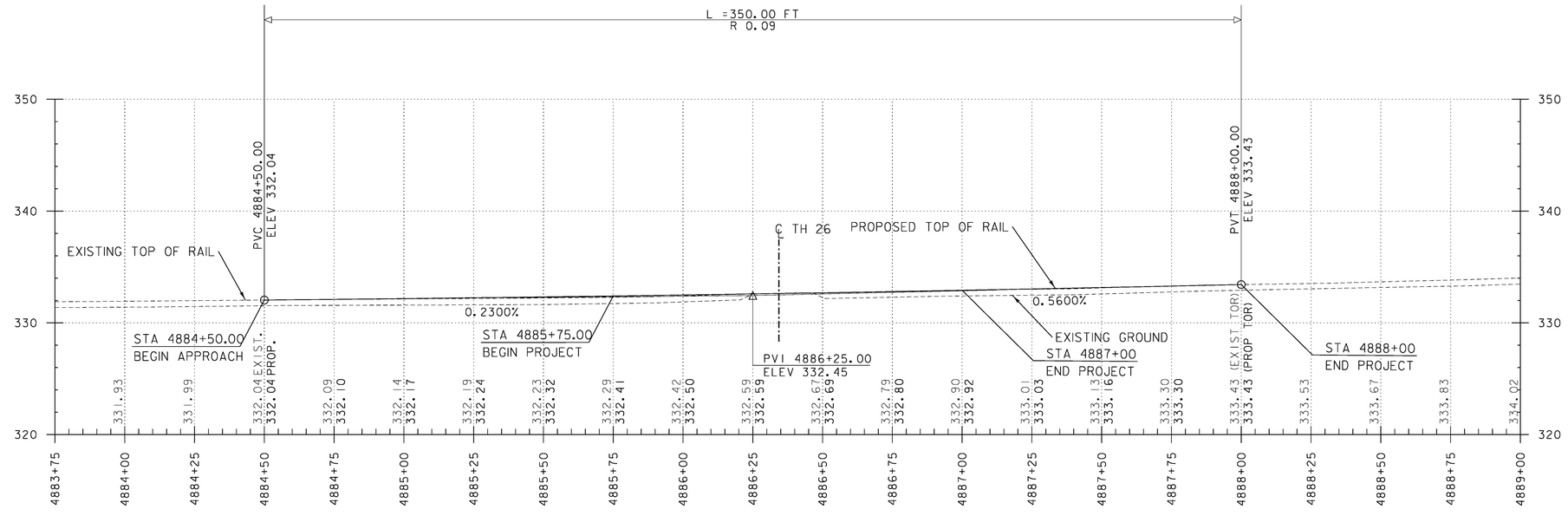

RAILROAD PROFILE

HORIZONTAL SCALE: 1" = 20' VERTICAL SCALE: 1" = 5' (22X34 SHEET)

PROJECT NAME:	NEW HAVEN
PROJECT NUMBER:	STP 2035 (19)
FILE NAME: zl3g606bdr_pro.dgn	PLOT DATE: 2/15/2017
PROJECT LEADER: R. O'BLENIS	DRAWN BY: W. TSE
DESIGNED BY: W. TSE	CHECKED BY: C. GREGORY
PROFILE SHEET	SHEET 15 OF 42

EPSC PLAN NARRATIVE

1.1 PROJECT DESCRIPTION

PROJECT IS A GRADE CROSSING THAT INTERSECTS TH-26 (CAMPGROUND RD) IN NEW HAVEN. PROPOSED WORK INVOLVES THE UPGRADE OF THE GRADE CROSSING FROM A PASSIVE WARNING DEVICE TO AN ACTIVE WARNING DEVICE WITH FLASHERS AND GATES ALONG WITH THE REGRADING OF THE ROAD TO PROVIDE A SMOOTH RIDING SURFACE THROUGH THE CROSSING. TOWN HIGHWAY 26 CAMPGROUND ROAD TO CLOSE IN AREA OF WORK FOR 7 CONTINUOUS DAYS. ALL CONSTRUCTION SHALL BE COMPLETED WITHIN THE 7 DAY WORK WINDOW. NIGHT WORK WILL BE ALLOWED. TOTAL LENGTH OF PROJECT IS APPROXIMATELY 275 FEET OF ROADWAY AND 125 FEET OF RAILROAD.

NOTE: AREA OF DISTURBANCE INCLUDES LIMITS OF EARTH DISTURBANCE WITHIN THE PROJECT AREA, AS WELL AS WASTE, BORROW AND STAGING AREAS, AND OTHER EARTH DISTURBING ACTIVITIES WITHIN OR DIRECTLY ADJACENT TO THE PROJECT LIMITS AS SHOWN ON THE ATTACHED EPSC PLAN.

TOTAL AREA OF DISTURBANCE AS SHOWN ON THE ATTACHED EPSC PLAN IS APPROXIMATELY 0.45 ACRES.

IT IS ANTICIPATED THAT THIS PROJECT WILL LAST 7 DAYS.

1.2 SITE INVENTORY

1.2.1 TOPOGRAPHY
THE TOPOGRAPHY OF THE PROJECT SITE IS HILLY WITH BROAD FLOODPLAINS. THE PROJECT AREA CONSISTS OF WELL ESTABLISHED VEGETATION WITH A MIXTURE OF TREES, SHRUBS AND GRASS. TH-26 (CAMPGROUND RD) IS WITHIN THE PROJECT LIMITS.

1.2.2 DRAINAGE, WATERWAYS, BODIES OF WATER, AND PROXIMITY TO NATURAL OR MAN-MADE WATER FEATURES
A SMALL STREAM IS LOCATED SOUTHEAST OF THE GRADE CROSSING RUNNING SOUTHWEST UNDER THE RAILROAD TRACKS NEAR THE PROJECT SITE. THERE IS ONE CULVERT RUNNING UNDER THE TRACKS SOUTH OF THE GRADE CROSSING. DUE TO THE NATURE OF THE SURROUNDING TERRAIN THE PROJECT SITE WILL RUNOFF WATER TO A FEW NEARBY SLOPES.

1.2.3 VEGETATION
THE VEGETATION IN THE PROJECT AREA CONSISTS OF TREES, UNDERGROWTH AND GRASS. THE IMPACT TO VEGETATION WILL BE LIMITED TO THAT WHICH IS DIRECTLY AFFECTED BY RECONSTRUCTION OF THE ROADWAY ON THE CROSSING APPROACH. DISTURBED VEGETATION WILL BE REESTABLISHED WITH STANDARD SEED AND MULCH PRACTICES.

1.2.4 SOILS
ALL SOIL DATA CAME FROM THE U.S. DEPARTMENT OF AGRICULTURE SOIL CONSERVATION SERVICE FOR THE COUNTY OF ADDISON, VERMONT. SOILS ON THE PROJECT SITE ARE:

EXISTING RAILROAD AND ROADWAY IN THE AREA OF CAMPGROUND ROAD ARE ON AN EMBANKMENT. MATERIAL WAS LIKELY IMPORTED TO SITE TO BUILD THE EMBANKMENT.

SOIL BORINGS WERE COMPLETED AUGUST 1", 2016.

NOTE: K-VALUES GENERALLY INDICATE THE FOLLOWING:
0.0-0.23 = LOW EROSION POTENTIAL
0.24-0.36 = MODERATE EROSION POTENTIAL
0.37 AND HIGHER = HIGH EROSION POTENTIAL

1.2.5 SENSITIVE RESOURCE AREAS
CRITICAL HABITATS: NO
HISTORICAL OR ARCHEOLOGICAL AREAS: NO
PRIME AGRICULTURAL LAND: NO
THREATENED AND ENDANGERED SPECIES: NO
WATER RESOURCE: NO
WETLANDS: YES, IN ALL FOUR QUADRANTS OF THE GRADE CROSSING BUT NONE WILL BE AFFECTED BY THE PROJECT.

1.3 RISK EVALUATION

THIS PROJECT DOES NOT FALL UNDER THE JURISDICTION OF GENERAL PERMIT 3-9020 FOR STORMWATER RUNOFF FROM CONSTRUCTION SITES. SHOULD CHANGES PRIOR TO OR DURING CONSTRUCTION RESULT IN ONE OR MORE ACRES OF EARTH DISTURBANCE OR SHOULD THE PROJECT BECOME PART OF A LARGER PLAN OF DEVELOPMENT, THE CONTRACTOR WILL BE RESPONSIBLE FOR ANY ADDITIONAL PERMITTING.

1.4 EROSION PREVENTION AND SEDIMENT CONTROL

THE EROSION CONTROL PLANS ARE MEANT AS A GUIDELINE FOR PREVENTING EROSION AND CONTROLLING SEDIMENT TRANSPORT. THE PRINCIPLES OUTLINED IN THIS NARRATIVE CONSIST OF APPLYING MEASURES THROUGHOUT CONSTRUCTION OF THE PROJECT IN ORDER TO MINIMIZE SEDIMENT TRANSPORT TO THE RECEIVING WATERS. THE MEASURES INCLUDE STABILIZATION AND STRUCTURAL PRACTICES, STORM WATER CONTROLS AND OTHER POLLLUTION PREVENTION PRACTICES. THEY HAVE BEEN PROPOSED BY THE DESIGNER AS A BASIS FOR PROTECTING RESOURCES AND WILL NEED TO BE BUILT UPON BASED ON THE SPECIFC MEANS AND METHODS OF THE CONTRACTOR.

ALL MEASURES SHALL BE REGULARLY MAINTAINED AND SHALL BE CHECKED FOR SEDIMENT BUILD-UP. SEDIMENT SHALL BE DISPOSED OF AT AN APPPROVED SITE WHERE IT WILL NOT BE SUBJECT TO EROSION.

1.4.1 MARK SITE BOUNDARIES
SITE BOUNDARIES AND AREAS CONSTRUCTION EQUIPMENT CAN ACCESS SHALL BE DELINEATED.

SILT FENCE, WOVEN WIRE REINFORCED SHALL BE USED AS DEMARCATION OF WORK LIMITS.

1.4.2 LIMIT DISTURBANCE AREA
PREVENTING INITIAL SOIL EROSION BY MINIMIZING THE EXPOSED AREA IS MUCH MORE EFFECTIVE THAN TREATING ERODED SEDIMENT. EARTH DISTURBANCE CAN BE MINIMIZED THROUGH CONSTRUCTION PHASING BY ONLY OPENING UP EARTH AS NECESSARY. THIS CAN LIMIT THE AREA THAT WILL BE DISTURBED AND EXPOSED TO EROSION. EMPLOY TEMPORARY CONSTRUCTION STABILIZATION PRACTICES IN INCREMENTAL STAGES AS PHASES CHANGE. FOR PROJECTS WHICH FALL UNDER THE CONSTRUCTION GENERAL PERMIT, ONLY THE ACREAGE LISTED ON THE PERMIT AUTHORIZATION MAY BE EXPOSED AT ANY GIVEN TIME.

MAINTAINING VEGETATED BUFFERS ALONG STREAM BANKS, WETLANDS OR OTHER SENSITIVE AREAS IS A CRUCIAL EROSION AND SEDIMENT CONTROL MEASURE THAT SHOULD BE ESTABLISHED WHEREVER POSSIBLE.

1.4.3 SITE ENTRANCE/EXIT STABILIZATION
TRACKING OF SEDIMENT ONTO PUBLIC HIGHWAYS SHALL BE MINIMIZED TO REDUCE THE POTENTIAL FOR RUNOFF ENTERING RECEIVING WATERS. INSTALLATION SHALL COINCIDE WITH THE CONTRACTORS PROGRESS SCHEDULE.

STABILIZED CONSTRUCTION ENTRANCES SHALL BE INSTALLED AS PROPOSED ON THE EPSC PLAN AND ANYWHERE EQUIPMENT WILL BE GOING FROM AREAS OF EXPOSED SOILS TO PAVED SURFACES.

1.4.4 INSTALL SEDIMENT BARRIERS
SEDIMENT BARRIERS SHALL BE UTILIZED TO INTERCEPT RUNOFF AND ALLOW SUSPENDED SEDIMENT TO SETTLE OUT. THEY SHALL BE INSTALLED PRIOR TO ANY UP SLOPE WORK.

SILT FENCE, WOVEN WIRE REINFORCED WILL BE INSTALLED AS PROPOSED ON THE EPSC PLAN.

1.4.5 DIVERT UPLAND RUNOFF
DIVERSIONARY MEASURES SHALL BE USED TO INTERCEPT RUNOFF FROM ABOVE THE CONSTRUCTION AND DIRECT IT AROUND THE DISTURBED AREA SO THAT CLEAN WATER DOES NOT BECOME MUDDIED WHILE TRAVELING OVER EXPOSED SOILS ON THE CONSTRUCTION SITE.

1.4.6 SLOW DOWN CHANNELIZED RUNOFF
CHECK STRUCTURES CAN BE UTILIZED TO REDUCE THE VELOCITY, AND THUS THE EROSIVE POTENTIAL, OF CONCENTRATED FLOW IN CHANNELS.

1.4.7 CONSTRUCT PERMANENT CONTROLS
PERMANENT STORMWATER TREATMENT DEVICES SHALL BE INSTALLED AS SHOWN ON THE PLANS.

1.4.8 STABILIZE EXPOSED SOILS DURING CONSTRUCTION
ALL AREAS OF DISTURBANCE MUST HAVE TEMPORARY STABILIZATION IN PLACE WITHIN 48 HOURS OF DISTURBANCE.

SURFACE ROUGHENING OF ALL EXPOSED SLOPES, COMBINED WITH TEMPORARY MULCHING, SHALL BE UTILIZED ON A REGULAR BASIS. BIODEGRADABLE EROSION CONTROL MATTING OR AN EQUIVALENT SHALL BE USED TO STABILIZE ALL SLOPES STEEPER THAN 1:3.

THE FORECAST OF RAINFALL EVENTS SHALL TRIGGER IMMEDIATE PROTECTION OF EXPOSED SOILS.

1.4.9 WINTER STABILIZATION
VARIOUS MEASURES SPECIFIC TO WINTER MAY BE NECESSARY SHOULD THE PROJECT EXTEND INTO WINTER (OCTOBER 15 THROUGH APRIL 15).

1.4.10 STABILIZE SOIL AT FINAL GRADE
EXPOSED SOIL MUST BE STABILIZED WITHIN 48 HOURS OF REACHING FINAL GRADE.

SEED, MULCH, FERTILIZER AND LIME SHALL BE USED TO ESTABLISH PERMANENT VEGETATION. FOR SLOPES STEEPER THAN 1:3, BIODEGRADABLE EROSION CONTROL MATTING OR AN EQUIVALENT SHALL BE USED INSTEAD OF MULCH.

1.4.11 INSPECT YOUR SITE
INSPECT THE PROJECT SITE BASED ON SPECIAL PROVISION REQUIREMENTS OR CONSTRUCTION GENERAL PERMIT AUTHORIZATION STIPULATIONS.

1.5 SEQUENCE AND STAGING

THIS SECTION WILL BE DEVELOPED BY THE CONTRACTOR USING THE GUIDANCE OUTLINED IN THE VTRANS EPSC PLAN CONTRACTOR CHECKLIST.

1.5.1 CONSTRUCTION SEQUENCE

1.5.2 OFF-SITE ACTIVITIES
IN ADDITION TO THE CONTRACTOR CHECKLIST ANY ACTIVITIES OUTSIDE THE CONSTRUCTION LIMITS SHALL FOLLOW SUBSECTIONS 105.25- 105.29 OF THE STANDARD SPECIFICATIONS FOR CONSTRUCTION.

PROJECT NAME: NEW HAVEN
PROJECT NUMBER: STP 2035 (19)

FILE NAME: z13g606forms.dgn
PROJECT LEADER: R. O'BLENIS
DESIGNED BY: W. TSE
EPSC NARRATIVE

PLOT DATE: 2/15/2017
DRAWN BY: W. TSE
CHECKED BY: R. O'BLENIS

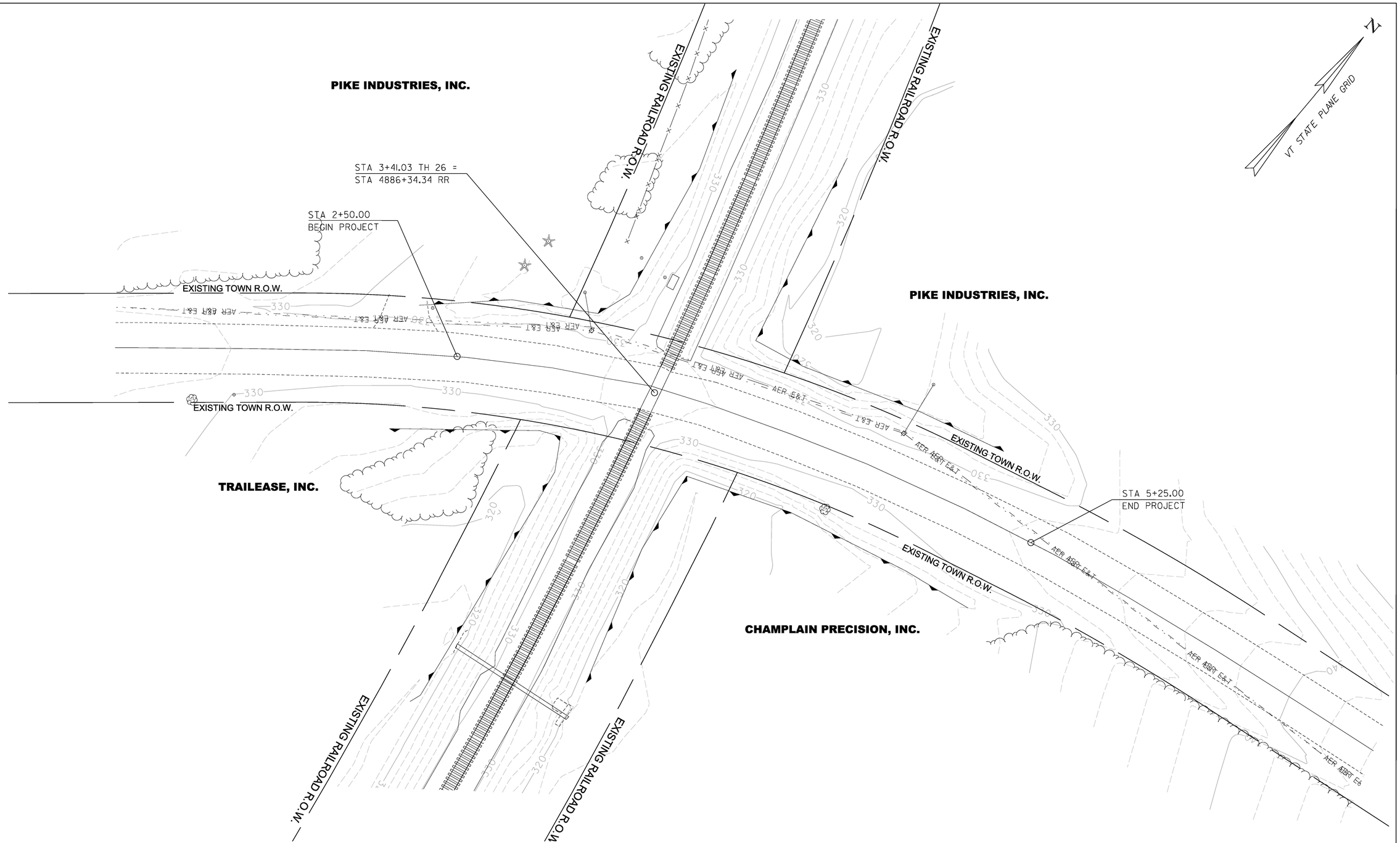

SCALE 1" = 20'-0"
20 0 20

PROJECT NAME: NEW HAVEN	
PROJECT NUMBER: STP 2035 (19)	
FILE NAME: z13g606bdr_ero.dgn	PLOT DATE: 2/15/2017
PROJECT LEADER: R. O'BLENIS	DRAWN BY: W. TSE
DESIGNED BY: W. TSE	CHECKED BY: R. O'BLENIS
EPSC EXISTING LAYOUT SHEET 1	SHEET 17 OF 42

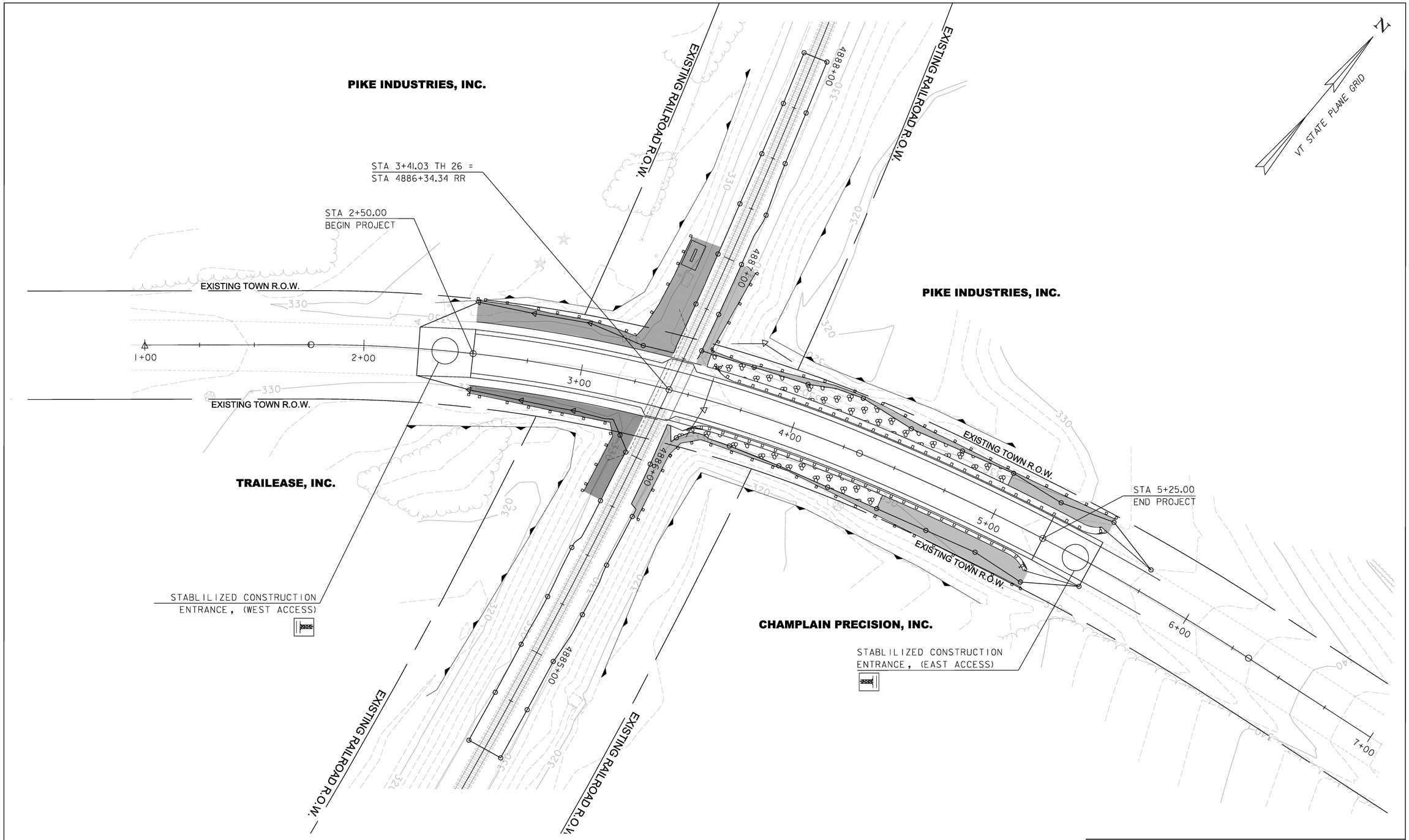

PROJECT NAME: NEW HAVEN	
PROJECT NUMBER: STP 2035 (19)	
FILE NAME: zl3g606bdr_ero.dgn	PLOT DATE: 2/15/2017
PROJECT LEADER: R. O'BLENIS	DRAWN BY: W. TSE
DESIGNED BY: W. TSE	CHECKED BY: R. O'BLENIS
EPSC PROPOSED LAYOUT	SHEET 18 OF 42

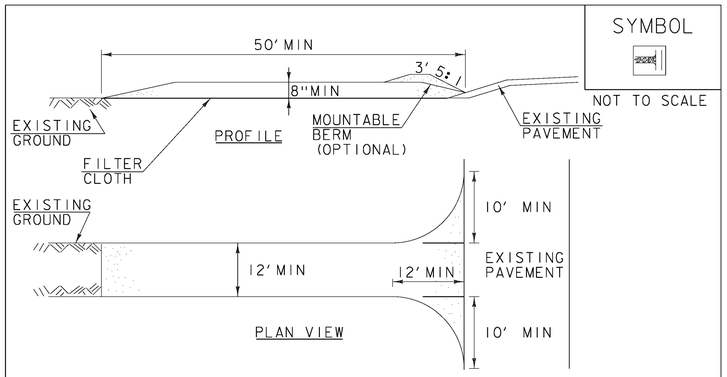

SYMBOL

NOT TO SCALE

CONSTRUCTION SPECIFICATIONS

1. STONE SIZE- USE 1-4" STONE, RECLAIMED OR RECYCLED CONCRETE EQUIVALENT.
2. LENGTH- NOT LESS THAN 50' (EXCEPT ON A SINGLE RESIDENCE LOT WHERE A 30' MINIMUM LENGTH APPLIES).
3. THICKNESS- NOT LESS THAN 8".
4. WIDTH- 12' MINIMUM, BUT NOT LESS THAN THE FULL WIDTH AT POINTS WHERE INGRESS OR EGRESS OCCURS. 24' IF SINGLE ENTRANCE TO SITE.
5. GEOTEXTILE MUST BE PLACED OVER THE ENTIRE AREA PRIOR TO PLACING STONE.
6. SURFACE WATER- ALL SURFACE WATER FLOWING OR DIVERTED TOWARD CONSTRUCTION ENTRANCES SHALL BE PIPED BENEATH THE ENTRANCE. IF PIPING IS IMPRACTICAL, A MOUNTABLE BERM WITH 5:1 SLOPES WILL BE PERMITTED.
7. MAINTENANCE- THE ENTRANCE SHALL BE MAINTAINED IN A CONDITION WHICH WILL PREVENT TRACKING OR FLOWING OF SEDIMENT ONTO PUBLIC RIGHTS-OF-WAY, ALL SEDIMENT SPILLED, DROPPED, WASHED OR TRACKED ONTO PUBLIC RIGHTS-OF-WAY MUST BE REMOVED IMMEDIATELY.
8. WHEN WASHING IS REQUIRED, IT SHALL BE DONE ON AN AREA STABILIZED WITH STONE AND WHICH DRAINS INTO AN APPROVED SEDIMENT TRAPPING DEVICE.
9. PERIODIC INSPECTION AND NEEDED MAINTENANCE SHALL BE PROVIDED ACCORDING TO PERMIT REQUIREMENTS.

ADAPTED FROM DETAILS PROVIDED BY: NEW YORK STATE DEC
ORIGINALLY DEVELOPED BY USDA-NRCS
VERMONT DEPARTMENT OF ENVIRONMENTAL CONSERVATION

STABILIZED CONSTRUCTION ENTRANCE

NOTES:
REFER TO "THE VERMONT STANDARDS & SPECIFICATIONS FOR EROSION PREVENTION & SEDIMENT CONTROL -2006- "FROM THE VT AGENCY OF NATURAL RESOURCES FOR ADDITIONAL GUIDANCE.

THIS WORK SHALL BE PERFORMED IN ACCORDANCE WITH SECTION 653 FOR VEHICLE TRACKING PAD (PAY ITEM 653.35) OR AS SPECIFIED IN THE CONTRACT.

REVISIONS	
MARCH 24, 2008	WHF
JANUARY 13, 2009	WHF

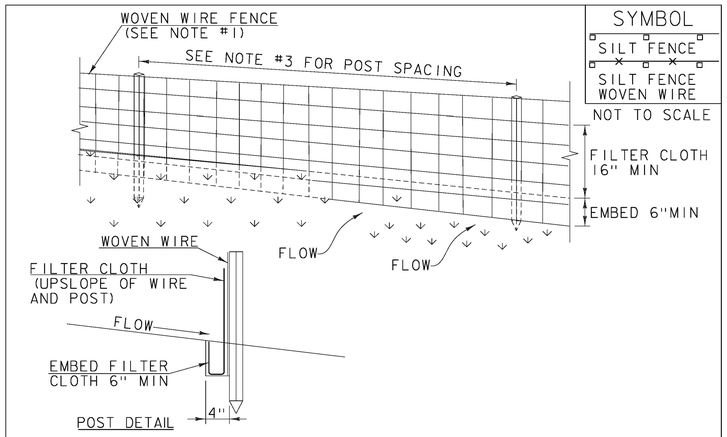

SYMBOL

SILT FENCE

SILT FENCE WOVEN WIRE

NOT TO SCALE

CONSTRUCTION SPECIFICATIONS

1. WOVEN WIRE REINFORCED FENCE IS REQUIRED WITHIN 100' UPSLOPE OF RECEIVING WATERS WHEN THE PROJECT FALLS UNDER A CONSTRUCTION STORMWATER PERMIT. WOVEN WIRE SHALL BE A MIN. 14 GAUGE WITH A 6" MAX. MESH OPENING.
2. FILTER CLOTH SHALL BE EITHER FILTER X, MIRAFI100X, STABILINKA T140N OR APPROVED EQUIVALENT.
3. POST SPACING FOR WIRE-BACKED FENCE SHALL BE 10' MAXIMUM. FOR FILTER-CLOTH FENCE, WHEN ELONGATION IS >50%, POST SPACING SHALL NOT EXCEED 4' AND WHEN ELONGATION IS <50%, POST SPACING SHALL NOT EXCEED 6'.
4. WOVEN WIRE FENCE IS TO BE FASTENED SECURELY TO FENCE POSTS WITH WIRE TIES. FILTER CLOTH IS TO BE FASTENED SECURELY TO WOVEN WIRE FENCE WITH TIES SPACED EVERY 24" AT TOP AND MID SECTION.
5. WHEN TWO SECTIONS OF FILTER CLOTH ADJOIN EACH OTHER THEY SHALL BE OVER-LAPPED BY 6" AND FOLDED.
6. MAINTENANCE SHALL BE PERFORMED AS NEEDED AND MATERIAL REMOVED WHEN SEDIMENT REACHES HALF OF FABRIC HEIGHT.

ADAPTED FROM DETAILS PROVIDED BY: NEW YORK STATE DEC
ORIGINALLY DEVELOPED BY USDA-NRCS
VERMONT DEPARTMENT OF ENVIRONMENTAL CONSERVATION

SILT FENCE

NOTES:
REFER TO "THE VERMONT STANDARDS & SPECIFICATIONS FOR EROSION PREVENTION & SEDIMENT CONTROL -2006- "FROM THE VT AGENCY OF NATURAL RESOURCES FOR ADDITIONAL GUIDANCE.

THIS WORK SHALL BE PERFORMED IN ACCORDANCE WITH SECTION 649 AND AS SHOWN IN THE PLANS FOR GEOTEXTILE FOR SILT FENCE, WOVEN WIRE REINFORCED (PAY ITEM 649.515).

REVISIONS	
MARCH 21, 2008	WHF
DECEMBER 11, 2008	WHF
JANUARY 13, 2009	WHF

VAOT LOW GROW/FINE FESCUE MIX						
	LBS/AC					
WEIGHT	BROADCAST	HYDROSEED	NAME	LATIN NAME	GERM	PURITY
38%	57	95	CREEPING RED FESCUE	FESTUCA RUBRA VAR. RUBRA	90%	98%
29%	43.5	72.5	HARD FESCUE	FESTUCA LONGIFOLIA	85%	95%
15%	22.5	37.5	CHEWINGS FESCUE	FESTUCA RUBRA VAR. COMMUTATA	87%	95%
15%	22.5	37.5	ANNUAL RYEGRASS	LOLIUM MULTIFLORUM	90%	95%
3%	4.5	7.5	INERTS			
100%	150	250				

VAOT RURAL AREA MIX						
	LBS/AC					
WEIGHT	BROADCAST	HYDROSEED	NAME	LATIN NAME	GERM	PURITY
37.5%	22.5	45	CREEPING RED FESCUE	FESTUCA RUBRA VAR. RUBRA	85%	98%
37.5%	22.5	45	TALL FESCUE	FESTUCA ARUNDINACEA	90%	95%
5.0%	3	6	RED TOP	AGROSTIS GIGANTEA	90%	95%
15.0%	9	18	WHITE FIELD CLOVER	TRIFOLIUM REPENS	85%	98%
5.0%	3	6	ANNUAL RYE GRASS	LOLIUM MULTIFLORUM	85%	95%
100%	60	120				

GENERAL AMENDMENT GUIDANCE		
FERTILIZER	LIME	
10/20/10	AG LIME	PELLITIZED
500 LBS/AC	2 TONS/AC	1 TONS/AC

CONSTRUCTION GUIDANCE

1. SEED MIX: THE CONTRACTOR SHALL COORDINATE WITH THE RESIDENT ENGINEER ON WHICH SEED MIX TO USE.
2. SEED MIX: USE AS INDICATED IN THE PLANS AND/OR FOR ALL ESTABLISHED UPLAND (NON WETLAND) AREAS DISTURBED BY THE CONTRACTOR.
3. ALL SEED MIXTURES: SHALL NOT HAVE A WEED CONTENT EXCEEDING 0.40% BY WEIGHT AND SHALL BE FREE OF ALL NOXIOUS SEED.
4. FERTILIZER AND LIMESTONE: SHALL FOLLOW RATES SHOWN ON PLAN OR AS DIRECTED BY THE ENGINEER.
5. HAY MULCH: TO BE PLACED ON EARTH SLOPES AT THE RATE OF 2 TONS/ACRE, ACHIEVE 90% GROUND COVER OR AS DIRECTED BY THE ENGINEER.
6. HYDROSEEDING: ALTHOUGH GUIDANCE IS GIVEN ABOVE THE SITE CONDITIONS AND THE TYPE OF HYDROSEED PROPOSED FOR USE WILL ULTIMATELY DICTATE THE AMOUNTS AND TYPES OF SOIL AMENDMENTS TO BE APPLIED.
7. TURF ESTABLISHMENT: PLACING SEED, FERTILIZER, LIME AND MULCH PRIOR TO SEPTEMBER 15 AND AFTER APRIL 15 CAN BETTER ENSURE A VIGOROUS GROWTH OF GRASS.

ADAPTED FROM VTRANS TECHNICAL LANDSCAPE MANUAL FOR ROADWAYS AND TRANSPORTATION FACILITIES

TURF ESTABLISHMENT

THIS WORK SHALL BE PERFORMED IN ACCORDANCE WITH SECTION 651 FOR SEED (PAY ITEM 651.15)

REVISIONS	
JANUARY 12, 2015	WHF

PROJECT NAME: NEW HAVEN
PROJECT NUMBER: STP 2035 (19)

FILE NAME: zl3g606bdr_erodet.dgn
PROJECT LEADER: R. O'BLENIS
DESIGNED BY: W. TSE
EPSC DETAIL SHEET 1

PLOT DATE: 2/15/2017
DRAWN BY: W. TSE
CHECKED BY: R. O'BLENIS
SHEET 19 OF 42

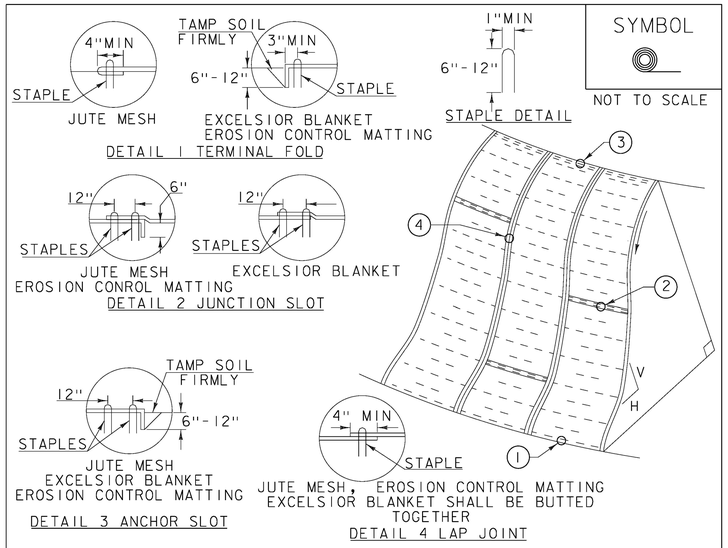

SYMBOL

NOT TO SCALE

CONSTRUCTION SPECIFICATIONS

1. APPLY TO SLOPES GREATER THAN 3H:1V OR WHERE NECESSARY TO AID IN ESTABLISHING VEGETATION.

2. APPLY FERTILIZER, LIME SEED PRIOR TO PLACING MATTING.

3. STAPLES ARE TO BE PLACED ALTERNATELY, IN COLUMNS APPROXIMATELY 2' APART AND IN ROWS APPROXIMATELY 3' APART. APPROXIMATELY 175 STAPLES ARE REQUIRED PER 4'X225' ROLL OF MATERIAL AND 125 STAPLES ARE REQUIRED PER 4'X150' ROLL OF MATERIAL.

4. DISTURBED AREAS SHALL BE SMOOTHLY GRADED. EROSION CONTROL MATERIAL SHALL BE PLACED LOOSELY OVER GROUND SURFACE. DO NOT STRETCH.

5. ALL TERMINAL ENDS AND TRANSVERSE LAPS SHALL BE STAPLED AT APPROXIMATELY 12" INTERVALS.

ADAPTED FROM DETAILS PROVIDED BY: NEW YORK STATE DEC
ORIGINALLY DEVELOPED BY USDA-NRCS
VERMONT DEPARTMENT OF ENVIRONMENTAL CONSERVATION

ROLLED EROSION CONTROL PRODUCT (RECP) SIDE SLOPE

NOTES:
REFER TO "THE VERMONT STANDARDS & SPECIFICATIONS FOR EROSION PREVENTION & SEDIMENT CONTROL -2006- " FROM THE VT AGENCY OF NATURAL RESOURCES FOR ADDITIONAL GUIDANCE.
THIS WORK SHALL BE PERFORMED IN ACCORDANCE WITH SECTION 653 AND AS SHOWN IN THE PLANS FOR EPSC PLAN (PAY ITEM 652.10)

REVISIONS	
APRIL 16, 2007	JMF
JANUARY 13, 2009	WHF

PROJECT NAME: NEW HAVEN
PROJECT NUMBER: STP 2035 (19)

FILE NAME: zl3g606bdr_erodet.dgn
PROJECT LEADER: R. O'BLENIS
DESIGNED BY: W. TSE
EPSC DETAIL SHEET 2

PLOT DATE: 2/15/2017
DRAWN BY: W. TSE
CHECKED BY: R. O'BLENIS
SHEET 20 OF 42

NOTE:

1. ALL SIGNS TO BE REMOVED ARE TO BE RETAINED UNTIL THE COMPLETION OF THE INSTALLATION OF THE RAIL-HIGHWAY ACTIVE WARNING SYSTEM.

STA 3+21 RT
RAIL CROSSING ROAD
R

STA 3+37 RT
RET

STA 3+36 LT
REPORT EMERGENCY OR PROBLEM TO 1-888-265-2735 CROSSING #851-364Y
NEW

STA 3+57 LT
RAIL CROSSING ROAD
R

STA 2+93 RT
STOP
R

STA 3+56 LT
RAIL CROSSING ROAD
NEW ON GATE MAST
REPORT EMERGENCY OR PROBLEM TO 1-888-265-2735 CROSSING #851-364Y
NEW ON GATE MAST

STA 2+50
BEGIN PROJECT

EXISTING TOWN R.O.W.

STA 2+25
BEGIN APPROACH
LIMITS OF PAVEMENT

EXISTING RAILROAD R.O.W.

EXISTING RAILROAD R.O.W.

STA 4+85 LT
R R
NEW
25 M.P.H.
NEW

EXISTING TOWN R.O.W.

CONSTRUCTION LIMITS

STA 1+96 RT
R R
NEW
25 M.P.H.
NEW

STA 3+25 RT
RAIL CROSSING ROAD
NEW ON GATE MAST
REPORT EMERGENCY OR PROBLEM TO 1-888-265-2735 CROSSING #851-364Y
NEW ON GATE MAST

STA 5+25
END PROJECT

STA 5+50
END APPROACH
LIMITS OF PAVEMENT

STA 5+99 LT
NO PARKING THIS SIDE OF STREET
RET

EXISTING TOWN R.O.W.

STA 3+86 LT
STOP
R

STA 3+55 RT
RET

EXISTING RAILROAD R.O.W.

EXISTING RAILROAD R.O.W.

VT STATE PLANE GRID

TRAFFIC SIGN, TYPE A, ITEM 675.20

STA 1+96 RT (2)
STA 3+24 RT (2)
STA 3+38 LT
STA 3+58 LT (2)
STA 4+85 LT (2)

REMOVE SIGNS, ITEM 675.50

STA 2+93 RT
STA 3+21 RT
STA 3+57 LT
STA 3+58 LT

DURABLE 4" YELLOW LINE (DOUBLE, CENTERLINE), ITEM 646.410

STA 1+00 - 7+00 (600 LF)

DURABLE RAILROAD SYMBOL, ITEM 646.510

RAILROAD CROSSING SYMBOL

STA 1+96 RT
STA 4+85 LT

RAILROAD CROSSING BAR

STA 1+71 RT
STA 2+20 RT
STA 4+62 LT
STA 5+09 LT

24" STOP BAR

STA 3+21 RT (9 LF)
STA 3+61 LT (9 LF)

NOTE:
1. REMOVE EXISTING W10-1(2) OUTSIDE OF PROJECT LIMIT ON CAMPGROUND RD.
2. FOR TRAFFIC SIGN INFORMATION, SEE TRAFFIC SIGN SUMMARY SHEETS.

LEGEND:
R - REMOVE
NEW - NEW
RET - RETAIN

20 0 20

HDR

PROJECT NAME: NEW HAVEN
PROJECT NUMBER: STP 2035 (19)

FILE NAME: z13g606bdr_ts.dgn
PROJECT LEADER: R. O'BLENIS
DESIGNED BY: W. TSE
TRAFFIC SIGN/PAVEMENT MARKING SHEET 1

PLOT DATE: 2/15/2017
DRAWN BY: W. TSE
CHECKED BY: C. GREGORY
SHEET 21 OF 42

STATE OF VERMONT
AGENCY OF TRANSPORTATION

TRAFFIC SIGN SUMMARY SHEET

MILE MARKER, STATION OR SIGN NUMBER	SIGN LEGEND	SIGN DIMENSIONS			NEW & SALVAGED SIGNS				EXIST POST		NEW SIGN POSTS																					REMARKS	SIGN DETAIL	
											NO. OF	FLANGED CHANNEL			SQUARE STEEL (in)					TUBULAR ALUMINUM Ø (IN)			TUBULAR STEEL Ø (IN)					W-SHAPE STEEL							DETAIL ON SHEET NUMBER	STANDARD SHEET NUMBER
		EACH	WIDTH (in)	HEIGHT (in)	"A"	"B"	SALV SIGN	SALV TIS	RETAIN	SALVAGE	POST	(LB / FT)			1.75 (LB / FT)	2.00 (LB / FT)	2.50 (LB / FT)	ANCHOR	SLEEVE	3.00 (LB / FT)	4.00 (LB / FT)	4.0 MOD (LB / FT)	FOUNDATION	3.00 (LB / FT)	3.50 (LB / FT)	4.00 (LB / FT)	5.00 (LB / FT)	FTG. SIZE 24"	FTG. SIZE 30"	WEIGHT	POST SIZE	SIGN FRAME REQUIRED			
												1.12	2.00	3.00	1.88	2.42	3.35			1.30	1.70	1.70		7.60	9.00	10.80	14.60								
OPTION ITEMS																																			
TH-26 STA 1+96 RT	R R	1	36 DIA.	36 DIA.	7.1						1.0					15.0		1.0															W10-1		
	25 M.P.H.	1	18.0	18.0	2.3						-					-		-														W13-1 MOUNTED WITH W10-1		
TH-26 STA 3+24 RT	RAIL CROSSING ROAD	1	48.0	18.0	6.0						-					-		-														R15-1 MOUNTED ON GATE MAST	41	
	REPORT EMERGENCY OR PROBLEM TO 1-888-265-2735 CROSSING #851-3649	1	12.0	9.0	0.8						-					-		-														I-13 MOUNTED ON GATE MAST	29, 41	
TH-26 STA 3+36 LT	REPORT EMERGENCY OR PROBLEM TO 1-888-265-2735 CROSSING #851-3649	1	12.0	9.0	0.8						-					-		-														I-13 MOUNTED ON SIGNAL CABINET HOUSE	29	
TH-26 STA 3+58 LT	RAIL CROSSING ROAD	1	48.0	18.0	6.0						-					-		-														R15-1 MOUNTED ON GATE MAST	41	
	REPORT EMERGENCY OR PROBLEM TO 1-888-265-2735 CROSSING #851-3649	1	12.0	9.0	0.8						-					-		-														I-13 MOUNTED ON GATE MAST	29, 41	
TH-26 STA 4+85 LT	R R	1	36 DIA.	36 DIA.	7.1						1.0					15.0		1.0														W10-1		
	25 M.P.H.	1	18.0	18.0	2.3						-					-		-														W13-1 MOUNTED WITH W10-1		
TOTALS					SF 32.89	SF .	EA. .	SF .	XXXXXXXXXX XXXXXXXXXX XXXXXXXXXX			FT .	FT .	FT .	FT .	FT 30.	FT .	XXXXX XXXXX XXXXX XXXXX XXXXX	EA .	LB .	LB .	LB .	EA.	LB .	LB .	LB .	LB .	EA. .	EA. .	LB .					

FINAL POST LENGTHS ARE TO BE DETERMINED IN THE FIELD. POST SIZES ARE COMPUTED BASED ON INFORMATION FURNISHED ON THE STANDARD SHEETS AND THE VTRANS "SIGN POST DESIGN GUIDELINE."

HDR

PROJECT NAME: **NEW HAVEN**
PROJECT NUMBER: **STP 2035 (19)**

FILE NAME: **z13g606tss.xls** PLOT DATE: **2/15/2017**
PROJECT MANAGER: **R. O'BLENIS** DRAWN BY: **W. TSE**
DESIGNED BY: **W. TSE** CHECKED **C. GREGORY**
TRAFFIC SIGN SUMMARY SHEET SHEET **22** OF **42**

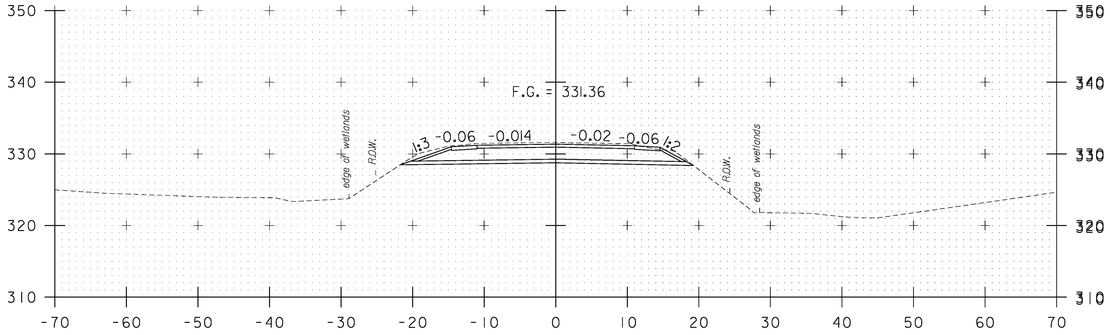

3+00

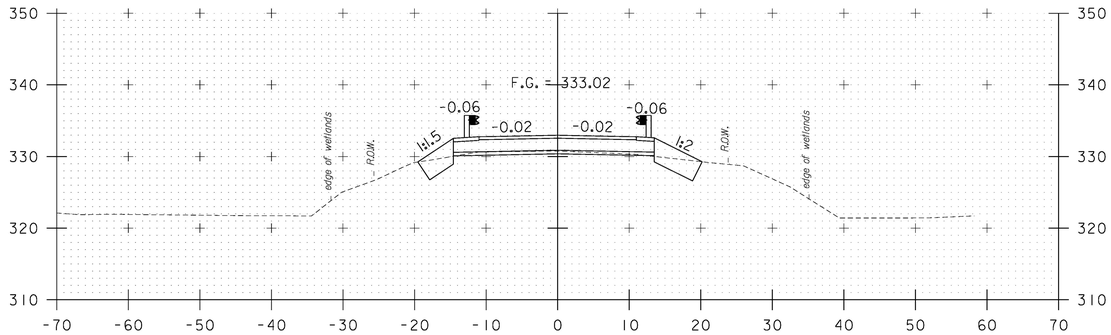

4+50

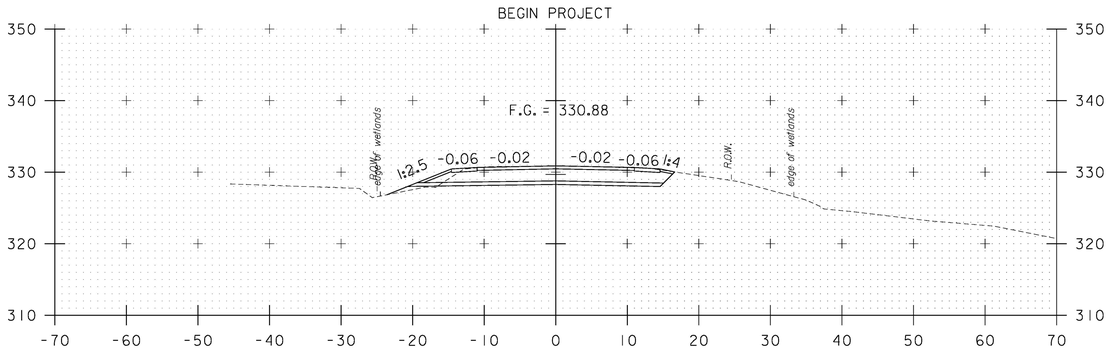

2+50

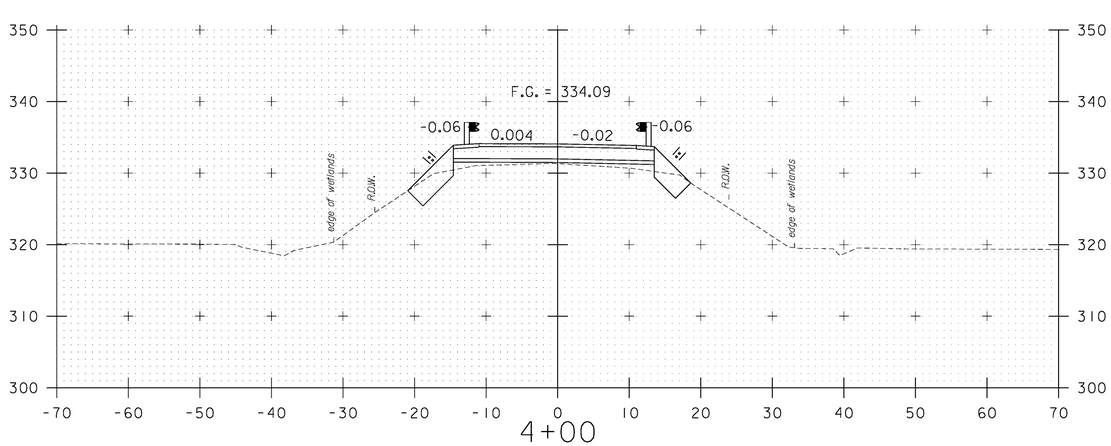

4+00

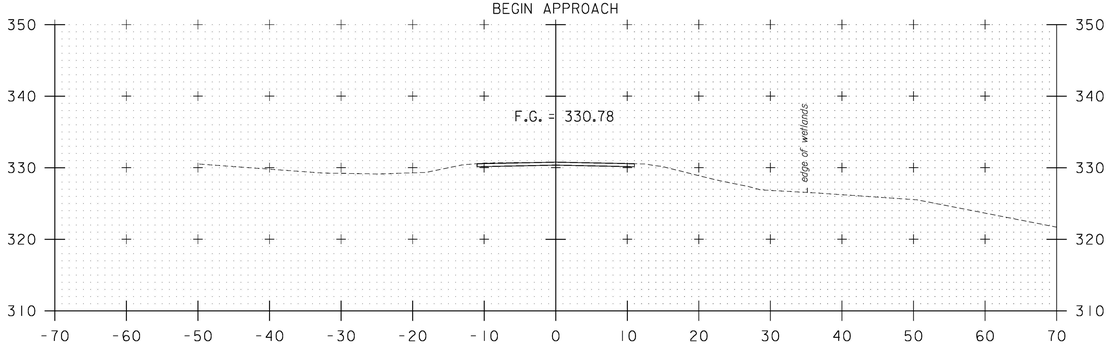

2+25

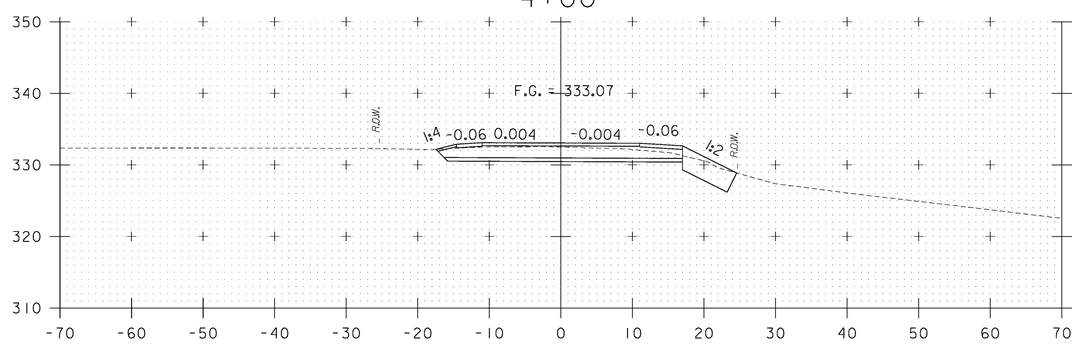

3+50

STA. 2+25 TO STA. 4+50

PROJECT NAME: NEW HAVEN	
PROJECT NUMBER: STP 2035 (19)	
FILE NAME: zl3g606xs.dgn	PLOT DATE: 2/15/2017
PROJECT LEADER: R. O'BLENIS	DRAWN BY: W. TSE
DESIGNED BY: W. TSE	CHECKED BY: C. GREGORY
ROADWAY CROSS SECTION SHEET 1	SHEET 23 OF 42

END APPROACH

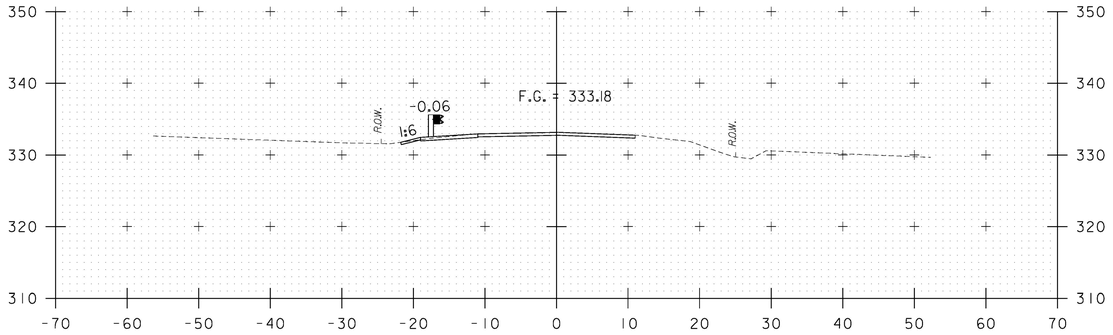

5+50

END PROJECT

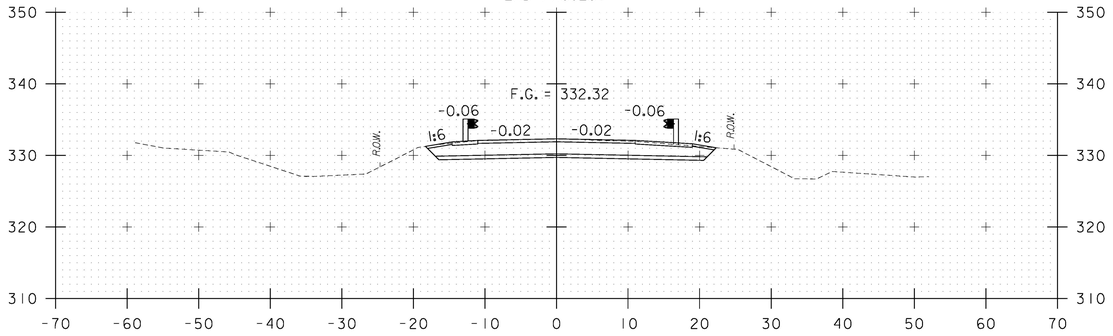

5+25

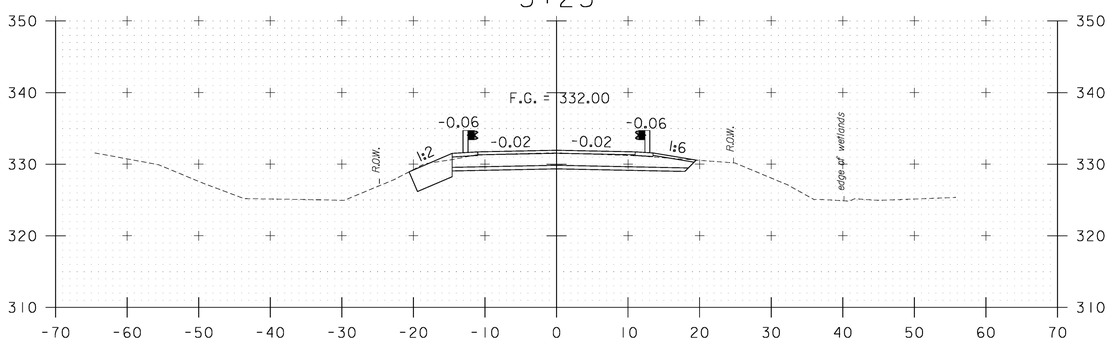

5+00

STA. 5+00 TO STA. 5+50

PROJECT NAME:	NEW HAVEN
PROJECT NUMBER:	STP 2035 (19)
FILE NAME: zl3g606xs.dgn	PLOT DATE: 2/15/2017
PROJECT LEADER: R. O'BLENIS	DRAWN BY: W. TSE
DESIGNED BY: W. TSE	CHECKED BY: C. GREGORY
ROADWAY CROSS SECTION SHEET 2	SHEET 24 OF 42

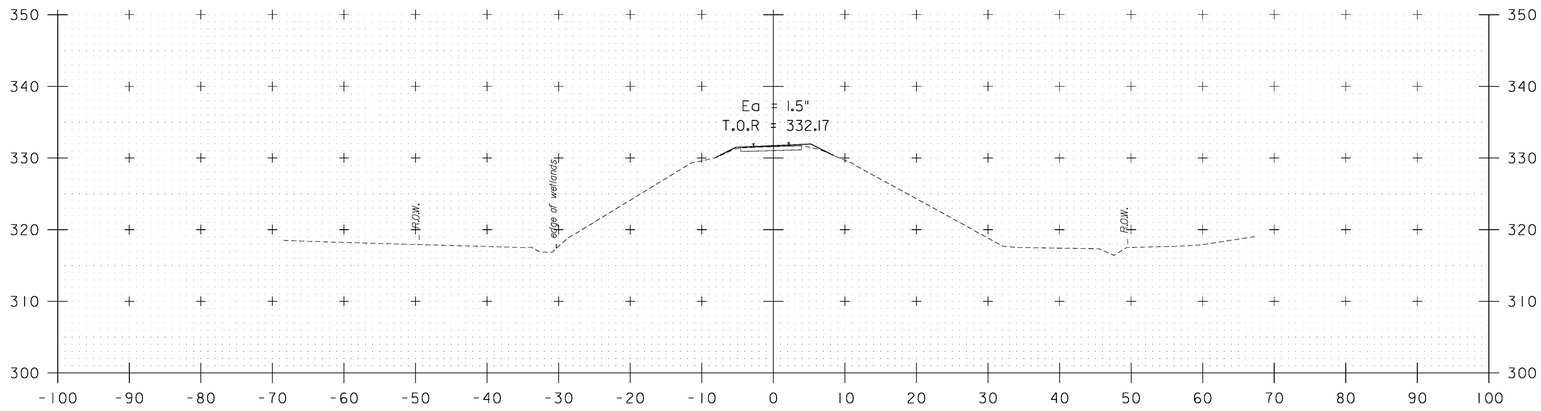

4885+00

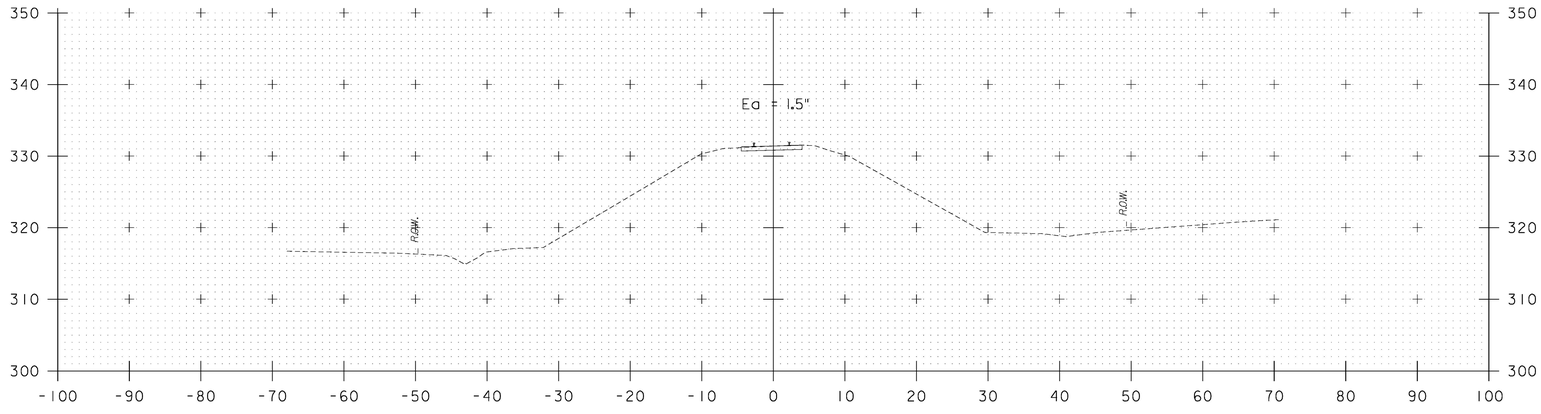

4884+00

STA. 4884+00 TO STA. 4885+00

PROJECT NAME: NEW HAVEN	
PROJECT NUMBER: STP 2035 (19)	
FILE NAME: zl3g606xs.dgn	PLOT DATE: 2/15/2017
PROJECT LEADER: R. O'BLENIS	DRAWN BY: W. TSE
DESIGNED BY: W. TSE	CHECKED BY: R. O'BLENIS
RAILROAD CROSS SECTION SHEET 1	SHEET 25 OF 42

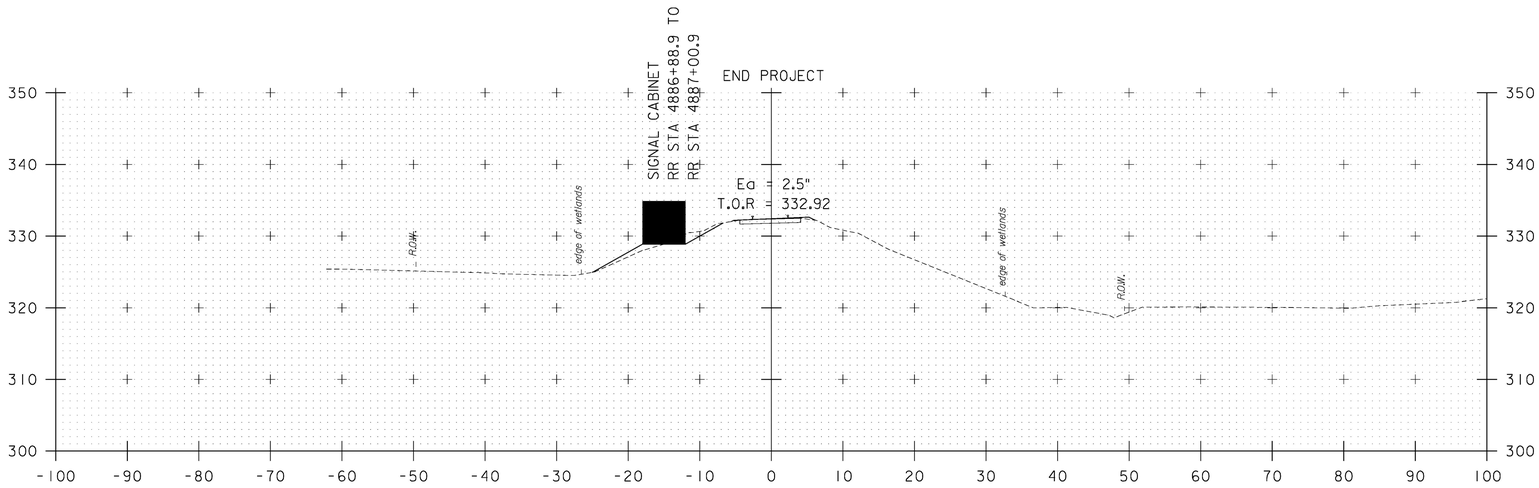

4887+00

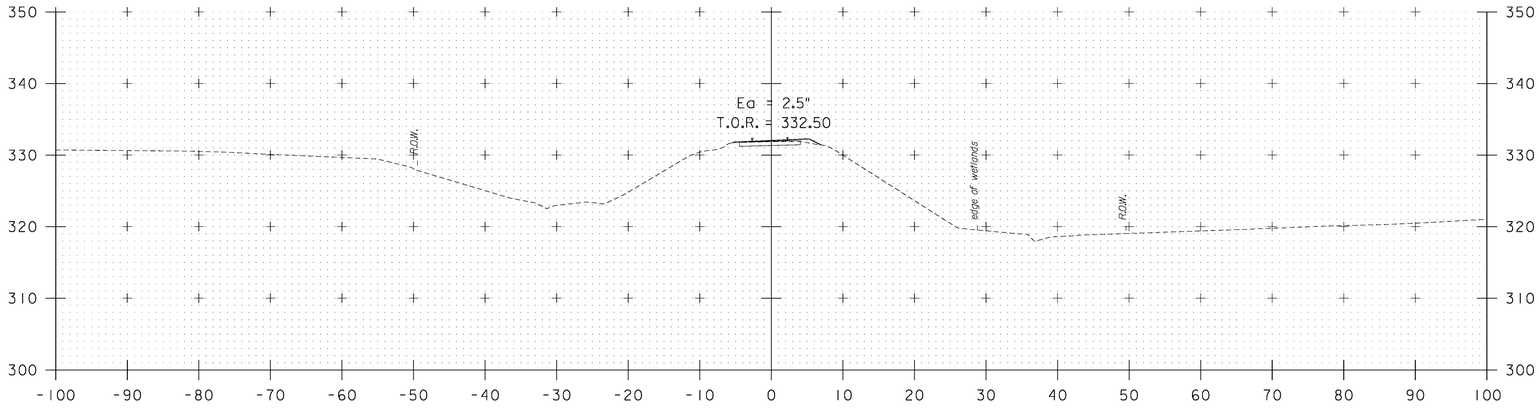

4886+00

STA. 4886+00 TO STA. 4887+00

PROJECT NAME: NEW HAVEN	
PROJECT NUMBER: STP 2035 (19)	
FILE NAME: zl3g606xs.dgn	PLOT DATE: 2/15/2017
PROJECT LEADER: R. O'BLENIS	DRAWN BY: W. TSE
DESIGNED BY: W. TSE	CHECKED BY: R. O'BLENIS
RAILROAD CROSS SECTION SHEET 2	SHEET 26 OF 42

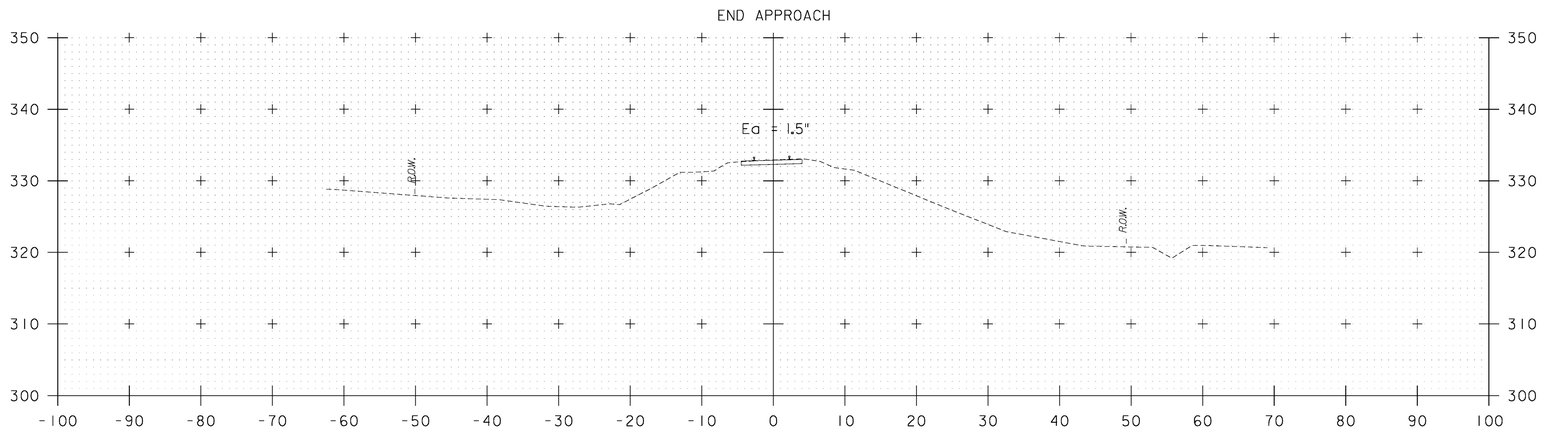

4888+00

STA. 4888+00 TO STA. 4888+00

PROJECT NAME: NEW HAVEN	
PROJECT NUMBER: STP 2035 (19)	
FILE NAME: z13g606xs.dgn	PLOT DATE: 2/15/2017
PROJECT LEADER: R. O'BLENIS	DRAWN BY: W. TSE
DESIGNED BY: W. TSE	CHECKED BY: R. O'BLENIS
RAILROAD CROSS SECTION SHEET 3	SHEET 27 OF 42



1.9" Radius, 0.8" Border, White on Blue;
[REPORT EMERGENCY] B 80% spacing;
[OR PROBLEM] B;
[TO 1-888-265-2735] B 80% spacing;
[CROSSING #851-364Y] B 80% spacing;

I-13
EMERGENCY NOTIFICATION

SIGN NOTES

1. THE SIGN SHALL HAVE ASTM TYPE III RETROREFLECTIVE WHITE TEXT AND BORDER ON AN ASTM TYPE III RETROREFLECTIVE BLUE BACKGROUND. THE COLORS SHALL CONFORM WITH THE COLORS ADOPTED BY AASHTO AND APPROVED BY FHWA.

* SERIES 2000 STANDARD ALPHABETS

NOT TO SCALE

PROJECT NAME: NEW HAVEN
PROJECT NUMBER: STP 2035(19)

FILE NAME: z13G606tssdet.dgn
PROJECT LEADER: R. O'BLENIS
DESIGNED BY: W. TSE
TRAFFIC SIGN DETAILS SHEET

PLOT DATE: 2/15/2017
DRAWN BY: W. TSE
CHECKED BY: R. O'BLENIS
SHEET 28 OF 42

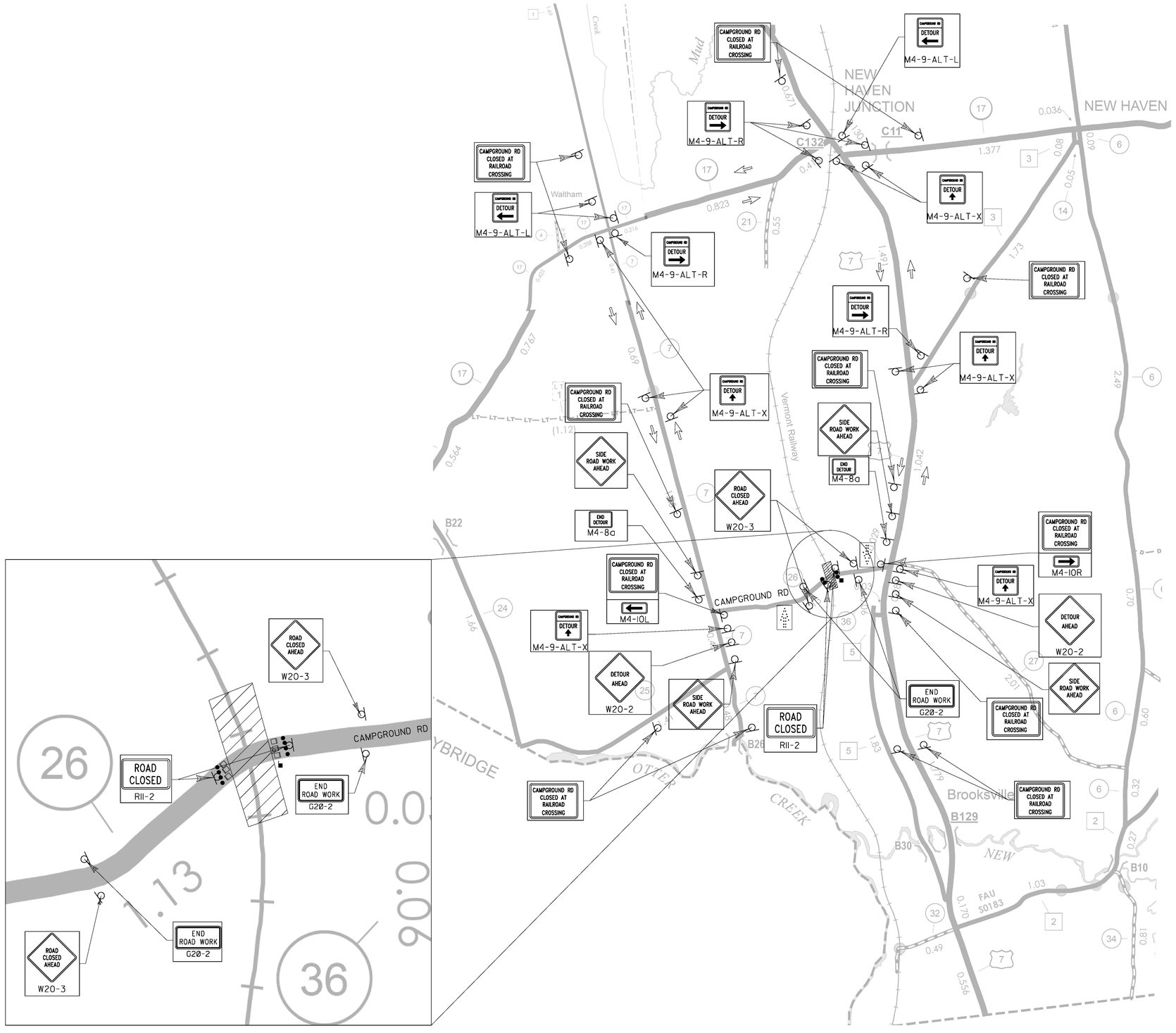

NOTES:

1. A ROAD CLOSURE OF 7 DAYS WILL BE USED FOR TO CONSTRUCT THE GRADE CROSSING, GATE AND FLASHER MAST ARM, SIGNAL CABINET, ROADWAY, AND ALL OTHER COMPONENTS TO THE PROJECT.
2. ROAD CLOSURE AND DETOUR IS APPLIED FOR THE WHOLE 7 DAY DURATION OF THE PROJECT.
3. WHEN EXISTING ROUTE MARKER ASSEMBLIES ARE LOCATED AT INTERSECTIONS OR ALONG THE DETOUR ROUTE, THE DETOUR ROUTE MARKER ASSEMBLY SHALL BE INSTALLED ADJACENT TO EXISTING ROUTE MARKER ASSEMBLIES. EXISTING ROUTE MARKER ASSEMBLIES SHALL BE COVERED WHERE EXISTING ROUTE MARKER ASSEMBLIES CONFLICT WITH DETOUR ROUTE MARKER ASSEMBLY.
4. DETOUR ROUTE MARKER ASSEMBLIES SHALL BE INSTALLED AT EVERY MAJOR INTERSECTION ALONG THE DETOUR ROUTE IN BOTH DIRECTION OF TRAVEL.
5. DETOUR TRAILBLAZERS SHALL BE INSTALLED AT EVERY MILE ALONG THE DETOUR ROUTE IN BOTH DIRECTIONS OF TRAVEL.
6. TWO MESSAGE BOARDS SHALL BE INSTALLED TWO WEEKS IN ADVANCE OF THE START OF CONSTRUCTION AND ANY ROAD CLOSURE IN ADVANCE OF THE GRADE CROSSING AT CAMPGROUND RD. AS SHOWN ON THE PLAN OR AS DIRECTED BY THE ENGINEER.
7. FOR GENERAL NOTES SEE VAOT STANDARD T-1.
8. PAYMENT FOR TRAFFIC CONTROL WORK WILL BE MADE UNDER ITEM 900.645 SPECIAL PROVISION (TRAFFIC CONTROL, ALL INCLUSIVE).
9. THE CONTRACTOR MAY PROPOSE TO USE THEIR OWN SITE SPECIFIC TRAFFIC CONTROL PLAN WHILE MAINTAINING THE PHASES OF CONSTRUCTION, WORK TIMES AS STATED ABOVE AND IN THE SPECIAL PROVISIONS.
10. THE CONTRACTOR MUST COMPLETE ALL EXCAVATION, ROAD LIFTS, CONSTRUCTION OF THE RAIL-HIGHWAY GRADING CROSSING AND INCIDENTALS, REMOVAL AND INSTALLATION OF TRAFFIC SIGNS, FILL, ROADWORK, CONSTRUCTION OF THE RAIL-HIGHWAY CROSSING ACTIVE WARNING SYSTEM AND INCIDENTALS, LANDSCAPING AND TRACKWORK WITHIN THE SEVEN DAY ROAD CLOSURE.

N

VT STATE PLANE GRID

LEGEND

- BARREL
- FLAGGER
- PORTABLE MESSAGE BOARD
- SIGN
- DIRECTION OF TRAFFIC
- WORK ZONE
- TYPE III CONSTRUCTION BARRICADE

PROJECT NAME: NEW HAVEN
PROJECT NUMBER: STP 2035 (19)

FILE NAME: zl3g606detour.dgn
PROJECT LEADER: R. O'BLENIS
DESIGNED BY: W. TSE
CONSTRUCTION APPROACH SIGNING SHEET

PLOT DATE: 2/15/2017
DRAWN BY: W. TSE
CHECKED BY: R. O'BLENIS
SHEET 29 OF 42

SOIL CLASSIFICATION

AASHTO	
A1	Gravel and Sand
A3	Fine Sand
A2	Silty or Clayey Gravel and Sand
A4	Silty Soil - Low Compressibility
A5	Silty Soil - Highly Compressible
A6	Clayey Soil - Low Compressibility
A7	Clayey Soil - Highly Compressible

ROCK QUALITY DESIGNATION

R.Q.D. (%)	ROCK DESCRIPTION
<25	Very Poor
25 to 50	Poor
51 to 75	Fair
76 to 90	Good
>90	Excellent

SHEAR STRENGTH

UNDRAINED SHEAR STRENGTH IN P.S.F.	CONSISTENCY
<250	Very Soft
250-500	Soft
500-1000	Med. Stiff
1000-2000	Stiff
2000-4000	Very Stiff
>4000	Hard

CORRELATION GUIDE OF "N" TO DENSITY/CONSISTENCY

DENSITY (GRANULAR SOILS)		CONSISTENCY (COHESIVE SOILS)	
N	DESCRIPTIVE TERM	N	DESCRIPTIVE TERM
<5	Very Loose	<2	Very Soft
5-10	Loose	2-4	Soft
11-24	Med. Dense	5-8	Med. Stiff
25-50	Dense	9-15	Stiff
>50	Very Dense	16-30	Very Stiff
		31-60	Hard
		>60	Very Hard

COMMONLY USED SYMBOLS

▼	Water Elevation
	Standard Penetration Boring
⊕	Auger Boring
⊙	Rod Sounding
S	Sample
N	Standard Penetration Test Blow Count Per Foot For: 2" O.D. Sampler 1 3/8" I.D. Sampler Hammer Weight Of 140 Lbs. Hammer Fall Of 30"
VS	Field Vane Shear Test
US	Undisturbed Soil Sample
B	Blast
DC	Diamond Core
MD	Mud Drill
WA	Wash Ahead
HSA	Hollow Stem Auger
AX	Core Size 1 1/8"
BX	Core Size 1 5/8"
NX	Core Size 2 1/8"
M	Double Tube Core Barrel Used
LL	Liquid Limit
PL	Plastic Limit
PI	Plasticity Index
NP	Non Plastic
w	Moisture Content (Dry Wgt. Basis)
D	Dry
M	Moist
MTW	Moist To Wet
W	Wet
Sat	Saturated
Bo	Boulder
Gr	Gravel
Sa	Sand
Si	Silt
Cl	Clay
HP	Hardpan
Le	Ledge
NLTD	No Ledge To Depth
CNPF	Can Not Penetrate Further
TLOB	Top of Ledge Or Boulder
NR	No Recovery
Rec.	Recovery
%Rec.	Percent Recovery
RQD	Rock Quality Designation
CBR	California Bearing Ratio
<	Less Than
>	Greater Than
R	Refusal (N > 100)
VTSPG	NAD83 - See Note 7

COLOR

blk	Black	pnk	Pink
bl	Blue	pu	Purple
brn	Brown	rd	Red
dk	Dark	tn	Tan
gry	Gray	wh	White
gn	Green	yel	Yellow
lt	Light	mltc	Multicolored
or	Orange		

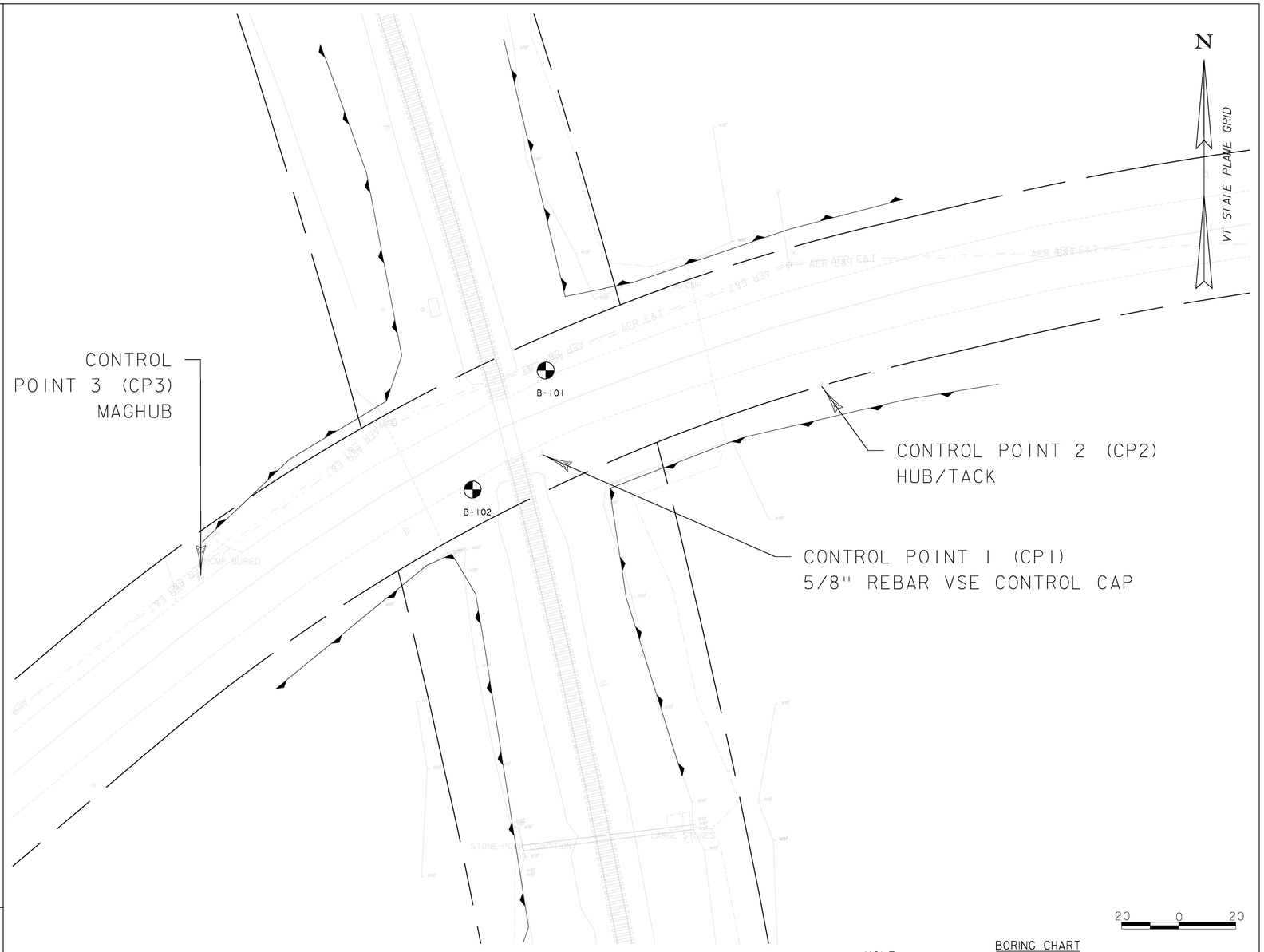

DEFINITIONS (AASHTO)

BEDROCK (LEDGE) - Rock in its native location of indefinite thickness.

BOULDER - A rock fragment with an average dimension > 12 inches.

COBBLE - Rock fragments with an average dimension between 3 and 12 inches.

GRAVEL - Rounded particles of rock < 3" and > 0.0787" (#10 sieve).

SAND - Particles of rock < 0.0787" (#10 sieve) and > 0.0029" (#200 sieve).

SILT - Soil < 0.0029" (#200 sieve), non or slightly plastic and exhibits no strength when air-dried.

CLAY - Fine grained soil, exhibits plasticity when moist and considerable strength when air-dried.

VARVED - Alternate layers of silt and clay.

HARDPAN - Extremely dense soil, cemented layer, not softened when wet.

MUCK - Soft organic soil (containing > 10% organic material.

MOISTURE CONTENT - Weight of water divided by dry weight of soil.

FLOWING SAND - Granular soil so saturated (loose) that it flows into drill casing during extraction of wash rod.

STRIKE - Angle from magnetic north to line of intersection of bed with a horizontal plane.

DIP - Inclination of bed with a horizontal plane.

1. The subsurface explorations shown herein will be made on August 2016 by Mikes Coring and Boring.

2. Soil and rock classifications, properties and descriptions are based on engineering interpretation from available subsurface information by Mikes Coring and Boring and the Agency and may not necessarily reflect actual variations in subsurface conditions that may be encountered between individual boring or sample locations.

3. Observed water levels and/or conditions indicated are as recorded at the time of exploration and may vary according to the prevailing rainfall, methods of exploration and other factors.

GENERAL NOTES

4. Engineering judgment was exercised in preparing the subsurface information presented herein. Analysis and interpretation of subsurface data was performed and interpreted for Agency design and estimating purposes. Presentation of the information in the Contract is intended to provide the Contractor access to the same data available to the Agency. The subsurface information is presented in good faith and is not intended as a substitute for personal investigation, independent interpretation, independent analysis or judgment by the Contractor.

5. Pictorial structure details shown on the boring plan layout or soils profile are for illustrative purposes only and may not accurately portray final contract details.

6. Terminology used on boring logs to describe the hardness, degree of weathering, and spacing of fractures, joints and other discontinuities in the bedrock is defined in the AASHTO Manual on Subsurface Investigations, 1988.

7. Northing and Easting coordinates are shown in Vermont State Plane Grid North American Datum 1983 in meters and survey feet.

BORING CHART

HOLE NO.	STATION	OFFSET	NORTHING	EASTING
B-101	3+61.75	14.24' LT	578713.94	1461004.32
B-102	3+20.70	12.30' RT	578672.24	1460978.73
CP 1	3+48.56	12.15' RT	578684.45	1461003.19
CP 2	4+51.26	24.02' RT	578708.40	1461101.01
CP 3	2+23.81	12.21' LT	578642.17	1460883.54

NOTE: BORING LOCATIONS ARE APPROXIMATE ACTUAL LOCATION TO BE DETERMINED IN THE FIELD

PROJECT NAME: NEW HAVEN
PROJECT NUMBER: STP 2035 (19)

FILE NAME: zl3g606bor.dgn
PROJECT LEADER: R. O'BLENIS
DESIGNED BY: W. TSE
BORING INFORMATION SHEET

PLOT DATE: 2/15/2017
DRAWN BY: W. TSE
CHECKED BY: R. O'BLENIS
SHEET 30 OF 42

STATE OF VERMONT
AGENCY OF TRANSPORTATION
CONSTRUCTION AND
MATERIALS BUREAU
CENTRAL LABORATORY

BORING LOG

New Haven
STP 2035(19)
RR crossing Campground Rd.

Boring No.: **B-101**
Page No.: 1 of 1
Pin No.: 13g606
Checked By: ZMH

Boring Crew: Mike McGinley
Date Started: 8/01/16 Date Finished: 8/01/16
VTSPG NAD83: N 578713.94 ft E 1461004.32 ft
Station: 3+61.75 Offset: -14.24
Ground Elevation: 331.6 ft

	Casing	Sampler
Type:	H.S.A.	SS
I.D.:	3.25 in	2 in
Hammer Wt:	N.A.	140 lb.
Hammer Fall:	N.A.	30 in.
Hammer/Rod Type:		
Rig:		C_E =

Groundwater Observations

Date	Depth (ft)	Notes
08/01/16	11.0	W.T. After Drilling

Depth (ft)	Strata (1)	CLASSIFICATION OF MATERIALS (Description)	Blows/6" (N Value)	Moisture Content %	Gravel %	Sand %	Fines %	LL %	PI %
		A-1-b, GrSa, brn, Dry, Rec. = 0.8 ft, Lab Note: Pieces of wood were within sample	2-2-7-4 (9)	2.8	45.1	46.9	8.0		
2.5		A-7-6, Cl, brn, Moist, Rec. = 1.2 ft, Lab Note: A small amount of decomposing wood was within sample	4-5-6-7 (11)	27.8	0.6	4.3	95.1	51	25
5.0		A-7-6, SiCl, brn, Moist, Rec. = 1.0 ft	6-6-6-7 (12)	25.3	3.2	24.4	72.4	42	19
7.5		A-7-6, Cl, brn-gry, Moist, Rec. = 1.3 ft	4-4-4-4 (8)	30.1	0.3	2.7	97.0	49	23
		A-7-6, Cl, brn-gry, Moist, Rec. = 1.9 ft	2-2-2-2 (4)	34.9	4.6	3.3	92.1	55	27
10.0		A-7-6, Cl, brn-gry, Wet, Rec. = 1.5 ft	2-3-3-3 (6)	42.6	0.2	1.6	98.2	63	35
12.5		A-4, SaSi, gry, Wet, Rec. = 1.7 ft, Lab Note: A lot of decomposing wood and some clay was within sample. Sample tested non-plastic	3-3-3-4 (6)	28.3	3.9	40.4	55.7		
15.0		A-7-6, Cl, gry, Wet, Rec. = 1.8 ft, Lab Note: A lot of decomposing wood was within sample. Sample contined clay and was similar to the 16-18 foot sample. Insufficient sample size to perform Atterberg limit tests	1-2-1-2 (3)	67.6	3.5	45.5	51.0		
17.5		A-7-6, Cl, gry, Wet, Rec. = 1.9 ft, Lab Note: Decomposing wood was within sample	4-6-6-3 (12)	48.0	0.2	1.7	98.1	50	27
		A-7-6, Cl, gry, Wet, Rec. = 1.9 ft, Lab Note: Decomposing wood was within sample	WH-1-WH-1 (1)	63.4	0.2	1.7	98.1	53	29
20.0		Hole stopped @ 20.0 ft							
22.5									

Remarks:
Borings performed and logged by Mike's Boring and Coring, LLC.

Notes:
1. Stratification lines represent approximate boundary between material types. Transition may be gradual.
2. N Values have not been corrected for hammer energy. C_E is the hammer energy correction factor.
3. Water level readings have been made at times and under conditions stated. Fluctuations may occur due to other factors than those present at the time measurements were made.

BORING LOG 2 NEW HAVEN STP 2035(19).GPJ VERMONT AOT.GDT 10/20/16

STATE OF VERMONT
AGENCY OF TRANSPORTATION
CONSTRUCTION AND
MATERIALS BUREAU
CENTRAL LABORATORY

BORING LOG

New Haven
STP 2035(19)
RR crossing Campground Rd.

Boring No.: **B-102**
Page No.: 1 of 1
Pin No.: 13g606
Checked By: ZMH

Boring Crew: Mike McGinley
Date Started: 8/01/16 Date Finished: 8/01/16
VTSPG NAD83: N 578672.24 ft E 1460978.73 ft
Station: 3+20.70 Offset: 12.30
Ground Elevation: 331.74 ft

	Casing	Sampler
Type:	H.S.A.	SS
I.D.:	3.25 in	2 in
Hammer Wt:	N.A.	140 lb.
Hammer Fall:	N.A.	30 in.
Hammer/Rod Type:		
Rig:		C_E =

Groundwater Observations

Date	Depth (ft)	Notes
08/01/16	11.5	W.T. after drilling

Depth (ft)	Strata (1)	CLASSIFICATION OF MATERIALS (Description)	Blows/6" (N Value)	Moisture Content %	Gravel %	Sand %	Fines %	LL %	PI %
		A-1-b, SaGr, brn, Dry, Rec. = 1.3 ft	4-6-4-5 (10)	3.0	46.2	36.8	17.0		
2.5		A-1-b, GrSa, brn, Dry, Rec. = 1.2 ft	4-6-6-7 (12)	7.8	33.3	49.1	17.6		
5.0		A-6, SiCl, brn, Moist, Rec. = 1.7 ft	3-5-5-7 (10)	26.7	3.7	5.4	90.9	36	12
7.5		A-6, SiCl, brn, Moist, Rec. = 1.2 ft	7-13-7-5 (20)	23.9	27.2	17.0	55.8	35	11
		A-7-6, SiCl, brn, Moist, Rec. = 0.7 ft	3-5-6-7 (11)	27.8	2.9	7.0	90.1	41	18
10.0		A-7-6, Cl, brn-gry, Moist, Rec. = 1.8 ft	2-2-2-2 (4)	40.1	3.1	1.9	95.0	54	26
12.5		A-7-6, Cl, gry, Wet, Rec. = 1.5 ft	5-2-2-3 (4)	40.5	0.2	0.6	99.2	52	32
15.0		A-7-6, Cl, gry, Wet, Rec. = 1.9 ft, Lab Note: Some decomposing wood was within sample	2-2-2-3 (4)	37.3	0.2	1.8	98.0	50	25
17.5		A-7-6, Cl, gry, Wet, Rec. = 1.9 ft, Lab Note: Some clay and a lot of decomposing wood was within sample. Sample was similar material to 14-16 foot sample. Insufficient sample size to perform Atterberg limit tests	4-3-3-5 (6)	73.4	0.1	1.7	98.2		
		A-4, SaSi, gry, Wet, Rec. = 1.9 ft, Lab Note: Some clay was within sample. Sample tested non-plastic	4-5-5-5 (10)	19.7	0.1	35.8	64.1		
20.0		Hole stopped @ 20.0 ft							
22.5									

Remarks:
Borings performed and logged by Mike's Boring and Coring, LLC.

Notes:
1. Stratification lines represent approximate boundary between material types. Transition may be gradual.
2. N Values have not been corrected for hammer energy. C_E is the hammer energy correction factor.
3. Water level readings have been made at times and under conditions stated. Fluctuations may occur due to other factors than those present at the time measurements were made.

BORING LOG 2 NEW HAVEN STP 2035(19).GPJ VERMONT AOT.GDT 10/20/16

PROJECT NAME: NEW HAVEN
PROJECT NUMBER: STP 2035 (19)

FILE NAME: zl3g606bor.dgn
PROJECT LEADER: R. O'BLENIS
DESIGNED BY: W. TSE
BORING LOGS

PLOT DATE: 2/15/2017
DRAWN BY: W. TSE
CHECKED BY: R. O'BLENIS
SHEET 31 OF 42

SIGNAL PLANS

SH. NO.	SHEET DESCRIPTION	REVISION NO.						
		1	2	3	4	5	6	7
32	INDEX & REVISIONS							
33	CROSSING LAYOUT PLAN							
34	TRACK CONNECTIONS							
35	GATE CONTROL							
36	SIGNAL "A" WIRING							
37	SIGNAL "B" WIRING							
38	AC POWER DISTRIBUTION							
39	DC POWER DISTRIBUTION							
40	HOUSE & RACK LAYOUTS							
41	WALL LAYOUTS							
42	TYP. CROSSING SIGNAL							

PROJECT NAME: NEW HAVEN
PROJECT NUMBER: STP. 2035(19)

FILE NAME:INDEX & REVISIONS.dgn
PROJECT LEADER:
DESIGNED BY: D.W.S.
SIGNAL PLANS-INDEX & REVISIONS

PLOT DATE: 02/15/17
DRAWN BY: J.L.S.
CHECKED BY: K.N.
SHEET 32 OF 42

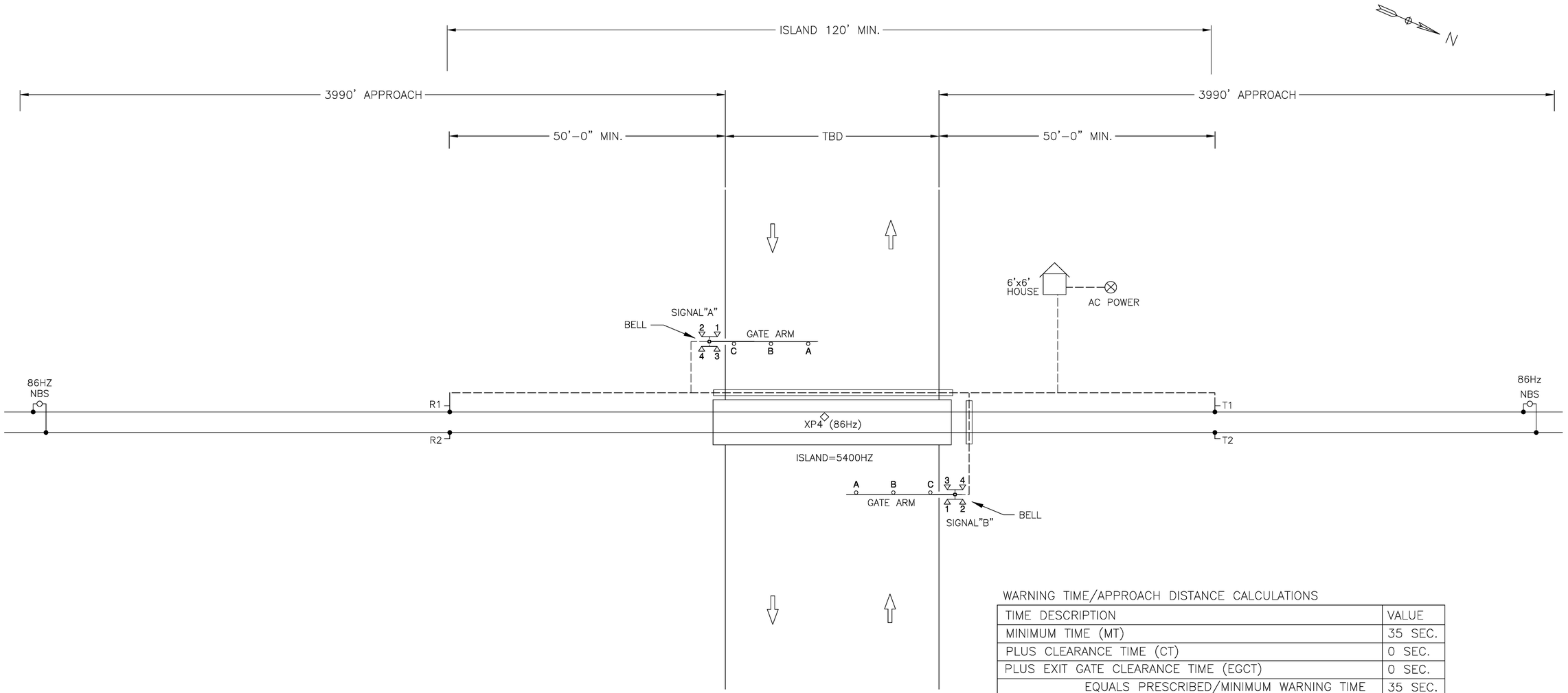

UNDERGROUND CABLE REQUIREMENTS

UG	CABLE DESCRIPTION	FROM – TO
1	1ea. 2C#6 AWG TWISTED PAIR	HOUSE TO TRACK CONNECTION BOX T1 & T2
2	1ea. 2C#6 AWG TWISTED PAIR	HOUSE TO TRACK CONNECTION BOX R1 & R2
3	1ea. 5C#6 AWG & 1ea. 9C#9 AWG	HOUSE TO SIGNAL "A"
4	1ea. 5C#6 AWG & 1ea. 9C#9 AWG	HOUSE TO SIGNAL "B"
5	1ea. 3C#4 AWG WITH #8 GND	HOUSE TO AC POWER SERVICE

WARNING TIME/APPROACH DISTANCE CALCULATIONS

TIME DESCRIPTION	VALUE
MINIMUM TIME (MT)	35 SEC.
PLUS CLEARANCE TIME (CT)	0 SEC.
PLUS EXIT GATE CLEARANCE TIME (EGCT)	0 SEC.
EQUALS PRESCRIBED/MINIMUM WARNING TIME	35 SEC.
PLUS BUFFER TIME (BT)	0 SEC.
PLUS EQUIPMENT RESPONSE TIME – ACQUISITION (ERT-A)	5 SEC.
PLUS EQUIPMENT RESPONSE TIME – CONTROL (ERT-C)	3 SEC.
PLUS EQUIPMENT RESPONSE TIME – DELAY (ERT-D)	3 SEC.
PLUS ADVANCE PREEMPTION TIME (APT)	0 SEC.
EQUALS SYSTEM DESIGN TIME	46 SEC.

TOTAL APPROACH DISTANCE (FEET) = SYSTEM DESIGN TIME (SEC.) * MAS (MPH) * 1.47 ([FT/SEC]/MPH)
= 46 SEC. * 59 MPH * 1.47 [FT./SEC]/MPH
= 3,990 FEET (CALCULATED PER AREMA C&S MANUAL PART 3.3.10)

PROJECT NAME: NEW HAVEN
PROJECT NUMBER: STP. 2035(19)

FILE NAME:CROSSING LAYOUT PLAN.dgn PLOT DATE: 02/15/17
PROJECT LEADER: DRAWN BY: J.L.S.
DESIGNED BY: D.W.S. CHECKED BY: K.N.
SIGNAL PLANS-CROSSING LAYOUT PLAN SHEET 33 OF 42

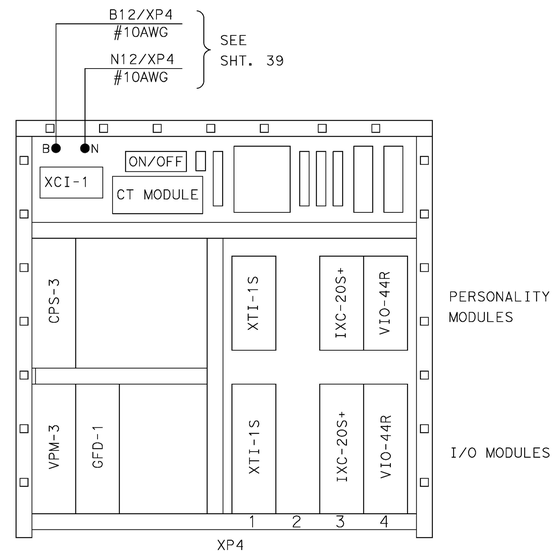

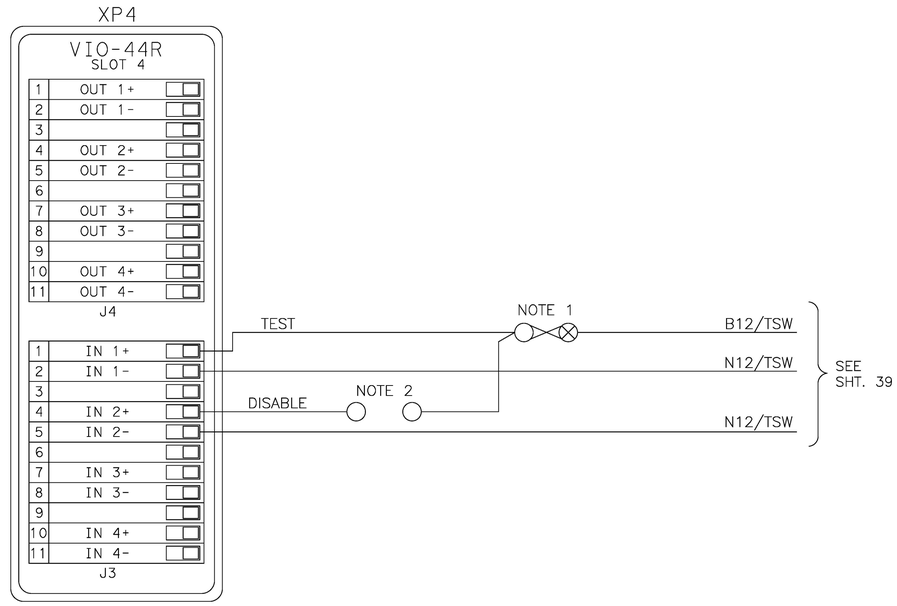

NOTE 1: TEST LINK/GOLD NUT NORMALLY CLOSED. TO ACTIVATE WARNING SYSTEM FOR TEST PURPOSES, OPEN GOLD NUT.

NOTE 2: NORMALLY OPEN. TO DISABLE WARNING SYSTEM, JUMPER TERMINAL POSTS TOGETHER.

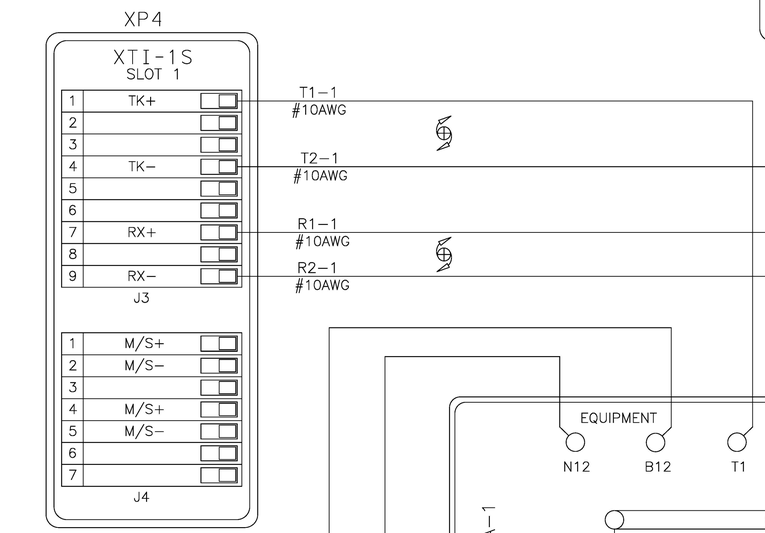

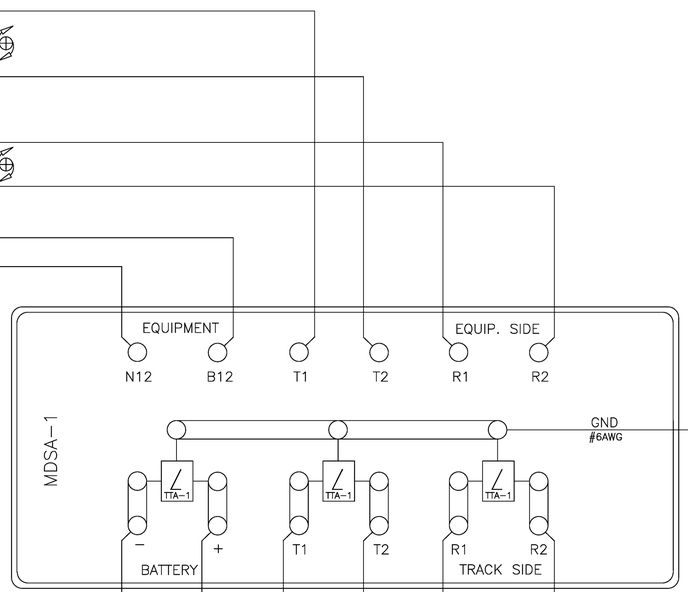

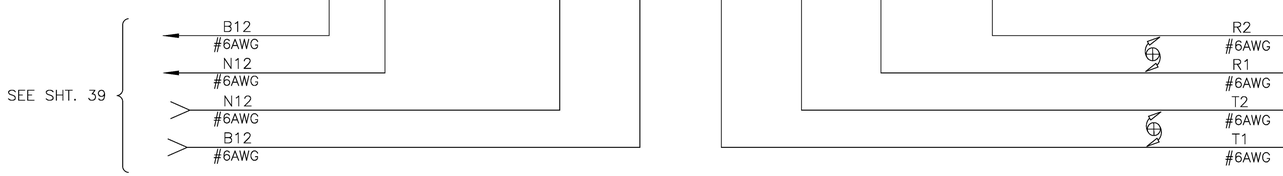

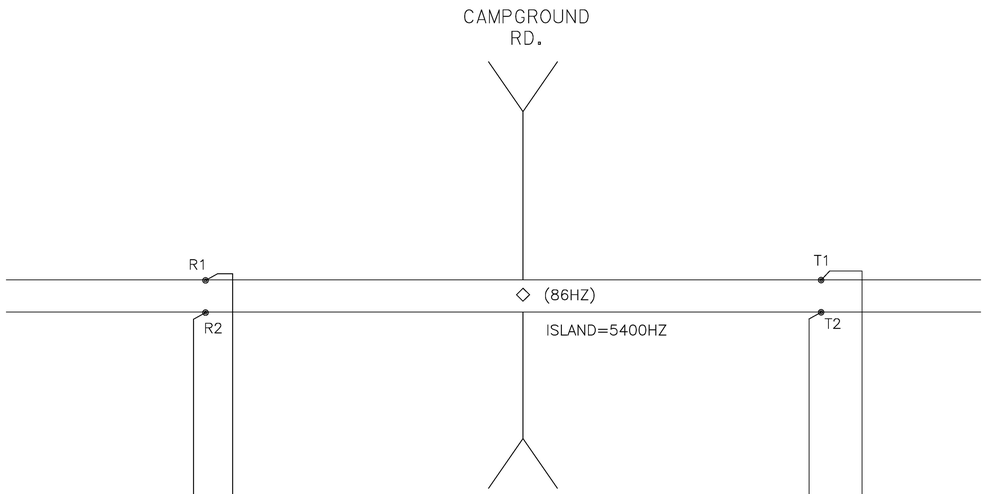

PROJECT NAME:	NEW HAVEN
PROJECT NUMBER:	STP. 2035(19)
FILE NAME:TRACK CONNECTIONS.dgn	PLOT DATE: 02/15/17
PROJECT LEADER:	DRAWN BY: J.L.S.
DESIGNED BY: D.W.S.	CHECKED BY: K.N.
SIGNAL PLANS-TRACK CONNECTIONS	SHEET 34 OF 42

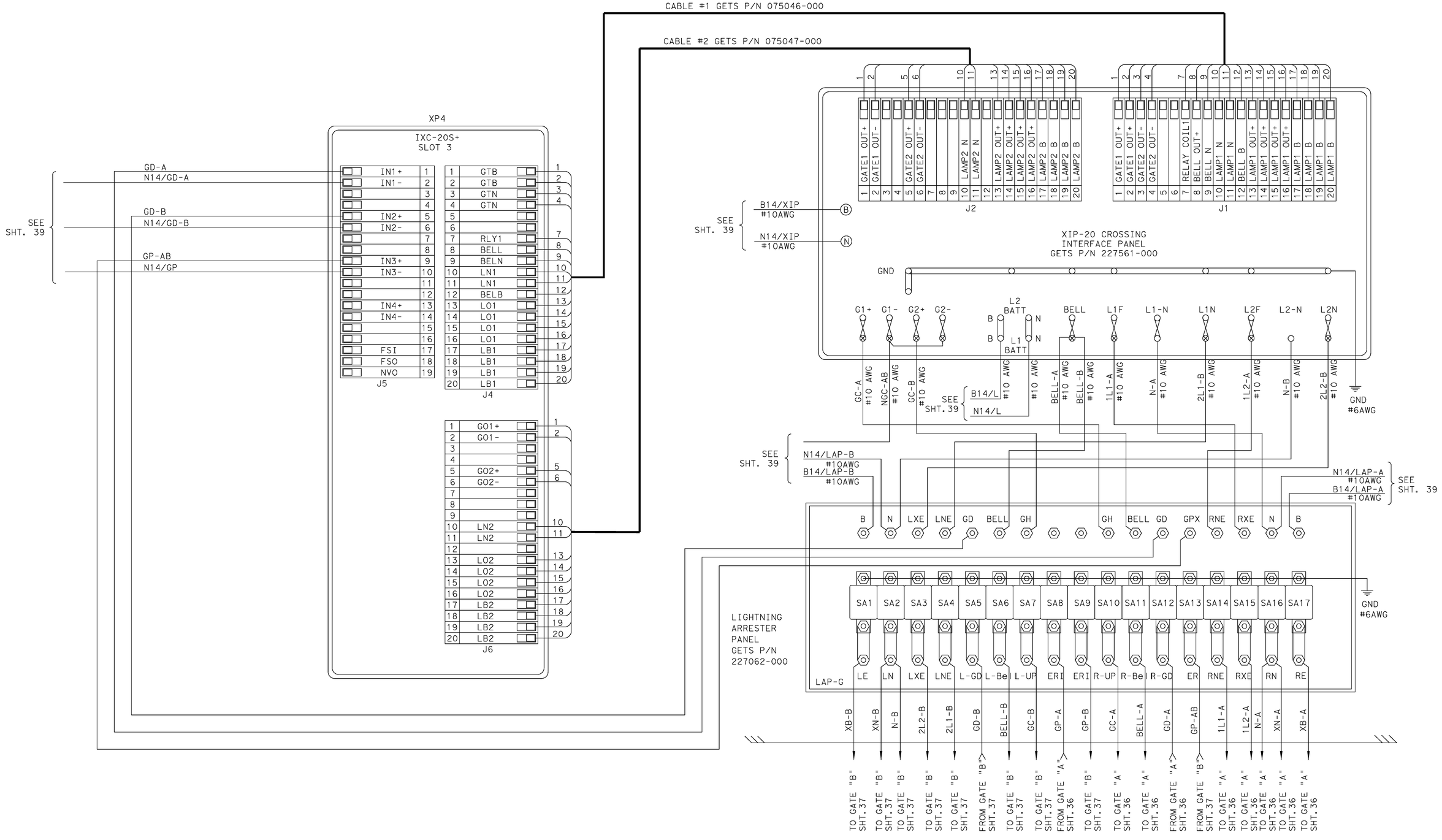

NOTE: ALL WIRING #16AWG UNLESS OTHERWISE NOTED.

PROJECT NAME: NEW HAVEN	
PROJECT NUMBER: STP. 2035(19)	
FILE NAME: GATE CONTROL.dgn	PLOT DATE: 02/15/17
PROJECT LEADER:	DRAWN BY: J.L.S.
DESIGNED BY: D.W.S.	CHECKED BY: K.N.
SIGNAL PLANS-GATE CONTROL	SHEET 35 OF 42

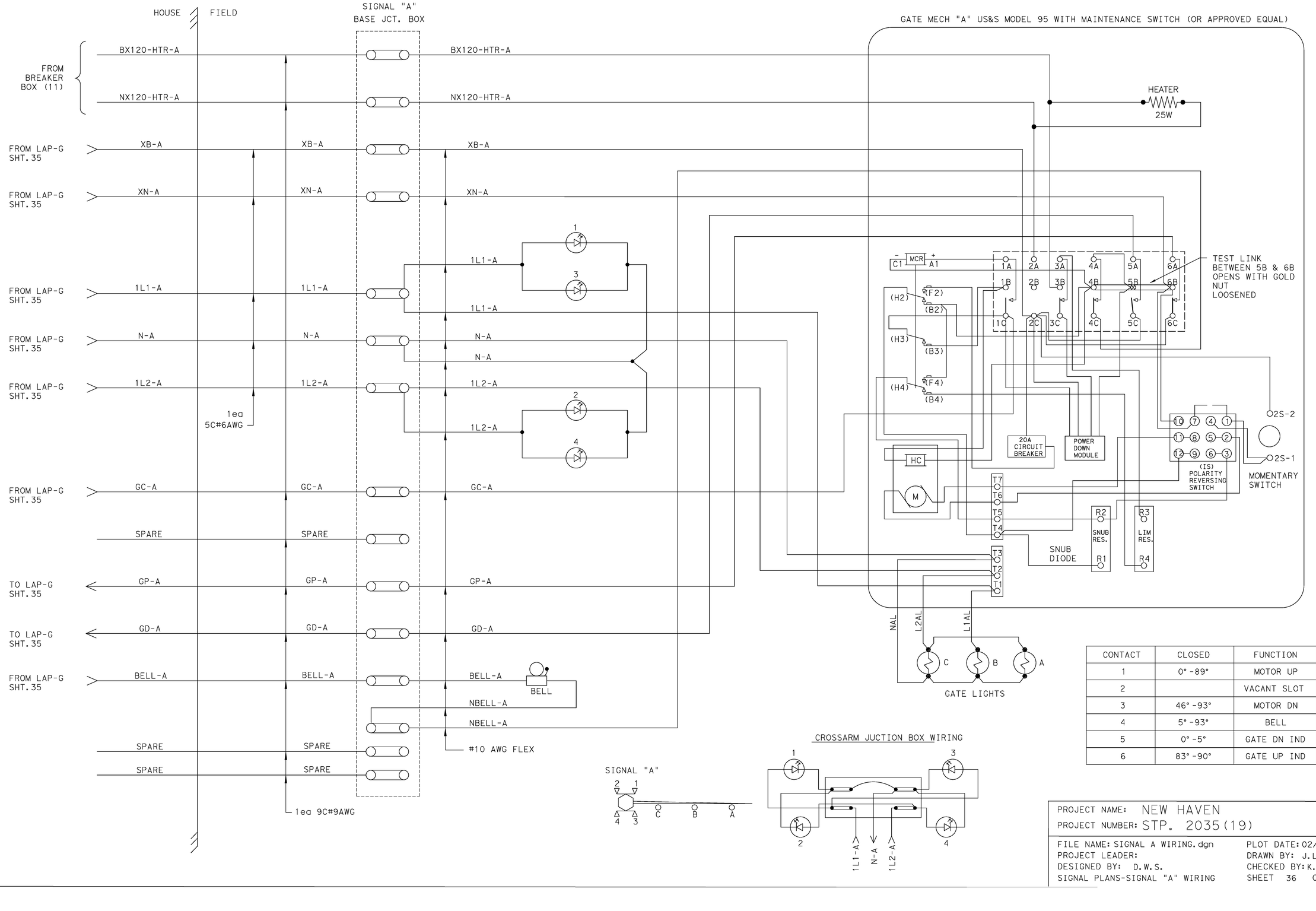

CONTACT	CLOSED	FUNCTION
1	0° - 89°	MOTOR UP
2		VACANT SLOT
3	46° - 93°	MOTOR DN
4	5° - 93°	BELL
5	0° - 5°	GATE DN IND
6	83° - 90°	GATE UP IND

PROJECT NAME: NEW HAVEN
PROJECT NUMBER: STP. 2035(19)

FILE NAME: SIGNAL A WIRING.dgn
PROJECT LEADER:
DESIGNED BY: D.W.S.
SIGNAL PLANS-SIGNAL "A" WIRING

PLOT DATE: 02/15/17
DRAWN BY: J.L.S.
CHECKED BY: K.N.
SHEET 36 OF 42

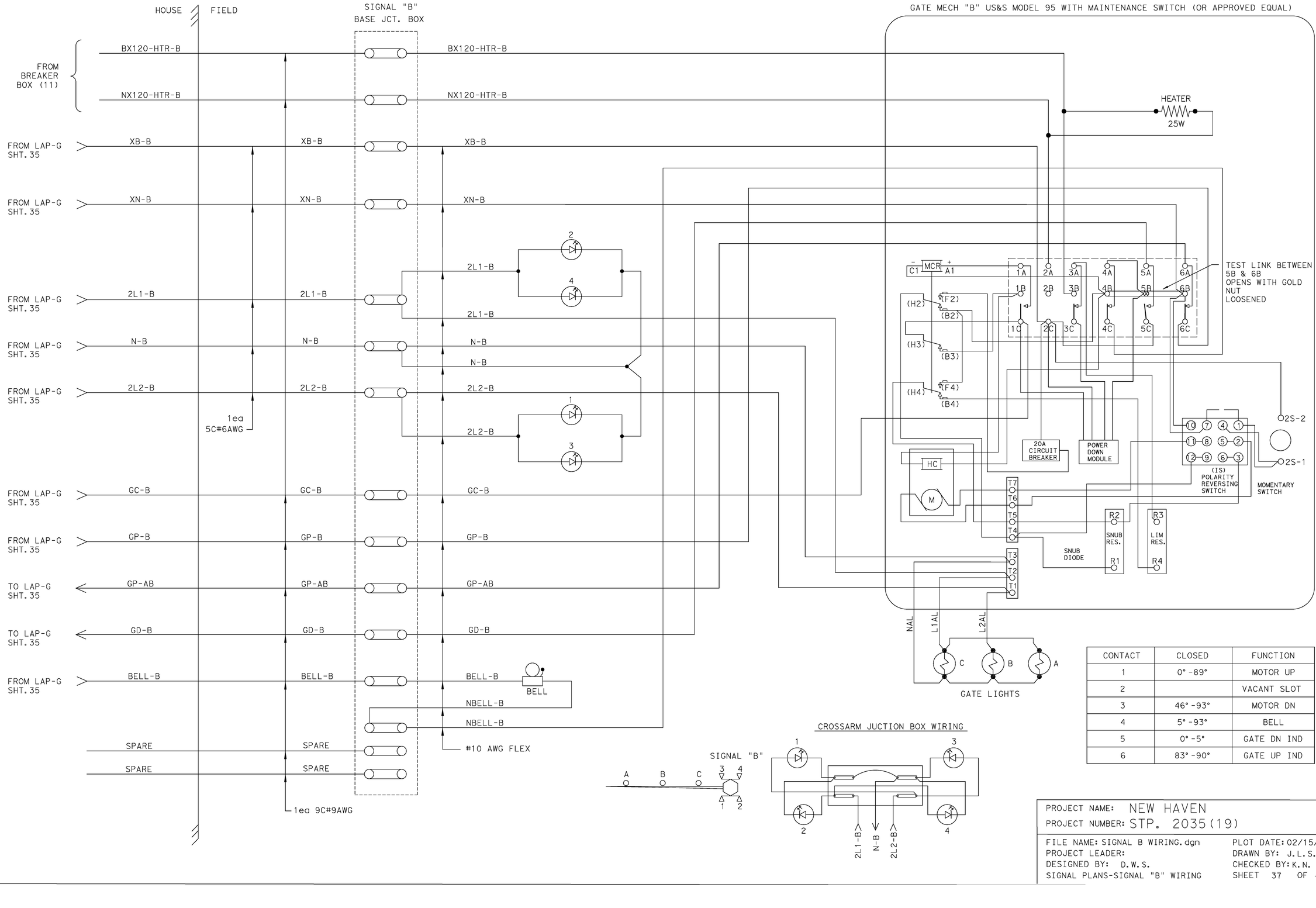

CONTACT	CLOSED	FUNCTION
1	0° -89°	MOTOR UP
2		VACANT SLOT
3	46° -93°	MOTOR DN
4	5° -93°	BELL
5	0° -5°	GATE DN IND
6	83° -90°	GATE UP IND

PROJECT NAME: NEW HAVEN
PROJECT NUMBER: STP. 2035(19)

FILE NAME: SIGNAL B WIRING.dgn
PROJECT LEADER:
DESIGNED BY: D.W.S.
SIGNAL PLANS-SIGNAL "B" WIRING

PLOT DATE: 02/15/17
DRAWN BY: J.L.S.
CHECKED BY: K.N.
SHEET 37 OF 42

120/240V SERVICE (SINGLE PHASE)

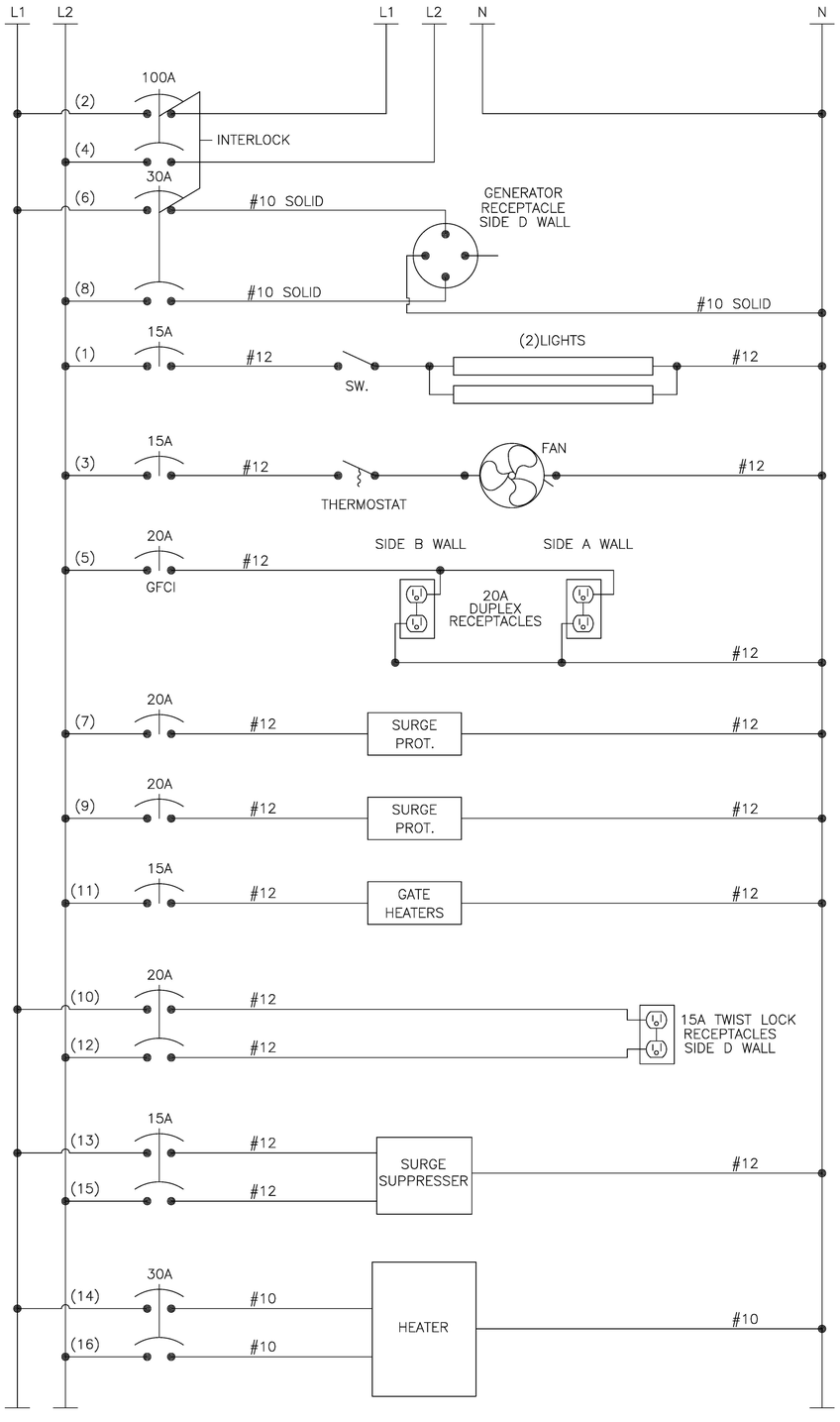

BREAKER BOX DISTRIBUTION
SCHNEIDER QO124M100 LOAD CENTER

1	15A LIGHTS	100A MAIN	2
3	15A FAN		4
5	20A GFI RECEPTACLES	30A GENERATOR RECEPTACLE	6
7	20A B14 BATT. CHGR.		8
9	20A B12 BATT. CHGR.	20A TWIST LOCK RECEPTACLE	10
11	15A GATE HEATERS		12
13	15A SURGE SUPPRESSER	30A HEATER	14
15			16
17	SPARE	SPARE	18
19	SPARE	SPARE	20
21	SPARE	SPARE	22
23	SPARE	SPARE	24

INTERLOCK

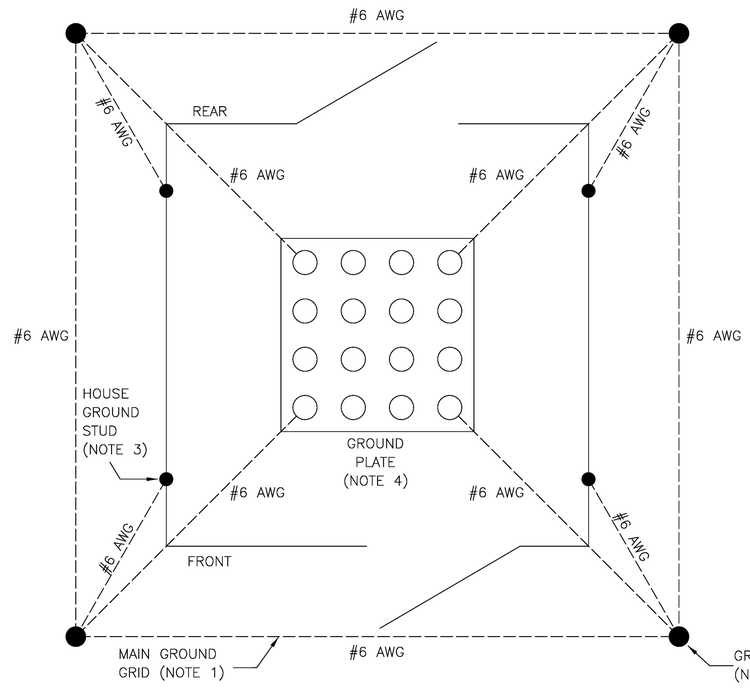

NOTES:

1. MAIN GROUND GRID SHALL BE COMPRISED OF #6AWG BARE SOLID COPPER WIRE, BURIED A MINIMUM OF 30" BELOW TOP OF FINISHED GRADE.
2. GROUND RODS (QTY. OF 4) SHALL BE 5/8" DIAMETER x 10' LONG COPPER.
3. HOUSE GROUND STUDS (QTY. OF 4) TO BE PROVIDED. #6AWG BARE COPPER SOLID WIRE SHALL BE USED TO CONNECT THE STUDS TO THEIR RESPECTIVE GROUND RODS.
4. HOUSE GROUND PLATE (QTY. OF 1) TO BE CONNECTED TO EACH GROUND ROD WITH #6AWG BARE COPPER SOLID WIRE.

PROJECT NAME: NEW HAVEN
PROJECT NUMBER: STP. 2035(19)

FILE NAME:AC POWER DISTRIBUTION.dgn PLOT DATE: 02/15/17
PROJECT LEADER: DRAWN BY: J.L.S.
DESIGNED BY: D.W.S. CHECKED BY: K.N.
SIGNAL PLANS-AC POWER DISTRIBUTION SHEET 38 OF 42

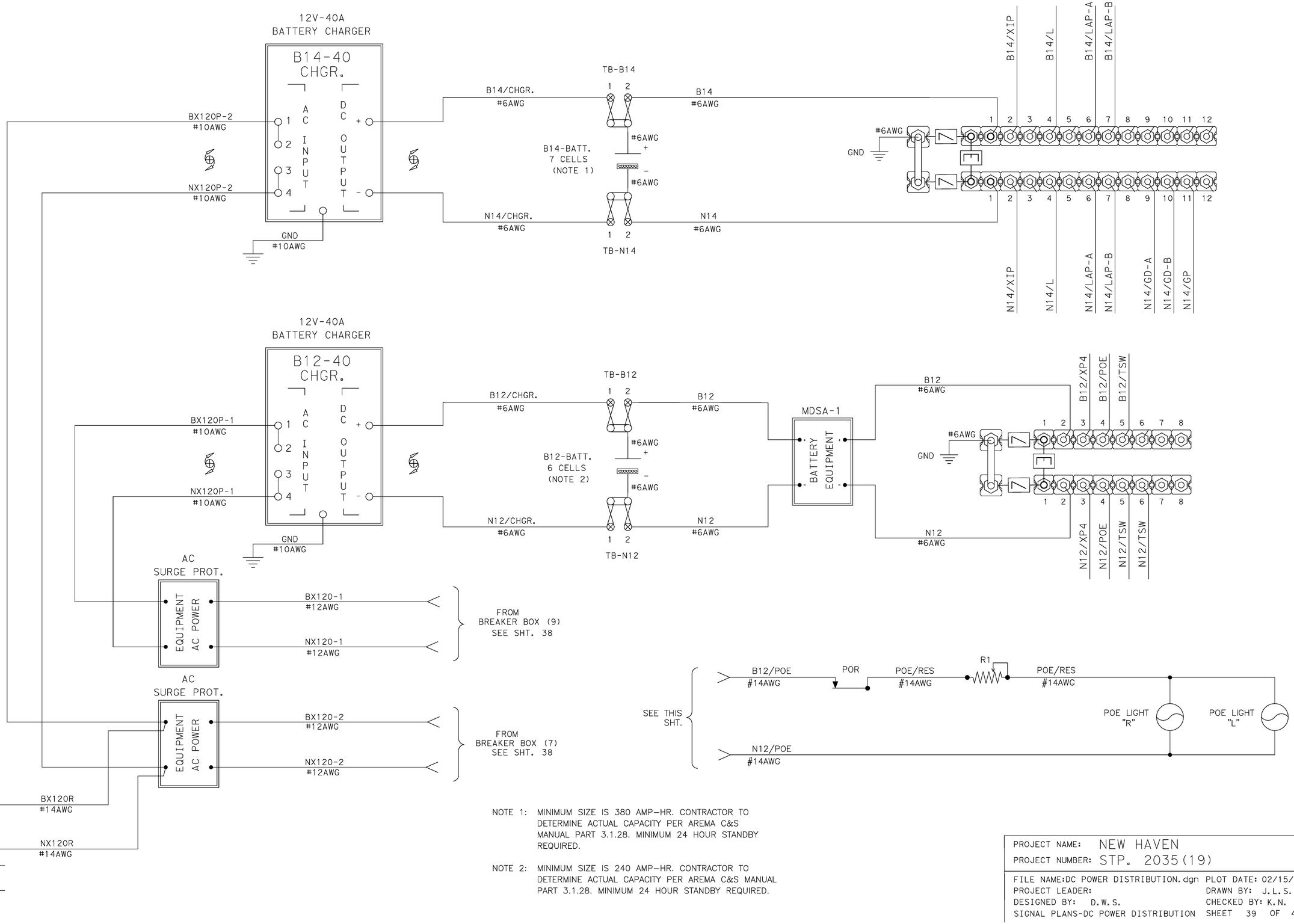

NOTE 1: MINIMUM SIZE IS 380 AMP-HR. CONTRACTOR TO DETERMINE ACTUAL CAPACITY PER AREMA C&S MANUAL PART 3.1.28. MINIMUM 24 HOUR STANDBY REQUIRED.

NOTE 2: MINIMUM SIZE IS 240 AMP-HR. CONTRACTOR TO DETERMINE ACTUAL CAPACITY PER AREMA C&S MANUAL PART 3.1.28. MINIMUM 24 HOUR STANDBY REQUIRED.

PROJECT NAME: NEW HAVEN
PROJECT NUMBER: STP. 2035(19)

FILE NAME:DC POWER DISTRIBUTION.dgn PLOT DATE: 02/15/17
PROJECT LEADER: DRAWN BY: J.L.S.
DESIGNED BY: D.W.S. CHECKED BY: K.N.
SIGNAL PLANS-DC POWER DISTRIBUTION SHEET 39 OF 42

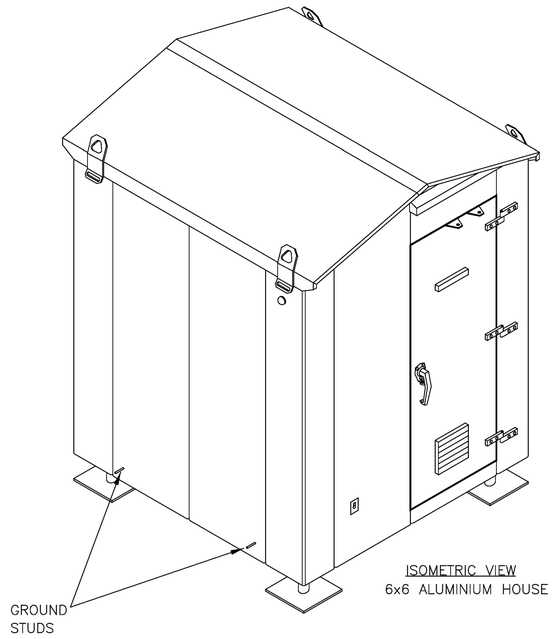

ISOMETRIC VIEW
6x6 ALUMINIUM HOUSE

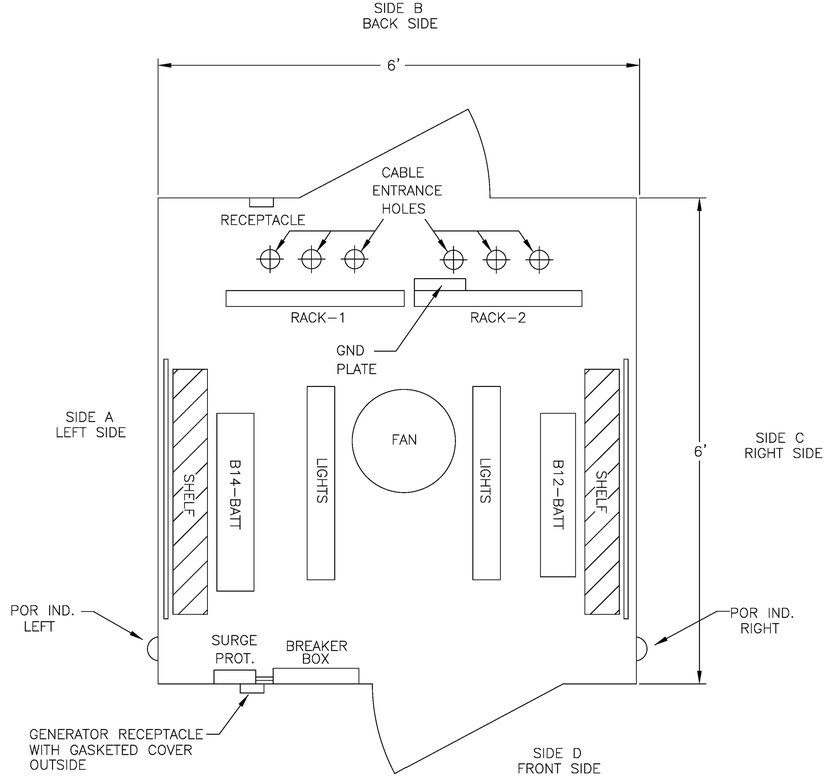

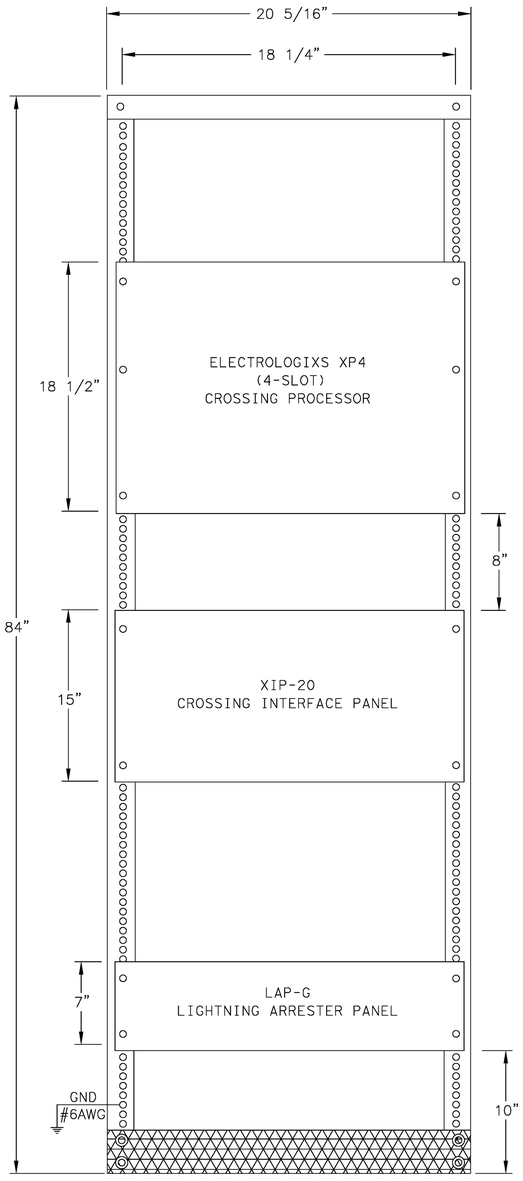

RACK-1
FRONT VIEW
(NOT TO SCALE)

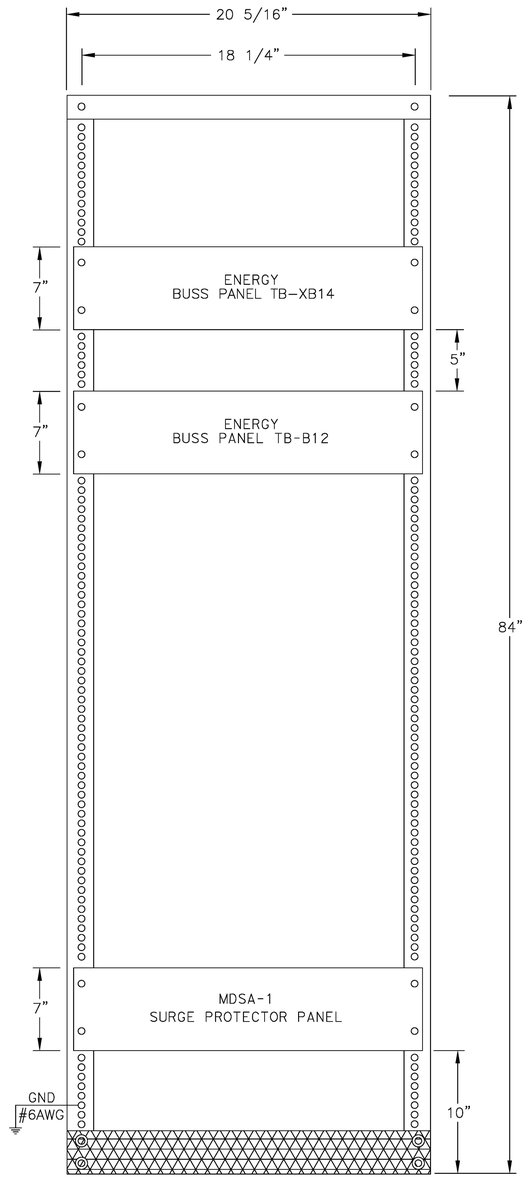

RACK-2
FRONT VIEW
(NOT TO SCALE)

PROJECT NAME: NEW HAVEN	
PROJECT NUMBER: STP. 2035(19)	
FILE NAME: HOUSE & RACK LAYOUTS.dgn	PLOT DATE: 02/15/17
PROJECT LEADER:	DRAWN BY: J.L.S.
DESIGNED BY: D.W.S.	CHECKED BY: K.N.
SIGNAL PLANS-HOUSE & RACK LAYOUTS	SHEET 40 OF 42

SIDE "A" WALL

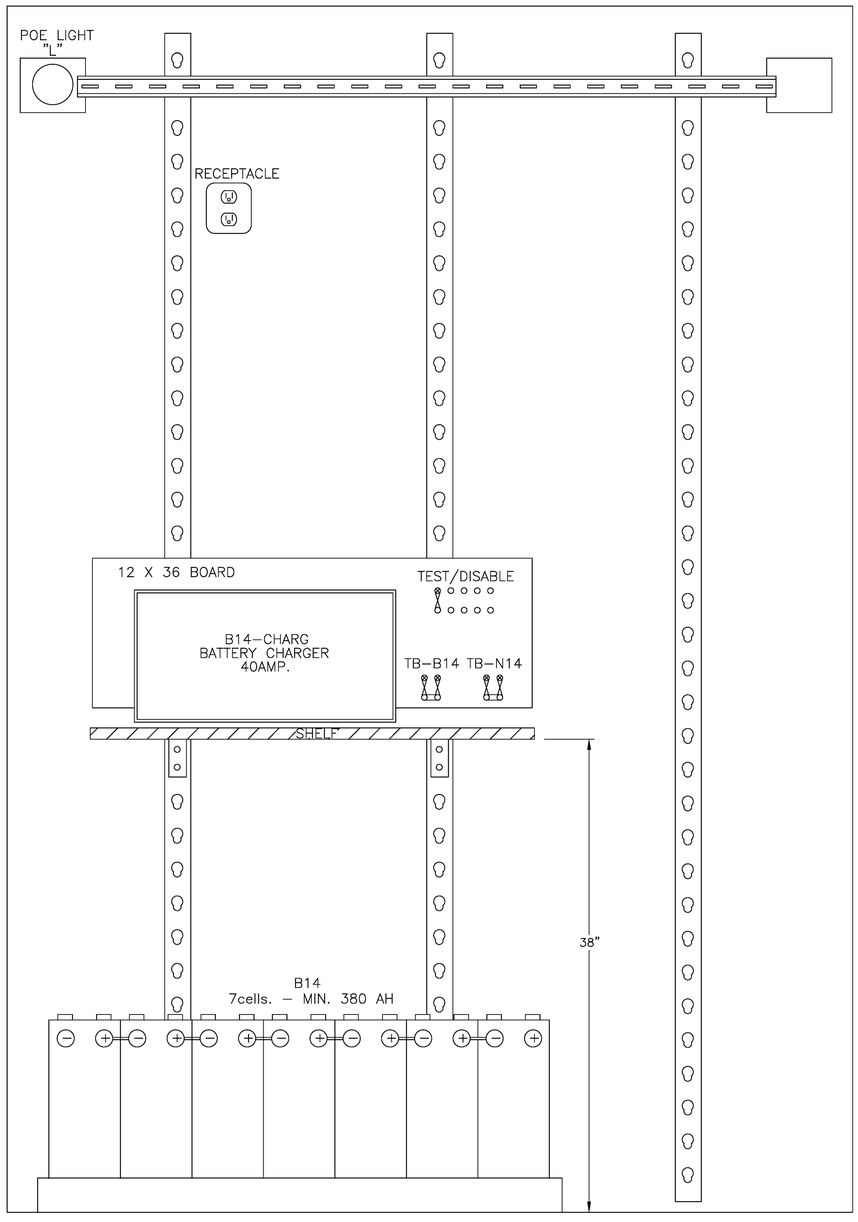

SIDE "C" WALL

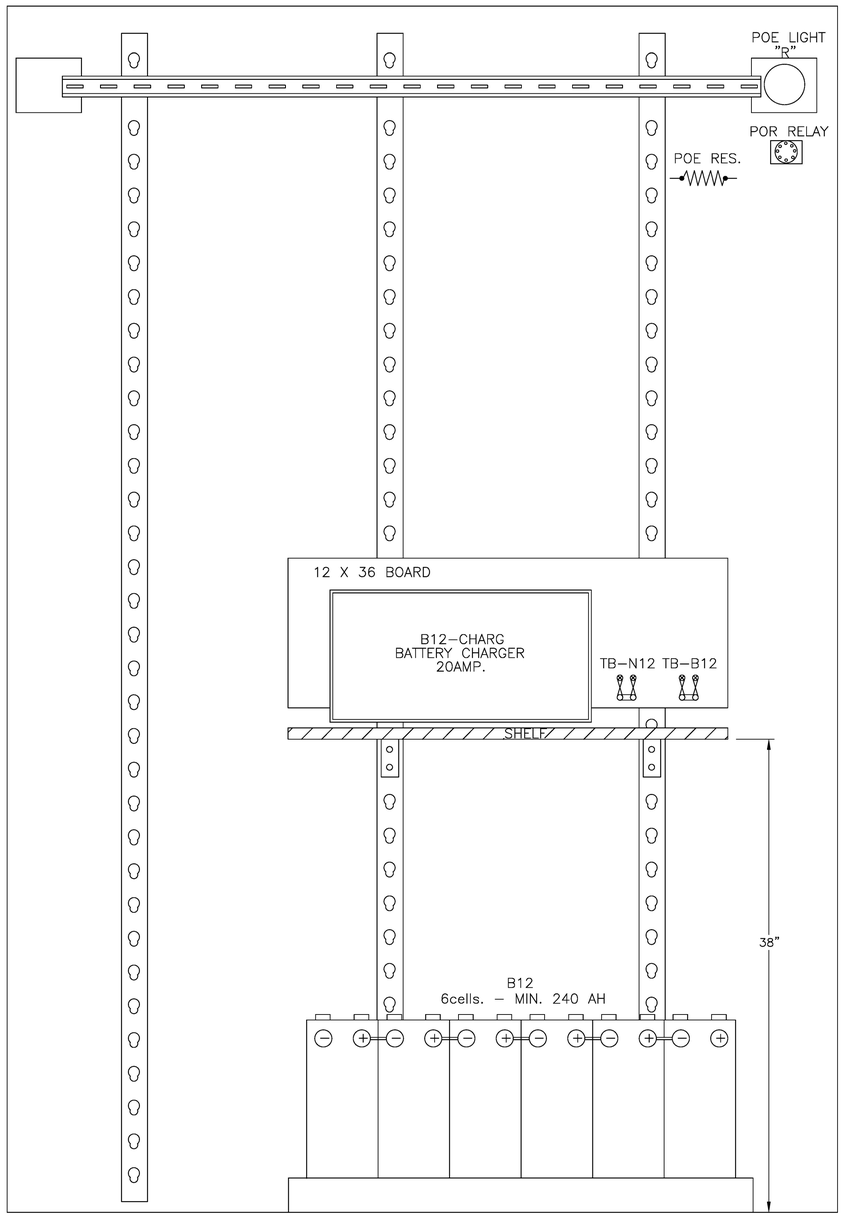

SIDE "D" WALL

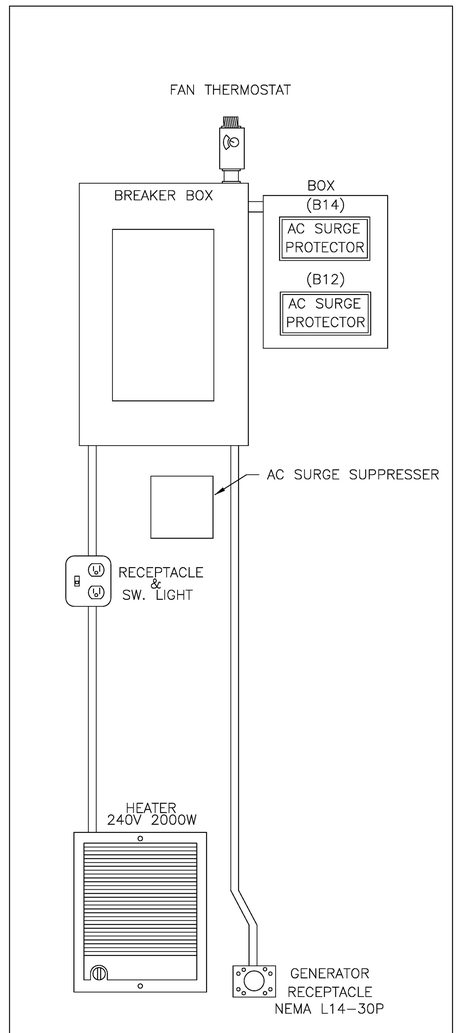

PROJECT NAME:	NEW HAVEN
PROJECT NUMBER:	STP. 2035(19)
FILE NAME: WALL LAYOUTS.dgn	PLOT DATE: 02/15/17
PROJECT LEADER:	DRAWN BY: J.L.S.
DESIGNED BY: D.W.S.	CHECKED BY: K.N.
SIGNAL PLANS-WALL LAYOUTS	SHEET 41 OF 42

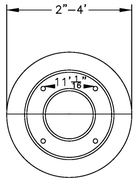

TOP PLAN

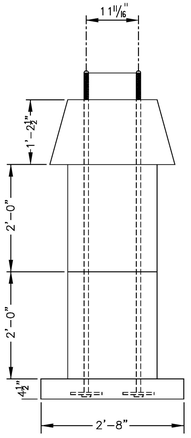

FRONT VIEW

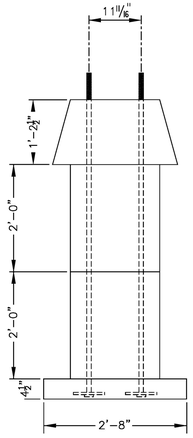

SIDE VIEW

NOTES:

1. FOUNDATIONS SHALL BE DESIGNED USING THE GEOTECHNICAL PARAMETERS PROVIDED IN THE VTRANS GEOTECHNICAL REPORT FOR THIS PROJECT INCLUDED IN THE CONTRACT DOCUMENTS.
2. FOUNDATION DESIGN SHALL BE SUBMITTED TO THE ENGINEER AND APPROVED PRIOR TO FABRICATION OR CONSTRUCTION.
3. ALL WORK ASSOCIATED WITH THE DESIGN AND INSTALLATION OF FOUNDATIONS FOR THE MAST ARMS WILL BE INCLUDED IN THE UNIT PRICE BID FOR ITEM 900.620 RAILROAD FLASHER SIGNALS WITH GATES.
4. DRAWINGS NOT FOR CONSTRUCTION PURPOSES, FOR BID PURPOSES ONLY. CONTRACTOR TO PROVIDE FINAL DETAIL DESIGN IN ACCORDANCE WITH SPECIAL PROVISION RAILROAD FLASHER SIGNALS WITH GATES.

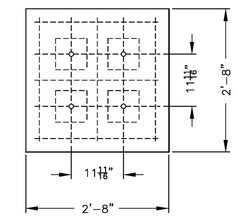

BASE PLAN

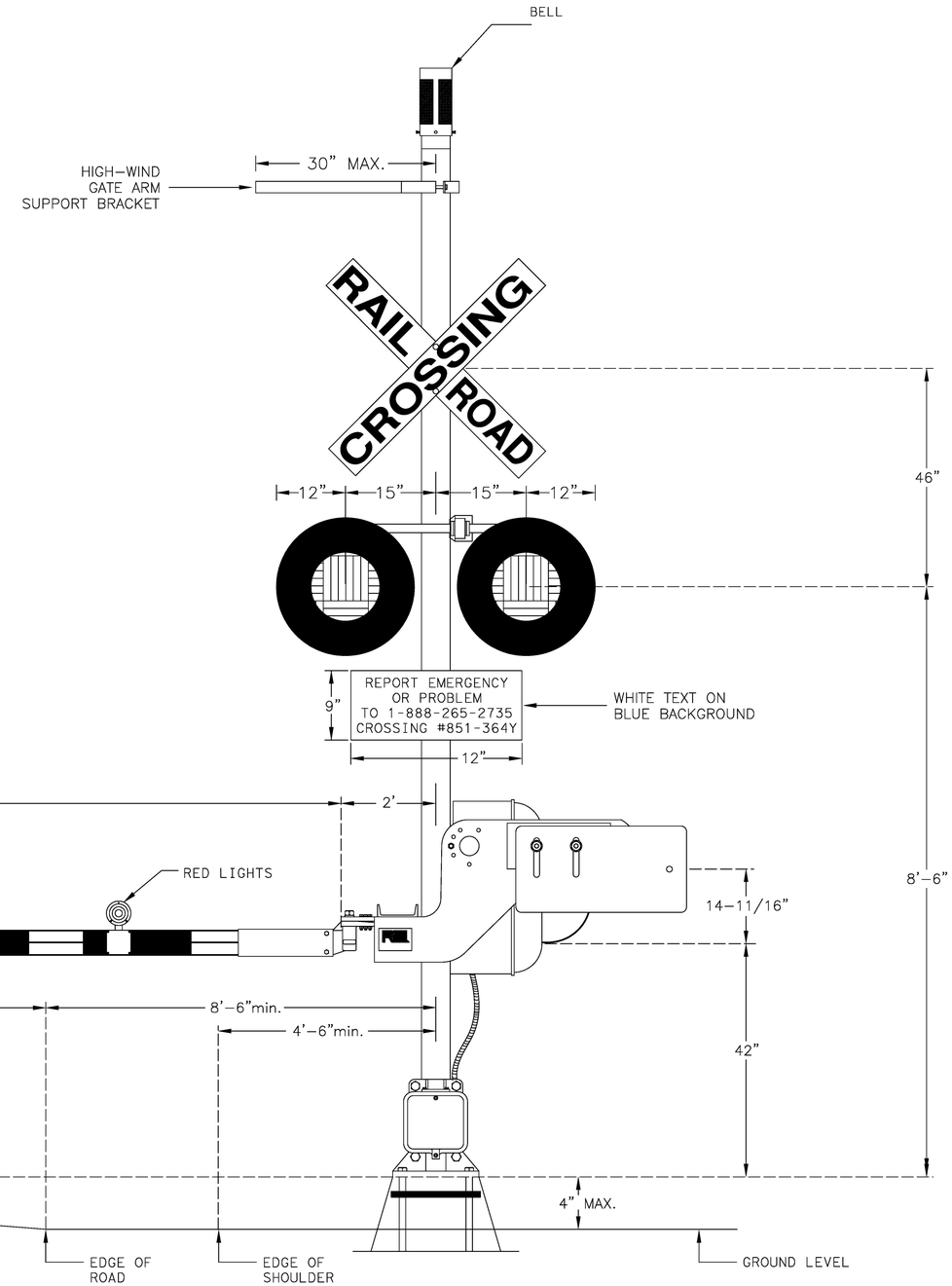

PROJECT NAME:	NEW HAVEN
PROJECT NUMBER:	STP. 2035(19)
FILE NAME: TYPICAL XING SIGNAL.dgn	PLOT DATE: 02/15/17
PROJECT LEADER:	DRAWN BY: J.L.S.
DESIGNED BY: D.W.S.	CHECKED BY: K.N.
SIGNAL PLANS-TYP. CROSSING SIGNAL	SHEET 42 OF 42

ENGINEERS CONSTRUCTION, INC.

Submittal Cover Sheet

Submittal Title:	**Rail-Highway Crossing Active Warning System**
Project Name:	**New Haven STP 2035(19)**
Date:	**July 26, 2017**
ECI Submittal Reference Number:	**172570-10-Rev02**
Manufacturer / Supplier / Subcontractor:	Alstom - Transportation Information Solutions
Specification / Drawing References:	
Submittal Prepared By:	**Matthew Cyganiewicz**

☑ This submittal is not a proposed substitution or deviation from the Contract Documents.

☐ This submission includes a proposed deviation from the Contract Documents as clearly identified in this submittal.

The undersigned attests that the undersigned has carefully examined this entire submission, and the requirements of the Contract Documents have been met.

By: Matthew Cyganiewicz

Digitally signed by Matthew Cyganiewicz
DN: C=US, E=mcygan@ecivt.com, O="Engineers Construction, INC.", CN=Matthew Cyganiewicz
Reason: I am approving this document
Date: 2017.07.26 12:37:11-04'00'

Matthew Cyganiewicz/ Assistant Project Manager

P.O. BOX 2187 • SOUTH BURLINGTON, VT 05407
PHONE: (802) 863-6389 • FAX: (802) 862-9703 • www.engineersconstruction.com

Sales Drawing

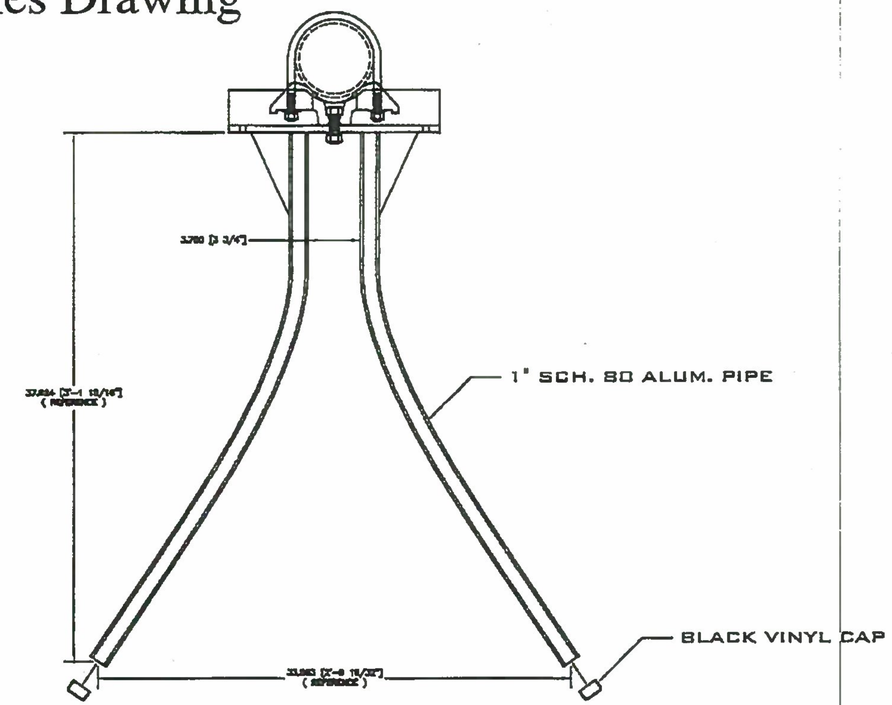

TOP VIEW

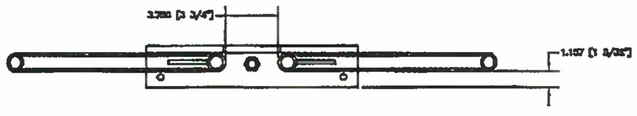

FRONT VIEW



RIGHT SIDE VIEW

Please note for future submittals rotate pages to be correct orientation and include a submittal letter, submittal #, project & pay item reference, date, etc...
Also, include page # so comments can be directly referenced.

PART # 9459001501	PROGRESS SIGNAL DIVISION		
THE DRAWING IS PROPRIETARY PROPERTY OF PROGRESS RAIL SERVICES	DATE: 09-10-03	EDL #	APP'D: M/H 09-10-03
UNLESS OTHERWISE SPECIFIED DIMENSIONS ARE IN INCHES TOLERANCES DECIMAL .XX± .XXX± FRACTIONS ± DO NOT SCALE THIS DRAWING	DRAWN BY: WD	SCALE: NONE	SHEET: E1 OF E4
	HIGH WIND ASSEMBLY FOR 5" MAST		
	DRAWING NUMBER: 9459001501		

Okonite® Armored Underground Signal Cables

With P.C.F. (Pull Cord Feature)

Heavy Duty Direct Burial Railroad Signal Cable

— AREMA Type I EPR Insulation — 600V

Multiple Copper Conductors/90°C Rating

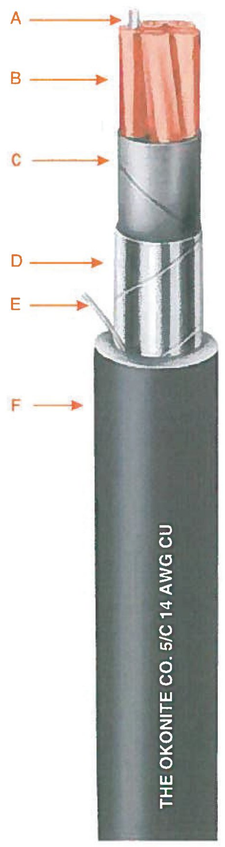

A Solid or stranded, Uncoated Copper Conductors
B Insulation—Okonite #14 AWG-#9 AWG 5/64", #6 - #2 AWG 6/64" with printed number code and tracer
C Cushion Tape Layer
D Flat Copper Alloy Armor Tape
E Pull Cord
F Jacket—Okolene with sequential footage markings

Insulation

Okonite EPR insulation is a heat, moisture and chemical resistant, mechanically rugged compound. The insulation thickness for size #14 AWG through #9 AWG is 5/64" and for #6 AWG through #2 AWG is 6/64". One conductor in each layer is identified as "Tracer". In addition, each conductor is number coded for ease of identification.

Assembly and Finish

Individual conductors are assembled with suitable fillers, where necessary, and a cable cushioning tape. A 7 mil flat copper alloy tape is then helically applied, giving outstanding mechanical protection. The black Okolene® (polyethylene) jacket is then applied overall.

Applications

Okonite Armored Underground Signal Cables are designed for use in all vital railroad signal circuits where security of service and long life are required in all vital circuit and safety related applications. These cables are recommended for use where crush resistance, termite and rodent protection are considerations and in all wet and dry locations.

Specifications

AREMA Signal Manual Part 10.3.17

Conductors: Solid uncoated copper per ASTM B-3, stranded uncoated compact round copper per ASTM B-496.

Insulation: Meets or exceeds electrical and physical requirements of ICEA S-95-658 (NEMA WC70) and AREMA Manual Part 10.3.19, thickness per table 10317-4.

Armor Tape: Copper alloy C19400 per ASTM B-465.

Jacket: Meets or exceeds electrical and physical requirements of ICEA S-95-658, Part 4.1.5.

Product Features

- Mechanically rugged.
- Resistant to aging.
- Easy to install and splice.
- Resistant to environmental hazards.
- Superior moisture resistance.
- Outstanding termite and rodent protection.
- Excellent electrical properties... high dielectric strength, low SIC and power factor and high insulation resistance.
- The Pull Cord feature affords easy and quick accessibility to conductors for splicing and terminating.
- Sequential footage markings on surface of outer jacket.

COMPOSITE CONSTRUCTIONS

Okonite Insulation: #14 AWG through #9 AWG 5/64", #6 AWG 6/64"

Catalog Number	Composite Make-Up	Conductors No. x Size (# Strands)	Conductors No. x Size (# Strands)	Outer Jacket Thickness 64th	Approx Cable O.D. (In.)	Approx Net Wt. Lbs./M'	Approx Ship Wt. Lbs./M
206-11-8974	7/C	2 x 9 (1X)	5 x 14 (1X)	5	0.99	523	574
▲ 206-11-8255	15/C	3 x 6 (1X)	12 x 14 (1X)	6	1.48	1711	1319
▲ 206-11-6283	19/C	6 x 6 (1X)	13 x 14 (1X)	6	1.69	1674	1877

▲ **Authorized Stock Item** - Available from Customer Service Centers.

Composite Cable Constructions are also available with stranded conductors. Consult your Okonite Representative.

Okonite Armored Underground Signal Cables

Okonite Insulation: #14 AWG Through #9 AWG, 5/64", #6 through #2 AWG, 6/64"

Catalog Number	Size AWG	No. of Strands (1)	No. Condrs.	Outer Jacket Thickness-64th	Approx. Cable O.D. Inches	Net Wt. Lbs./M'	Approx. Ship Wt. Lbs./M'
▲ 206-11-6882	14	Sol.	2	4	.65	208	241
206-11-6883	14	Sol.	3	4	.68	253	286
206-11-6884	14	Sol.	4	4	.74	300	338
▲ 206-11-6885	14	Sol.	5	4	.81	349	408
▲ 206-11-6887	14	Sol.	7	5	.91	451	510
206-11-6889	14	Sol.	9	5	1.05	579	671
206-11-6890	14	Sol.	10	5	1.12	698	790
▲ 206-11-6892	14	Sol.	12	5	1.17	700	792
206-11-6895	14	Sol.	15	6	1.33	871	994
206-11-6896	14	Sol.	16	6	1.33	906	1029
▲ 206-11-6899	14	Sol.	19	6	1.40	1028	1151
206-11-6901	14	Sol.	21	6	1.47	1127	1250
▲ 206-11-6907	14	Sol.	27	6	1.67	1388	1638
▲ 206-11-6910	14	Sol.	37	7	1.89	1834	2076
206-11-6692	12	Sol.	2	4	.68	240	273
206-11-6693	12	Sol.	3	4	.72	292	330
206-11-6694	12	Sol.	4	4	.78	354	392
206-11-6695	12	Sol.	5	4	.85	412	471
206-11-6697	12	Sol.	7	5	.96	535	594
206-11-6699	12	Sol.	9	5	1.11	689	781
206-11-6700	12	Sol.	10	5	1.19	774	866
206-11-6702	12	Sol.	12	5	1.24	847	952
206-11-6812	10	Sol.	2	4	.72	279	317
206-11-6813	10	Sol.	3	4	.76	346	384
206-11-6814	10	Sol.	4	4	.83	424	483
206-11-6815	10	Sol.	5	5	.94	518	577
206-11-6817	10	Sol.	7	5	1.02	654	746
206-11-6819	10	Sol.	9	5	1.18	842	934
206-11-6820	10	Sol.	10	6	1.30	973	1078
206-11-6822	10	Sol.	12	6	1.36	1076	1199
206-11-6922	9	Sol.	2	4	.75	317	350
▲ 206-11-6923	9	Sol.	3	4	.79	384	443
206-11-6924	9	Sol.	4	5	.90	495	554
▲ 206-11-6925	9	Sol.	5	5	.97	581	640
▲ 206-11-6927	9	Sol.	7	5	1.06	737	829
206-11-6928	9	Sol.	8	5	1.14	843	935
206-11-6929	9	Sol.	9	5	1.23	952	1057
▲ 206-11-6930	9	Sol.	10	6	1.35	1098	1221
206-11-6931	9	Sol.	12	6	1.42	1215	1338
▲ 206-11-6242	6	Sol.	2	5	.94	505	564
▲ 206-11-6243	6	Sol.	3	5	1.00	632	724
206-11-6244	6	Sol.	4	5	1.10	789	881
▲ 206-11-6245	6	Sol.	5	5	1.20	952	1044
▲ 206-11-6247	6	Sol.	7	6	1.34	1245	1368
206-11-6248	6	Sol.	8	6	1.45	1429	1552
206-11-6249	6	Sol.	9	6	1.56	1642	1820
▲ 206-11-6070	6	7	3	5	1.01	698	753
▲ 206-11-6042	4	7	2	5	1.02	619	674
▲ 206-11-6045	4	7	5	6	1.34	1266	1356
▲ 206-11-6130	2	7	3	6	1.28	1256	1346

Minimum Manufacturing Quantity is 1000 ft. Standard Package—1000' N.R. Reel.

▲ **Authorized Stock Item -** Available from Customer Service Centers.

(1) This construction is also available with stranded conductors. Consult your Okonite Representative.

E/14040701

Okonite® Armored Underground Signal Cables

With P.C.F. (Pull Cord Feature)

Heavy Duty Direct Burial Railroad Signal Cable

— AREMA Type I EPR Insulation — 600V

Multiple Copper Conductors/90°C Rating



A Solid or stranded, Uncoated Copper Conductors
B Insulation—Okonite #14 AWG-#9 AWG 5/64", #6 - #2 AWG 6/64" with printed number code and tracer
C Cushion Tape Layer
D Flat Copper Alloy Armor Tape
E Pull Cord
F Jacket—Okolene with sequential footage markings

Insulation

Okonite EPR insulation is a heat, moisture and chemical resistant, mechanically rugged compound. The insulation thickness for size #14 AWG through #9 AWG is 5/64" and for #6 AWG through #2 AWG is 6/64". One conductor in each layer is identified as "Tracer". In addition, each conductor is number coded for ease of identification.

Assembly and Finish

Individual conductors are assembled with suitable fillers, where necessary, and a cable cushioning tape. A 7 mil flat copper alloy tape is then helically applied, giving outstanding mechanical protection. The black Okolene® (polyethylene) jacket is then applied overall.

Applications

Okonite Armored Underground Signal Cables are designed for use in all vital railroad signal circuits where security of service and long life are required in all vital circuit and safety related applications. These cables are recommended for use where crush resistance, termite and rodent protection are considerations and in all wet and dry locations.

Specifications

AREMA Signal Manual Part 10.3.17

Conductors: Solid uncoated copper per ASTM B-3, stranded uncoated compact round copper per ASTM B-496.

Insulation: Meets or exceeds electrical and physical requirements of ICEA S-95-658 (NEMA WC70) and AREMA Manual Part 10.3.19, thickness per table 10317-4.

Armor Tape: Copper alloy C19400 per ASTM B-465.

Jacket: Meets or exceeds electrical and physical requirements of ICEA S-95-658, Part 4.1.5.

Product Features

- Mechanically rugged.
- Resistant to aging.
- Easy to install and splice.
- Resistant to environmental hazards.
- Superior moisture resistance.
- Outstanding termite and rodent protection.
- Excellent electrical properties... high dielectric strength, low SIC and power factor and high insulation resistance.
- The Pull Cord feature affords easy and quick accessibility to conductors for splicing and terminating.
- Sequential footage markings on surface of outer jacket.

COMPOSITE CONSTRUCTIONS

Okonite Insulation: #14 AWG through #9 AWG 5/64", #6 AWG 6/64"

Catalog Number	Composite Make-Up	Conductors No. x Size (# Strands)	Conductors No. x Size (# Strands)	Outer Jacket Thickness 64th	Approx Cable O.D. (In.)	Approx Net Wt. Lbs./M'	Approx Ship Wt. Lbs./M
206-11-8974	7/C	2 x 9 (1X)	5 x 14 (1X)	5	0.99	523	574
▲ 206-11-8255	15/C	3 x 6 (1X)	12 x 14 (1X)	6	1.48	1711	1319
▲ 206-11-6283	19/C	6 x 6 (1X)	13 x 14 (1X)	6	1.69	1674	1877

▲ **Authorized Stock Item** - Available from Customer Service Centers.

Composite Cable Constructions are also available with stranded conductors. Consult your Okonite Representative.

Okonite Armored Underground Signal Cables

Product Data
Section 7: Sheet 1

Okonite Insulation: #14 AWG Through #9 AWG, 5/64", #6 through #2 AWG, 6/64"

Catalog Number	Size AWG	No. of Strands (1)	No. Condrs.	Outer Jacket Thickness-64th	Approx. Cable O.D. Inches	Net Wt. Lbs./M'	Approx. Ship Wt. Lbs./M'
▲ 206-11-6882	14	Sol.	2	4	.65	208	241
206-11-6883	14	Sol.	3	4	.68	253	286
206-11-6884	14	Sol.	4	4	.74	300	338
▲ 206-11-6885	14	Sol.	5	4	.81	349	408
▲ 206-11-6887	14	Sol.	7	5	.91	451	510
206-11-6889	14	Sol.	9	5	1.05	579	671
206-11-6890	14	Sol.	10	5	1.12	698	790
▲ 206-11-6892	14	Sol.	12	5	1.17	700	792
206-11-6895	14	Sol.	15	6	1.33	871	994
206-11-6896	14	Sol.	16	6	1.33	906	1029
▲ 206-11-6899	14	Sol.	19	6	1.40	1028	1151
206-11-6901	14	Sol.	21	6	1.47	1127	1250
▲ 206-11-6907	14	Sol.	27	6	1.67	1388	1638
▲ 206-11-6910	14	Sol.	37	7	1.89	1834	2076
206-11-6692	12	Sol.	2	4	.68	240	273
206-11-6693	12	Sol.	3	4	.72	292	330
206-11-6694	12	Sol.	4	4	.78	354	392
206-11-6695	12	Sol.	5	4	.85	412	471
206-11-6697	12	Sol.	7	5	.96	535	594
206-11-6699	12	Sol.	9	5	1.11	689	781
206-11-6700	12	Sol.	10	5	1.19	774	866
206-11-6702	12	Sol.	12	5	1.24	847	952
206-11-6812	10	Sol.	2	4	.72	279	317
206-11-6813	10	Sol.	3	4	.76	346	384
206-11-6814	10	Sol.	4	4	.83	424	483
206-11-6815	10	Sol.	5	5	.94	518	577
206-11-6817	10	Sol.	7	5	1.02	654	746
206-11-6819	10	Sol.	9	5	1.18	842	934
206-11-6820	10	Sol.	10	6	1.30	973	1078
206-11-6822	10	Sol.	12	6	1.36	1076	1199
206-11-6922	9	Sol.	2	4	.75	317	350
▲ 206-11-6923	9	Sol.	3	4	.79	384	443
206-11-6924	9	Sol.	4	5	.90	495	554
▲ 206-11-6925	9	Sol.	5	5	.97	581	640
▲ 206-11-6927	9	Sol.	7	5	1.06	737	829
206-11-6928	9	Sol.	8	5	1.14	843	935
206-11-6929	9	Sol.	9	5	1.23	952	1057
▲ 206-11-6930	9	Sol.	10	6	1.35	1098	1221
206-11-6931	9	Sol.	12	6	1.42	1215	1338
▲ 206-11-6242	6	Sol.	2	5	.94	505	564
▲ 206-11-6243	6	Sol.	3	5	1.00	632	724
206-11-6244	6	Sol.	4	5	1.10	789	881
▲ 206-11-6245	6	Sol.	5	5	1.20	952	1044
▲ 206-11-6247	6	Sol.	7	6	1.34	1245	1368
206-11-6248	6	Sol.	8	6	1.45	1429	1552
206-11-6249	6	Sol.	9	6	1.56	1642	1820
▲ 206-11-6070	6	7	3	5	1.01	698	753
▲ 206-11-6042	4	7	2	5	1.02	619	674
▲ 206-11-6045	4	7	5	6	1.34	1266	1356
▲ 206-11-6130	2	7	3	6	1.28	1256	1346

Minimum Manufacturing Quantity is 1000 ft. Standard Package—1000' N.R. Reel.

▲ **Authorized Stock Item -** Available from Customer Service Centers.

(1) This construction is also available with stranded conductors. Consult your Okonite Representative.

E/14040701

THE OKONITE COMPANY
Ramsey, New Jersey 07446

GE Part #: 1094-02

Okonite®-Okolene® Duplex Track Wire

600V

One Copper Conductor/90°C Rating



A Bare Copper Conductor- Size #9 AWG, #6 AWG Solid
B Insulation - Okonite-Sizes #9 AWG and #8 AWG-5/64", #6 AWG-6/64"
C Jacket-Okolene, Color Coded; 1-Black, 1-Red

Insulation

Okonite EPR is Okonite's trade name for its heat resistant, mechanically rugged ethylene-propylene based insulating compound. The insulation thickness for wire sizes #9 AWG and #8 AWG is 5/64" and for #6 AWG is 6/64".

Jackets and Finishes

The Okolene (PE) jacket supplied with this cable provides excellent resistance to mechanical abuse, weathering and most acids, oils and alkalies. Color Coded; 1-Black, 1-Red.

Applications

Okonite-Okolene 600V Duplex Track Wire is recommended for use in track circuits, signal operations, car retarder and switch machine applications. Can be installed in either wet or dry locations, in conduit trays or trough or buried direct.

Specifications

Conductor: Bare copper- size #9 AWG to #6 AWG solid per ASTM B-3, #6 AWG.
Insulation: Per ICEA S-95-658, and AREMA Signal Manual Part 10.3.19.
Jacket: Meets or exceeds the physical and electrical requirements of ICEA S-95-658, and AREMA Signal Manual Part 10.3.21

Product Features

- Exceptional heat resistance.
- 90°C Continuous Rating
  130°C Emergency Overload Rating.
  250°C Short Circuit Rating.
- Mechanically rugged.
- Flexible, easy to handle and splice.
- Resistant to most oils, acids, alkalies and effects of weather.
- Stable electrical and physical properties.
- Excellent moisture resistance.

Okonite Insulation: #9 AWG, 5/64", #6 AWG, 6/64"

Catalog Number	Size AWG	No. of Strands	Jacket Thickness 64 th's	Approx. Duplexed O.D. (In.)	Approx. Net Wt. Lbs./M'	Approx. Ship Wt. Lbs./M'
150-12-3931	9	Solid	4	0.83"	199	243
▲ 150-12-3933	6	Solid	4	1.00"	329	404

▲ Authorized Stock Item: Available from our Customer Service Center
Standard Package -1000' Non-Returnable Reel

THE OKONITE COMPANY
Ramsey, New Jersey 07446

Cable Clips

Retainer Clips

Design Features

- Spring steel and "snap-on" designs mean no more holes to drill.
- Flexibility - wide range of clips fit all standard rails and a variety of conductors.
- Versatility - ERICO now enables you to secure cables — reducing maintenance and improving wayside safety.

Electroplated Spring Steel

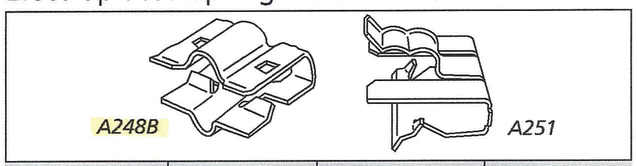

A248B *A251*

Part Number	Max Cable Diameter	Position on Rail Base	Standard Packaging
A248B	3/8"	Perpendicular	50
A251	3/8"	Double Parallel	50

Electroplated Steel

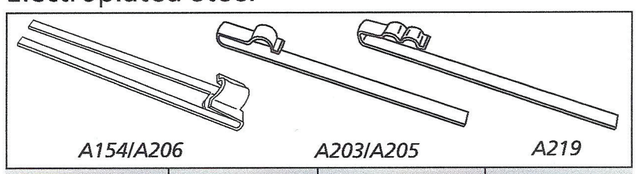

A154/A206 *A203/A205* *A219*

Part Number	Max Cable Diameter	Position on Rail Base	Standard Packaging
A154	5/16"	Perpendicular	50
A203	5/16"	Parallel	100
A205	1/2"	Parallel	100
SBA206	1/2"	Perpendicular	50
A219	5/16"	Double Parallel	100

PVC Cable Keeper

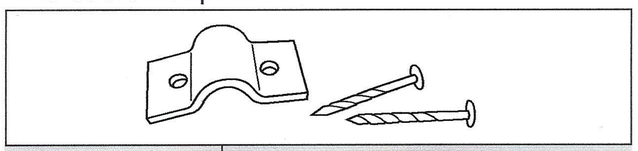

Part Number	Description
T375	7/16" Diameter Cable Keeper – 2 Holes w/nails

Typical Applications

Track Clips

Track Retainer Clip

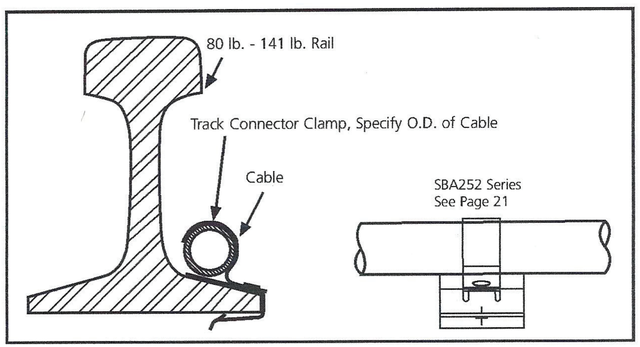

Rail Clip and Concrete Tie Clip (Contact ERICO)

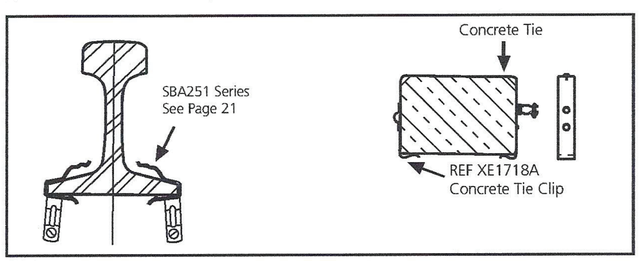

Clip, Bootleg, Track Connector

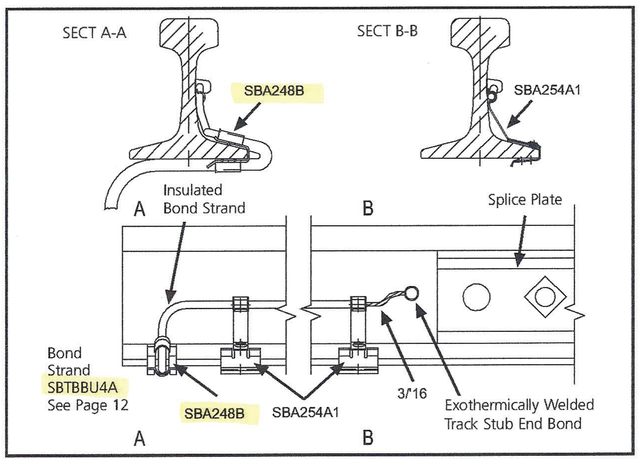

Typical Applications

Concrete Tie Clips

Concrete Tie Clip Bootleg Riser 4-Wire Kit

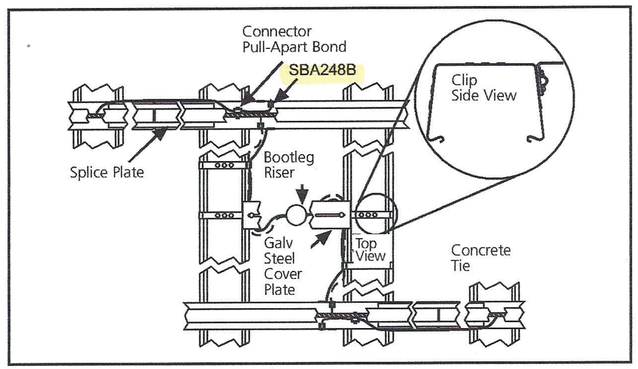

Concrete Tie Clip Applications

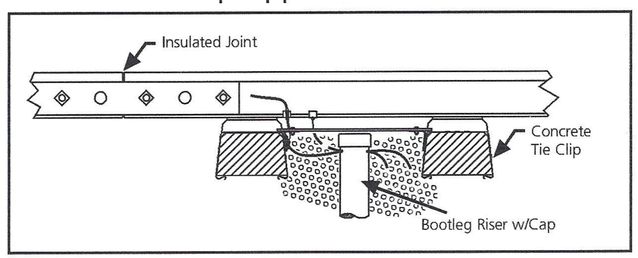

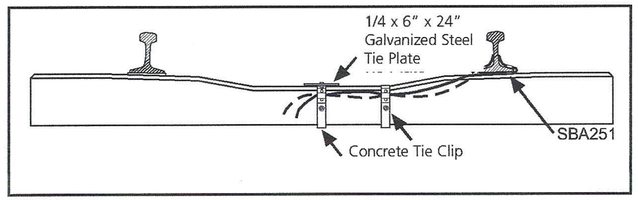

Copper-Bonded Ground Rods

Pointed Rods

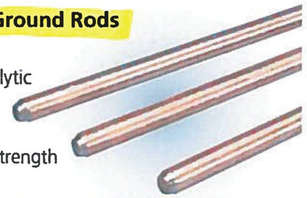

- 99.9% pure electrolytic copper coating
- Molecular bond to nickel-sealed high strength steel core
- Tensile strength greater than 80,000 PSI on 1/2" & 90,000 PSI on 5/8" and 3/4"
- Minimum copper coating of 10 mils on rods listed to UL® 467
- Legibly marked with manufacturer's ID and catalog designation
- Manufactured to exceed the requirements of ANSI®/NEMA® GR1

Part No.	Nominal Diameter (in)	Length (ft)	Plating Thickness (mils)	Weight per 100 rods (lbs)	Standard Bundle
613840**	3/8	4	10	135	5
613880**	3/8	8	10	270	5
611380	1/2	8	10	553	5
615880	5/8	8	10	680	5
615883	5/8	8	13*	680	5
613480	3/4	8	10	1,000	5
613483	3/4	8	13*	1,000	5
611300	1/2	10	10	738	5
615800	5/8	10	10	844	5
615803	5/8	10	13*	844	5
613400	3/4	10	10	1,240	5
614400	1	10	10	2,204	5
615812	5/8	12	10	1,000	5
613412	3/4	12	10	1,480	5
615815	5/8	15	10	1,275	5
613415	3/4	15	10	1,850	5

* 13 mils of copper meet specifications of RUS.
** Non-UL listed rods.
† Additional lengths available.

Threadless Compression Couplers for Copper-Bonded Pointed Rods



- Made of high-strength silicon bronze
- Tapered so when rod is driven into coupling, parts compress to form a conductive connection
- UL & CSA® Listed



Part No.	Nominal Rod Diameter (in)	Unit Weight (lbs)	Unit Weight (kg)	Standard Package
CC12F	1/2 (full)	0.240	0.108	25
CC58	5/8	0.300	0.134	25
CC34	3/4	0.450	0.202	25

Steel Driving Sleeves for Pointed Rods*



- Slides on top of ground rod to prevent mushrooming while driving into ground

Part No.	Ground Rod Size (Unthreaded)	Standard Package
B13714	1/2" Copper-Bonded or Steel rod	1
B13716	5/8" Copper-Bonded rod (.563" diameter)	1
B13731	5/8" Steel rod (.625" diameter)	1
B13718	3/4" Copper-Bonded rod (.682" diameter)	1
B13733	3/4" Steel rod (.750" diameter)	1
B13722	1" Copper-Bonded rod (.914" diameter)	1
B13737	1" Steel rod (1.00" diameter)	1

*For unthreaded ground rods only.

Economical Sleeves for 5/8" Copper-Bonded, Pointed Rods

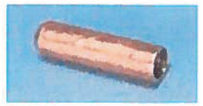

Part No.	Ground Rod Size	Standard Package
ED558	5/8" Copper-Bonded Rods (.563" diameter)	1

Driving Heads For Copper-Bonded Pointed Rods



- For use in power assisted ground rod drivers

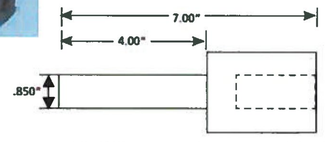

Part No.	Ground Rod Size	Standard Package
DH58	5/8" Copper-Bonded Rods (.563" diameter)	1
DH34	3/4" Copper-Bonded Rods (.682" diameter)	1

Associated Material

Sleeves - Compression Type

Standard Package 100

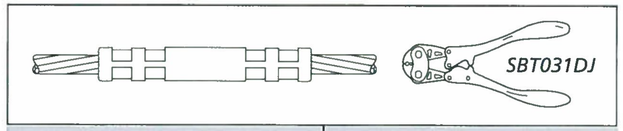

Part Number	3/16" Bond Strand To: Description
A2314J	#9 solid or #10 str
A2364J	#8 solid or #9 str
A2363J	#6 solid or #8 str
A2367J	#3/16" or #6 str
A2412J	1/4" Binding Post, Lug
SBT031DJ	Compression Tool

No-Oxide Grease

Part Number	Description
T369	1 ounce tube

Bond Removal Punch

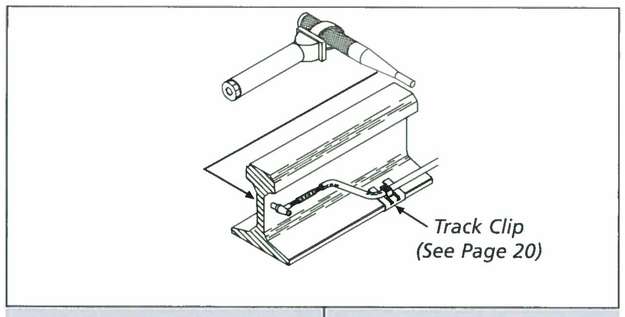

Part Number	Description
SBT382B	Punch Only
SBT408	Plastic Handle Only
SBT382BWH	Punch w/Handle
SBT382BWPH	Punch w/Plastic Handle

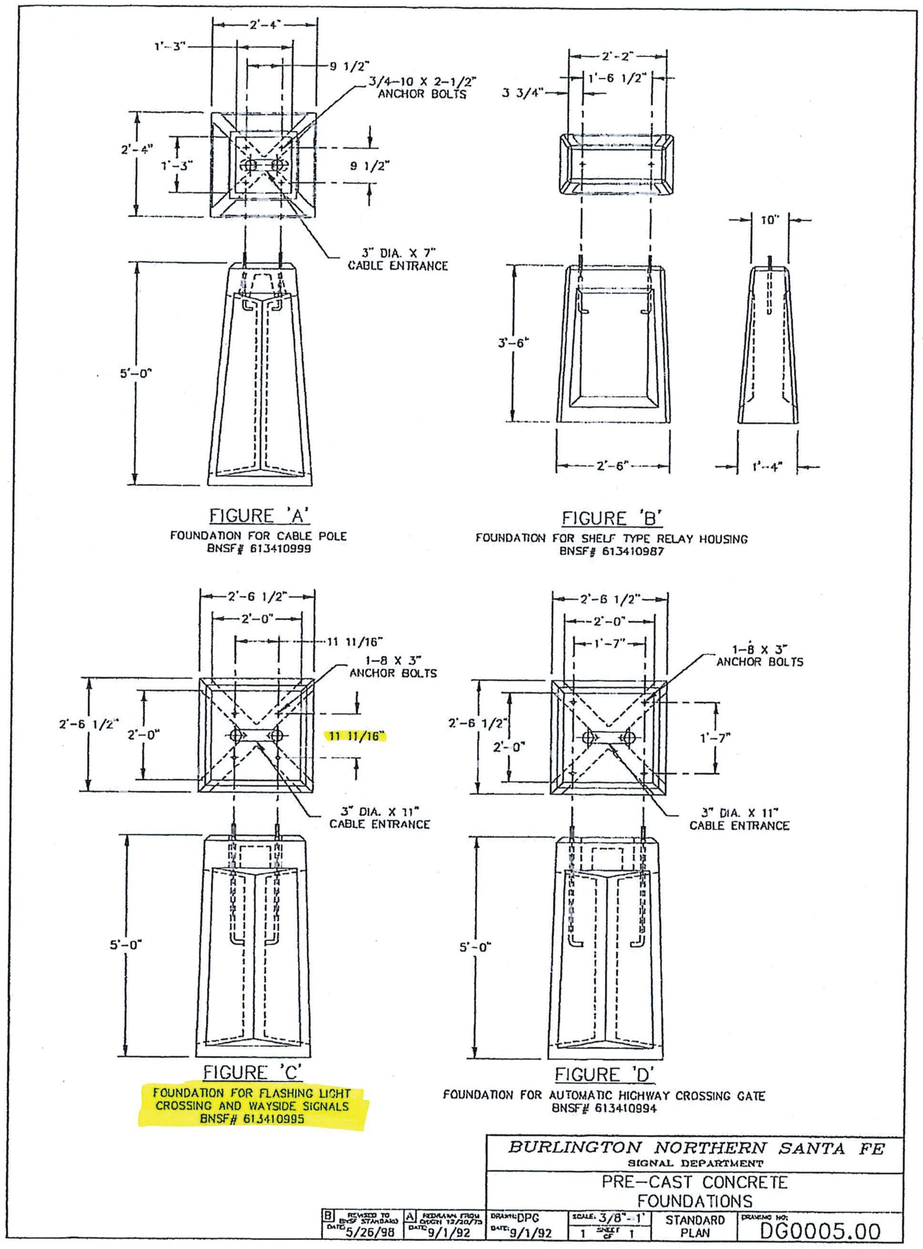

FIGURE 'A'
FOUNDATION FOR CABLE POLE
BNSF# 613410999

FIGURE 'B'
FOUNDATION FOR SHELF TYPE RELAY HOUSING
BNSF# 613410987

FIGURE 'C'
FOUNDATION FOR FLASHING LIGHT CROSSING AND WAYSIDE SIGNALS
BNSF# 613410995

FIGURE 'D'
FOUNDATION FOR AUTOMATIC HIGHWAY CROSSING GATE
BNSF# 613410994

BURLINGTON NORTHERN SANTA FE
SIGNAL DEPARTMENT

PRE-CAST CONCRETE FOUNDATIONS

B REVISED TO BNSF STANDARD DATE 5/26/98	A REDRAWN FROM CHGN 12/20/73 DATE 9/1/92	DRAWN: DPG DATE: 9/1/92	SCALE: 3/8"=1' SHEET 1 OF 1	STANDARD PLAN	DRAWING NO: DG0005.00

1322-01
Gate Foundation

Bare Copper, Solid and Stranded



Applications
Solid (medium-hard or hard-drawn temper) for use in overhead, outdoor applications for distribution circuits.
Stranded (hard-, medium-hard or soft-drawn temper) for grounding.

Specifications
- SOLID: ASTM B-1=Hard-drawn temper; ASTM B-2=Medium-hard-drawn temper; ASTM B-3=Soft-drawn temper
- STRANDED: ASTM B-8=Concentric lay, Class B or Class C

SOLID
All part numbers are for soft-drawn temper. For other tempers use the suffix "H" for hard-drawn or "M" for medium-hard-drawn temper, (e.g. 1A-0801H). Diameters and weights may vary among manufacturers.

Part No.	Conductor Size AWG	No. of Strands	Nom. O.D. (in.)	Approx. Wt. lb./1,000 ft.
1A-2601	26	Solid	0.016	0.8
1A-2401	24	Solid	0.020	1.2
1A-2201	22	Solid	0.025	1.9
1A-2001	20	Solid	0.032	3.1
1A-1801	18	Solid	0.040	4.9
1A-1601	16	Solid	0.051	7.8
1A-1401	14	Solid	0.064	12.4
1A-1201	12	Solid	0.081	19.8
1A-1001	10	Solid	0.102	31.4
1A-0801	8	Solid	0.129	50.0
1A-0601	6	Solid	0.162	79.4
1A-0401	4	Solid	0.204	126.3
1A-0201	2	Solid	0.258	201.9

Anixter is a leading global supplier of communications and security products, electrical and electronic wire and cable, fasteners and other small components. We help our customers specify solutions and make informed purchasing decisions around technology, applications and relevant standards. Throughout the world, we provide innovative supply chain management solutions to reduce our customers' total cost of production and implementation.

Anixter does not manufacture the items described in this publication. Any applicable product warranties are provided by the manufacturers. To the fullest extent permitted by law, Anixter disclaims all warranties, either express or implied. The information provided and any images shown are for descriptive purposes only. Anixter makes no warranty or representation, express or implied, about the accuracy or completeness of any information provided. Data and suggestions made in the publication are not to be construed as recommendations to purchase or as authorizations to use any products in violation of any law or regulation. All products are sold subject to Anixter's General Conditions of Sale.

NO-OX-ID Metal Corrosion Protection

Stop rust and block corrosion with NO-OX-ID rust proofing products. These rust preventatives form a barrier coating to insure corrosion protection in severe corrosive and marine environments. Our NO-OX-ID anti corrosion coatings contain Sanchem's active corrosion inhibitor system that will prevent rust with just one coating application. NO-OX-ID is not a paint, it is a rust preventative metal treatment that can work in highly corrosive, high humidity and high salt environments where paints repeatedly fail. All NO-OX-ID products are RoHS compliant and Sanchem is ISO-9001.

Product Features:

These non-toxic high performance rust preventatives require only minimal surface preparation, has a clean environmentally friendly MSDS and does not require curing or drying time. These user friendly rust preventative coatings can be applied in any climate. NO-OX-ID products have been protecting pipes and valves against rust and corrosion for years in the most severe of environments such as ocean tidal areas, lock & dams, salt plants, chemical manufacturing plants, pineapple processing plant and sewage treatment plants.

NO-OX-ID can even be applied to a wet surface. To demonstrate this to yourself, in a small container of water, submerge a small piece of clean metal. Dip the other hand in NO-OX-ID A-Special and rub it on the metal while under water. Notice the excellent bond of the NO-OX-ID to the metal!

CADWELD® BONDING PRODUCTS

BONDS



Joint Head Bonds

Order in boxes of 100 - Includes one pair of replacement molds, flint ignitor and necessary weld me

Bond	6 1/2"	7"	7 1/2"	9 3/4"	9 3/4"
3/16" Dia.					
XS Style	SBS24882		SBS24883	SBS24884	
Head Free Rail	SB20112		SB20128	SB20116	
Tab Style	SB20104		SB20136	SB20108	
5/16" Dia.					
Tab Style		SB20175			SB20118
Head Free Rail		SB20175HF			
Price Each	**2.70**	**3.90**	**2.91**	**3.12**	**4.71**

2161-01

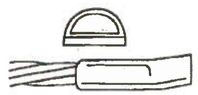

Tab Style

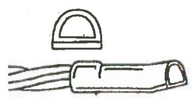

XS Style

For complete Welders (T-6 & T-7 style) see page 7.

CADWELD rail head joint bonds provide:

- Maximum broken rail protection
- Maximum corrosion resistance
- Simple and highly portable installation equipment
- Maximum protection against physical damage
- 7 to 1 shear strength over a pin head bond
- Unchanging electrical resistance
- Minimum installer skill required
- Equally usable on old, worn, or new rail
- Not destroyed by rail end build up

Track Connectors - Web

Orders in boxes of 100 - Includes one pair of replacement molds, flint ignitor and necessary weld metal.

Part No.	Description	Price Each
SBTBBU4A	3/16" Dia. x 1" Tab x 4" Long Bootleg	3.08
SBTBCU412	3/16" Dia. x 1" Tab x 12" Long Bootleg	3.16

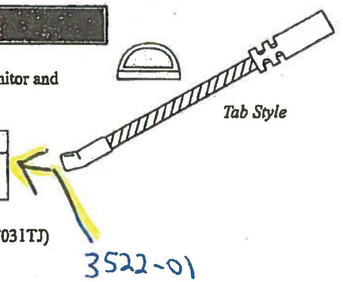

Tab Style

3522-01

For complete Welder (SBTBT21C) see page 8 and compression tool (SBT031TJ) see page 12.

The ERICO CADWELD Track Connector is used when the advantages of a welded connection to the rail web are desired and standard compression connection to track wire is required. The connector provides flexibility and resistance to vibration fatigue by incorporating a length of bond strand between the CADWELD connection and the sleeved end. The SBTBBU4A and SBTBCU412 are 3/16" tinned copper alloy. (Other lengths available)

34600 Solon Road • Solon, OH 44139 United States
(800) 447-7245 • Fax (800) 309-8961
RT2A68 10/1/98

ERITECH®

- Features a single-use ceramic mold which eliminates the need for a mold and frame and / or handle clamps.
- Produces a permanent connection that will not loosen or corrode.
- Fits copper-bonded (threaded and plain), galvanized and stainless steel ground rods.
- Simple to use.
- NEC® compliant
- cULus® Listed
- Rural Utilities Service (RUS) accepted

CADWELD® ONE SHOT

For Connections to Ground Rods

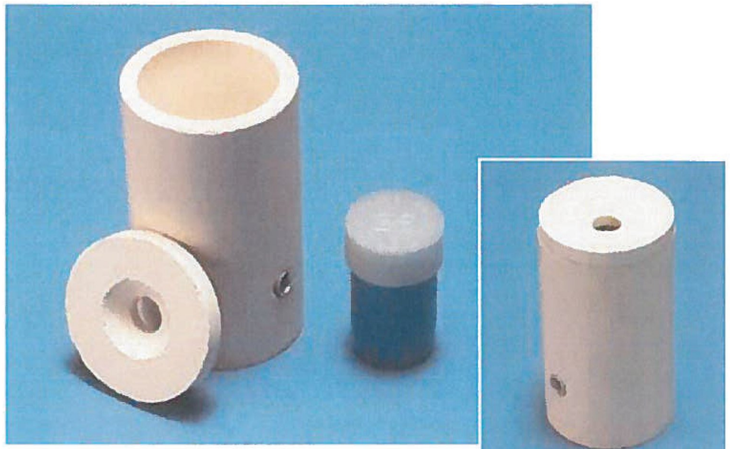

The CADWELD® ONE SHOT produces a permanent exothermically welded connection to a ground rod that will not loosen, corrode away, or increase in resistance for the life of the installation.

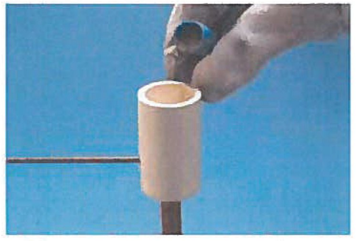

Position CADWELD ONE SHOT and wire on prepared ground rod. Dump the welding material into the ceramic crucible.

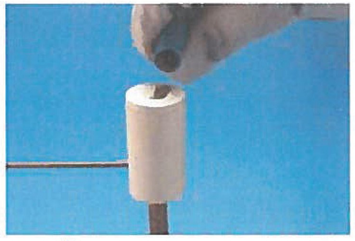

Set the lid on the CADWELD ONE SHOT body and add the starting material.

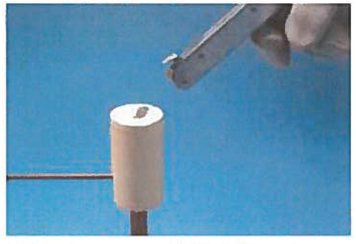

Initiate the reaction with T320 flint ignitor

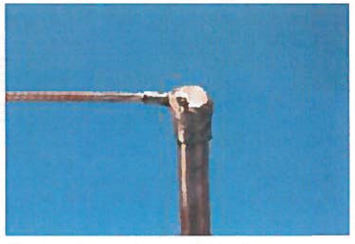

The reaction produces a finished permanent exothermic connection

ERICO®

ERITECH

CADWELD® ONE SHOT

For Connections to Ground Rods

Ordering Information

Ground Rod	Concentric Conductor Solid	Concentric Conductor Stranded	Metric Cable Conductor Square mm	CADWELD ONE SHOT Part Number Type GR	Type GT	Type NT	Type NX
1/2" (12.7 mm)	6, 8 3, 4 1, 2	8 4, 6 2, 3	8-10 14-22 30-38	GR1141G GR1141L GR1141V	GT1141G GT1141L GT1141V	NT1141G NT1141L NT1141V	NX1141G NX1141L
5/8" (14.2 mm)	6, 8 3, 4 1, 2 2/0, 1/0	8 4, 6 2, 3 1/0, 1 2/0 4/0	8-10 14-22 30-38 50-60 70	GR1161G GR1161L GR1161V GR1162C GR1162G GR1162Q	GT1161G GT1161L GT1161V GT1162C GT1162G	NT1161G NT1161L NT1161V	NX1161G NX1161L NX1161V
3/4" (17.2 mm)	6, 8 3, 4 1, 2 2/0, 1/0	8 4, 6 2, 3 1/0, 1 2/0 4/0	8-10 14-22 30-38 50-60 70	GR1181G GR1181L GR1181V GR1182C GR1182G GR1182Q	GT1181G GT1181L GT1181V GT1182C GT1182G	NT1181G NT1181L NT1181V	NX1181G NX1181L NX1181V
	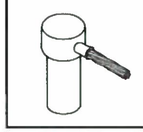	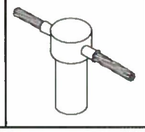	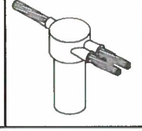	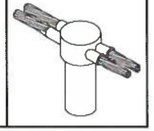			

Note: T320 flint ignitor sold separately.

NEC is a registered trademark of, and National Electric Code (NEC) standard is a copyright of the National Fire Protection Association.
cULus is a registered trademark of the Underwriters Laboratories, Inc.

WARNING – ERICO products shall be installed and used only as indicated in ERICO's product instruction sheets and training materials. Instruction sheets are available at www.erico.com and from your ERICO customer service representative. Improper installation, misuse, misapplication or other failure to completely follow ERICO's instructions and warnings may cause product malfunction, property damage, serious bodily injury and death.

Copyright ©2007 ERICO International Corporation. All rights reserved.
CADDY, CADWELD, CRITEC, ERICO, ERIFLEX, ERITECH, and LENTON are registered trademarks of ERICO International Corporation.

CADWELD® Bonding Products

Bonds

Track Connectors - Web

Order in boxes of 100 - Includes one pair of replacement molds, flint ignitor and necessary F80 formulation welding material.

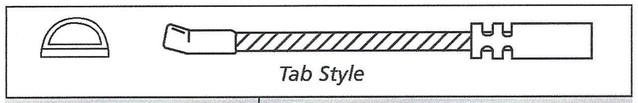

Tab Style

Part Number	Description
SBTBBU4A	3/16" Dia. x 1" Tab x 4" Long Bootleg
SBTBCU412	3/16" Dia. x 1" Tab x 12" Long Bootleg

For complete Welder (SBTBT21C) see page 13 and compression tool (SBT031DJ) see page 16.

The CADWELD® track connector from ERICO is used when the advantages of a welded connection to the rail web are desired and standard compression connection to track wire is required. The connector provides flexibility and resistance to vibration fatigue by incorporating a length of bond strand between the CADWELD connection and the sleeved end. The SBTBBU4A and SBTBCU412 are 3/16" tinned copper alloy. (Other lengths available.)

Jumper, Switch and Bootleg Bonds

Substitute desired length of bond in even inches for 'X'. Replacement molds sold separately. All CADWELD bonds are furnished with the necessary F80 formulation welding material.

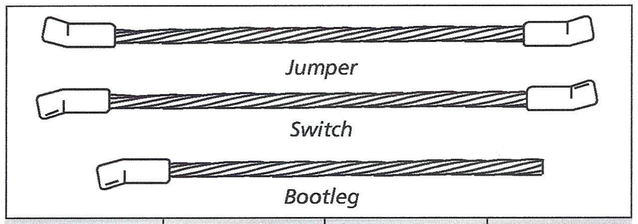

Jumper

Switch

Bootleg

Diameter	Jumper	Switch	Bootleg
3/16" Dia.			
3/4" XS Style	SBXSJ33"X"	SBXSS33"X"	SBXSB33"X"
3/4" Tab	SBTBJ33"X"	SBTBS33"X"	SBTBB33"X"
1" Tab	SBTBJ34"X"	SBTBS34"X"	SBTBB34"X"
1-1/2" Tab	SBTBJ36"X"	SBTBS36"X"	SBTBB36"X"
5/16" Dia.			
1" Tab	SBTBJ54"X"	SBTBS54"X"	SBTBB54"X"

Also available as bond only.
STD Packs of 10 or 25

building a smarter, unified business foundation

WORLDWIDE [CHANGE] EN

PANDUIT SOLUTIONS PRODUCTS AND SERVICES SUPPORT ABOUT US

Back to Result



PLT2S-M

Add to BOM | Add to Favorites

Cable Tie, 7.4", Standard cross section

Product Details Related Documents

Std. Pkg. Qty.	1000
Std. Pallet Volume (cf)	53.046174
Std. Pallet Weight (lb)	747.8400
Std. Ctn. Volume (cf)	2.2103
Std. Ctn. Weight (lb)	31.1600
RoHS Compliancy Status	Compliant
Part Description	Cable Tie, 7.4", Standard cross section
Product Type	Cable Ties
Material	Nylon 6.6
Color	Natural
Mil. Std. Part Number	MS3367-1-9
CSA Certified	Yes
UL Listed (File #E56854)	Yes
UL Recognized (File #E56854)	Yes
Width (In.)	0.190

Width (mm)	4.8
Length (mm)	188
Length (In.)	7.4
Max. Continuous Use Temperature	185°F (85°C)
CE Compliant	Yes
Locking Style	Locking
Pricing Description	Cable Tie, 7.4"L (188mm), Standard, Nylon, Natural
Tool	GTS, GTSL, GS2B, GTH, GS4H, PTS, PTH, PPTS, STS2, STH2
Thickness (mm)	1.3
Thickness (In.)	0.052
Plenum-Rated	Yes, for use in plenum or air handling spaces per NEC Sec. 300.22 (C) and (D)
Min. Loop Tensile Strength (Lbs.)	50
Min. Bundle Diameter (mm)	1.5
Min. Bundle Diameter (In.)	0.06
Max. Bundle Diameter (mm)	48
Max. Bundle Diameter (In.)	1.88
Cross Section	Standard
Min. Loop Tensile Strength (N)	222
Min. Order Qty.	1,000.0000

Mechanical Connectors

Related Materials

Bond Strand

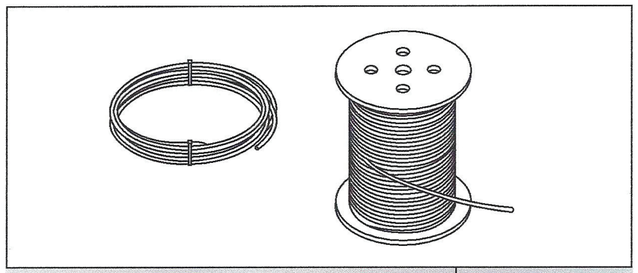

Part Number			Description
100' Coil	500' Reel	1000' Reel	
SBS8CINSUL	SBS8LINSUL	SBS8INSUL	S-8, 3/16", Black 4/64 PVC
SBS8CINORG	SBS8LINSORG	SBS8INORG	S-8, 3/16", Orange 4/64 PVC
SBS8TCINS	SBS8TDINSUL	SBS8TINSUL	S-8, 3/16" Tinned, Black 4/64 PVC
SBS8TCINS664	SBS8TLINS664		S-8, 3/16" Tinned, Black 6/64 PVC
SBS8TCINSRD		SBS8TINSRD	S-8, 3/16" Tinned, Red 6/64 PVC
SBS8CBARE SBS17CBARE	SBS8LBARE	SBS8BARE	S-8, 3/16", Bare S-17, 5/16", Bare
A806A12F100		A806A12F1000	S-8, 3/16" Tinned, Orange 6/64 PVC

Miscellaneous Bonding Items

Part Number	Description	Std. Pkg.
B154A	3/8" Straight head plug terminal	25
B101AA	Lug - 1/16" x 1/2", 1-hole (1/4" stud)	25
SBK012A	1/4" split stud kit	10
SBK012B	1/4" split stud kit	100
SB25	Rail Welding Material F80	50
SB32	Rail Welding Material F80	50

KEY
EPR–ETHYLENE PROPYLENE RUBBER
PE–POLYETHYLENE

RATINGS
90C – CONTINUOUS
130C – EMERGENCY
250C – SHORT CIRCUIT
600 VOLTS, CONTINUOUS

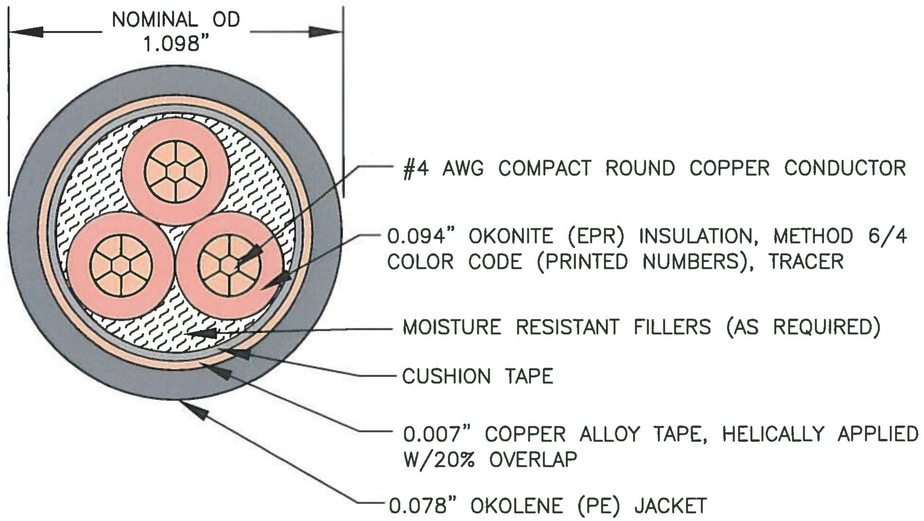

CABLE WEIGHT = 0.801 LBS/FT

G.E.T.S
OKONITE FO# 07–9175
OKONITE PC# 206–11–6373
CUSTOMER PO# 183–9029

3/C #4 AWG C/RD CU, OKONITE, CUSHION TAPE, COPPER ALLOY TAPE, OKOLENE 600V

THE OKONITE COMPANY RAMSEY, N.J. U.S.A.	DATE 1/9/12	SCALE NTS	REVISIONS
	DR. NV	APP. JZJR	DRAWING NUMBER
	DIR NBA	EST. NUMBER 35803	CS–18294

Part # 005712-012

Rail Jumper Bond Kit, Signal, Tab Style – SBTBJ5448

- Provides unchanging electrical resistance
- Superior corrosion resistance
- Easy installation, with minimum installer training required
- Simple and highly-portable installation equipment
- Equally usable on old, worn, or new rails
- Highly durable

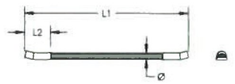

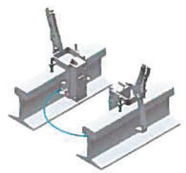

Part Number	SBTBJ5448
Material	Cadmium Bronze Copper
Finish	Bare Tinned
Bond Terminal Style	Tab
Conductor Size	5/16" Bondstrand
Length 1 (L1)	48"
Length 2 (L2)	1"
Diameter (Ø)	5/16"
Standard Packaging Quantity	25 pc
UPC	78285676080

Kits include: (25) bonds and (50) F80 alloy welding material.

WARNING
Pentair products shall be installed and used only as indicated in Pentair's product instruction sheets and training materials. Instruction sheets are available at erico.pentair.com and from your Pentair customer service representative. Improper installation, misuse, misapplication or other failure to completely follow Pentair's instructions and warnings may cause product malfunction, property damage, serious bodily injury and death and/or void your warranty.

© 2016 Pentair. All rights reserved.
Pentair, CADDY, CADWELD, CRITEC, ERICO, ERIFLEX, ERITECH and LENTON are owned by Pentair or its global affiliates.
All other trademarks are the property of their respective owners. Pentair reserves the right to change specifications without prior notice.

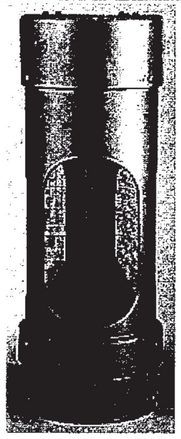

Model EB-3-360-5 - notable features:

The General Signals' electronic crossing bell is a totally electric device which has no moving parts that may result in mechanical failure due to weather, pests, or fatigue.

The sound of a mechanical bell has been permanently recorded on a micro-chip and is then played back through an outdoor speaker utilizing 16-bit sound technology. The sound of the electronic bell cannot be distinguished from that of an actual mechanical bell No special wiring is required; the unit is connected to the same wire leads that would be used for a mechanical bell.

The cylindrical plastic housing measures 6" dia. and 18" high and is durable, weatherable and lightweight (less than 10 pounds). This allows the unit to be easily installed by one man and it is virtually maintenance free.

The electronic circuit draws less than 0.15 amps, which is approximately 10% of the current draw of a typical mechanical bell.

The bell meets all applicable AAR recommendations, and pertinent
specifications are as follows:

- 250 strokes per minute
- Has sound reading range of 85 to 95 decibels in a 180° plane
- Operating voltage of 7.5 to 17.5 volts DC
- Mounts directly to a 4 or 5 inch mast
- 16 bit sound technology

Electronic Bells are also available in a louder version as well as a 3 level volume model.

BILL OF MATERIAL

WGT.	ITEM	DESCRIPTION	QTY. PER (1) ASS'Y	CUTTING QTY.	MP-CODES	PART NUMBER	DWG. NUMBER
41	1	1/4" H.R.S. PLATE 22" X 26"	1		P VP		

TOTAL WT. = 41 LBS

NOTE: DOMESTIC CERTIFICATION REQUIRED ON MATERIAL.

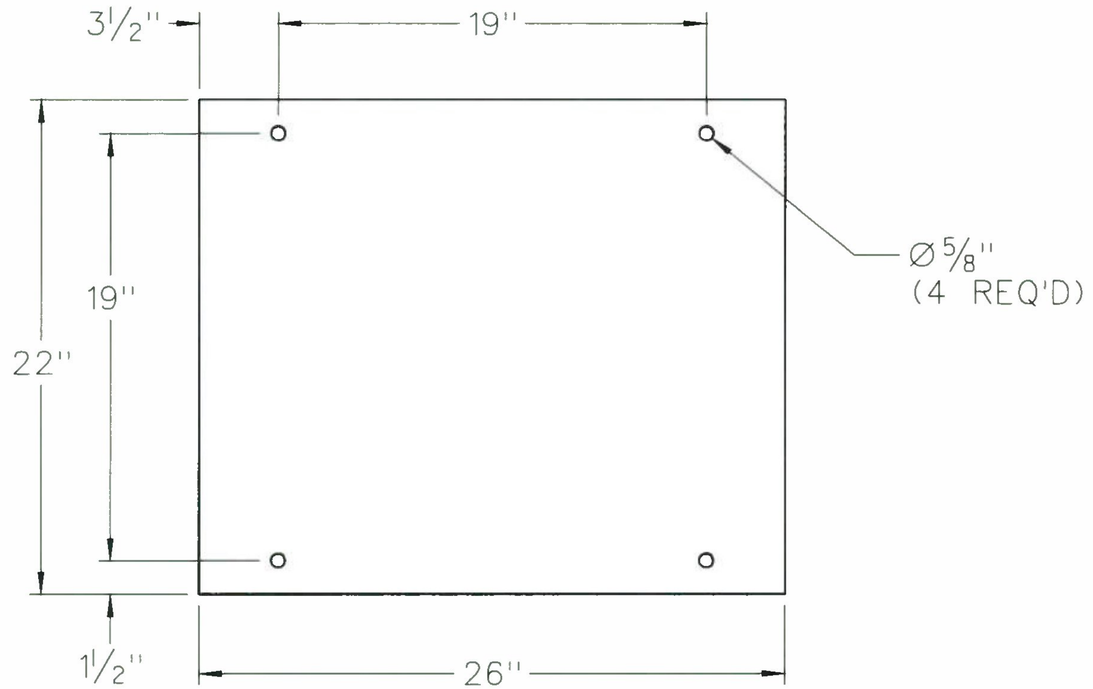

REV.	DATE	BY	DESCRIPTION
01	06/19/02	T.H.	22" WAS 24", 19" WAS 21", 3½" WAS 2½" & ⅝" WAS ⅞" (ECR #02-082)
02	12/30/11	RM	ADDED NOTE PER D.C.

BUILD PER LATEST REVISION OF
FMC'S WORKMANSHIP STANDARDS
UNLESS OTHERWISE NOTED

S.O. _____

QTY. _____

FINISH: HOT DIP GALV.

TOLERANCES:
UNLESS OTHERWISE SPECIFIED

FRACTIONAL	± 1/16"
2 PLACE DEC.	± .03
3 PLACE DEC.	± .005
ANGULAR	± 1°

FABRICATED METALS LLC
MANUFACTURER OF RAILROAD AND INDUSTRIAL METAL PRODUCTS SINCE 1955

DESCRIPTION: SHUNT PLATE

DRAWN BY:	E. ANDERSON
APPROVED:	
SCALE:	1½"=1'-0"
ECN:	12/30/11
DATE:	4/29/9[illegible]

PART NO. .RSHUNTPL

DWG. NO. A-4829-02

KRPA Series Panel Plug-in Relay

- 5 to 10A current capability
- Contact arrangements of 1, 2 and 3 form C (CO)
- Octal type termination for quick installation
- Indicator lamp available on certain models





Typical applications
Baggage handling, lighting, inspection equipment, marine.

Approvals

UL E22575; CSA LR15734
Technical data of approved types on request

Contact Data

Contact arrangement	1 form C (CO), 2 form C (DO), 3 form C (TO)	
Rated voltage	240VAC	
Rated current	10A	
Contact material	Ag	AgCdO
Min. recommended contact load	100mA, 12VDC	300mA, 12VDC
Frequency of operation	360 ops./hour	360 ops./hour

Contact ratings

Type	Load	Cycles
UL 508		
KRPA, Ag		
	5A, 120VAC	$100x10^3$
	3A, 240VAC	$100x10^3$
	1/10HP, 120VAC	$1x10^5$
	1/6HP, 240VAC	$1x10^5$
KRPA, AgCdO		
	10A, 240VAC	$100x10^3$
	1/3HP, 120VAC	$1x10^5$
	1/2HP, 240VAC	$1x10^5$
KA, Ag		
	5A, 120VAC	
	3A, 240VAC	
	1/10HP, 120VAC	
	1/6HP, 240VAC	
KA, AgCdO		
	10A, 120VAC	
	6A, 240VAC	
	1/6HP, 120VAC	
	1/3HP, 240VAC	
Mechanical endurance	$10x10^6$ ops	

Coil Data

Coil voltage range	6 to 220VDC 6 to 240VAC
Coil insulation system according UL	Class B

Coil versions, DC coil

Coil code	Rated voltage VDC	Operate voltage VDC	Coil resistance Ω±10%	Rated coil power W
6	6	4.5	32	1.15
12	12	9.0	120	1.2
24	24	18.0	472	1.25
48	48	36.0	1800	1.3
110	110	82.5	10000	1.2
–	220	Use 110V relay with 10KΩ, 5W resistor in series		

All figures are given for coil without preenergization, at ambient temperature +23°C.

Coil Data (continued)

Coil versions, AC coil

Coil code	Rated voltage VAC	Operate voltage VAC	Coil resistance Ω±15%	Rated coil power VA
6	6	5.1	6	2.01
12	12	10.2	24	2.02
24	24	20.4	85	2.02
20	120	102.0	2250	2.1
240	240	204.0	9110	2.1

All figures are given for coil without preenergization, at ambient temperature +23°C.

Insulation Data

Initial dielectric strength	
between open contacts	$1000V_{rms}$
between contact and coil	$1000V_{rms}$
between adjacent contacts	$1000V_{rms}$
Initial insulation resistance	
between insulated elements	KRPA: 1000MΩ KA: 100MΩ

Other Data

Material compliance	EU RoHS/ELV, China RoHS, REACH, Halogen content refer to the Product Compliance Support Center at www.te.com/customersupport/rohssupportcenter
Ambient temperature	
DC coil	KRPA: -45°C to 70°C KA: -45°C to 85°C
AC coil	KRPA: -45°C to 55°C KA: -45°C to 70°C
Category of environmental protection IEC 61810	RTI - dust protected KRPA and RTO - open style KA
Terminal type	KRPA: 8- or 11-pin octal type plug KA: solder terminals
Weight	85g
Packaging/unit	tray/25 pcs., box/150pcs

Accessories

For details see datasheet Sockets and Accessories, KRPA Relays

Product Code	Description
27E891	Two pole DIN socket (use 20C318 clip)
27E892	Three pole DIN socket (use 20C318 clip)
27E122	Two pole track mount socket (use 20C318 clip)
27E123	Three pole track mount socket (use 20C318 clip)

11 2012, Rev 1112
www.te.com
© 2012 Tyco Electronics Corporation,
a TE Connectivity Ltd company

Catalog and product specification according to IEC 61810-1 and to be used only together with the 'Definitions' section

Catalog and product data is subject to the terms of the disclaimer and all chapters of the 'Definitions' section, available at http://relays.te.com/definitions

Catalog product data, 'Definitions' section, application notes and all specifications are subject to change

KRPA Series Panel Plug-in Relay (Continued)

Dimensions

KRPA

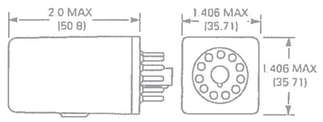

KA

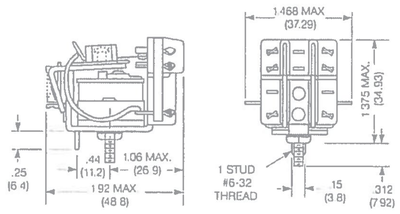

Terminal assignment

KRPA
1 form C

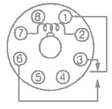

KRPA
2 form C

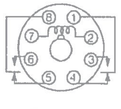

KRPA
3 form C

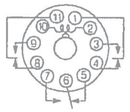

KA
1 form C

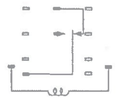

KA
2 form C

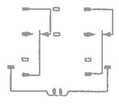

KA
3 form C

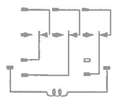

Product code structure

Typical product code: **KRPA -5 A Y -120**

Type
- **KRPA** Enclosed relay with octal-style plug
- **KA** Open style relay with solder terminals

Contact arrangement and rating
- **5** 1 form C (CO)
- **11** 2 form C (CO)
- **14** 3 form C (CO)

Coil input
- **A** AC, 50/60Hz
- **D** DC

Contact material and indicator lamp option
- **Y** Ag, no indicator lamp
- **G** AgCdO, no indicator lamp
- **N** AgCdO, with indicator (Code N only available with relay type KRPA)

Options
- **Leave blank** no additional options
- **F** Au flashed contacts
- **P** Push to test button

(Options F and P only available with relay type KRPA)

Coil voltage

Coil code: please refer to coil versions table

11-2012, Rev. 1112
www.te.com
© 2012 Tyco Electronics Corporation,
a TE Connectivity Ltd. company.

Catalog and product specification according to IEC 61810-1 and to be used only together with the 'Definitions' section.

Catalog and product data is subject to the terms of the disclaimer and all chapters of the 'Definitions' section, available at http://relays.te.com/definitions

Catalog product data, 'Definitions' section, application notes and all specifications are subject to change.

KRPA Series Panel Plug-in Relay (Continued)

Product Code	Arrangement	Contact Material	Coil	Option	Part Number
KA-5AG-120	1 form C, 1 CO	AgCdO	120VAC	Open style	7-1393099-1
KA-5AY-120		Ag			7-1393099-3
KA-5DG-6		AgCdO	6VDC		7-1393099-9
KA-5DG-12			12VDC		7-1393099-7
KA-5DG-110			110VDC		7-1393099-6
KA-11AG-120	2 form C, 2 CO		120VAC		3-1393099-6
KA-11AY-6		Ag	6VAC		4-1393099-1
KA-11AY-24			24VAC		4-1393099-0
KA-11AY-120			120VAC		3-1393099-9
KA-11DG-12		AgCdO	12VDC		4-1393099-3
KA-11DG-24			24VDC		4-1393099-5
KA-11DG-110			110VDC		4-1393099-2
KA-14AG-120	3 form C, 3 CO		120VAC		5-1393099-0
KA-14AY-120		Ag			5-1393099-4
KA-14DG-24		AgCdO	24VDC		5-1393099-7
KA-14DG-110			110VDC		5-1393099-5
KRPA-5AG-24	1 form C, 1 CO		24VAC	None	9-1393104-9
KRPA-5AG-120			120VAC		9-1393104-8
KRPA-5DG-6			6VDC		1393105-5
KRPA-5DG-12			12VDC		1393105-3
KRPA-5DG-24			24VDC		1393105-4
KRPA-5DY-12		Ag	12VDC		1393105-6
KRPA-5DY-24			24VDC		1393105-7
KRPA-11AG-6	2 form C, 2 CO	AgCdO	6VAC		2-1393104-8
KRPA-11AG-12			12VAC		2-1393104-4
KRPA-11AG-24			24VAC		1-1393105-2
KRPA-11AG-120			120VAC		2-1393104-5
KRPA-11AG-240			240VAC		2-1393104-7
KRPA-11AN-12			12VAC	Indicator	3-1393104-1
KRPA-11AN-24			24VAC		3-1393104-3
KRPA-11AN-120			120VAC		3-1393104-2
KRPA-11AN-240			240VAC		3-1393104-4
KRPA-11AY-6		Ag	6VAC	None	3-1393104-9
KRPA-11AY-12			12VAC		3-1393104-5
KRPA-11AY-24			24VAC		3-1393104-7
KRPA-11AY-120			120VAC		3-1393104-6
KRPA-11AY-240			240VAC		3-1393104-8
KRPA-11DG-6		AgCdO	6VDC		4-1393104-7
KRPA-11DG-12			12VDC		4-1393104-3
KRPA-11DG-24			24VDC		4-1393104-5
KRPA-11DG-48			48VDC		4-1393104-6
KRPA-11DG-110			110VDC		4-1393104-2
KRPA-11DG-125			125VDC		4-1393104-4
KRPA-11DG-24			24VDC		4-1393104-5
KRPA-11DG-48			48VDC		4-1393104-6
KRPA-11DN-12			12VDC	Indicator	5-1393104-0
KRPA-11DN-24			24VDC		5-1393104-1
KRPA-11DN-110			110VDC		4-1393104-9
KRPA-11DY-12		Ag	12VDC	None	5-1393104-6
KRPA-11DY-24			24VDC		5-1393104-7
KRPA-14AG-12	3 form C, 3 CO	AgCdO	12VAC		6-1393104-4
KRPA-14AG-24			24VAC		6-1393104-7
KRPA-14AG-120			120VAC		6-1393104-5
KRPA-14AG-240			240VAC		6-1393104-8
KRPA-14AN-24			24VAC	Indicator	7-1393104-4
KRPA-14AN-120			120VAC		7-1393104-3
KRPA-14AN-240			240VAC		7-1393104-5
KRPA-14AY-24		Ag	24VAC	None	7-1393104-8
KRPA-14AY-120			120VAC		7-1393104-7
KRPA-14AY-240			240VAC		7-1393104-9
KRPA-14DG-12		AgCdO	12VDC		8-1393104-2
KRPA-14DG-24			24VDC		8-1393104-4
KRPA-14DG-48			48VDC		8-1393104-5
KRPA-14DG-110			110VDC		8-1393104-1
KRPA-14DG-125			125VDC		8-1393104-3
KRPA-14DN-24			24VDC	Indicator	9-1393104-0
KRPA-14DY-24		Ag		None	9-1393104-3

11-2012, Rev. 1112
www.te.com
© 2012 Tyco Electronics Corporation,
a TE Connectivity Ltd company

Catalog and product specification according to IEC 61810-1 and to be used only together with the 'Definitions' section.

Catalog and product data is subject to the terms of the disclaimer and all chapters of the 'Definitions' section, available at http://relays.te.com/definitions

Catalog product data, 'Definitions' section, application notes and all specifications are subject to change

Sockets & Accessories, KRPA Relays

- **Sockets for relays with 8-pin (octal) and 11-pin (undecal) round plugs**
- **Screw terminals**
- **Hold down springs**
- **Various mounting options**



Approvals

UL E59244, CSA LR15734
Technical data of approved types on request

Technical Data

Socket contact material	Spring brass, tin plated
Socket body material	
27E122 and 27E123	Glass-filled polyester
27E891 and 27E892	Polyamide
Maximum current	10A
Maximum Voltage	300VAC

Ordering Code for Sockets

Product Code	Pins	Terminal type	Mounting	Part number
27E122	8	screw	panel/rail	1393143-6
27E891			snap-on DIN-rail	2-1419106-3
27E123	11		panel/rail	1393143-7
27E892			snap-on DIN-rail	2-1419106-4

All accessories must be ordered separately

Dimensions

Screw terminal socket for relays with 8-pin octal base 27E122
Offers screw termination for KRPA relays and other devices with 8 pin octal base. When panel mounting, two #6-32 screws of suitable length are required. When track mounting two 24A071 retainer clips or two 24A072 retainer clips are required

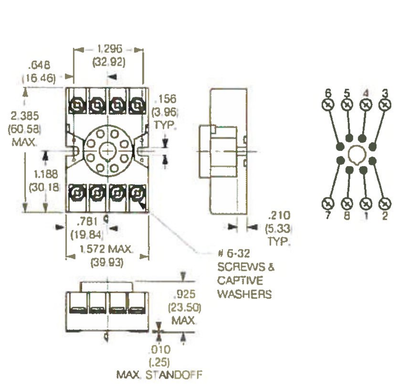

Screw terminal socket for relays with 11-pin undecal base 27E123
Offers screw termination for KRPA relays and other devices with 11-pin undecal base. When panel mounting, two #6-32 screws of suitable length are required. When track mounting, two 24A071 retainer clips or two 24A072 retainer clips are required —

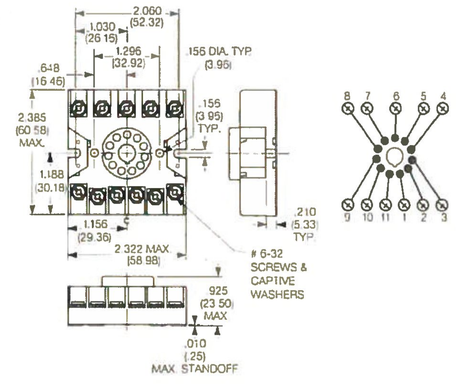

10-2012, Rev. 1012
www.te.com
© 2012 Tyco Electronics Corporation,
a TE Connectivity Ltd. company

Catalog and product specification according to IEC 61810-1 and to be used only together with the 'Definitions' section.

Catalog and product data is subject to the terms of the disclaimer and all chapters of the 'Definitions' section, available at http://relays.te.com/definitions

Catalog product data, 'Definitions' section, application notes and all specifications are subject to change

Sockets & Accessories, KRPA Relays (Continued)

Dimensions

Screw terminal, DIN rail, snap-mount socket 27E891

Offers screw termination for KRPA relays and other devices with 8 pin octal base. This socket is constructed with a spring-loaded latch which allows it to be quickly snapped onto or removed from a DIN or "top hat" style mounting track. No special tools or extra hardware is required for installation. Sockets have M3.5 screw terminals which accept up to two #12 AWG wires.

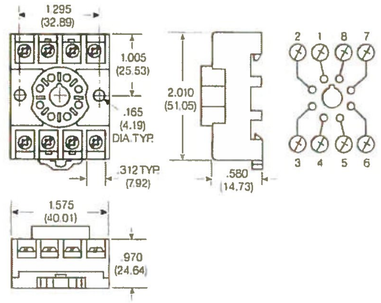

Screw terminal, DIN rail, snap-mount socket 27E892

Offers screw termination for KRPA relays and other devices with 11-pin undecal base. This socket is constructed with a spring loaded latch which allows it to be quickly snapped onto or removed from a DIN or "top hat" style mounting track. No special tools or extra hardware is required for installation. Sockets have M3.5 screw terminals which accept up to two #12 AWG wires.

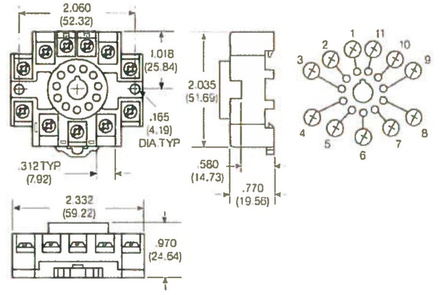

Ordering Code for Accessories

Product Code	Description	Part number
20C318	Snap-in relay hold down spring for use with KRPA, KCP and R10-T relay and KRPA sockets listed on these pages	4-1393159-8
20C176	Relay hold down spring for use with KRPA, KCP and R10-T relays and various hard mount KRPA sockets. Is held in place by mounting hardware (not supplied).	3-1393159-3
20C206	Relay hold down spring for use with KRP3 and KAP relays and various hard mount KRPA sockets. Is held in place by mounting hardware (not supplied).	1419111-1
20C419	Snap-in relay hold down spring (coil type) for use with various relays and various hard mount KRPA sockets.	5-1393159-0
24A110	Mounting track	1419111-6
24A071	Steel mounting clip with #6-32 screw - use with sockets on 24A110 track	1419111-5
24A072	Plastic twist mounting clip - use with sockets on 24A110 track	5-1393159-4
40G432	Plastic insulator - use with 24A071 to make end clip for 24A110 track	9-1393159-5

All accessories must be ordered separately

Dimensions

24A110 DIN rail style mounting track

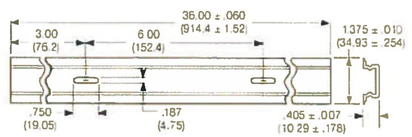

24A110 mounting track is designed to accept snap-mount sockets, as well as other P&B screw terminal sockets. Track is made of lightweight, sturdy extruded aluminum and is shipped in three-foot (914cm) lengths with mounting holes on six-inch (152mm) centers. Track can be cut to shorter lengths or used end-to-end.

Track and mounting accessories



10-2012, Rev. 1012
www.te.com
© 2012 Tyco Electronics Corporation,
a TE Connectivity Ltd. company

Catalog and product specification according to IEC 61810-1 and to be used only together with the 'Definitions' section.

Catalog and product data is subject to the terms of the disclaimer and all chapters of the 'Definitions' section, available at http://relays.te.com/definitions

Catalog product data 'Definitions' section, application notes and all specifications are subject to change.

This Drawing, which contains proprietary Information is the property of General Electric Company. It shall not be reproduced in any manner nor disclosed to third parties without written permission of General Electric Company

HARMON PART NUMBERING

HPN	VOLTAGE (NOMINAL)	TYPE OF SERVICE	CLAMPING VOLTAGE	MCOV	TOTAL PEAK SURGE CURRENT	SURGE ENERGY PER PHASE (MIN)	RESPONSE TIME	RELATIVE HUMIDITY	DESCRIPTION	TERMINATION	DIMENSIONS / WIRING DIAGRAM	NOTES
-000	240 VAC RMS L-L	3-WIRE, SINGLE PHASE, 50/60 HZ	260 VOLTS AT 1 mA L-N	NOT AVAILABLE	---	16667 JOULES (SEE NOTE 1)	6 ns	100%	FUSED SURGE PROTECTOR WITH INDICATORS	LEAD WIRES 14 AWG 18" LONG MIN.	SEE FIGURES 1 AND 2	---
-001	120/240 VAC 50/60 HZ 50-100 A SERVICE	SINGLE PHASE WYE; 3 WIRE + GROUND CONNECTION	NOT AVAILABLE	275 VAC L-L; 150 VAC L-G, L-N, N-G	117,000 A	1,800 JOULES	1 ns	0-97% NON-CONDENSING	PRIMARY SURGE PROTECTOR WITH INDICATORS	SCREW TERMINALS, ACCEPTS 10AWG AND SMALLER STRANDED WIRE.	SEE FIGURE 3 (NEMA TYPE 12 ENCLOSURE)	NOT FOR NEW DESIGN USE -003
-002	120/240 VAC 50/60 HZ 50-100 A SERVICE	SINGLE PHASE WYE; 3 WIRE + GROUND CONNECTION	NOT AVAILABLE	275 VAC L-L; 150 VAC L-G, L-N, N-G	117,000 A	1,800 JOULES	1 ns	0-97% NON-CONDENSING	PRIMARY SURGE PROTECTOR WITH INDICATORS, INTERNALLY FUSED	PRESSURE TYPE, ACCEPTS 8AWG AND SMALLER STRANDED WIRE.	SEE FIGURES 4 AND 5 (NEMA TYPE 12 ENCLOSURE)	NOT FOR NEW DESIGN USE -004
-003	120/240 VAC 50/60 HZ 300 A SERVICE	SPLIT PHASE WYE; 3 WIRE + GROUND CONNECTION	---	275 VAC L-L; 150 VAC L-G, L-N, N-G	120,000 A (8/20µs)	1,800 JOULES	1 ns	0-90% NON-CONDENSING	PRIMARY SURGE PROTECTOR WITH INDICATORS, WITH FORM C CONTACTS FOR REMOTE UNIT STATUS MONITORING, 2A@ 30VDC, 0.6A@ 110VDC, 0.6A@ 125VAC	SCREW TERMINALS, ACCEPTS 10AWG AND SMALLER STRANDED WIRE.	SEE FIGURES 6 AND 7	---
-004	120/240 VAC 50/60 HZ 300 A SERVICE	SPLIT PHASE WYE; 3 WIRE + GROUND CONNECTION	---	275 VAC L-L; 150 VAC L-G, L-N, N-G	120,000 A (8/20µs)	1,800 JOULES	1 ns	0-90% NON-CONDENSING	PRIMARY SURGE PROTECTOR WITH INDICATORS, INTERNALLY FUSED, WITH FORM C CONTACTS FOR REMOTE UNIT STATUS MONITORING, 2A@ 30VDC, 0.6A@ 110VDC, 0.6A@ 125VAC	SCREW TERMINALS, ACCEPTS 2 AWG AND SMALLER STRANDED WIRE.	SEE FIGURES 8 AND 9	---
-005	120/240 VAC 50/60 HZ 300 A SERVICE	SPLIT PHASE WYE; 3 WIRE + GROUND CONNECTION	---	275 VAC L-L; 150 VAC L-G, L-N, N-G	120,000 A (8/20µs)	1,800 JOULES	1 ns	0-90% NON-CONDENSING	PRIMARY SURGE PROTECTOR WITH INDICATORS, WITH FORM C CONTACTS FOR REMOTE UNIT STATUS MONITORING, 2A@ 30VDC, 0.6A@ 110VDC, 0.6A@ 125VAC	WIRE LEADS	SEE FIGURES 6 AND 7	THIS SURGE PROTECTOR IS IDENTICAL TO –003 EXCEPT THAT IT HAS FLYING LEADS WIRED TO THE SCREW TERMINALS.

DESCRIPTION: SURGE PROTECTOR WITH INDICATORS

MARKING: MANUFACTURER AND MODEL NUMBER

ELECTRICAL SPECIFICATION:
SEE HPN TABLE .
EACH PHASE IS EQUIPPED WITH A STATUS INDICATOR LIGHT.

MATERIAL SPECIFICATION:
SEE HPN TABLE.
STORAGE TEMPERATURE: -40°C TO 70°C
OPERATING TEMPERATURE
-000: -40°C TO 50°C
-001/-005: -40°C TO 70°C

MAXIMUM PHYSICAL DIMENSION:
SEE FIGURES.

NOTES:
1. TEST CONDITION FOR SURGE ENERGY PER PHASE: 500A AT 5000V FOR 100 CONSECUTIVE TIMES AT A DURATION OF 0.0083 SECONDS EACH PULSE.
2. 010132-001 IS A SPECIAL BN SPECIFIED SURGE PROTECTOR.
1. THE HPN MAY HAVE A –30 SUFFIX TO DENOTE SPECIAL CUSTOMER CONTRACT PRICING. (I.E. 010132-005-30)

REVISION CONTROL				
REV	ECRN	DATE	BY	APPRV
A	877-0012	10/27/94	ADH	ADH
B	81284-13	4/7/95	ADH	ADH
CA0	90013308	11/10/97	ADH	ADH
CB0	90024496	12/17/99	DFR	ADH
CC0	90020330	2/6/01	ADH	ADH

ENGINEERING	
Approved A. HOWERY	Date 10/94
Engineer A. HOWERY	
Drawn By A. HOWERY	Date 10/27/94

Harmon Industries
Grain Valley, MO

Title	SURGE PROTECTOR WITH INDICATORS
Drawing No. 010132-XXX	Sheet 1 of 3

This Drawing, which contains proprietary Information is the property of General Electric Company. It shall not be reproduced in any manner nor disclosed to third parties without written permission of General Electric Company

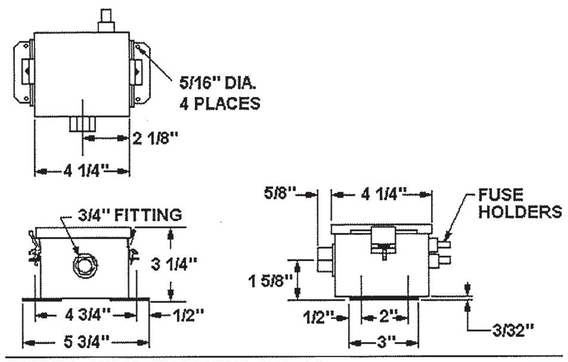

FIGURE 1: SURGE PROTECTOR HPN -000

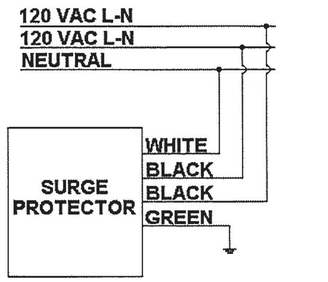

FIGURE 2: WIRING DIAGRAM FOR HPN -000

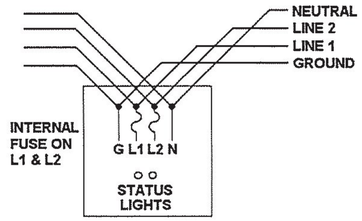

FIGURE 5: WIRING DIAGRAM FOR HPN -002

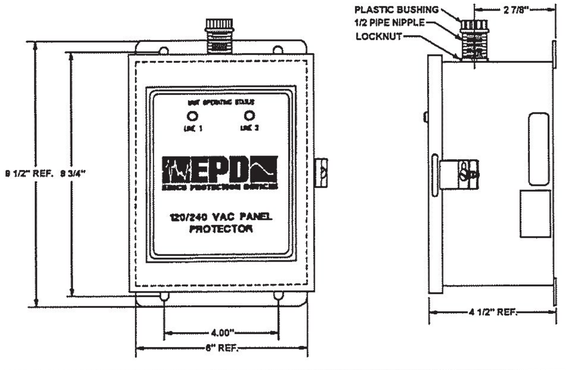

FIGURE 3: SURGE PROTECTOR HPN -001

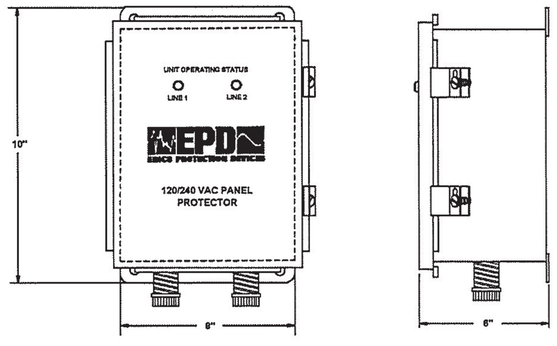

FIGURE 4: SURGE PROTECTOR HPN -002

REV
CC0

Harmon Industries
Grain Valley, MO

Title	SURGE PROTECTOR WITH INDICATORS	
Drawing No.	010132-XXX	Sheet 2 of 3

This Drawing, which contains proprietary Information is the property of General Electric Company. It shall not be reproduced in any manner nor disclosed to third parties without written permission of General Electric Company

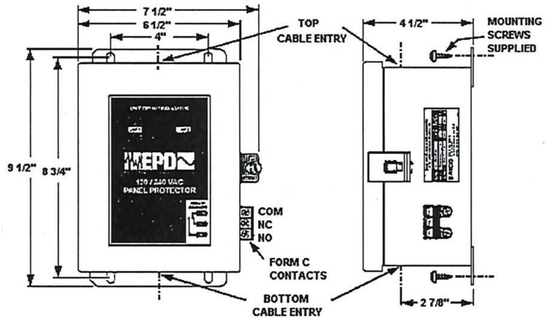

FIGURE 6: SURGE PROTECTOR HPN –003 AND –005
NOTE: HPN –005 HAS FLYING LEADS NOT SHOWN IN FIGURE 6.

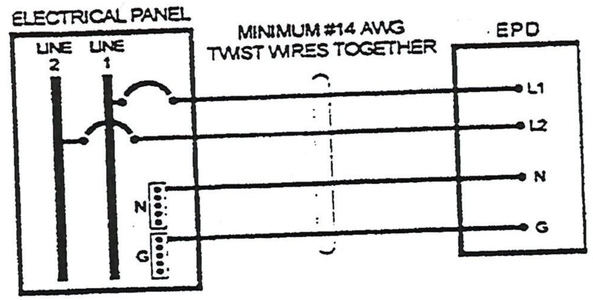

FIGURE 7: WIRING DIAGRAM FOR HPN –003 AND HPN –005

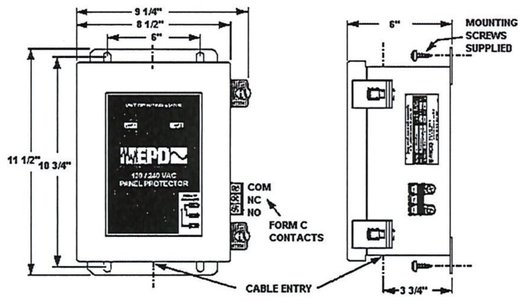

FIGURE 8: SURGE PROTECTOR HPN-004

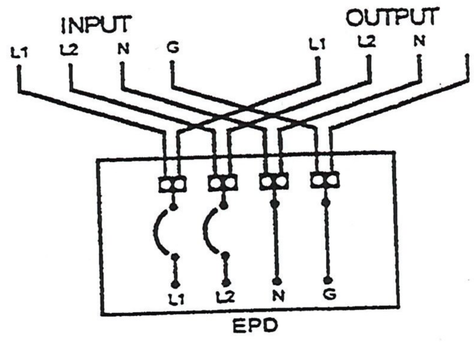

FIGURE 9: WIRING DIAGRAM FOR HPN -004

REV
CC0

Harmon Industries
Grain Valley, MO

Title	SURGE PROTECTOR WITH INDICATORS	
Drawing No.	010132-XXX	Sheet 3 of 3

This Drawing, which contains proprietary Information is the property of General Electric Company. It shall not be reproduced in any manner nor disclosed to third parties without written permission of General Electric Company

HARMON PART NUMBERING

HPN	DEL NO. OR CATALOG NO.	SIZE (AWG)	NO. OF STRANDS	INSULATION MATERIAL	INSULATION THICKNESS (INCHES)	JACKET MATERIAL	JACKET THICKNESS (INCHES)	VOLTAGE RATING	APPROX. O.D. (INCHES)	APPROX. WEIGHT (LBS. / 1000 FT.)	MAXIMUM CURRENT-CARRYING CAPACITY	CONDUIT SIZE (INCHES)	FIGURE
-001	-	6	61X24 AWG OR 64x25 AWG	HYPALON	4/64 NOM.	-	-	600V	0.305/0.35	133	-	1.25	3
-002	DEL 020	5	91X.0201"	EPR	4/64	NEOPRENE	2/64	2000V	0.44	182	91A	1.25	1
-003	DEL 022	4	105X.0201"	EPR	4/64	NEOPRENE	2/64	2000V	0.46	204	98A	1.25	1
-004	DEL 024	3	125X.0201"	EPR	4/64	NEOPRENE	2/64	2000V	0.48	223	107A	1.25	1
-005	DEL 026	2	150X.0201"	EPR	4/64	NEOPRENE	2/64	2000V	0.53	278	125A	1.5	1
-006	DEL 030	1	225X.0201"	EPR	5/64	NEOPRENE	3/64	2000V	0.68	459	160A	2	1
-007	DEL 002	16	19X.0117"	EPR	2/64	NEOPRENE	1/64	600V	0.16	19	18A	0.5	1
-008	DEL 004	14	19X.0142"	EPR	2/64	NEOPRENE	1/64	600V	0.17	24	22A	0.5	1
-009	DEL 008	14	19X.0147"	EPR	3/64	NEOPRENE	1/64	2000V	0.21	31	23A	0.5	1
-010	DEL 010	12	19X.0179"	EPR	3/64	NEOPRENE	1/64	2000V	0.22	40	26A	0.75	1
-011	DEL 014	10	27X.0201"	EPR	3/64	NEOPRENE	1/64	2000V	0.26	58	37A	0.75	1
-012	DEL 016	8	37X.0201"	EPR	3/64	NEOPRENE	1/64	600V	0.28	74	52A	1	1
-100	112-12-1051	16	19	EPR	2/64	NEOPRENE	1/64	600V	0.16	20	-	-	2
-101	112-12-1081	14	19	EPR	2/64	NEOPRENE	1/64	600V	0.18	26	-	-	2
-102	112-12-1101	12	19	EPR	3/64	NEOPRENE	1/64	600V	0.23	42	-	-	2
-103	112-12-1140	10	19	EPR	3/64	NEOPRENE	1/64	600V	0.25	58	-	-	2
-104	112-12-1171	9	19	EPR	3/64	NEOPRENE	1/64	600V	0.26	67	-	-	2
-105	112-12-1201	6	19	EPR	.047	NEOPRENE	.015	600V	0.314	-	-	-	2

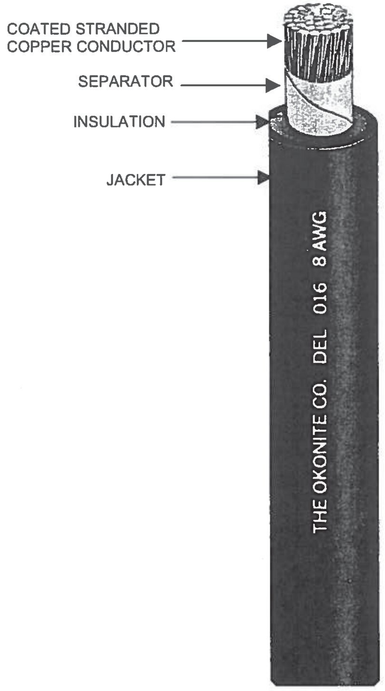

FIGURE 1: TYPE DEL WIRE

NOTE:
HYPALON IS DUPONT'S TRADE NAME FOR CHLOROSULFONATED POLYETHYLENE.

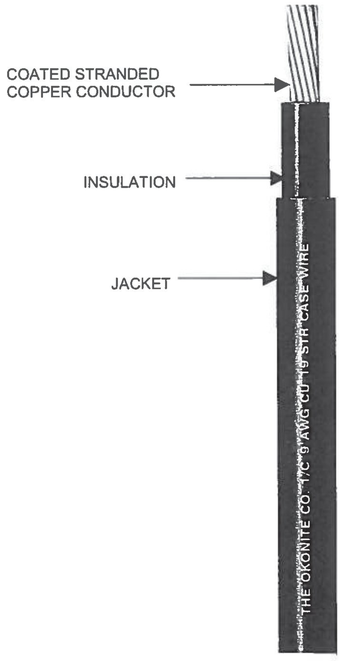

FIGURE 2: CASE WIRE

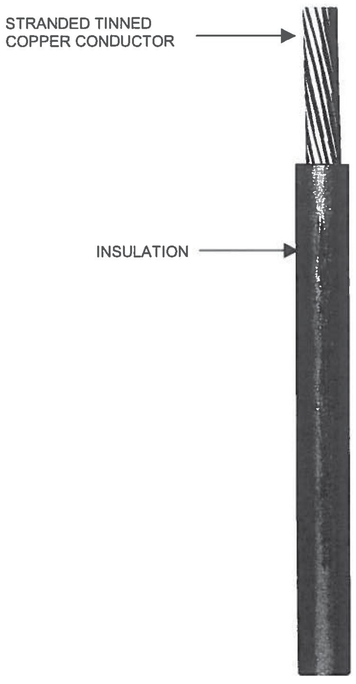

FIGURE 3: HYPALON WIRE

DESCRIPTION:
WIRE, DIESEL AND CASE

MARKING:
HPN -001; SIZE: 6AWG, 600 VOLTS, MFR.NAME
HPN –002 THRU –012; MFR. NAME, DEL, #. SIZE
HPN –10X; MFR. NAME, SIZE & STRANDING, CASE WIRE

ELECTRICAL SPECIFICATION:
SEE HPN TABLE

MATERIAL SPECIFICATION:
CONDUCTOR: COATED STRANDED COPPER

HPN –001
90C CONTINUOUS RATING
75C CONTINUOUS WET RATING

HPN –002/-012:
90C CONTINUOUS RATING
110C HOT SPOT RATING
130C EMERGENCY OVERLOAD RATING
300C SHORT CIRCUIT RATING

HPN –1XX
90C CONTINUOUS RATING
130C EMERGENCY OVERLOAD RATING
250C SHORT CIRCUIT RATING

MAXIMUM PHYSICAL DIMENSION:
SEE HPN TABLE

REVISION CONTROL				
REV	ECRN	DATE	BY	APPRV
FA0	90001508	01/03/96	BJM	ADH
FB0	90025069	11/19/99	DFR	ADH
FC0	90028133	5/18/00	BRK	ADH

ENGINEERING	
Approved A HOWERY	Date 5/00
Engineer A.HOWERY	
Drawn By BROOKE KAISER	Date 5/18/00

Harmon Industries
Grain Valley, MO

Title
WIRE, DIESEL AND CASE

Drawing No.	Sheet
012033-XXX	1 of 1

Cable: Wire 16 AWG 19 STR EPL/PVC BLU GETSGS # 012092-002
Wire 10 AWG 19 STR EPL/PVC BLU GETSGS # 012092-000

Okonite® TC Blue Tower and Case Wire

600 Volt

One Copper Conductor/90°C Rating



A Uncoated, Stranded Copper Conductor
B Insulation—Okonite
C Jacket—Blue Okoseal

Insulation

Okonite EPR is Okonite's trade name for its heat resistant, mechanically rugged ethylene-propylene based insulating compound. The insulation thickness for wire sizes are listed below.

Jackets and Finishes

The Blue Okoseal® (PVC) jacket supplied with this cable provides excellent resistance to mechanical abuse, flame, weathering, and most acids, oils, and alkalies.

Applications

Okonite Tower and Case Wire is recommended for use as relay and associated signal apparatus wiring and for connector wire use where a flexible, small diameter wire is required.

Specifications

Conductor: Uncoated stranded copper stranded per ASTM B-8.
Insulation: Per ICEA S-95-658. Meets or exceeds all requirements for EPR insulation.
Jacket: Per ICEA S-95-658. Meets or exceeds all requirements.
Okonite Tower and Case Wire meets or exceeds the requirements of AREMA Manual Part 10.3.15.

Product Features

- Exceptional heat resistance.
- 90°C Continuous Rating
130°C Emergency Overload Rating.
250°C Short Circuit Rating.
- Mechanically rugged.
- Flexible, easy to handle and splice.
- Flame resistant—meets U.L. horizontal flame test.
- Resistant to most oils acids, alkalies and effects of weather.
- Stable electrical and physical properties.

Catalog Number	Size AWG	No. of Strands	Insulation Thickness Mils	Jacket Thickness Mils	Approx. O.D. (in.)	Approx. Net Wt. Lbs./m'	Approx. Ship Wt. Lbs./m'
▲ 152-11-3002	16	19	30	20	.17	20	24
▲ 152-11-3024	14	19	30	20	.20	26	28
152-11-3026	12	19	45	20	.23	42	46
▲ 152-11-3038	10	19	30	20	.23	56	60
152-11-3108	10	37	45	20	.26	58	62
152-11-3010	9	19	45	25	.29	71	75

▲ **Authorized Stock Item** - Available from our Customer Service Centers.
Note: The construction described has a Blue Jacket. Consult your local Okonite Representative for details about alternate colors.
Standard Package - #16 AWG and #14 AWG, 10000 spool; #12 AWG, #10 AWG, and #9 AWG, 500' spool.

THE OKONITE COMPANY
Ramsey, New Jersey 07446

PART NUMBERING

PN	AWG	NO. OF STRANDS	COLOR	INSULATION THICKNESS (IN.)	JACKET THICKNESS (IN.)	O.D. (IN.)	LBS. M/Ft
-000	6	19	BLACK	.030	.005	.26	97
-001	10	1	BLACK	.020	.004	.16	40
-002	6	19	GREEN	.030	.005	.26	97
-003	6	19	RED	.030	.005	.26	97
-004	12	19	RED	.015	.004	.13	25
-005	12	19	BLACK	.015	.004	.13	25
-006	10	1	RED	.020	.004	.16	40
-007	10	1	WHITE	.020	.004	.16	40
-008	4	19	BLACK	.040	.006	.33	154
-009	10	19	RED	.020	.004	.17	39
-010	10	19	WHITE	.020	.004	.17	39
-011	8	19	WHITE	.030	.005	.22	64
-012	6	19	WHITE	.030	.005	.26	97
-013	10	1	GREEN	.020	.004	.16	40

FIGURE 1:

DESCRIPTION: WIRE, THHN

ELECTRICAL SPECIFICATION:
600 VOLTS

MATERIAL SPECIFICATION:
OPERATING TEMPERATURE:
DRY: 90°C
WET: 75°C
GASOLINE AND OIL RESISTANT
CONDUCTORS: STRANDED OR SOLID COPPER
INSULATION: PVC
JACKET: NYLON

MAXIMUM PHYSICAL DIMENSION:
SEE PN TABLE

REVISION CONTROL				
REV	ECRN	DATE	BY	APPRV
CC0	90106641	10/07	BS	Prapulla

ENGINEERING	
Approved Prapulla	Date 10/07
Engineer ANAND GOGATE	
Drawn By SUBASH .B	Date

GE Transportation Systems
Global Signaling

Argo and Dillingham Rds, Grain Valley, MO 64029

Title WIRE, THHN

Drawing No.	Sheet
012253-XXX	1 of 1

Carolprene® Jacketed Type SJOOW

90°C, 300 Volt, UL/CSA Portable Cord

Product Construction:

Conductors:
- 18 through 10 AWG fully annealed stranded bare copper

Insulation:
- Premium-grade, color-coded 90°C EPDM
- Color code: See chart below

Jacket:
- Carolprene®, black
- Temperature range: -40°C to +90°C

Jacket Marking:
- CAROL (SIZE) (mm²) 90°C (UL) WATER RESISTANT SJOOW CSA (-40°C) FT2 P-7K-123033 MSHA 300 VOLT ROHS MADE IN USA (TRU-MARK SEQUENTIAL FOOTAGE)

Applications:
- Portable tools and equipment
- Portable appliances
- Small motors and associated machinery

Features:
- Excellent resistance to oil and moisture
- Good tensile strength, elongation and aging characteristics
- High flexibility
- Excellent abrasion resistance
- Water-resistant*
- UL Listed and CSA Certified for indoor and outdoor use
- Ozone-, sunlight (UV)- and weather-resistant
- TRU-Mark® sequential footage marking

Industry Approvals:
- UL Flexible Cord - UL 62
- CSA Flexible Cord - C22.2-49
- MSHA Approved
- RoHS Compliant

Packaging:
- 250' (76.2 m), 500' (152.4 m), 1000' (304.8 m)
- Other put-ups available on special order

*Suitable for immersion in water if properly sealed and terminated.

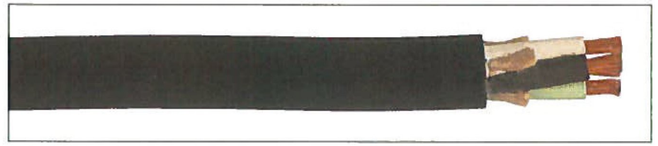

TYPE SJOOW – 300 VOLT – UL/CSA

CATALOG NUMBER	NO. OF COND.	AWG SIZE	COND. STRAND	NOMINAL INS. THICKNESS		NOMINAL O.D.		CURRENT AMPS†	APPROX. NET WT. LBS/M'(5)	STD. CTN.
				INCHES	mm	INCHES	mm			
01310	2	18	16/30	0.030	0.76	0.285	7.24	10	46	1000'
01311	3	18	16/30	0.030	0.76	0.305	7.75	10	60	1000'
01344	4	18	16/30	0.030	0.76	0.330	8.38	7	72	250'
01312	2	16	26/30	0.030	0.76	0.310	7.87	13	56	1000'
01342	3	16	26/30	0.030	0.76	0.330	8.38	13	72	250'
01343	4	16	26/30	0.030	0.76	0.365	9.27	10	89	250'
01358	2	14	41/30	0.030	0.76	0.340	8.64	18	75	250'
01360	3	14	41/30	0.030	0.76	0.370	9.40	18	100	250'
01364	4	14	41/30	0.030	0.76	0.410	10.41	15	128	250'
01379	2	12	65/30	0.030	0.76	0.410	10.41	25	108	250'
01380	3	12	65/30	0.030	0.76	0.430	10.92	25	136	250'
01381	4	12	65/30	0.030	0.76	0.475	12.07	20	177	250'
01382*	2	10	104/30	0.045	1.14	0.560	14.22	30	190	250'
01383	3	10	104/30	0.045	1.14	0.580	14.73	30	236	250'
01384	4	10	104/30	0.045	1.14	0.655	16.64	25	296	250'

Cord furnished with UL and CSA labels.
* Non-stock item; minimum quantity purchase required.
† Green conductor for grounding only. Ampacities based on NEC Table 400.5(A)(1).
(5) Actual shipping weight may vary.

COLOR CODE CHART

NO. OF CONDUCTORS	COLOR
2	Black, White
3	Black, White, Green
4	Black, White, Red, Green

This Drawing, which contains proprietary Information is the property of General Electric Company. It shall not be reproduced in any manner nor disclosed to third parties without written permission of General Electric Company

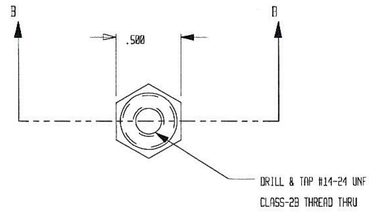

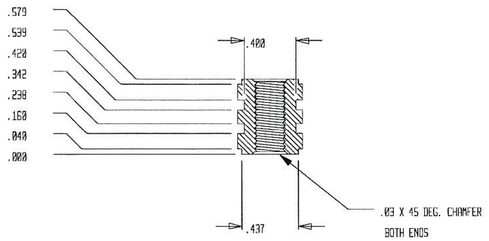

SECTION B-B

BRASS THREADED INSERT

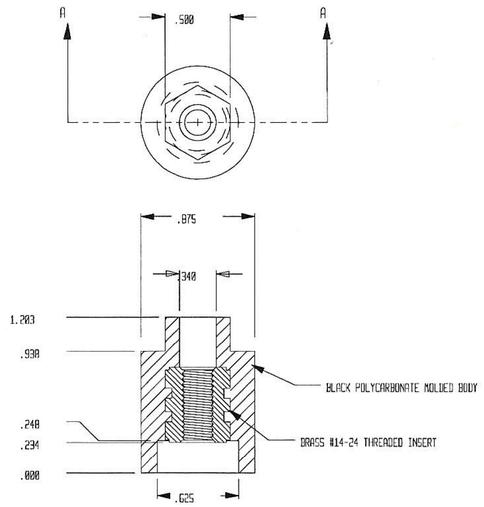

SECTION A-A

NOTE:

1. MANUFACTURED BY RUCO PRODUCTS, BLUE SPRINGS MO.

BRASS INSERT NOTES:

1. MATERIAL: FREE CUTTING BRASS, HALF HARD TEMPER (H-02)
   HPN 36865-429 BAR

2. FINISH: BRIGHT NICKEL (.0024 TO .0026 IN THICK)
   PER ASTM B456-71 1979.

MFG: FISCHER SPECIAL CO.

CORNELL MFG. CO.
P/N 1424-32187
OR EQUIVALENT

REV	ECAN	DATE	BY	APPR
A00	90031900	12/00	CAG	PEB
A10	90030951	10/00	MTK	PEB
A80	90015267	3/98	MTK	PEB
AA0	250-6589	5/95	PEB	PEB

ENGINEER: P. BROWN
SCALE: 1:1
DRAWN BY: P. BROWN
DATE: 5/95
MATERIAL: ---
FINISH: ---
TOLERANCE UNLESS NOTED
DECIMALS: .xx : .015, .xxx : .005
FRACTIONS: +/- ---
ANGLES: +/- ---

Harmon
HARMON INDUSTRIES, INC.
ARGO & DILLINGHAM ROADS
GRAIN VALLEY, MO. 64029
(800) 825-3178

TITLE: HARMON INSULATED NUT

FILE TYPE: CADKEY
DRAWING NO.: 013986-000
SHEET: 1 OF 1
SIZE: B

RECO
RAILWAY EQUIPMENT CO.

CRAGG RAILCHARGER®
BATTERY CHARGERS
TEMPERATURE SENSORS
& VOLTAGE MONITORS

ETC BATTERY CHARGER

STANDARD FEATURES

- Fully Automatic
- For All Lead Acid & NiCad Batteries
- Switch Selectable Cell Configuration
- LED Status Indicating Lights
- Amp Meter
- Volt Meter
- Temperature Compensation with Controlled Limits
- Adjustable Current Limit
- Battery Voltage Monitor with Relay Output
- Remote Voltage Sensing Capability
- AAR/AREMA Terminals
- Delayed Power-up, 5-10 seconds
- AC & DC Circuit and Transient Protection
- Meets or Exceeds AAR/AREMA Specifications
- Rack mounting kit available
- 2-Year Limited Warranty

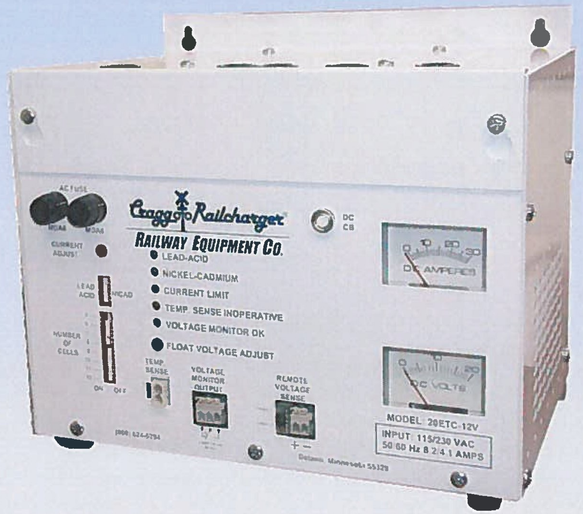

SPECIFICATIONS

115/230 VAC ± 15%, 50, 60, 100Hz
± 1% Voltage Regulation
<1V Ripple, Peak to Peak at Max. Output Current
Operating Temperature -40°C to +70°C
with 0-95% non-condensing humidity

MODEL	CELLS	INPUT VOLTS - AMPS	OUTPUT AMPS	OUTPUT VOLTS	WIDTH-HEIGHT–DEPTH	SHIP WEIGHT
10ETC-12V	5-8 Lead Acid 5-12 NiCad	115VAC – 4.2 amps 230VAC – 2.1 amps	10 amps	7 - 18.8	12.00 x 10.12 x 8.75 inches	39 Lbs.
20ETC-12V	5-8 Lead Acid 5-12 NiCad	115VAC – 8 amps 230VAC – 4 amps	20 amps	7 - 18.8	12.00 x 10.12 x 8.75 inches	40 Lbs.
40ETC-12V	5-8 Lead Acid 5-12 NiCad	115VAC – 14 amps 230VAC – 7 amps	40 amps	7 - 18.8	13.00 x 13.75 x 11.75 inches	52 Lbs.
60ETC-12V	5-8 Lead Acid 5-12 NiCad	115VAC – 18 amps 230VAC – 9 amps	60 amps	7 - 18.8	13.00 x 13.75 x 11.75 inches	74 Lbs.
30ETC-24V	11-18 Lead Acid 19-26 NiCad	115VAC – 20 amps 230VAC – 10 amps	30 amps	24 - 42.5	13.00 x 13.75 x 11.75 inches	63 Lbs..

Title	Drawing No.	Rev.	Sheet
CHARGER, BATTERY	017061-XXX	DC0	3 OF 5

HARMON PART NUMBERING

HPN	TYPE	NOM. AH CAPACITY	NUMBER OF CELLS	SPECIFIC GRAVITY	DIMENSIONS			WEIGHT		FIGURE (SINGLE CELL SHOWN)
					LENGTH	WIDTH	HEIGHT	UNPACKED	DOMESTIC PACKED	
-000	EMP-9	160	1	1.215	5.16"	10.1"	17.9"	66 LBS.	70 LBS.	SEE FIGURE 1
-001	EMP-7	120	1	1.215	4.34"	10.1"	17.9"	52 LBS.	56 LBS.	SEE FIGURE 1
-002	3EMP-5	80	3	1.215	10.25"	10.1"	17.9"	105 LBS.	114 LBS.	SEE FIGURE 1
-003	EMP-11	200	1	1.215	6.88"	10.1"	17.9"	83 LBS.	94 LBS.	SEE FIGURE 1
-004	EMP-13	240	1	1.215	6.88"	10.1"	17.9"	92 LBS.	98 LBS.	SEE FIGURE 1
-200	EJ-17	750	1	1.215	8.1"	11.0"	18.7"	147 LBS	156 LBS	SEE FIGURE 2
-201	ELM-160	160	1	1.210 –1.220	6.63"	5.42"	18.85"	29 LBS.	--	SEE FIGURE 3
-202	ELM-200	200	1	1.210 –1.220	6.63"	5.42"	18.85"	34 LBS.	--	SEE FIGURE 3
-203	ELM-240	240	1	1.210 –1.220	6.63"	5.42"	18.85"	40 LBS.	--	SEE FIGURE 3
-204	ELM-340	340	1	1.210 –1.220	6.69"	8.42"	18.85"	64 LBS.	--	SEE FIGURE 3
-205	ELM-425	425	1	1.210 –1.220	6.69"	8.42"	18.85"	75 LBS.	--	SEE FIGURE 3
-206	ELM-120	120	1	1.210 –1.220	6.63"	5.42"	13.56"	25 LBS.	--	SEE FIGURE 3
-207	ELM-710	710	1	1.210 –1.220	7.00"	12.50"	19.16"	118 LBS.	--	SEE FIGURE 3

HPN	TYPE	NOM. AH CAPACITY	NUMBER OF CELLS	VOLTAGE	SPECIFIC GRAVITY	DIMENSIONS OF BATTERY			FIGURE	NOTES
						LENGTH	WIDTH	HEIGHT		
-100	EI-7	288	6	12 V	1.170 TROPICAL	42.1"	11.0"	18.7"	SEE FIGURE 2 (ONLY ONE CELL SHOWN)	BATTERIES HAVE SPECIFIC GRAVITY FOR TROPICAL LOCATIONS, INTERCELL CONNECTORS, HYDROMETER, BOLT PACKAGES, GREASE, AND FLAME ARRESTOR.

DESCRIPTION: BATTERY, LEAD ACID

MARKING: MANUFACTURER, MANUFACTURER'S MODEL NUMBER

MATERIAL SPECIFICATION:

SEDIMENT SPACE:
- HPN -00X: 3.0"
- HPN -1XX AND –200: 0.75"

ELECTROLYTE OVER PLATES:
- HPN -00X: 2.3"
- HPN -1XX AND –200: 2.1"

CONTAINER:
- HPN -00X: POLYSTYRENE
- HPN -1XX AND –200: STYRENE ACRYLONITRILE COPOLYMER

COVER:
- HPN -00X: STYRENE BUTADIENE
- HPN -1XX AND –200: FLAME RETARDANT PVC
- HPN –201 THROUGH –207: HI-IMPACT POLYPROPYLENE

SEPARATORS:
- HPN -00X, -1XX, AND –200: MICROPOROUS RUBBER
- HPN –201 THROUGH –207: HIGH POROSITY MICROPOROUS POLYETHYLENE SLEEVE.

POST TYPE:
- HPN -00X, –1XX: SINGLE POST
- HPN –200 THROUGH –203 AND –206: DOUBLE POSTS
- HPN –204, -205 AND –207: FOUR POSTS

POST SEAL TYPE:
- HPN -00X: BURNED RING
- HPN -1XX AND –200: SLIDE-LOCK SEAL

PLATE SUSPENSION TYPE:
- POSITIVE: HPN -00X: LEDGE HUNG
  HPN -1XX AND –200: BRIDGE HUNG
- NEGATIVE: HPN -00X: LEDGE HUNG
  HPN -1XX AND -200: BOTTOM SUPPORTED

PLATES (HPN –201 THROUGH –207)
- POSITIVE: SQUARE TUBULAR, W/LOW ANTIMONY ALLOY SPINES
- NEGATIVE: FLAT PLATE, PASTED, W/ CALCIUM ALLOY GRID

VENT TYPE: FLAME ARRESTOR, FUSED ALUMINA

BOLT CONNECTORS:
- HPN –00X, -1XX, AND –200: STAINLESS STEEL, STANDARD ENGLISH MEASURE, HEX-HEAD

INTERCELL CONNECTORS: LEAD-PLATED COPPER

ELECTRICAL SPECIFICATION:

FLOAT VOLTAGE:
- ACCEPTABLE RANGE: 2.15 - 2.22 VPC
- RECOMMENDED: 2.20 VPC

MAXIMUM PHYSICAL DIMENSION:

PLATE DIMENSIONS:
- POSITIVE:
  - HPN -00X: .44" THICK
  - HPN -1XX AND –200: 10.9"H X 9.2"W X .35"T
- NEGATIVE:
  - HPN -00X: .18" THICK
  - HPN -1XX AND –200: 11.4"H X 9.4"W X .24"T

NOTE:

FOR HPNS –201 THROUGH –207, USE TEMPERATURE-COMPENSATED CHARGING.



FIGURE 1: HPN -00X (SINGLE CELL SHOWN)



FIGURE 2: HPN -1XX AND –200 (SINGLE CELL SHOWN)

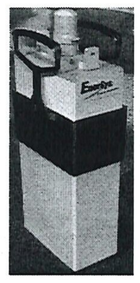

FIGURE 3: HPN –201 THRU -207

REVISION CONTROL				
REV	ECRN	DATE	BY	APPRV
CA0	90014658	2/4/98	ADH	ADH
CB0	90037354	2/02	ADH	ADH

ENGINEERING	
Approved A. HOWERY	Date 2/4/98
Engineer A. HOWERY	
Drawn By B. KAISER	Date 6/4/99

Harmon Industries
Grain Valley, MO

Title BATT LEAD ACID

Drawing No. 017123-XXX

Sheet 1 of 1

3597 Contact Heater Assembly
Reference F

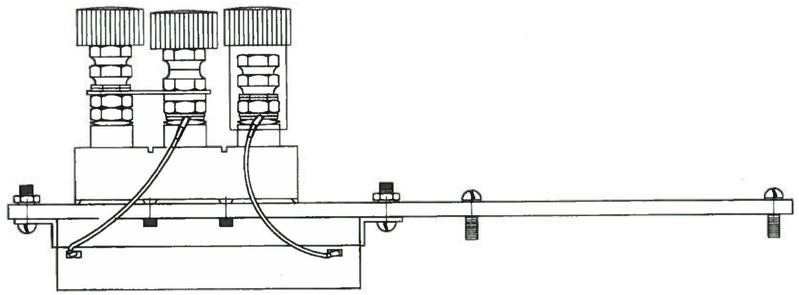

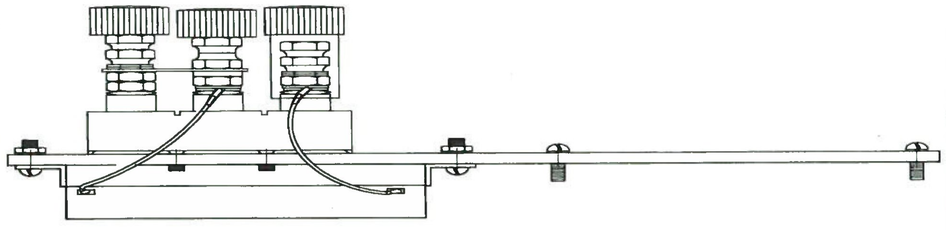

WESTERN-CULLEN-HAYES, INC.
2700 W. 36TH PLACE CHICAGO, IL. 60632
(773) 254-9600 FAX (773) 254-1110

CURRENT SPECIFICATION REVISIONS

6 X 6 GETRNS ALUMINUM ENCLOSURE

91000336 A
GETBR

Date Sent to Customer: 9/14/2015
Sent Via: EMAIL
Customer Approval Date:

	Changes	Spec Page Chgd	Start Rev	Chgs Made By	Date Chgs Made	End Rev
A	1. REVISED WALL MATERIAL.	2		DAV	9/14/2015	A

PTMW Inc.

OEM METAL ENCLOSURE & FABRICATION

THIS DRAWING IS SOLE PROPERTY OF PTMW AND IS PROTECTED UNDER ALL APPLICABLE COPYRIGHT LAWS. THIS DESIGN IS PROPRIETARY TO PTMW AND IS PROVIDED ON A CONFIDENTIAL BASIS FOR USE RELATED TO PTMW'S BUSINESS. THIS DRAWING MAY NOT BE REPRODUCED AND THE DESIGN MAY NOT BE DUPLICATED WITHOUT THE WRITTEN PERMISSION OF PTMW. WE RESERVE THE RIGHT TO MODIFY THIS DESIGN. THIS DRAWING IS LOANED SUBJECT TO RETURN ON DEMAND.

6 X 6 GETRNS ALUMINUM ENCLOSURE

91000336 A COVER PAGE

6 X 6 GETRNS ALUMINUM ENCLOSURE

SHEET	DESCRIPTION
1 OF 14	COVER PAGE AND REVISION HISTORY
2 OF 14	GENERAL NOTES OF MATERIALS AND PROCEDURES
3 OF 14	GENERAL NOTES OF MATERIALS AND PROCEDURES
4 OF 14	EXTERIOR VIEW OF D WALL
5 OF 14	EXTERIOR VIEW OF A WALL
6 OF 14	EXTERIOR VIEW OF B WALL
7 OF 14	EXTERIOR VIEW OF C WALL
8 OF 14	PLAN VIEW OF ENCLOSURE
9 OF 14	INTERIOR VIEW OF D WALL
10 OF 14	INTERIOR VIEW OF A WALL
11 OF 14	INTERIOR VIEW OF B WALL
12 OF 14	INTERIOR VIEW OF C WALL
13 OF 14	FARADAY/TERMINAL BOARD LAYOUT
14 OF 14	ELECTRICAL SCHEMATIC

PTMW, INC. CANNOT PROCEED WITH PRODUCTION OF THIS PROJECT UNTIL A SIGNED COPY OF THIS SHEET IS RETURNED. ☐ APPROVED ☐ DENIED

APPROVED BY: _____

COMPANY: _____

PRINT NAME: _____

DATE: _____

DATE	REV	SHEET	DESCRIPTION	DRAWN
9 /14/15	A	2	1. REVISED WALL MATERIAL.	DAV
1 /23/12		ALL	ORIGINAL RELEASE	SES

DIMENSIONAL TOLERANCES UNLESS NOTED
X.0 = +/-1 0.X=+/-.13 0.XX=+/-.063
0.XXX=+/-.031 ANGULAR +/-3 DEG

PTMW, Inc.
OEM METAL ENCLOSURE & FABRICATION

THIS DRAWING IS SOLE PROPERTY OF PTMW AND IS PROTECTED UNDER ALL APPLICABLE COPYRIGHT LAWS. THIS DESIGN IS PROPRIETARY TO PTMW AND IS PROVIDED ON A CONFIDENTIAL BASIS FOR USE RELATED TO PTMW'S BUSINESS. THIS DRAWING MAY NOT BE REPRODUCED AND THE DESIGN MAY NOT BE DUPLICATED WITHOUT THE WRITTEN PERMISSION OF PTMW. WE RESERVE THE RIGHT TO MODIFY THIS DESIGN. THIS DRAWING IS LOANED SUBJECT TO RETURN ON DEMAND.

6 X 6 GETRNS ALUMINUM ENCLOSURE

910003367 SHEET 1 OF 14

GENERAL NOTES OF MATERIALS AND PROCEDURES

EXTERIOR FEATURES

S1 FLOOR

.125 mill finish aluminum (3003H14, AMSQQ-A-250/2, ASTM B209).

S2 WALL

.090 aluminum (3003H14, AMSQQ-A-250/2, ASTM B209) with PVC peel coat to protect exterior surface during manufacturing (peel coat removed prior to shipping to customer).

S3 DOORS

.090 aluminum (3003H14, AMSQQ-A-250/2, ASTM B209) with PVC peel coat to protect exterior surface during manufacturing (peel coat removed prior to shipping to customer).

S4 ROOF

.090 aluminum (3003H14, AMSQQ-A-250/2, ASTM B209) with PVC peel coat to protect exterior surface during manufacturing (peel coat removed prior to shipping to customer).

S5 Enclosure equipped with inner wall type foundations constructed of galvanized steel minimum 60" long with 12" square footing plate and adjustable from 36" to 52" in 1-1/2" increments.

S6 All seams caulked with gray 50 year RTV silicone.

S7 Manufacturer's name plate with serial number located outside near front door.

S8 Aerial cable entries provided.

S9 Enclosure equipped with 3/8" X 6" X 10" aluminum (6061) lifting lugs.

S10 Four grounding pigtail(s) #6 48" long solid copper welded to the underneath side of floor.

DOORS

D1 One 28" X 82" door(s) with opening 26" X 80": R value = 10:

A. Vandal resistant bolt on stainless steel hinges with grease fittings and stainless steel pins.

B. Heavy duty three point locking system with interior safety override handle and exterior handle with 1/2" diameter padlock hole.

C. Door constructed of exterior and interior metal skin with 2" of rigid insulation between.

D. Zinc plated prop rod(s) to hold door open at 90 degrees and 160 degrees, +/- 5 degrees.

E. EPDM extruded rubber gasket(s) providing a weather tight seal.

D2 One 40" X 87" door(s) with opening 38" X 85": R value = 10:

A. Vandal resistant bolt on stainless steel hinges with grease fittings and stainless steel pins.

B. Heavy duty three point locking system with interior safety override handle and exterior handle with 1/2" diameter padlock hole.

C. Door constructed of exterior and interior metal skin with 2" of rigid insulation between.

D. Zinc plated prop rod(s) to hold door open at 90 degrees and 160 degrees, +/- 5 degrees.

E. EPDM extruded rubber gasket(s) providing a weather tight seal.

INTERIOR FEATURES

W1 FLOOR R value = 4.5:

A. Floor channels skip welded 1-1/2" every 18".

B. Floor covered with 1/2" rigid insulation and 3/4" fiberglass reinforced polyurethane composite fiberboard with anti-skid textured finish and rated at 24,000 volts AC dielectric strength.

C. One access for power entry(ies).

D. One provision(s) for 2" connector(s) with shipping cover plate(s).

E. Six 4-5/8" diameter cable entry(ies) provided with shipping cover(s).

W2 D WALL R value = 8:

A. Wall panels are plug welded every 18" and skip welded to the floor.

B. 1-3/8" rigid insulation covered with 3/4" class C white laminated wood between keyways; made in the USA.

W3 A WALL R value = 8:

A. Wall panels are plug welded every 18" and skip welded to the floor.

B. 1-3/8" rigid insulation covered with 3/4" class C white laminated wood between keyways; made in the USA.

C. 3" X 3" panduit (G3X3LG6) with cover (C3LG6) and one wire tie per foot of panduit.

D. Two 11-3/4" depth shelf(ves) constructed of 3/4" black HDPE laminated plywood and front edge finished with black PVC shelf trim.

W4 B WALL R value = 8:

A. Wall panels are plug welded every 18" and skip welded to the floor.

B. 1-3/8" rigid insulation covered with 3/4" class C white laminated wood between keyways; made in the USA.

W5 C WALL R value = 8:

A. Wall panels are plug welded every 18" and skip welded to the floor.

B. 1-3/8" rigid insulation covered with 3/4" class C white laminated wood between keyways; made in the USA.

C. 3" X 3" panduit (G3X3LG6) with cover (C3LG6) and one wire tie per foot of panduit.

D. Two 11-3/4" depth shelf(ves) constructed of 3/4" black HDPE laminated plywood and front edge finished with black PVC shelf trim.

W6 CEILING R value = 11:

A. 2" rigid insulation covered with 1/2" class C white laminated wood below trusses; made in the USA.

PTMW, Inc.
OEM METAL ENCLOSURE & FABRICATION

THIS DRAWING IS SOLE PROPERTY OF PTMW AND IS PROTECTED UNDER ALL APPLICABLE COPYRIGHT LAWS. THIS DESIGN IS PROPRIETARY TO PTMW AND IS PROVIDED ON A CONFIDENTIAL BASIS FOR USE RELATED TO PTMW'S BUSINESS. THIS DRAWING MAY NOT BE REPRODUCED AND THE DESIGN MAY NOT BE DUPLICATED WITHOUT THE WRITTEN PERMISSION OF PTMW. WE RESERVE THE RIGHT TO MODIFY THIS DESIGN. THIS DRAWING IS LOANED SUBJECT TO RETURN ON DEMAND.

6 X 6 GETRNS ALUMINUM ENCLOSURE

GENERAL NOTES OF MATERIALS AND PROCEDURES

W7 TERMINAL BOARD(S): One 36" X 84" consisting of the following:

A. 3/4" 2-sided class C white laminated plywood mounted in a frame constructed of .125 mill finish aluminum (3003H14, AMSQQ-A-250/2, ASTM B209).

B. Three relay mounting bar(s) and two ladder bar(s) for securing cables.

C. One perimeter grounding kit (Erico #B2700GK36X84).

W8 All shelf brackets and other miscellaneous hardware items finished with white polyester powder coat or zinc plated.

W9 Wire chase is an open ladder style, modular e-track aluminum assembly with molded plastic wire guides.

HVAC

V1 Intake and exhaust vents located at gable ends of roof with moisture resistant polyester fiber, snap in filters including back flow dampers.

V2 One 115 volt, 60 hertz, 273 CFM, .77 FLA centrifugal ventilation fan(s) (Grainger #1TDR3).

V3 One Dayton 30-110° F thermostat(s) (Grainger #1UHH4, 1UHH2 or equivalent).

V4 One 2000 watt 220 volt 60 Hz 6824 Btu thermostatically controlled heater(s).

ELECTRICAL

All supplied electrical components to be UL listed. All power circuits to be run in conduit and secured to enclosure structure. Electrical system to include the following items installed by manufacturer:

E1 One 125 amp 16 space main lug load center(s) (Square D #QO116L125G).

E2 One 100 amp 2 pole breaker(s) (Square D #QO2100).

E3 Two 30 amp 2 pole breaker(s) (Square D #QO230).

E4 Two 20 amp 2 pole breaker(s) (Square D #QO220).

E5 One 20 amp 1 pole GFI breaker(s) (Square D #QO120GFI).

E6 Two 15 amp 1 pole breaker(s) (Square D #QO115).

E7 One 15 amp 1 pole GFI breaker(s) (Square D #QO115GFI).

E8 One back fed main breaker retaining kit(s) (Square D #PK4DTIM4LA).

E9 Four 15 amp 250 volt 2P/3W twist lock duplex receptacle(s) (NEMA L6-15R).

E10 Two 20 amp duplex receptacle(s).

E11 One 30 amp 125/250 volt 3P/4W NEMA L14-30P generator receptacle(s)with WP/WR box and cover (Hubbell #HBL2715M3).

E12 One 15 amp light switch(es).

E13 One 4' rapid start fluorescent light fixture(s) with T-8 lamps, shatter guards and tube locks.

E14 One 12" X 12" X 6" junction box(es) with cover.

E15 2" EMT conduit for power entry.

E16 Two #6 copper grounding pigtail(s) welded to the enclosure.

SHIP LOOSE ITEMS

The following items will be shipped loose with enclosures:

L1 Twenty-four feet of 2" X 3" panduit (G2X3LG6) with cover (C2LG6) and one wire tie and hardware per foot of panduit.

L2 Two wire chase dropout(s).

L3 One 2" compression connector(s).

L4 One 2" plastic bushing(s).

L5 One 8-5/8" X 35-7/8" 2-sided class C white laminated plywood board(s) for terminal board(s) with mounting hardware.

L6 One power off light(s) (Gems #IL-LC3) with gasket(s), mounting plate(s) and hardware.

L7 One 36" length of 2" liquid tight conduit with one 2" NPT coupling, one 2" EMT compression connector, one 2" straight connector and one 2" plastic protective cap.

L8 Four 24" length(s) of 4" SCH 40 PVC conduit with adaptors, lockrings and plastic bushings.

PTMW, Inc.
OEM METAL ENCLOSURE & FABRICATION

THIS DRAWING IS SOLE PROPERTY OF PTMW AND IS PROTECTED UNDER ALL APPLICABLE COPYRIGHT LAWS. THIS DESIGN IS PROPRIETARY TO PTMW AND IS PROVIDED ON A CONFIDENTIAL BASIS FOR USE RELATED TO PTMW'S BUSINESS. THIS DRAWING MAY NOT BE REPRODUCED AND THE DESIGN MAY NOT BE DUPLICATED WITHOUT THE WRITTEN PERMISSION OF PTMW. WE RESERVE THE RIGHT TO MODIFY THIS DESIGN. THIS DRAWING IS LOANED SUBJECT TO RETURN ON DEMAND.

6 X 6 GETRNS ALUMINUM ENCLOSURE

91000336 SHEET 3 OF 14

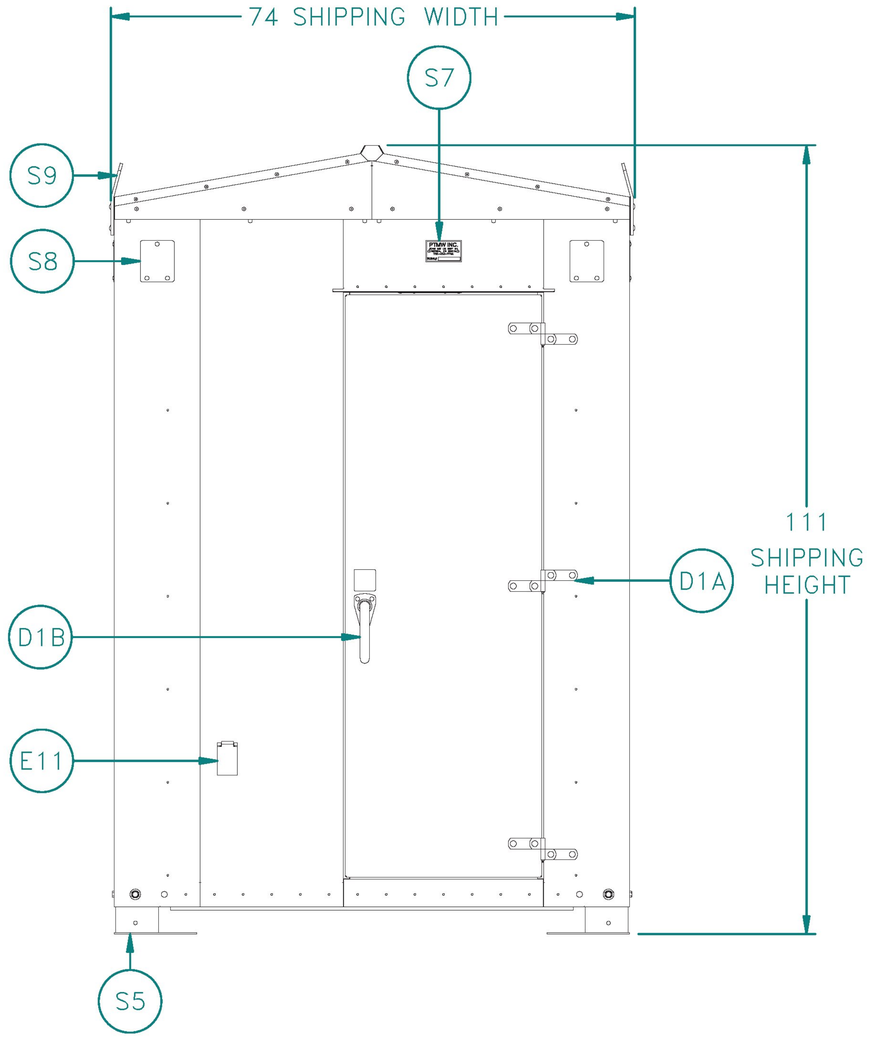

EXTERIOR VIEW OF D WALL

PTMW, Inc.
O.E.M. METAL ENCLOSURES & FABRICATION

THIS DRAWING IS SOLE PROPERTY OF PTMW AND IS PROTECTED UNDER ALL COPYRIGHT LAWS. THIS DESIGN IS PROPERTY OF PTMW AND IS PROVIDED ON A CONFIDENTIAL BASIS FOR USE RELATED TO PTMW'S BUSINESS. THIS DRAWING MAY NOT BE REPRODUCED AND THE DESIGN MAY NOT BE DUPLICATED WITHOUT THE WRITTEN PERMISSION OF PTMW. WE RESERVE THE RIGHT TO MODIFY THIS DESIGN. THIS DRAWING IS LOANED SUBJECT TO RETURN ON DEMAND.

6 X 6 GETRNS ALUMINUM ENCLOSURE

91000336 A

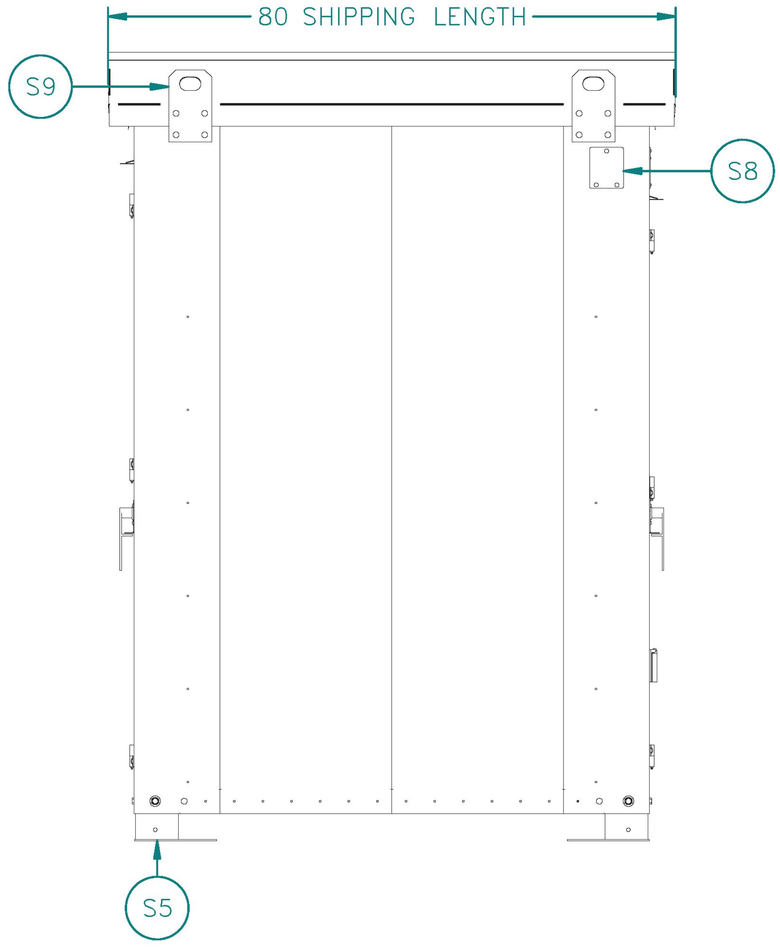

EXTERIOR VIEW OF A WALL

PTMW, Inc.
O.E.M. METAL ENCLOSURES & FABRICATION

THIS DRAWING IS SOLE PROPERTY OF PTMW AND IS PROTECTED UNDER ALL COPYRIGHT LAWS. THIS DESIGN IS PROPERTY OF PTMW AND IS PROVIDED ON A CONFIDENTIAL BASIS FOR USE RELATED TO PTMW'S BUSINESS. THIS DRAWING MAY NOT BE REPRODUCED AND THE DESIGN MAY NOT BE DUPLICATED WITHOUT THE WRITTEN PERMISSION OF PTMW. WE RESERVE THE RIGHT TO MODIFY THIS DESIGN. THIS DRAWING IS LOANED SUBJECT TO RETURN ON DEMAND.

6 X 6 GETRNS ALUMINUM ENCLOSURE

91000336 A

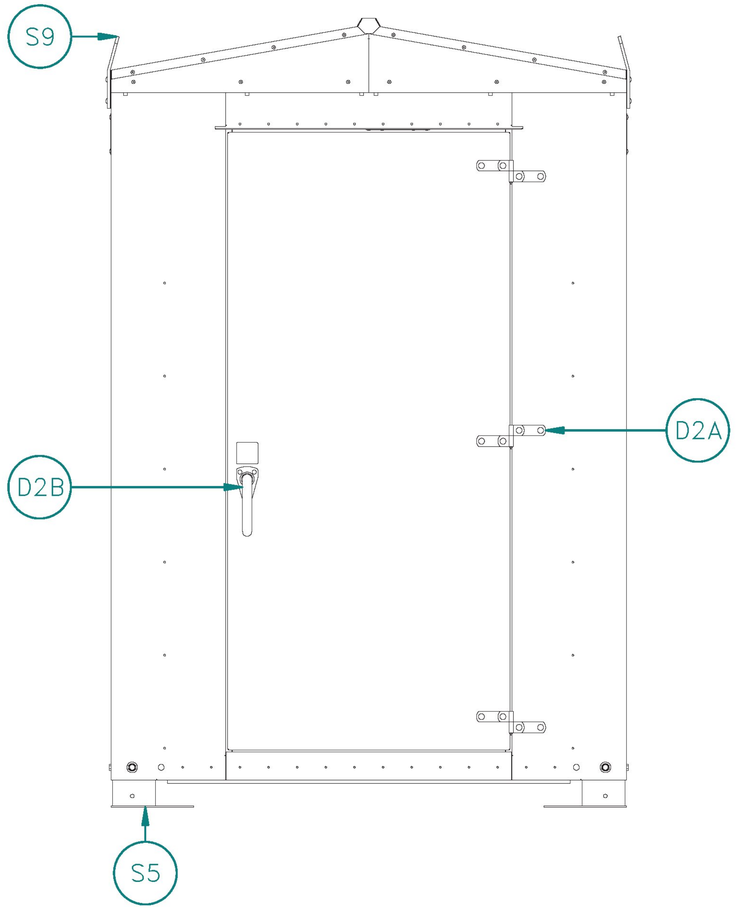

EXTERIOR VIEW OF B WALL

PTMW, Inc.
O.E.M. METAL ENCLOSURES & FABRICATION

THIS DRAWING IS SOLE PROPERTY OF PTMW AND IS PROTECTED UNDER ALL COPYRIGHT LAWS. THIS DESIGN IS PROPERTY OF PTMW AND IS PROVIDED ON A CONFIDENTIAL BASIS FOR USE RELATED TO PTMW'S BUSINESS. THIS DRAWING MAY NOT BE REPRODUCED AND THE DESIGN MAY NOT BE DUPLICATED WITHOUT THE WRITTEN PERMISSION OF PTMW. WE RESERVE THE RIGHT TO MODIFY THIS DESIGN. THIS DRAWING IS LOANED SUBJECT TO RETURN ON DEMAND.

6 X 6 GETRNS ALUMINUM ENCLOSURE

91000336 A SHEET 6 OF 14

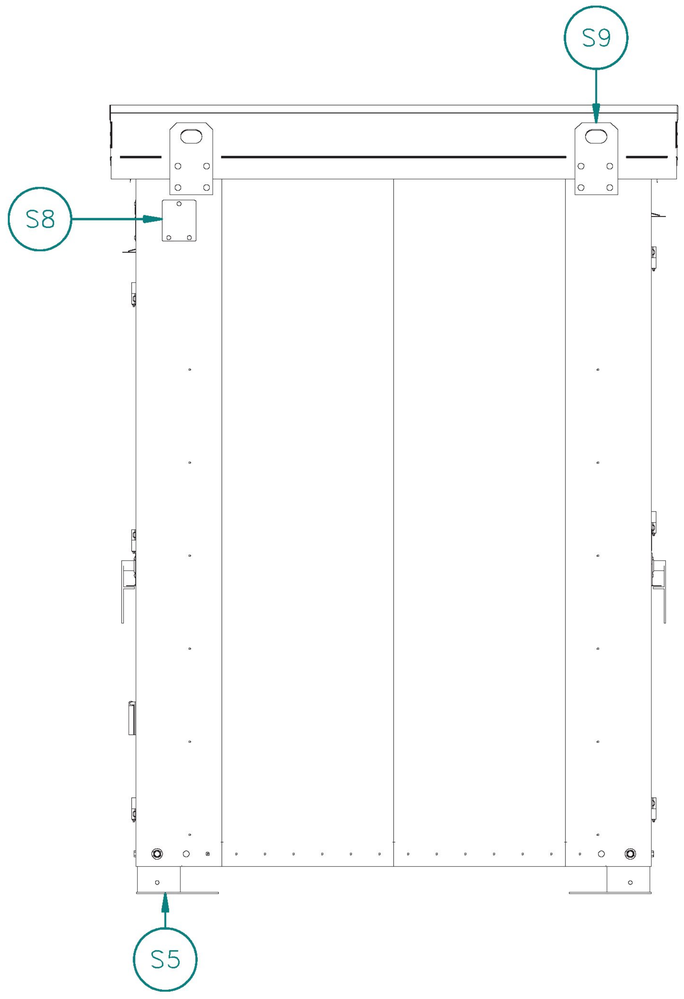

EXTERIOR VIEW OF C WALL

PTMW, Inc.
O.E.M. METAL ENCLOSURES & FABRICATION

THIS DRAWING IS SOLE PROPERTY OF PTMW AND IS PROTECTED UNDER ALL COPYRIGHT LAWS. THIS DESIGN IS PROPERTY OF PTMW AND IS PROVIDED ON A CONFIDENTIAL BASIS FOR USE RELATED TO PTMW'S BUSINESS. THIS DRAWING MAY NOT BE REPRODUCED AND THE DESIGN MAY NOT BE DUPLICATED WITHOUT THE WRITTEN PERMISSION OF PTMW. WE RESERVE THE RIGHT TO MODIFY THIS DESIGN. THIS DRAWING IS LOANED SUBJECT TO RETURN ON DEMAND.

6 X 6 GETRNS ALUMINUM ENCLOSURE

91000336 A

B WALL

A WALL

C WALL

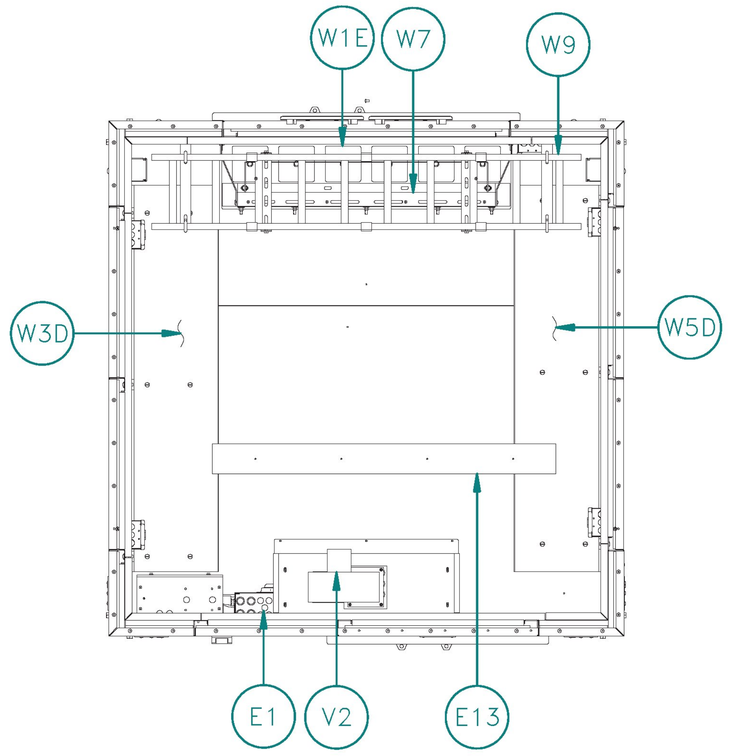

D WALL

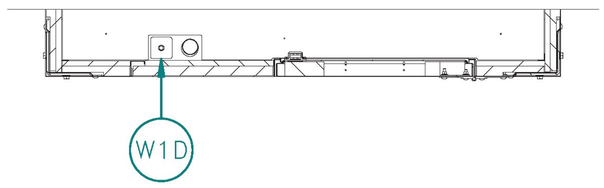

PLAN VIEW OF ENCLOSURE

PTMW, Inc.
O.E.M. METAL ENCLOSURES & FABRICATION

THIS DRAWING IS SOLE PROPERTY OF PTMW AND IS PROTECTED UNDER ALL COPYRIGHT LAWS. THIS DESIGN IS PROPERTY OF PTMW AND IS PROVIDED ON A CONFIDENTIAL BASIS FOR USE RELATED TO PTMW'S BUSINESS. THIS DRAWING MAY NOT BE REPRODUCED AND THE DESIGN MAY NOT BE DUPLICATED WITHOUT THE WRITTEN PERMISSION OF PTMW. WE RESERVE THE RIGHT TO MODIFY THIS DESIGN. THIS DRAWING IS LOANED SUBJECT TO RETURN ON DEMAND.

6 X 6 GETRNS ALUMINUM ENCLOSURE

91000336 A

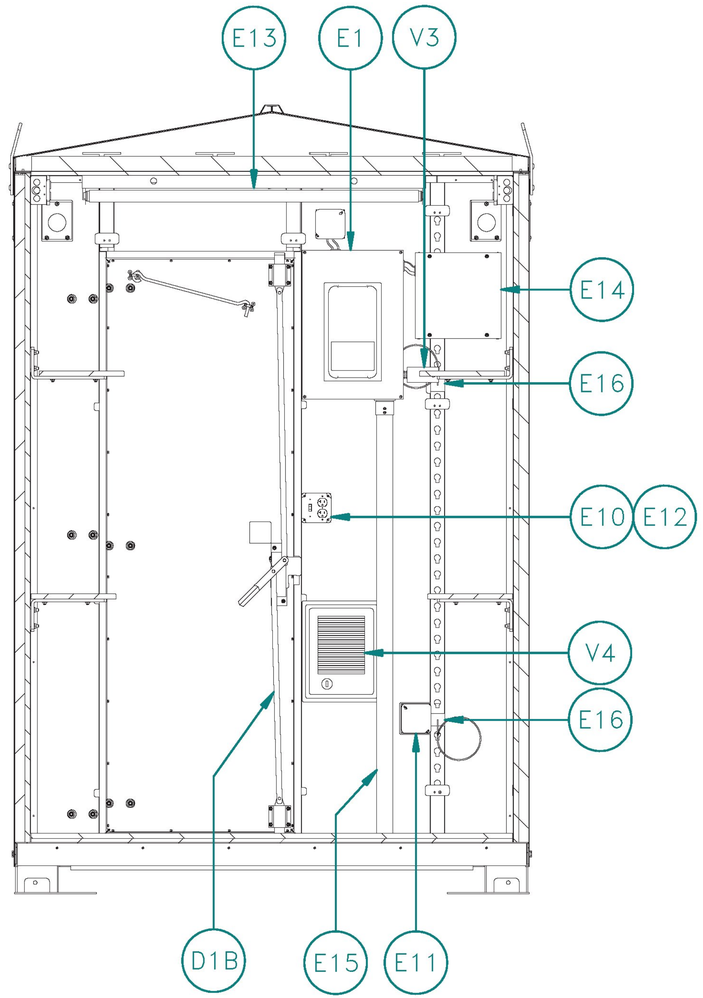

INTERIOR VIEW OF D WALL

PTMW, Inc.
O.E.M. METAL ENCLOSURES & FABRICATION

THIS DRAWING IS SOLE PROPERTY OF PTMW AND IS PROTECTED UNDER ALL COPYRIGHT LAWS. THIS DESIGN IS PROPERTY OF PTMW AND IS PROVIDED ON A CONFIDENTIAL BASIS FOR USE RELATED TO PTMW'S BUSINESS. THIS DRAWING MAY NOT BE REPRODUCED AND THE DESIGN MAY NOT BE DUPLICATED WITHOUT THE WRITTEN PERMISSION OF PTMW. WE RESERVE THE RIGHT TO MODIFY THIS DESIGN. THIS DRAWING IS LOANED SUBJECT TO RETURN ON DEMAND.

6 X 6 GETRNS ALUMINUM ENCLOSURE

91000336 A

SHEET 9 OF 14

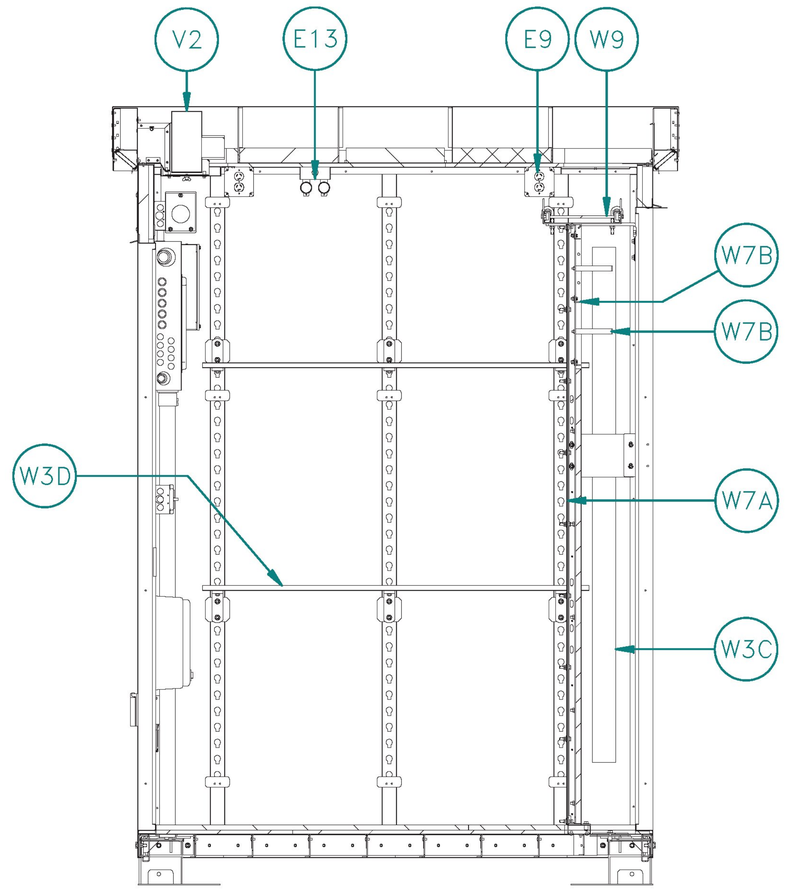

INTERIOR VIEW OF A WALL

PTMW, Inc.
O.E.M. METAL ENCLOSURES & FABRICATION

THIS DRAWING IS SOLE PROPERTY OF PTMW AND IS PROTECTED UNDER ALL COPYRIGHT LAWS. THIS DESIGN IS PROPERTY OF PTMW AND IS PROVIDED ON A CONFIDENTIAL BASIS FOR USE RELATED TO PTMW'S BUSINESS. THIS DRAWING MAY NOT BE REPRODUCED AND THE DESIGN MAY NOT BE DUPLICATED WITHOUT THE WRITTEN PERMISSION OF PTMW. WE RESERVE THE RIGHT TO MODIFY THIS DESIGN. THIS DRAWING IS LOANED SUBJECT TO RETURN ON DEMAND.

6 X 6 GETRNS ALUMINUM ENCLOSURE

91000336 A

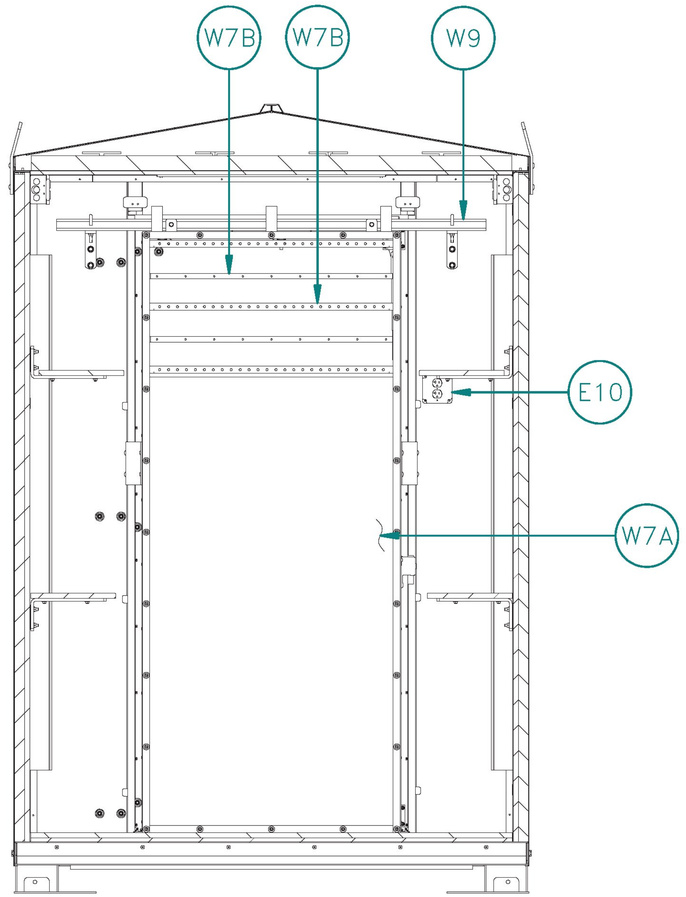

INTERIOR VIEW OF B WALL

PTMW, Inc.
O.E.M. METAL ENCLOSURES & FABRICATION

THIS DRAWING IS SOLE PROPERTY OF PTMW AND IS PROTECTED UNDER ALL COPYRIGHT LAWS. THIS DESIGN IS PROPERTY OF PTMW AND IS PROVIDED ON A CONFIDENTIAL BASIS FOR USE RELATED TO PTMW'S BUSINESS. THIS DRAWING MAY NOT BE REPRODUCED AND THE DESIGN MAY NOT BE DUPLICATED WITHOUT THE WRITTEN PERMISSION OF PTMW. WE RESERVE THE RIGHT TO MODIFY THIS DESIGN. THIS DRAWING IS LOANED SUBJECT TO RETURN ON DEMAND.

6 X 6 GETRNS ALUMINUM ENCLOSURE

91000336 A SHEET 11 OF 14

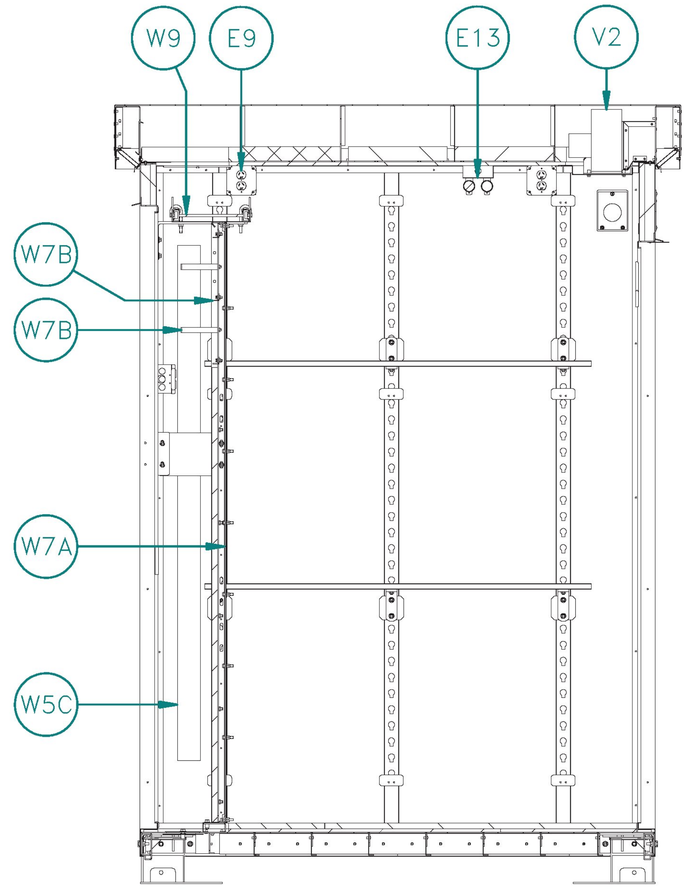

INTERIOR VIEW OF C WALL

PTMW, Inc.
O.E.M. METAL ENCLOSURES & FABRICATION

THIS DRAWING IS SOLE PROPERTY OF PTMW AND IS PROTECTED UNDER ALL COPYRIGHT LAWS. THIS DESIGN IS PROPERTY OF PTMW AND IS PROVIDED ON A CONFIDENTIAL BASIS FOR USE RELATED TO PTMW'S BUSINESS. THIS DRAWING MAY NOT BE REPRODUCED AND THE DESIGN MAY NOT BE DUPLICATED WITHOUT THE WRITTEN PERMISSION OF PTMW. WE RESERVE THE RIGHT TO MODIFY THIS DESIGN. THIS DRAWING IS LOANED SUBJECT TO RETURN ON DEMAND.

6 X 6 GETRNS ALUMINUM ENCLOSURE

91000336 A SHEET 12 OF 14

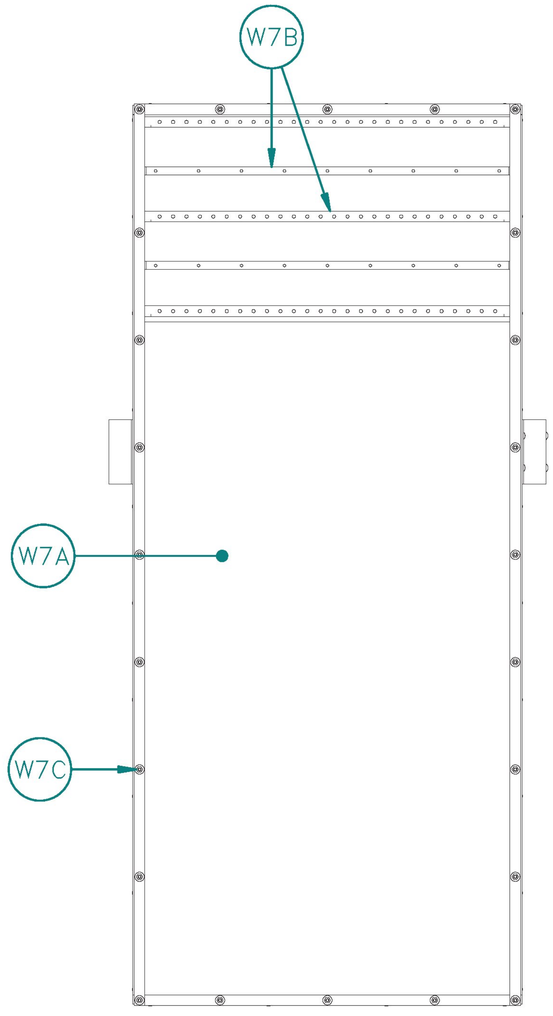

PTMW, Inc.
O.E.M. METAL ENCLOSURES & FABRICATION

THIS DRAWING IS SOLE PROPERTY OF PTMW AND IS PROTECTED UNDER ALL COPYRIGHT LAWS. THIS DESIGN IS PROPERTY OF PTMW AND IS PROVIDED ON A CONFIDENTIAL BASIS FOR USE RELATED TO PTMW'S BUSINESS. THIS DRAWING MAY NOT BE REPRODUCED AND THE DESIGN MAY NOT BE DUPLICATED WITHOUT THE WRITTEN PERMISSION OF PTMW. WE RESERVE THE RIGHT TO MODIFY THIS DESIGN. THIS DRAWING IS LOANED SUBJECT TO RETURN ON DEMAND.

6 X 6 GETRNS ALUMINUM ENCLOSURE

91000336 A SHEET 13 OF 14

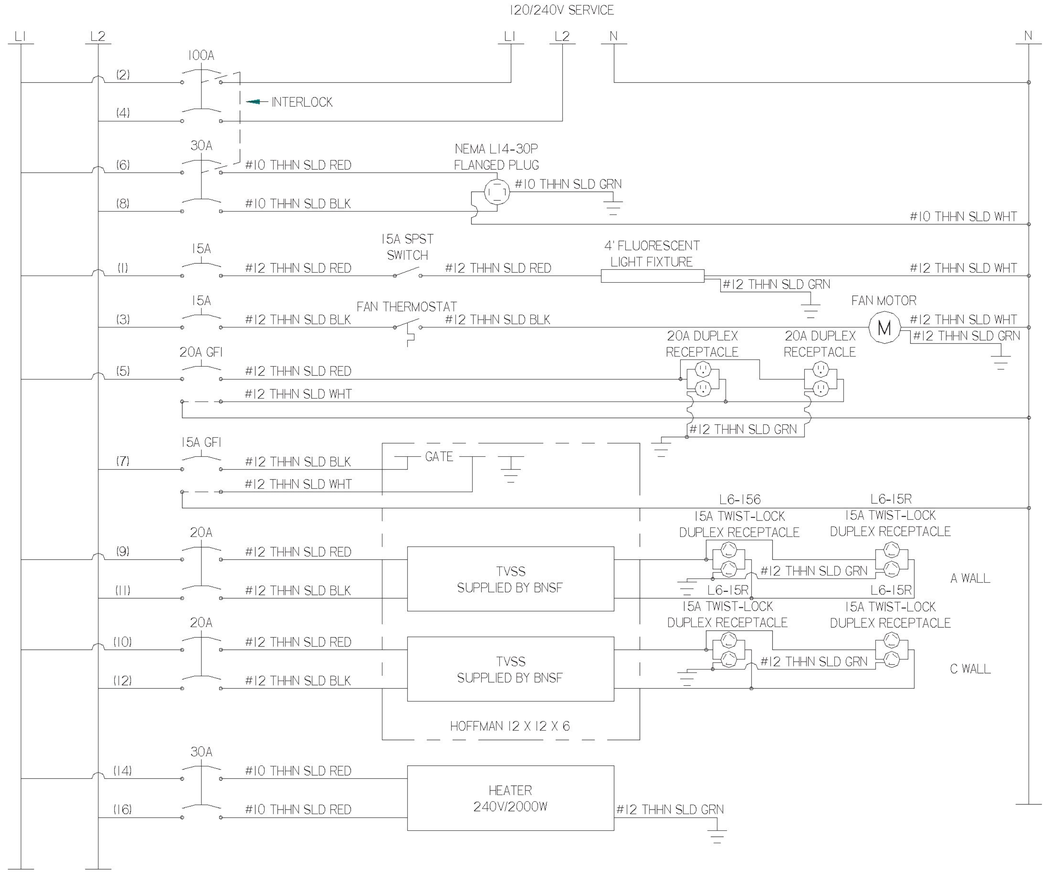

ELECTRICAL SCHEMATIC

BREAKER LAYOUT
QO116L125G

LIGHTS	1	15A	100A	2	INTERLOCK	MAIN BREAKER
FAN	3	15A		4		
B&D WALL RECEPTACLES	5	20A GFI	30A	6		GENERATOR PLUG
GATE	7	15A GFI		8		
A WALL 220V RECEPTACLES	9	20A	20A	10		C WALL 220V RECEPTACLES
	11			12		
NOT USED	13		30A	14		2000W HEATER
NOT USED	15			16		

PTMW, Inc.
O.E.M. METAL ENCLOSURES & FABRICATION

THIS DRAWING IS SOLE PROPERTY OF PTMW AND IS PROTECTED UNDER ALL COPYRIGHT LAWS. THIS DESIGN IS PROPERTY OF PTMW AND IS PROVIDED ON A CONFIDENTIAL BASIS FOR USE RELATED TO PTMW'S BUSINESS. THIS DRAWING MAY NOT BE REPRODUCED AND THE DESIGN MAY NOT BE DUPLICATED WITHOUT THE WRITTEN PERMISSION OF PTMW. WE RESERVE THE RIGHT TO MODIFY THIS DESIGN. THIS DRAWING IS LOANED SUBJECT TO RETURN ON DEMAND.

6 X 6 GETRNS ALUMINUM ENCLOSURE

91000336 A SHEET 14 OF 14

Product data sheet
Characteristics

QO124L125G
LOAD Center QO MLO 240V 125A 1PH 24SP

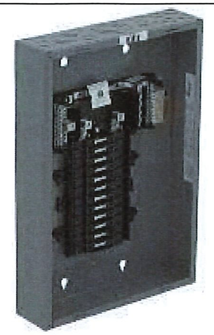

Main

Product or component type	Load Center
Range of product	QO
Load center type	Main lugs
Line Rated Current	125 A
Number of spaces	24
Short-circuit current	65 kA
Number of circuits	24
Number of tandem circuit breakers	0
Phase	1 phase
System Voltage	120/240 V AC

Complementary

AWG gauge	AWG 6...AWG 2/0 (aluminium/copper)
NEMA degree of protection	NEMA 1 indoor
Cover type	Order separately
Electrical connection	Lugs
Device composition	Grounding bar included (not installed)
Electrical connection	Lugs
Wiring configuration	3-wire
Material	Tin plated copper busbar
Enclosure material	Welded sheet steel
Surface finish	Baked enamel grey
Box number	7
Product certifications	UL listed
Height	531 mm
Width	14.25 in (362 mm)

Disclaimer: This documentation is not intended as a substitute for and is not to be used for determining suitability or reliability of these products for specific user applications

Offer Sustainability

Sustainable offer status	Not Green Premium product
RoHS (date code: YYWW)	Compliant - since 1248 - Schneider Electric declaration of conformity Schneider Electric declaration of conformity
REACh	Reference not containing SVHC above the threshold Reference not containing SVHC above the threshold
Product end of life instructions	Need no specific recycling operations

Contractual warranty

Warranty period	18 months

GE PROPRIETARY INFORMATION

THE INFORMATION CONTAINED IN THIS DOCUMENT IS GE PROPRIETARY INFORMATION AND IS DISCLOSED IN CONFIDENCE. IT IS THE PROPERTY OF GE AND SHALL NOT BE USED, DISCLOSED TO OTHERS OR REPRODUCED WITHOUT THE EXPRESS WRITTEN CONSENT OF GE, INCLUDING, BUT WITHOUT LIMITATION, IT IS NOT TO BE USED IN THE CREATION, MANUFACTURE, DEVELOPMENT, OR DERIVATION OF ANY REPAIRS, MODIFICATIONS, SPARE PARTS, DESIGNS, OR CONFIGURATION CHANGES OR TO OBTAIN ANY GOVERNMENT OR REGULATORY APPROVAL. IF CONSENT IS GIVEN FOR REPRODUCTION IN WHOLE OR IN PART, THIS NOTICE AND THE NOTICE SET FORTH ON EACH PAGE OF THIS DOCUMENT SHALL APPEAR IN ANY SUCH REPRODUCTION IN WHOLE OR IN PART. EXPORT CONTROL LAWS OF THE UNITED STATES MAY ALSO CONTROL THE INFORMATION AND/OR MATERIALS CONTAINED HEREIN. UNAUTHORIZED EXPORT OR RE-EXPORT IS PROHIBITED.

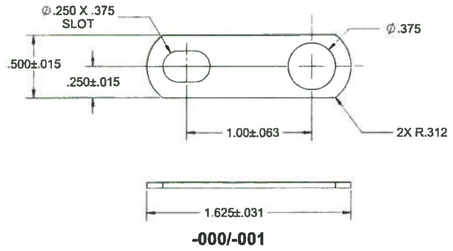

-000/-001

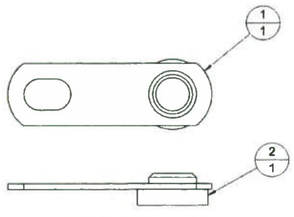

-002
(WITH INSULATOR)

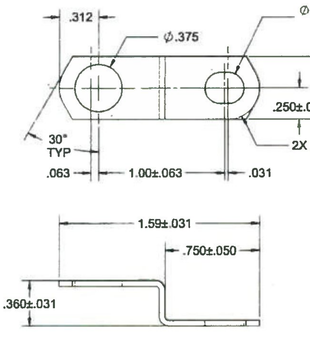

-003/-004

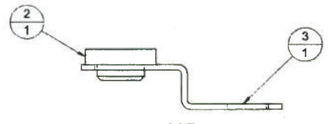

-005
(WITH INSULATOR)

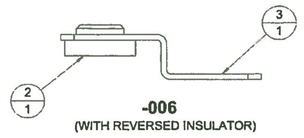

-006
(WITH REVERSED INSULATOR)

NOTES:

1. DEBURR AND REMOVE ALL SHARP EDGES.
2. MATERIAL : REFER MATERIAL SPECIFICATION AS NOTED IN 036060-676.
3. FINISH : ELECTROLESS NICKEL PLATING .0003" MINIMUM THK. PER MIL-C-26074.

CONFIGURATION TABLE

SR. NO.	PART NO.	DESCRIPTION	ITEM
1	032257-000	TEST LINK 1" CTR FLT MACH PLN	-
2	032257-001	TEST LINK 1" CTR FLT PLATED	1
3	033050-001	INSULATOR AAR TEST LINK	-
4	032257-002	TEST LINK W/PLT & INSUL	2
5	032257-003	TEST LINK 1" OFFSET MACH PLAIN	-
6	032257-004	TEST LINK 1" OFFSET PLATED	3
7	032257-005	TEST LINK 1" OFFSET W/PLT/INSU	-
8	032257-006	TEST LINK 1"OFFSET W/INSUL MOD	-

UNLESS OTHERWISE SPECIFIED DIMENSIONS ARE IN INCHES AND MILLIMETERS ARE IN [ ].

TOLERANCES

.XX ± .015 FRACTIONS ± NA
.XXX ± .005 ANGLES ± NA

REV	CHANGE NO.	DATE	BY
HC0	90109794	12/16/09	SZ

ENGINEER	BRANDI WOOD	DATE 12/09
DRAWN BY	S ZUBAIR	DATE 12/16/09
ENGINEER APPROVAL	BRANDI WOOD	
CRITICAL TO QUALITY CHARACTERISTICS ARE MARKED AS		
MIN / MOD LEVEL:		
PRODUCT:		

GE TRANSPORTATION SYSTEMS
GLOBAL SIGNALING
ERIE, PA 16531 U.S.A.

TITLE
TEST LINK INSULATED FLAT AND OFFSET

SIZE	SCALE	DRAWING NO.	SHEET	REV.
C	2:1	032257-XXX	1 OF 1	HC0

NEW PRODUCTS

SECTION G-1

(See Enclosed For Further Information)

GATE KEEPERS

GSI CATALOG NO.	DESCRIPTION
SK-1000-C	Standard mast mounted gate keeper
SK-1000-REV	Reversible mast mounted gate keeper (For island gates or left side of a one-way street)
SK-1001	Standard pedestal mounted gate keeper
SK-1001-REV	Reversible pedestal mounted gate keeper (For island gates or left side of a one-way street)
SK-1000-B	B model mast mounted gate keeper
SK-1000-REVB	Reversible B model mast mounted gate keeper
SK-1000-2W	Standard mast mounted gate keeper designed to be installed on either side of the road

GATE ARMS

GSI CATALOG NO.	DESCRIPTION
SG-18 FT.	18 ft. aluminum gate arm (standard base section)
SG-1924 FT.	Adjustable 19-24 ft. aluminum/polyglas gate arm
SG-1932 FT.	Adjustable 19-32 ft. aluminum/polyglas gate arm
SG-3340 FT.	Adjustable 33-40 ft. aluminum/polyglas gate arm
SG-8FT-EXT	8 ft. polyglas second section
SG-16FT-EXT	16 ft. polyglas second section
SG-TIP SECTION-F	10 ft. fiberglass tip section
W-RXB-5	Cross buck mounting hardware

GSI
GENERAL SIGNALS, INC.

Transportation Signal Lenses and Accessories

SIMPLY THE BEST GATE KEEPER IN THE WORLD

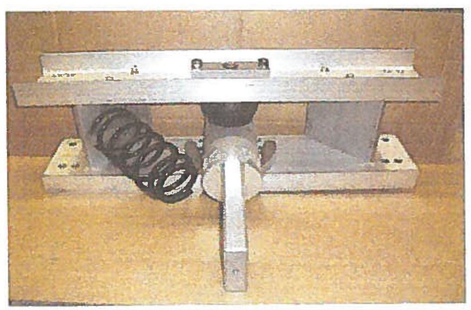

GSI PART #SK-1000-C GATE KEEPER

- Over 27,000 now in operation throughout North America
- Good for gates up to 40 ft.
- All aluminum and stainless – will not corrode even after years of exposure to inclement weather
- Only 75 pounds
- Bumper spring standard to insure proper and swift return of gate arm
- 1 inch 17-4 stainless heavy duty center shaft
- Totally enclosed block teflon bearings
- Recesses back away from road allowing for complete road clearance

THE SECOND BEST GATE KEEPER IN THE WORLD

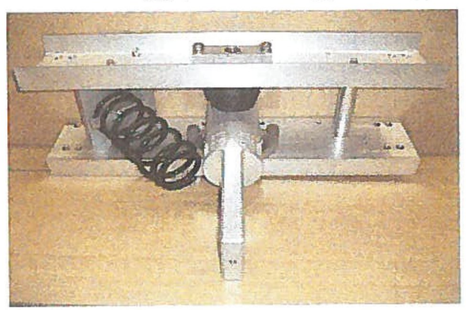

GSI PART #SK-1000-B GATE KEEPER

- Offers significant savings over originial GSI model
- Good for gates up to 40 ft.
- All aluminum and stainless – will not corrode even after years of exposure to inclement weather
- Only 70 pounds
- Bumper spring standard to ensure proper and swift return of gate arm
- 1 inch 17-4 stainless heavy duty center shaft
- Top block teflon bearing: bottom bearing housed within riser plate
- Side bar instead of square support plate on traffic side
- Recesses back away from road allowing for complete road clearance

Both General Signals model Gate Keepers are available in the reverse version, (for island gates on left side of a one way street) also.

General Signals Gate Keeper is The Original, The Proven, and The Best

5611 Morgan Avenue
Evansville, Indiana 47715

www.generalsignals.com
gsi5611@generalsignals.com

(812) 474-4256
Fax (812) 474-4258

GSI
GENERAL SIGNALS, INC.
Transportation Signal Lenses and Accessories

5611 Morgan Avenue
Evansville, Indiana 47715
PHONE (812) 474-4256
FAX (812) 474-4258
gsi5611@generalsignals.com
www.generalsignals.com

INTRODUCING GENERAL SIGNALS NEW EASY FLEX BI-DIRECTIONAL GATE KEEPER

GSI PART# SK-1000-2WFLEX

The new design Gate Keeper allows the gate arm adapter (with or without a gate arm attached) to be quickly rotated back, parallel to the road for safe and easy maintenance or gate arm installation.

The unit can be pushed back with the simple removal of two bolts and the loosening of the main 5/8 inch pivot bolt.

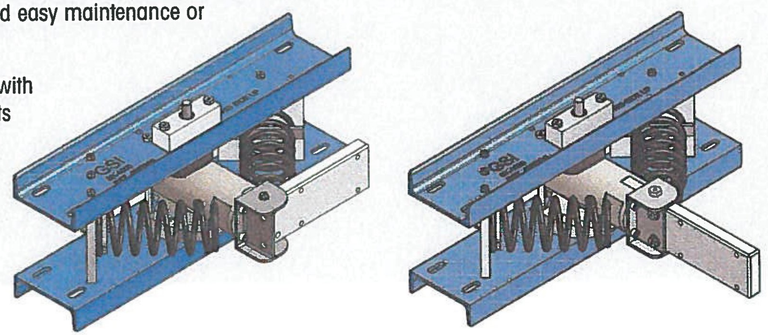

SAFETY FIRST

YOUR MAINTAINER'S SAFETY IS YOUR #1 CONCERN.

The General Signals Gate Keeper is designed to allow the gate arm to be rotated safely off of the road, so any maintenance can be performed. To secure the arm safely on the roadside, simply follow these quick steps:

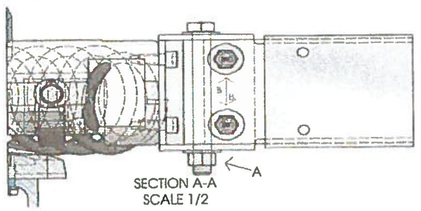

1.) Loosen, but not remove, the 5/8" x 6" pivot bolt (marked "A" on Drawing below.)

2.) Remove completely the 2 each ½" x 2 ¼" hex head bolts from the rotation attachment. (Marked "B" on Drawing below.)

3.) The gate arm (with or without a gate) will now easily rotate a full 90 degrees away from the road.

4.) After the gate attachment or maintenance, reattach and tighten bolts.

*Note: The rotation attachment is preset on all GSI Gate Keepers to allow the arm to rotate away from the track based on standard right hand installation. For island gates or gates on the left side of a one way street installation, the rotation attachment can be reversed by removing the 4 each 7/16" x 1" socket head bolts, rotating the piece 180 degrees and reattaching.

The new EZ Flex Gate Keeper from General Signals

SAFETY. EFFICIENCY. DURABILITY. RELIABILITY.

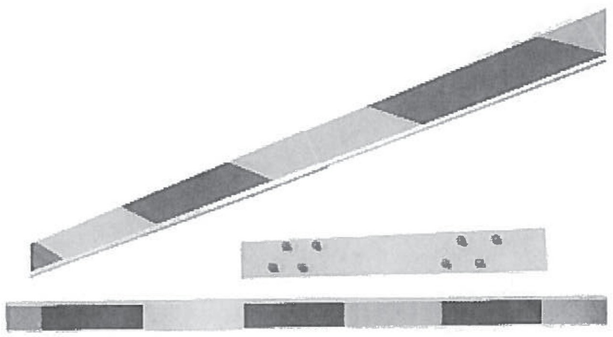

Complete Gate Arms
16' Single - Section Arm

Section Material	Sheeting Type	Lamp Type	Product Number
Aluminum	Ultra-high intensity; 1,000 candle reflectivity	LED	9298-6120
	Ultra-high intensity; 1,000 candle reflectivity vertical tape	LED	9298-6150
Fiberglass	Ultra-high intensity; 1,000 candle reflectivity	LED	9298-6420
	Ultra-high intensity; 1,000 candle reflectivity vertical tape	LED	9298-6450

8' - 16' Telescoping Arm

Section Material	Sheeting Type	Lamp Type	Product Number
8' aluminum first section 8' telescoping fiberglass second section	Ultra-high intensity; 1,000 candle reflectivity	LED	9298-6121
	Ultra-high intensity; 1,000 candle reflectivity vertical tape	LED	9298-6151
8' fiberglass first section 8' telescoping fiberglass second section	Ultra-high intensity; 1,000 candle reflectivity	LED	9298-6421
	Ultra-high intensity; 1,000 candle reflectivity vertical tape	LED	9298-6451

Railway Equipment Co.
39 E Z GATE ® - Gate Arms

16' - 24' Telescoping Arm

Section Material	Sheeting Type	Lamp Type	Product Number
16' aluminum first section 8' telescoping fiberglass second section	Ultra-high intensity; 1,000 candle reflectivity	LED	9298-6122
	Ultra-high intensity; 1,000 candle reflectivity vertical tape	LED	9298-6152
16' fiberglass first section 8' telescoping fiberglass second section	Ultra-high intensity; 1,000 candle reflectivity	LED	9298-6422
	Ultra-high intensity; 1,000 candle reflectivity vertical tape	LED	9298-6452

16' - 32' Telescoping Arm

Section Material	Sheeting Type	Lamp Type	Product Number
16' aluminum first section 16' telescoping fiberglass second section	Ultra-high intensity; 1,000 candle reflectivity	LED	9298-6123
	Ultra-high intensity; 1,000 candle reflectivity vertical tape	LED	9298-6153
16' fiberglass first section 16' telescoping fiberglass second section	Ultra-high intensity; 1,000 candle reflectivity	LED	9298-6423
	Ultra-high intensity; 1,000 candle reflectivity vertical tape	LED	9298-6453

21' - 42' Telescoping Arm

Section Material	Sheeting Type	Lamp Type	Product Number
21' aluminum first section 21' telescoping fiberglass second section	Ultra-high intensity; 1,000 candle reflectivity	LED	9298-6124
	Ultra-high intensity; 1,000 candle reflectivity vertical tape	LED	9298-6154

Railway Equipment Co.
41 E Z GATE ® - Gate Arms

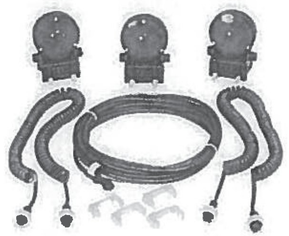



Lamp Kit; includes three 4" lamps, two coil cords, one straight cord and cord clamps

Lamp Type	Product Number
LED	9298-1120

Single Lamps

Lamp Type	Product Number
LED	9298-0320

Bulk Tape; sold by the foot

Sheeting Type	Hand	Product Number
Ultra-high intensity; 1,000 candle reflectivity	Right Hand	929536
	Left Hand	929535
Vertical Tape	Vertical	929534

Replacement Parts

Description	Product Number
2'-12' coil cord; plugs at both ends	9298-0401
25' straight cord; plug at one end	9298-0601
Cord clamps for first section (bag of 10)	9298-1401
Cord clamps for second section (bag of 10)	9298-1402
Replacement lens kit, polycarbonate	9298-0802
Tip lamp nut with gasket	9298-0700
Clamping plate with bolts	9298-0500
Diode tip package	9298-0900
Diode tip package for XP4, XLC	9298-0901
E Z Gate® support leg	9298-0870
Lamp body mount kit	9298-0850
LED replacement board	9298-0325
Gate arm tip sensor	9298-9820
Gate arm monitor system with tip sensor	9298-0050

Railway Equipment Co.
43 E Z GATE ® - Gate Arms

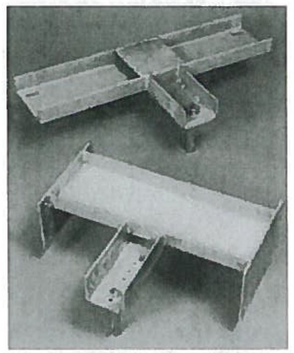

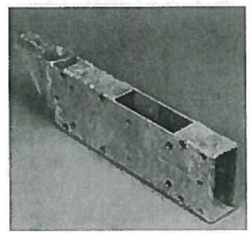

Breakaway Conversion/Adaptor Systems for Mast-Mount Mechanisms; with galvanized brackets

Description	Product Number
Complete system with fabricated galvanized steel adaptor	9298-2700
Galvanized conversion bracket with hardware	9298-1700
Fabricated galvanized steel adaptor	9298-2300
Shear bolt kit	9298-1801
Pivot pin	9298-0025

Breakaway Conversion/Adaptor Systems for Pedestal-Mount Mechanisms; with galvanized brackets

Description	Product Number
Complete system with fabricated galvanized steel adaptor	9298-2701
Galvanized conversion bracket with hardware	9298-1701
Fabricated galvanized steel adaptor	9298-2300
Shear bolt kit	9298-1801
Pivot pin	9298-0025

Reinforcing Sleeves; required with cast iron adaptor brackets

Description	Product Number
2' Reinforcing sleeve	92959
4' Reinforcing sleeve	92958
8' Reinforcing sleeve	92961

To order, call 800.624.5794

NOTE 1:- HEX NUT REF 6 TO BE TIGHTENED ENOUGH TO REMOVE PAINT FROM OUTER SURFACE OF CHANNEL THUS PROVIDING A GOOD ELECTRICAL GROUND

NOTE 2:- PLACE GROUND POST PARTS IN LARGE COIN ENVELOPE (TAG) AND SEAL BY STAPLING (PARTS NOT TO BE ASSEMBLED.)

USE 46989-7 UNTIL STOCK IS EXHAUSTED

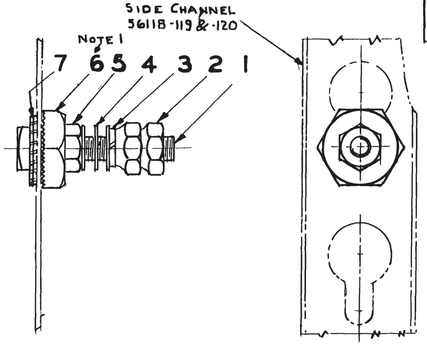

GENERAL RAILWAY SIGNAL CO · ROCHESTER NY

INDEX NAME: GROUND POST ASSEM. DWG NO: 58277

KIND & DESC: 5/16-18 GROUND POST ASSEM. WITH SELF SCRAPING BASE NU-IT

LISTED ON DWG | MAJOR SUB ASS'Y | DWG NO

DEVICE USED ON: ADJUSTABLE INSTRUMENT CASE DWG NO: 58271 KEY NO

SUPERSEDES 58277 (REV 5) DATED 11-30-54

TOLERANCES UNLESS OTHERWISE SPECIFIED: FRACTIONS ± | DECIMALS ± | ANGLES ±

GR-2	GR.1	DRAW. NO	REF	NAME
VOID	1	353	1	SCREW 10-18 x 1 1/2 SQ HD BRZ
	2	42843-9	2	NUT 10-18 x 3/16 HEX THK TH
	1	0623-4	3	WASHER #10 SPR LOCK BRZ
	3	1225-21	4	WASHER #10 ID .203 OD .040 TH
	1	46989-11	5	NUT 10-18 x 1/2 HEX THK TH
	1	18466	6	NUT 10-18 x 1 HEX THK TH
	2	53029-50	7	WASHER #10 SHAKEPROOF
	1	55085-193		TAG (ENVELOPE) SEE NOTE 2

REVISIONS & NO AND DATE OF DRAWING	REV. NO	APP'D
RETRACED. REF 2 WAS 42843-4 REF 5 WAS 46989-7 R-A2098 12-7-56	6	A

DRAWN: Shunner TR'D H. CHKD: HH 12/7/56

ENGR: [illegible] LAB

ENGR: [illegible] CH DR: EVS

ENGR: CH ENGR: [illegible]

NOTICE OF CONFIDENTIAL INFORMATION Information contained herein is confidential and is the property of the General Railway Signal Company Where furnished with a proposal the recipient shall use it solely to evaluate the proposal Where furnished to a customer it shall be used solely for purposes of inspection, installation or maintenance Where furnished to a supplier it shall be used solely in the performance of the contract The information shall not be used or disclosed by the recipient for any other purpose whatsoever

10 X 14

Signs for use with Grade Crossing Signals



3380-710
Reference A



3368-710-C
Reference F



3366-780
Reference I



3394-711
Reference R



SE-1781
Reference L



3385-100
Reference Q

WESTERN-CULLEN-HAYES, INC.
2700 W. 36TH PLACE CHICAGO, IL. 60632
(773) 254-9600 FAX (773) 254-1110

Signs for use with Crossing Signals

Reference	Reflective Sheeting	Description	Part No.
A	Engineering	Railroad Crossing	3380-710
A-1 (not shown)	Engineering	Railroad Crossing with 2" stripe on back	3380-750
A-2 (not shown)	Engineering	Railroad Crossing double sided	3380-810
A-3 (not shown)	High-Intensity	Railroad Crossing	3380-770
A-4 (not shown)	High-Intensity	Railroad Crossing with 5" stripe on back	3380-780
A-5 (not shown)	High-Intensity	Railroad Crossing double sided	3380-790
A-6 (not shown)	High-Intensity	Canadian Crossing	3252-720
B (not shown)	(specify sign)	Railroad Crossing with 4" mounting kit	3380-xxx-711-4
C (not shown)	(specify sign)	Railroad Crossing with 5" mounting kit	3380-xxx-811-5
D (not shown)	(specify sign)	Mounting kit only for Railroad Crossing on 4" mast	3380-711-4
E (not shown)	(specify sign)	Mounting kit only for Railroad Crossing on 5" mast	3380-811-5
F	Engineering	Number of Tracks Specify Number	3368-710-C
F-1 (not shown)	High-Intensity	Number of Tracks Specify Number	3368-770-C
G (not shown)	(specify sign)	Number of Tracks with 4" mounting kit	3368-xxx-711-4
H (not shown)	(specify sign)	Number of Tracks with 5" mounting kit	3368-xxx-C-811-5
I	Engineering	Stop on Red Signal	3366-780
I-1 (not shown)	High-Intensity	Stop on Red Signal	3366-770
J (not shown)	(specify sign)	Stop on Red Signal with 4" mounting kit	3366-xxx-711-4
K (not shown)	(specify sign)	Stop on Red Signal with 5" mounting kit	3366-xxx-811-5
L	Engineering	Do Not Stop On Tracks	SE 1781
M (not shown)	Engineering	Do Not Stop On Tracks with 4" mounting kit	1781-711-4
N (not shown)	Engineering	Do Not Stop On Tracks with 5" mounting kit	1781-811-5
O (not shown)	(specify sign)	Mounting kit only for signs F, I, and L on 4" mast	3366-711-4
P (not shown)	(specify sign)	Mounting kit only for signs F, I, and L on 5" mast	3366-811-5
Q	Engineering	No Clearance	3385-100
R	Engineering	Advanced Warning	3394-711

WESTERN-CULLEN-HAYES, INC.
2700 W. 36TH PLACE CHICAGO, IL. 60632
(773) 254-9600 FAX (773) 254-1110

Extension Brackets for Crossing Signs

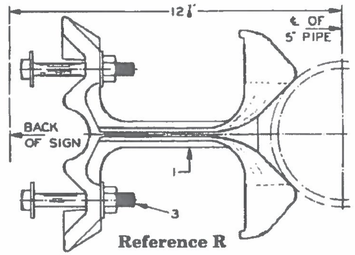

Reference R

Type 3366-40

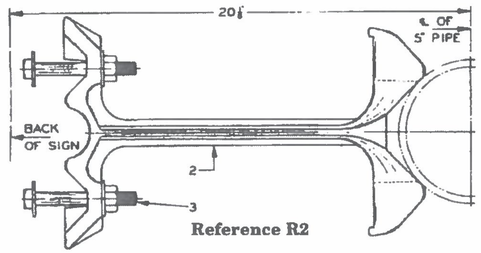

Reference R2

Type 3366-140

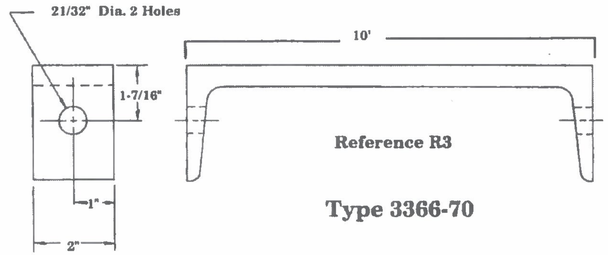

Reference R3

Type 3366-70

Ref. No.	Description	Part No.
R	Type 3366-40 extension bracket (cast aluminum) complete with bolts, nuts and washers	3366-A-40
R2	Type 3366-140 extension bracket (cast aluminum) complete with bolts, nuts and washers; use with wooden gates over 39"	3366-A-140
R3	Type 3366-70 extension channel, standard extension provided with all mounting kits for 5" mast	3366-70
1	Extension bracket, aluminum casting only	3366-A-41
2	Extension bracket, aluminum casting only	3366-A-141
3	Machine bolt, 1/2" - 13 x 4" square head bolt, with hex nut and 2 plain washers	3366-44

WESTERN-CULLEN-HAYES, INC.
2700 W. 36TH PLACE CHICAGO, IL. 60632
(773) 254-9600 FAX (773) 254-1110

KRPA Series Panel Plug-in Relay

- **5 to 10A current capability**
- **Contact arrangements of 1, 2 and 3 form C (CO)**
- **Octal type termination for quick installation**
- **Indicator lamp available on certain models**





Typical applications
Baggage handling, lighting, inspection equipment, marine.

Approvals

UL E22575; CSA LR15734
Technical data of approved types on request

Contact Data

Contact arrangement	1 form C (CO), 2 form C (DO), 3 form C (TO)	
Rated voltage	240VAC	
Rated current	10A	
Contact material	Ag	AgCdO
Min. recommended contact load	100mA, 12VDC	300mA, 12VDC
Frequency of operation	360 ops./hour	360 ops./hour

Contact ratings

Type	Load	Cycles
UL 508		
KRPA, Ag		
	5A, 120VAC	$100x10^3$
	3A, 240VAC	$100x10^3$
	1/10HP, 120VAC	$1x10^5$
	1/6HP, 240VAC	$1x10^5$
KRPA, AgCdO		
	10A, 240VAC	$100x10^3$
	1/3HP, 120VAC	$1x10^5$
	1/2HP, 240VAC	$1x10^5$
KA, Ag		
	5A, 120VAC	
	3A, 240VAC	
	1/10HP, 120VAC	
	1/6HP, 240VAC	
KA, AgCdO		
	10A, 120VAC	
	6A, 240VAC	
	1/6HP, 120VAC	
	1/3HP, 240VAC	
Mechanical endurance	$10x10^6$ ops	

Coil Data

Coil voltage range	6 to 220VDC 6 to 240VAC
Coil insulation system according UL	Class B

Coil versions, DC coil

Coil code	Rated voltage VDC	Operate voltage VDC	Coil resistance Ω±10%	Rated coil power W
6	6	4.5	32	1.15
12	12	9.0	120	1.2
24	24	18.0	472	1.25
48	48	36.0	1800	1.3
110	110	82.5	10000	1.2
–	220	Use 110V relay with 10KΩ, 5W resistor in series		

All figures are given for coil without preenergization, at ambient temperature +23°C.

Coil Data (continued)

Coil versions, AC coil

Coil code	Rated voltage VAC	Operate voltage VAC	Coil resistance Ω±15%	Rated coil power VA
6	6	5.1	6	2.01
12	12	10.2	24	2.02
24	24	20.4	85	2.02
20	120	102.0	2250	2.1
240	240	204.0	9110	2.1

All figures are given for coil without preenergization, at ambient temperature +23°C.

Insulation Data

Initial dielectric strength	
between open contacts	$1000V_{rms}$
between contact and coil	$1000V_{rms}$
between adjacent contacts	$1000V_{rms}$
Initial insulation resistance	
between insulated elements	KRPA: 1000MΩ KA: 100MΩ

Other Data

Material compliance	EU RoHS/ELV, China RoHS, REACH, Halogen content refer to the Product Compliance Support Center at www.te.com/customersupport/rohssupportcenter
Ambient temperature	
DC coil	KRPA: -45°C to 70°C KA: -45°C to 85°C
AC coil	KRPA: -45°C to 55°C KA: -45°C to 70°C
Category of environmental protection IEC 61810	RTI - dust protected KRPA and RTO - open style KA
Terminal type	KRPA: 8- or 11-pin octal type plug KA: solder terminals
Weight	85g
Packaging/unit	tray/25 pcs., box/150pcs

Accessories

For details see datasheet — Sockets and Accessories, KRPA Relays

Product Code	Description
27E891	Two pole DIN socket (use 20C318 clip)
27E892	Three pole DIN socket (use 20C318 clip)
27E122	Two pole track mount socket (use 20C318 clip)
27E123	Three pole track mount socket (use 20C318 clip)

11 2012, Rev 1112
www.te.com
© 2012 Tyco Electronics Corporation,
a TE Connectivity Ltd company

Catalog and product specification according to IEC 61810-1 and to be used only together with the 'Definitions' section

Catalog and product data is subject to the terms of the disclaimer and all chapters of the 'Definitions' section, available at http://relays.te.com/definitions

Catalog product data, 'Definitions' section, application notes and all specifications are subject to change

KRPA Series Panel Plug-in Relay (Continued)

Dimensions

KRPA

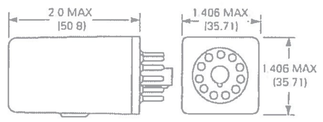

KA

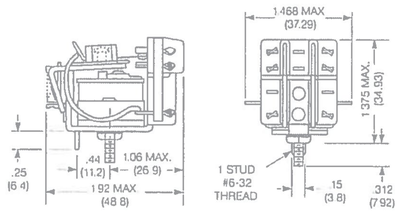

Terminal assignment

KRPA
1 form C

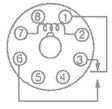

KRPA
2 form C

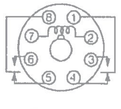

KRPA
3 form C

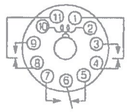

KA
1 form C

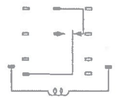

KA
2 form C

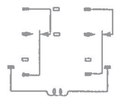

KA
3 form C

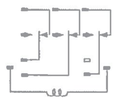

Product code structure

Typical product code: **KRPA -5 A Y -120**

Type
- **KRPA** Enclosed relay with octal-style plug
- **KA** Open style relay with solder terminals

Contact arrangement and rating
- **5** 1 form C (CO)
- **11** 2 form C (CO)
- **14** 3 form C (CO)

Coil input
- **A** AC, 50/60Hz
- **D** DC

Contact material and indicator lamp option
- **Y** Ag, no indicator lamp
- **G** AgCdO, no indicator lamp
- **N** AgCdO, with indicator (Code N only available with relay type KRPA)

Options
- **Leave blank** no additional options
- **F** Au flashed contacts
- **P** Push to test button

(Options F and P only available with relay type KRPA)

Coil voltage

Coil code: please refer to coil versions table

11-2012, Rev. 1112
www.te.com
© 2012 Tyco Electronics Corporation,
a TE Connectivity Ltd. company.

Catalog and product specification according to IEC 61810-1 and to be used only together with the 'Definitions' section.

Catalog and product data is subject to the terms of the disclaimer and all chapters of the 'Definitions' section, available at http://relays.te.com/definitions

Catalog product data, 'Definitions' section, application notes and all specifications are subject to change.

KRPA Series Panel Plug-in Relay (Continued)

Product Code	Arrangement	Contact Material	Coil	Option	Part Number
KA-5AG-120	1 form C, 1 CO	AgCdO	120VAC	Open style	7-1393099-1
KA-5AY-120		Ag			7-1393099-3
KA-5DG-6		AgCdO	6VDC		7-1393099-9
KA-5DG-12			12VDC		7-1393099-7
KA-5DG-110			110VDC		7-1393099-6
KA-11AG-120	2 form C, 2 CO		120VAC		3-1393099-6
KA-11AY-6		Ag	6VAC		4-1393099-1
KA-11AY-24			24VAC		4-1393099-0
KA-11AY-120			120VAC		3-1393099-9
KA-11DG-12		AgCdO	12VDC		4-1393099-3
KA-11DG-24			24VDC		4-1393099-5
KA-11DG-110			110VDC		4-1393099-2
KA-14AG-120	3 form C, 3 CO		120VAC		5-1393099-0
KA-14AY-120		Ag			5-1393099-4
KA-14DG-24		AgCdO	24VDC		5-1393099-7
KA-14DG-110			110VDC		5-1393099-5
KRPA-5AG-24	1 form C, 1 CO		24VAC	None	9-1393104-9
KRPA-5AG-120			120VAC		9-1393104-8
KRPA-5DG-6			6VDC		1393105-5
KRPA-5DG-12			12VDC		1393105-3
KRPA-5DG-24			24VDC		1393105-4
KRPA-5DY-12		Ag	12VDC		1393105-6
KRPA-5DY-24			24VDC		1393105-7
KRPA-11AG-6	2 form C, 2 CO	AgCdO	6VAC		2-1393104-8
KRPA-11AG-12			12VAC		2-1393104-4
KRPA-11AG-24			24VAC		1-1393105-2
KRPA-11AG-120			120VAC		2-1393104-5
KRPA-11AG-240			240VAC		2-1393104-7
KRPA-11AN-12			12VAC	Indicator	3-1393104-1
KRPA-11AN-24			24VAC		3-1393104-3
KRPA-11AN-120			120VAC		3-1393104-2
KRPA-11AN-240			240VAC		3-1393104-4
KRPA-11AY-6		Ag	6VAC	None	3-1393104-9
KRPA-11AY-12			12VAC		3-1393104-5
KRPA-11AY-24			24VAC		3-1393104-7
KRPA-11AY-120			120VAC		3-1393104-6
KRPA-11AY-240			240VAC		3-1393104-8
KRPA-11DG-6		AgCdO	6VDC		4-1393104-7
KRPA-11DG-12			12VDC		4-1393104-3
KRPA-11DG-24			24VDC		4-1393104-5
KRPA-11DG-48			48VDC		4-1393104-6
KRPA-11DG-110			110VDC		4-1393104-2
KRPA-11DG-125			125VDC		4-1393104-4
KRPA-11DG-24			24VDC		4-1393104-5
KRPA-11DG-48			48VDC		4-1393104-6
KRPA-11DN-12			12VDC	Indicator	5-1393104-0
KRPA-11DN-24			24VDC		5-1393104-1
KRPA-11DN-110			110VDC		4-1393104-9
KRPA-11DY-12		Ag	12VDC	None	5-1393104-6
KRPA-11DY-24			24VDC		5-1393104-7
KRPA-14AG-12	3 form C, 3 CO	AgCdO	12VAC		6-1393104-4
KRPA-14AG-24			24VAC		6-1393104-7
KRPA-14AG-120			120VAC		6-1393104-5
KRPA-14AG-240			240VAC		6-1393104-8
KRPA-14AN-24			24VAC	Indicator	7-1393104-4
KRPA-14AN-120			120VAC		7-1393104-3
KRPA-14AN-240			240VAC		7-1393104-5
KRPA-14AY-24		Ag	24VAC	None	7-1393104-8
KRPA-14AY-120			120VAC		7-1393104-7
KRPA-14AY-240			240VAC		7-1393104-9
KRPA-14DG-12		AgCdO	12VDC		8-1393104-2
KRPA-14DG-24			24VDC		8-1393104-4
KRPA-14DG-48			48VDC		8-1393104-5
KRPA-14DG-110			110VDC		8-1393104-1
KRPA-14DG-125			125VDC		8-1393104-3
KRPA-14DN-24			24VDC	Indicator	9-1393104-0
KRPA-14DY-24		Ag		None	9-1393104-3

11-2012, Rev. 1112
www.te.com
© 2012 Tyco Electronics Corporation,
a TE Connectivity Ltd company

Catalog and product specification according to IEC 61810-1 and to be used only together with the 'Definitions' section.

Catalog and product data is subject to the terms of the disclaimer and all chapters of the 'Definitions' section, available at http://relays.te.com/definitions

Catalog product data, 'Definitions' section, application notes and all specifications are subject to change

Sockets & Accessories, KRPA Relays

- Sockets for relays with 8-pin (octal) and 11-pin (undecal) round plugs
- Screw terminals
- Hold down springs
- Various mounting options



Approvals

UL E59244, CSA LR15734
Technical data of approved types on request

Technical Data

Socket contact material	Spring brass, tin plated
Socket body material	
27E122 and 27E123	Glass-filled polyester
27E891 and 27E892	Polyamide
Maximum current	10A
Maximum Voltage	300VAC

Ordering Code for Sockets

Product Code	Pins	Terminal type	Mounting	Part number
27E122	8	screw	panel/rail	1393143-6
27E891			snap-on DIN-rail	2-1419106-3
27E123	11		panel/rail	1393143-7
27E892			snap-on DIN-rail	2-1419106-4

All accessories must be ordered separately

Dimensions

Screw terminal socket for relays with 8-pin octal base 27E122
Offers screw termination for KRPA relays and other devices with 8 pin octal base. When panel mounting, two #6-32 screws of suitable length are required. When track mounting two 24A071 retainer clips or two 24A072 retainer clips are required

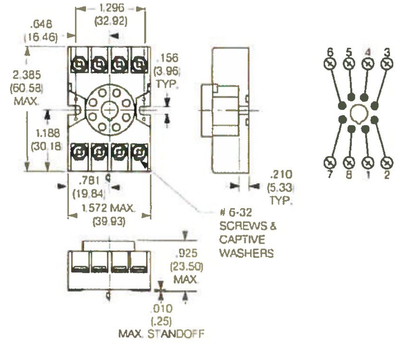

Screw terminal socket for relays with 11-pin undecal base 27E123
Offers screw termination for KRPA relays and other devices with 11-pin undecal base. When panel mounting, two #6-32 screws of suitable length are required. When track mounting, two 24A071 retainer clips or two 24A072 retainer clips are required —

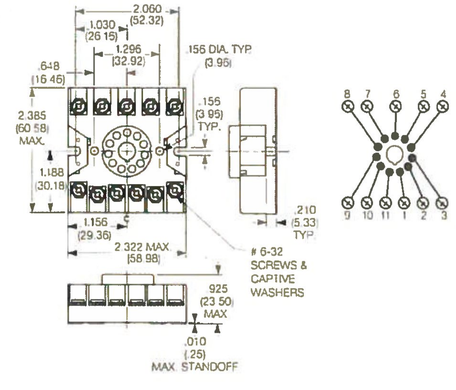

10-2012, Rev. 1012
www.te.com
© 2012 Tyco Electronics Corporation,
a TE Connectivity Ltd. company

Catalog and product specification according to IEC 61810-1 and to be used only together with the 'Definitions' section.

Catalog and product data is subject to the terms of the disclaimer and all chapters of the 'Definitions' section, available at http://relays.te.com/definitions

Catalog product data, 'Definitions' section, application notes and all specifications are subject to change

Sockets & Accessories, KRPA Relays (Continued)

Dimensions

Screw terminal, DIN rail, snap-mount socket 27E891

Offers screw termination for KRPA relays and other devices with 8 pin octal base. This socket is constructed with a spring-loaded latch which allows it to be quickly snapped onto or removed from a DIN or "top hat" style mounting track. No special tools or extra hardware is required for installation. Sockets have M3.5 screw terminals which accept up to two #12 AWG wires.

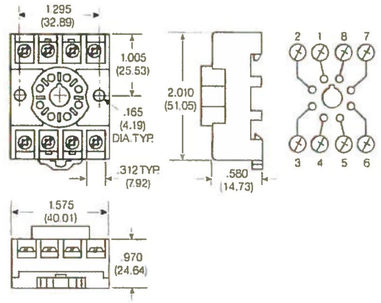

Screw terminal, DIN rail, snap-mount socket 27E892

Offers screw termination for KRPA relays and other devices with 11-pin undecal base. This socket is constructed with a spring loaded latch which allows it to be quickly snapped onto or removed from a DIN or "top hat" style mounting track. No special tools or extra hardware is required for installation. Sockets have M3.5 screw terminals which accept up to two #12 AWG wires.

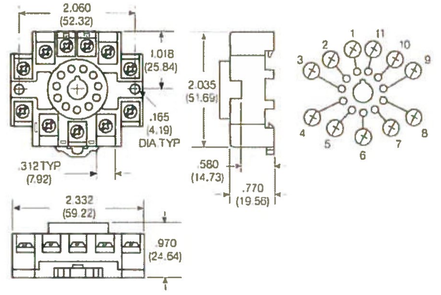

Ordering Code for Accessories

Product Code	Description	Part number
20C318	Snap-in relay hold down spring for use with KRPA, KCP and R10-T relay and KRPA sockets listed on these pages	4-1393159-8
20C176	Relay hold down spring for use with KRPA, KCP and R10-T relays and various hard mount KRPA sockets. Is held in place by mounting hardware (not supplied).	3-1393159-3
20C206	Relay hold down spring for use with KRP3 and KAP relays and various hard mount KRPA sockets. Is held in place by mounting hardware (not supplied).	1419111-1
20C419	Snap-in relay hold down spring (coil type) for use with various relays and various hard mount KRPA sockets.	5-1393159-0
24A110	Mounting track	1419111-6
24A071	Steel mounting clip with #6-32 screw - use with sockets on 24A110 track	1419111-5
24A072	Plastic twist mounting clip - use with sockets on 24A110 track	5-1393159-4
40G432	Plastic insulator - use with 24A071 to make end clip for 24A110 track	9-1393159-5

All accessories must be ordered separately

Dimensions

24A110 DIN rail style mounting track

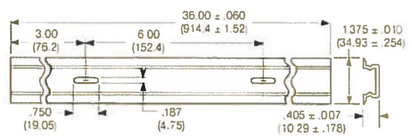

24A110 mounting track is designed to accept snap-mount sockets, as well as other P&B screw terminal sockets. Track is made of lightweight, sturdy extruded aluminum and is shipped in three-foot (914cm) lengths with mounting holes on six-inch (152mm) centers. Track can be cut to shorter lengths or used end-to-end.

Track and mounting accessones



10-2012, Rev. 1012
www.te.com
© 2012 Tyco Electronics Corporation,
a TE Connectivity Ltd. company

Catalog and product specification according to IEC 61810-1 and to be used only together with the 'Definitions' section.

Catalog and product data is subject to the terms of the disclaimer and all chapters of the 'Definitions' section, available at http://relays.te.com/definitions

Catalog product data 'Definitions' section, application notes and all specifications are subject to change.

PART NUMBERING

PN	NEMA CONFIGURATION	TYPE	CURRENT RATING	VOLTAGE RATING	DIMENSIONS - INCHES		NOTES
					A	B	
-000	NEMA L14-20	3-POLE 4-WIRE GROUNDING	20 A	125/250 V	2.22	2.75	SEE FIG. 2
-001	NEMA L6-15	2-POLE 3-WIRE GROUNDING	15 A	250 V	1.53	1.91	SEE FIG. 3
-002	NEMA L5-15	2-POLE 3-WIRE GROUNDING	15 A	125 V	1.53	1.91	SEE FIG. 4
-003	NEMA L14-30	3-POLE 4-WIRE GROUNDING	30 A	125/250 V	2.22	2.75	SEE FIG. 2
-004	NEMA L6-15	2-POLE 3-WIRE GROUNDING	30 A	250 V	1.53	1.91	SEE FIG. 3

DESCRIPTION: LOCKING PLUG

ELECTRICAL SPECIFICATION:
SEE PN TABLE

MATERIAL SPECIFICATION:
PLUG MATERIAL: NYLON

MAXIMUM PHYSICAL DIMENSION:
SEE FIG AND TABLE

MANUFACTURING PROCESS REQUIREMENTS:
AUTO-INSERTABLE: NO
SOLDERABILITY: HAND SOLDER
CLEANING RESTRICTION: DO NOT IMMERSE
ESD CLASSIFICATION: N/A

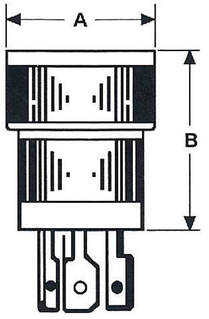

FIGURE 1: PLUG DIMENSIONS



FIGURE 2: NEMA L14-20

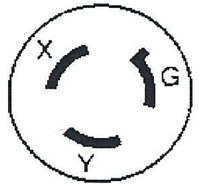

FIGURE 3: NEMA L6-15



FIGURE 4: NEMA L5-15

REVISION CONTROL				
REV	ECRN	DATE	BY	APPRV
BB0	90106744	11/07	BS	Prapulla

ENGINEERING	
Approved Prapulla	Date 11/07
Engineer ANAND GOGATE	
Drawn By SUBASH .B	Date

GE Transportation Systems
Global Signaling

Argo and Dillingham Rds, Grain Valley, MO 64029

Title PLUG LOCKING	
Drawing No. 132286-XXX	Sheet 1 of 1

ACCUTRACK PRODUCT SOLUTIONS

AURORA™ 12" and 8" LED Retrofit Highway Crossing Signals

Features

12" AURORA 300 and 160

- Brightest signal available in the market – 1600 cd on axis (300)
- Low cost – high intensity – 830 cd on axis (160)
- Independent bright white LED side lights for best viewing
- Regulated power supply – LED unit emits constant light output even at low voltages
- Red high impact UV stabilized outer lens
- No focusing required
- Compatible with all standard highway crossing signal housings
- Voltage turnoff at 7.5 volts
- No phankill required



AURORA™ Complete 12" LED Retrofit Signal

The **AURORA 12" LED** lamp unit measures 12" in diameter. It is a self contained unit; the lens and individual LEDs are not replaceable. The 12" LED unit is sealed and includes a high impact, UV stabilized, outer lens and separate white sidelights. A regulated power supply maintains constant light output during supply voltage variation.

The 12" LED units are available in a retrofit kit for installation in any standard highway crossing signal housing. These units are also available as a complete signal head with an aluminum housing, 20" background, and hood. For more information refer to manual P2468 and instruction sheet P2468-IS1.

Ordering Information

Product Name	Description	Part Number
AURORA 12" 160	12-inch AURORA Highway Crossing Signal Retrofit Kit	59649-200-02
AURORA 12" 300	Ultra Bright 12-inch AURORA Highway Crossing Signal Retrofit Kit	59649-200-03
AURORA 12" 160	12-inch AURORA Highway Crossing Signal Complete with Housing, 20-inch Dia. Background and Hood	59649-200-04
AURORA 12" 300	Ultra Bright 12-inch AURORA Highway Crossing Signal Complete with Housing, 20-inch Dia. Background and Hood	59649-200-05
AURORA 8"	8-inch AURORA Highway Crossing Signal Retrofit Kit	59649-202-02

ALSTOM



AURORA™ Complete 8" Crossing Signal showing side signal

The **AURORA 8" LED** light source, or LED lamp unit, measures 8" in diameter. It is a self contained unit; the lens and individual LEDs are not replaceable. The 8" LED lamp unit is a sealed unit that includes a high impact, UV stabilized, outer lens and separate white sidelights. A regulated power supply maintains constant light output during supply voltage variation. The unit contains two side-lights, one on each side of the signal. The front LEDs are red and the side-light LEDs are white. For more information refer to manual P2468 and instructions P2468-IS2.

Features

8" AURORA 160

- Has 160 LEDs (850 candela intensity on axis)
- Is designed to be a direct replacement for incandescent bulbs, LED boards, or LED modules that fit inside an 8 3/8 inch railway crossing signal
- Contains two side-lights, one on each side of the signal, each containing 12 white LEDs
- Is compatible with standard "8 inch" signal housings

Specifications

Data	AURORA 160 (8 inch)	AURORA 160 (12 inch)	AURORA 300 (12 inch)
Operating Voltage	8 to 20 VDC or 8 to 16 VAC	8 to 20 VDC or 8 to 16 VAC	8 to 20 VDC or 8 to 16 VAC
Current (Nominal)	1.0 Amps at 10 VDC 1.1 Amps at 10 VAC	1.0 Amps at 10 VDC 1.1 Amps at 10 VAC	1.2 Amps at 10 VDC 1.3 Amps at 10 VAC
Typical Power Consumption	10 Watts at 10 VDC 11 Watts at 10 VAC	10 Watts at 10 VDC 11 Watts at 10 VAC	12 Watts at 10 VDC 13 Watts at 10 VAC
Dominant Wavelength	630 NM	630 NM	630 NM
Peak Intensity	850 Candela	850 Candela	1600 Candela
Temp. Range Operating Storage	 -40° C to + 70° C -55° C to + 85° C	 -40° C to + 70° C -55° C to + 85° C	 -40° C to + 70° C -55° C to + 85° C

Performance

Parameter	Standard
Environmental Requirements	· AREMA Standard Class B · MIL-STD 810
IP Rating	IP65
Electronic Noise	Meets AREMA Standard
Photometric Requirements	Transport Canada Standard

For more information please contact Alstom Signaling:

Alstom Signaling
1025 John Street
West Henrietta, NY 14586
Phone: 1-800-717-4477

Visit us online:
www.alstomsignalingsolutions.com

Information contained in this document is indicative only. No representation or warranty is given or should be relied on that it is complete or correct or will apply to any particular project. This will depend on the technical and commercial circumstances. It is provided without liability and is subject to change without notice. Reproduction, use or disclosure to third parties without express written authority, is strictly prohibited. Alstom contributes to the protection of the environment. This leaflet is printed on environmentally friendly paper. Rev. 03/13/2015

ALSTOM

Harmon

AGA and AGE

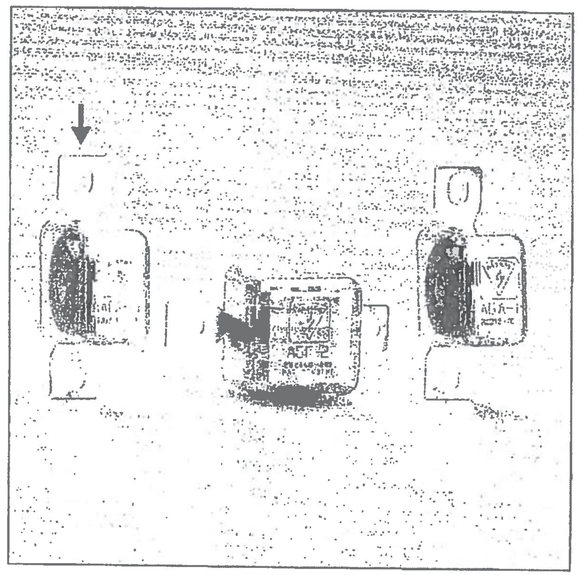

Air Gap Arrester and Air Gap Equalizer

FEATURES

- Provides a full range of low-cost surge protection for track, battery and line applications
- Arresters and equalizers use a self-extinguishing protective cover
- Physical specifications conform to rail industry mounting standards
- Electrical specifications meet or exceed rail industry standards

ADVANTAGES

- Arresters and equalizers are designed to be self cleaning during periods of surge activity
- Arresters and equalizers are designed to be highly resistant to end-to-end device shorts

DESCRIPTION

The Harmon Air Gap Arrester (AGA-1) and Air Gap Equalizer (AGE-1 and AGE-2) provide complete surge protection for low voltage track and battery circuits. Designed to survive harsh environmental conditions, the AGA and AGE provide a long-life alternative for low-voltage track or battery circuit surge protection.

Manufactured to rail industry standards, the AGE and AGA mount on a 2-3/8" terminal block. Both units are constructed with a special beveled edge to improve the expulsion of hot material during periods of surge activity. This self-cleaning action helps ensure the devices remain free of end-to-end shorts throughout their useful life.

(H0391)

AGA and AGE

OPTIONS

- The Harmon AGE-1 is a standard air gap equalizer. It can be used within air gap arrester/equalizer arrays for either track or low-voltage battery circuit application. (Part number 202217-000)
- The Harmon AGE-2 is a heavy-duty version of the AGE-1. It uses similar technology but can be used as the equalizer portion of an arrester/equalizer array in battery circuits of up to 36 VDC. (202217-001)
- The Harmon AGA-1 is a heavy-duty general purpose surge arrester. It can be used in conjunction with either the AGE-1 or AGE-2 in track, line or battery circuit applications. (202216-001)

ACCESSORIES

- Single row 12" long terminal strip. Includes binding nuts and washers. (250084-124)
- Double row 12" long terminal strip. Includes a lip strap, binding nuts and washers. (250094-000)
- Standard 2-3/8" terminal block. (250183-001)
- Standard three-post ceramic arrester base. (200089-000)
- Standard three-post ceramic arrester base with mounting hardware. (200089-001)

SPECIFICATIONS

ELECTRICAL

AGE-1
Line-to-line clamp voltage:
18 VDC
Breakover voltage:
100-250 VDC

AGE-2
Line-to-line clamp voltage:
45 VDC
Breakover voltage:
170-370 VDC

AGA-1
Breakover voltage:
650-1350 VDC

TRANSPORTATION TECHNOLOGY WORLDWIDE

Harmon Industries, Inc.
1300 Jefferson Court
Blue Springs, MO 64015
Tele: (816) 229-3345
Free: (800) 825-7090
Fax: (816) 229-0556

Printed in U.S.A.
SL-X0009A ©1997

(H0391)

PROPRIETARY & CONFIDENTIAL DATA
INFORMATION CONTAINED IN THIS DRAWING IS PROPRIETARY & CONFIDENTIAL DATA BY GE TRANSPORTATION SYSTEMS – GLOBAL SIGNALING AND IS SUBMITTED FOR THE SOLE PURPOSE OF MAINTAINING GE TRANSPORTATION SYSTEMS – GLOBAL SIGNALING EQUIPMENT. ANY UNAUTHORIZED USE OR DISTRIBUTION OF THIS DRAWING IS STRICTLY PROHIBITED. ©2001 GE TRANSPORTATION SYSTEMS – GLOBAL SIGNALING

Page 109 of 640

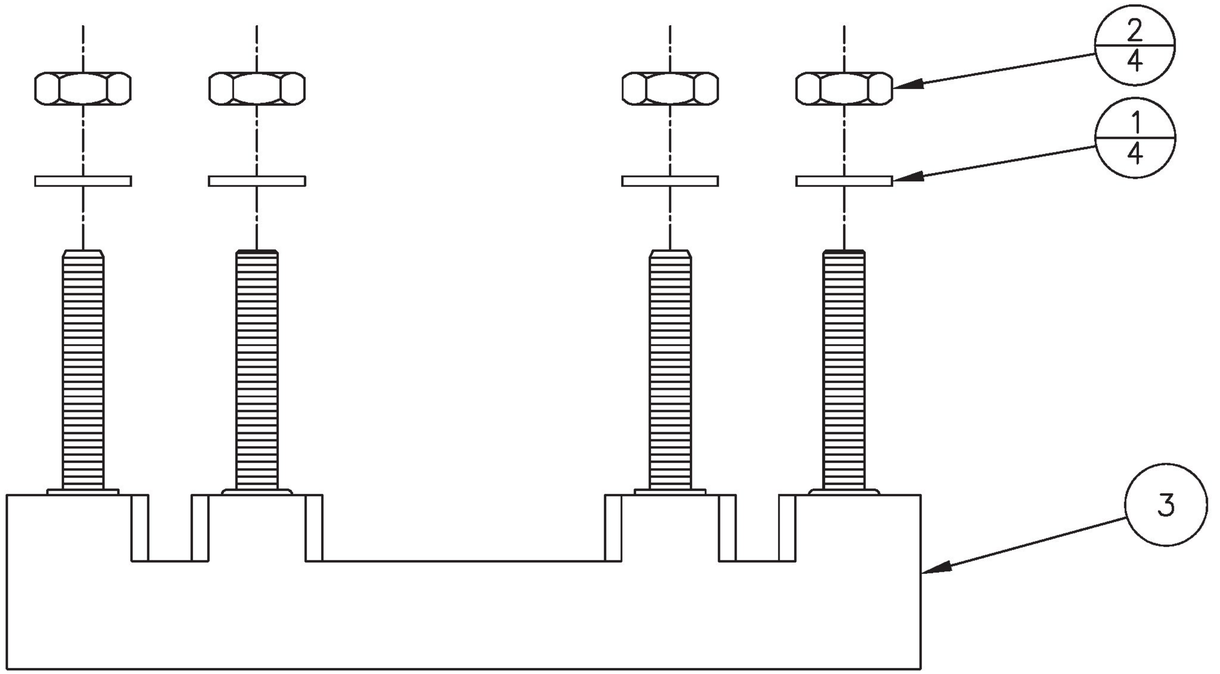

NOTES:

1. TORQUE NUTS (DIN 2) TO 60 IN LBS.

UNLESS OTHERWISE SPECIFIED DIMENSIONS ARE IN INCHES.
DIMENSIONS IN [ ] ARE MILLIMETERS.

.XX ± NA FRACTIONS ± NA
.XXX ± NA ANGLES ± NA

REV	CHANGE NO.	DATE	BY	APVD
AA0	90102800	08/05	SU	WW

DRAWN BY SUNIL UDDARAJU	DATE 08/01/05
APPROVED WAYNE WOMACK	DATE 08/05
PRODUCT:	

GE TRANSPORTATION SYSTEMS
GLOBAL SIGNALING

ARGO & DILLINGHAM, GRAIN VALLEY, MO 64029 U.S.A.

TITLE
ASSEMBLY
4 POST
ARRESTOR BASE

SIZE	SCALE	DRAWING NO.	SHEET	REV.
A	NTS	203032–000	1 OF 1	AA0

PROPRIETARY & CONFIDENTIAL DATA

INFORMATION CONTAINED IN THIS DRAWING IS PROPRIETARY & CONFIDENTIAL DATA BY GE TRANSPORTATION SYSTEMS – GLOBAL SIGNALING AND IS SUBMITTED FOR THE SOLE PURPOSE OF MAINTAINING GE TRANSPORTATION SYSTEMS – GLOBAL SIGNALING EQUIPMENT. ANY UNAUTHORIZED USE OR DISTRIBUTION OF THIS DRAWING IS STRICTLY PROHIBITED. ©2001 GE TRANSPORTATION SYSTEMS – GLOBAL SIGNALING

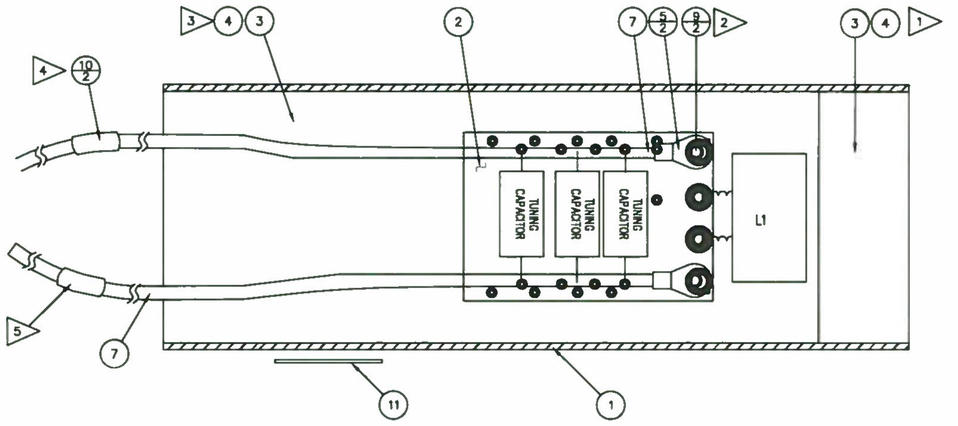

NOTES:

1. CLEAN THE TUBE WITH ALCOHOL. POUR A MINIMUM OF 1/2 INCH OF URETHANE (DINS 3 & 4) INTO THE END OF THE TUBE AND ALLOW IT CURE.
2. STEP 1 CRIMP AND SOLDER THE RING TONGUE (DIN 5) TO THE WIRE (DIN 7).
   STEP 2 BEND THE RING TONGUE UP SLIGHTLY TO PREVENT IT FROM TOUCHING OTHER CIRCUITS.
   STEP 3 CRIMP THE RING TONGUE/WIRE ASSEMBLY TO THE CIRCUIT WITH THE EYELET (DIN 9).
   STEP 4 SOLDER THE RING TONGUE TO THE CIRCUIT.
3. INSTALL THE COMPLETED PC BOARD ASSEMBLY IN THE TUBE AND FILL THE TUBE WITH URETHANE (DINS 3 & 4).
4. INSTALL A VINYL LABEL (DIN 10) WITH THE CORRECT FREQUENCY ON THE WIRE APPROXIMATELY 1 FOOT FROM THE COUPLER.
5. INSTALL A VINYL LABEL (DIN 10) WITH THE CORRECT FREQUENCY ON THE WIRE APPROXIMATELY 1 FOOT FROM THE END OF THE WIRE.
6. BUILD THE ASSEMBLY WITH ROSIN CORE SOLDER.

* FREQUENCY AS REQUIRED BY APPLICATION

UNLESS OTHERWISE SPECIFIED DIMENSIONS ARE IN INCHES. DIMENSIONS IN [ ] ARE MILLIMETERS.
.XX ± N/A FRACTIONS ± N/A
.XXX ± N/A ANGLES ± N/A°

REV	CHANGE NO.	DATE	BY	APVD
AA0	92528414	3/96	ONK	WLF
AB0	90031715	1/02	CAG	MHK

DRAWN BY	O. KJELLBERG	DATE 3/96
APPROVED	LARRY FARNHAM	DATE 3/96

PRODUCT: NBS-1

GE TRANSPORTATION SYSTEMS
GLOBAL SIGNALING
ARGO & DILLINGHAM, GRAIN VALLEY, MO 64029 U.S.A.

TITLE
ASSEMBLY
NBS-1
WITH 10 FOOT LEADS

SIZE	SCALE	DRAWING NO.	SHEET	REV.
D	NTS	250250-XXX	1 OF 1	AB0

This Drawing, which contains proprietary Information is the property of General Electric Company. It shall not be reproduced in any manner nor disclosed to third parties without written permission of General Electric Company

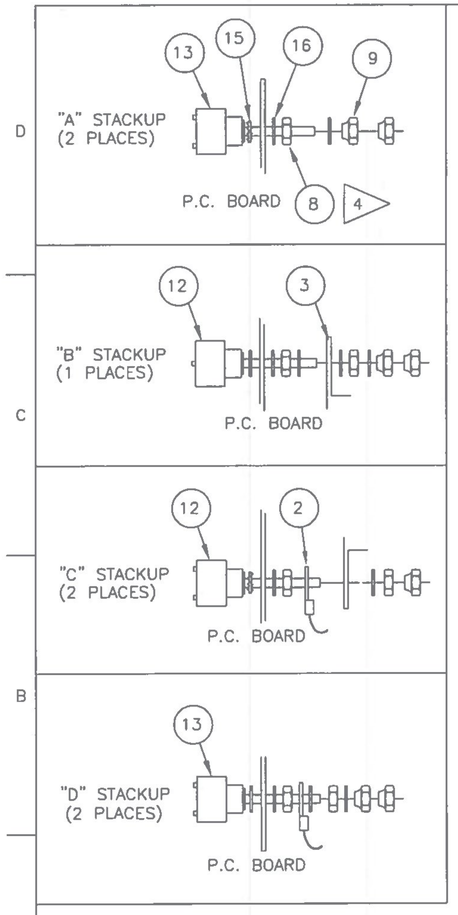

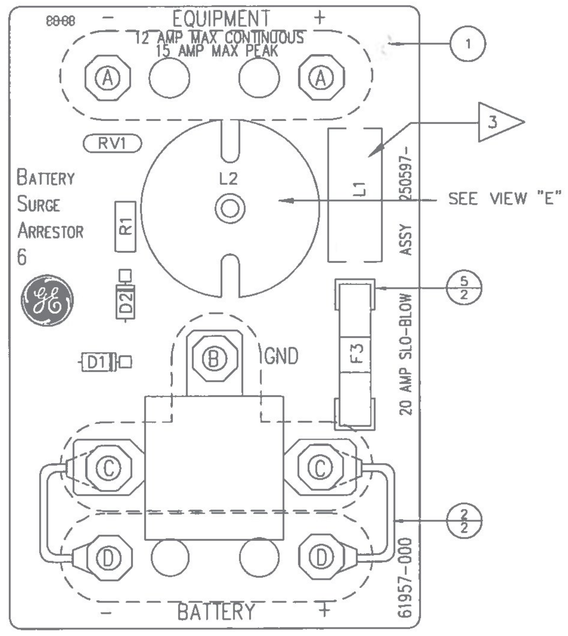

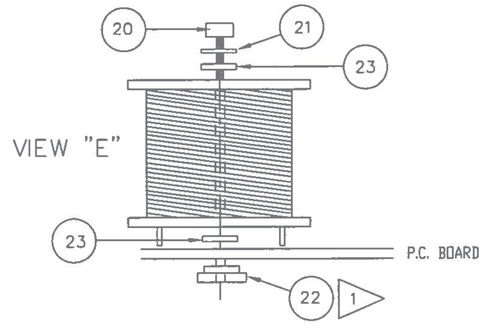

GE PROPRIETARY PROPERTY

THE INFORMATION AND/OR MATERIALS INCLUDED HEREIN ARE GE PROPRIETARY PROPERTY AND ARE PROVIDED IN CONFIDENCE. THIS GE PROPRIETARY PROPERTY SHALL NOT BE USED, DISCLOSED TO OTHER OR REPRODUCED WITHOUT THE EXPRESS WRITTEN CONSENT OF GE, INCLUDING BUT WITHOUT LIMITATION, IT IS NOT TO BE USED IN THE CREATION, MANUFACTURE, DEVELOPMENT, OR DERIVATION OF ANY REPAIRS, MODIFICATIONS, SPARE PARTS, DESIGNS, OR CONFIGURATION CHANGES OR TO OBTAIN ANY GOVERNMENT OR REGULATORY APPROVAL. IF CONSENT IS GIVEN FOR REPRODUCTION, IN WHOLE OR IN PART, THIS NOTICE AND THE NOTICE SET FORTH ON EACH PAGE OF THIS DOCUMENT SHALL APPEAR IN ANY SUCH REPRODUCTION IN WHOLE OR IN PART. THE INFORMATION AND/OR MATERIALS CONTAINED HEREIN MAY ALSO BE CONTROLLED BY THE U.S. EXPORT CONTROL LAWS. UNAUTHORIZED EXPORT OR RE-EXPORT IS PROHIBITED.

CAUTION: PARTS CAN BE DAMAGED BY STATIC. USE THE PROPER HANDLING TECHNIQUES TO AVOID DAMAGE.

BOARDS ARE TO BE ASSEMBLED PER "PWA REQUIREMENTS FOR SUPPLIERS" DOCUMENT 090032-000. (LATEST REV.).

NOTES: UNLESS OTHERWISE SPECIFIED

1. APPLY 1 DROP OF LIQUID THREAD LOCKER (DIN 25) TO THE THREADS OF THE PEM NUT (DIN 22) JUST PRIOR TO INSTALLING THE SCREW (DIN 20).
2. PLACE THE (4) #10 SCREWS (DIN 11) IN A BAG (DIN 6) AND ATTACH IT TO A TERMINAL WITH A CABLE TIE (DIN 7) FOR FOR SHIPMENT TO THE CUSTOMER.
3. APPLY ADHESIVE (DIN 10) UNDER L1.
4. APPLY 1 OR 2 DROPS OF LIQUID THREAD LOCKER (DIN 4) TO THE THREADS WHERE THE FIRST NUT (DIN 8) WILL SEAT AND THEN TORQUE THE NUT TO 60 INCH POUNDS. THIS NOTE APPLIES TO ALL 7 TERMINALS.

REV	ECRN	DATE	BY	APPR
BCO	90111769	08/23/11	CAG	JCS
BBO	90100938	5/22/01	CAG	GLJ
BAQ	90023705	09/08/99	DFR	JRP
A00	B64-0045	10/02/95	WD	JV

ARTWORK NO. 061957-000
SCHEMATIC NO. 135392-000
MIN/MOD LEVEL N/A
DRAWN BY VICKIE DOWELL
DATE 10/02/95
ECR APPROVED BY: JOHN SNIEGOWSKI

GE TRANSPORTATION SYSTEMS
GLOBAL SIGNALING

TITLE
PCB ASSEMBLY
BSA-6
BATTERY SURGE ARRESTOR 6

ENGINEER JEFF VOLSHTEYN | DRAWING NO. 250597-100 | SHEET 1 OF 1

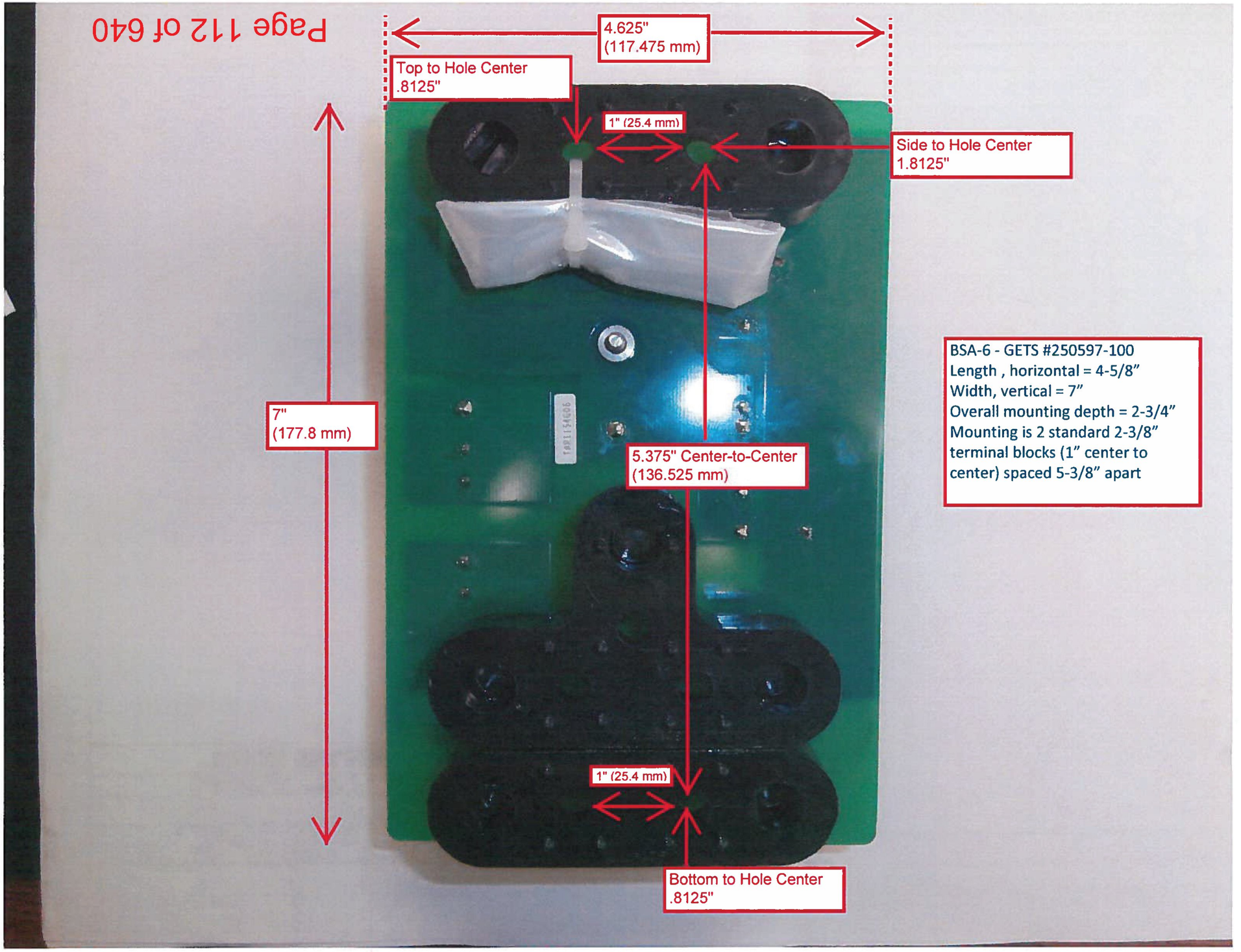
4.625"
(117.475 mm)
Top to Hole Center
.8125"
1" (25.4 mm)
Side to Hole Center
1.8125"
7"
(177.8 mm)
5.375" Center-to-Center
(136.525 mm)
1" (25.4 mm)
Bottom to Hole Center
.8125"
BSA-6 - GETS #250597-100
Length , horizontal = 4-5/8”
Width, vertical = 7”
Overall mounting depth = 2-3/4”
Mounting is 2 standard 2-3/8”
terminal blocks (1” center to
center) spaced 5-3/8” apart

" " 12" x 27" GETSGS # 040231-001
" " 12" x 38" GETSGS # 040231-002

Battery Trays

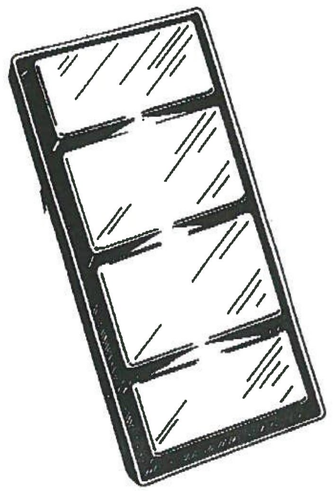

High Density
Polyethylene

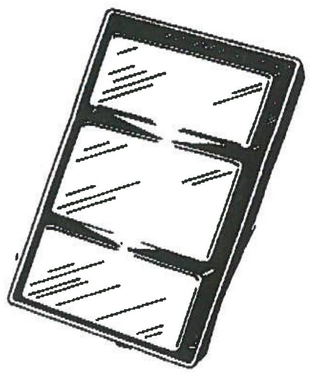

	FIBER-CO PN:	GETSGS PN:
12" Wide x 24" Long	82687-1-P	040231-000
12" Wide x 27" Long	82687-2-P	040231-001
12" Wide x 38" Long	82687-3-P	040231-002
13" Wide x 38" Long		

No Ground * Protect Battery Boxes and Floors For Special Applications, Custom Sizes are Available. For Further Information, Call or Write:

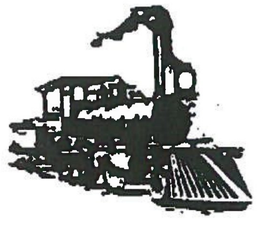

F I B E R - C O, I N C.
145 US Hwy 441 S.E.
Okeechobee, FL 34974
Phone: (863) 763-1927
Fax: (863) 763-1359
E-mail: fibercofl@earthlink.net

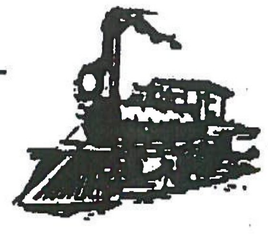

(H3128)

M-10-HIM-2H-S

Item number	Quantity	Unit	Item name
3565-396	1.00	PC	MECH SUPPORT 5"" PIPE""
RM-125-00002	60.00	IN	1-1/2 SEALTITE CONDUIT
ST-150	1.00	PC	STRAIGHT CONNECTOR
ST-90150	1.00	PC	90 DEG SEALTITE CONNECTOR
3570-115	8.00	PC	47# OBLONG CTWT
3570-109	2.00	PC	CTWT RETAINER WELDMENT **
3570-106	4.00	PC	ALUM CLAMP WASHER CASTING
CC-11-PP-3-0175	4.00	PC	1/2-13 X 1 3/4 LG S.H.BOLT
RR-00-AP-3	4.00	PC	1/2 SPLIT LOCKWASHER
PP-00-AP-3	4.00	PC	1/2 PLAIN STEEL WASHER
HH-12-PP-3	4.00	PC	1/2-13 HEX NUT
3570-112	1.00	PC	R.H.ALUM CTWG SUPPORT ARM ASSY
3570-113	1.00	PC	L.H.ALUM CTWT SUPPORT ARM ASSY
3597-131	1.00	PC	12V GATE MECHANISM W/EGM
HH-12-UU-3	8.00	PC	3/4-10 HEAVY H.H.NUT
PP-00-AS-3	8.00	PC	3/4 PLAIN STEEL WASHER
CC-12-TT-3-03	2.00	PC	5/8-11 X 3 MACH BOLT
HH-12-TT-3	2.00	PC	5/8-11 HEAV HEX NUT
PP-00-AR-3	4.00	PC	5/8 PLAIN STEEL WASHER
2149-121	1.00	PC	SIG. BASE W/CAST FOR 5"" PIPE""
715-24-2	1.00	PC	5"" PIPE PLASMA CUT""
960-58-5	1.00	PC	JUNCTION BOX CROSSARM ASSY
985-869	4.00	PC	12 LIGHT CASE/COVER ASY W/24BG

THE 3597 GATE MECHANISM FROM WESTERN-CULLEN-HAYES, INC.

U.S. Patent 6,307,339

The 3597 offers the same proven reliability as previous Western-Cullen-Hayes mechanisms but with the added performance of our patented Electronic Gate Monitor (EGM), and a new high torque permanent magnet motor.

The Electronic Gate Monitor protects the mechanism from damage if:

- The counterweights crash after the gate arm is knocked off.
- The gate arm crashes down caused by loss of power.
- The gate arm pumps.
- The motor overloads due to an obstructed gate arm.

The Model 3597 also features, as standard, a power down and test switch that operates t he mechanism to the horizontal position without a gate arm in place. This switch enables signal maintenance personnel to replace a damaged gate arm safely.

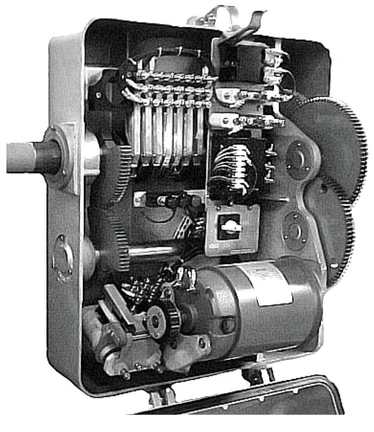

The set up and service of the 3597 is quite different than any other mechanism. Carefully r ead and follow the instructions in this manual to insure the proper set up and operation of the 3597 Gate Mechanism.

SECTION 1
TECHNICAL SEQUENCE OF OPERATION AND FIELD WIRING REQUIREMENTS

Electronic Gate Monitor (EGM) Description:
The Western-Cullen-Hayes, Inc. Model 3597 Gate Mechanism incorporates an Electronic Gate Monitor (EGM) System that protects against damage to the gate mechanism when common failure conditions occur.

The EGM operates by sensing voltage. If conditions exist that enables the dc mechanism motor to generate electricity, the EGM will sense the generated voltage which is greater than the normal dc power supply. When this over voltage condition occurs, the EGM de-energizes the two internal relays. A second circuit exists that accumulates voltage during normal, pumping and gate obstruction conditions. When the accumulated voltage reaches a cirtain threshold, the EGM de-energizes the two relays and connects the braking circuit.

Nominal 12 vdc is supplied to the EGM by connecting the red (positive) wire lead to terminal 2A located on the mechanism circuit controller. A black (negative) wire is connected to terminal 4 on the cam switch "C". When power is present, a red LED indicator on the EGM illuminates.

When conditions are normal, the EGM relays are energized and a green LED indicator on the EGM illuminates. When a failure has occurred to cause the EGM to de-energize the relays, the green LED goes dark.

There are three 1/4" studs on the EGM that are for connecting the main control relay outputs to the motor and the shorting resistor. The relay provides one set of Form C contacts (SPDT). Terminal common connects to motor terminal B, normally open connects to the cam switch and normally closed connects to the shorting resistor. During normal operation the voltage path is through the normally open contacts of the relay. During a fault event, the relay de-energizes and connects motor terminal A to the shorting resistor and back to motor terminal B which completes the dynamic braking circuits.

A second SPDT relay is provided within the EGM to annunciate that a fault condition has occurred and the EGM has operated. Three terminal connections are provided for customer connection to this feature. (ANC, ANO, ACOM).

The orange wire lead is connected to motor terminal A. The yellow lead is connected to terminal 12 on the cam switch and then connected to motor terminal B. The two voltage monitoring systems within the EGM are fed from these wires.

The blue wire lead is connected to terminal 2B on the mechanism circuit controller. This wire provides the path of voltage to reset the EGM after a fault has occurred. The reset signal is sent to the EGM each time a gate clear command is received from the control case. A fault condition can also be reset by the push-button located on the EGM.

Normal 3597 Gate Mechanism Operation:
Mechanism operating voltage is 12 vdc nominal. Static voltage is not to exceed 17 vdc. Voltage at the circuit controller terminals should not drop below 11 vdc during normal operations, or drop below 9 volts during lifting of weights, vertical mechanism pumping or mechanism obstruction. Positive voltage is applied to terminal 2A and negative is applied to terminal 7A on the circuit board. Mechanism control voltage is connected to terminal 2B on the circuit board. For 3597 mechanisms equipped with the PC Relay Board, positive voltage is applied to terminal 3A, and mechanism control voltage is connected to terminal 2A.

Gate Up Operation:
Static Position: Gate horizontal (down).
Contact Position: #1 normally closed (back) gate power down contact open, #1 normally open (front) gate snub down contact closed, #2 power up closed, #3 gate down closed, #4 gate clear open, #5 bell silence contact open, #6 spare open, #7 snub closed, hold clear p ower down contact closed.

When mechanism control voltage is applied, and if the cam switch "C" is in the run position, the pick coil of the hold clear energizes thus engaging the hold clear mechanism and opening the hold clear mounted power down contact. Voltage then flows through the cam operated power up contact (#2). This allows the hold coil of the hold clear to energize as well as the motor control relay (MCR). When the MCR energizes, positive voltage is applied to motor terminal A and negative is connected to motor terminal B, the motor starts and the gate raises under full power. When the main shaft of the mechanism reaches a point, normally 85 to 90 degrees, the #2 contact opens, the pick coil of the hold clear and the MCR de-energizes and the motor stops. As long as control voltage is supplied, the hold coil of the hold clear remains energized and the hold clear and ratchet wheel attached to motor holds the gate in the adjusted vertical position.

Gate Down Operation:
Static Position: Gate vertical (up).
Contact Position: #1 normally closed (back) gate power down contact closed, #1 normally open (front) gate snub down contact open, #2 power up open, #3 gate down open, #4 gate clear closed, #5 bell silence contact closed, #6 spare open, #7 snub open, hold clear down contact open.

When mechanism control voltage is removed, the hold clear de-energizes and the hold clear power down contact closes. Voltage travels through the closed #1 power down contact, the snub resistor and the contacts of the de-energized MCR to the motor. The motor powers the gate down until the #1 normally closed power down contact opens and power is removed from the motor. The #1 normally open snub down contact then closes allowing motor generated voltage to travel through the MCR contacts and the adjustable resistor creating dynamic breaking. This breaking slows and controls the decent of the gate. When the gate arm is almost horizontal, the #7 snub contact closes creating an short between the motor terminals. The gravitational weight of the gate arm then forces the gate to slowly descend the final degrees and the arm rests in the horizontal position.

Manual Electric Gate Down Operation:
When mechanism control voltage is present at the circuit controller terminal and the gate is in the vertical position, the gate can be lowered by operating the cam switch to the test position. The gate descends to the horizontal position. When the cam switch is operated to the run position, and the reset button on the EGM is depressed, the gate will operate to the vertical position as described under gate up operation. This operation is also a test of the EGM. The gate can also be lowered by loosening the gold test nut located at terminal 2B on mechanisms equipped with the PC Relay Board.

<u>EGM Controlled and Annunciated Fault Operations of the 3597 Gate Mechanism:</u>

Gate Arm Knocked-Off Operation:
If the gate arm is knocked off in any position except the vertical position, the force of gravity pulls the counterweights violently downward. If this condition occurs, the EGM senses a sharp increase in voltage being generated by the forced rotation of the motor. The relays in the EGM de-energize, the green LED will go dark and dynamic breaking, through external wiring within the 3597 mechanism, controls the descent of the weights and protects against damage to the mechanism. The dynamic braking is accomplished by shorting the A and B terminals of the motor through an adjustable resistor.

Gate Arm Guillotine Operation:
If mechanical or electrical failure occurs causing the attached gate arm to violently drop from the vertical to horizontal position, the EGM senses a sharp increase in voltage being generated by the forced rotation of the motor. The relays in the EGM de-energize, the green LED will go dark and dynamic breaking, through external wiring within the 3597 mechanism, controls the decent of the gate arm and prevents damage to mechanism and gate arm.

Open Electrical Circuit Failure:
The gate mechanism could display the operational characteristics of the gate arm being knocked off or guillotine operation if an open failure in the mechanism electrical circuit were to occur, such as a relay contact not making contact, open snub resistor or an open condition in the wiring. When such an event happens, the EGM will control the fault the same as described for the knock-off guillotine operations provided the EGM is connected and there are not any openings in the EGM circuit, the shorting resistor or the motor. Supply power does not have to be present at the EGM for it to control a fault.

Vertical Gate Arm Pumping Operation:
If a mechanical or electrical failure of the hold clear device or ratchet wheel occurs, the gate arm will oscillate (pump) in the vertical position. When this happens, the motor powers the gate until #2 power up contact opens. If the gate cannot be mechanically held in the vertical position, the force of gravity causes the arm to begin to descend, the #2 contact closes, power is applied to the motor and the gate is driven back to vertical. This series of events continuously repeats. Each time a pulse of voltage is received at the motor, a cirtain amount of voltage is stored within the EGM. When the stored voltage reaches a threshold, the EGM de-energizes it's relays, the green LED goes dark, the pumping ceases and the gate arm descends to horizontal position through the controlled dynamic breaking circuit. The gate arm will remain in the horizontal position until the EGM receives a pulse of 12 vdc positive voltage at the reset wire lead, created by a gate up command sent from the external crossing control system, or, the manual reset button located on the EGM is depressed. When reset, the green LED illuminates.

Horizontal Gate Arm Pumping Operation:
After a gate arm has been knocked off (refer to Gate Arm Knocked Off Operation) the gateless counterweight assembly will rest anywhere from 50 to 80 degrees vertical. After a crossing system commands the gate to raise to vertical, the EGM relays energize, the 3597 goes into normal gate up operation and the motor powers the mechanism to vertical position. When a gate down command is received from the crossing control system, the counterweight assembly may oscillate (pump) towards the horizontal position.
The gateless counterweight assembly powers down until the #1 normally closed power down contact opens. When the contact opens, the counterweights begin to descend the #1 normally closed contact closes again and repowers the unit. This series of events continuously repeats. Each time a pulse of voltage is received at the motor, a certain amount of the voltage is stored within the EGM. When the stored voltage reaches a threshold, the EGM de-energizes it's relays, the green LED will go dark, the pumping ceases and the gateless counterweight assembly comes to rest. The assembly will remain in this position until the EGM receives a pulse of 12 vdc positive voltage at the reset wire lead, created by a gate up command sent from the external crossing control systems, or the manual reset button located on the EGM is depressed. When reset the green LED illuminates. The mechanism then goes into normal gate up operation and the motor powers the mechanism to the vertical position.

Gate Hang-Up Failure Operation:
If for any reason the gate arm becomes obstructed while clearing power is applied to the motor, after a period of time the EGM will de-energize it's relay to prevent electrical component burn-up. When power is applied to the motor, a certain amount of the voltage is stored within the EGM. When the stored voltage reaches a threshold, the EGM de-energizes it's relays, the green LED goes dark and power is removed from the motor. If the gate has been obstructed while traveling from the horizontal to vertical position, the hold clear device is energized. When the EGM removes motor power and the hold clear is energized, the gate will rest at the point which power was removed from the motor. If the gate has been obstructed by vandals hanging on the gate, the gate will rest at the position it was in when the EGM de-energized. If the gate is obstructed by a light unit or information sign which has been moved from normal position or by a misaligned hi-wind bracket, the gate will rest the position it was in when the EGM de-energized. Once a gate down command is received from the crossing control system, the gate will gravity down to the horizontal position, if the obstruction is not such as to hold the gate arm in the obstructed position. Once a gate up command is received from the crossing control system, the gate will operate to the vertical position as normal, or if the obstruction still exists, the hang-up sequence will repeat.
If the gate rests in a traffic obstruction position, it is possible to manually raise the gate to higher position by walking the gate up by hand. The gate will then hold in the repositioned location.

EGM Operation Annunciation:
Whenever the EGM de-energizes due to any of the described fault events, and the user has connected the EGM to external logic or recording devices, the auxiliary relay contacts will transfer and send an indication to the external device that a fault has been controlled.
The green LED will be dark when the EGM is in the fault mode. When reset, the relays energize and the green LED illuminates.

3597 Gate Mechanism Arm Service Operation:

Gate Arm Service (Power Down) Mode:
When a gate arm is knocked off, and the controlled gate arm knock-off operation has completed, the counterweights and the gate arm adapter channel rest in a mostly vertical position. It is necessary to position this assembly in the horizontal position to install a replacement gate arm. The 3597 incorporates a three position rotary contactor for this purpose. In the run position, the gate operates normally and the EGM is connected into the circuit.

In the test position, the circuitry is disconnected from the motor and the EGM is connected to the circuit. In the down position, full power down is applied to the motor to drive the counterweights to the horizontal position. In this position the EGM is disconnected from the circuits. The counterweights are held in the horizontal position via a 1/2" ratchet wrench with 7/8" socket. When the contactor switch is released, it automatically spring returns to the test position and places the EGM back into the circuit. See page 32 for specific instructions.

The service mode of the 3597 mechanism allows for a total of 12, forty-seven pound counterweights (required for a 40 foot gate) to be operated when a minimum of 11 vdc power is maintained at the mechanism motor.

Wiring Requirements.

The 3597 mechanism will draw up to 55 amps when it is obstructed and up to 40 amps while lifting weights. **To allow proper mechanism operation, wire size for the motor power circuit must be calculated so that voltage does not drop below 11 vdc during normal operations, or drop below 9 vdc during lifting of weights, vertical mechanism pumping or mechanism obstruction.** The selected wire must be installed from the power source to the terminals at the mechanism circuit controller. If it is not physically possible to run the wire from the junction box base to the mechanism, then a minimum, one 3/16" bond strand conductor must be installed from the junction box base terminals to the mechanism circuit controller terminals. **Do not install #9 or #10 wire at any point in the motor power circuit.** Refer to the following example and formulas.

VOLTAGE DROP EXAMPLES AT 55 AMP LOCKED ROTOR CURRENT

WIRE LENGTH IN FEET	VOLTAGE DROP USING 1-#6 CABLE	PERCENT DROP @ 12 V SUPPLY	PERCENT DROP @ 15 V SUPPLY
50	2.3	19.16	15.33
100	4.6	38.33	30.66
150	6.9	57.5	46
200	9.2	76.6	61.3

WIRE LENGTH IN FEET	VOLTAGE DROP USING 2-#6 CABLE	PERCENT DROP @ 12 V SUPPLY	PERCENT DROP @ 15 V SUPPLY
50	1.15	9.58	7.66
100	2.3	19.16	15.33
150	3.45	28.75	23
200	4.1	34.16	27.33

WIRE LENGTH IN FEET	VOLTAGE DROP USING 3-#6 CABLE	PERCENT DROP @ 12 V SUPPLY	PERCENT DROP @ 15 V SUPPLY
50	0.76	6.33	5.06
100	1.53	12.75	10.2
150	2.3	19.16	15.33
200	3.06	25.5	20.4

WIRE LENGTH IN FEET	VOLTAGE DROP USING 1-3/16" BOND STRAND	PERCENT DROP @ 12 V SUPPLY	PERCENT DROP @ 15 V SUPPLY
10	0.35	2.91	2.33

WIRE LENGTH IN FEET	VOLTAGE DROP USING 1-#10 WIRE	PERCENT DROP @ 12 V SUPPLY	PERCENT DROP @ 15 V SUPPLY
10	1.17	9.75	7.8

TO CALCULATE OTHER LENGTHS OF RUN USE THE FOLLOWING FORMULA.

$$\frac{22 \times \text{WIRE LENGTH IN FEET} \times 55}{\text{CIRCULAR MILS}}$$

WIRE SIZE	CIRCULAR MILS	WIRE SIZE	CIRCULAR MILS
#10	10400	3/16"	35140
#9	13100	#4	41700
#6	26300	#2	66400

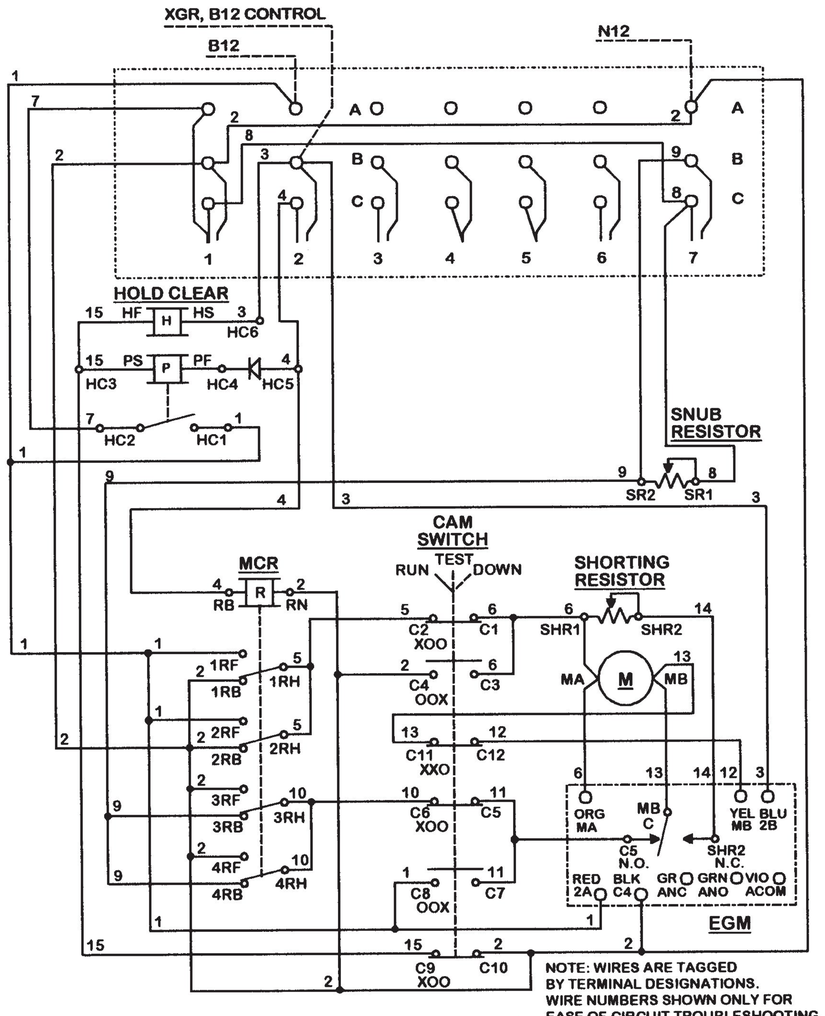

SHOWN WITH GATE IN CLEAR POSITION, EGM NORMAL & ENERGIZED AND CAM SWITCH IN THE RUN POSITION.

CONTACT	CLOSED	FUNCTION	TENSION
1B	75-90 DEG.	POWER DOWN	18-28 OZ.
1F	0-70 DEG.	SNUB DOWN	18-28 OZ.
2	0-86 DEG.	POWER UP	18-28 OZ.
3	0-10 DEG.	GATE DOWN	16-24 OZ.
4	82-90 DEG	GATE CLEAR	16-24 OZ.
5	10-90 DEG.	BELL	16-24 OZ.
6	SPARE	SPARE	16-24 OZ.
7	0-2 DEG	SNUB	16-24 OZ.

WESTERN-CULLEN-HAYES, INC.
3597 GATE MECHANISM WITH ELECTRONIC GATE MONITOR
WIRING DIAGRAM 3597-WD
REV. D, 11/28/01, ECO 8736

U.S. PATENT 6,307,339

MANUFACTURE DISCONTINUED 12/02

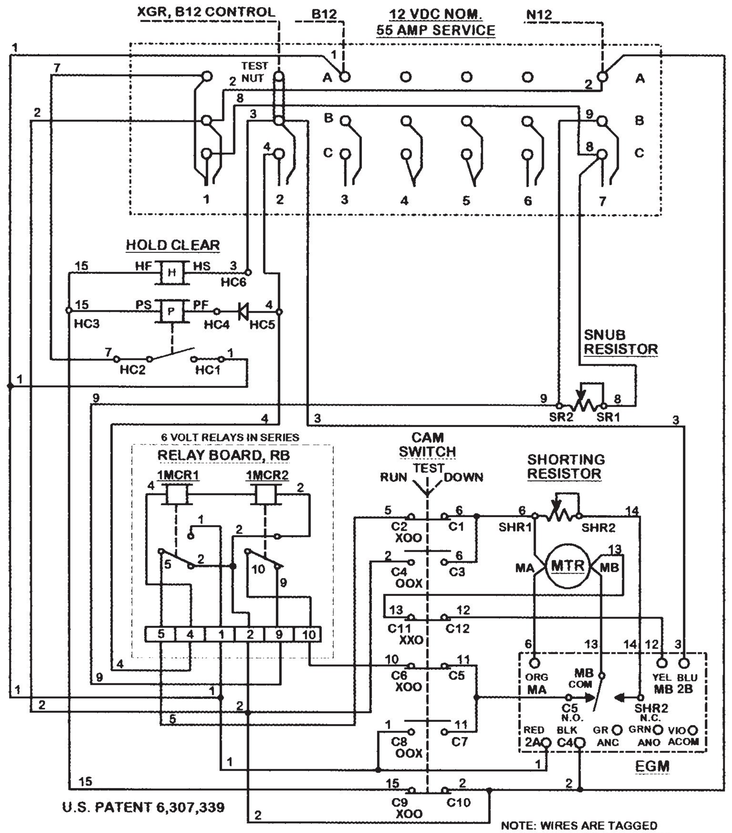

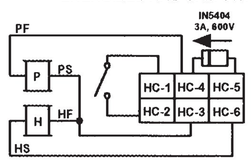

HOLD CLEAR AND TERMINALS

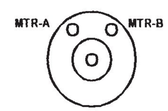

MOTOR TERMINALS VIEWED FROM HOLD CLEAR END.

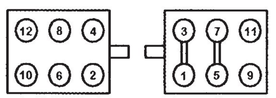

LEFT SIDE RIGHT SIDE

CAM SWITCH TERMINALS

CONTACT	CLOSED	FUNCTION	TENSION
1B	75-90 DEG.	POWER DOWN	18-28 OZ.
1F	0-70 DEG.	SNUB DOWN	18-28 OZ.
2	0-86 DEG.	POWER UP	18-28 OZ.
3	0-10 DEG.	GATE DOWN	16-24 OZ.
4	82-90 DEG	GATE CLEAR	16-24 OZ.
5	10-90 DEG.	BELL	16-24 OZ.
6	SPARE	SPARE	16-24 OZ.
7	0-2 DEG	SNUB	16-24 OZ.

WESTERN-CULLEN-HAYES, INC.
3597 GATE MECHANISM WITH ELECTRONIC GATE MONITOR AND PC RELAY BOARD.

WIRING DIAGRAM 3597-WD-RB.
4/17/02, ECO 8782B

MANUFACTURE DISCONTINUED 02/2005

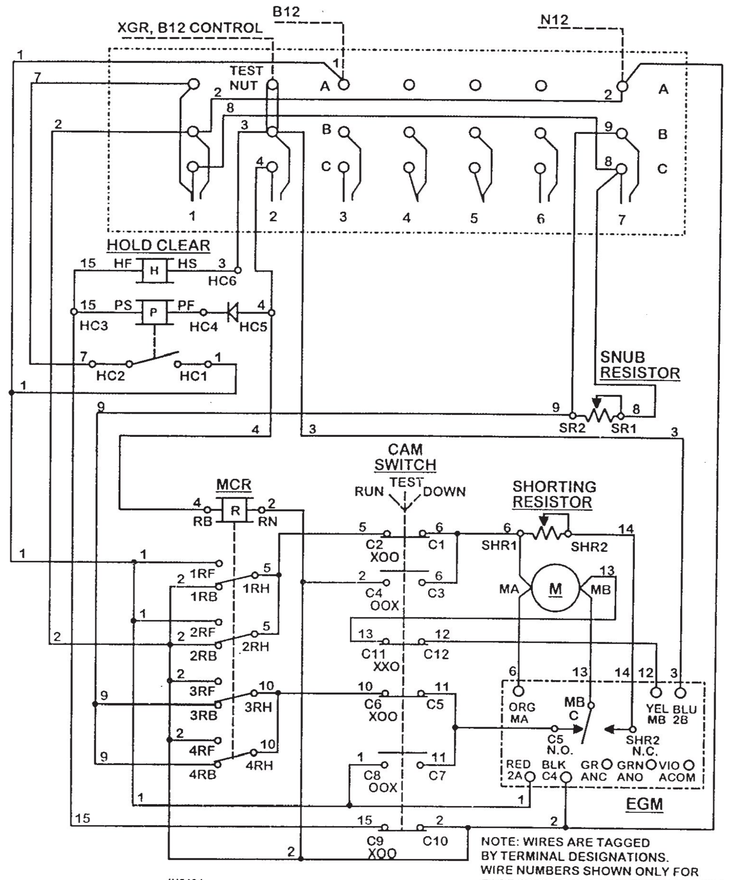

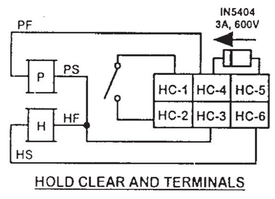

HOLD CLEAR AND TERMINALS

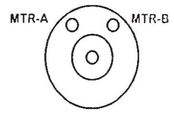

MOTOR TERMINALS VIEWED FROM HOLD CLEAR END.

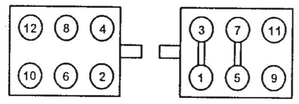

CAM SWITCH TERMINALS

SHOWN WITH GATE IN CLEAR POSITION, EGM NORMAL & ENERGIZED AND CAM SWITCH IN THE RUN POSITION.

CONTACT	CLOSED	FUNCTION	TENSION
1B	75-90 DEG.	POWER DOWN	18-28 OZ.
1F	0-70 DEG.	SNUB DOWN	18-28 OZ.
2	0-86 DEG.	POWER UP	18-28 OZ.
3	0-10 DEG.	GATE DOWN	16-24 OZ.
4	82-90 DEG	GATE CLEAR	16-24 OZ.
5	10-90 DEG.	BELL	16-24 OZ.
6	SPARE	SPARE	16-24 OZ.
7	0-2 DEG	SNUB	16-24 OZ.

WESTERN-CULLEN-HAYES, INC.
3597 GATE MECHANISM WITH ELECTRONIC GATE MONITOR AND TEST NUT.
WIRING DIAGRAM 3597-WD.
REV. E, 2/18/2005, ECO 9086
U.S. PATENT 6,307,339
draw4mechs\m10\3597\3597-wd.ds4

This Page Left Blank Intentionally

SECTION 2
INSTALLATION INSTRUCTIONS - MODEL 10 SIGNAL

1. Install foundation in proper location per the requirements of the installation. Refer to figures 1 and 2 for typical foundation details.

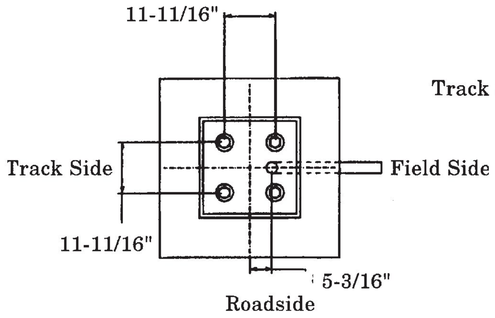

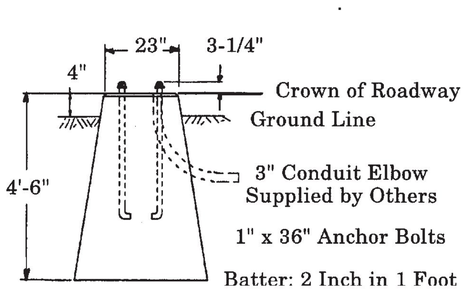

Suggested Concrete Foundation for Model 10 Gate Signal Using 2149 Junction Box Base

Figure 1

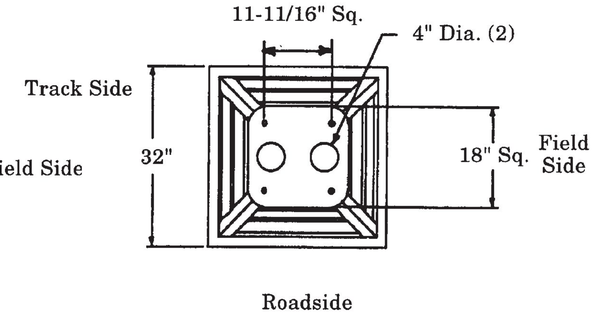

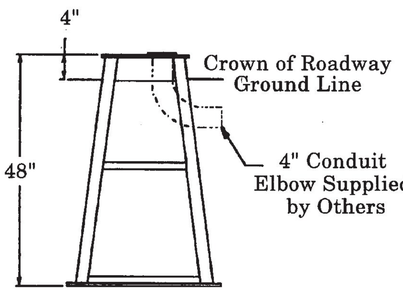

Galvanized Steel Foundation No. 1181-9

Figure 2

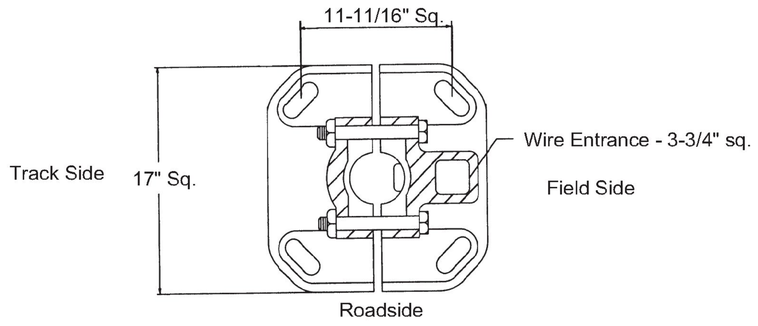

Plan View of Type 2149 Junction Box Base

Figure 2A

2. Remove the junction box cover to access the conduit adapter and hardware kit. Attach the conduit adapter to the top of the base. Loosen the base clamp bolts and install the lower pipe shield in the bottom of the base. Insert the signal mast into the base and tighten the base clamp bolts. Place the base and mast assembly on the foundation with the junction box cover facing oncoming traffic as shown in figure 3. Secure the assembly to the foundation anchoring bolts.

Typical Model 10 Signal

Figure 3

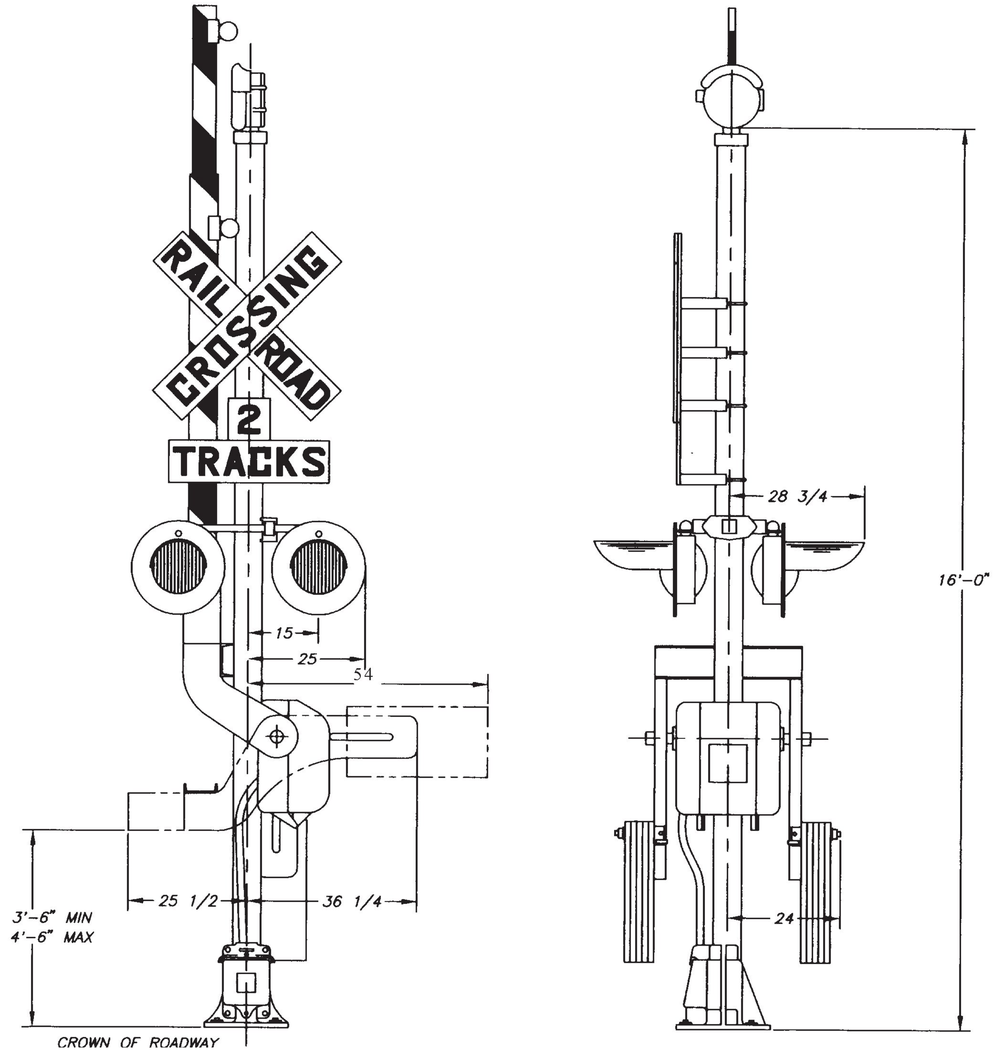

3. Secure the mechanism support assembly to the mast 48 inches above the top of the foundation in a position as shown in figure 4. **Note:** Adjustment may be required to position the gate arm at 3'-6" to 4'-6" above of the Roadway Crown after the mechanism and gate arm are installed.

4. Install 4 square head bolts into the slots in the rear of the mechanism case. Set the mechanism onto the support assembly. Install saddle clamps and nuts.

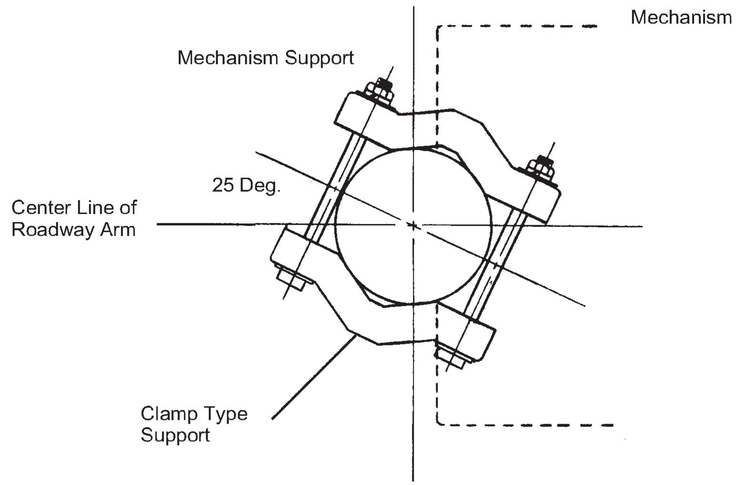

Clamp Type Mechanism Support Installation

Figure 4

5. Remove hole plugs from mechanism case. Install conduit fittings, adapters, cable grip and ventilator. Install the 1-1/2" sealtite from the base to the mechanism. Be sure enough slack is available to allow rotation of the mechanism.

6. Remove nuts, washers and spline protectors from the ends of the mechanism main shaft.

7. Make sure the main shaft is in the position it assumes when the gate arm is down (horizontal). This condition exists when segment gear (A) is resting on the horizontal stop pin (B) at point (C) as shown in figure 5.

Ref. No.	Description
A	Segment Gear
B	Horizontal Stop Pin
C	Contact Point
D	Horizontal Stop Spring Housing
E	Vertical Stop Pin
F	Vertical Stop Pin Nut
G	Clearance Gap 3/32" Minimum
H	Horizontal Stop Pin Locknut
J	Horizontal Stop Pin Cover
K	Verical Stop Pin Cover

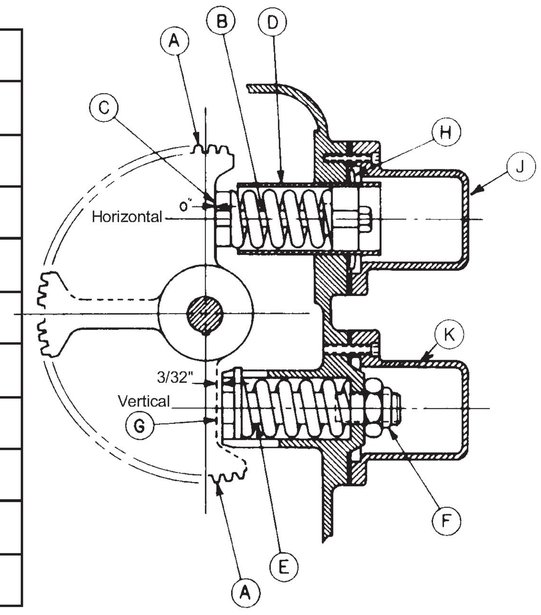

Stop Detail

Figure 5

8. Refer to figure 6. If the mechanism is supplied with a sidewalk arm shaft (C), install the sidewalk arm adapter to the shaft at this time. Do not install the sidewalk arm. Apply gate arm counterweight support arms (B) to the mechanism main shaft (A). Keeping the gate end of the supports in the down (horizontal) position, install washers and hand tighten nuts on the main shaft.

   CAUTION: Do not apply counterweight before the roadway gate arm is installed.

9. Install conversion bracket, breakaway adapter channel, or Gate Gard (D) to the counterweight support arms (B). Secure with provided hardware. The square head bolts fit into the recess on the support arm with the threads facing outward.

10. Tighten all installed hardware.

11. **Installation of fiberglass or aluminum/fiberglass gate arms**

    Assemble the arm by sliding sections together to achieve desired length. In some cases, it may be necessary to drill holes in the inserted arm section. Secure sections with provided hardware.

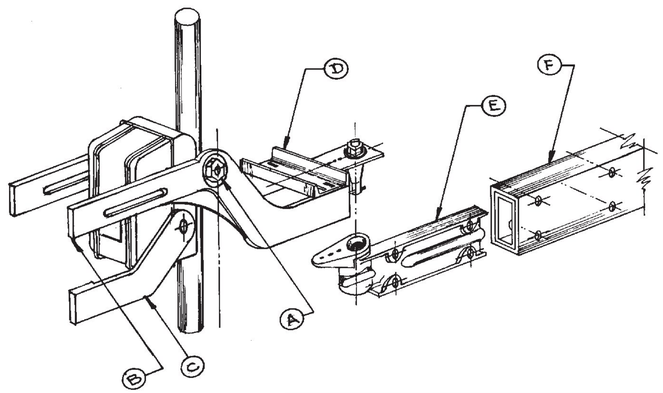

Gate and Counterweight Support Installation

Figure 6

Ref. No.	Description
A	Main Shaft
B	Gate and Counterweigh Support Arms
C	Sidewalk Arm Adapter
D	Conversion Bracket or Adapter
E	Cast Breakaway Adapter
F	Gate Arm Section

PIVOT TYPE BREAKAWAY ADAPTER

Referring to figure 6, page 13, insert the cast breakaway adapter (E) into the gate arm end section (F) and secure with provided hardware. Position the gate arm with adapter attached 90 degrees from the mechanism assembly. Slip adapter onto mounting pin. Rotate arm 90 degrees, until the holes in the adapter align with the holes in the conversion bracket.

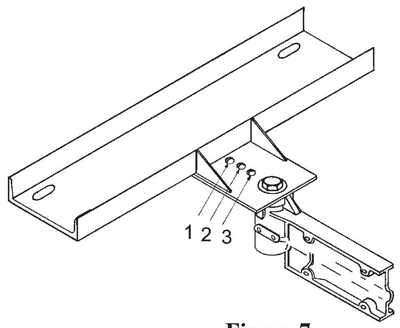

Figure 7

Install brass shear bolts in holes as instructed below. Gate arm length is measured from the centerline of the signal mast.

0-18' Gate Arms - Holes 2 and 3
19'-28' Gate Arms - Holes 1 and 2
Over 29' Gate Arms - Holes 1, 2 and 3

GATE GARD ADAPTER

Refering to figure 6, Page 13, install the Gate Gard (D) adapter onto the counterweight arms (B). Observe the instruction sheet provided with the Gate Gard. Install gate arm (F).

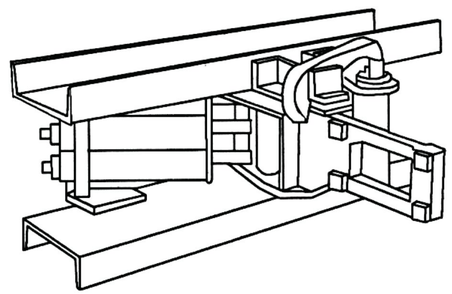

Figure 7A

12. Install gate arm lights using provided hardware. Attach cable to the arm using eyelets provided. Leave slack in the cable between eyelets to provide drip points. Route cable through cable grip installed in the mechanism and terminate wires at required binding posts or fuse block panel. Refer to figure 9 for proper lamp spacing.

13. Install signal light units, signs and bell or pinnacle as required. Complete electrical wiring to these units.

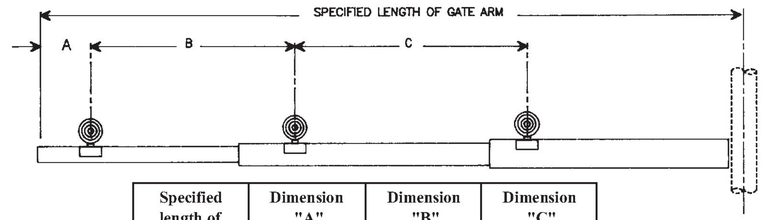

Specified length of gate arm	Dimension "A"	Dimension "B"	Dimension "C"
14 Ft.	6"	36"	5'-0"
15 Ft.	18"	36"	5'-0"
16-17 Ft.	24"	36"	5'-0"
18-19 Ft.	28"	41"	5'-0"
20-23 Ft.	28"	4-0"	5-0"
24-28 Ft.	28"	5-0"	5'-1"
29-31 Ft.	36"	6-0"	6'-0"
32-34 Ft.	36"	7-0"	7'-6"
35-37 Ft.	36"	9-0"	9'-0"
38 Ft. & Over	36"	10-0"	10'-0"

Suggested Roadway Gate Arm Light Spacing

Figure 8

NOTE: The installation must be properly wired and power applied at this time, and from this time forward.

14. **Installation of Counterweights**

Oblong counterweights on cast iron or aluminum counterweight arms. Refer to figure 9, page 16 and tables 1 and 2, pages 21 and 22.

Install the counterweight support plate to the counterweight arm by inserting the clamp washer (short) studs through the slot from the outside of the arm. Install the clamp washers, flat washers and nuts to the studs. Locate the support plate near the center of the slot and tighten the clamp washer nuts. Be sure that the teeth in the clamp washers are seated into the teeth on the inside of the counterweight arm.

Raise and secure the gate arm in the up (vertical) position. Install the counterweights to the counterweight (long) studs. Install the flat washers and nuts to these studs and hand tighten the nuts. If two counterweight arms are supplied, distribute the weights evenly on the two arms. Align the weights and insert the alignment bolt into the holes at the bottom of the weights. Install washers and nut onto the alignment bolt and securely tighten. Now position the weights near the middle of the slot in the weights and securely tighten the counterweight nuts. Lower the gate arm to the horizontal position.

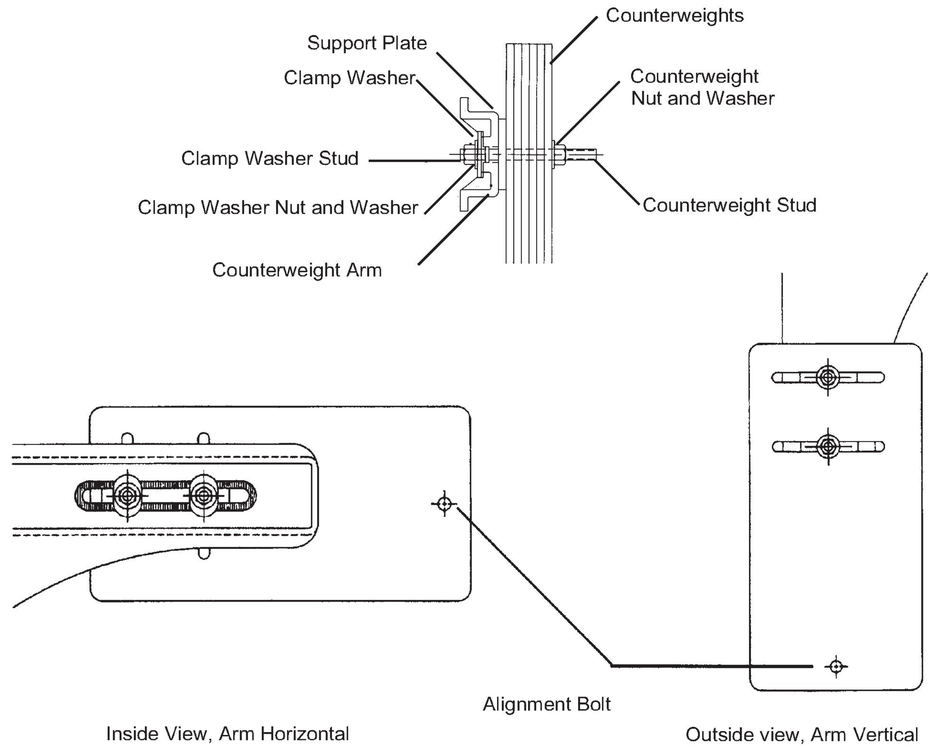

Oblong Counterweight Assembly
Figure 9

15. **Horizontal Torque Adjustment**
Oblong counterweights on cast iron or aluminum counterweights arms.
Refer to figure 10, page 18.

NOTE: If a sidewalk arm is being used, all torque adjustments must be made with the sidewalk arm support installed and the ß sidewalk gate arm installed.

Open the mechanism cover and place the gate in the horizontal position by operat ing the cam switch, C, to the test position. Once the gate rests in the horizontal position, press the reset button on the EGM and be certain that the green LED is lit.

A. **Using torque wrench PN:3590-K9**

NOTE: Do not attempt to obtain reading with a foot pound torque wrench placed on the mainshaft or by using other than the WCH torque wrench specified.

Push down on the counterweights to raise the gate arm about 2 feet.

Attach the 7/8" socket attached to the torque wrench onto the hex surface on the motor pinion gear.

Slowly release the counterweight arm and allow the wrench to rotate and rest against the housing. Note the scale reading.

The reading should be between 100 and 120 pounds regardless of the gate arm length.

If adjustment is required, loosen the clamp washer nuts to allow the weights to be moved. If the reading is more than specified, move the counterweights away from the mechanism. If the reading is less than specified, move the counterweights toward the mechanism.

When weights are installed on two counterweight arms, move the weights on each arm proportionally.

After the proper scale reading is achieved, remove the torque wrench. Tighten the clamp washer nuts securely. Be sure the teeth on the clamp washers are securely seated into the teeth in the counterweight arm. Remove the Torque Wrench.

B. **Using spring scale PN: 3562-210**

Attach the 50 pound spring scale to the gate arm at a point located 10 feet from the center of the mechanism main shaft.

Lift the gate by the scale and note the scale reading. The scale reading should be 10 to 12 pounds regardless of the length of the gate arm.

If adjustment is required, loosen the clamp washer nuts to allow the weights to be moved. If the reading is more than specified, move the counterweights away from the mechanism. If the reading is less than specified, move the counterweights toward the mechanism.

When weights are installed on two counterweight arms, move the weights on each arm proportionally.

After the proper scale reading is achieved, remove the scale. Tighten the clamp washer nuts securely. Be sure the teeth on the clamp washers are securely seated into the teeth in the counterweight arm.

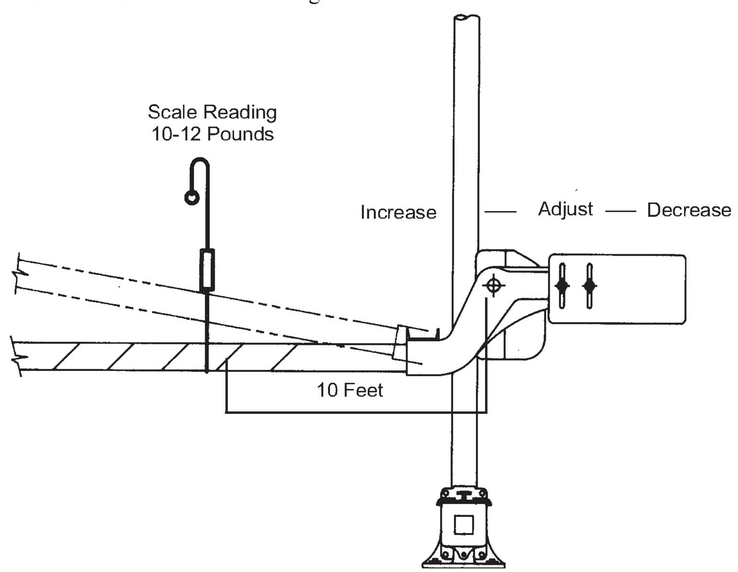

Horizontal Torque Adjustment
Shown with Oblong Counterweights

Figure 10

16. **Vertical Torque Adjustment**
Refer to figure 11, page 20.

Control the gate to vertical position. Press the EGM Reset button, Operate the cam switch, to the run position.

A. **Using torque wrench PN: 3590-K9**

NOTE: Do not attempt to obtain reading with a foot pound torque wrench placed on the mainshaft or by using other than the WCH torque wrench specified.

Attach the 7/8" socket attached to the torque wrench onto the hex surface on the motor pinion. Securely hold the wrench with your right hand. Operate the cam switch to the test position with your left hand.

Rotate the torque wrench counterclockwise until it is near the mechanism case. With your left hand, hold in on the hold clear armature. While holding the arma ture, remove the torque wrench. Rotate the wrench clockwise, reinstall onto the motor pinion and grasp securely. Release the armature and once again rotate the wrench until it is near the mechanism case. Repeat this operation 6 times, then allow the wrench to rest on the mechanism case.

Observe the torque reading. Compare the reading with the torque specification for the applied length of gate arm as listed in tables 1 & 2, pages 21 and 22.

If the reading is not within plus or minus 20 pounds of the specification, adjust the counterweights to achieve a reading within specifications.

Loosen the counterweight stud nuts just enough to allow the weights to slide in the weight slots.If the reading is more than specified, move the counterweights away from the roadway.If the reading is less than specified, move the counter weights toward the roadway.

Repeat procedure as required until the scale reading is within the listed specification.

Hold in on the hold clear armature, remove wrench, operate the cam switch to the run position. If necessary, raise the gate by applying finger pressure on contact #2 to power the gate up.
When complete. Remove the torque wrench. Tighten the counterweight stud nuts.

B. **Using spring scale PN: 3562-210**

Refer to Figure 11, Page 20.
Control the gate to the vertical position.

Attach the 50 lb spring scale between the gate arm and the mast, on a horizontal plane, at "X" distance from the center of the mechanism main shaft. Refer to tables or pages, to determine "X" distance for the length of applied gate arm.

Place the cam switch in the test position and press the EGM reset button.
The gate will lower and be restrained by the scale. Note the scale reading and compare with the specification in tables 1 or 2, pages 21 and 22 .

If adjustment is required, loosen the counterweight stud nuts just enough to allow the weights to slide in the weight slot. If the reading is more than specified, move the counterweights away from the roadway. If the reading is less than specified, move the counterweights toward the roadway.

Operate the cam switch to the run position. If necessary, raise the gate by applying finger pressure on contact #2 to power the gate up.
When complete, securely tighten the counterweight stud nuts.

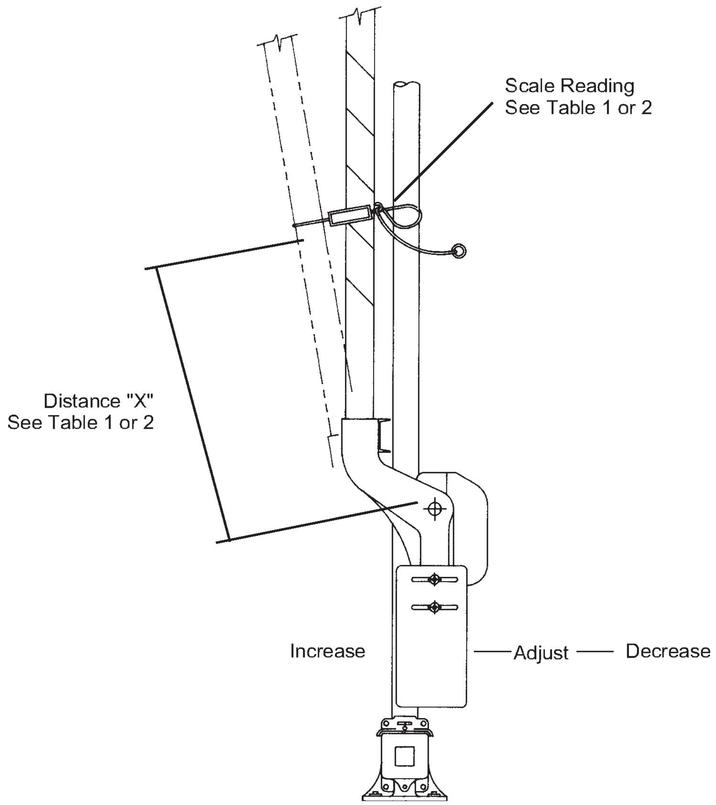

Vertical Torque Adjustment
Shown with Oblong Counterweights

Figure 11