INDEX OF SHEETS

1. TITLE SHEET
2. TYPICAL SECTION
3. QUANTITY SHEET & DRAINAGE SHEET
4. EARTHWORKS SHEET
5-8. R.O.W. SHEETS
9-11. LAYOUT SHEETS
12. PROFILE SHEET
13-23. BRIDGE SERIES BR-100
24-26. BLANK
27. A-61 SLOPES IN SOLID ROCK EXCAV. 8/26/81 R.
28. B-1 BANKING TABLES 12/8/71
29. B-5 TYPICAL SLOPE ROUNDING 12/6/71
30. B-11 SLOPE STABILIZATION 12/12/74 R.
31. BLANK
32. D-1 PRECAST RCP DROP INLET 12/6/71
33. D-2 UNDERDRAIN 12/16/76 R.
34. D-3 TREATED GUTTERS 4/27/73 R.
35. D-4 FLUSHING BASINS 7/24/75 R.
36. D-6 REINFORCED CONC. DROP INLET 4/4/73 R.
37. D-16 CAST IRON GRATE, M.E.S. 11/14/72 R.
38. BLANK
39. E-3 APPROACH SIGNS, BRIDGE CONSTRUCTION 12/15/78 R.
40. E-6 CONSTRUCTION SIGNS, ON PROJECT 4/1/80 R.
41. E-7 DELINEATION, BARRICADES AND DETOURS 2/12/82 R.
42. E-7a TYPE III BARRICADE BREAKAWAY 4/8/82 R.
43. E-17 REGULATORY SIGNS 1/8/74 R.
44. E-24a SIGN SUPPORTS, GALV. STEEL, YIELDING FOR TYPE "A" SIGNS 1/8/81 R.
45. E-25 SIGN SUPPORTS, TUBULAR ALUM. YIELDING 6/17/81 R.
46. E-29 SIGN PLACEMENT, NON-EXPRESSWAY 8/25/81 R.
47. G-1 GUARDRAIL, STEEL BEAM 12/16/80 R.
48. G-1d GUARDRAIL, STEEL BEAM W/ WOOD POSTS, TYPE II 12/13/80 R.
49. G-4 MARKER POSTS, GUIDE POSTS 5/25/82 R.
50. G-11 GUARDRAIL STEEL BEAM ANCHOR 5/29/79 R.
51. BLANK
52. J-1 PROJECT AND BOUNDARY MARKERS 6/27/80
53. T-1 TEMPORARY EROSION CONTROL DETAILS 12/7/76 R.
54. T-2 TEMPORARY EROSION CONTROL DETAILS 7/5/72
55. BLANK
56. SB-R4A-82 BRIDGE RAILING 6/18/82 R.
57. SB-R4B-82 GUARDRAIL 12/29/81
58. SCB-D1-75 GENERAL INFORMATION 9/14/81 R.
59. SCB-D4-76 PLAN & REINFORCEMENT LAYOUT 1/8/76 R.
60. SCB-D6-75 DETAILS 1/3/79 R.
61. SCB-D9-71 CURTAIN WALL 1/27/75 R.
62-63. BLANK
64-78. CROSS SECTIONS
79-80. BLANK
81-85. CHANNEL SECTIONS

NOTE. SEE SHEET 2 FOR RECORD PLANS AND MATERIAL SUPPLIERS

NOTE: ANY FURTHER INFORMATION CONCERNING FINAL QUANTITIES, GRADES OR OTHER DETAILS RELATING TO THIS PROJECT MAY BE FOUND IN EITHER THE FIELD BOOKS OR THIS ESTIMATE FILE.

STATE OF VERMONT
AGENCY OF TRANSPORTATION

PROPOSED IMPROVEMENT

TOWN OF MORRISTOWN
COUNTY OF LAMOILLE
ROUTE NO.-TH 3, CL. II BRIDGE NO.-9

BEGINNING AT A POINT APPROXIMATELY 0.436 MILES NORTHWESTERLY OF THE INTERSECTION OF VT. ROUTE 100 AND TH 3 AND PROCEEDING NORTHWESTERLY ALONG TH 3 FOR 0.322 MILES.

LENGTH OF ROADWAY 1426.00 FEET = 0.270 MILES
LENGTH OF BRIDGE 274.00 FEET = 0.052 MILES
LENGTH OF PROJECT 1700.00 FEET = 0.322 MILES

WORK TO BE PERFORMED UNDER THIS CONTRACT CONSISTS OF REPLACEMENT OF BRIDGE NO. 9 OVER THE LAMOILLE RIVER AND ROADWAY WORK WHICH INCLUDES GRADING, DRAINAGE, SUBBASE AND PAVEMENT FOR A TOWN HIGHWAY.

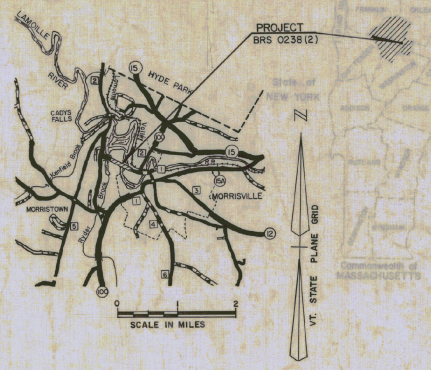

TRAFFIC DATA

EXISTING CONDITIONS (BRIDGE OPEN)

EST. 1983 ADT = 530
EST. 2003 ADT = 730
EST. 2003 DHV = 100
D = 56%
T = 1%
V = 30 MPH

w/ "PROPOSED" MORRISVILLE BY-PASS

EST. 2003 ADT = 610
EST. 2003 DHV = 85

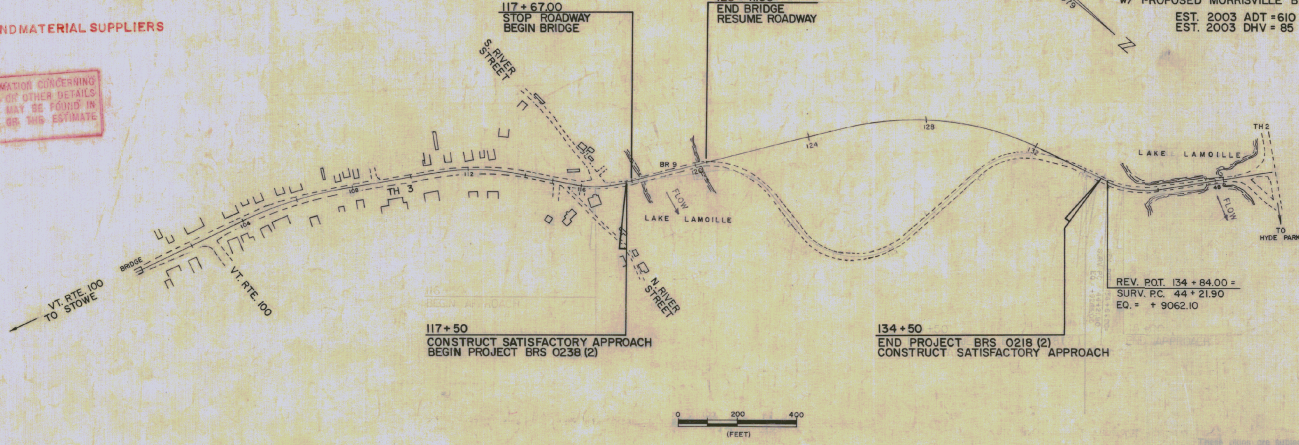

CONVENTIONAL SIGNS

COUNTY LINE
TOWN LINE
LIMITS OF ACCESS
POINT OF ACCESS
FENCE LINE
STONE WALL
TRAVELED WAY
GUARD RAIL
RAILROAD
SURVEY LINE
CULVERT
POWER POLE
TELEPHONE POLE
TREES
CONTROL OF ACCESS
PROPERTY LINE
R.O.W. TAKING LINE
SLOPE RIGHTS
TOP OF CUT
TOE OF SLOPE

DATUM
VERTICAL NGVD 1929
HORIZONTAL N/A

Check plans are believed to meet engineering standards as required by the Federal Highway Administration. It is to be carried on in accordance with these plans and the Standard Specifications for Highway and Bridge Construction, dated March 1960, as approved by the Federal Highway Administration on October 29, 1976, for use on this project, including all subsequent revisions and date revised specifications and special provisions as are incorporated in these plans.

the Director of Engineering and Construction.

S. N. Gage P.E. 12-29-82
Director of Engineering and Construction

SUBMITTED BY OFFICE OF STATE TRANSPORTATION ENGINEER
APPROVED
DEPARTMENT OF TRANSPORTATION
FEDERAL HIGHWAY ADMINISTRATION
APPROVED DIVISION ADMINISTRATOR DATE

BRS 0238(2)

SHEET 1 OF 85

TYPICAL SECTIONS

18"	SUB BASE OF GRAVEL, ITEM 301.15	
3"	PLANT MIXED BASE COURSE, ITEM 303.25	PLACE IN ONE COURSE
1½"	BITUMINOUS CONCRETE PAVEMENT, ITEM 406.25	PLACE IN ONE COURSE
SHOULDERS 1½"	BITUMINOUS CONCRETE PAVEMENT, ITEM 406.25	
0"–24"	SAND BORROW (IN CUT), ITEM 203.31	TO BE PLACED AS NOTED ON THE PLANS OR AS DIRECTED BY THE ENGINEER.
0"–12"	GRANULAR BORROW (IN FILL), ITEM 203.32	

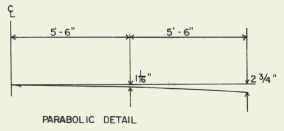

PARABOLIC DETAIL

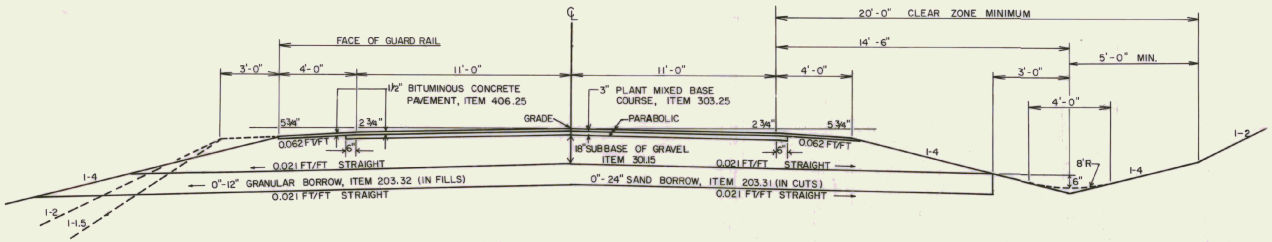

NORMAL SECTION

BUILT AS DESIGNED

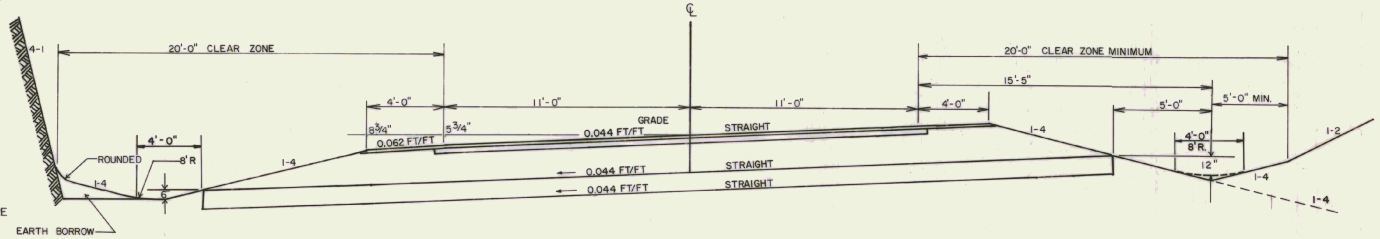

MAXIMUM BANKED SECTION 0.044 FT/FT

FOR FURTHER INFORMATION ON LEDGE TREATMENT SEE STANDARD A-61

GENERAL NOTES

SEED, ITEM 651.10 - TO BE APPLIED AS DIRECTED BY THE ENGINEER

% WT	LBS/A	NAME	PUR %	GERM %
3.33	2	CROWN VETCH	97	75
50.00	30	CREEPING RED FESCUE	98	85
8.33	5	TIMOTHY	99	85
16.67	10	PERENNIAL RYE GRASS (VAR. PENNFINE)	95	85
8.34	5	ALFALFA (VAR. SARANAC)	99	85
8.33	5	BIRDSFOOT TREFOIL (VAR. EMPIRE)	98	85
5.00	3	HIGHLAND BENT GRASS	92	85
100.00	60	LBS/ACRE		

MARKER POSTS, (WOOD OR STEEL AS SPECIFIED) TO BE PLACED AS DIRECTED BY THE ENGINEER.

FERTILIZER, ITEM 651.15 FORMULA 10-20-10 TO BE USED WITH SEED AT THE RATE OF 500 LBS/ACRE

AGRICULTURAL LIMESTONE, ITEM 651.20 TO BE APPLIED AT THE RATE OF 2 TONS/ACRE.

HAY MULCH, ITEM 651.25 TO BE PLACED ON ALL EARTH SLOPES AT THE RATE OF 2 TONS/ACRE.

TOPSOIL, ITEM 653.10 TO BE USED WITH SEED IN RESIDENTIAL AREAS AS DIRECTED BY THE ENGINEER

SEE STANDARD SHEET B-5 FOR TYPICAL SLOPE ROUNDING

SEE STANDARD SHEET D-2 FOR PAY LIMITS OF SAND BORROW WHEN USED IN CONJUNCTION WITH UNDERDRAIN.

ALLOWABLE THICKNESS TOLERANCES
SUB BASE OF GRAVEL ±1"
BITUMINOUS CONCRETE PAVEMENT ± 1/4"
PLANT MIXED BASE COURSE ± 1/2"
OR AS DIRECTED BY THE ENGINEER

RECORD PLANS & MATERIAL SUPPLIERS

CONTRACTOR - BECK & BELLUCCI, INC. NORTH BROWNELL RD. WILLISTON, VT CONTRACT DATED - 9-29-83 CONSTRUCTION BEGAN - 11-14-83 CONSTRUCTION SUSPENDED - 2-10-84 CONSTRUCTION RESUMED - 4-10-84 CONSTRUCTION COMPLETED - 10-31-84 ACCEPTED - 11-16-84 RESIDENT ENGINEER - RONALD L. STANCLIFF RECORD PLANS - GEORGE J. ABAIR GRANULAR BACKFILL, SAND BORROW & SUBBASE OF GRAVEL - FROM PROJECT EXCAVATION PLANT MIX BASE COURSE & BITUMINOUS CONC PAV'T. - PIKE INDUSTRIES, INC JOHNSON, VT. CONC. CLASS "B" & LIGHT WEIGHT - S.T. GRISWOLD CO., INC. REINF STEEL & STEEL PILING (HP 14 X 53) - BETHLEHEM STEEL CORP BETHLEHEM PA. BEARING DEVICES (ALT. "A"), SHEAR CONNECTORS & STRUCTURAL STEEL - BANCROFT & MARTIN INC. SOUTH PORTLAND, ME. WATER REPELLENT - SONNEBORN BUILDING PRODUCTS MASPETH, NY JOINT SEALER (HOT POURED) TRIRAM CORP. FRAMINGHAM, MA. GRANITE BRIDGE CURB - BARRETTO GRANITE CO. MILFORD, N.H. BRIDGE RAILING - AMERICAN BRIDGE RAILING CORP. LYNN, MA. METAL PIPES - ARMCO INC. MIDDLETOWN, OH. BOUNDARY MARKERS & GUARD RAIL - LAFAYETTE & SHELDON INC KELLOGG RD. ESSEX JCT, VT

TOWN OF MORRISTOWN
STATE OF VERMONT
AGENCY OF TRANSPORTATION

SHEET 2 OF 65

DRAINAGE AND ITEM QUANTITY SHEET

STATE OF VERMONT — DEPARTMENT OF HIGHWAYS

PROJECT MORRISTOWN — NO. BRS 0238(2)

Type 'D' corrected 08 Jan 83

APPROXIMATE SUMMARY OF QUANTITIES

EROSION CONTROL	BRIDGE	ROADWAY	GRAND TOTAL	UNIT	ITEM	RNDG.	ITEM NO.
		1	1	LS	CLEARING AND GRUBBING		201.10
		260	260	CY	EXCAVATION & REMOVAL OF ROAD SURFACE & PAVEMENTS		202.15
	1			EA	REMOVAL OF EXISTING SUPERSTRUCTURE		202.20
		220	220	LF	REMOVAL & DISPOSAL OF EXISTING GUARDRAIL	4	202.40
		60,100	60,100	CY	COMMON EXCAVATION	35	203.15
		450	450	CY	SOLID ROCK EXCAVATION	24	203.16
		1250	1250	CY	MUCK EXCAVATION	47	203.20
	60		60	CY	UNCLASSIFIED CHANNEL EXCAVATION		203.27
		300	300	CY	SAND BORROW (EST)		203.30
	46	4754	4800	CY	GRANULAR BORROW		203.32
		1050	1050	CY	ROCK BORROW	43	203.38
		8700	8700	SY	FINE GRADING - SUBGRADE		203.40
36		874	910	CY	TRENCH EXCAVATION OF EARTH		204.20
		80	80	CY	TRENCH EXCAVATION OF ROCK (EST)		204.21
	310		310	CY	STRUCTURE EXCAVATION		204.25
	190	200	390	CY	GRANULAR BACKFILL FOR STRUCTURES (EST)		204.30
		200	200	SY	SCARIFYING EXISTING PAVEMENT	1.4	212.20
181		3819	4000	CY	SUBBASE OF GRAVEL		301.15
		730	730	TON	PLANT MIXED BASE COURSE	3.8	303.25
36		844	880	CY	STRIPPING OF PITS	2	307.10
		3	3	CWT	EMULSIFIED ASPHALT		409.65
		590	590	TON	BITUMINOUS CONCRETE PAVEMENT		406.25
	371	3	374	CY	CONCRETE CLASS B	0.9	501.25
	330		330	CY	CONCRETE CLASS LW		501.40
	1		1	LS	FURNISHING EQUIPMENT FOR DRIVING PILING		504.10
	1000		1000	LF	STEEL PILING (HP 14 X 73)		506.17
	320,500		320,500	LB	STRUCTURAL STEEL (PLATE GIRDER)		506.99
					Alternate Bid Item, See Alternate Bid Item Summary, on this sheet (Rt.)		506.99
	126,200	200	126,400	LB	REINFORCING STEEL	7	507.15
	1		1	LS	SHEAR CONNECTORS (2136 @ 7/8 X 7 STDS)		508.15
	46		46	GAL	WATER REPELLENT		514.10
		875	875	SY	SHEET MEMBRANE WATERPROOFING		519.20
	1		1	LS	COFFERDAM		530.10
		164	164	LF	18" ACCGMP .064		601.1522
		40	40	LF	15" CGMP .064		601.1769
		1	1	EA	METAL END SECTION FOR 18" ACCGMP .064		601.6222
		1	1	EA	CHANGING ELEVATION OF SEWER MANHOLE		604.401
		650	650	LF	6" UNDERDRAIN (EST)		605.10
		60	60	LF	6" UNDERDRAIN CARRIER PIPE (EST)		605.15
		3	3	EA	UNDERDRAIN FLUSHING BASINS (EST)		605.95
		30	30	HRS	ROADWAY PATROL MAINTENANCE		607.10
4		6	10	HRS	BULLDOZER RENTAL, TYPE I		608.10
		5	5	HRS	BULLDOZER RENTAL, TYPE II		608.11
		5	5	HRS	POWER GRADER RENTAL		608.15
		1	1	HRS	DRAGLINE RENTAL, TYPE I (EST) NOT A BID ITEM		608.20
		1	1	HRS	DRAGLINE RENTAL, TYPE II (EST) NOT A BID ITEM		608.21
		1	1	HRS	ALL PURPOSE EXCAVATOR TYPE I (EST) NOT A BID ITEM		608.22
		1	1	HRS	ALL PURPOSE EXCAVATOR TYPE II (EST) NOT A BID ITEM		608.26
		1	1	HRS	TRUCK RENTAL (EST) NOT A BID ITEM		608.37
		1	1	M/GAL	DUST CONTROL W/WATER (EST) NOT A BID ITEM		609.10
		1	1	TON	DUST & ICE CONTROL W/CALCIUM CHLORIDE (EST)		609.15
70			70	CY	STONE FILL, TYPE I	7	613.10
600	130		730	CY	STONE FILL, TYPE II	10	613.11
		3	3	GAL	JOINT SEALER HOT POURED		614.10
	551		551	LF	GRANITE BRIDGE CURB		616.17
	552		552	LF	BRIDGE RAILING, GALV. BOX BEAM		617.30
		4	4	EA	GUARD RAIL APPROACH SECTION TYPE I		621.50
		6	6	EA	BOUNDARY MARKERS		619.10
		8	8	EA	WOOD MARKER POSTS		619.11
		2	2	EA	REMOVING & RESETTING BOUNDARY MARKERS		619.20
		321	321	LF	GUARDRAIL, STD. STEEL BEAM W/WOOD POSTS, TYPE II		621.28
		4	4	EA	ANCHOR FOR STEEL BEAM GUARDRAIL		621.30
		110	110	HRS	UNIFORMED TRAFFIC OFFICER		630.10
		1400	1400	HRS	FLAG PERSONS		630.15
		1	1	LS	FIELD OFFICE - ENGINEERS		631.10
		2080	2080	HRS	EMPLOYEE TRAINEESHIP		634.10
		1	1	LS	MOBILIZATION		635.10
		4025	4025	LF	4" REFLECTORIZED WHITE LINES		646.11
		3900	3900	LF	4" REFLECTORIZED YELLOW LINES		646.11
250			250	LBS	SEED		651.10
38			38	LBS	SEED, WINTER RYE		651.14
2100			2100	LBS	FERTILIZER		651.5
8			8	TONS	AGRICULTURAL LIMESTONE		651.20
9			9	TONS	HAY MULCH		651.25
600			600	SY	EROSION MATTING	4	654.10
		20	20	SF	TRAFFIC SIGNS, TYPE A		675.10
		56	56	LBS	TRAFFIC SIGN POSTS, TYPE A		675.20
		70	70	LBS	TRAFFIC SIGN POSTS, TYPE C		675.30
		14	14	SF	REMOVING SIGNS		675.50
		16	16	LF	GUARD RAIL, PLANK W/WOOD POSTS		621.10

DETAILED SUMMARY OF QUANTITIES

QUANTITY	UNIT	ITEM
		FINE GRADING - SUBGRADE
7130	SY	MAINLINE
328	SY	BEGIN APPROACH
442	SY	END APPROACH
756	SY	DRIVES = 278 SY. DRIVE @ 126+00 Lt. + 478 SY. SIDELINE APPROACH @ 131+00 Rt.
44	SY	ROUND
8700	SY	TOTAL
		COMMON EXCAVATION
58381	CY	MAINLINE
211	CY	BEGIN APPROACH
537	CY	END APPROACH
26	CY	DRIVES
583	CY	CUT TO FILL TRANSITIONS
300	CY	EXCAV. FOR ESTIMATED SAND BORROW
62	CY	ROUNDING
60,100	CY	TOTAL
		TRENCH EARTH
336	CY	DRAIN SHEET
480	CY	UNDERDRAIN (EST)
45	CY	UNDERDRAIN CARRIER PIPE (EST)
5	CY	ROUND
874	CY	TOTAL
		SUBBASE OF GRAVEL
3100	CY	MAINLINE
182	CY	BEGIN APPROACH
265	CY	END APPROACH
224	CY	DRIVES = 79 cy. DRIVE @ 126+00 Lt. + 145 cy. SIDELINE APPROACH @ 131+00 Rt.
48	CY	ROUND
3819	CY	TOTAL
		BITUMINOUS CONCRETE PAVEMENT
123	TONS	FROM BRIDGE QUANTITY SHEET
412	TONS	MAIN LINE
23	TONS	BEGIN APPROACH
28	TONS	END APPROACH
4	TONS	ROUND
590	TONS	TOTAL
		STONE FILL TYPE II
130	CY	FROM BRIDGE QUANTITY SHEET
590	CY	SLOPE 120+41 LT - 122+35 LT
10	CY	ROUNDING
730	CY	TOTAL
		GRANULAR BACKFILL FOR STRUCTURES
120	CY	ROADWAY DESIGNED
80	CY	ESTIMATED
200	CY	TOTAL
		TEMPORARY EROSION CONTROL
36	CY	TRENCH EXCAVATION OF EARTH
181	CY	SUBBASE OF GRAVEL
36	CY	STRIPPING OF PITS
4	HRS	BULLDOZER RENTAL
2	HRS	ALL PURPOSE EXCAVATOR RENTAL TYPE I
2	HRS	ALL PURPOSE EXCAVATOR RENTAL TYPE II
16	CY	STONE FILL TYPE I
38	LBS	SEED WINTER RYE
1	TONS	HAY MULCH
64	SY	EROSION MATTING
		GRANULAR BORROW (Includes 1.15 factor)
2479	CY	ROADWAY DESIGNED (SEE EARTHWORKS)
1563	CY	ROADWAY EST. FOR CAPPING FILLS
672	CY	CUT TO FILL TRANSITIONS
46	CY	FROM BRIDGE QUANTITY SHEET
40	CY	ROUND
4800	CY	TOTAL

DRAINAGE STRUCTURES

STA.	POS.	OLD CULVERT	TYPE IN	TYPE OUT	A.C.C.G.M.P. D	L	TH.	C.G.M.P. D	L	TH.	C.A.A.C.P. D	L	TH.	R.C.P. D	L	CL.	STONE FILL	CHANGE ELEV. I	CHANGE ELEV. II	EROS'N MATTING	TRENCH EXCAV. EARTH	TRENCH EXCAV. ROCK	MARKER POSTS LT	MARKER POSTS RT	GRANULAR BACKFILL	CONC. B	REINF. STEEL	DI GRATE	DEPTH DI	DITCHES IN	DITCHES OUT	REMARKS
117+30	LT		SMH					15	40	.064								1			8		1									
117+32~																																
117+90	LT	15" CGMP																			16											15" CULVERT - REMOVE & PLUG MH W/ CONCRETE
120+41	LT	122+35 LT																														
121+65	RT	122+50 RT															590								120							SLOPE PROTECTION FILTER BLANKET
121+85	RT	122+05RT																			28											SPECIAL DITCH W/SFI
122+20	RT	122+50LT															34				7											SPECIAL DITCH W/SFI
122+50	LT	125+25 LT	RCDT		18	68	.064										7				24		1	1		2.1	193	B	4'-0"			
122+50	RT	125+25 RT																		122												EROSION MATTING
127+65	LT	130+00 LT																		122												EROSION MATTING
128+50	LT	130+00 LT																		67	58											SPECIAL DITCH
																																EROSION MATTING
128+00	RT	130+39 RT																			107											SPECIAL DITCH
128+50	RT	130+39 RT																		84												EROSION MATTING
131+75	RT	131+84 RT																		137												EROSION MATTING
130+50	RT	131+00 LT	MES		18	96	.064										9				38		1	1								SFI @ INLET & OUTLET
TOTALS			MES 1-18"		18"	164	.064	15	140	.064							47	590	1	532	336		3 5	2	120	2.1	193	B				

ALTERNATE BID ITEM SUMMARY

BRIDGE	GRAND TOTAL	UNIT	ITEM	ITEM NO.
			ALTERNATE A	
8	8	EA	BEARING DEVICE ASSEMBLY PREFORMED FABRIC PADS AT ABUTMENTS	506.99
4	4	EA	BEARING DEVICE ASSEMBLY STEEL AT PIER	506.99
			ALTERNATE B	
8	8	EA	BEARING DEVICE ASSEMBLY FLOATING POT TYPE BEARING AT ABUTMENTS	506.99
4	4	EA	BEARING DEVICE ASSEMBLY FLOATING POT TYPE BEARING AT PIER	506.99
			ALTERNATE C	
8	8	EA	BEARING DEVICE ASSEMBLY PREFORMED FABRIC PADS AT ABUTMENTS	506.99
4	4	EA	BEARING DEVICE ASSEMBLY FLOATING POT TYPE BEARING AT PIER	506.99

GUARDRAIL, PLANK W/WOOD POSTS

STA.	LENGTH
121+90 Rt.	16'

REMOVAL AND DISPOSAL OF EXISTING GUARDRAIL

STA. - STA.	POS.	LENGTH
117+49 - 117+64	LT	15'
120+25 - 120+75	LT	50'
117+58 - 117+69	RT	11'
120+25 - 120+90	RT	65'
120+75 - 121+50	RT	75'
TOTAL		216'

GUARD RAIL STANDARD STEEL BEAM W/WOOD POSTS, TYPE II ITEM 621.28

ANCHOR — G-W END TREATMENT

STA. - STA.	POS.	LENGTH	+2 FT.
117+04 - 117+16	LT	12.5' /	2'
117+04 - 117+16	RT	12.5' /	2'
120+92 - 123+36	LT	250' /	2'
120+92 - 121+24	RT	37.5' /	2'
SUB TOTAL		312.5' 4	8'
TOTAL		321	

GUARD RAIL APPROACH SECTION, TYPE I ITEM 621.90

STA. - STA.	POS.	EA
117+16 - 117+66	LT	1
117+16 - 117+66	RT	1
120+42 - 120+92	LT	1
120+42 - 120+92	RT	1
TOTAL		4

TYPE OF CONSTRUCTION:

STATIONS FROM	STATIONS TO	PAVEMENT WIDTHS SHLDR	PAVEMENT WIDTHS TRAV. WAY	PAVEMENT WIDTHS SHLDR	EQUATIONS +	EQUATIONS −	REMARKS
117+50	117+67.00	4'	11' & 11'	4'	—	—	ROADWAY
117+67.00	120+41.00	4'	11' & 11'	4'	—	—	BRIDGE
120+41.00	134+50	4'	11' & 11'	4'	—	—	ROADWAY

LENGTH OF PROJECT

STA.	STA.	FEET	MILES	REMARKS
117+50	117+67	17	.003	ROADWAY
117+67	120+41	274	.052	BRIDGE
120+41	134+50	1409	.267	ROADWAY
TOTAL		1700	.322	

MORRISTOWN

PROJECT BRS NO. 0238(2)

SHEET 3 OF 88

D-18

EARTHWORK

V.C.	% GRADE	STATION	GRADES ELEVATION ON TANGENT	GRADES ELEVATION ON V. CURVES	GRADES CORR. V.C.	DIST.	TOTAL EXCAVATION EARTH AND ROCK AREA	TOTAL EXCAVATION EARTH AND ROCK CU. YDS.	Rock AREA	Rock CU. YDS.	EMBANKMENT AREA	EMBANKMENT CU. YDS.	BASE AREA	BASE CU. YDS.
		116+00												
		+50	600.40	600.40	0		BUTT 38							
	-3.8000 %	+74	599.49	599.64	+0.15									
		+84	599.11	599.42	+0.31	50		100					C 457 R 246 F 204	
		+87	598.99	599.36	+0.37								R.FAC 0.495 F FAC 1.15	
		117+00	598.50	599.17	+0.67								EXC 394	
		+20	598.81	599.05	+0.24	20	70	72	0	24	0	3		
		+30	598.97	599.08	+0.11	10	125	64	65	40	7	18		
		+40	599.13	599.16	+0.03	10	222	101	152	78	88	69		
						10	321	120	270	104	285	114		
		CONSTRUCT SATISFACTORY APPROACH BEGIN PROJECT BRS 0238(2)												
		+50	599.28	599.28	0		328		290		330			
		+58	599.41			8	360	102	300	87	385	106		
		+64	599.50			6								
		+67	599.55	Stop Roadway		9	260	103	260	93	54	73		
		+75	599.67	Begin Bridge									C 205 R 180 F 179	
		118+00	600.06										RFAC 0.495 FFAC 1.15 EXC 88	
		+50	600.84											
		119+00	601.63											
		+50	602.41											
		120+00	603.19											
		+21	603.52											
		+25	603.58											
		+36	603.74	603.74	0.0									
	+1.5632%	+41	603.83	603.83	0.0	End Bridge - Resume Roadway								
		+50	603.97	603.99	+0.02									
		+75	604.36	604.51	+0.15									
		+91	604.61	604.90	+0.29	9					0	50		
		121+00	604.75	605.13	+0.38	35					302	1706		
		+35	605.30	606.21	+0.91	15					1540	3063		
		+50	606.08	606.74	+0.66	50	0				1768	1146		
		122+00	608.68	608.79	+0.11	35					0			
		+35	610.50	610.50	0	15	390	361						
		+50	611.28	611.27	-0.01	50	3725	3810						
		123+00	613.88	613.65	-0.23	35	6750	6789					C 50185 F 5965 F FAC 1.15 EX.C 43325	
		+35	615.70	615.15	-0.55	15	7494	3957						
		+50	616.48	615.76	-0.72	50	7180	13,587						
		124+00	619.08	617.59	-1.49		6070	12,269						
		+50	621.68	619.15	-2.53		4095	9412						
	+5.2000 %	125+00	624.28	620.44	-3.84			4,500			0	19		
		+50	626.88	621.45	-5.43		765	708			20	554		
		126+00	629.48	622.19	-7.29		0				578	1236		
		+50	632.08	622.65	-9.43						757	1374		
		127+00	634.68	622.84	-11.84						727	1334		
		+35	636.50	622.81	-13.69						714	1289		
		+50	635.64	622.76	-12.88						678	1128		
		128+00	632.76	622.40	-10.36						540			
		+50	629.89	621.78	-8.11	50								

CARRIED FORWARD 5208 6934

COLUMN FOOTINGS 55598 180 13078

EARTHWORK

V.C.	% GRADE	STATION	GRADES ELEVATION ON TANGENT	GRADES ELEVATION ON V. CURVES	GRADES CORR. V.C.	DIST.	TOTAL EXCAVATION EARTH AND ROCK AREA	TOTAL EXCAVATION EARTH AND ROCK CU. YDS.	EMBANKMENT AREA	EMBANKMENT CU. YDS.	BASE AREA	BASE CU. YDS.
		128+50	629.89	621.78	-8.11				540		C 5208	
		129+00	627.02	620.88	-6.14	50			444	511	F 9569	
		+50	624.14	619.69	-4.45					926	FILL F 1.15	
		130+00	621.27	618.25	-3.02				556	798	EXF 5796	
		+50	618.39	616.52	-1.87				306	150		
		131+00	615.52	614.52	-1.00				180	319		
		+50	612.64	612.24	-0.40				164	724	C 2963 F 3147	
		132+00	609.77	609.70	-0.07		0	6	618	980	FILL F 1.15	
		+35	607.76	607.76	0		6	75	440	512	EXF 656	
		+50	606.90				75	284	113			
		133+00	604.02				232	641	20	123		
		+50	601.15				460	1011	2	20		
		134+00	598.27				632	946	3	5		
		+50	595.40	595.40	0	50	390		12	14		
		END PROJECT BRS 0238(2) CONSTRUCT SATISFACTORY APPROACH										
		134+81.00= 141+21.90	593.45	593.67	+0.12			315		14		
		Rev Surv Rpt & SUM. PC 140+19.06				34		110	11			
		+32.9	592.82	593.03	+0.21	28.1		97		6		
		141+50	592.15	592.23	+0.08			77	0		C 537 F 20	
		+77.9	591.06	0	50			125			FILL F 1.15	
		145+0	590.20				58 BUTT				EXC 514	

STATION	MUCK EXCAV	ROCK FILL	GRANULAR BORROW
120+41			564 BUTT
+50	9		188
+75	25		564
+91	16		1273
121+00	9		1112
+25	25		320
+50	25		810
122+00	50		375
+35	35		0
	322 BUTT	360 BUTT	
	298	333	
	322	360	
	493	586	
	210	273	
	285	415	
	98	175	
	127	227	
	98	175	
	BUTT	BUTT	
TOTALS	1203	1561	2156

CARRIED FORWARD

COLUMN FOOTINGS 2963 5782

EARTHWORK SUMMARY

STATE OF VERMONT DEPARTMENT OF HIGHWAYS

SUMMARY OF BALANCES

STATION TO STATION		TOTAL EXCAV. EARTH & ROCK CUBIC YARDS	ROCK EXCAV. CUBIC YARDS	EMBANKMENT CUBIC YARDS	EXCESSES CUT	EXCESSES FILL	ACCUMULATIVE EXCESSES CUT	ACCUMULATIVE EXCESSES FILL	ROCK FILL	MUCK EXCAV. CUBIC YARDS
117+50	120+00	205	180	179	88		88			
120+00	125+00	50185	0	5965	43325		43413		1561	1203
125+00	130+00	5208	0	9569		5796	37617			
130+00	134+50	2963	0	3147		656	36961			
ROADWAY TOTALS		58561	180	18860					1561	1203
BEGIN APPROACH		457	246	204	344		37305			
END APPROACH		537	0	20	514		37819			
APPR. AT 131+00 RT		22	0	186		192	37627			
DRIVES		4	0	625		715	36912			
CUT TO FILL		583	0	0	583		37495			
PROJECT TOTALS		60164	426	19895					1561	1203

SUMMARY BY COLUMNS

SHEET NO.	COL. NO.	EXCAVATION TOTAL CU. YDS.	EXCAVATION ROCK CU. YDS.	EMBANKMENT CUBIC YARDS	ROCK FILL	MUCK EXCAV
4	1	55598	180	13078		
	2	2963		5782	1561	1203
TOTAL		58561	180	18860		
BEG. APP		457	246	204		
END APP		537		20		
APP @ 131 RT		22		186		
DRIVES		4		625		
CUT - FILL TRANS.		583				
TOTAL		60164	426	19895	1561	1203

REMARKS

EARTH AND ROCK EXCAVATION	60164
SOLID ROCK EXCAVATION	426
EARTH EXCAVATION	59738
PLANIMETERED FILL	19895
LESS FACTORED SOLID ROCK (1.3)	554
LESS DISPLACEMENT OF ANY LARGE STRUCTURES	
NET PLANIMETERED FILL	19341
FACTOR (0.15)	2901
PLANIMETERED FILL INCLUDING FACTOR	22242
MATERIALS AVAILABLE FOR FILLS	
EARTH EXCAVATION	59738
CHANNEL EXCAVATION 40% of 60	24
UNDERDRAIN EXCAVATION	
STRUCTURE EXCAVATION 60% of 310	186
UNSUITABLE MATERIAL (MUCK)	1203
TOTAL MATERIAL AVAILABLE FOR FILL	61151
TOTAL FILL INCLUDING FACTOR	22242
TOTAL MATERIAL FOR FILL	
BORROW	
WASTE	38909
ROCK FILL	1561
FACTORED ROCK (1.3)	554
ROCK BORROW	1007

PROJECT MORRISTOWN

PROJECT MORRISTOWN NO BRS 0233(2)

SHEET 4 OF 25 SHEETS

D-2

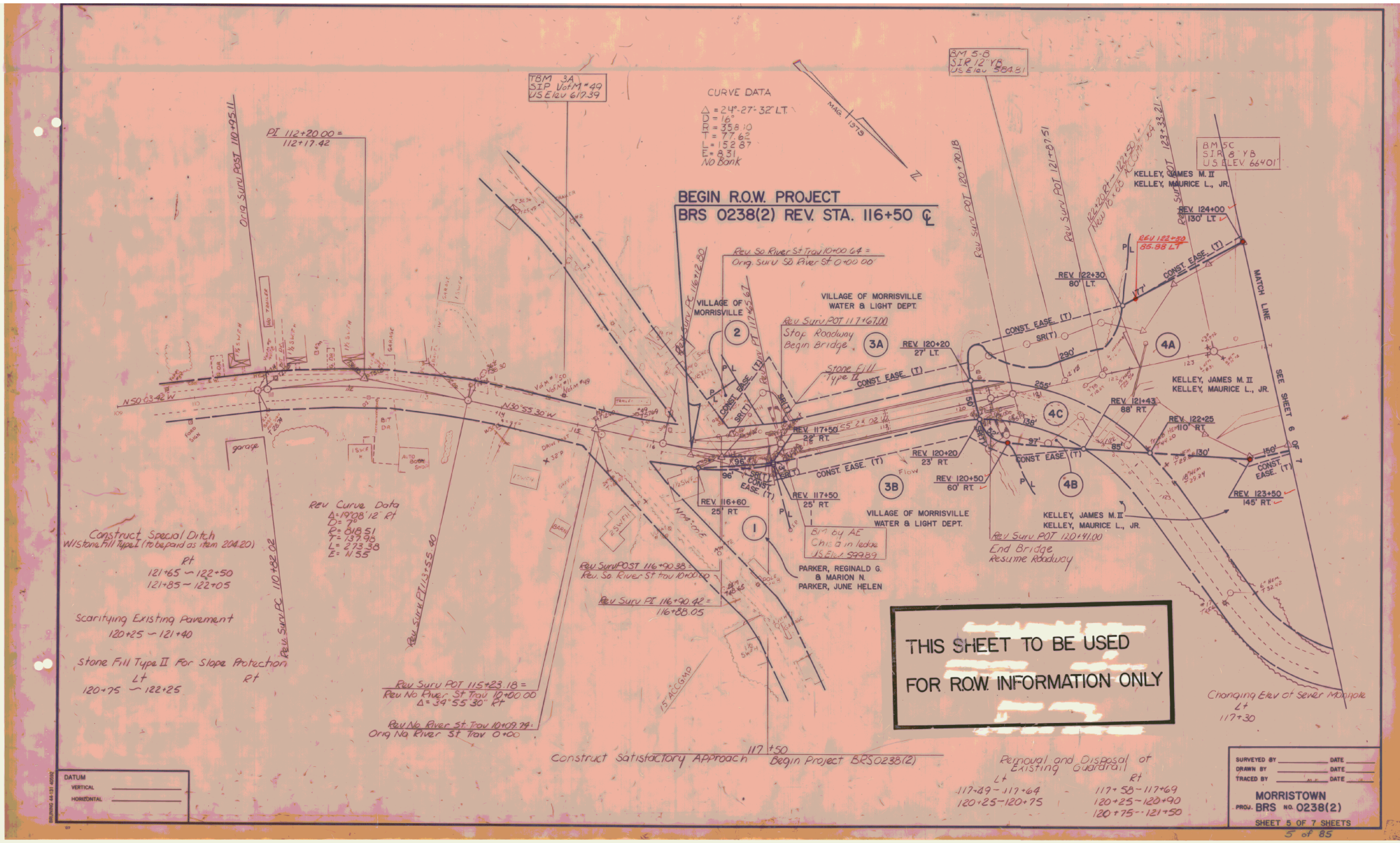

BEGIN R.O.W. PROJECT
BRS 0238(2) REV. STA. 116+50 ℄
CURVE DATA
Δ = 24°-27'-32" LT.
D = 16°
R = 358.10
T = 77.62
L = 152.87
E = 8.31
No Bank
TBM 3A
SIP VofM #49
US Elev 617.39
BM 5-B
SIR 12" YB
US Elev 584.81
BM 5C
SIR 8" YB
US ELEV 664.01
PI 112+20.00 =
112+17.42
Orig Surv POST 110+95.11
Rev Surv PC 110+82.02
Rev Surv PT 113+55.40
Rev Surv POST 116+90.38 =
Rev. So. River St Trav 10+00.00
Rev Surv PI 116+90.42 =
116+88.05
Rev Surv POST 115+23.18 =
Rev No River St Trav 10+00.00
Δ = 34°55'30" Rt
Rev No River St Trav 10+09.74 =
Orig No River St Trav 0+00
Rev So River St Trav 10+00.64 =
Orig. Surv So River St 0+00.00
Rev Surv PC 116+12.80
Rev Surv PT 117+65.67
Rev Surv POT 117+67.00
Stop Roadway
Begin Bridge
Stone Fill Type II
VILLAGE OF MORRISVILLE
VILLAGE OF MORRISVILLE WATER & LIGHT DEPT.
VILLAGE OF MORRISVILLE WATER & LIGHT DEPT.
BM by AE
Chis a in ledge
US Elev 599.89
PARKER, REGINALD G. & MARION N. PARKER, JUNE HELEN
Rev Surv POT 120+70.18
Rev Surv POT 121+87.51
Rev Surv POT 123+33.21
Rev Surv POT 120+41.00
End Bridge
Resume Roadway
KELLEY, JAMES M. II
KELLEY, MAURICE L., JR.
REV. 124+00
130' LT.
REV 122+50
85.88 LT
REV. 122+30
80' LT.
REV. 120+20
27' LT.
REV. 121+43
88' RT.
REV. 122+25
110' RT.
REV. 120+20
23' RT.
REV. 120+50
60' RT.
REV. 123+50
145' RT.
REV. 117+50
22' RT.
REV. 117+50
25' RT.
REV. 116+60
25' RT.
CONST. EASE. (T)
SR(T)
MATCH LINE
SEE SHEET 6 OF 7
N 50°03'42" W
N 30°55'30" W
garage
Rev Curve Data
Δ = 19°08'12" Rt
D = 7°
R = 818.51
T = 137.98
L = 273.38
E = 11.55
Construct Special Ditch
W/Stone Fill Type I (to be paid as item 204.20)
Rt
121+65 ~ 122+50
121+85 ~ 122+05
Scarifying Existing Pavement
120+25 ~ 121+40
Stone Fill Type II For Slope Protection
Lt
120+75 ~ 122+25
Rt
15" ACCGMP
Construct Satisfactory Approach
117+50
Begin Project BRS 0238(2)
Removal and Disposal of Existing Guardrail
Lt
117+49 - 117+64
120+25 - 120+75
Rt
117+58 - 117+69
120+25 - 120+90
120+75 - 121+50
Changing Elev of Sewer Manhole
Lt
117+30
THIS SHEET TO BE USED
FOR R.O.W. INFORMATION ONLY
DATUM
VERTICAL
HORIZONTAL
SURVEYED BY
DRAWN BY
TRACED BY
DATE
MORRISTOWN
PROJ. BRS NO. 0238(2)
SHEET 5 OF 7 SHEETS
5 of 85

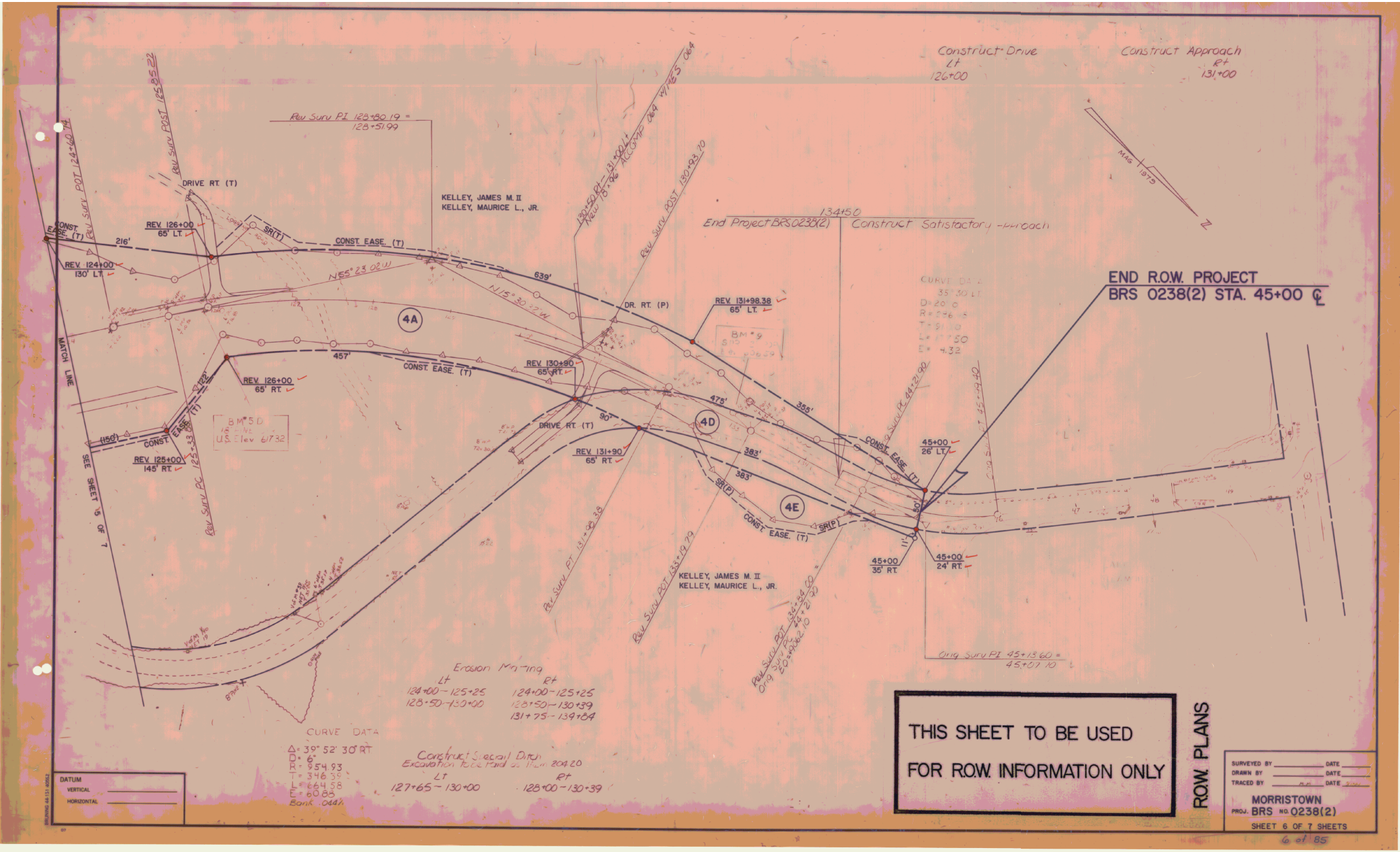

Construct Drive
Lt
126+00
Construct Approach
Rt
131+00
Rev Surv PI 128+80.19 =
128+51.99
Rev Surv POST 125+85.22
Rev Surv POST 124+60.74
DRIVE RT. (T)
KELLEY, JAMES M. II
KELLEY, MAURICE L., JR.
130+50 Rt - 131+00 Lt
New 18"x96" ACCOMP 064 W/MES 064
Rev Surv POST 130+93.70
134+50
End Project BRS 0238(2)
Construct Satisfactory Approach
MAG 1979
N
END R.O.W. PROJECT
BRS 0238(2) STA. 45+00 ℄
CONST. EASE. (T)
216'
REV. 126+00
65' LT.
SR(T)
CONST. EASE. (T)
REV. 124+00
130' LT.
N55°23'02"W
639'
N15°30'22"W
DR. RT. (P)
REV. 131+98.38
65' LT.
4A
457'
CONST. EASE. (T)
REV. 130+90
65' RT.
REV. 126+00
65' RT.
MATCH LINE
BM #5D
18" PINE
U.S. Elev 617.32
DRIVE RT. (T)
90'
475'
355'
4D
383'
383'
SR(P)
4E
CONST. EASE. (T)
SR(P)
CONST. EASE. (T)
45+00
26' LT.
45+00
35' RT.
45+00
24' RT.
REV. 125+00
145' RT.
SEE SHEET 5 OF 7
Rev Surv PC 125+33.88
Rev Surv PT 131+98.38
Rev Surv POT 133+19.79
KELLEY, JAMES M. II
KELLEY, MAURICE L., JR.
Rev Surv POT 134+84.00 =
Orig Surv PC 44+21.90
Orig Surv PC 44+21.90
Orig Surv PI 45+13.60 =
45+07.10
Erosion Mating
Lt
124+00 - 125+25
128+50 - 130+00
Rt
124+00 - 125+25
128+50 - 130+39
131+75 - 134+84
CURVE DATA
Δ = 39° 52' 30" RT
D = 6°
R = 954.93
T = 346.39
L = 664.58
E = 60.88
Bank .044%
Construct Special Ditch
Excavation to be Paid as Item 204.20
Lt
127+65 - 130+00
Rt
128+00 - 130+39
DATUM
VERTICAL
HORIZONTAL
THIS SHEET TO BE USED
FOR R.O.W. INFORMATION ONLY
R.O.W. PLANS
SURVEYED BY
DATE
DRAWN BY
DATE
TRACED BY
DATE
MORRISTOWN
PROJ. BRS NO. 0238(2)
SHEET 6 OF 7 SHEETS
6 of 85

STATE OF VERMONT
AGENCY OF TRANSPORTATION
RIGHT-OF-WAY PLANS
DETAIL SHEET

TABLE OF PROJECT PROPERTY ACQUISITION

PARCEL NO.	GRANTOR	SHEET NO.	BEGINNING STATION	ENDING STATION	TAKING	REM.	RIGHTS	TITLE TAKEN	DATE	TOWN OR CITY RECORDED	BK.	PG.	REMARKS
1	PARKER, REGINALD G. & MARION N. PARKER, JUNE HELEN	5	REV. 116+60 RT. REV. 117+00 RT. REV. 117+15 RT.	REV. 117+50 RT. REV. 117+55 RT. REV. 117+52 RT.	0.01 A±		CONST. EASE. (T) (0.01 A±) SLOPE (T) (240 S.F.±)	W.D.	1-26-83	MORRISTOWN	78	439-40	240 S.F.± 500 S.F.±
2	VILLAGE OF MORRISVILLE	5	REV. 116+90 LT. REV. 117+10 LT.	REV. 117+33 LT. REV. 117+47 LT.			CONST. EASE. (T) (0.02 A±) SLOPE (T) (0.01 A±)	AGREE.					840 S.F.± 440 S.F.±
3A	VILLAGE OF MORRISVILLE, WATER & LIGHT DEPT.	5	REV. 117+22 LT. REV. 117+33 LT. REV 120+50 LT.	REV. 122+30 LT. REV. 117+82 LT. REV. 122+20 LT.			CONST. EASE. (T) (0.17 A±) SLOPE (T) (0.03 A±) SLOPE (T) (0.10 A±)	AGREE.					 1160 S.F.±
3B			REV. 117+50 RT. REV. 117+52 RT. REV. 120+50 RT.	REV. 117+82 RT. REV. 120+56 RT. REV. 120+38 RT.			SLOPE (T) (390 S.F.±) CONST. EASE. (T) (0.12 A±) SLOPE (T) (200 S.F.±)						
4A	KELLEY, JAMES M. II KELLEY, MAURICE L. JR.	5,6	REV. 120+20 LT. REV. 122+60 LT. REV. 123+20 RT. REV. 126+00 LT. REV. 126+05 LT. REV. 126+07 LT. REV. 128+00 RT. REV. 131+00 RT. REV 131+00 LT. REV. 134+15 LT.	45+00 LT. REV. 124+45 LT. REV. 126+00 RT. REV. 129+88 LT. REV. 127+00 LT. REV. 129+80 RT. 44+85 LT.	4.80 A±	11.00 A±	CONST. EASE. (T) (0.02 A±) CONST. EASE. (T) (0.03 A±) DRIVE (T) CONST. EASE. (T) (0.07 A±) SLOPE (T) (0.04 A±) CONST. EASE. (T) (0.01 A±) DRIVE (T) DRAINAGE (P) CONST. EASE. (T) (0.02 A±)	W.D.		MORRISTOWN			760 S.F.± 1500 S.F.± 2920 S.F.± 1680 S.F.± 450 S.F.± 800 S.F.±
4B		5	REV. 120+20 RT. REV. 120+50 RT.	REV. 121+43 RT. REV. 121+43 RT.	0.05 A±	26.05 A±	CONST. EASE. (T) (0.02 A±)						2100 S.F.± 680 S.F.±
4C		5	REV. 120+20 LT.	REV. 122+25 RT.	0.22 A±		ALL R. T. & I.						TOWN HIGHWAY 3
	PARCEL 4 CONTINUED ON NEXT SHEET												

TABLE OF REVISIONS

REVISION NO.	SHEET NO.	DESCRIPTION OF REVISION	DATE	MADE BY	APPROVED BY
1	3,5,6	Parcel #4 KELLEY, Added "II" after James M. Kelley's name per C.O.# 5525	8-31-82	DBM	
2	4	Parcel #4 KELLEY, Changed Total Remainder To 37.05Ac Per C.O.# 5572 Plans submitted to design 2-22-83	10-1-82	DBM	R.L.S.

MADE BY: N.W.J. DATE 5-5-82

CHECKED BY: R.L.S. DATE 5-5-82

DR. RT. — DRAINAGE RIGHT
DIT. RT. — DITCHING RIGHT
CH. RT. — CHANNEL RIGHT
DRIVE RT. — DRIVE RIGHT
CUL. RT. — CULVERT RIGHT
(D) — DEMOLITION OR REMOVAL
[W] — WATER SOURCES

PRESENT R.O.W.
TAKING WITHOUT ACCESS
TAKING WITHOUT ACCESS ALONG PROPERTY LINES
TAKING WITH ACCESS
(P) PERMANENT EASEMENT
(T) TEMPORARY EASEMENT

LEGEND
CONST. EASE. — CONST. EASEMENT
SR — SR — SLOPE RIGHTS
P/L — P/L — PROPERTY LINE
TOP OF CUT
TOE OF SLOPE

APPROVED James D. Peterson DATE 5-5-82
for CHIEF OF PLANS & TITLES

PROJECT MORRISTOWN
NO. BRS 0238(2)
SHEET 3 OF 7

BRUNING 44-13-40992

STATE OF VERMONT
AGENCY OF TRANSPORTATION
RIGHT-OF-WAY PLANS
DETAIL SHEET

M

TABLE OF PROJECT PROPERTY ACQUISITION

PARCEL NO.	GRANTOR	SHEET NO.	BEGINNING STATION	ENDING STATION	TAKING	REM.	RIGHTS	TITLE TAKEN	DATE	TOWN OR CITY RECORDED	BK.	PG.	REMARKS
	PARCEL 4 CONTINUED FROM PREVIOUS SHEET												
4D		6	REV 130+90 RT.	45+00 RT.	0.49 A±		ALL R. T. & I.						TOWN HIGHWAY 3
4E		6	REV. 131+90 RT. REV. 132+65 RT. REV. 132+84 RT.	45+00 RT. 44+45 RT. 44+20 RT.	0.11 A±		CONST. EASE. (T) (0.06 A±) SLOPE (P) (0.14 A±)						2500 S.F.±
				TOTAL	5.47 A±	37.05 A±							
5	VILLAGE OF MORRISVILLE, WATER & LIGHT DEPT.												UTILITY
6	EMCO CATV, INC.												UTILITY
7	NEW ENGLAND TELEPHONE & TELEGRAPH												UTILITY
8	VILLAGE OF MORRISVILLE, SEWER DEPT.												UTILITY

TABLE OF REVISIONS

REVISION NO.	SHEET NO.	DESCRIPTION OF REVISION	DATE	MADE BY	APPROVED BY

MADE BY: N.W.J. DATE 5-5-82

CHECKED BY: R.L.S. DATE 5-5-82

DR. RT. — DRAINAGE RIGHT
DIT. RT. — DITCHING RIGHT
CH. RT. — CHANNEL RIGHT
DRIVE RT. — DRIVE RIGHT
CUL. RT. — CULVERT RIGHT
(D) — DEMOLITION OR REMOVAL
[W] — WATER SOURCES

PRESENT R.O.W.
TAKING WITHOUT ACCESS
TAKING WITHOUT ACCESS ALONG PROPERTY LINES
TAKING WITH ACCESS
(P) PERMANENT EASEMENT
(T) TEMPORARY EASEMENT

LEGEND

CONST. EASE — CONS'T. EASEMENT
SR — SR — SLOPE RIGHTS
P/L — P/L — PROPERTY LINE
TOP OF CUT
TOE OF SLOPE

APPROVED James D. Paterson for CHIEF OF PLANS & TITLES DATE 5-5-82

PROJECT MORRISTOWN
NO. BRS 0238(2)
SHEET 4 OF 7

BRUNING 44-131 40992

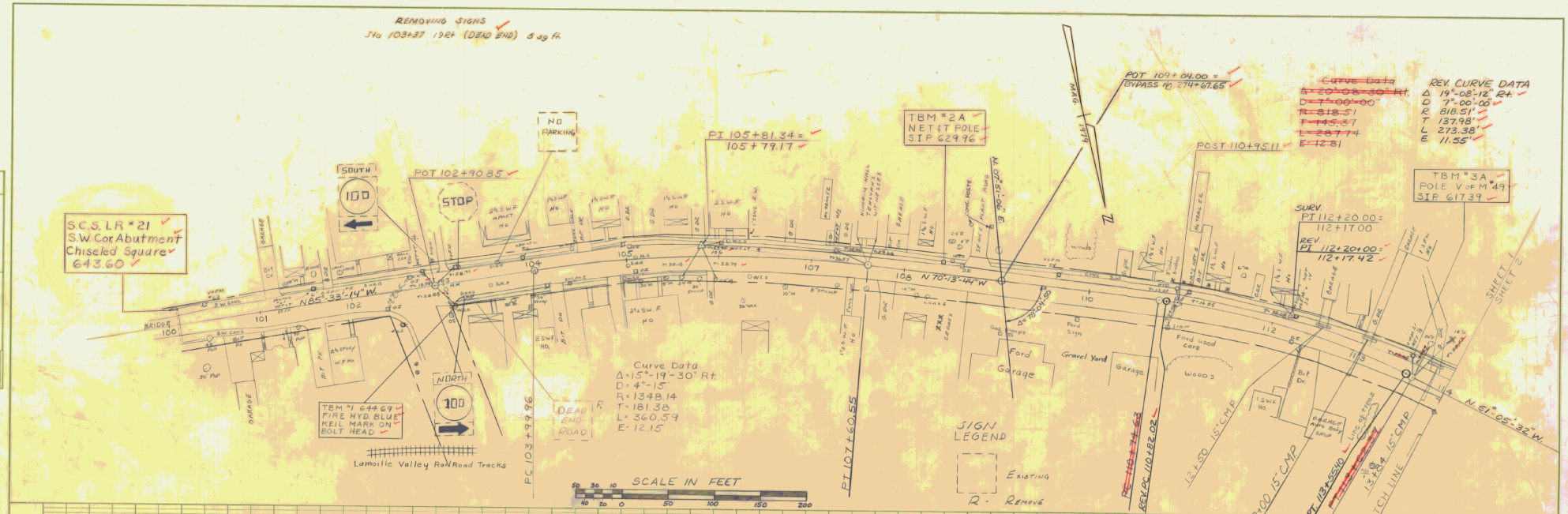

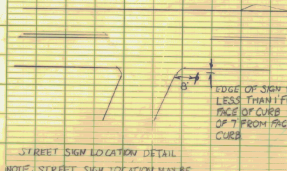

STREET SIGN LOCATION DETAIL

NOTE: STREET SIGN LOCATION MAY BE ADJUSTED IN THE FIELD.

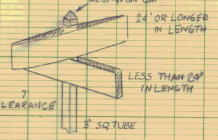

STREET SIGN MOUNTING DETAIL



MATERIALS

The sign base materials use for the signs detailed on this sheet shall be of flat sheet Aluminum 0.125" thickness. These signs shall have a green reflective background with white reflective cut out letters and bordes.

COLORS

The green shall conform with the standard color adopted by the American Association of State Highway Officials and approved by the United States Department of Transportation Federal Highway Administration.

DESIGN

Letters, digits, arrows spacing and text dimentions shall conform with the standard alphabet and designs prescribed in the Manual of Uniform Traffic Control Devices prepared by the National Joint Committee on uniform traffic control devices.

MORRISTOWN
BRS 0238(2)
Sheet 9 of 85

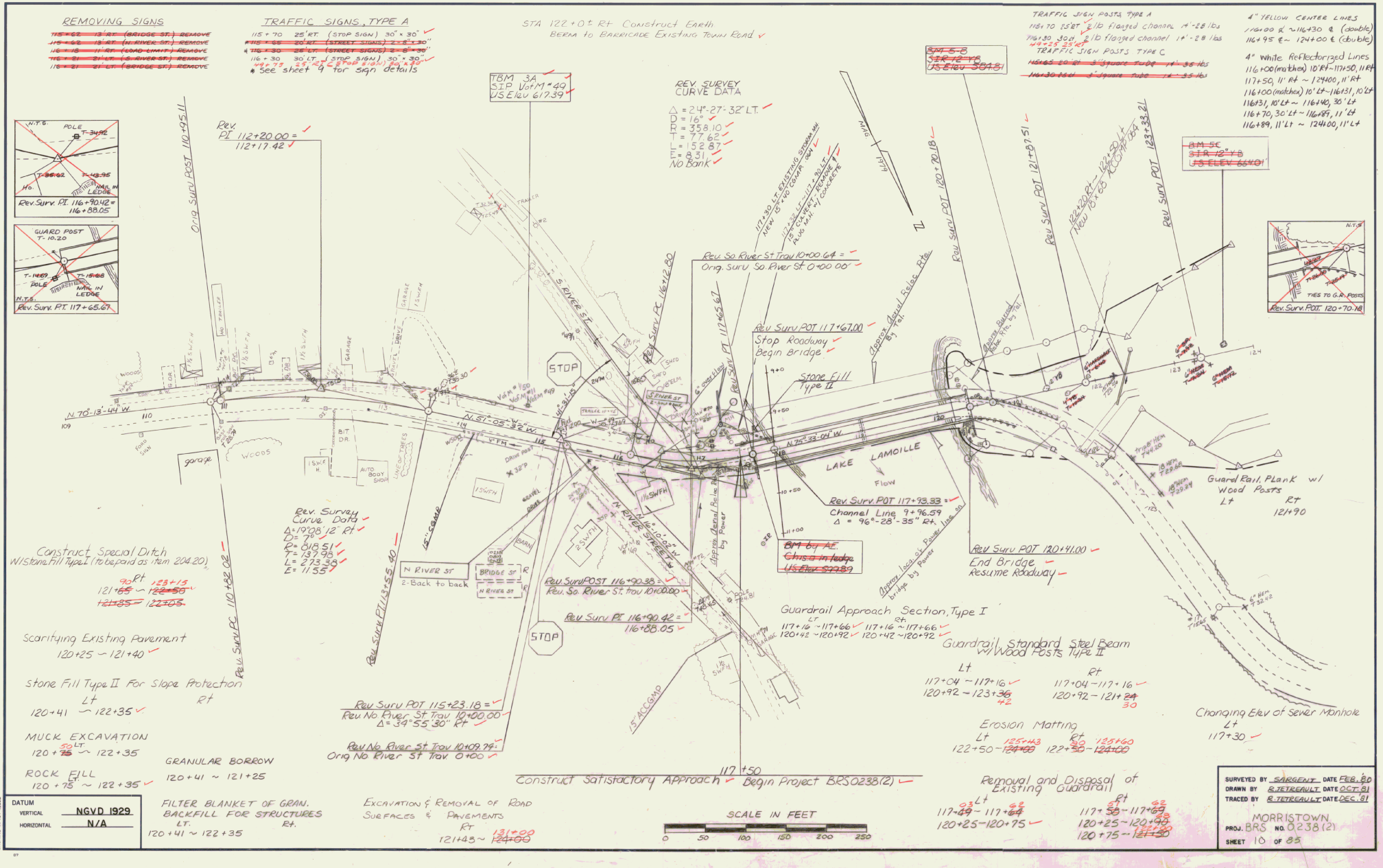
REMOVING SIGNS
115+62 13' RT. (BRIDGE ST.) REMOVE
115+66 13' RT. (N. RIVER ST.) REMOVE
116+18 11' RT. (LOAD LIMIT) REMOVE
116+81 21' LT. (S. RIVER ST.) REMOVE
116+21 21' LT. (BRIDGE ST.) REMOVE
TRAFFIC SIGNS, TYPE A
115+70 25' RT. (STOP SIGN) 30" x 30"
115+65 20' RT. (STREET SIGNS) 2 - 8" x 30"
116+30 25' LT. (STREET SIGNS) 2 - 8" x 30"
116+30 30' LT. (STOP SIGN) 1 - 30" x 30"
* See sheet 9 for sign details
STA 122+0± Rt Construct Earth Berm to Barricade Existing Town Road
TBM 3A SIP Vol M-40 USE Elev 617.39
REV. SURVEY CURVE DATA
Δ = 24°-27'-32" LT.
D = 16°
R = 358.10
T = 77.62
L = 152.87
E = 8.31
No Bank
TRAFFIC SIGN POSTS TYPE A
115+70 to 25' RT. 2 1/2 lb flanged channel 14'-2 lbs
116+30 30' RT. 2 1/2 lb flanged channel 14'-2 lbs
TRAFFIC SIGN POSTS TYPE C
4" YELLOW CENTER LINES
116+00 ℄ ~ 116+30 ℄ (double)
116+95 ℄ ~ 124+00 ℄ (double)
4" White Reflectorized Lines
116+00 (matches) 10' RT ~ 117+50, 11' RT
117+50, 11' RT ~ 124+00, 11' RT
116+00 (matches) 10' LT ~ 116+31, 10' LT
116+31, 10' LT ~ 116+40, 30' LT
116+70, 30' LT ~ 116+89, 11' LT
116+89, 11' LT ~ 124+00, 11' LT
SM-5-B
3 IR-12" I-S
IS ELEV 384.81
BM-5C
3 IR-12" I-S
IS ELEV 654.01
Rev. PI 112+20.00 = 112+17.42
Orig. Surv. POST 110+95.11
Rev. Surv. PC 110+82.02
Rev. Surv. PI 113+55.40
Rev. Surv. PT 114+27.78
Rev. Surv. PC 116+12.80
Rev. Surv. PT 117+65.67
Rev. Surv. POST 120+70.18
Rev. Surv. POST 121+87.51
Rev. Surv. POST 123+33.21
122+50 Rt ~ 122+50 Lt New 10'x 65' RCCM Deck
Rev. Surv. P.I. 116+90.42 = 116+88.05
Rev. Surv. P.T. 117+65.67
Rev. Surv. P.T. 120+70.18
Rev. So. River St Trav 10+00.64 = Orig. Surv. So. River St. 0+00.00
Rev. Surv. POST 117+67.00
Stop Roadway
Begin Bridge
Stone Fill Type II
Rev. Surv. POST 117+93.33 =
Channel Line 9+96.59
Δ = 96°-28'-35" Rt.
BM by AE
This x in ledge
US Elev 392.89
Rev. Surv. POST 120+41.00
End Bridge
Resume Roadway
Rev. Survey Curve Data
Δ = 19°08'12" Rt
D = 79°
R = 018.51
T = 137.98
L = 273.38
E = 11.55
Rev. Surv. POST 116+90.38 =
Rev. So. River St. Trav 10+00.00
Rev. Surv. PT 116+90.42 =
116+88.05
Rev. Surv. POST 115+23.18 =
Rev. No. River St. Trav 10+00.00
Δ = 34°55'30" Rt
Rev. No. River St. Trav 10+09.79 =
Orig. No. River St. Trav. 0+00
117+50
Construct Satisfactory Approach
Begin Project BRS-0238(2)
Construct Special Ditch W/Stone Fill Type I (to be paid as item 204.20)
90 Rt
121+65 ~ 122+50
121+85 ~ 122+05
Scarifying Existing Pavement
120+25 ~ 121+40
Stone Fill Type II For Slope Protection
Lt 120+41 ~ 122+35
Rt
MUCK EXCAVATION
120+50 Lt ~ 122+35
ROCK FILL
120+75 ~ 122+35
GRANULAR BORROW
120+41 ~ 121+25
FILTER BLANKET OF GRAN. BACKFILL FOR STRUCTURES
Lt. 120+41 ~ 122+35
Rt.
EXCAVATION & REMOVAL OF ROAD SURFACES & PAVEMENTS
Rt 121+43 ~ 124+00
Guardrail Approach Section, Type I
Lt 117+16 ~ 117+66 120+42 ~ 120+92
Rt 117+16 ~ 117+66 120+42 ~ 120+92
Guardrail, Standard Steel Beam W/Wood Posts Type II
Lt 117+04 ~ 117+16 120+92 ~ 123+36
Rt 117+04 ~ 117+16 120+92 ~ 121+24
Erosion Matting
Lt 122+50 ~ 125+43
Rt 122+50 ~ 125+60
Removal and Disposal of Existing Guardrail
Lt 117+49 ~ 117+64 120+25 ~ 120+75
Rt 117+50 ~ 117+69 120+25 ~ 120+93 120+75 ~ 121+30
Guard Rail Plank w/ Wood Posts Lt 121+90 Rt
Changing Elev of Sewer Manhole Lt 117+30
Approx. Local St. Power Line by Power
Approx. Local Rd. Power Line by Power
Approx. Buried Fiber Optic Line by Tel.
Approx. Buried Fiber Optic Line by Tel.
LAKE LAMOILLE
Flow
N. 70°-13'-44" W.
N. 51°-05'-32" W.
N. 70°-33'-04" W.
N. 19°-02'-28" W.
N. RIVER STREET
S. RIVER ST.
N. RIVER ST
2-Back to back
BRIDGE ST.
STOP
garage
WOODS
BIT. DR.
AUTO BODY SHOP
LINE OF TREES
BARN
TRAILER
GARAGE
SHED
15' ACCGMP
DATUM
VERTICAL NGVD 1929
HORIZONTAL N/A
SCALE IN FEET
0 50 100 150 200 250
SURVEYED BY SARGENT DATE FEB. '80
DRAWN BY R. TETREAULT DATE OCT. '81
TRACED BY R. TETREAULT DATE DEC. '81
MORRISTOWN
PROJ. BRS NO. 0238(2)
SHEET 10 OF 85
BRUNING 44-131-40992

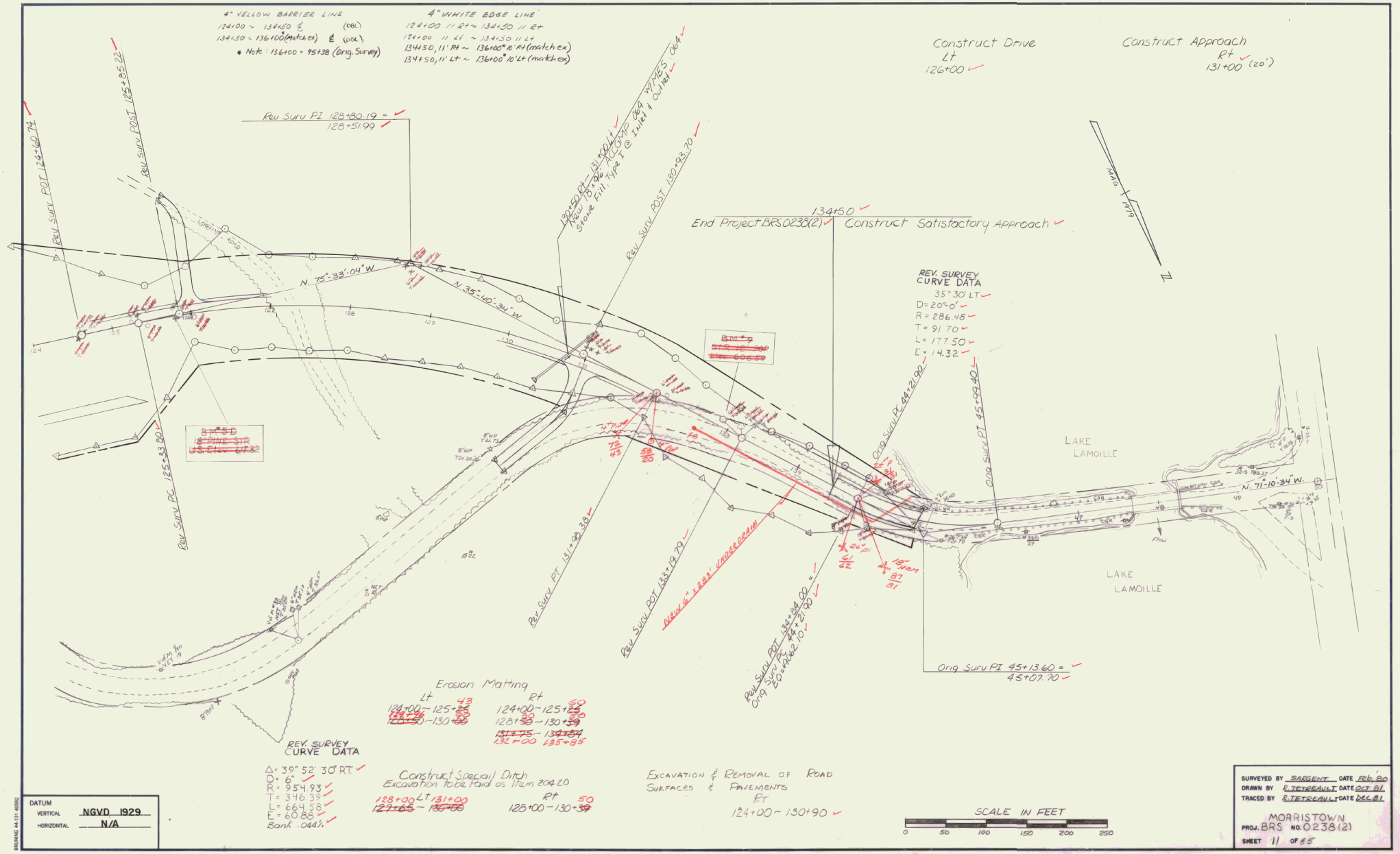
4" YELLOW BARRIER LINE
124+00 ~ 134+50 ℄ (DBL)
134+50 ~ 136+00 (match ex) ℄ (DBL)
* Note: 136+00 = 45+38 (Orig. Survey)
4" WHITE EDGE LINE
124+00 11 Rt ~ 134+50 11 Rt
124+00 11 Lt ~ 134+50 11 Lt
134+50, 11' Rt ~ 136+00* 10' Rt (match ex)
134+50, 11' Lt ~ 136+00* 10' Lt (match ex)
Construct Drive
Lt
126+00
Construct Approach
Rt
131+00 (20')
Rev Surv PI 128+80.19 =
128+51.99
Rev Surv POT 124+60.74
Rev Surv POST 125+85.22
130+50 Rt ~ 131+00 Lt
New 18 x 96 ACCMP .064 W/MES .064
Stone Fill, Type I @ Inlet & Outlet
Rev Surv POST 130+93.70
134+50
End Project BRS 0238(2)
Construct Satisfactory Approach
MAG. 1979
N
REV. SURVEY
CURVE DATA
35° 30' LT
D = 20°-0'
R = 286.48
T = 91.70
L = 177.50
E = 14.32
N. 75°-33'-04" W.
N. 35°-40'-34" W.
Orig Surv PC 44+21.90
Orig Surv PT 45+99.40
LAKE
LAMOILLE
N. 71°-10'-34" W.
Flow
Rev Surv PC 125+33.80
Rev Surv PT 131+98.38
Rev Surv POT 133+19.79
NEW 6" x 233' UNDERDRAIN
Rev Surv POT 134+84.00 =
Orig Surv PC 44+21.90
EQ = +9062.10
Orig Surv PI 45+13.60 =
45+07.70
Erosion Matting
Lt
124+00 ~ 125+25 43
129+76 ~ 130+00 53
Rt
124+00 ~ 125+25 60
128+50 ~ 130+39 50
131+75 ~ 134+84
132+00 135+85
REV. SURVEY
CURVE DATA
Δ = 39° 52' 30" RT.
D = 6°
R = 954.93
T = 346.39
L = 664.58
E = 60.88
Bank .044%
Construct Special Ditch
Excavation to be Paid as Item 204.20
128+00 Lt 131+00
127+65 ~ 130+00
Rt
128+00 ~ 130+39 50
Excavation & Removal of Road
Surfaces & Pavements
Rt
124+00 ~ 130+90
SCALE IN FEET
0 50 100 150 200 250
DATUM
VERTICAL NGVD 1929
HORIZONTAL N/A
SURVEYED BY SARGENT DATE Feb. 80
DRAWN BY R. TETREAULT DATE OCT 81
TRACED BY R. TETREAULT DATE DEC 81
MORRISTOWN
PROJ. BRS NO. 0238(2)
SHEET 11 OF 85
BRUNING 44-131 4/5/92

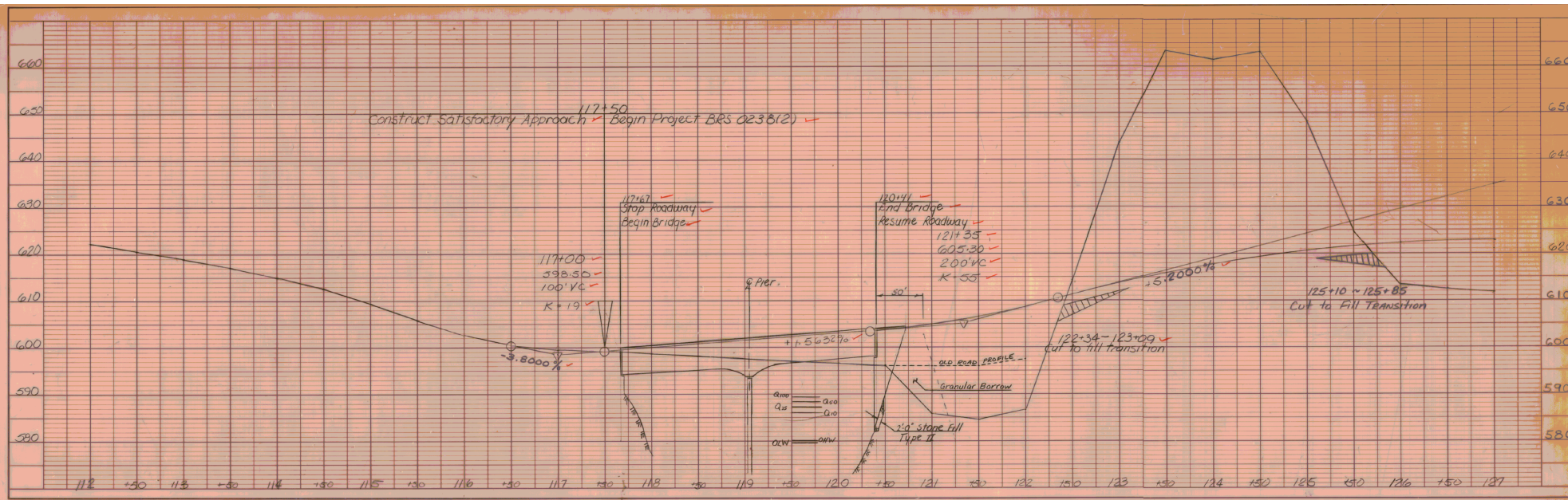

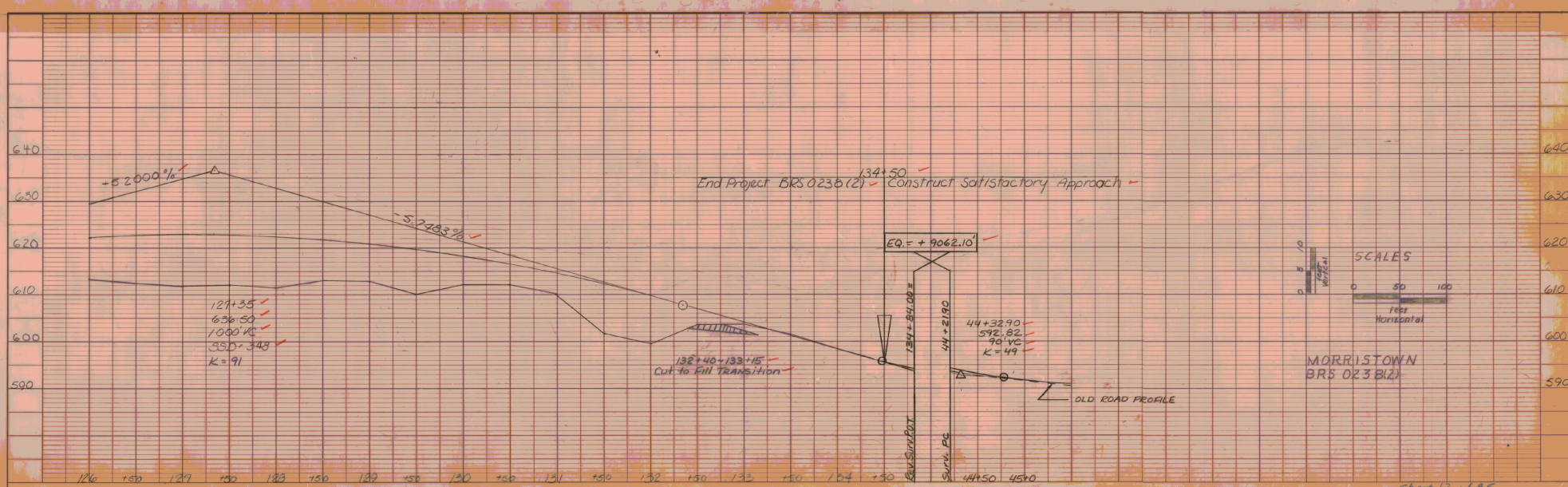

Sheet 12 of 85

K+E PLATE 1, PLAN PROFILE
KEUFFEL & ESSER CO.

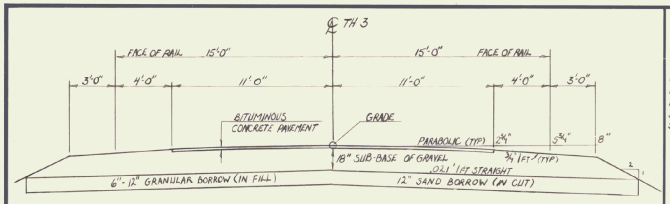

NEW HIGHWAY SECTION — BRIDGE APPROACHES

SCALE: 1¼" = 1'-0"

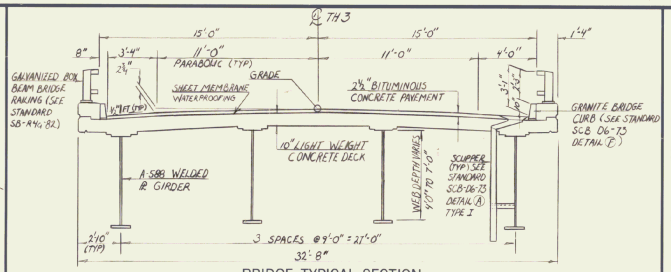

BRIDGE TYPICAL SECTION

SCALE: ¼" = 1'-0"

EXISTING STRUCTURE

1. STRUCTURE TYPE TRUSS OVERALL LENGTH 269'-0" INVENTORY RATING —
2. SPAN LENGTH(S) CENTER TO CENTER OF BEARINGS 261'-0"
3. CLEAR SPAN LENGTH(S) NORMAL TO STREAM 237'-3¾"
4. WATERWAY AREA OF FULL OPENING (NORMAL TO STREAM) 6000 SF ± VERTICAL CLEARANCE ABOVE STREAMBED 24' ± (AVG)
5. WATER SURFACE ELEVATION @ Q 2.33 584.3 WATER SURFACE ELEVATION @ Q —
6. WATER SURFACE ELEVATION AT FLOOD OF RECORD 587.4 YEAR N.A. ESTIMATED DISCHARGE N.A.
7. DOES ALL WATER PASS THROUGH EXISTING STRUCTURE? YES IF NOT, AT WHAT FREQUENCY AND ELEVATION DOES RELIEF OCCUR? N.A.
   ADDITIONAL WATERWAY AREA PROVIDED BY RELIEF N.A.
8. TYPE OF SUBSTRUCTURE FOUNDATION MATERIAL LEDGE
9. DISPOSITION OF STRUCTURE REMOVE

NEW STRUCTURE

STRUCTURE GEOMETRY:

1. STRUCTURE TYPE 2 SPAN CONTINUOUS COMPOSITE I.R. GIRDER OVERALL LENGTH 274'-0"
2. SPAN LENGTH(S) CENTER TO CENTER OF BEARINGS 135'-0" – 135'-0"
3. VERTICAL CLEARANCE ABOVE STREAMBED ~~OR ROAD UNDER~~ 23'± (AVG.)
4. CLEAR SPAN LENGTH(S) NORMAL TO STREAM 132'-6" 132'-6"
5. WATERWAY AREA OF FULL OPENING (NORMAL TO STREAM) 6000 SF ±
6. ARE PROVISIONS TO BE MADE FOR PUBLIC UTILITIES? NO

HYDRAULIC DATA:

1. Q 2.33 7,000 CFS WATER ELEVATION 574.3 VELOCITY 3.5 FPS
   Q 10 11,000 CFS WATER ELEVATION 586.0 VELOCITY 4.4 FPS
   Q 25 14,000 CFS WATER ELEVATION 587.6 VELOCITY 5.0 FPS
   Q 50 17,000 CFS WATER ELEVATION 589.3 VELOCITY 5.5 FPS
   Q 100 20,000 CFS WATER ELEVATION 591.3 VELOCITY 6.0 FPS
2. DRAINAGE AREA 247 sq.mi. CHARACTER OF TERRAIN MOUNTAINOUS to ROLLING
3. ARE THERE OBJECTIONS TO A PIER IN THE STREAM? NO
4. DOES STREAM REACH ITS MAXIMUM HIGH WATER ELEVATION RAPIDLY? NO IS ORDINARY RISE RAPID? NO
5. NATURE OF NATURAL STREAMBED SAND, GRAVEL, & EDGE ON BANKS
6. ESTIMATED SCOUR DEPTH 2' COMMENT ON: DRIFT SLIGHT ICE MOD to HEAVY
7. WILL ALL WATER PASS THROUGH NEW STRUCTURE? YES IF NOT, WHAT FREQUENCY AND ELEVATION WILL RELIEF OCCUR? N.A.
   ADDITIONAL WATERWAY AREA PROVIDED BY RELIEF N.A.
8. VERTICAL CLEARANCE ABOVE Q 100 4'± @ PIER
9. ALLOWABLE WATER SURFACE ELEVATION 589.3 LIMITED BY Q100 WATER SURFACE ELEVATION
10. IS DESIGN STAGE AFFECTED BY ~~UPSTREAM OR~~ DOWNSTREAM CONDITIONS? YES IF YES, DESCRIBE CVPS POWER DAM 4700' DOWNSTR
11. AVERAGE DAILY LOW FLOW 130 CFS DEPTH 0.78 FT AVERAGE DAILY HIGH FLOW 450 CFS DEPTH 10.0' @ PIER
12. STREAMBANK OR CHANNEL PROTECTION REQUIRED TYPE II STONE FILL
13. DISTANCE TO EXISTING UPSTREAM STRUCTURE 500' SPAN 85' WATERWAY AREA OF FULL OPENING 2350 SF Q
14. DISTANCE TO EXISTING DOWNSTREAM STRUCTURE 4700' SPAN 119' WATERWAY AREA OF FULL OPENING 3332 SF Q

ALLOWABLE STRESSES:

1. DESIGN LIVE LOAD AASHTO HS 25
2. ALLOWABLE LOAD FOR SPREAD FOOTINGS ON SOIL N.A. ON LEDGE 10 KSF
3. ALLOWABLE LOAD FOR PILING 96 TONS TYPE HP 14x73 ESTIMATED LENGTH 50 FT
4. ALLOWABLE STRESS FOR STRUCTURAL STEEL ASTM A 588 TENSION 27.0 KSI
5. ALLOWABLE STRESS FOR REINFORCING STEEL GRADE 60 TENSION 27.0 KSI COMPRESSION 20.0 KSI
6. ALLOWABLE STRESS FOR CONCRETE CLASS LW f'c 4.0 KSI f'c 1.6 KSI
   CLASS B f'c 3.5 KSI f'c 1.4 KSI

TRAFFIC MAINTENANCE:

1. IS TRAFFIC TO BE MAINTAINED? NO IF YES, ON EXISTING STRUCTURE — OR ON TEMPORARY BRIDGE —
2. TEMPORARY BRIDGE REQUIREMENTS: ONE OR TWO WAY — TRAFFIC CONTROL SIGNALS REQUIRED —
   MINIMUM CLEAR SPAN — MINIMUM CLEAR HEIGHT — MINIMUM WATERWAY AREA —
   ARE SIDEWALKS REQUIRED? — IF SO, ON WHAT SIDE? —

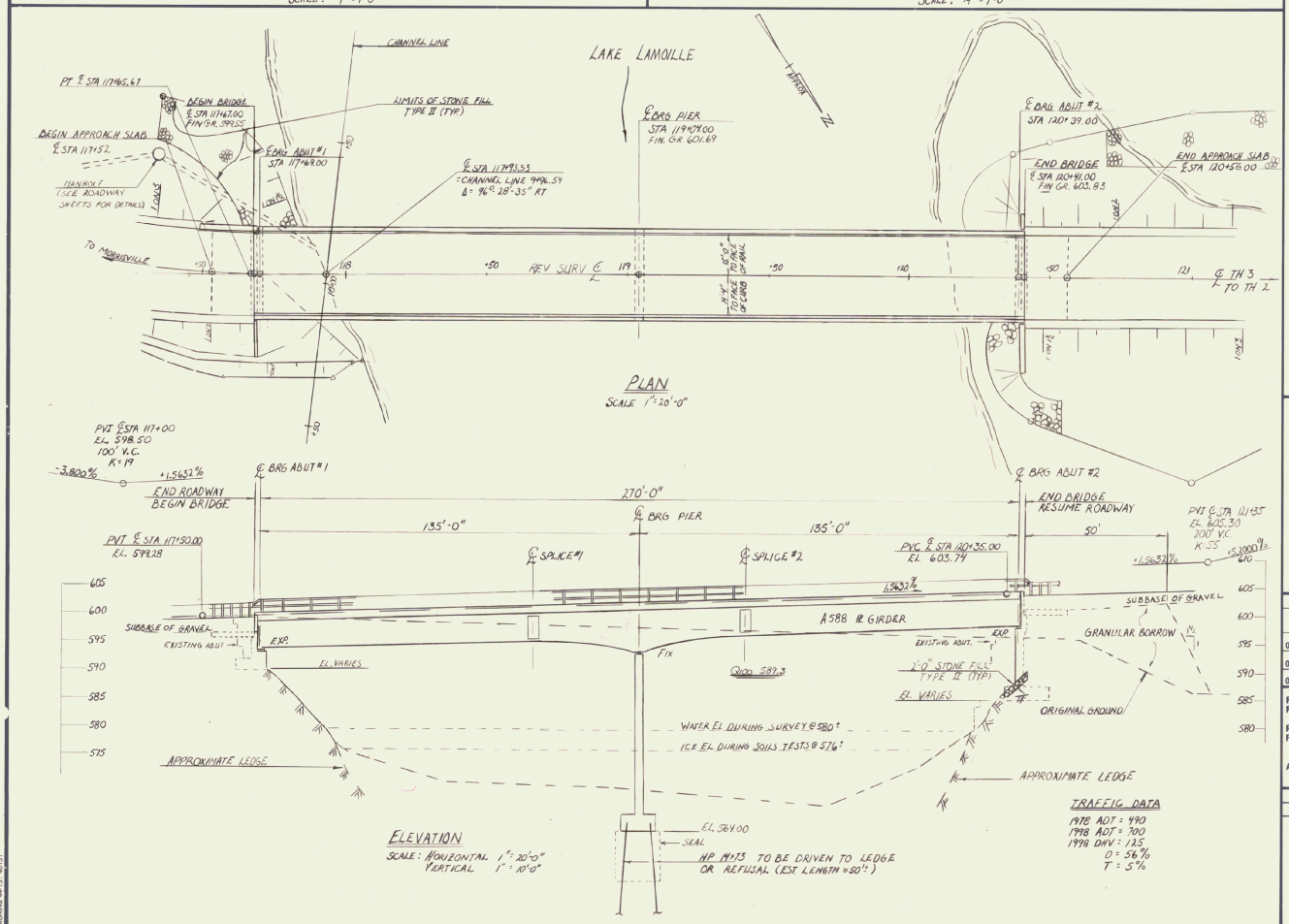

ADDITIONAL DESIGN CONSIDERATIONS

INDEX OF SHEETS:

BR 100 PRELIMINARY INFORMATION
BR 101 BRIDGE QUANTITY SHEET
BR 102 BORING LAYOUT & LOG
BR 103 SUPERSTRUCTURE DETAILS
BR 104 FRAMING PLAN, SPLICE & SCUPPER DETAILS
BR 105 GIRDER DETAILS, CAMBER DIAGRAM
BR 106 ABUTMENT #1 DETAILS
BR 107 ABUTMENT #2 DETAILS
BR 108 PIER DETAILS
BR 109 BEARING DEVICE DETAILS ALT. "A"
BR 109A BEARING DEVICE DETAILS ALT. "B"
BR 110 REINFORCING STEEL SCHEDULE

STANDARDS:

SB-R4-81	6-18-82 R
SB-R4B-82	12-28-81
SCB-01-73	9-14-81 R
SCB-04-76	1-8-76 R
SCB-06-73	1-3-79 R
SCB-07-71	12-13-76 R
SCB-09-71	1-27-75 R

LOAD RATING (TONS)

STRESS LEVELS	TRUCK H	HS	3S2	6 AXLE	3A. STR.	4A. STR.	5A. SEMI
INVENTORY 0.55 Fy =	40.9	45.2			64.1	65.9	71.3
POSTED 0.67 Fy =	66.6	68.0	74.6				
OPERATING 0.75 Fy =			90.0	97.9			

RECOMMENDED FOR APPROVAL W. M. Lovett 12/28/81 STRUCTURES ENGINEER DATE

RECOMMENDED FOR APPROVAL Arthur J. Gosa 12-28-81 CHIEF OF DESIGN DATE

APPROVED BY S. N. Jacobs DEC 29 1981 DIRECTOR OF ENGINEERING & CONSTRUCTION DATE

REVISIONS

NO.	DESCRIPTION	BY & DATE

STATE OF VERMONT
AGENCY OF TRANSPORTATION

TOWN OF MORRISTOWN	Bridge No. B-9
	Log Sta.
HIGHWAY NO. TH 3	Surv. Sta. 117+67
PRELIMINARY INFORMATION	
TH 3 OVER LAKE LAMOILLE	
Designed by D. BURLEY	Drawn by D. BURLEY
Checked by A.W. ELWOOD date 11/81	Bridge Design Supervisor R.S. HAUPT date 11/81
PROJECT MORRISTOWN	PROJECT NO. BRS-0238(2)
Bridge Sheet No. BR 100	Sheet 13 of 85

BRUNING 44-13-40151

BR-2

EARTHWORK

GRADES														
V.C.	% GRD	STATION	ELEVATION ON TAN.	ELEVATION ON V.C.	CORR. V.C.	DIST.	AREA	CU. YDS.	AREA	CU. YDS.	AREA	CU. YDS.	AREA	CU. YDS.

* INDICATES ROADWAY QUANTITY

BRIDGE QUANTITY SHEET

STATE OF VERMONT
AGENCY OF TRANSPORTATION
STRUCTURES DIVISION

QUANTITY BREAKDOWN

NO.	ITEM	UNIT	ROADWAY	SUPER-STRUCTURE	SUB-STRUCTURE	APPROACH SLABS	CHANNEL	TOTAL	FINAL
202.20	REMOVAL OF EXISTING SUPERSTRUCTURE	EA.	1					1	1
203.27	UNCLASSIFIED CHANNEL EXCAVATION	CY					60	60	136.2
* 203.32	GRANULAR BORROW	CY			40			40	0
204.25	STRUCTURE EXCAVATION	CY			310			310	380
204.30	GRANULAR BACKFILL FOR STRUCTURES	CY			190			190	164
* 404.65	EMULSIFIED ASPHALT	CWT		3				3	3
* 406.25	BITUMINOUS CONCRETE PAVEMENT	TON	123					123	123
501.25	CONCRETE CLASS B	CY			341	30		371	406.74
501.40	CONCRETE CLASS LW	CY		330				330	337.67
504.10	FURNISHING EQUIPMENT FOR DRIVING PILING	LS			1			1	1
505.17	STEEL PILING HP 14 x 73	LF			1000			1000	889
506.91	STRUCTURAL STEEL (℞ GIRDER)	LB		320,500				320,500	325,243
507.15	REINFORCING STEEL	LB		75230	45540	5430		126,200	126,395
508.15	SHEAR CONNECTORS (2136 @ 7/8"Ø x 7")	LS		1				1	1
514.10	WATER REPELLENT	GAL		27	19			46	46
* 519.20	SHEET MEMBRANE WATERPROOFING	S.Y.		875				875	874
530.10	COFFERDAM @ STA. 119+04	LS.			1			1	1
613.11	STONE FILL TYPE II	CY					130	130	283
* 614.10	JOINT SEALER - HOT POURED	GAL	3					3	
616.17	GRANITE BRIDGE CURB	LF		551				551	552
617.30	BRIDGE RAILING - GALVANIZED BOX BEAM	LF		552				552	567.5
	ALTERNATE "A"								
506.99	BEARING DEVICE ASSEMBLY PREFORMED FABRIC PADS @ ABUTMENTS	EA.			8			8	8
506.99	BEARING DEVICE ASSEMBLY STEEL @ PIER	EA.			4			4	4
	ALTERNATE "B"								
506.99	BEARING DEVICE ASSEMBLY FLOATING POT TYPE BEARINGS @ ABUTMENTS	EA.			8			8	0
506.99	BEARING DEVICE ASSEMBLY FLOATING POT TYPE BEARING @ PIER	EA.			4			4	0
	ALTERNATE "C"								
506.99	BEARING DEVICE ASSEMBLY PREFORMED FABRIC PADS @ ABUTMENTS	EA			8			8	0
506.99	BEARING DEVICE ASSEMBLY FLOATING POT TYPE BEARING @ PIER	EA.			4			4	0

BRIDGE (S) AT STATION (S) 117+67
LOCATION (S) TOWN HIGHWAY #3 OVER LAKE LAMOILLE

Prepared by: D BURLEY
Checked by: M. GARCIA
SUPERVISOR: R.S. HAUPT

MORRISTOWN
BR 101 OF BR 118

PROJECT NO. BRS-0238(2)
SHEET NO. 14 OF 85

BRUNING 44-131 40151

BR-1

SEE GENERAL NOTES ON BR108

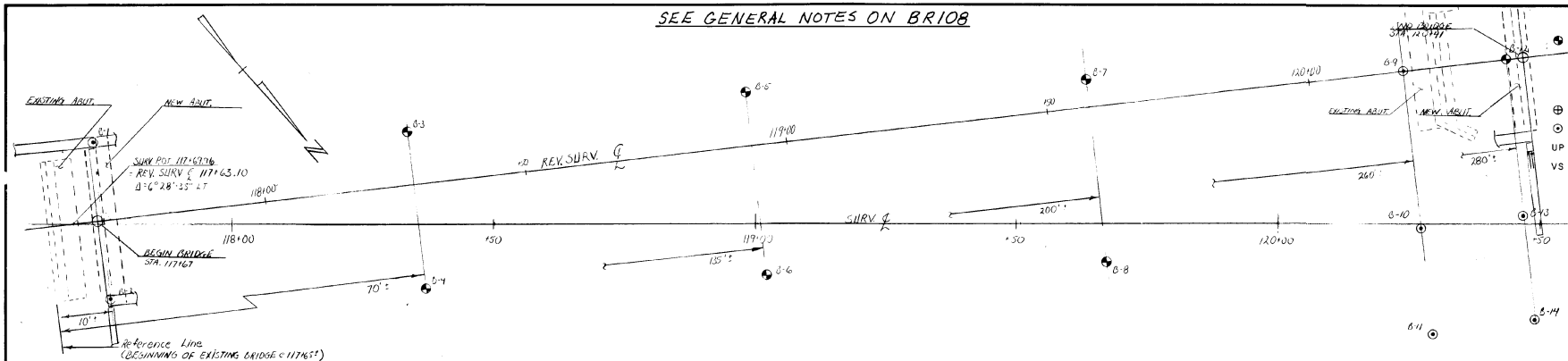

BORING NOMENCLATURE

- STANDARD PENETRATION BORINGS
  - SAMPLER OUTSIDE DIAMETER 2"
  - SAMPLER INSIDE DIAMETER 1 3/8"
  - WEIGHT OF HAMMER 140 LBS
  - HAMMER FALL 30"
- AUGER BORINGS
- ROD SOUNDINGS
- UP UNDISTURBED PISTON SAMPLE
- VS FIELD VANE SHEAR SAMPLE

Rod Soundings

Number	Ground Elev.	Depth to Rock	Rock Elev.
B1	591.3	9.3	582.0
B2	590.8	3.0	587.8
B9	579.8	Showing	579.8
B10	580.5	1.5	579.0
B11	576.0	0.5	575.5
B13	585.1	3.0	582.1
B14	582.8	1.5	581.3

BORING NO. B-3

DEPTH	BLOWS ON CASING	STANDARD PENETRATION	SAMPLE NUMBER	MOISTURE	COLOR	LABORATORY CLASSIFICATION OF SOIL
						Elev. 576.7' Top of Ice
0						Water 0'-6'
				V	Grey	
2						No Sample
9						A-1-a Gravel
				M	Bl.	
14						A-4 Silt
				M	Brn	
31						A-1-a Sandy Gravel
20				M	Grey	A-2-4 Silty Sand
24						A-4 Sandy Silt
40						A-1-b Silty Gravel
39						A-4 Sandy Silt
38						A-1-a Sandy Gravel
31						A-1-b Sandy Gravel
56	R					A-1-b Silty Gravel
						Top of Bed Rock @ 53.0'
						AXMOC 53.0'-58'-0' REC. 4.8'
						AXMOC 58.0'-61.0' REC. 2.9'
						Hole Stopped @61.2' In Bed Rock

BORING NO. B-4

DEPTH	BLOWS ON CASING	STANDARD PENETRATION	SAMPLE NUMBER	MOISTURE	COLOR	LABORATORY CLASSIFICATION OF SOIL
						Elev. 576.7' Top of Ice
0						Water 0'-6'
				W	Blk	
2						No Sample
						Muck 9.4% Organic
				Sat	Brn	A-3 Sand
3						
				V	Grey	
10						A-1-a Sandy Gravel Trace of Wood
68						A-4 Sandy Silt Trace of Wood
				M	Grey	
27						A-2-4 Silty Sand
17						A-1-b Silty Gravel
R						A-2-4 Silty Sand
18						A-2-4 Silty Sand
R						Top of Bed Rock 844.5'
						AXMOC 49.0'-49.5' REC. 4.85'
						AXMOC 49.5'-54.5' REC. 3.0'
						Hole Stopped 854.5' In Bed Rock

BORING NO. B-5

DEPTH	BLOWS ON CASING	STANDARD PENETRATION	SAMPLE NUMBER	MOISTURE	COLOR	LABORATORY CLASSIFICATION OF SOIL
						Elev. 575.5 Top of Water
						River Bed @3.0'
1	1					No Sample
2	2					
3	3					
4	4					No Sample
5	5					
6	6					
7	7					
8	8					
9	9					
10	10					
11	11					
12	12					
13	13					
14	14					
15	15					
16	16					
17	17					
18	18					
19	19					
20	20					
21	21					
22	22					
23	23					
24	24					
25	25					
26	26					
27	27					
28	28					
29	29					
30	30					
31	31					
32	32					
33	33					
34	34					
35	35					
36	36					
37	37					
38	38					
39	39					
40	40					
41	41					
42	42					
43	43					
44	44					
45	45					
46	46					
47	47					
48	48					
49	49					
50	50					
51	51					
52	52					
53	53					
54	54					
55	55					
56	56					
57	57	138		VDK	Gry	A-4 Silt
						Top of Bed Rock @67.0'
						AXMOC 57.0'-62.0' REC. 4.2'
						AXMOC 62.0'-67.0' REC. 5.0'
						Hole Stopped @67.0' In Bed Rock

BORING NO. B-6

DEPTH	BLOWS ON CASING	STANDARD PENETRATION	SAMPLE NUMBER	MOISTURE	COLOR	LABORATORY CLASSIFICATION OF SOIL
						Elev. 576.1 Top of Ice
0						Water 0.2'-6.0'
2						No Sample
						A-3 Sand
4						
				N	Grey	
2						A-2-4 Silty Sand
25						No Sample
						Flowing Sand
						Flowing Sand
						No Sample
17						
20						A-2-4 Sand
3						A-2-4 Silty Sand
13						A-4 Sand Silt
58						A-4 Silt
						Top of Bed Rock @53.0'
						AXMOC 53.0'-58.0' REC. 4.7'
						AXMOC 58.0'-65.0' REC. 4.3'
						Hole Stopped @ 63.0' In Bed Rock

BORING NO. B-7

DEPTH	BLOWS ON CASING	STANDARD PENETRATION	SAMPLE NUMBER	MOISTURE	COLOR	LABORATORY CLASSIFICATION OF SOIL
						Elev. 575.5 Top of Water
				Sat	Clr	
						Water
						River Bed @ 13.0'
						A-3 Sand

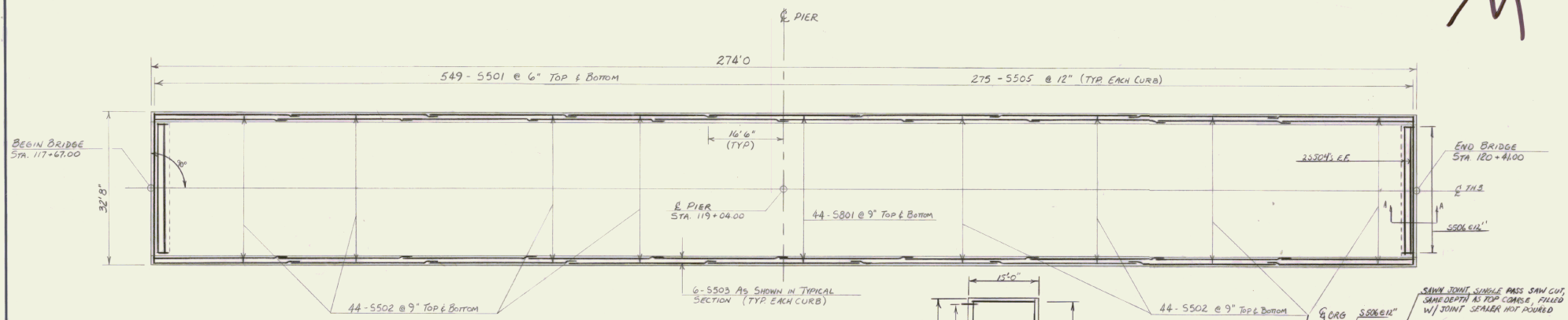

PLAN - DECK REINFORCING

SCALE : 1" = 10'0"

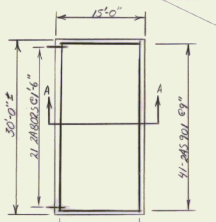

APPROACH SLAB #2 PLAN

SCALE: 1"=10'-0"

(APPROACH SLAB #1 SIMILAR EXCEPT W/PREFIX (A) #5)

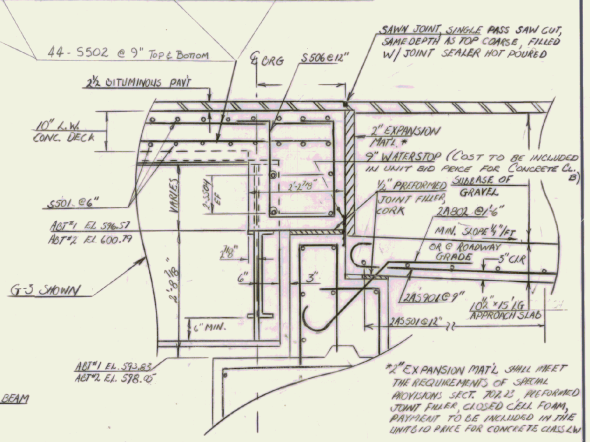

*2" EXPANSION MAT'L SHALL MEET THE REQUIREMENTS OF SPECIAL PROVISIONS SECT. 702.23, PREFORMED JOINT FILLER, CLOSED CELL FOAM. PAYMENT TO BE INCLUDED IN THE UNIT $ FOR CONCRETE CLASS LW

SECTION A-A - HAUNCH & APPROACH SLAB DETAILS

SCALE : ¾" = 1'-0"

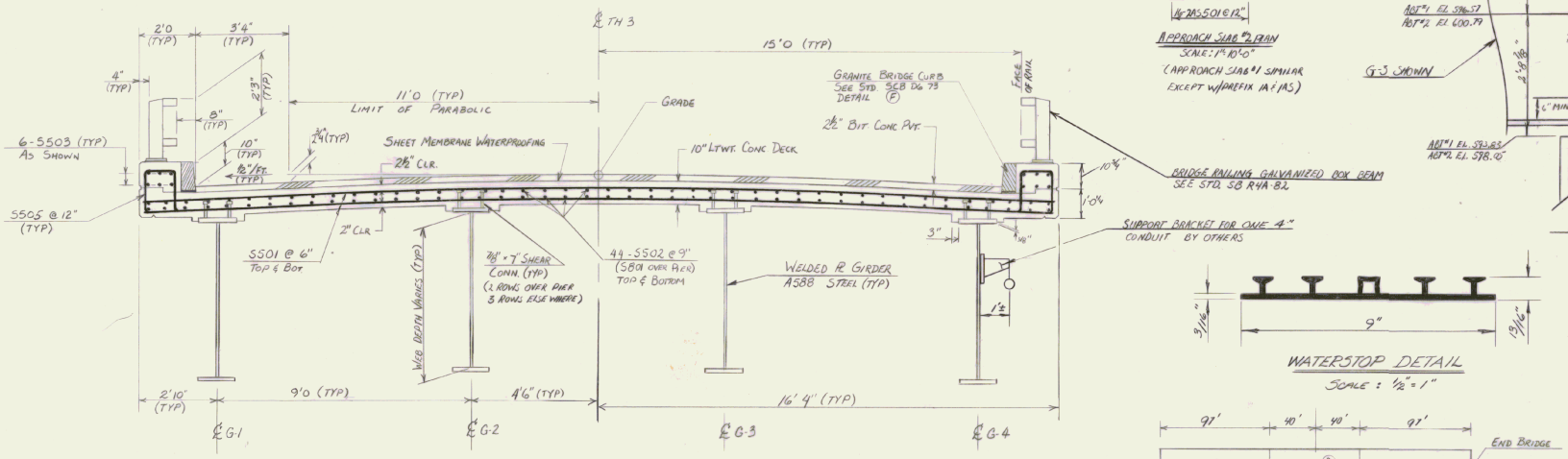

TYPICAL SECTION

SCALE : ½" = 1'0"

WATERSTOP DETAIL

SCALE : ½" = 1"

POUR SEQUENCE

SCALE: 1" = 50'

NOTE : ENTIRE DECK TO BE CAST IN ONE DAY UNLESS OTHERWISE AUTHORIZED IN WRITING BY THE ENGINEER. TEMPORARY BULKHEADS MUST BE USED AT ENDS OF POUR.

STATE OF VERMONT
AGENCY OF TRANSPORTATION

TOWN OF MORRISTOWN	Bridge No. 89
HIGHWAY NO. TH 3	Log Sta.
	Surv. Sta. 117+67
TH 3 OVER LAKE LAMOILLE	
SUPERSTRUCTURE DETAILS	
Designed by D. BURLEY	Drawn by L GRAHAM
Checked by G.V.S date 10/82	Bridge Design Supervisor R.S HAUPT date 11/82
PROJECT MORRISTOWN	PROJECT NO. BRS 0238(2)
Bridge Sheet No. BR 103	Sheet 16 of 85

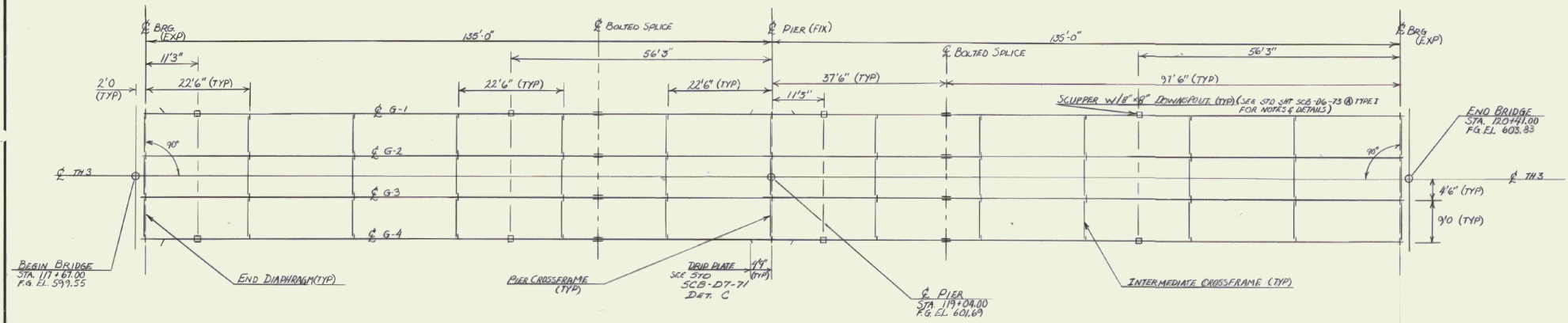

FRAMING PLAN
SCALE: 1" = 10'

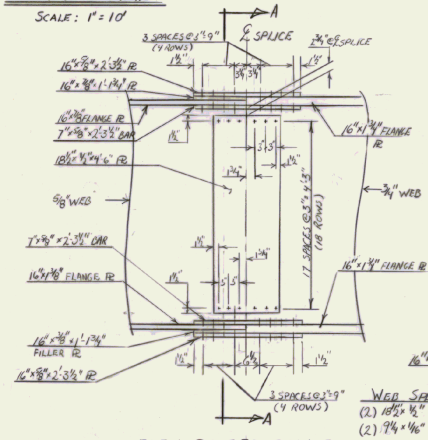

ELEV. BOLTED SPLICE
SCALE: ¾" = 1'0"

WEB SPLICE PL's
(2) 18½" x ½" x 4'-6" SIDES *CVN
(2) 9¾" x ⅜" x 4'-6" FILLER

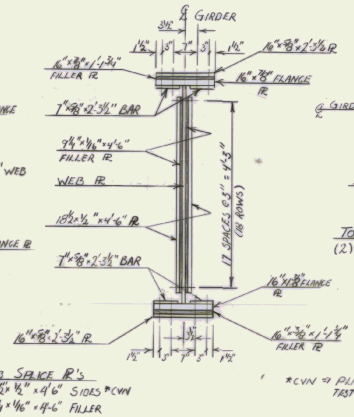

SECTION A-A
SCALE: ¾" = 1'0"

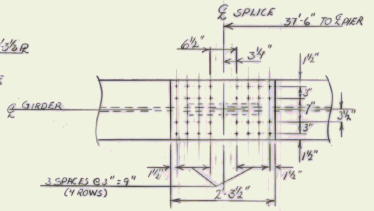

TOP FLANGE SPLICE PL's (2 BARS)
(2) 7" x ⅞" x 2'-3½" TOP *CVN
16" x ⅞" x 2'-3½" TOP *CVN
16" x ⅞" x 1'-1¾" FILLER

BOTTOM FLANGE SPLICE PL's (1 BAR)
(2) 7" x ⅞" x 2'-3½" TOP *CVN
16" x ⅞" x 2'-3½" BOT *CVN
16" x ⅜" x 1'-1¾" FILLER

PLAN - BOLTED SPLICE
SCALE: ¾" = 1'0"

*CVN = PLATES REQUIRING CHARPY V-NOTCH TEST AS REQUIRED IN STD. SPEC. SECTION 714.03.

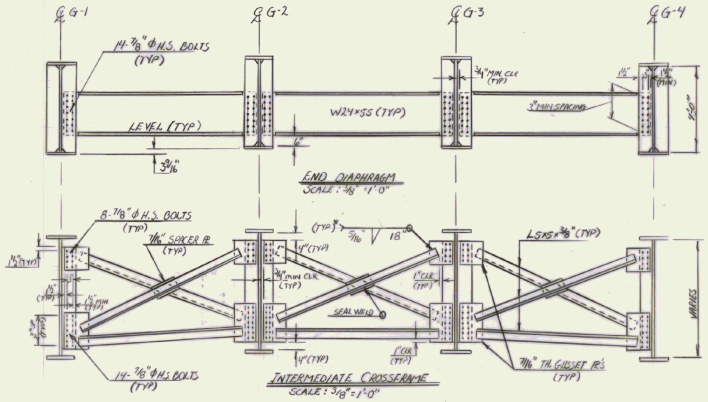

END DIAPHRAGM
SCALE: ⅜" = 1'-0"

INTERMEDIATE CROSSFRAME
SCALE: ⅜" = 1'-0"

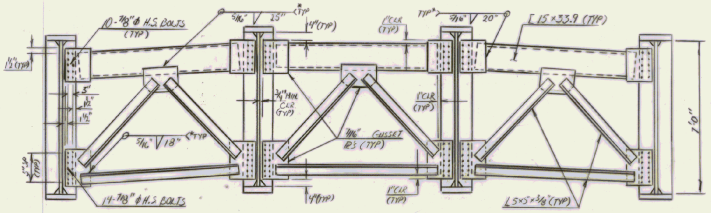

PIER CROSSFRAME
SCALE: ⅜" = 1'-0"

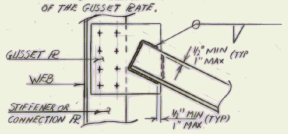

STATE OF VERMONT
AGENCY OF TRANSPORTATION

TOWN OF MORRISTOWN	Bridge No. B-9
	Log Sta.
HIGHWAY NO. TH 3	Surv. Sta. 117+67
TH 3 OVER LAKE LAMOILLE	
FRAMING PLAN & SPLICE DETAILS	
Designed by D. BURLEY	Drawn by L. GRAHAM
Checked by G.V.S. date 10/82	Bridge Design Supervisor R.S. HAUPT date 11/82
PROJECT MORRISTOWN	PROJECT NO. BR 0238(2)
Bridge Sheet No. BR 104	Sheet 17 of 85

BRUNING 43-137-40151

BR-6

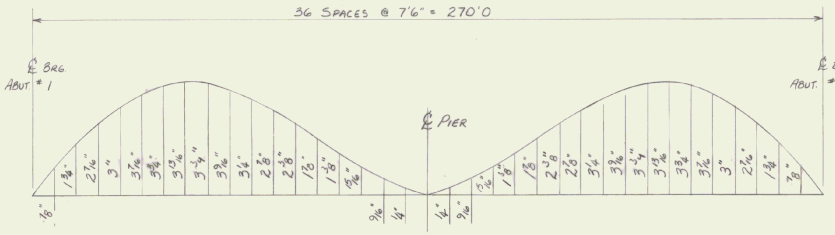

CAMBER DIAGRAM

SCALE: 1" = 20' HOR.
½" = 1" VERT.

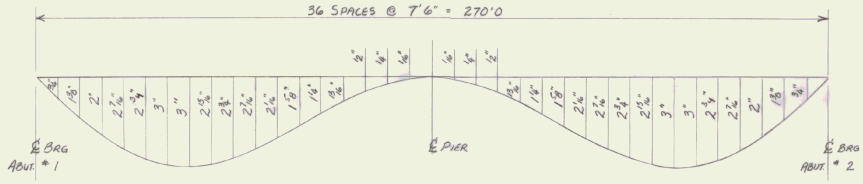

DEAD LOAD DEFLECTIONS

SCALE: 1" = 20' HOR.
½" = 1" VERT.

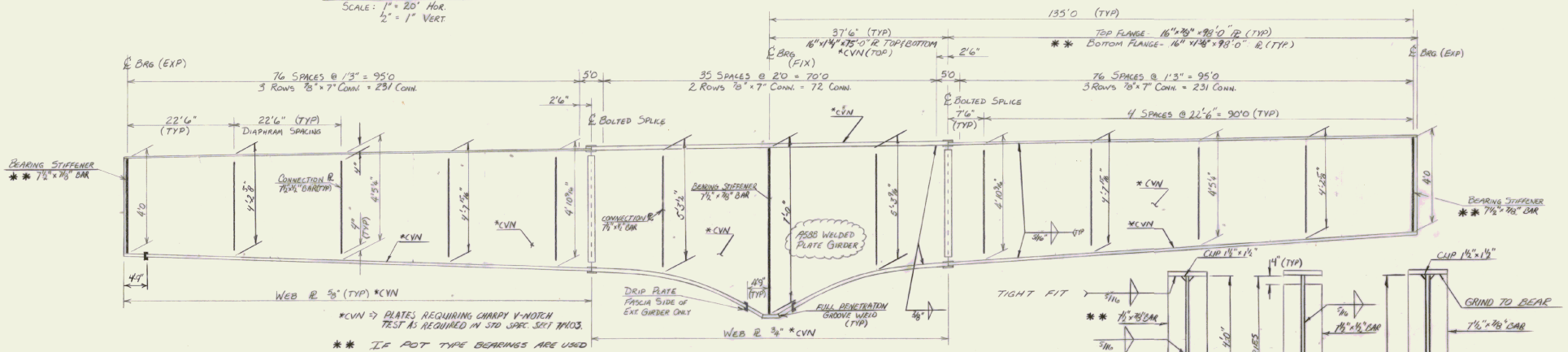

*CVN ⇒ PLATES REQUIRING CHARPY V-NOTCH TEST AS REQUIRED IN STD SPEC. SECT 714.03.

** IF POT TYPE BEARINGS ARE USED AT THE ABUTMENTS, THE BEARING STIFFENERS WILL BE 5⅜" x ⅜" AND THE BOTTOM FLANGE WILL BE TAPERED AS SHOWN ON SHT BR 109 A.

GIRDER ELEVATION (TYP)

SCALE: 1" = 10' HOR.
1" = 2' VERT.

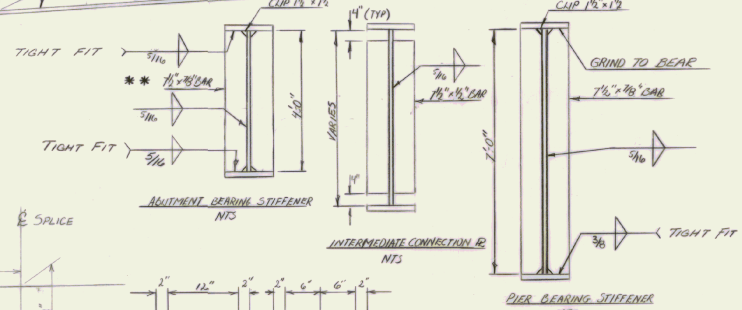

ABUTMENT BEARING STIFFENER NTS

INTERMEDIATE CONNECTION ℄ NTS

PIER BEARING STIFFENER NTS.

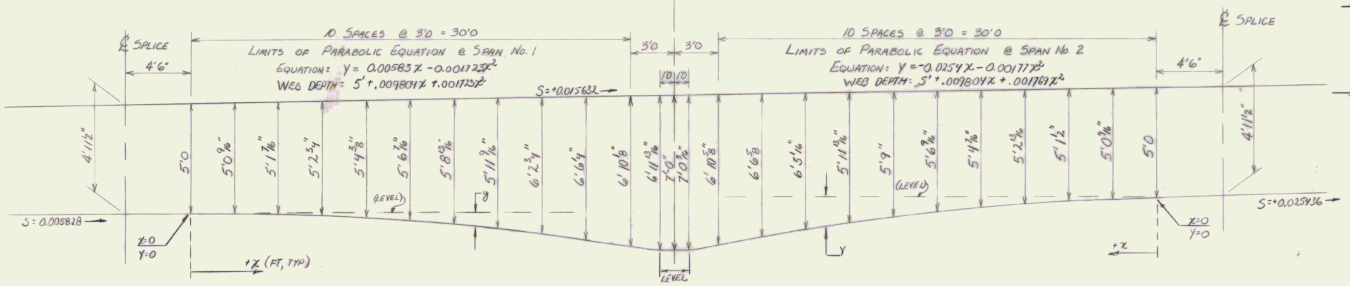

PARABOLIC HAUNCH DETAIL

SCALE: ¼" = 1'0 HOR.
3/8" = 1'0 VERT.

NOTE: ENDS OF GIRDERS, BEARING STIFFENERS, AND CONNECTION PLATES SHALL BE VERTICAL IN THE ERECTED POSITION.

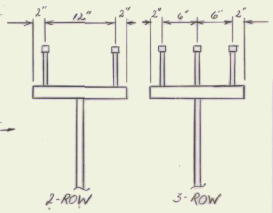

SHEAR STUD DETAILS NTS

STATE OF VERMONT
AGENCY OF TRANSPORTATION

TOWN OF MORRISTOWN	Bridge No. B9
HIGHWAY NO. TH 3	Log Sta. Surv. Sta. 117+67
TH 3 OVER LAKE LAMOILLE	
GIRDER DETAILS, CAMBER DIAGRAM	
Designed by D. BURLEY	Drawn by L. GRAHAM
Checked by GVS date 10/92	Bridge Design Supervisor R.S. HAUPT date 11/92
PROJECT MORRISTOWN	PROJECT NO. BRS0238(2)
Bridge Sheet No. BR 105	Sheet 18 of 65

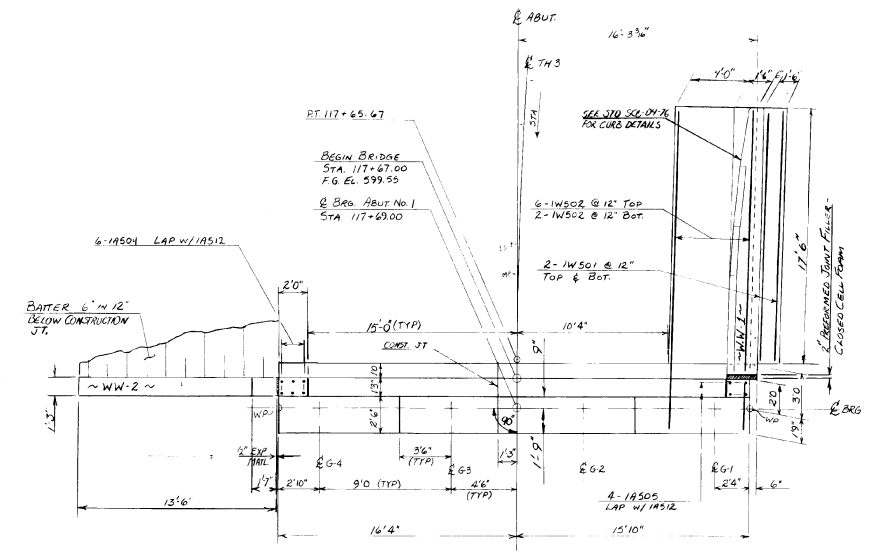

ABUT. No. 1 - PLAN

SCALE: 1/4" = 1'0

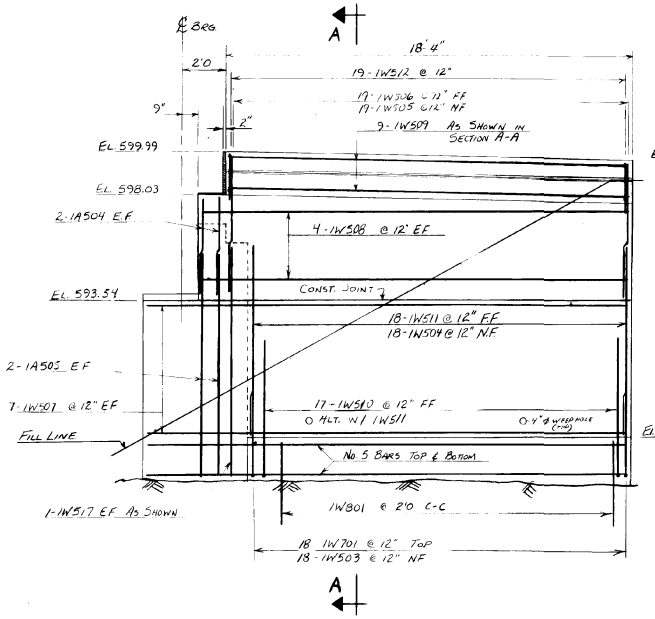

WINGWALL No. 1 - ELEV.

SCALE: 3/8" = 1'0

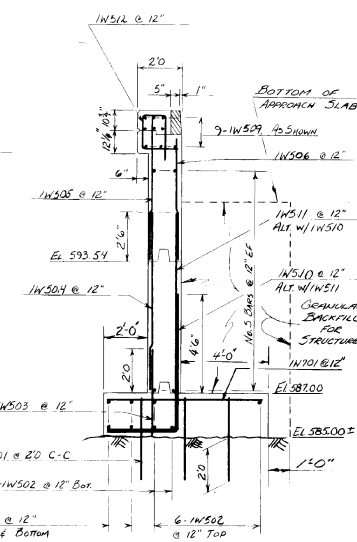

SECTION A-A

SCALE: 3/8" = 1'0

NOTE: ELEVATIONS SHOWN ARE FOR THE BEARING DEVICE SHOWN ON SHT BR 109

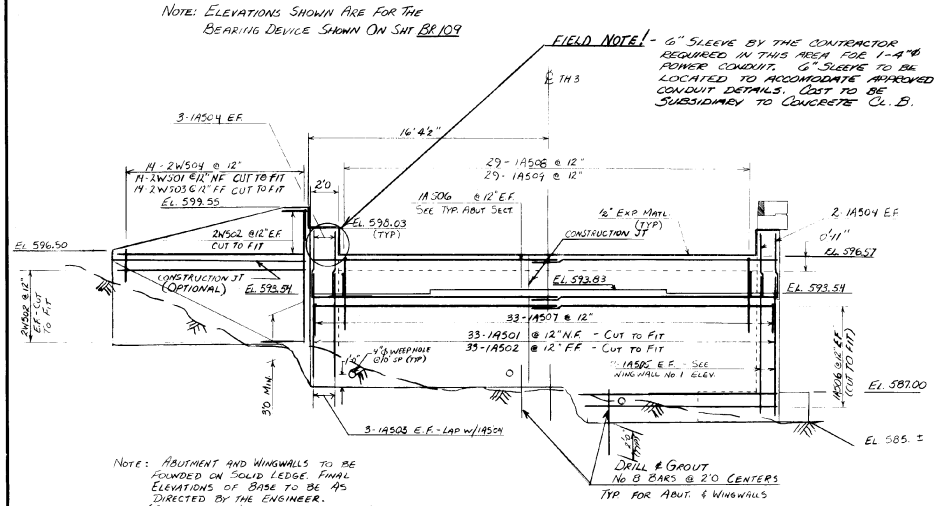

NOTE: ABUTMENT AND WINGWALLS TO BE FOUNDED ON SOLID LEDGE. FINAL ELEVATIONS OF BASE TO BE AS DIRECTED BY THE ENGINEER. (SEE NOTE ON OVERBREAKAGE ON BR 107)

ABUT. No. 1 - ELEVATION

SCALE: 1/4" = 1'0

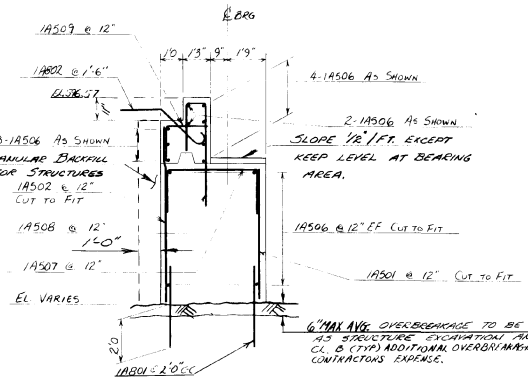

ABUT. No. 1 - TYP. SECTION

SCALE: 3/8" = 1'0

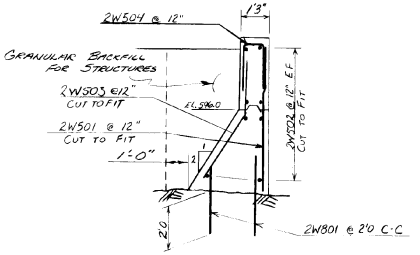

WW No. 2 - TYP. SECTION

SCALE: 3/8" = 1'0

STATE OF VERMONT
AGENCY OF TRANSPORTATION

TOWN OF MORRISTOWN	Bridge No. B-9
HIGHWAY NO. TH-3	Log Sta. Surv. Sta. 117+67
TH 3 over LAKE LAMOILLE	
ABUTMENT No. 1 DETAILS	
Designed by D. BURLEY	Drawn by L. GRAHAM
Checked by G.V.S date 10/82	Bridge Design Supervisor R.S. HAUPT date 11/82
PROJECT MORRISTOWN	PROJECT NO. BRS 0238(2)
Bridge Sheet No. BR 106	Sheet 19 of 85

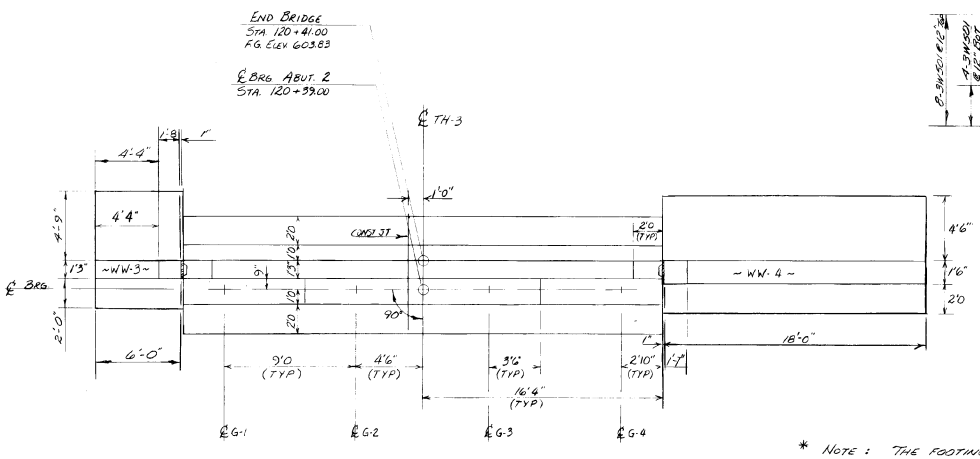

PLAN

SCALE: 4"=1'0

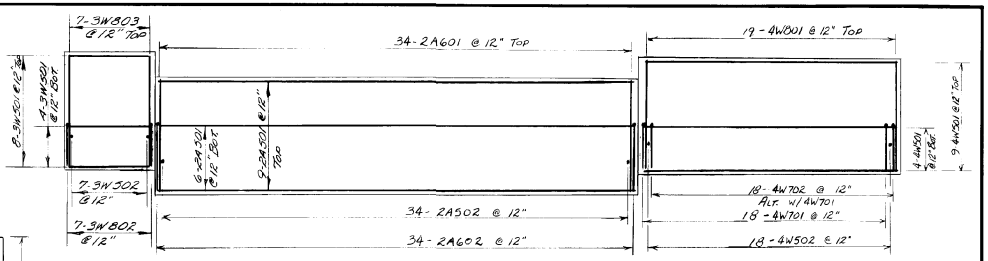

FOOTING RE-STEEL

SCALE: 4"=1'0

* NOTE: THE FOOTING ELEVATION MAY BE ADJUSTED TO ACCOMMODATE ACTUAL LEDGE CONDITIONS. THE ENGINEER SHOULD CONTACT THE STRUCTURES DIVISIONS OF FOOTING ELEVATION CHANGES GREATER THAN TWO (2) FEET.

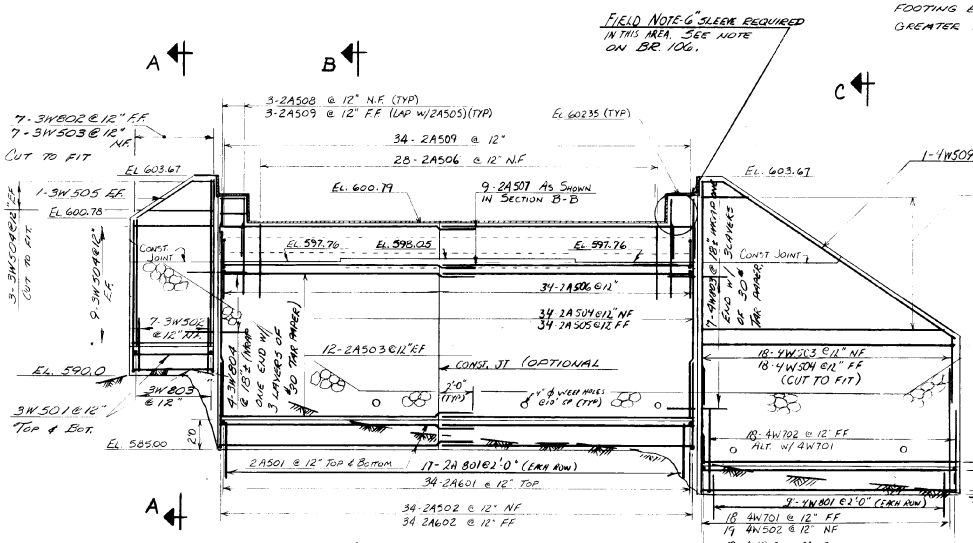

NOTE: ABUTMENT AND WINGWALLS TO BE FOUNDED ON SOLID LEDGE. FINAL ELEVATIONS OF BASE TO BE AS DIRECTED BY THE ENGINEER.

ELEVATION

SCALE: 4"=1'0

SLOPE 1/2" /FT. EXCEPT KEEP LEVEL AT BEARING AREA.

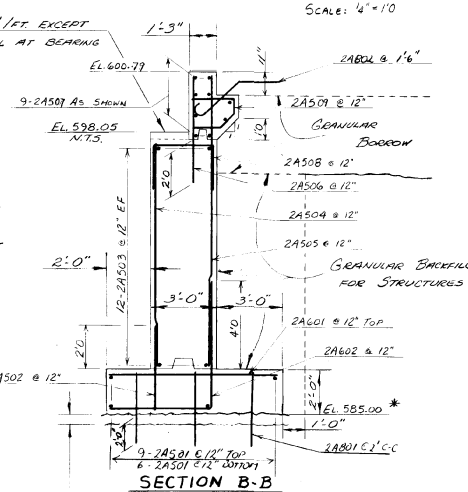

SECTION B-B

SCALE: 3/8"=1'0

6" MAX AVG. OVERBREAKAGE TO BE PAID FOR AS STRUCTURE EXCAVATION AND CONCRETE CLASS B. ADDITIONAL OVERBREAKAGE SHALL BE AT CONTRACTORS EXPENSE. (TYP)

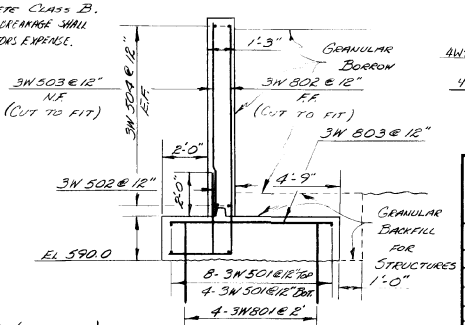

SECTION A-A

SCALE: 3/8"=1'0

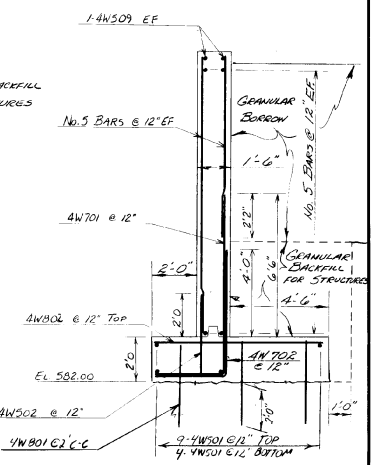

SECTION C-C

SCALE: 3/8"=1'0

STATE OF VERMONT
AGENCY OF TRANSPORTATION

TOWN OF MORRISTOWN	Bridge No. B-9
HIGHWAY NO. TH 3	Log Sta.
	Surv. Sta. 117+67
TH 3 OVER LAKE LAMOILLE	
ABUTMENT NO. 2 DETAILS	
Designed by D. BURLEY	Drawn by L. GRAHAM
Checked by G.V. SPICAK date 10/82	Bridge Design Supervisor R.S. HAUPT date 11/82
PROJECT MORRISTOWN	PROJECT NO. BRS 0238(2)
Bridge Sheet No. BR 107	Sheet 20 of 85

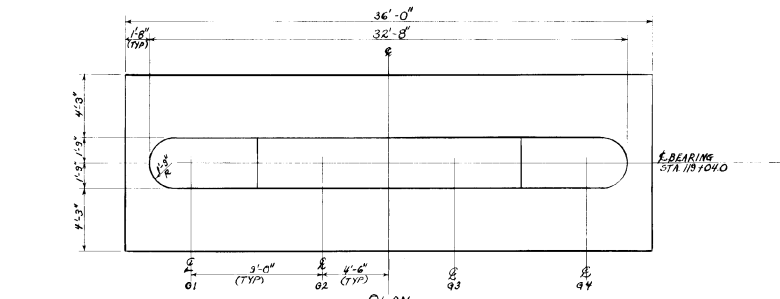

PLAN
SCALE: 1/4" = 1'-0"

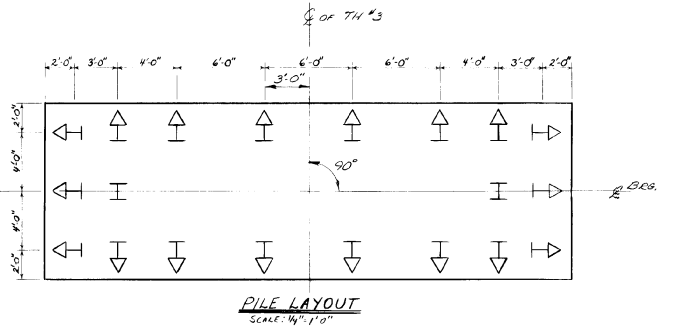

PILE LAYOUT
SCALE: 1/4" = 1'-0"

1. ALL CONCRETE ABOVE ELEVATION 564.0 SHALL BE PLACED IN THE DRY CONDITION.
2. FURNISHING AND DRIVING OF HP 14X73 PILES SHALL BE IN ACCORDANCE WITH SECTION 505. OF THE SPECIFICATIONS.
3. DENOTES DIRECTIONS OF 1 ON 12 PILE BATTER.
4. PILES ARE DESIGNED FOR A MAXIMUM POINT BEARING LOAD OF 9000 psi OR 96 TONS. ESTIMATED PILE LENGTH IS 50 FEET. ALL PILES SHALL HAVE REINFORCED TIPS IN ACCORDANCE WITH THE SPECIAL PROVISIONS. THE COST OF THE REINFORCED PILE TIPS SHALL BE INCLUDED IN THE UNIT BID PRICE OF THE STEEL PILING ITEM.
5. IT IS BROUGHT TO THE CONTRACTORS ATTENTION THAT SOIL BELOW THE PIER FOOTING IS A LOOSE GRANULAR MATERIAL (SEE BORING LOGS). TO FACILITATE THE SAFE DEWATERING OF THE COFFERDAM, A CONCRETE SEAL SHALL BE PLACED BELOW THE PIER FOOTING. FOR AN ASSUMED WATER ELEVATION OF 580.0 DURING CONSTRUCTION, A SEAL DEPTH OF 10 FEET WILL BE NEEDED. ANY CHANGES TO THIS ASSUMED WATER ELEVATION MUST BE ACCOUNTED FOR IN THE CONTRACTORS DESIGN OF THE COFFERDAM. THE COFFERDAM SHALL BE A MINIMUM OF TWO FEET LARGER THAN THE FOOTING DIMENSIONS. DETAILS OF THE COFFERDAM WILL BE SUBMITTED TO THE STRUCTURES ENGINEER IN ACCORDANCE WITH THE PROVISIONS OF SECTION 506.04 OF THE STANDARD SPECIFICATIONS. THE SUBMITTAL SHALL INCLUDE COPIES OF ANY ENGINEERING DESIGN COMPUTATIONS.
6. PAY ITEM 530.10, COFFERDAM AT STATION 119+04, SHALL BE FULL COMPENSATION FOR PLACEMENT AND REMOVAL OF CONSTRUCTION MATERIALS, EXCAVATION OF MATERIALS WITHIN THE COFFERDAM, PLACEMENT OF A CONCRETE SEAL, LABOR AND EQUIPMENT TO DO THE NECESSARY WORK.
7. ALL REINFORCING SHALL HAVE A MINIMUM COVER OF 3 INCHES, UNLESS OTHERWISE NOTED.

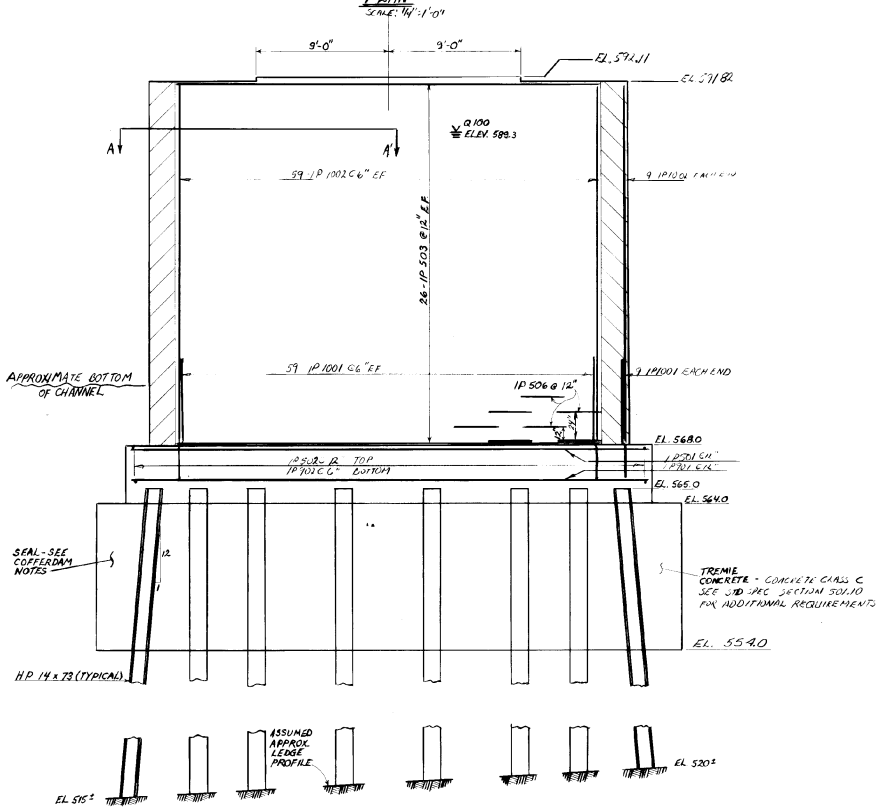

ELEVATION
SCALE: 1/4" = 1'-0"

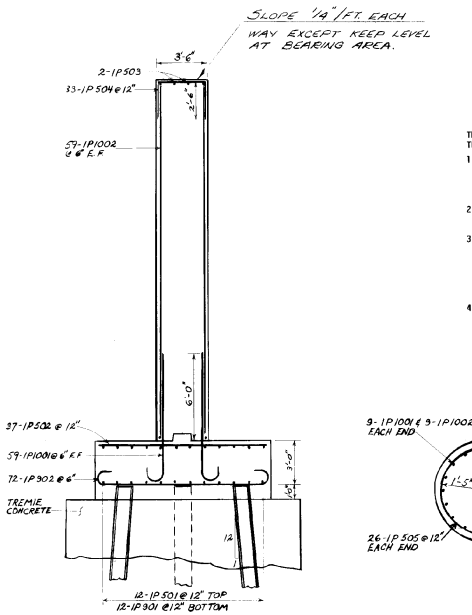

TYPICAL SECTION
SCALE 1/4" = 1'-0"

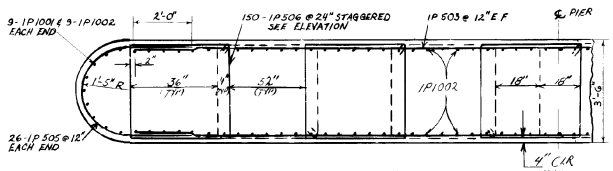

SECTION A-A'
SCALE: 1/4" = 1'-0"

GENERAL NOTES

THE SUBSURFACE EXPLORATIONS SHOWN ~~HEREON~~ ON BR 102 WERE MADE BETWEEN 6-28-79 AND 5-1-81 BY THE VERMONT AGENCY OF TRANSPORTATION.

1. SOIL AND ROCK (WHERE ENCOUNTERED) CLASSIFICATION, PROPERTIES AND DESCRIPTIONS ARE BASED ON ENGINEERING INTERPRETATION OF AVAILABLE SUBSURFACE INFORMATION BY THE VERMONT AGENCY OF TRANSPORTATION AND MAY NOT NECESSARILY REFLECT ACTUAL VARIATIONS IN SUBSURFACE CONDITIONS THAT MAY BE ENCOUNTERED BETWEEN INDIVIDUAL BORING OR SAMPLE LOCATIONS.
2. OBSERVED WATER LEVELS AND/OR WATER CONDITIONS INDICATED ARE AS RECORDED AT THE TIME OF EXPLORATION AND MAY VARY ACCORDING TO THE PREVAILING RAINFALL, METHODS OF EXPLORATION AND OTHER FACTORS.
3. SOUND ENGINEERING JUDGEMENT WAS EXERCISED IN PREPARING THE SUBSURFACE INFORMATION PRESENTED HEREON. ANALYSIS AND INTERPRETATION OF SUBSURFACE DATA WAS PERFORMED AND INTENDED FOR AGENCY DESIGN AND ESTIMATE PURPOSES ONLY. PRESENTATION OF THE INFORMATION ON THE PLANS OR ELSEWHERE IS FOR THE PURPOSE OF PROVIDING INTENDED USERS WITH ACCESS TO THE SAME DATA AVAILABLE TO THE AGENCY. THE SUBSURFACE INFORMATION IS PRESENTED IN GOOD FAITH AND IS NOT INTENDED AS A SUBSTITUTE FOR PERSONAL INVESTIGATION, INDEPENDENT INTERPRETATIONS, INDEPENDENT ANALYSIS OR JUDGEMENT OF THE CONTRACTOR.
4. PICTORIAL STRUCTURE DETAILS SHOWN HEREON ARE FOR ILLUSTRATIVE PURPOSES ONLY AND MAY NOT BE INDICATIVE OF THE FINAL DESIGN CONDITIONS SHOWN IN THE CONTRACT PLANS.

STATE OF VERMONT
AGENCY OF TRANSPORTATION

TOWN OF MORRISTOWN	Bridge No. B-9
	Log Sta.
HIGHWAY NO. TH3	Surv. Sta. 117+67
TH3 OVER LAKE LAMOILLE	
PIER DETAILS	
Designed by GVS	Drawn by DZG
Checked by D. BURLEY date 10/81	Bridge Design Supervisor R.S. HAUPT date 11/82
PROJECT MORRISTOWN	PROJECT NO. BRS 0238(2)
Bridge Sheet No. BR 108	Sheet 21 of 65

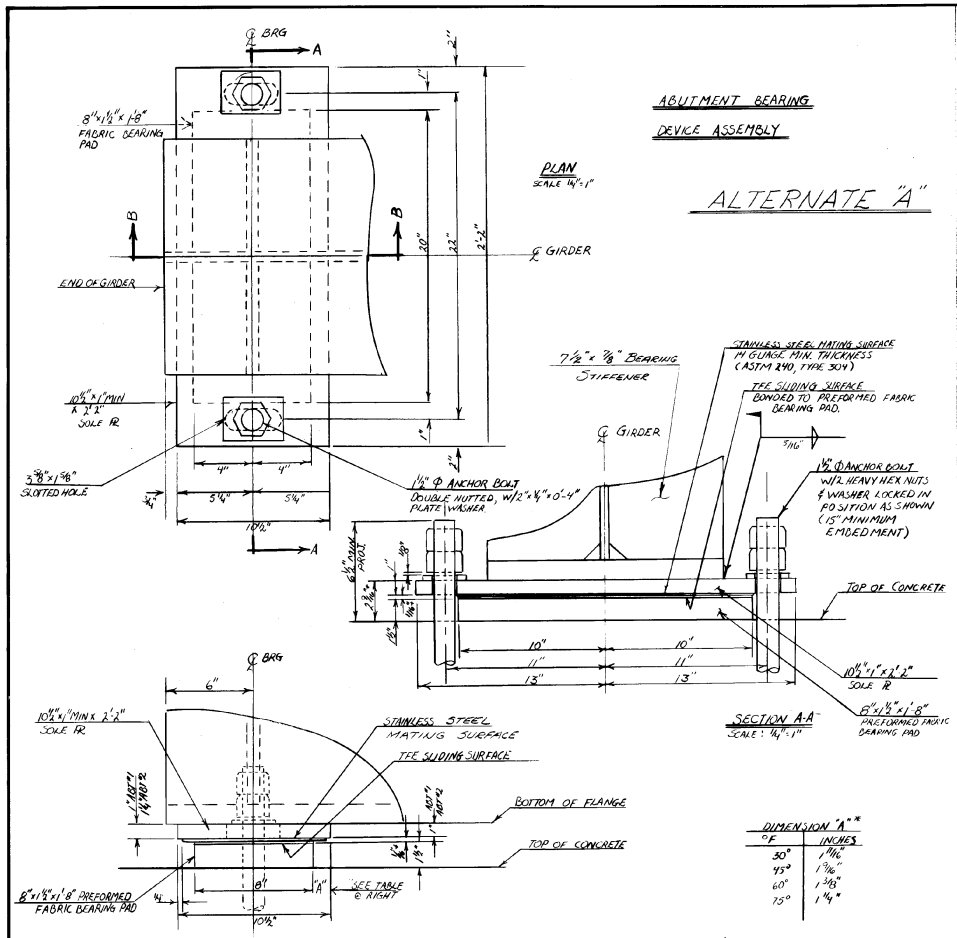

ABUTMENT BEARING DEVICE ASSEMBLY NOTES - EXPANSION

1) FABRIC PAD BEARINGS (ALTERNATE "A")
   A) EXPANSION BEARINGS SHALL HAVE A TFE SLIDING SURFACE BONDED TO THE PREFORMED FABRIC BEARING PAD AS ONE COMPONENT AND MATED TO A STAINLESS STEEL FACED STEEL PLATE AS THE OTHER COMPONENT.
   B) COMPONENTS SHALL CONFORM TO THE DESIGN, FABRICATION AND MATERIAL REQUIREMENTS OF SECTION 731.

2) FLOATING (POT TYPE) BEARINGS (ALTERNATE "B")
   A) FOR DETAILS OF POT TYPE BEARINGS SEE SHEET BR109A

3) DESIGN REQUIREMENTS
   A) LOADS
      1) VERTICAL 153 K MAX, 63K MIN.
      2) TRANSVERSE 7K
   B) MOVEMENT
      1) LONGITUDINAL - ± 1" FROM 45°F POSITION.
      2) ROTATION - .015 RADIANS
   C) MAX. CONCRETE BEARING PRESSURE = 1.0 KSI.

4) ALL ABUTMENT BEARING DEVICES SHALL BE OF ONE KIND.

5) FOR ADDITIONAL NOTES AND DETAILS FOR BEARING DEVICES SEE SHT BR109A

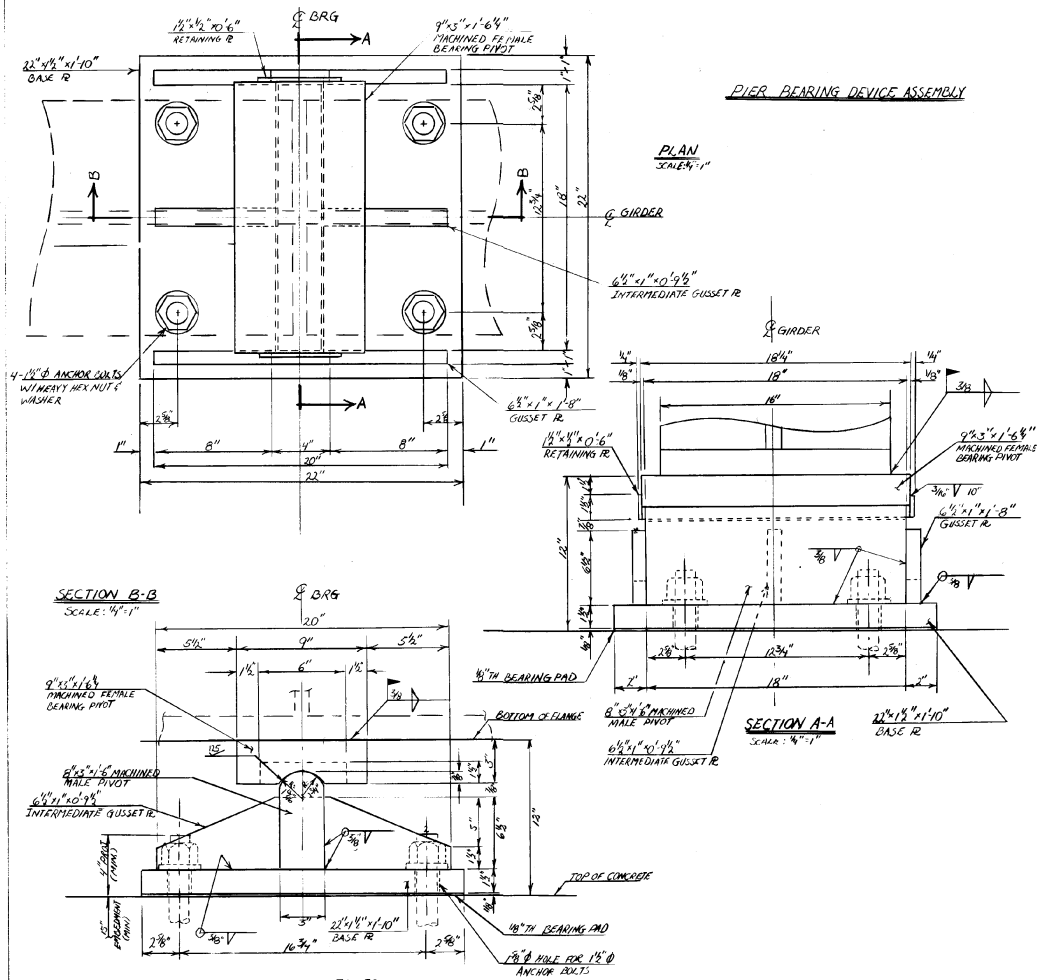

PIER BEARING DEVICE ASSEMBLY NOTES - FIXED

1) FIXED BEARING DEVICE - PIVOT TYPE (ALTERNATE "A")
   A) ANCHOR BOLT ASSEMBLIES SHALL CONFORM TO STD. SPEC. SUBSECTION 711.16, ANCHOR BOLTS.
   B) ALL BEARING DEVICE COMPONENTS SHALL BE FABRICATED FROM CORROSION RESISTANT UNPAINTED STEEL CONFORMING WITH AASHTO M 222 (ASTM A 588) WITH SURFACE PREPARATION CONFORMING TO SECTION 506.47 b OF THE STD SPEC. UNLESS OTHERWISE SPECIFIED.
   C) 1½" BEARING PAD SHALL CONFORM TO SPECIAL PROVISIONS SECTION 731.01 OR 731.02.
   D) SHOP DRAWINGS SHALL BE FURNISHED AND APPROVED IN ACCORDANCE WITH SUBSECTION 506.05, SHOP DRAWINGS.

2) FLOATING (POT TYPE) BEARINGS (ALTERNATE "B")
   FOR DETAILS SEE SHT. BR. 109A

3) DESIGN REQUIREMENTS
   A) LOADS
      1) VERTICAL 96K
      2) TRANSVERSE 12.1K
      3) LONGITUDINAL 14K
   B) MOVEMENT - ROTATION - .015 RADIANS MIN.
   C) MAXIMUM CONCRETE BEARING PRESSURE = 1.0 KSI.

STATE OF VERMONT
AGENCY OF TRANSPORTATION

TOWN OF MORRISTOWN	Bridge No. 89
HIGHWAY NO. TH 3	Log Sta.
	Surv. Sta. 117+67
TH 3 OVER LAKE LAMOILLE	
BEARING DEVICE DETAILS ALT. "A"	
Designed by D. BURLEY	Drawn by L. GRAHAM
Checked by G.V.S. date 10/82	Bridge Design Supervisor R.S. HALPT date 11/82
PROJECT MORRISTOWN	PROJECT NO. BRS 0238(2)
Bridge Sheet No. BR 109	Sheet 22 of 85

BRUNING 44-151 40151
BR-6

ALTERNATE "B"

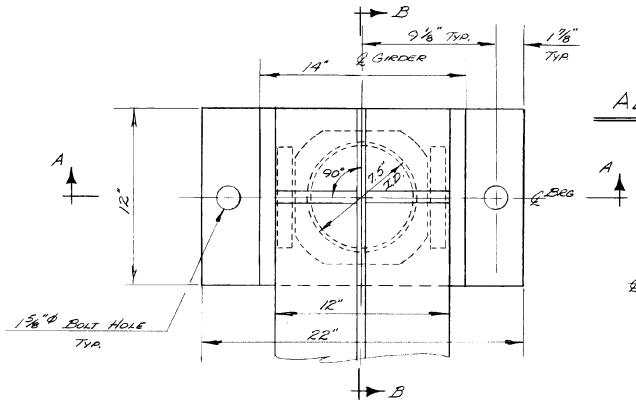

BEARING DEVICE PLAN (EXPANSION) (ABUTMENT)
SCALE: 1/4" = 1"

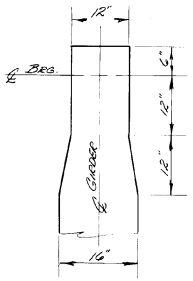

BOTTOM FLANGE TAPER DETAIL @ ABUTMENTS
ALTERNATE "B"
SCALE 1"=1'-0"

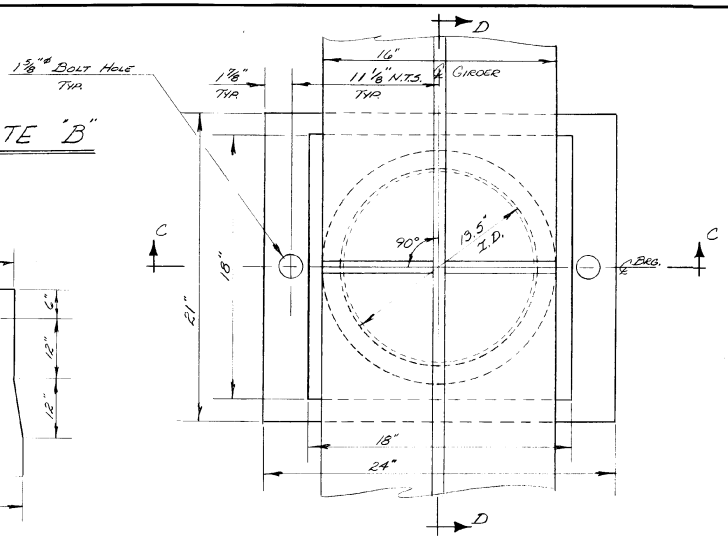

BEARING DEVICE PLAN (FIXED) (PIER)
SCALE: 1/4" = 1"

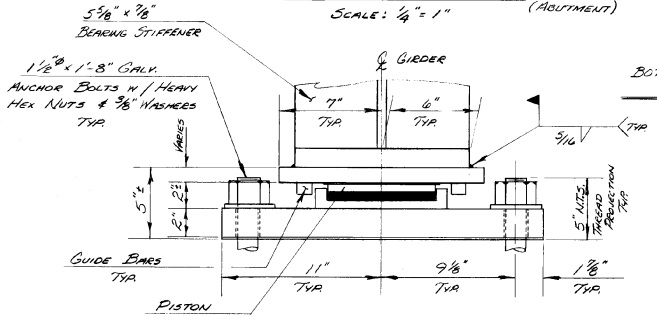

SECTION A-A
SCALE: 1/4" = 1"

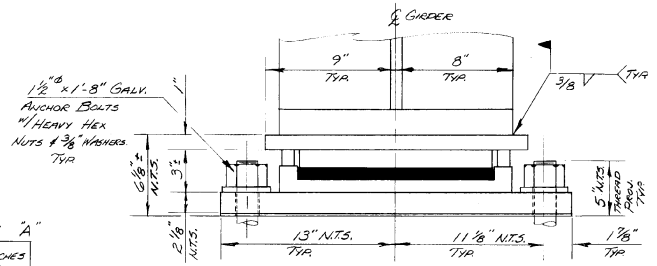

SECTION C-C
SCALE: 1/4" = 1"

DIMENSION "A"

DEGREES (F)	INCHES *
30	1/2"
45	5/16"
60	1/8"
75	-1/16"

* POSITIVE DIMENSION "A" IS MEASURED TOWARDS FIXED PIER PRIOR TO DECK POUR. DIMENSION "A" IS FROM ℄ SOLE PL TO ℄ BASE PL.

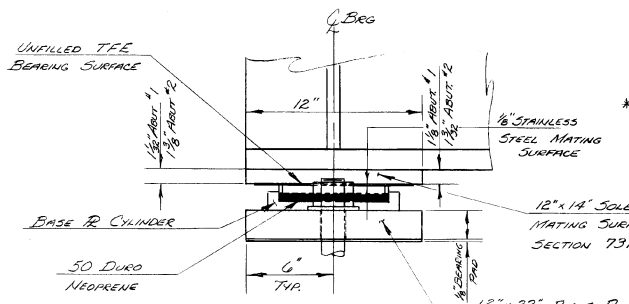

SECTION B-B
SCALE: 1/4" = 1"

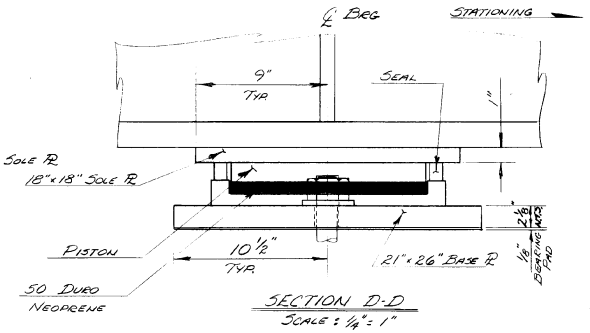

SECTION D-D
SCALE: 1/4" = 1"

NOTES

1. UNLESS OTHERWISE NOTED, ALL STEEL IN THE BEARING DEVICE ASSEMBLIES SHALL BE A-36 GALVANIZED OR THERMAL SPRAYED WITH PURE ZINC COATING AS PER SECTION 731.06.
2. THE WELD BETWEEN THE SOLE PLATE AND BOTTOM FLANGE SHALL BE SMAW 8018(C3). AREAS OF GALVANIZING ON THE SOLE PLATE DESTROYED IN THE WELDING PROCESS SHALL BE PAINTED WITH A ZINC RICH PAINT.
3. ANCHOR BOLTS, NUTS AND WASHERS SHALL CONFORM WITH THE REQUIREMENTS OF SECTION 714.16. BOLTS SHALL BE 1 1/2"Ø X 1'-8" LONG WITH HEAVY HEX NUTS AND 3/8" WASHERS (GALVANIZED ASTM A-153). ANCHOR BOLTS PAID FOR UNDER ITEM 506.99, "BEARING DEVICE ASSEMBLY.
4. BEARING DEVICE DESIGN, MANUFACTURE, AND MATERIAL SPECIFICATIONS SHALL CONFORM TO THE GENERAL SPECIAL PROVISIONS, SECTION 731.11.
5. BEARING DEVICES SHALL BE PAID FOR AT THE UNIT BID PRICE FOR ITEM 506.99, "BEARING DEVICE ASSEMBLY".
6. CONCRETE SURFACES UNDER BEARINGS SHALL BE LEVEL.
7. ALTERNATE CONFIGURATIONS MAY BE SUBMITTED FOR APPROVAL PROVIDED THE DESIGN LOADS ARE SATISFIED AND THE ANCHOR BOLT SYSTEM AND PLACEMENT IS MAINTAINED.
8. THE MANUFACTURER OF THE BEARING DEVICE ASSEMBLY, ITEM 506.99, SHALL, IN ADDITION TO THE TYPE D CERTIFICATION REQUIRED IN SECTION 731.05, CERTIFY THAT THE UNITS SUPPLIED ARE DESIGNED TO MEET THE LOADING REQUIREMENTS INDICATED BELOW.

	BEARING	TRANSVERSE	LONGITUDINAL
ABUT. # 1	153 K	7 K	8 K
ABUT. # 2	153 K	7 K	8 K
PIER	466 K	12 K	14 K

9. BEARING BASE PLATES SHALL BE PLACED ON A 1/8" FABRIC PAD AS SPECIFIED IN SECTION 731.01.
10. ALTERNATE "C" SHALL BE A COMBINATION OF PRE-FORMED FABRIC PAD BEARINGS AT THE ABUTMENTS PER SECTION 731.10 AND SHEET BR 109, AND FLOATING (POT TYPE) BEARINGS AT THE PIER PER SECTION 731.11 AND SHEET BR 109A.
11. IF A BEARING DEVICE SCHEME OTHER THAN ALTERNATE "A" IS USED, THE BRIDGE SEAT ELEVATIONS WILL HAVE TO BE ADJUSTED ACCORDINGLY.

STATE OF VERMONT
AGENCY OF TRANSPORTATION

TOWN OF MORRISTOWN	Bridge No. B-9
	Log Sta.
HIGHWAY NO. TOWN HIGHWAY #3	Surv. Sta. 117+67
TOWN HIGHWAY #3 OVER LAKE LAMOILLE	
BEARING DEVICE DETAILS (ALTERNATE B)	
Designed by D. BURLEY	Drawn by M. GARCIA
Checked by R. GENDRON date 4/93	Bridge Design Supervisor R.S. HAUPT date 3/93
PROJECT MORRISTOWN	PROJECT NO. BRS 0238(2)
Bridge Sheet No. BR 109A Sheet 22-A of 85	

BRUNING 44 (31) 40151
BR-6

ITEM	NO. PIECES	SIZE	LENGTH	MARK	TYPE	A	B	C	D	E	F	G	H	J	K	R	O
				SUPERSTRUCTURE													
				GRADE 60													
1																	
2	1098	5	32-0	SS01	STR												
3	704	5	32-1	SS02	STR												
4	120	5	29-3	SS03	STR												
5	8	5	28-3	SS04	STR												
6																	
7	88	8	35-0	SB01	STR												
8																	
9				GRADE 40													
10	530	5	5-1	SS05	SS	0-10	1-2	1-1	1-2			0-10					
11	*59	5	7-4	SS06	SS	0-10	2-1	1-6	2-1			0-10					
12																	
13				ABUTMENT #1													
14				GRADE 60													
15	*34	5	9-0	1A501	STR												
16	33	5	11-0	1A502	STR												
17	6	5	6-0	1A503	STR												
18	10	5	4-6	1A504	STR												
19	4	5	10-0	1A505	STR												
20	46	5	16-10	1A506	STR												
21																	
22																	
23	*52	8	4-0	1A801	STR												
24																	
25	33	5	8-3	1A507	17		2-0	4-3	2-0								
26	29	5	7-10	1A508	17		5-0	0-10	2-0								
27	29	5	3-3	1A509	17		1-9	1-6	/								
28																	
29	21	8	5-9	1A802	7	0-11		2-10	2-0	/	/	2-0	0-8	2-0	/		
30																	
31																	
32																	
33				WINGWALL #1													
34				GRADE 60													
35	4	5	17-0	1W501	STR												
36	8	5	21-9	1W502	STR												
37	18	5	3-9	1W503	STR												
38	18	5	9-2	1W504	STR												
39	19	5	5-10	1W505	STR												
40	19	5	5-0	1W506	STR												
41	7	5	21-9	1W507	STR												
42	8	5	19-6	1W508	STR												
43	9	5	18-0	1W509	STR												
44																	
45	*19	7	7-0	1W701	STR												
46																	
47	27	8	4-0	1W801	STR												
48																	
49	17	5	14-0	1W510	17		11-6	3-0	/								
50	18	5	9-3	1W511	17		6-3	3-0	/								
51																	
52				GRADE 40													
53	19	5	6-2	1W512	T2	/	2-0	1-1	1-6	1-7	/						
54																	
55																	
56				WINGWALL #2													
57				GRADE 60													
58	14	5	9-0	2W501	STR												
59	14	5	13-0	2W502	STR	(USE CUT OFFS TO OBTAIN 20 2W502'S)											
60																	
61	12	8	4-0	2W801	STR												
62																	
63	14	5	9-0	2W503	19		6-6	2-6	/			3-0		6-0			
64																	
65				GRADE 40													
66	14	5	9-10	2W504	17		2-0	0-10	2-0								
67																	
68																	
69																	
70																	
71																	
72																	
73																	
74																	
75																	
76																	
77																	
78																	
79																	
80																	

ITEM	NO. PIECES	SIZE	LENGTH	MARK	TYPE	A	B	C	D	E	F	G	H	J	K	R	O
				ABUTMENT #2													
81				GRADE 60													
82	30	5	17-2	2A501	STR												
83	34	5	3-9	2A502	STR												
84	48	5	17-2	2A503	STR												
85	34	5	10-9	2A504	STR												
86	34	5	13-4	2A505	STR												
87	*29	5	5-0	2A506	STR												
88	18	5	17-2	2A507	STR												
89																	
90	*35	6	7-6	2A601	STR												
91																	
92	51	8	4-0	2A801	STR												
93																	
94	34	5	6-7	2A508	17		2-0	2-7	2-0								
95	34	5	4-6	2A509	22		1-9	0-9	0-10	1-2			0-7		0-7		
96																	
97	*35	6	10-3	2A602	17		5-9	4-6	/								
98																	
99	21	8	5-9	2A802	7	0-11		2-10	2-0	/	/		2-0	/	2-0		
100																	
101																	
102				WING WALL #3													
103				GRADE 60													
104	42	5	7-0	3W501	STR												
105	7	5	4-0	3W502	STR												
106	14	5	11-5	3W503	STR												
107	7	8	7-6	3W801	STR												
108																	
109	*9	7	8-6	3W701	17		5-9	2-9	/								
110																	
111				WING WALL #4													
112				GRADE 60													
113	13	5	17-6	4W501	STR												
114	19	5	5-9	4W502	STR												
115	10	5	27-0	4W503	STR	(USE CUTOFFS TO OBTAIN 18 4W503'S)											
116	10	5	21-0	4W504	STR	(USE CUTOFFS TO OBTAIN 18 4W504'S)											
117	18	5	17-6	4W505	STR												
118	10	5	20-0	4W506	STR	(USE CUTOFFS TO OBTAIN 20 4W506'S)											
119																	
120	37	8	4-0	4W801	STR												
121	*20	8	1-6	4W802	STR												
122																	
123	2	5	20-8	4W509	19		19-3	1-5					10-8		16-0		
124																	
125	19	7	11-9	4W701	17		8-3	3-0	/								
126	19	7	8-9	4W702	17		5-9	3-0	/								
127																	
128																	
129																	
130																	
131																	
132																	
133				PIER													
134				GRADE 60													
135	12	5	35-6	1P501	STR												
136	37	5	11-6	1P502	STR												
137	54	5	29-2	1P503	STR												
138																	
139	12	9	35-6	1P901	STR												
140																	
141	*137	10	23-9	1P002	STR												
142																	
143																	
144																	
145																	
146																	
147	*73	9	14-0	1P902	1	1-3	11-6						1-3		0-11¾		
148																	
149	*137	10	10-5	1P1001	1	1-5	9-0						/		1-03/4		
150																	
151																	
152				GRADE 40													
153	*54	5	7-10	1P504	17		2-6	2-10	2-6								
154	52	5	8-5	1P505	10	2-0	4-5	2-0								1-5	2-10
155	150	5	13-3	1P506	T1	0-5½	2-10	3-4	2-10	3-4		0-5½					
156																	
157																	
158																	
159																	
160																	

ITEM	NO. PIECES	SIZE	LENGTH	MARK	TYPE	A	B	C	D	E	F	G	H	J	K	R	O
						APPROACH SLAB #1											
161						GRADE 60											
162	16	5	29-6	1AS501	STR												
163																	
164	*42	9	15-9	1AS901	1	1-3	14-6				/			11¼			
165																	
166																	
167						APPROACH SLAB #2												
168						GRADE 60												
169	16	5	29-6	2AS501	STR												
170																	
171	41	9	15-9	2AS901	1	1-3	14-6				/			11¼			
172																	
173																	
174																	
175																	
176																	
177																	
178																	
179																	
180																	

ASTM STANDARD REINFORCING BARS

BAR SIZE DESIGNATION	WEIGHT POUNDS PER FOOT	NOMINAL DIMENSIONS ROUND SECTION		
		DIAMETER INCHES	CROSS SECTIONAL AREA SQ. INCHES	PERIMETER INCHES
#3	.376	.375	.11	1.178
#4	.668	.500	.20	1.571
#5	1.043	.625	.31	1.963
#6	1.502	.750	.44	2.356
#7	2.044	.875	.60	2.749
#8	2.670	1.000	.79	3.142
#9	3.400	1.128	1.00	3.544
#10	4.303	1.270	1.27	3.990
#11	5.313	1.410	1.56	4.430
#14	7.65	1.693	2.25	5.32
#18	13.60	2.257	4.00	7.09

TYPICAL BAR BENDS

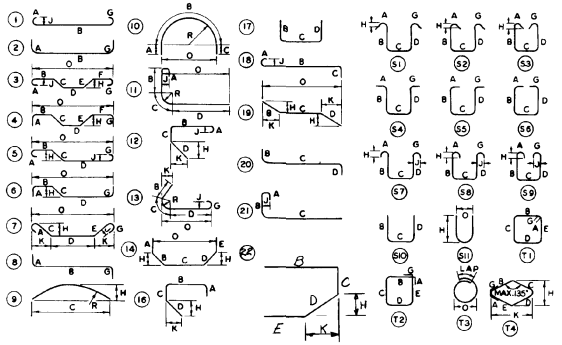

NOTES

1. UNLESS OTHERWISE DESIGNATED, ALL BAR REINFORCEMENT FOR CONCRETE IN SIZES UP TO AND INCLUDING NO. 18 SHALL CONFORM TO THE REQUIREMENTS OF THE "SPECIFICATIONS FOR DEFORMED BILLET-STEEL BARS FOR CONCRETE REINFORCEMENT," AASHTO M 31 (ASTM A615-74), GRADE 60.
2. FOR TYPICAL BENDING DETAILS, RECOMMENDED PIN DIAMETER "D" OF BENDS AND HOOKS AND OTHER STANDARD PRACTICE SEE CURRENT CONCRETE REINFORCING STEEL INSTITUTE "MANUAL OF STANDARD PRACTICE."
3. BARS WHICH REQUIRE MORE ACCURATE BENDING THAN STANDARD PRACTICES SHOULD HAVE LIMITS INDICATED.
4. ALL DIMENSIONS ARE OUT TO OUT OF BAR EXCEPT "A" AND "G" ON STANDARD 180° AND 135° HOOKS.
5. "J" DIMENSION ON 180° HOOKS TO BE SHOWN ONLY WHERE NECESSARY TO RESTRICT HOOK SIZE. OTHERWISE STANDARD HOOKS ARE TO BE USED.
6. "H" DIMENSION ON STIRRUPS TO BE SHOWN ONLY WHEN NECESSARY TO MAINTAIN CLEARANCES.
7. WHERE SLOPE DIFFERS FROM 45° DIMENSIONS "H" AND "K" MUST BE SHOWN.

* DENOTES ONE EXTRA BAR ADDED FOR TESTING PURPOSES.

REV. NO.	MADE BY	DATE	DESCRIPTION

STATE OF VERMONT
AGENCY OF TRANSPORTATION

TOWN OF MORRISTOWN	BRIDGE NO. 89
HIGHWAY NO. TH 3	LOG STA.
	SURV. STA. 117+67
TH 3 OVER LAKE LAMOILLE	
REINFORCING STEEL SCHEDULE	
DESIGNED BY D. BURLEY	DRAWN BY L. GRAHAM
CHECKED BY G.V.S DATE 10/82	BRIDGE DESIGN SUPERVISOR R.S. HAUPT DATE 11/82
PROJECT MORRISTOWN	PROJECT NO. BRS0238(2)
BRIDGE SHEET NO. BR110	SHEET 23 OF 35

BRUNING 44-131-40151

BR-5

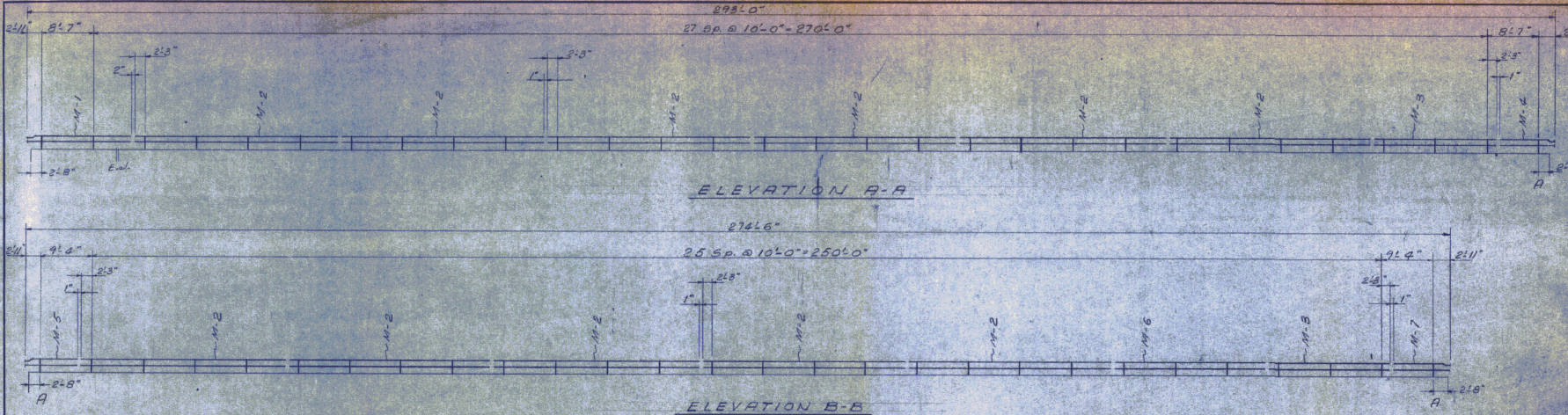

ELEVATION A-A

ELEVATION B-B

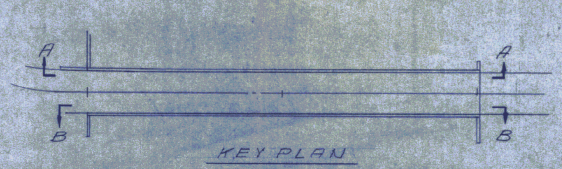

KEY PLAN

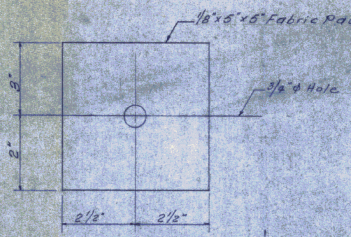

PAD DETAIL

At Shelf Bracket under Rail, Post A only, See Elev. A-A & B-B
6-Req'd

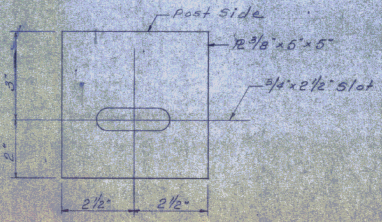

SHELF BRACKET

Post "A" only
6-Req'd

BILL OF MATERIAL

282-586 BR-586

58	6"x6"x 5/16" Tube x 2'-2" lg.
58	12 1"x 9"x 1'-1"
58	12 5/16"x5 1/8"x5 3/8"
11.6	12 3/8"x 5"x5"
11.6	3/8"ϕx 1 1/2" Hex. Hd. Bolt, 1-nut & 2-cer. Wash.
32	Splice Assemblies w/ 3/4"ϕx 3" Bolts
58	Anchor Bolt Assemblies
2	6"x3"x1/2" Tube x 19'-7" lg. (M-1)
22	" x 40'-0" lg. (M-2)
2	" x 25'-0" lg. (M-3)
2	" x 10'-0" lg. (M-4)
2	" x 10'-6" lg. (M-5)
2	" x 30'-0" lg. (M-6)
2	" x 11'-9" lg. (M-7)
6	1/8"x5"x5" Fabric Pad

RECEIVED OCT 9 1984
CK'D BY
RESUBMIT
BY
'D BY
ROVED
DATE 10/10/84

Project BES 0256(2)

ISSUE	DATE	DESCRIPTION
3	5/14/84	Rev. per Engineer
2	3/27/84	Rev. per Engineer
1	1/30/84	For approval

AMERICAN BRIDGE RAILING CORP.
93-95 BROOKLINE ST.
LYNN, MASS. 01902

State of Vermont
Agency of Transportation
Morristown
TH 3 over Lake Lamoille
Bridge No. 87
Bridge Railing Details

D Customer's Back & Bellucci, Inc.
D DRI. H.K. SCALE: nt.
BY CHI. B. TP. ABR. 586

BR-586

Sh. 1

24

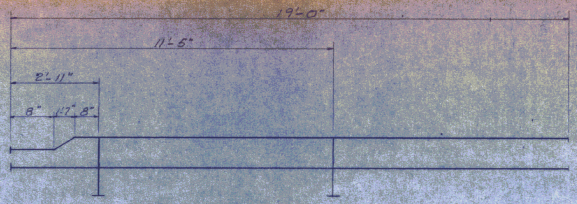

M-1
1-Req'd

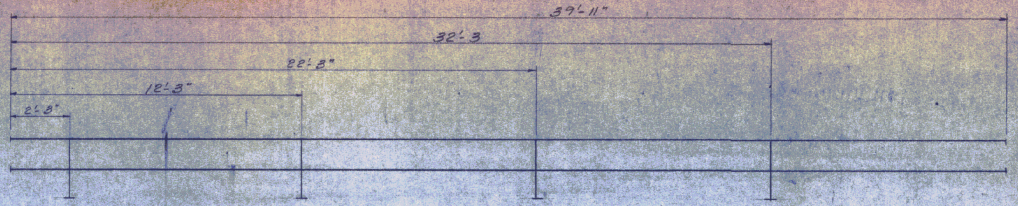

M-2
11-Req'd

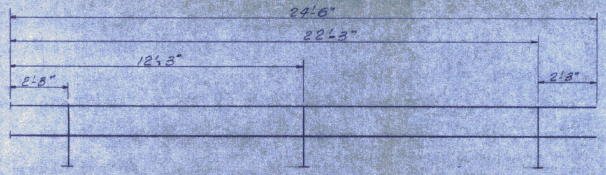

M-3
1-Req'd

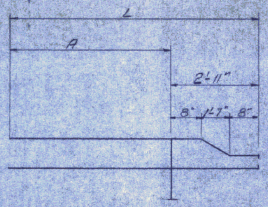

MK	Quan.	A	L
M-4	1	6'-3"	9'-2"
M-7	1	7'-0"	9'-11"

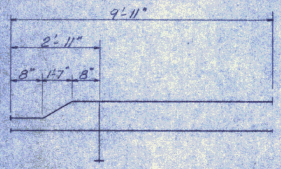

M-5
1-Req'd

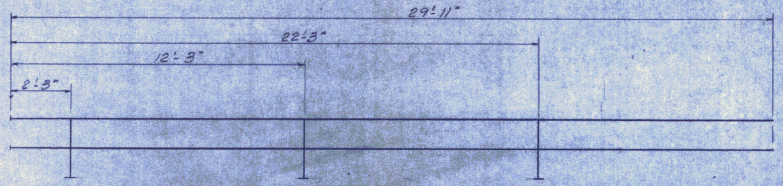

M-6
1-Req'd

1. All Tubing shall be 6"x3"x1/4" Wall.
2. Posts shown for ℄ location of 3/4"ϕ Hole in Tubing.
3. Tubes shall be drilled in field.

RECEIVED OCT 9 1984
CK'D BY ____ CK'D BY ____
RESUBMIT ____ APPROVED ____
BY ____ DATE 10/10/84
Alan W. Couch

Project BRS 0288(2)

ISSUE	DATE	DESCRIPTION	BY
2	3/29/84	Rev. per Engineer	D.
1	1/30/84	For approval	D.

AMERICAN BRIDGE RAILING CORP.
93-95 BROOKLINE ST.
LYNN, MASS. 01902

State of Vermont
Agency of Transportation
Morristown
TH3 over Lake Lamoille
Bridge No. 89
Bridge Railing Details

Customer: Beck & Bellucci, Inc.

DR: H.R. SCALE: ~
CH: B.M. ASR #: -586

BR-586

Sh. 2

25

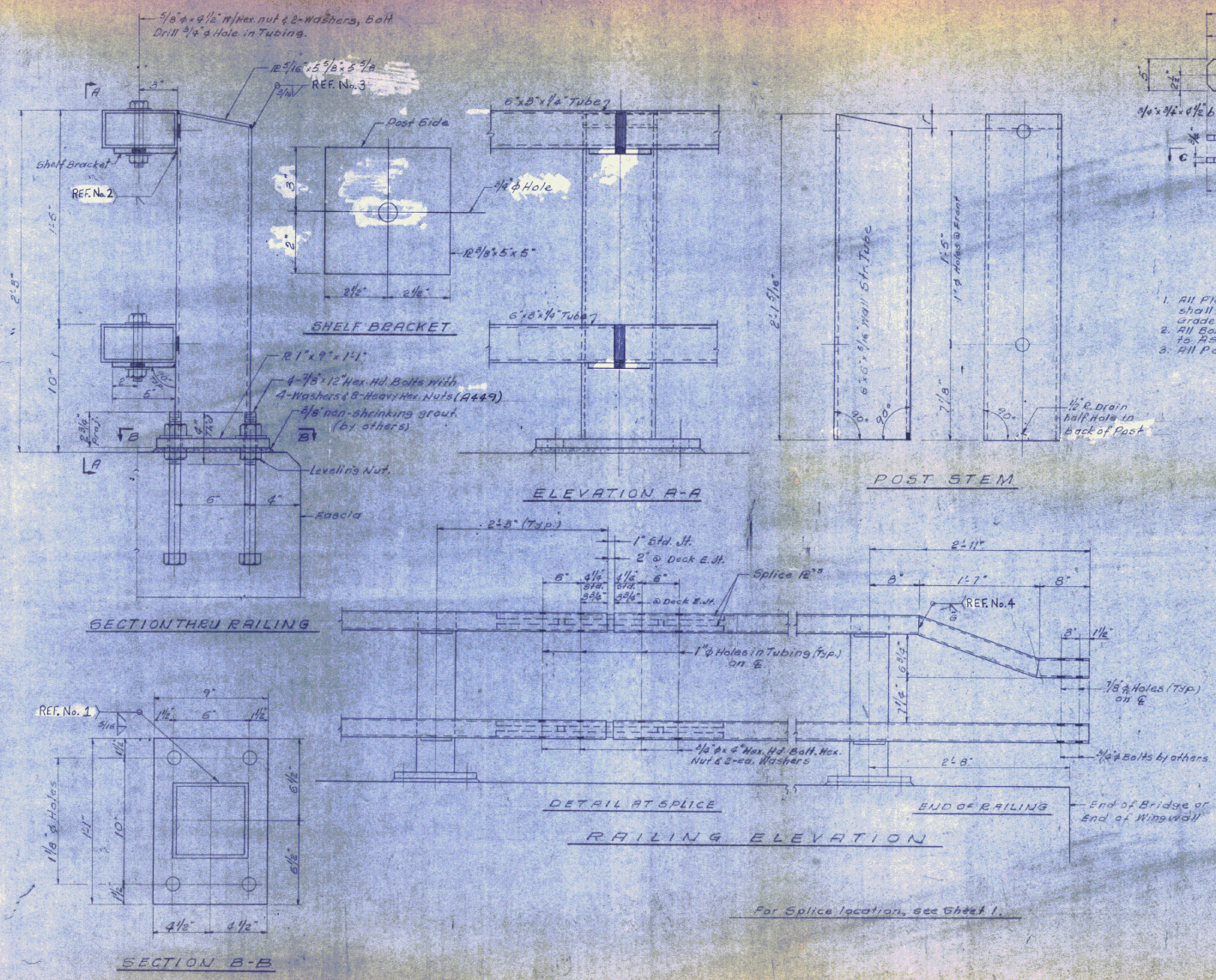

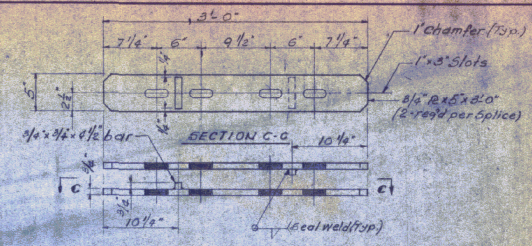

SPLICE PL DETAIL

NOTES:

1. All Plates, bars and angles shall be A-36 Steel. Unless otherwise noted, all bolts shall be ASTM A307. Structural tubing shall be ASTM A500 Cold-formed Grade B as modified in Section 732.04 (a).
2. All Box Beam Bridge Railing, components, Anchor-Bolts shall be galvanized to ASTM A128 after fabrication.
3. All Posts shall be set normal to Grade.

RECEIVED OCT 9 1984
CK'D BY ____ CK'D BY ____
RESUBM. ____ APPROVED ____
BY ____ DATE ____
[signature] Couch 10/10/84

For Splice location, see Sheet 1.

Project BRS 0238(2)

ISSUE	DATE	DESCRIPTION	BY
3	5/14/84	Rev. per Engineer	D
2	3/29/84	Rev. per Engineer	D
1	1/30/84	For approval	D

AMERICAN BRIDGE RAILING CORP.
93-95 BROOKLINE ST.
LYNN, MASS. 01902

State of Vermont
Agency of Transportation
Morristown
TH 3 over Lake Lamoille
Bridge No. B7
Bridge Railing Details

Customer - Beck & Bellucci, Inc.

DR: N.R. SCALE: ½ BR-586
CH: B.G. ASR: 586

26

Sh. 3

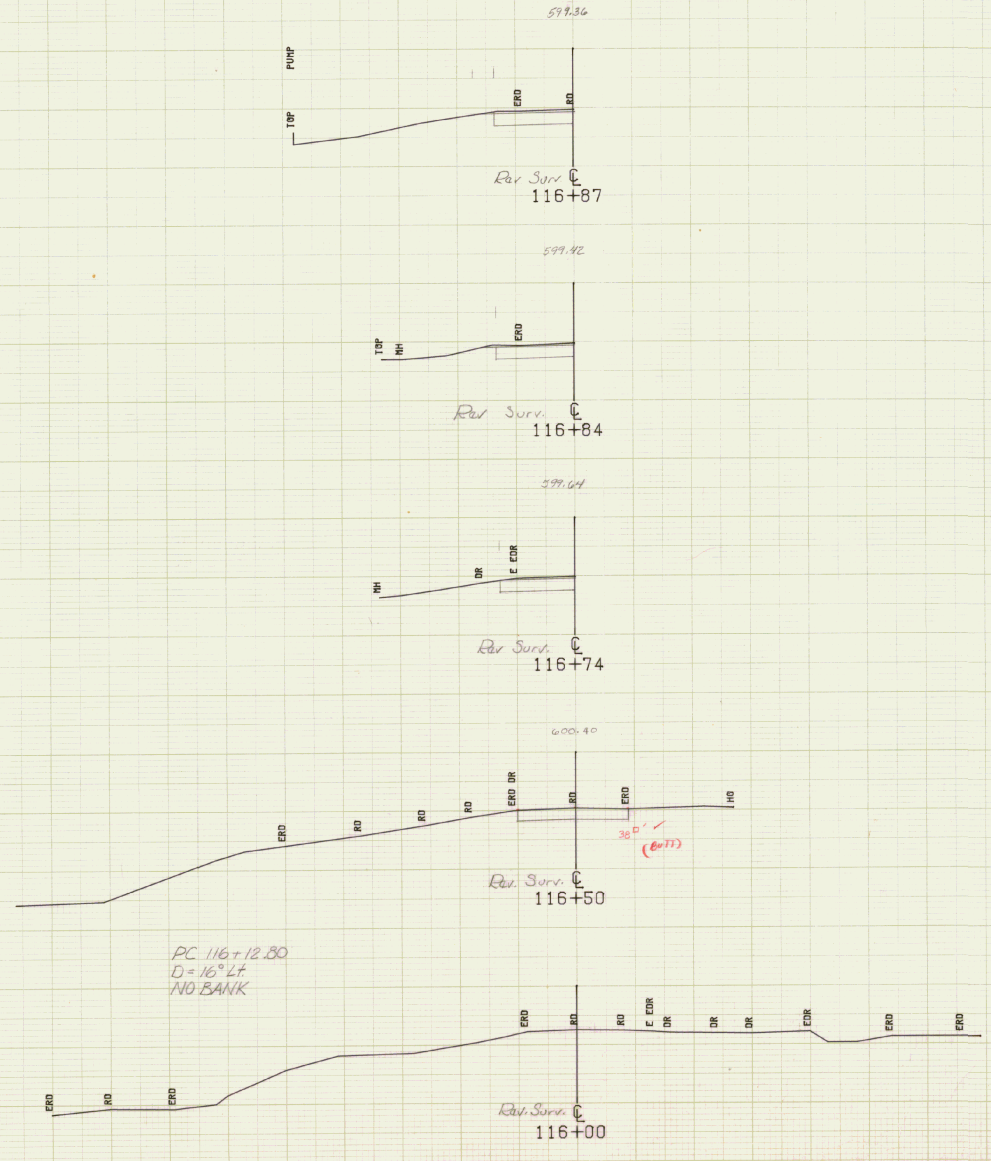

FROM STA. 116+00 TO STA. 116+87
PROJECT NAME MORRISTOWN MAIN
NO. BRS0238(2) PLOTTED 08/20/81
SURVEYED BY FANTONI AUGUST 1981
SHEET 64 OF 85 SHEETS

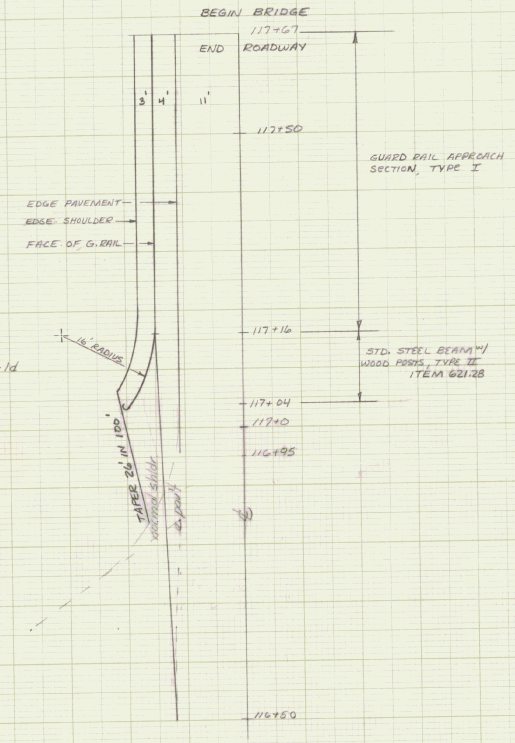

GUARDRAIL DETAIL

1" = 10'

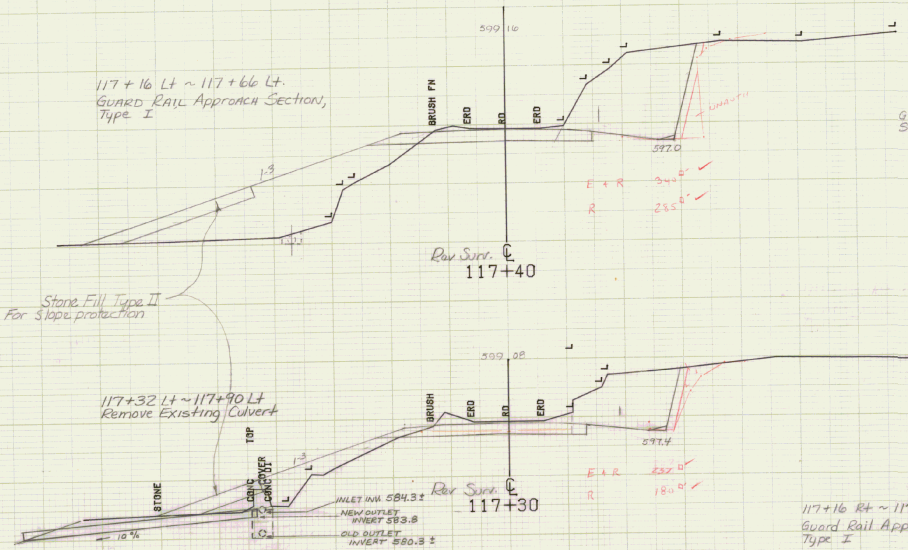

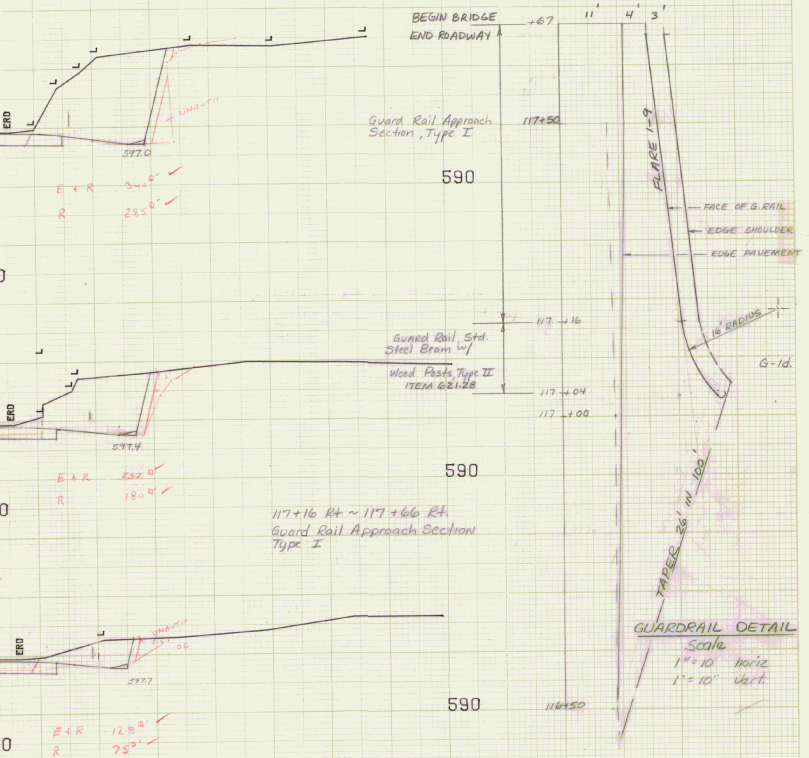

FROM STA. 117+00	TO STA. 117+40
PROJECT NAME	MORRISTOWN MAIN
NO.	BRS0238(2)
SURVEYED BY	FANTONI
SHEET 65 OF 95 SHEETS	

PLOTTED 08/20/81
AUGUST 1981

SCALE 10 FEET

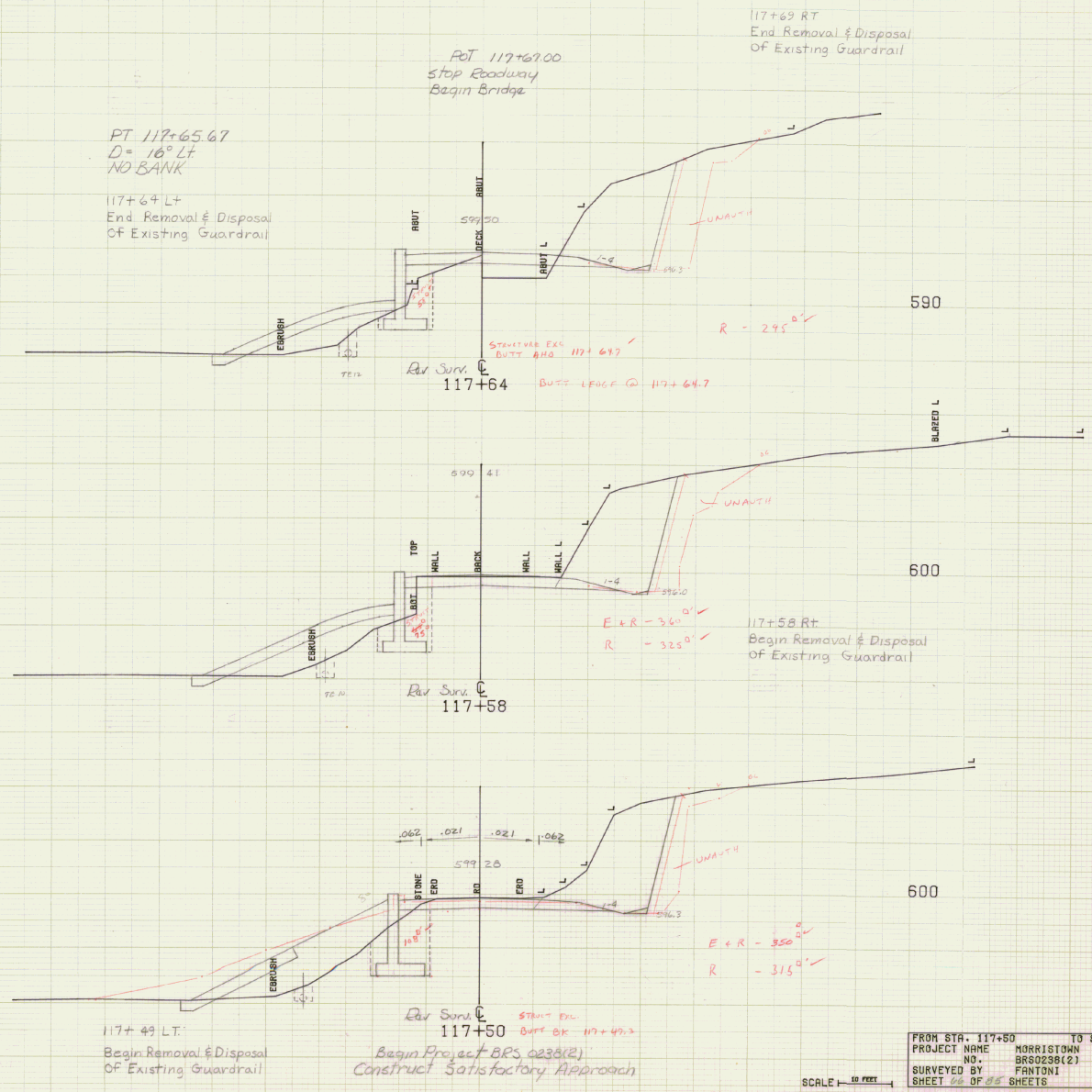

FROM STA. 117+50		TO STA. 117+64	
PROJECT NAME	MORRISTOWN	MAIN	
NO.	BRS0238(2)		PLOTTED 08/20/81
SURVEYED BY	FANTONI		AUGUST 1981
SHEET 66 OF 85 SHEETS			

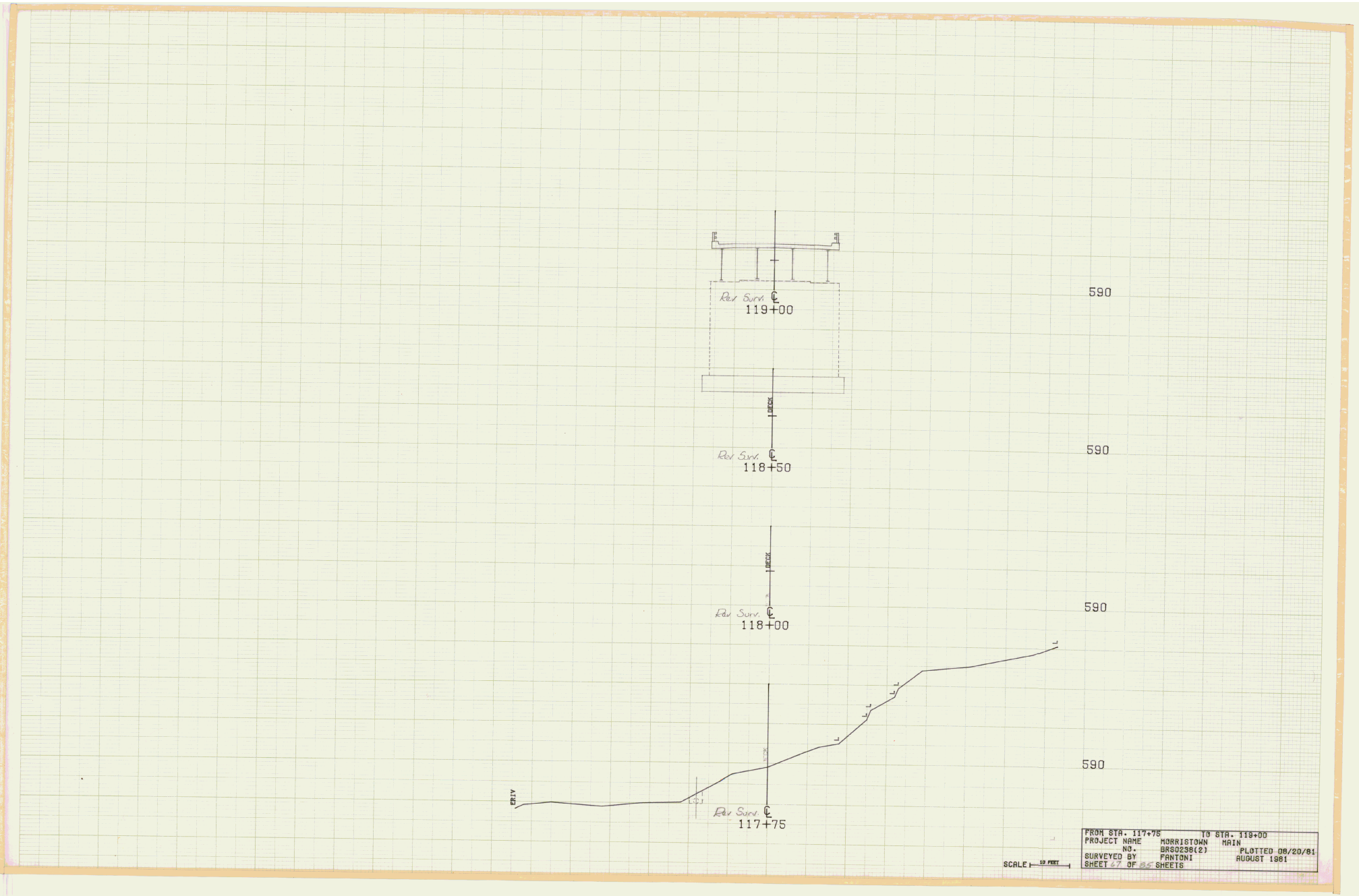

FROM STA. 117+75		TO STA. 119+00	
PROJECT NAME	MORRISTOWN	MAIN	
NO.	BRS0238(2)		PLOTTED 08/20/81
SURVEYED BY	FANTONI		AUGUST 1981
SHEET 67 OF 85 SHEETS			

120+25 LT
Begin Removal & Disposal
Of Existing Guardrail

120+25 RT
Begin Removal & Disposal
Of Existing Guardrail

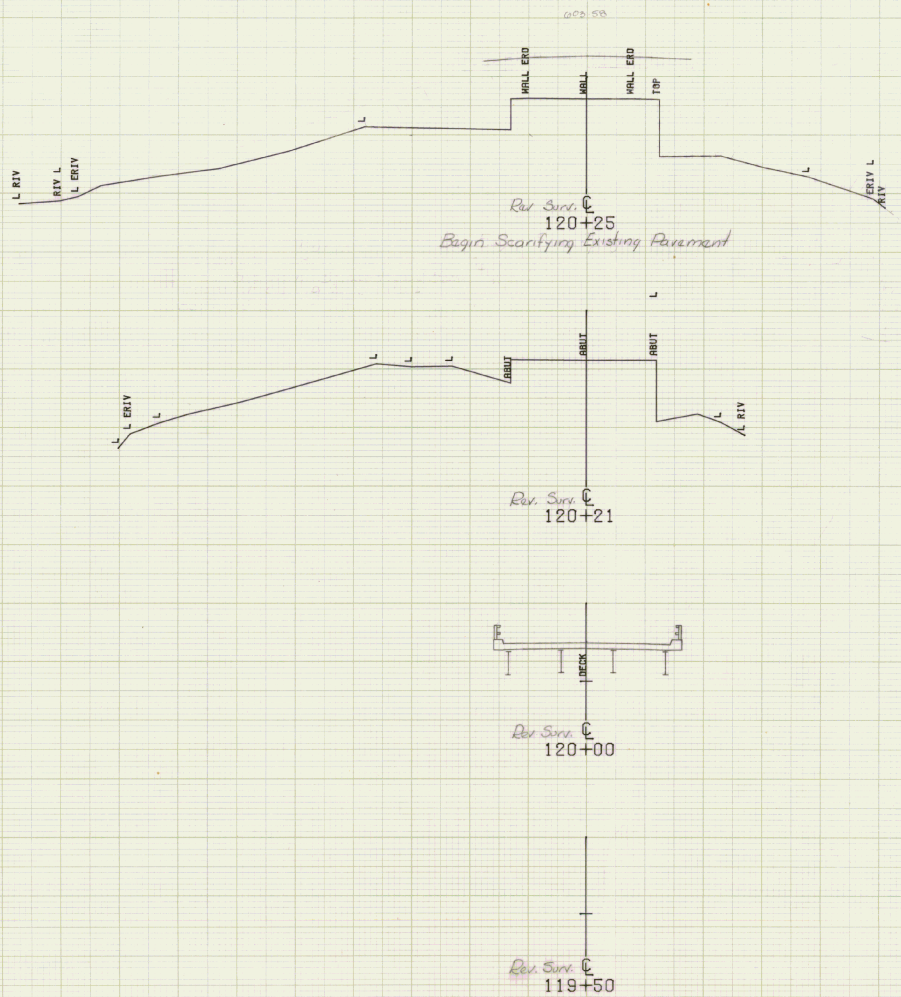

590

580

590

590

SCALE 10 FEET

FROM STA. 119+50		TO STA. 120+25
PROJECT NAME	MORRISTOWN	MAIN
NO.	BRS0238(2)	PLOTTED 08/20/81
SURVEYED BY	FANTONI	AUGUST 1981
SHEET 65 OF 83 SHEETS		

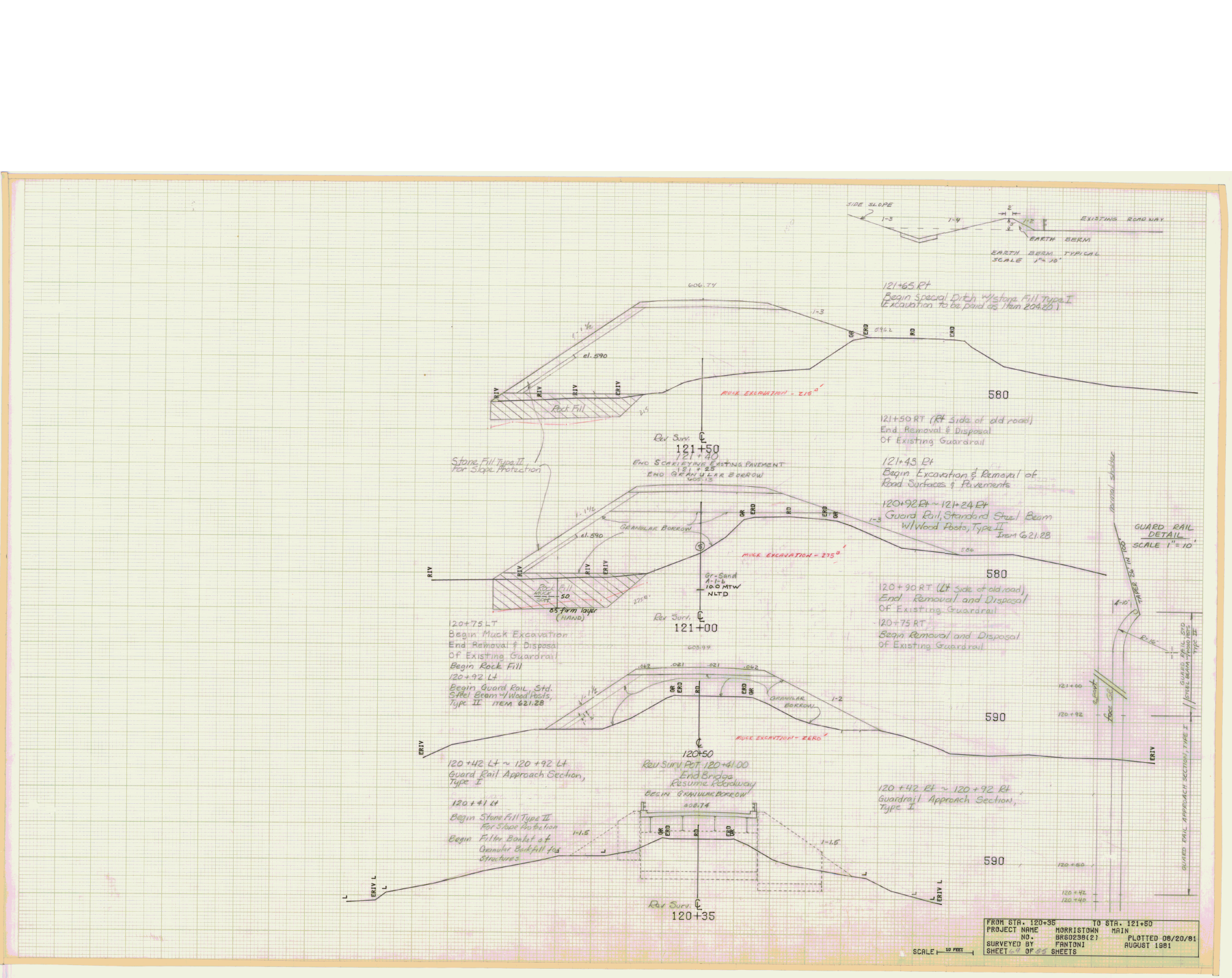
SIDE SLOPE
1-3
1-4
EXISTING ROADWAY
EARTH BERM
EARTH BERM TYPICAL
SCALE 1" = 10'
606.74
el. 590
Rock Fill
MUCK EXCAVATION = 215'
121+65 Rt
Begin Special Ditch w/Stone Fill Type I
(Excavation to be paid as Item 209.20)
580
121+50 Rt (Rt Side of old road)
End Removal & Disposal
Of Existing Guardrail
121+43 Rt
Begin Excavation & Removal of
Road Surfaces & Pavements
120+92 Rt ~ 121+24 Rt
Guard Rail, Standard Steel Beam
W/Wood Posts, Type II
Item 621.28
Stone Fill Type II
For Slope Protection
Rev Surv.
121+50
121+40
END SCARIFYING EXISTING PAVEMENT
121+25
END GRANULAR BORROW
605.13
GRANULAR BORROW
MUCK EXCAVATION = 275'
Gr-Sand
A-1-b
10.0 MTW
NLTD
Rock Fill
MUCK
EXC.
50
85 Firm layer
(HAND)
275'
Rev Surv.
121+00
120+75 LT
Begin Muck Excavation
End Removal & Disposa
Of Existing Guardrail
Begin Rock Fill
120+92 LT
Begin Guard Rail, Std.
Steel Beam w/ Wood Posts,
Type II ITEM 621.28
120+75 RT
Begin Removal and Disposal
Of Existing Guardrail
120+90 RT (Lt Side of old road)
End Removal and Disposal
Of Existing Guardrail
GUARD RAIL
DETAIL
SCALE 1" = 10'
normal slope
4:1
4-10'
R=16'
GUARD RAIL STD
STEEL BEAM WOOD POST
TYPE II
603.99
.062
.021
.021
.062
GRANULAR BORROW
1-2
590
MUCK EXCAVATION = ZERO'
120+50
120+42 LT ~ 120+92 LT
Guard Rail Approach Section,
Type I
Rev Surv. POT 120+41.00
End Bridge
Resume Roadway
BEGIN GRANULAR BORROW
602.74
120+41 LT
Begin Stone Fill Type II
For Slope Protection
Begin Filter Blanket of
Granular Backfill for
Structures
1-1.5
1-1.5
120+42 Rt ~ 120+92 Rt
Guardrail Approach Section,
Type I
590
Rev Surv.
120+35
GUARD RAIL APPROACH SECTION, TYPE I
120+60
120+42
120+40
FROM STA. 120+35 TO STA. 121+50
PROJECT NAME MORRISTOWN MAIN
NO. BRS0238(2) PLOTTED 08/20/81
SURVEYED BY FANTONI AUGUST 1981
SHEET 6 OF 85 SHEETS
SCALE 10 FEET

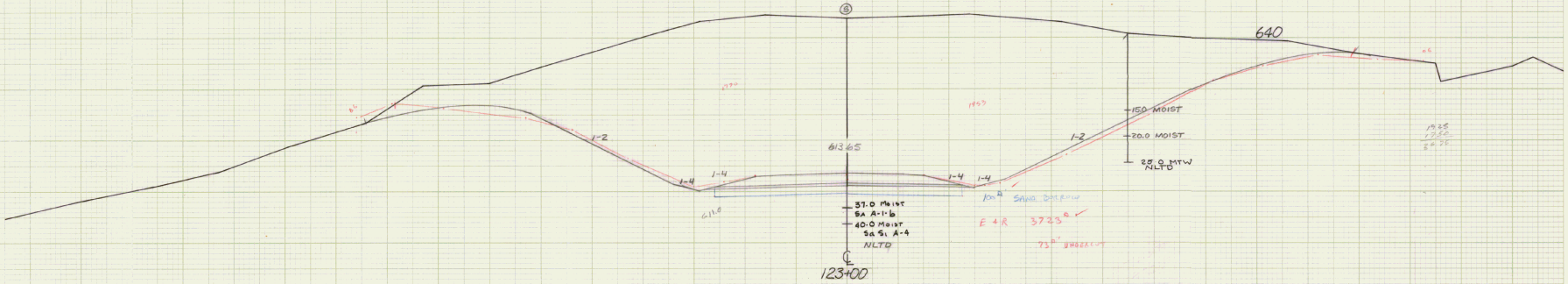

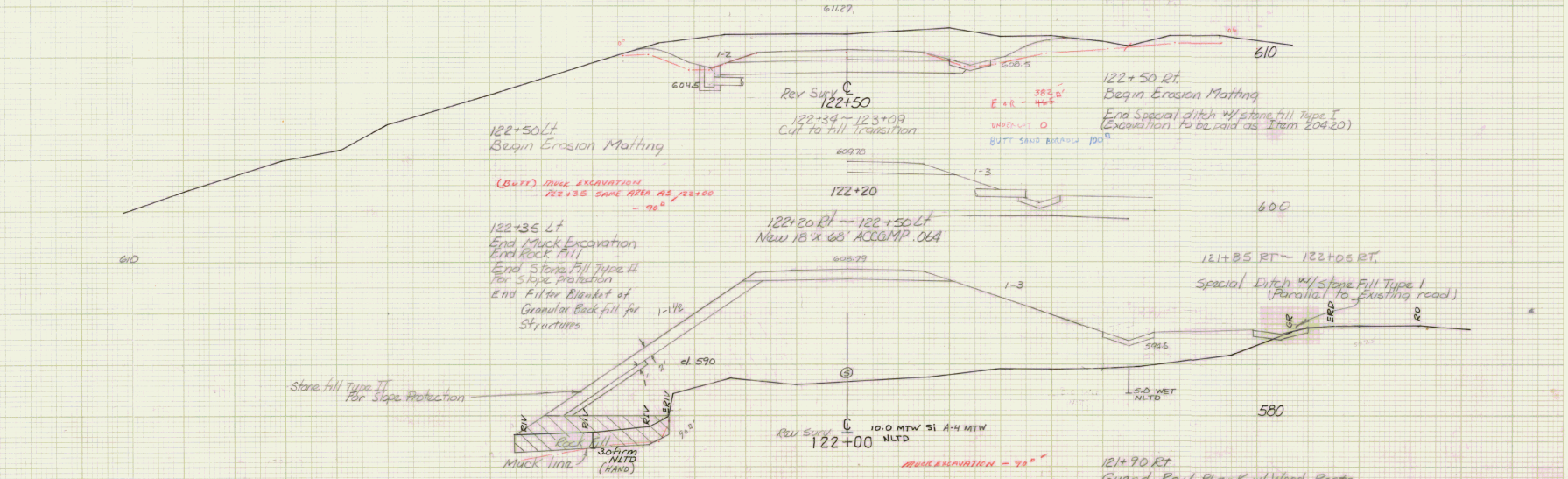

From Sta 122+00 to 123+00
Morristown
BRS 0238(2)
Surveyed by Fantoni
Sheet 70 of 85 Sheets

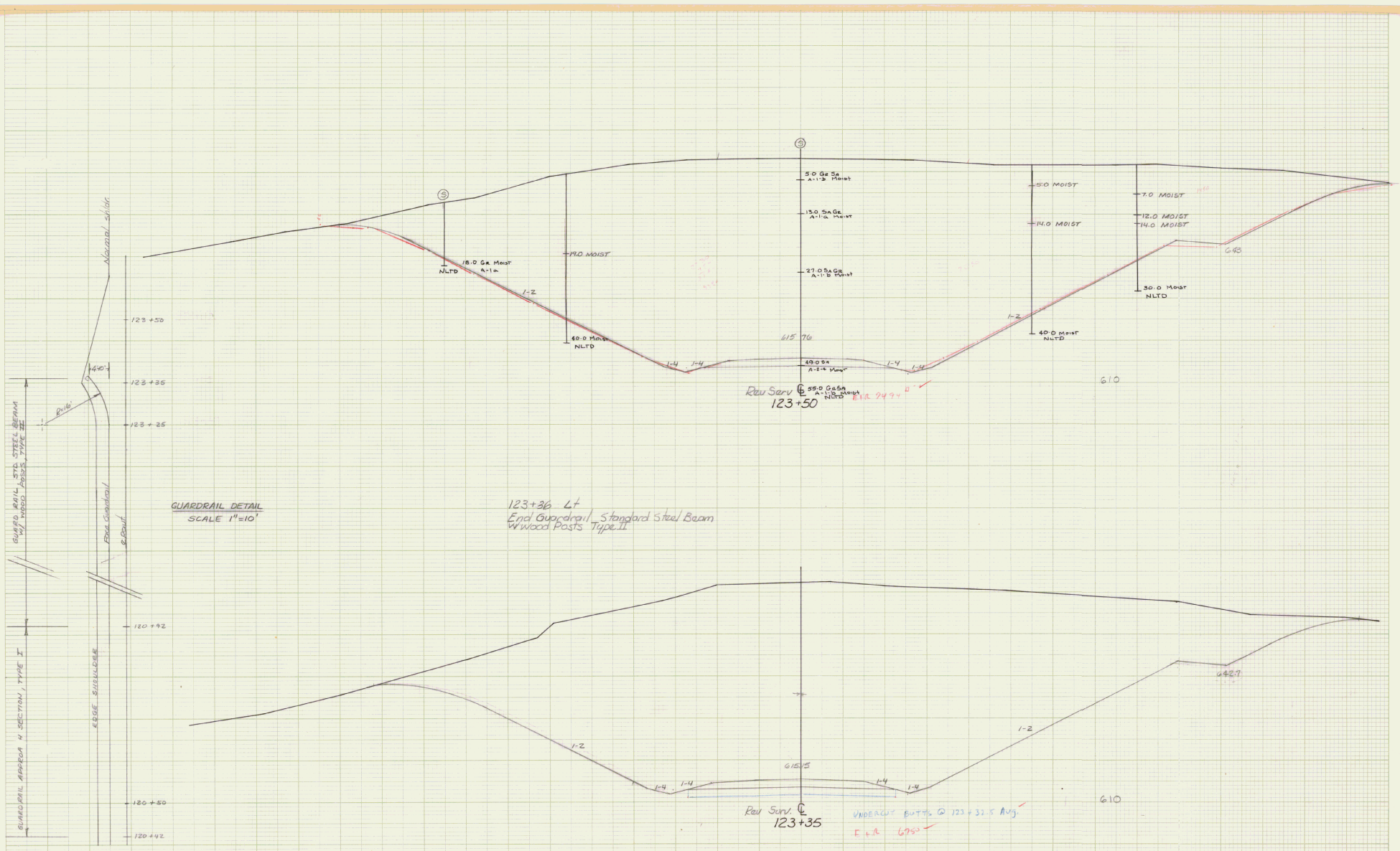

GUARDRAIL DETAIL
SCALE 1"=10'

123+36 Lt
End Guardrail, Standard Steel Beam
w/ Wood Posts Type II

UNDERCUT BUTTS @ 123+32.5 Avg.

From Sta. 123+35 to 123+50
Morristown
BRS 0238(2)
Surveyed By Fontpn
Sheet 71 OF 85 Sheets

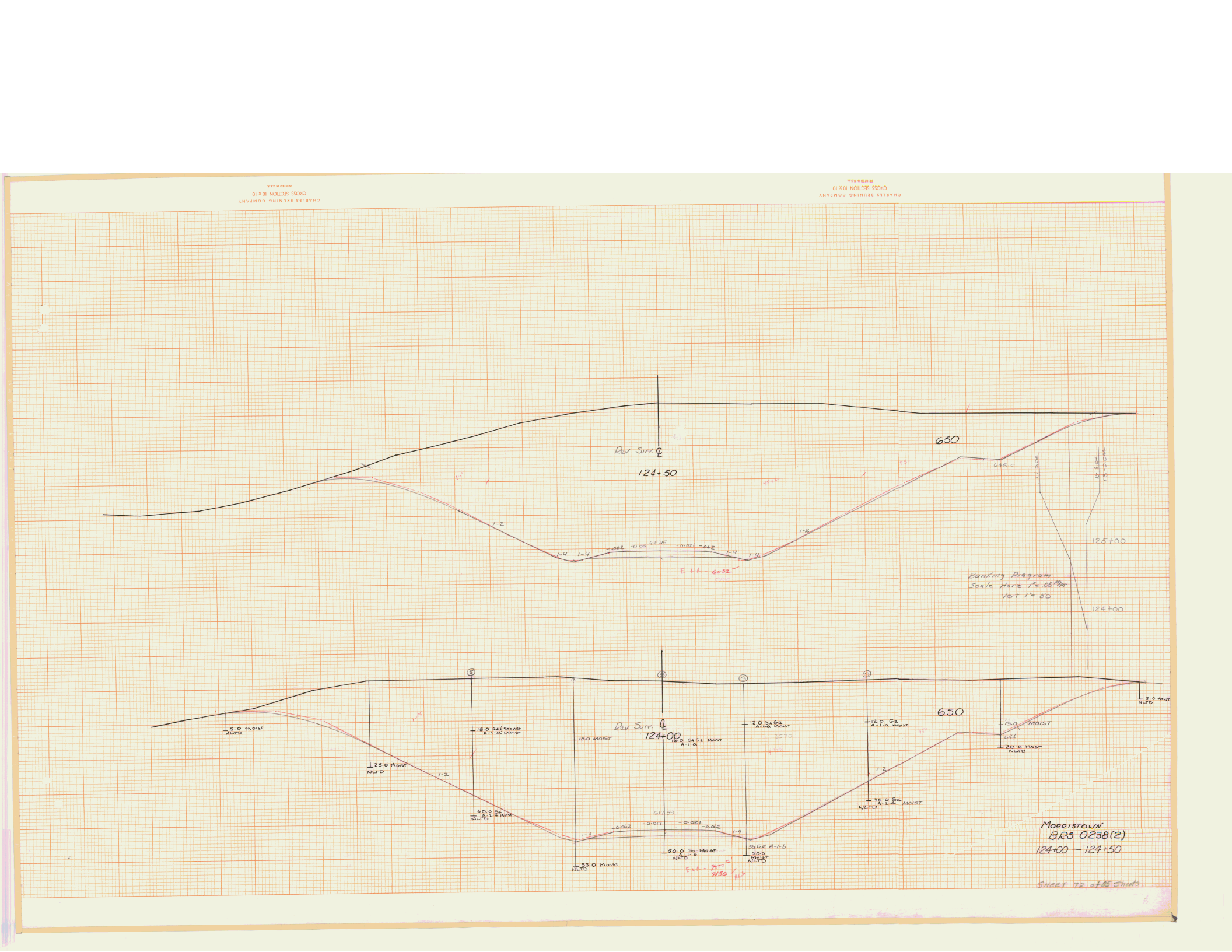
CHARLES BRUNING COMPANY
CROSS SECTION 10 X 10
REORDER NO. K-K-A
CHARLES BRUNING COMPANY
CROSS SECTION 10 X 10
REORDER NO. K-K-A
Rev Surf. ℄
124+50
650
645.0
1-2
1-4
1-4
-.062
-0.08
GUTTER
-0.021
-.062
1-4
1-4
1-2
E.H. 6032
125+00
Banking Diagram
Scale Horz 1"=.05 Mile
Vert 1"=50
124+00
5.0 Moist
NLTD
25.0 Moist
NLTD
1-2
15.0 Sa(Stones
A-1-a Moist
40.0 Sa
A-1-a Moist
NLTD
18.0 MOIST
Rev Surf. ℄
124+00
18.0 Sa Gr Moist
A-1-a
12.0 Sa Gr
A-1-a Moist
12.0 Gr
A-1-a Moist
650
13.0 MOIST
644
20.0 Moist
NLTD
5.0 Moist
NLTD
35.0 Sa
A-2-a MOIST
NLTD
GUTTER
+0.062
-0.017
-0.021
-0.062
1-4
55.0 Moist
NLTD
50.0 Sa Moist
A-1-b
NLTD
Sa Gr A-1-b
50.0
Moist
A-1-b
E.H. 7150
MORRISTOWN
BRS 0238(2)
124+00 — 124+50
SHEET 72 of 85 Sheets

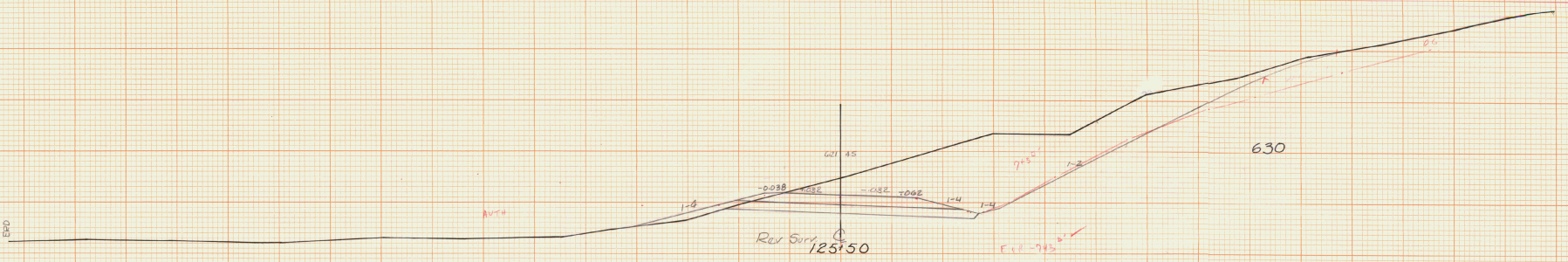

125+10 ~ 125+85
Cut to Fill Transition

PC 125+33.80
D = 6° Rt
Bank = .044 Ft/Ft

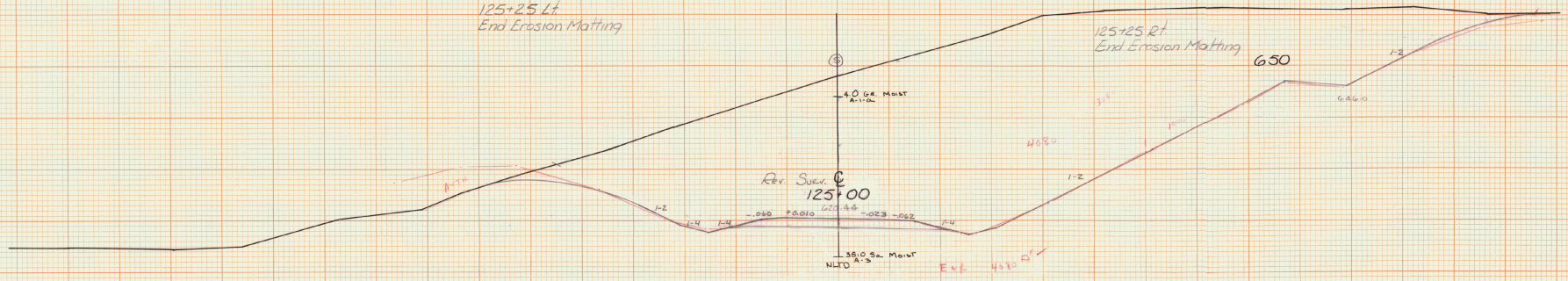

125+25 Lt
End Erosion Matting

125+25 Rt
End Erosion Matting

MORRISTOWN
BRS 0238(2)
125+00 – 125+50

Sheet 73 of 85 Sheets

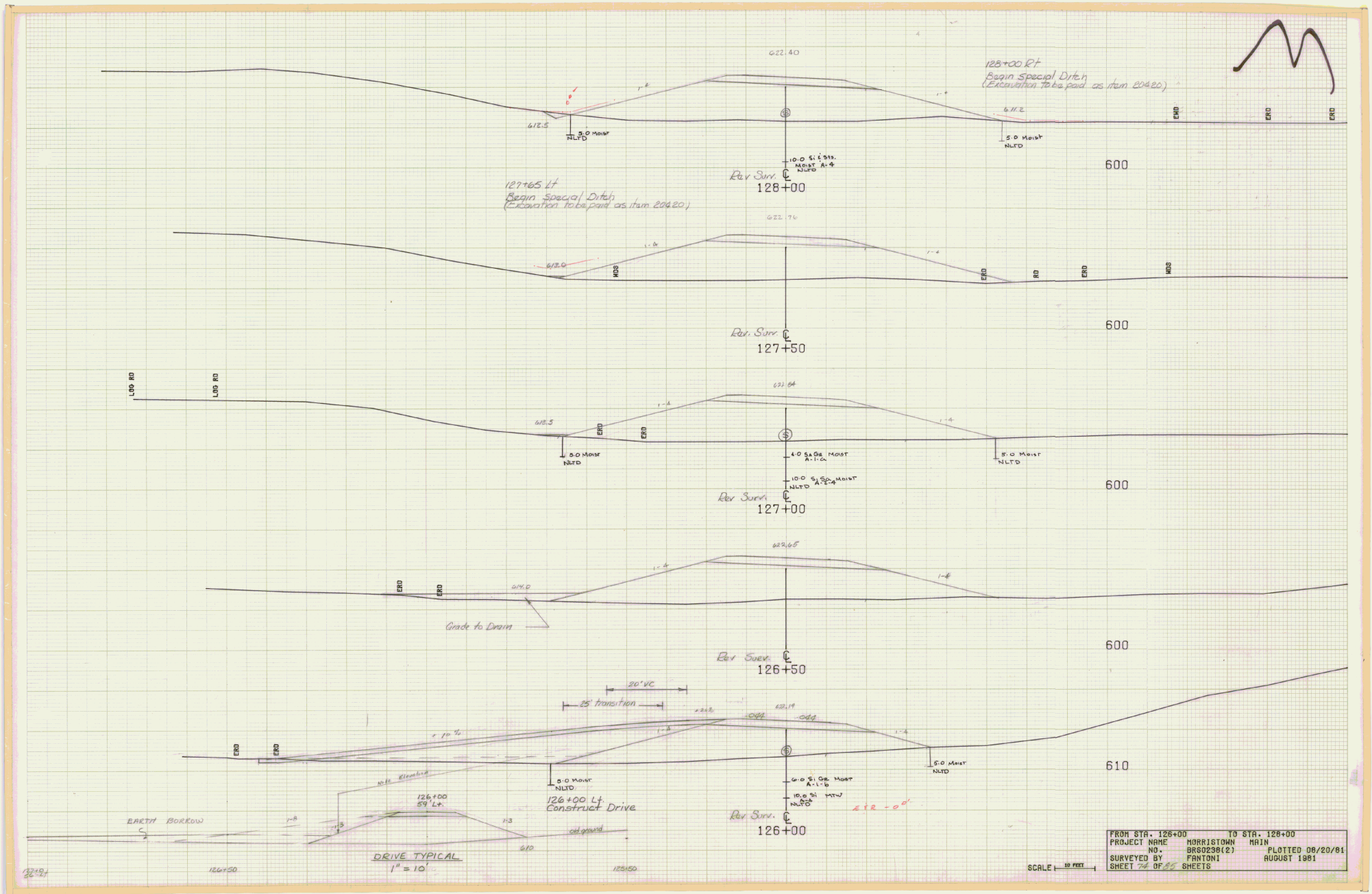

FROM STA. 126+00 TO STA. 128+00
PROJECT NAME MORRISTOWN MAIN
NO. BRS0238(2) PLOTTED 08/20/81
SURVEYED BY FANTONI AUGUST 1981
SHEET 74 OF 85 SHEETS

130+90 Rt
End Excavation & Removal of
Road Surfaces & Pavements

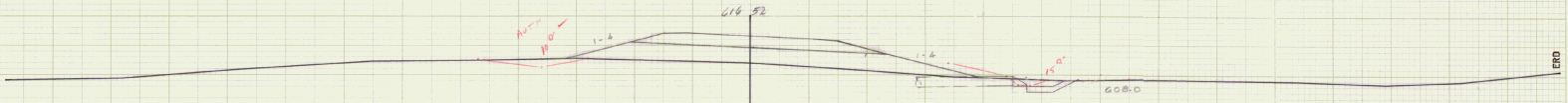

Rev. Surf. ℄
130+50

130+39 Rt
End Special Ditch
(Excavation paid as Item 209.20)
End Erosion Matting

600

130+50 Rt ~ 131+00 Lt
New 18" x 96' ACCOMP .064 W/MES .064
Stone Fill Type I @ inlet and Outlet

130+00 Lt
End Special Ditch
(Excavation paid as Item 209.20)

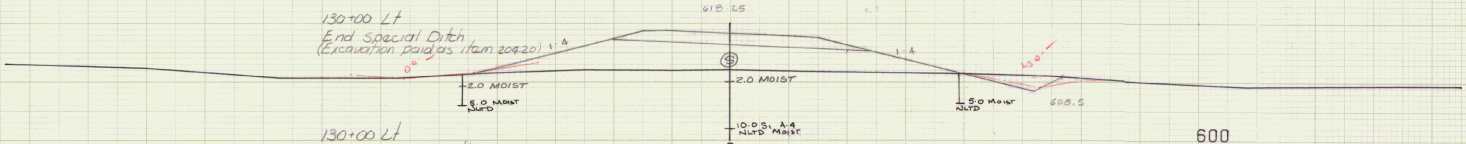

130+00 Lt
End Erosion Matting

Rev. Surf. ℄
130+00

600

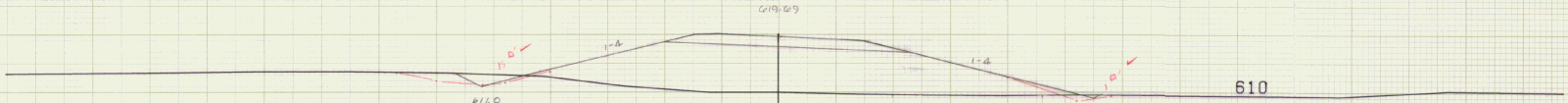

610

Rev. Surf. ℄
129+50

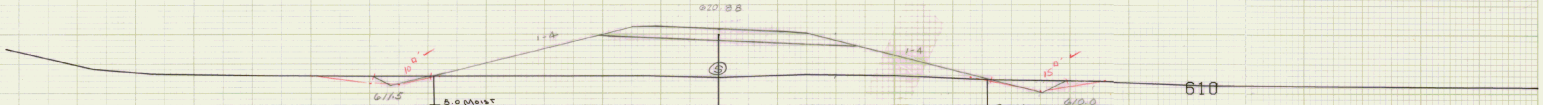

610

Rev. Surf. ℄
129+00

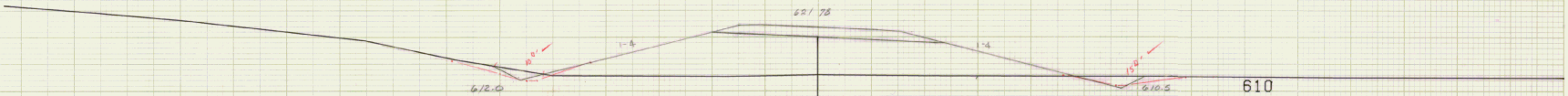

610

128+50 Lt
Begin Erosion Matting

128+50 Rt
Begin Erosion Matting

Rev. Surf. ℄
128+50

FROM STA. 128+50	TO STA. 130+50
PROJECT NAME	MORRISTOWN MAIN
NO.	BRS0238(2) PLOTTED 08/20/81
SURVEYED BY	FANTONI AUGUST 1981
SHEET 72 OF 85 SHEETS	

SCALE 10 FEET

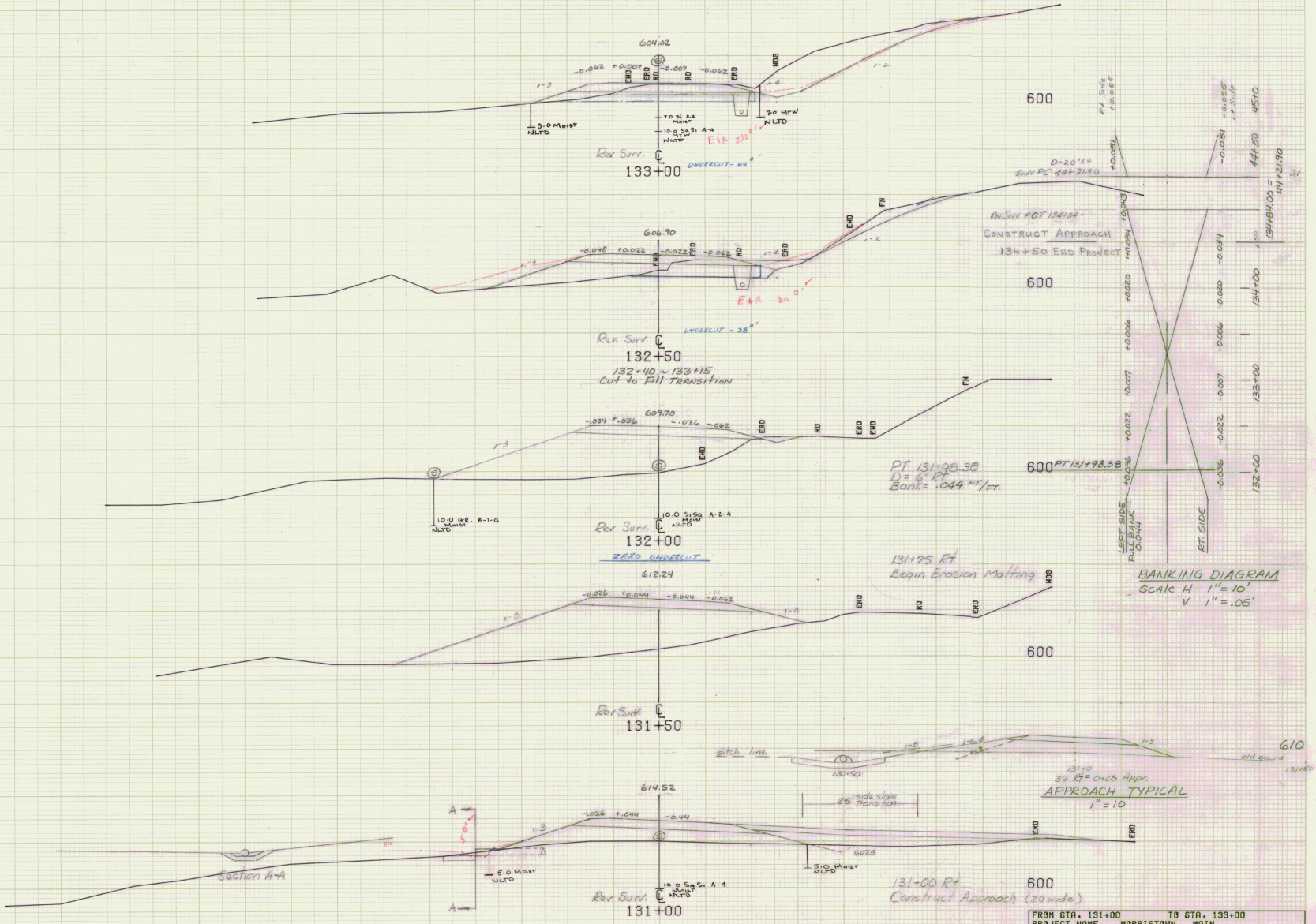
604.02
-0.062 +0.007
-0.007 -0.062
END
ERD
RD
ERD
HDS
1:3
1:4
1:2
5.0 Moist NLTD
7.0 Si & Moist NLTD
10.0 Sa Si: A-4 Moist NLTD
7.0 MTW NLTD
Rev Surf.
133+00
UNDERCUT - 64"
606.90
-0.048 +0.022
-0.022 -0.062
FN
606.90
Rev Surf.
132+50
UNDERCUT - 38"
132+40 ~ 133+15
Cut to Fill Transition
609.70
-.034 +.036
-.036 -.062
10.0 Gr. A-1-a Moist NLTD
10.0 Si Sa A-2-4 Moist NLTD
Rev Surf.
132+00
ZERO UNDERCUT
612.24
-0.026 +0.044
-0.044 -0.062
Rev Surf.
131+50
614.52
-.026 +.044
-0.44
5.0 Moist NLTD
10.0 Sa Si: A-4 Moist NLTD
607.6
15.0 Moist NLTD
Rev Surf.
131+00
Section A-A
600
PT 131+98.38
D = 6° Rt
Bank = .044 FT/FT.
PT 131+98.38
131+25 Rt
Begin Erosion Matting
Ref Surf
+0.055
+0.051
-0.051
-0.055
D-20°24'
SVRV PC 44+21.90
Rv Surv POT 134+34
CONSTRUCT APPROACH
134+50 END PROJECT
+0.043
+0.034
+0.020
+0.006
+0.007
+0.022
+0.036
-0.034
-0.020
-0.006
-0.007
-0.022
-0.036
LEFT SIDE
FULL BANK
0.044
RT. SIDE
4510
44+50
134+00
133+00
132+00
BANKING DIAGRAM
Scale H 1"=10'
V 1"=.05'
ditch line
1:3
1:6.4
1:2
130+50
610
old ground
131+40
39' Rt = 0+28 Appr.
APPROACH TYPICAL
1" = 10
25' 1:3 side slopes
25' Trans. Typ.
607.6
131+00 Rt
Construct Approach (20 wide)
600
SCALE 10 FEET
FROM STA. 131+00 TO STA. 133+00
PROJECT NAME MORRISTOWN MAIN
NO. BRS0238(2) PLOTTED 08/20/81
SURVEYED BY FANTONI AUGUST 1981
SHEET 76 OF 85 SHEETS

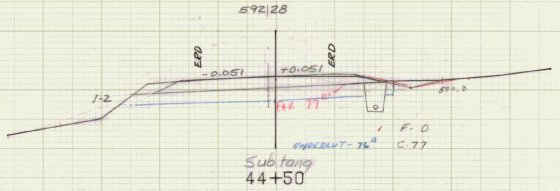

580

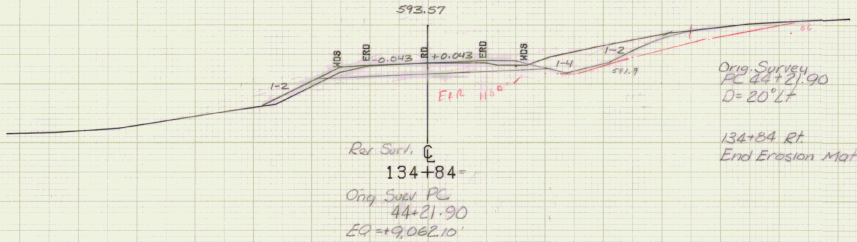

590

Orig Survey
PC 44+21.90
D = 20° Lt

134+84 Rt.
End Erosion Matting

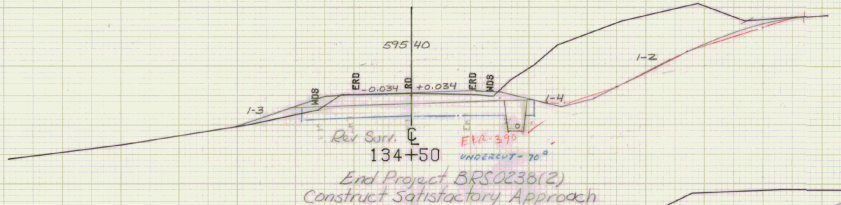

590

End Project BRS0238(2)
Construct Satisfactory Approach

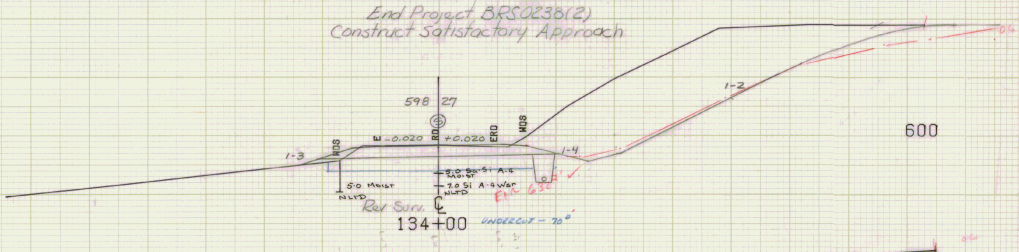

600

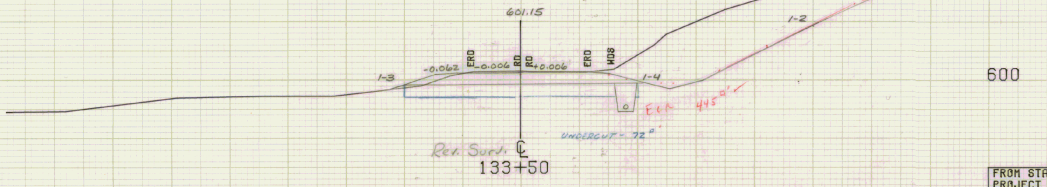

600

FROM STA. 133+50	TO STA. 44+50
PROJECT NAME	MORRISTOWN MAIN
NO.	BRS0238(2) PLOTTED 08/20/81
SURVEYED BY	FANTONI AUGUST 1981
SHEET 77 OF 85 SHEETS	

SCALE 10 FEET

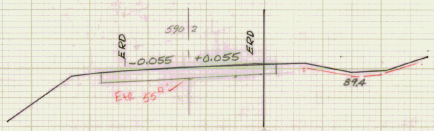

Sub fang.
45+30
ZERO UNDERCUT

Orig Survey
PT 45+99.40
D= 20°Lt.

590

FROM STA. 45+00		TO STA. 45+00	
PROJECT NAME	MORRISTOWN	MAIN	
NO.	BRS0238(2)	PLOTTED	08/20/81
SURVEYED BY	FANTONI	AUGUST	1981
SHEET 75 OF 85 SHEETS			

SCALE 10 FEET

FINAL EARTHWORK SHEET

STATE OF VERMONT
DEPARTMENT OF HIGHWAYS

STATION	DIST	TOTAL EXCAV. EARTH & ROCK AREA	TOTAL EXCAV. EARTH & ROCK CU. YDS.	ROCK AREA	ROCK CU. YDS.	TRENCH EARTH AREA	TRENCH EARTH CU. YDS.	TRENCH RT AREA	TRENCH RT CU. YDS.	SAND BORROW AREA	SAND BORROW CU. YDS.	CUT TO FILL AREA	CUT TO FILL CU. YDS.	AREA	CU. YDS.
116+50		38													
	50		100.0												
117+00		70		0											
	20		73.3		27.8										
+20		120		26											
	10		67.6		47.2										
+30		239		183											
	10		106.9		86.1										
+40		348		286											
	10		127.8		111.1										
+50		350		315											
	8		105.8		94.8										
+58		360		825											
	67		813		768										
Bdt +667		296		395											
				TOTAL	443.9										
122+00		0													
	50														
+50															
	50														
123+00		372													
	34		678.8		500.2										
+50		675													
	15														
+50		749													
124+00															
+50		603													
125+00		408													
		293													
+50															
126+00		0													
125+00				0		0									
	50			10	9.3	15	13.9								
+50				18	18.5	15	27.8								
127+00				18	23.1	15	14.8								
	50			15	13.1	11	24.1								
+50				0		23									
128+00				10	9.2	15	37.0								
	50			10	13.7	18									
+50				5											
129+00				8											
				TOTAL	88.6		117.6								
130+00		0								0					
	50		27.8							38	35.2				
+50		3								38	94.4				
131+00		50	241.6							24					
	50		626.9								185.9				
+50		445								72					
132+00		50	997.2							7	131.2				
		650													
+50		50	976.3							2	121.5				
133+00		39													
		390	374.8												
+87		110									167.1				
= 1+74.24															
	26.1		973		534										
+25		27								76	70.5				
	50		122.8												
+45+04		85								0					
BUTT															
								TOTAL SAND BORROW = 734.2							
										9-4 BY DWH					

CARRIED FORWARD
COLUMN TOTAL

STATION	DIST	TOTAL EXCAV. EARTH & ROCK AREA	TOTAL EXCAV. EARTH & ROCK CU. YDS.	ROCK AREA	ROCK CU. YDS.	AREA	CU. YDS.	AREA	CU. YDS.	AREA	CU. YDS.	AREA	CU. YDS.	AREA	CU. YDS.

MORRISTOWN BRS 0238(2)
GODFREY ROCK BORROW PIT
(SECTIONS)

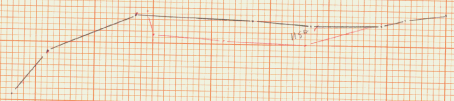

1+60 (100' RT.)

DITT @ 1+60

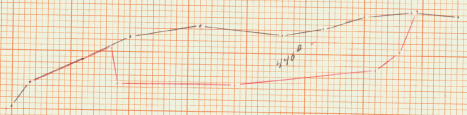

1+40 (100' RT.)

QUANTITIES COMPUTED BOOK #1 PAGE # 178

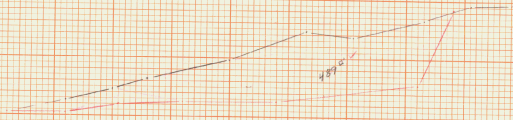

1+20 (100' RT.)

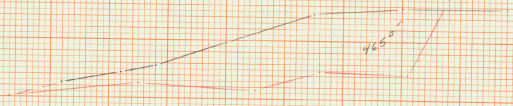

1+00 (100' RT.)

PLOTTED 6-20-84 DWH

80

0+80

PLATE 3, CROSS SECTION
KEUFFEL & ESSER CO

ROCK BARROW P.I SH. #1/1

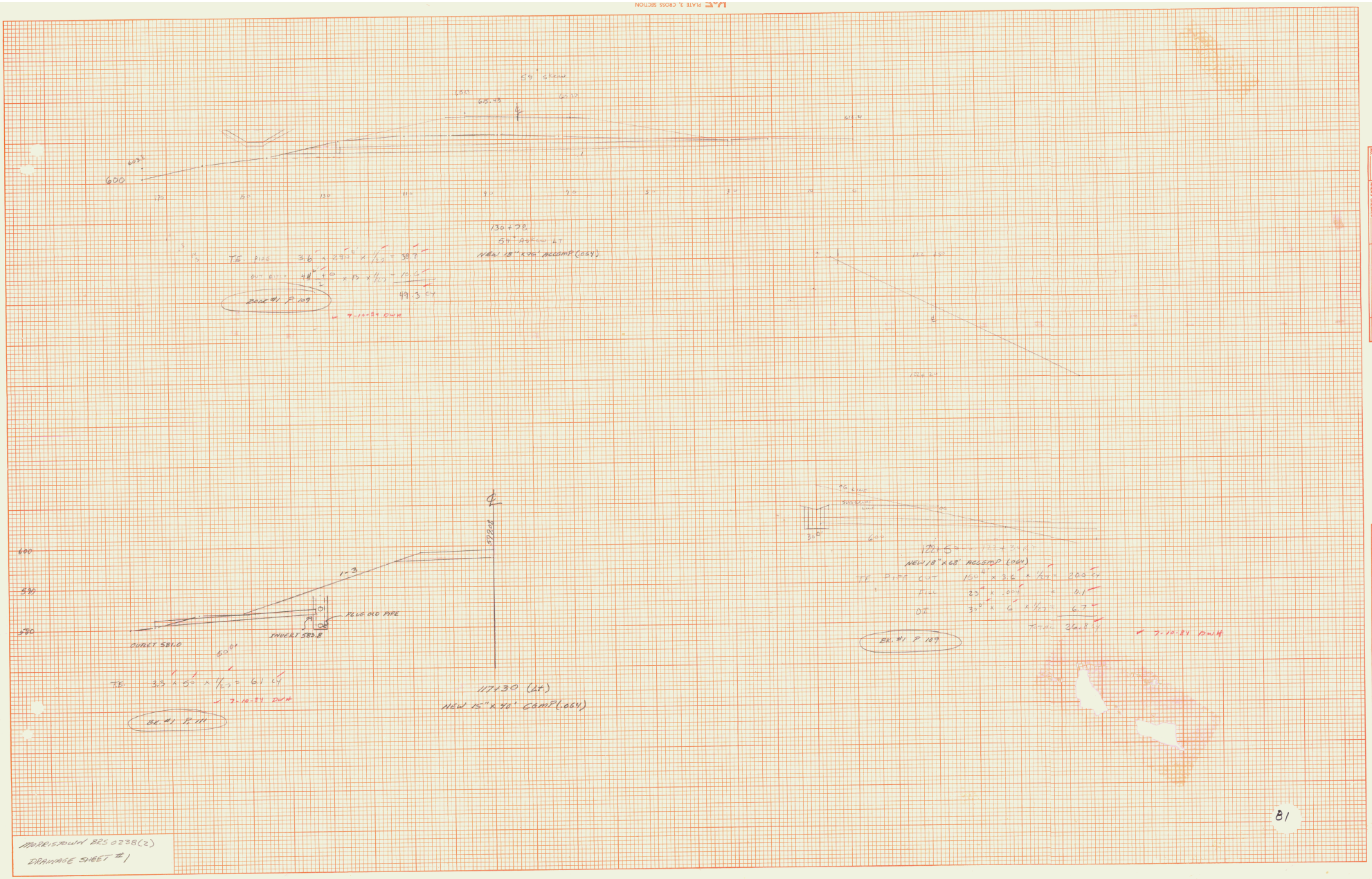

ORIGINAL SURVEY NOTE BOOK NO. SURVEYED PLOTTED TEMPLATE AREAS AREAS CHECKED BY DATE

FINAL SURVEY NOTE BOOK NO. SURVEYED PLOTTED TEMPLATE AREAS AREAS CHECKED BY DATE

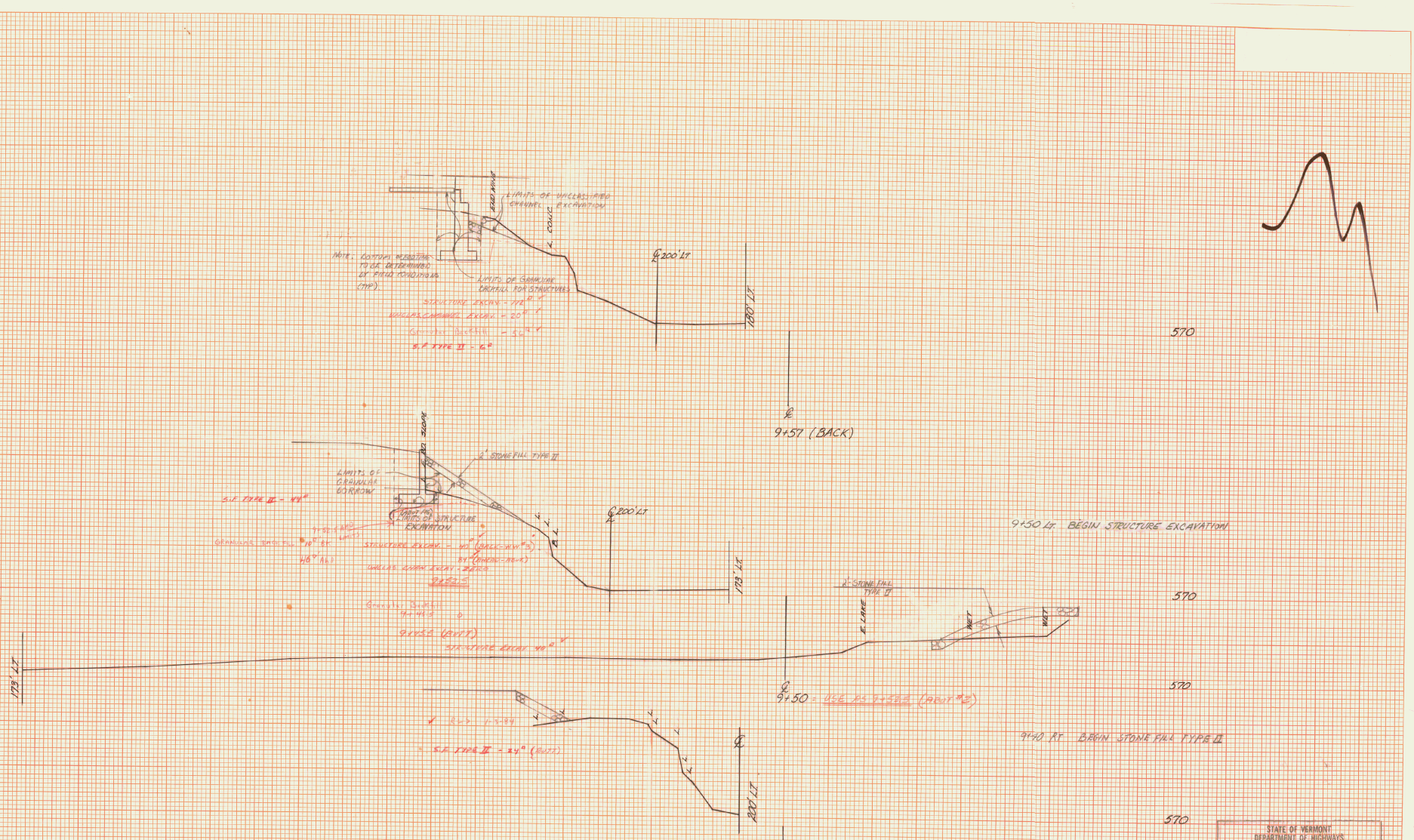

STATE OF VERMONT
DEPARTMENT OF HIGHWAYS

TOWN OF MORRISTOWN

Levels by SARGENT 1944 2/80

Plotted by P.R.H. Ck'd by MMG

SCALE: 1 INCH = 10 FEET

Proj. No. BRS 0238(2) Sheet 27 of 27

Sta. 9+38 to Sta. 9+57 (BACK)

B2

PLATE 3 CROSS SECTION C. P. M. & R. E. STANDARD
DIETZGEN CORPORATION

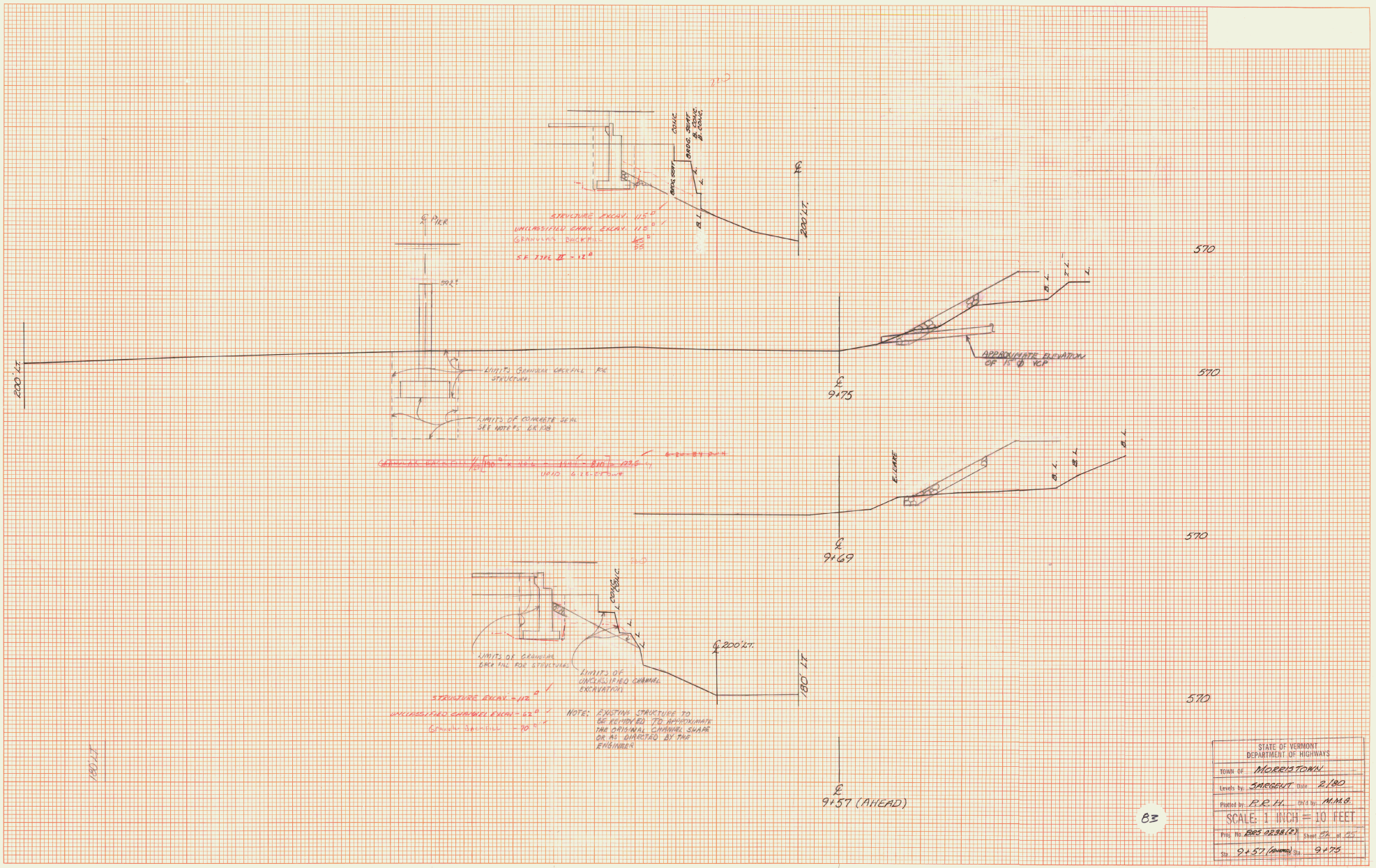

FINAL SURVEY
SURVEYED
PLOTTED
TEMPLATE
NOTE BOOK
MEAS CHECKED
NO.
BY
DATE

ORIGINAL SURVEY
SURVEYED
PLOTTED
TEMPLATE
NOTE BOOK
MEAS CHECKED
NO.
BY
DATE

STATE OF VERMONT
DEPARTMENT OF HIGHWAYS
TOWN OF MORRISTOWN
Levels by: SARGENT Date: 2/80
Plotted by: P.R.H. Ck'd by: M.M.B.
SCALE: 1 INCH = 10 FEET
Proj. No. BRS 0238(2) Sheet 7A of 25
Sta. 9+57 (AHEAD) Sta. 9+75

PLATE 3 CROSS SECTION C. P. & R. E. STANDARD
DIETZGEN CORPORATION

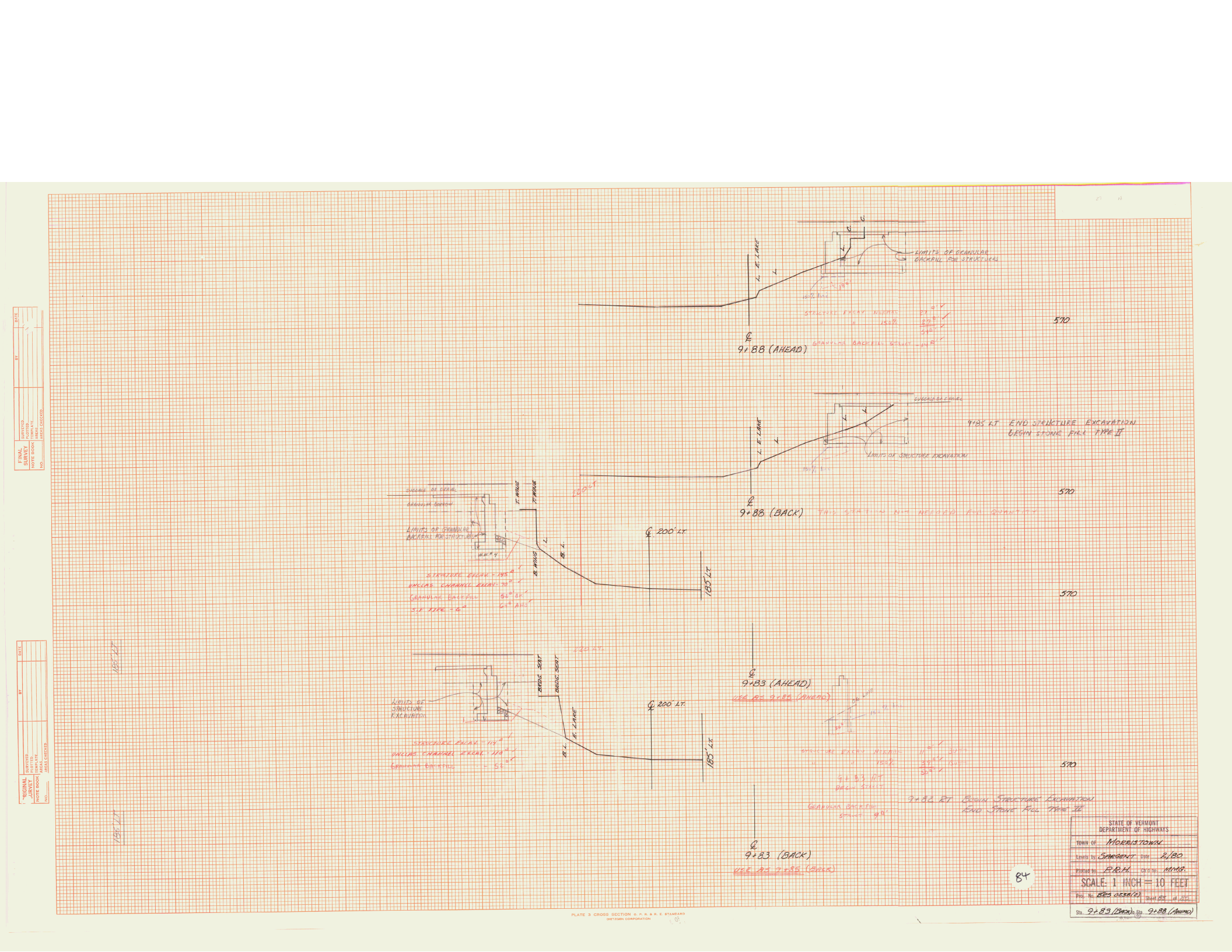
℄ 9+88 (AHEAD)
℄ E. LANE
LIMITS OF GRANULAR BACKFILL FOR STRUCTURES
570
9+85 LT. END STRUCTURE EXCAVATION
BEGIN STONE FILL TYPE II
℄ 9+88 (BACK)
THIS STATION NOT NEEDED FOR QUANTITY
℄ 200' LT.
185' LT.
℄ 9+83 (AHEAD)
USE AS 9+88 (AHEAD)
℄ 9+83 (BACK)
USE AS 9+85 (BACK)
9+82 RT. BEGIN STRUCTURE EXCAVATION
END STONE FILL TYPE II
84
STATE OF VERMONT
DEPARTMENT OF HIGHWAYS
TOWN OF MORRISTOWN
SCALE: 1 INCH = 10 FEET
Sta. 9+89 (BACK) to Sta. 9+88 (AHEAD)

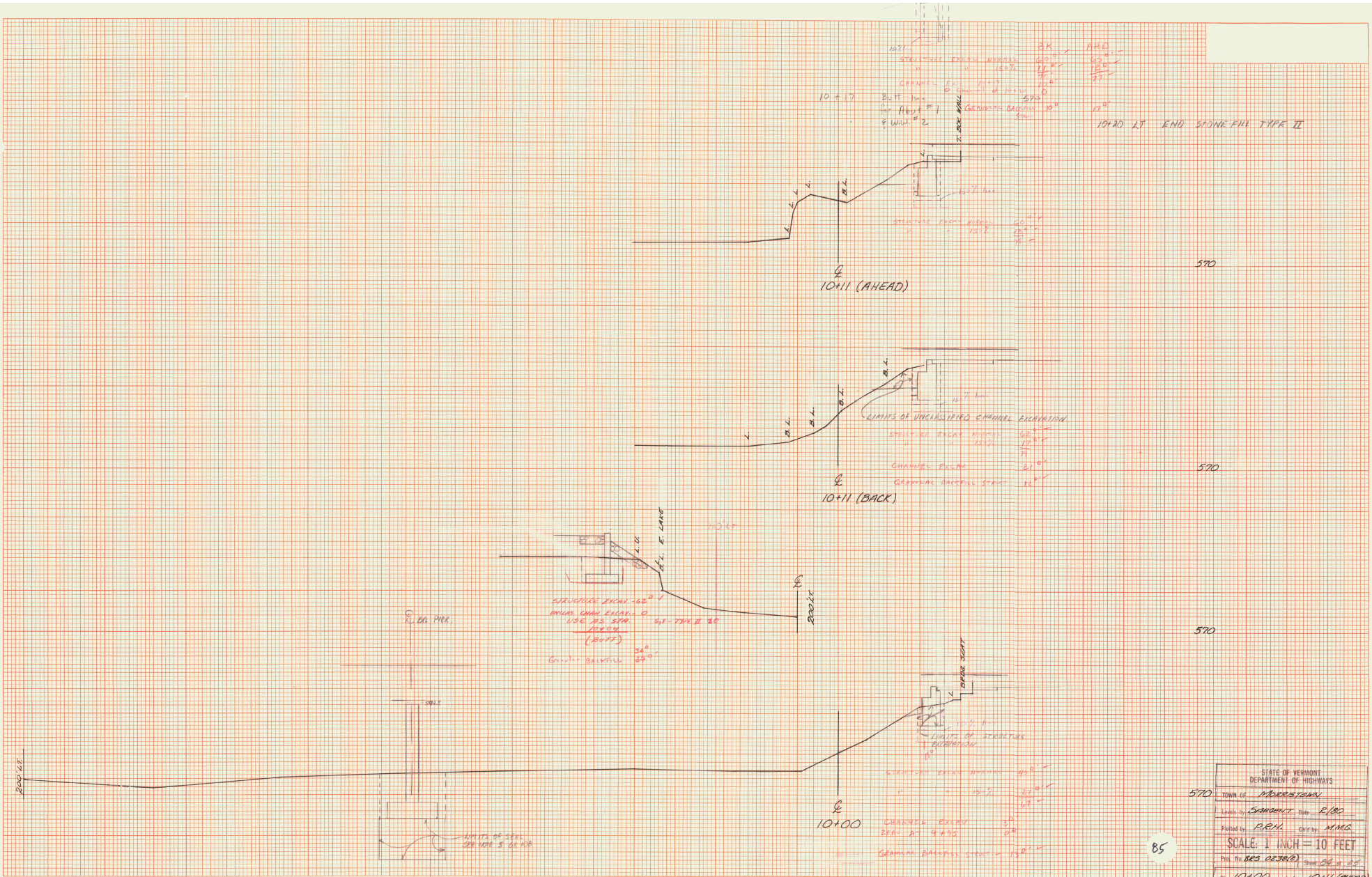

STATE OF VERMONT
DEPARTMENT OF HIGHWAYS

TOWN OF MORRISTOWN

Levels by SARGENT Date 2/80

Plotted by P.R.H. Ck'd by M.M.G.

SCALE: 1 INCH = 10 FEET

Proj. No. BRS 0238(2) Sheet 24 of 25

Sta. 10+00 to Sta. 10+11 (AHEAD)

85

PLATE 3 CROSS SECTION C. P. H. & R. E. STANDARD
DETZSEN CORPORATION

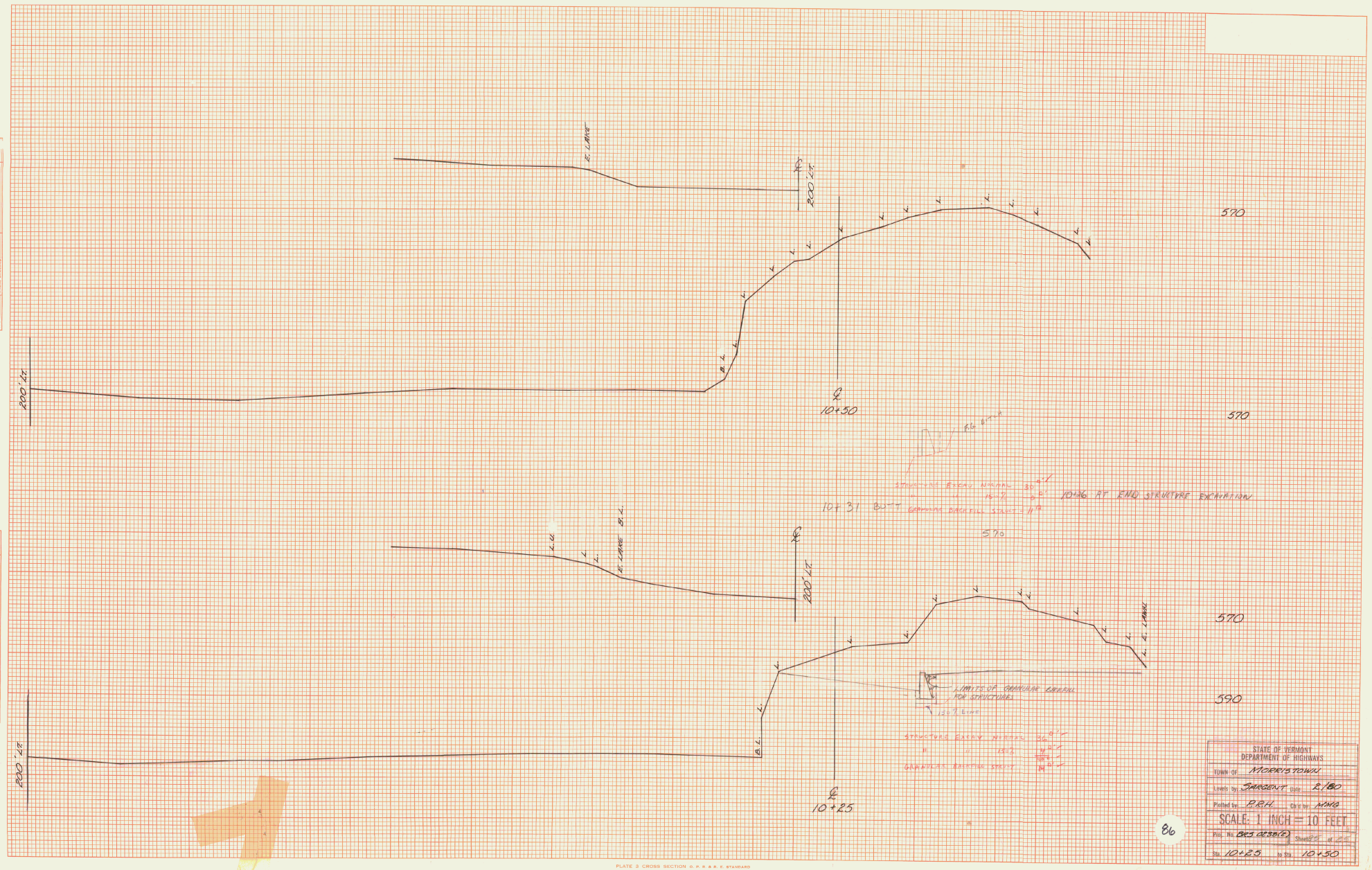

FINAL SURVEY NOTE BOOK NO. SURVEYED PLOTTED TEMPLATE AREAS AREAS CHECKED BY DATE

ORIGINAL SURVEY NOTE BOOK NO. SURVEYED PLOTTED TEMPLATE AREAS AREAS CHECKED BY DATE

PLATE 3 CROSS SECTION D. P. R. & R. E. STANDARD
DIETZGEN CORPORATION

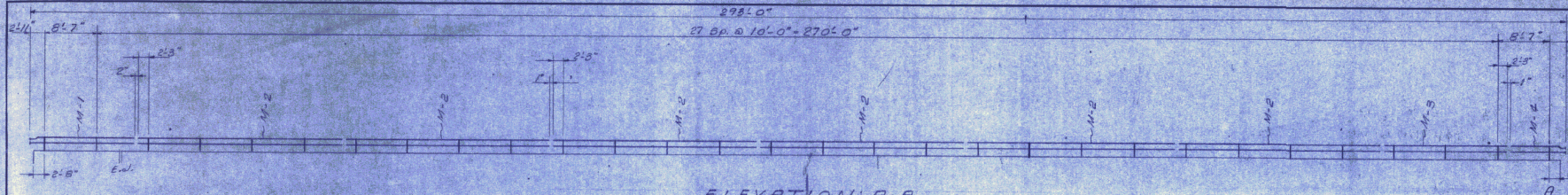

ELEVATION A-A

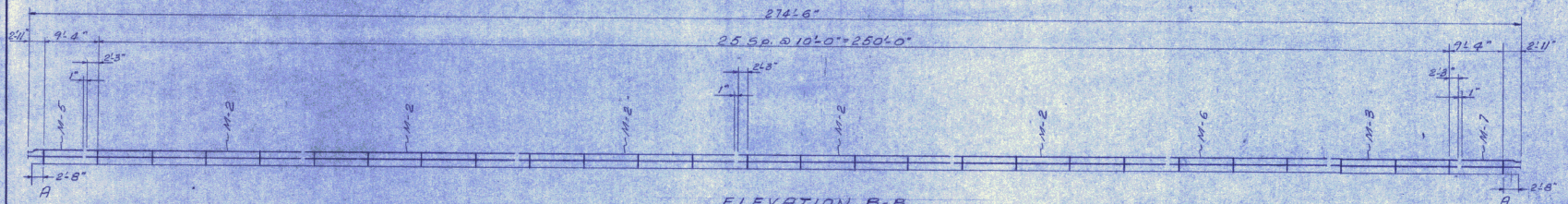

ELEVATION B-B

BILL OF MATERIAL	
ABR-586	BR-586
58	6"x6"x5/16" Tube x 2'-2" lg.
58	PL 1"x9"x1'-1"
58	PL 5/16"x5 3/8"x5 3/8"
116	PL 3/8"x5"x5"
116	5/8"φ x 4 1/2" Hex. Hd. Bolt, 1-nut & 2-ea. wash.
32	Splice Assemblies w/ 3/4"φ x 4" Bolts
58	Anchor Bolt Assemblies
2	6"x3"x1/4" Tube x 19'-7" lg. (M-1)
22	" x 40'-0" lg. (M-2)
2	" x 25'-0" lg. (M-3)
2	" x 10'-0" lg. (M-4)
2	" x 10'-6" lg. (M-5)
2	" x 30'-0" lg. (M-6)
2	" x 11'-0" lg. (M-7)
6	1/8"x5"x5" Fabric Pad

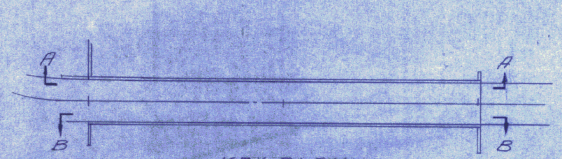

KEY PLAN

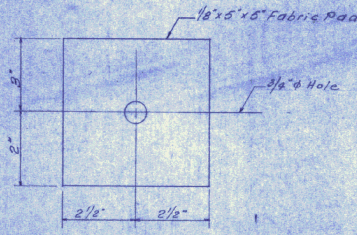

PAD DETAIL

At Shelf Bracket under Rail, Post A only, See Elev. A-A & B-B
6-Req'd

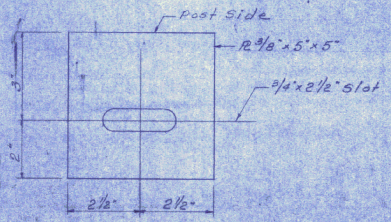

SHELF BRACKET

Post "A" only
6-Req'd

OCT 9 1984

RECEIVED
CK'D BY _____ OK'D BY _____
RESUBMIT _____ APPROVED _____
BY [signature] DATE 10/10/84

87

Project BRS 0288(2)

ISSUE	DATE	DESCRIPTION	BY
3	5/16/84	Rev. per Engineer	D.
2	3/29/84	Rev. per Engineer	D.
1	1/24/84	For approval	D.

AMERICAN BRIDGE RAILING CORP.
93-95 BROOKLINE ST.
LYNN, MASS. 01902

State of Vermont
Agency of Transportation
Morristown
TH 3 over Lake Lamoille
Bridge No. 89
Bridge Railing Details
Customer - Beck & Bellucci, Inc.

DR: H.R. SCALE: ~
CH: B.M. ASR: 586

BR-586

Sh. 1

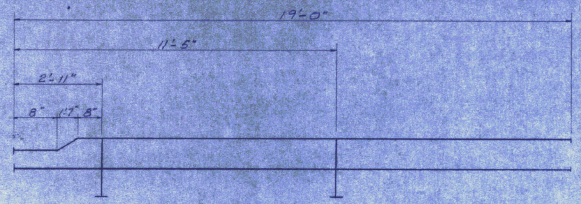

M-1
1-Req'd

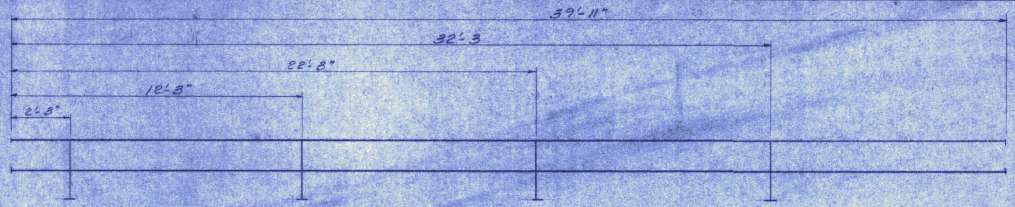

M-2
11-Req'd

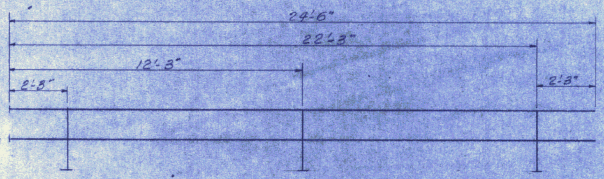

M-3
1-Req'd

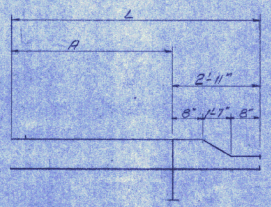

MK	Quan.	A	L
M-4	1	6'-3"	9'-2"
M-7	1	7'-0"	9'-11"

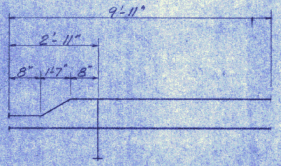

M-5
1-Req'd

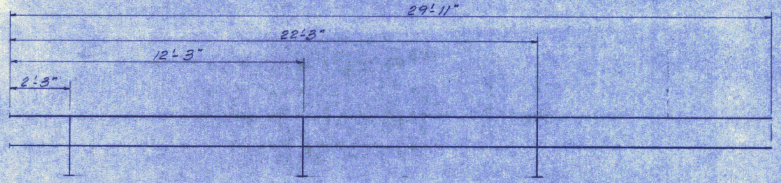

M-6
1-Req'd

RECEIVED OCT 9 1984
CK'D BY
RESUBMIT
BY
OK'D BY
APPROVED
DATE
Alfred H. Couch 10/10/84

1. All Tubing shall be 6" x 3" x 1/4" Wall.
2. Posts shown for ℄ location of 3/4" ϕ Hole in Tubing.
3. Tubes shall be drilled in field.

Project BRS 0238(2)

ISSUE	DATE	DESCRIPTION	BY
2	3/29/84	Rev per Engineer	D.
1	1/30/84	For approval	D.

AMERICAN BRIDGE RAILING CORP.
93-95 BROOKLINE ST.
LYNN, MASS. 01902

State of Vermont
Agency of Transportation
Morristown
TH3 over Lake Lamoille
Bridge No. 89
Bridge Railing Details

Customer: Beck & Bellucci, Inc.

DR: H.R. SCALE: ~ BR-586
CH: B.M. ABR: -586

sh. 2

88

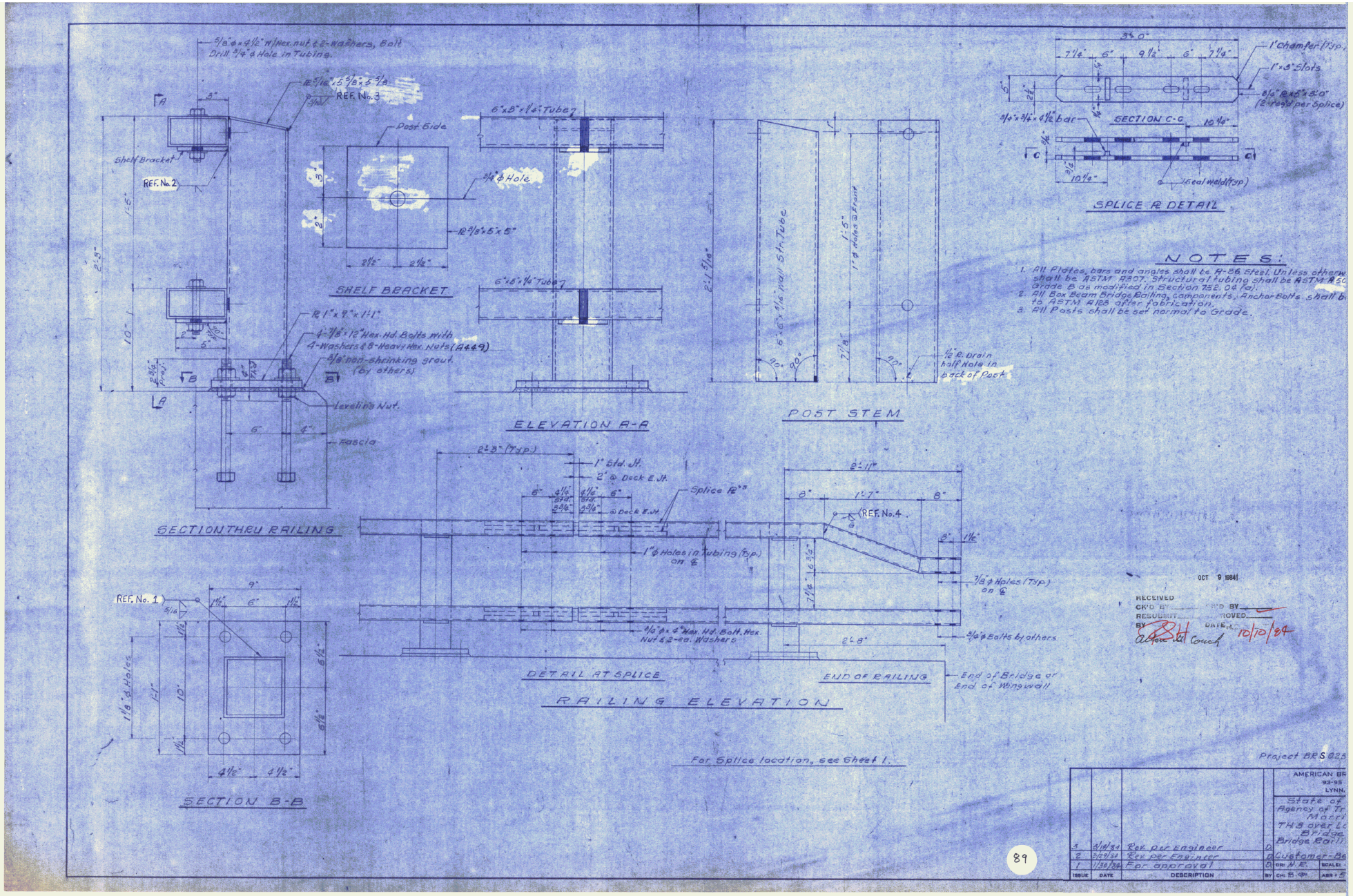
5/8"ø x 4½" w/Hex. nut & 2-Washers, Bolt
Drill 3/4" ø Hole in Tubing.
REF. No. 3
Post Side
Shelf Bracket
REF. No. 2
3/4" ø Hole
SHELF BRACKET
6"x8"x1/4" Tube
R 1"x 9"x 1'-1"
4-7/8"x 12" Hex. Hd. Bolts with 4-Washers & 8-Heavy Hex. Nuts (A449)
5/8" non-shrinking grout (by others)
Leveling Nut
Fascia
SECTION THRU RAILING
ELEVATION A-A
POST STEM
6"x6"x 5/16" wall Str. Tube
1" ø Holes @ Front
1/2" ø Drain half Hole in back of Post
SPLICE R DETAIL
1" Chamfer (Typ.)
1"x 3" Slots
3/4"x 3/4"x 4½" bar
(6 eal weld (Typ.)
NOTES:
1. All Plates, bars and angles shall be A-36 Steel. Unless otherw shall be ASTM A307. Structural tubing shall be ASTM A50 Grade B as modified in Section 732.08 (a).
2. All Box Beam Bridge Railing components, Anchor Bolts shall b to ASTM A153 after fabrication.
3. All Posts shall be set normal to Grade.
2'-3" (Typ.)
1" Std. Jt.
2" @ Deck E. Jt.
@ Deck E. Jt.
Splice R"B
1" ø Holes in Tubing (Typ.) on ℄
REF. No. 4
3/8" ø Holes (Typ.) on ℄
4½" ø x 4" Hex. Hd. Bolt, Hex. Nut & 2-ea. Washers
5/8" ø Bolts by others
DETAIL AT SPLICE
END OF RAILING
End of Bridge or End of Wingwall
RAILING ELEVATION
REF. No. 1
1⅛" ø Holes
SECTION B-B
For Splice location, see Sheet 1.
RECEIVED
CK'D BY
RESUBMIT
APPROVED
BY
DATE
10/10/84
OCT 9 1984
Project BRS 023
AMERICAN BR
93-95
LYNN,
State of
Agency of Tr
Morri
TH 3 over Lo
Bridge
Bridge Rail)
3 8/14/84 Rev per Engineer
2 5/29/84 Rev per Engineer
1 1/30/84 For approval
ISSUE DATE DESCRIPTION BY
Customer-Be
Dr. N.E.
SCALE:
Ch.
Apr.
ASB
89

FIELD BOLTS	JOB NO.	DRAWING NO.	REV.
	3-16	62-1	△

SPECIFICATION: $\frac{7}{8}\phi$ H.S. BOLTS - A325 TYPE 3

CONNECTING	LENGTHS 2"	2½	2¾	3½	4½
WEB PL FIELD SPLICE				864	
FLG PL FIELD SPLICE					512
END DIAPHRAGM			168		
PIER CROSSFRAME			144		
INT. CROSSFRAME		1320			
FLEM. BRKT HOLES	280				

STK T
MODULUS
P.O. 31396

LENGTHS	2"	2½	2¾	3½	4½
SUB TOTAL	280	1320	312	864	512
+ 2%	5	30	8	16	13
TOTAL =	285	1350	320	880	525

WASHERS	PLAIN	CLIPPED	BEVELED
	3360		
TOTAL WEIGHT			

PROJ. Nº BRS 0238(2)

APPROVED: 10-27-83

PRINT DIST.		
6	10/11/83	APP.
8	10-28-83	FAB.
		F&F.

89a

REV. △

CHECKED 10-3-83 GK
DRAWN 9-28-83 ELC

FIELD BOLTS

Bancroft & Martin Inc.
South Portland, Maine 04106

JOB: VERMONT RTE TH3 OVER LAKE LAMOILLE
MORRISTOWN, VERMONT

CUSTOMER: BECK / BELLUCI

DESIGNER: STATE OF VERMONT - AGENCY OF TRANS.

ORDER NO.	JOB NO.	DRAWING NO.	REV.
	3-16	62-1	△

900-24

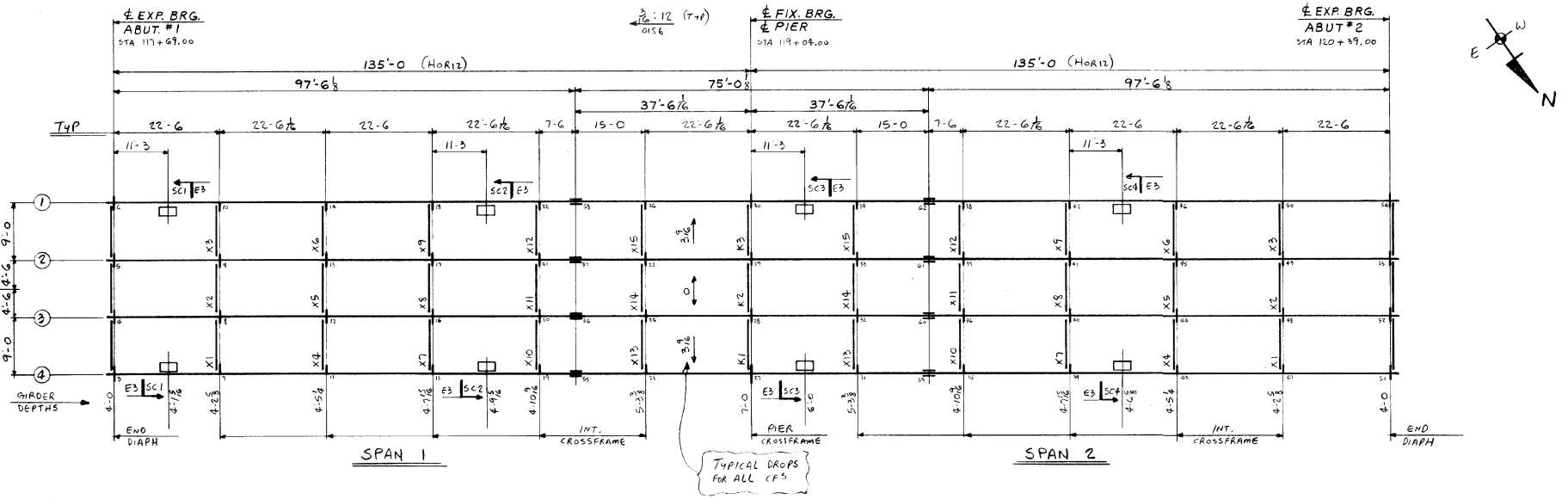

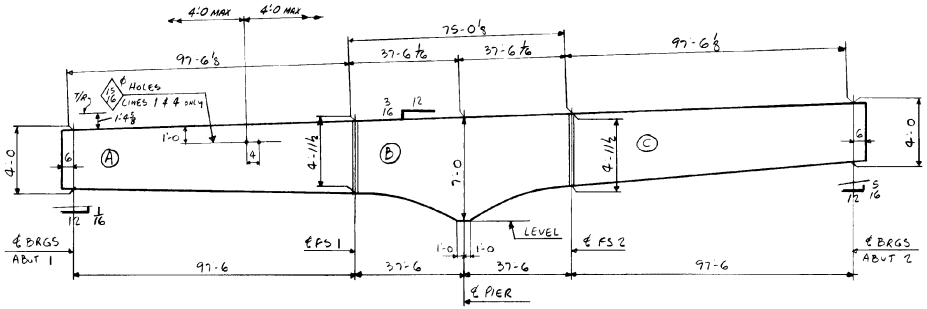

TYP. GIRDER ELEVATION

NOTES:

1) ALL LONG. DIMS. ARE SLOPING ALONG TOP OF WEB ℄.
2) ALL TRANSV. DIMS ARE HORIZ.
3) ENDS & END BRGS ARE VERTICAL.
4) INT. CF & PIER BRG & FS. ARE VERTICAL.
5) → DENOTES DROP. ARROW POINTS TO LOW END.
6) FOR LAYOUTS SEE SHT. E-3.
7) SAMPLE JOB 874.

IT. NO. 506.91	BR. NO. B-9	PROJ. NO. BRS 0238(2)	
FOR APPROVAL	**FOR FILES & FIELD**		
FRAMING PLAN			
APPROVED: 10-27-83	Bancroft & Martin Inc.		
PRINT DIST.	South Portland, Maine 04106		
6 9-19-83 APP.			
8 10-28-83 F&B.			
F&F	JOB: VERMONT RTE. TH3 OVER LAKE LAMOILLE MORRISTOWN, VERMONT		
6 10-11-83 APP			
	CUSTOMER: BECK/BELLUCI		
	DESIGNER: STATE OF VERMONT - AGENCY OF TRANS.		
REV. △	ORDER NO.	JOB NO.	DRAWING NO. / REV.
CHECKED 9-15-83 FK		3-16	W1 △
DRAWN 9-9-83 LT			

90

PTS 1-62

900-01

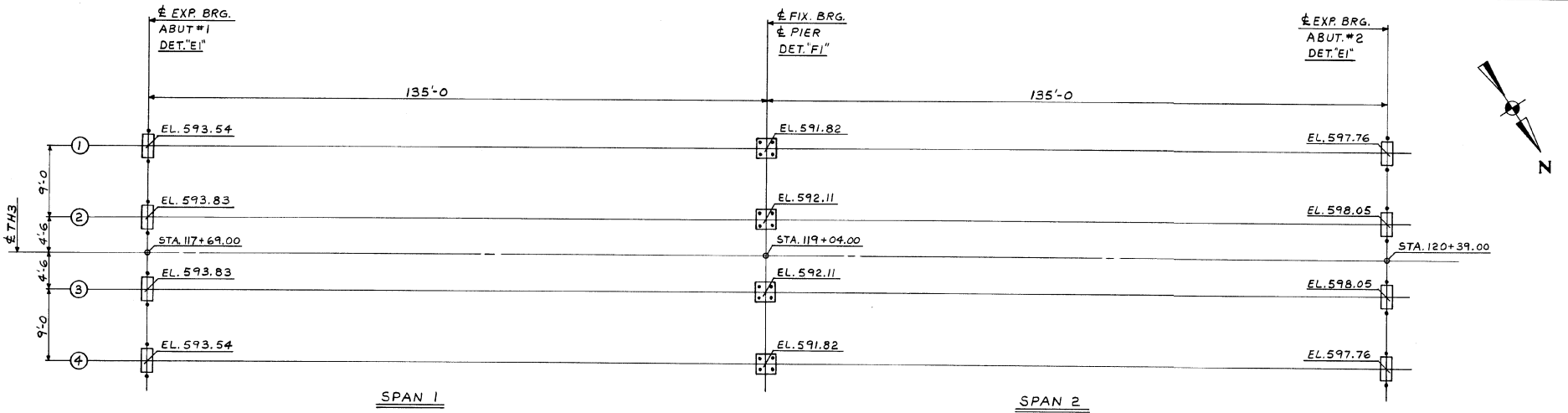

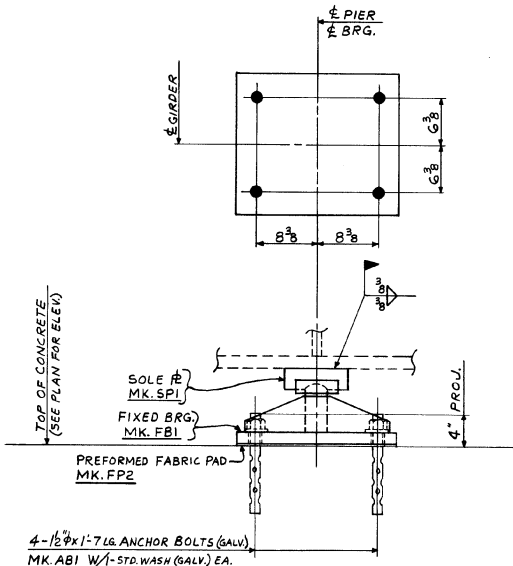

DETAIL "F1"
(FIXED BRG.) @ PIER

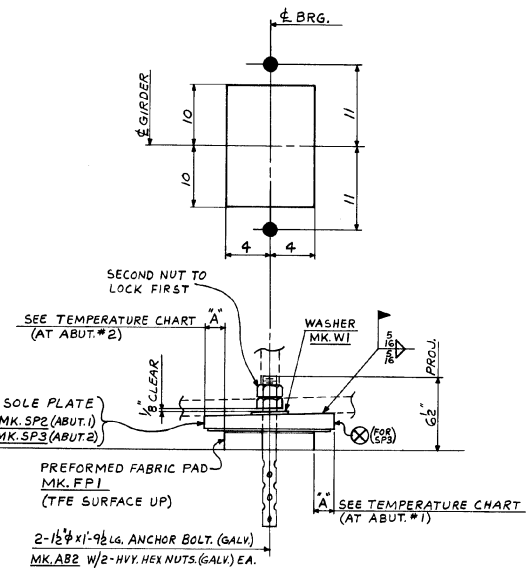

DETAIL "E1"
(EXPANSION BRG.) @ ABUTMENTS
LOOKING SOUTH

TEMPERATURE CHART	
TEMPERATURE °F	DIM. "A" (SEE DET. "E1")
30°	1 11/16
45°	1 9/16
60°	1 3/8
75°	1 1/4

NOTES:

1. ALL DIMENSIONS ARE TAKEN IN A HORIZONTAL PLANE.
2. ALL DIMENSIONS MUST BE STRICTLY ADHERED TO; OTHERWISE STEEL WILL NOT FIT. IN CASE OF ERROR, NOTIFY BANCROFT & MARTIN INC. AT ONCE.
3. ANCHOR BOLTS ARE FURNISHED BY BANCROFT & MARTIN INC. AND SET BY OTHERS.
4. SOLE PLATES TO BE POSITIONED AND WELDED IN FIELD. SEE TEMP. CHART FOR POSITIONING OF EXP. BRG. FAB. PAD.
5. THICKER EDGE OF SOLE PLATE IS MARKED ⊗.

IT. NO. 506.99	BR. NO. B-9	PROJ. NO. BRS 0238(2)	
FOR APPROVAL	FOR FILES & FIELD		
ANCHOR BOLT PLAN			
APPROVED: 10-27-83	Bancroft & Martin Inc.		
PRINT DIST.	South Portland, Maine 04106		
6 10/11/83 APP.			
8 10-28-83 FAB.			
F&F.	JOB: VERMONT RTE. TH3 OVER LAKE LAMOILLE MORRISTOWN, VERMONT		
	CUSTOMER: BECK/BELLUCI		
	DESIGNER: STATE OF VERMONT - AGENCY OF TRANS.		
REV. △	ORDER NO.	JOB NO.	DRAWING NO. / REV.
CHECKED 10-3-83 GK		3-16	E-1 △
DRAWN 9-8-83 RLA			

900-03

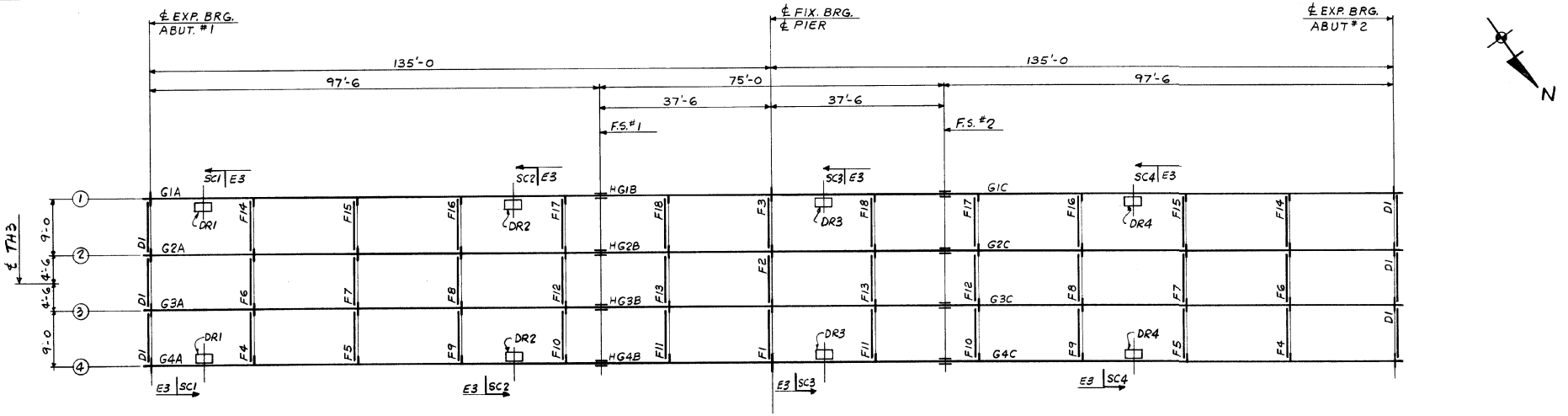

IT. NO. 506.91	BR. NO. B-9	PROJ. NO. BRS 0238(2)
FOR APPROVAL	**FOR FILES & FIELD**	

FRAMING PLAN

	PRINT DIST.	
APPROVED: 10-27-83		
6	10/11/83	APP.
8	10-28-83	FAB.
		F&F.
REV. △		
CHECKED	10-3-83	GK
DRAWN	9-7-83	RLA

Bancroft & Martin Inc.
South Portland, Maine 04106

JOB: VERMONT RTE. TH3 OVER LAKE LAMOILLE MORRISTOWN, VERMONT

CUSTOMER: BECK/BELLUCI

DESIGNER: STATE OF VERMONT - AGENCY OF TRANS.

ORDER NO.	JOB NO.	DRAWING NO.	REV.
	3-16	E-2	△

92

900-02

HARLAN F. SPELLER CO. INC.

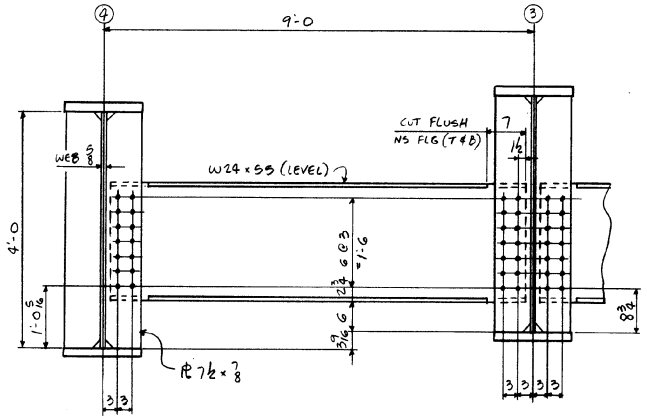

END DIAPH @ ABUTS ~ MK. D1

LOOKING EAST @ ABUT 1

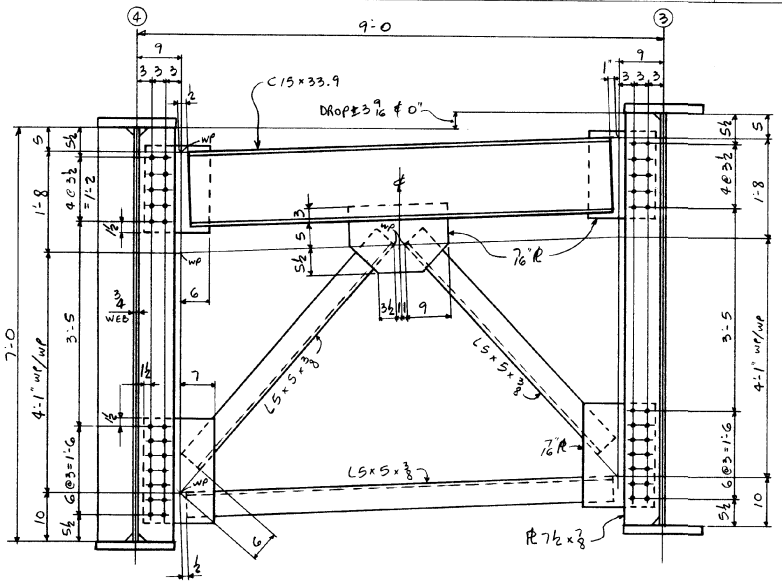

PIER CROSSFRAME (LOOKING EAST) ~ MKS. F1, F2 & F3

K1, K2, K3 (TYPE 2)

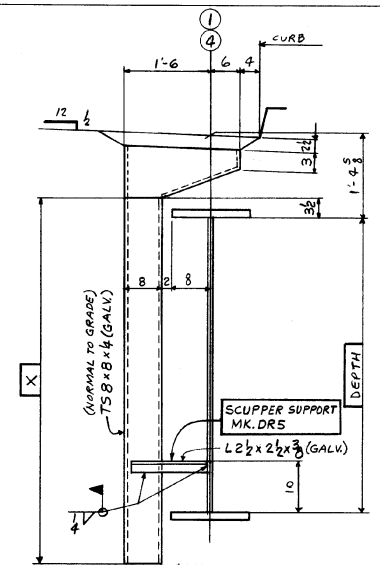

SCUPPER SECTION

SECT	DEPTH	X	MARK
SC1	4'-1 5/16	5'-5	DR1
SC2	4'-9 5/16	6'-1	DR2
SC3	6'-0"	7'-4	DR3
SC4	4'-6 5/8	5'-11	DR4

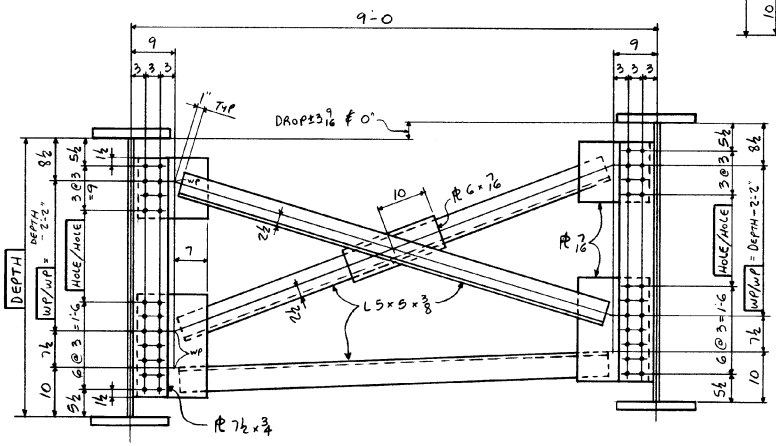

INTERMEDIATE CROSSFRAME ~ MKS. F4 THRU F18

LOOKING EAST

CALC. Nº	DEPTH	WP/WP (0'-2")	HOLE/HOLE (0'-3")
X1, X2, X3	4'-2 5/8	2'-0 5/8	1'-0 5/8
X4, X5, X6	4'-5¼	2'-3¼	1'-3¼
X7, X8, X9	4'-7 15/16	2'-5 15/16	1'-5 15/16
X10, X11, X12	4'-10 9/16	2'-8 9/16	1'-8 9/16
X13, X14, X15	5'-3 3/8	3'-1 3/8	2'-1 3/8

ERECTOR NOTE

FOLLOW PL MK LOCATION AND DROP DIRECTION AND NOT DIRECTION OF OSL OF MEMBERS.

93

IT. NO. 506.91	BR. NO. B-9	PROJ. NO. BRS 0239(7)	
FOR APPROVAL	**FOR FILES & FIELD**		
LAYOUTS			
APPROVED: 10-27-83	Bancroft & Martin Inc.		
PRINT DIST.	South Portland, Maine 04106		
G 10/11/83 APP.			
B 10-28-83 FAB.			
F&F.	JOB: VERMONT RTE. 7A3 OVER LAKE LAMOILLE MORRISTOWN, VERMONT		
G 12-15-83 APP			
B 12-15-83 FAB			
	CUSTOMER: BECK / BELLUCI		
2 12-15-83 JCM	DESIGNER: STATE OF VERMONT - AGENCY OF TRANS.		
REV. 1 10-7-83 ELA	ORDER NO.	JOB NO.	DRAWING NO. REV.
CHECKED 9-15-83 RK		3-16	E-3 2
DRAWN 9-9-83 LT			

900-04

HARLAN F. SPILLER CO. INC

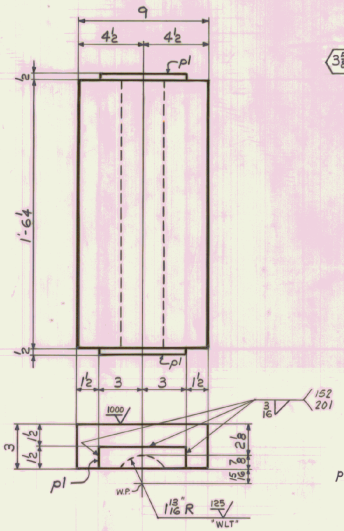

4 - SOLE PLATES - MK. SP1 *

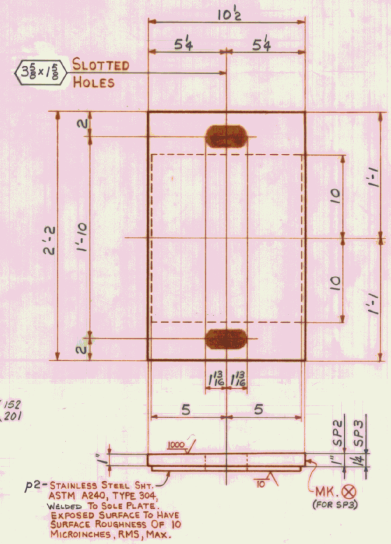

P2 - STAINLESS STEEL SHT., ASTM A240, TYPE 304, WELDED TO SOLE PLATE. EXPOSED SURFACE TO HAVE SURFACE ROUGHNESS OF 10 MICROINCHES, RMS, MAX.

ABUT. 1 4 - SOLE PLATES - MK. SP2 *

ABUT. 2 4 - SOLE PLATES - MK. SP3 *

(AS FURNISHED BY SPENCER DYNAMICS CORP.)

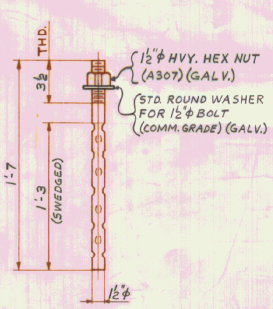

16 - ANCHOR BOLTS - MK. AB1 (A36)

(GALV. PER ASTM A153 AFTER FAB.)

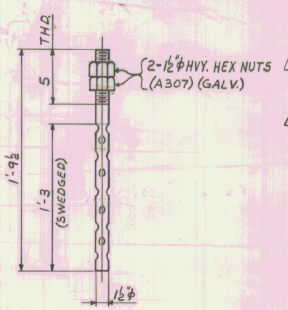

16 - ANCHOR BOLTS - MK. AB2 (A36)

(GALV. PER ASTM A153 AFTER FAB.)

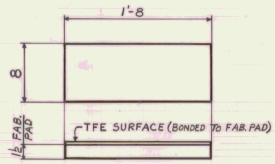

8 - PREFORMED FABRIC PADS - MK. FP1

(AS PER SECT. 731 OF VERMONT STD. SPEC.)

(AS FURNISHED BY SPENCER DYNAMICS CORP.)

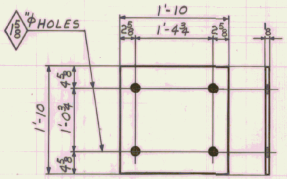

4 - PREFORMED FABRIC PADS - MK. FP2

(AS PER SECT. 731 OF VERMONT STD. SPEC.)

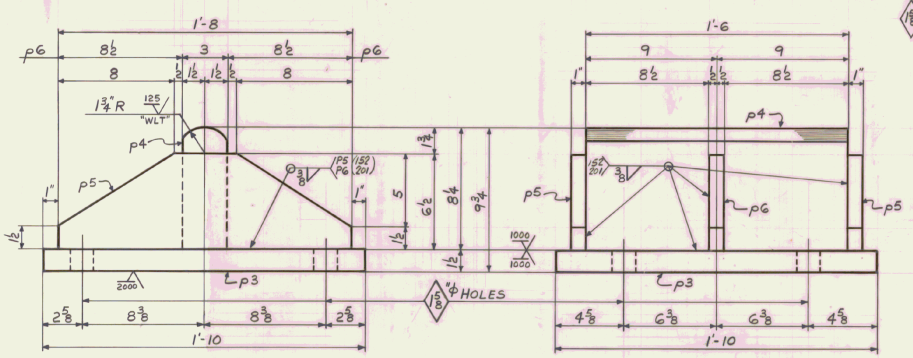

4 - FIXED BEARINGS - MK. FB1 *

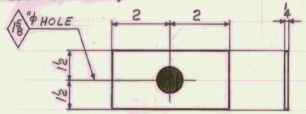

16 - WASHERS - MK. W1 (A36) GALV.

NOTES:

1. 1000/ DENOTES MAXIMUM SURFACE ROUGHNESS ALLOWABLE (IN MICRO INCHES), AS DEFINED IN A.S.A. B46.1 - SURFACE ROUGHNESS, WAVINESS & LAY, PART I.
2. THICKER EDGE OF SOLE PLATE IS TO BE MARKED ⊗.
3. "WLT" DENOTES ONE SHOP COAT OF WHITE LEAD & TALLOW.

SHIP MARK	NO.	MARK	SHAPE	LENGTH	WT.	ITEM NO.	REMARKS
			SOLE PLATES				
* SP1	4		PL 3 x 9	1 6¼	559	1/J	A36 PL PO. J-1391
	8	p1	PL ½ x 1½	0 6	10	1/K	REQ'D @ 22" x 5'-0
△* SP2	4		PL 1" x 10½	2 2	310	1/B	A36 SPENCER PO. J-1393
	4	p2	SHT. 14GA x 10	1 8	17	1/D	FIS STAINLESS STEEL (A240) TYPE 304
△* SP3	4		PL 1¼ x 10½	2 2	387	1/C	A36 FIS (BEV.)
	4	p2	SHT. 14GA. x 10	1 8	17	1/D	FIS STAINLESS STEEL (A240) TYPE 304
* FB1	4		FIXED BEARINGS				
	4	p3	PL 1½ x 22	1 10	823	1/L	A36 PO. J-1391
	4	p4	PL 3 x 8¼	1 6	505	1/M	FBE 1 @ 2¼ x 1'-6
	8	p5	PL 1" x 6½	1 8	295	1/N	FIE 1 @ 6-¼ x
	8	p6	PL 1" x 6½	0 8½	125	1/N	FIE 1 @ 2 CUT PER T.R.L. STD. 9.15
			ANCHOR BOLTS				
AB1	16		ROD 1½"ϕ	1 7	152	1/T	A36 SWEDGE GALV.
AB2	16		ROD 1½"ϕ	1 9½	172	1/U	A36 20° COMM. GRADE
	16		STD. WASH. FOR 1½"ϕ BOLT		7	1/W	
	48		HVY. HEX NUT FOR 1½"ϕ BOLT		63	1/V	1771C A307
W1	16		PL ¼ x 3	0 4	14	1/F	STR. REQ. A36 GALV.
			PREFORMED FABRIC PADS				
FP1	8		PAD 1½ x 8	1 8	49	1/P	STRUCT. TFE SURFACE BONDED ONE SIDE (SPEC. 731)
FP2	4		PAD ⅜ x 22	1 10	7	1/Q	AS PER SECT. 731
			TOTAL WGT. = 3512				

IT. NO. 506.99 | BR. NO. B-9 | PROJ. NO. BRS 0238(2)

FOR APPROVAL | **FOR FILES & FIELD**

STEEL: ASTM. A36 | A572 GR.1 | A588 GR.1 | Unless Noted

WELDING ELECTRODE: E70 | See Welding Proc. | None

SHOP CONN: Bolted | Welded | None

FIELD CONN: Bolted | Welded | None

HOLES: 13/16 | 15/16 | A6 Noted | None

PAINT: None | Shopcoat | Galv. After Fab. | As Noted

SPECIAL PAINT: METALIZED COATING PER VERMONT SPEC. 731.06 - 2 (UNLESS NOTED) *

SPECIAL CLEANING: Blast Clean | None | SSPC-SP6

BRIDGE SHOES

APPROVED: 10-31-83		
PRINT DIST.		
6	10/11/83	APP.
8	10-28-83	FAB.
		F&F.
3	10-28-83	FURCH
6	10-28-83	APP
6	10-31-83	APP
3	10-31-83	FURCH
8	10-31-83	FAB
REV. △	10-31-83	KM
CHECKED	10-3-83	GK
DRAWN	9-9-83	RLA

Bancroft & Martin Inc.
South Portland, Maine 04106

JOB: VERMONT RTE. TH3 OVER LAKE LAMOILLE MORRISTOWN, VERMONT

CUSTOMER: BECK, BELLUCI

DESIGNER: STATE OF VERMONT-AGENCY OF TRANS.

ORDER NO. | JOB NO. 3-16 | DRAWING NO. 51-1 | REV. △

ALL CONNECTIONS DETAILED ON THIS DRAWING REPRESENT BANCROFT & MARTIN INC. STANDARDS. IN APPROVING THIS DRAWING FOR FABRICATION, THE ARCHITECT AND/OR ENGINEER ASSUMES THE RESPONSIBILITY FOR THE STRUCTURAL INTEGRITY OF ALL CONNECTIONS SHOWN.

△ SPEC FOR SP2 & SP3

94

900-07

HARLAN F. SPILLER CO. INC.

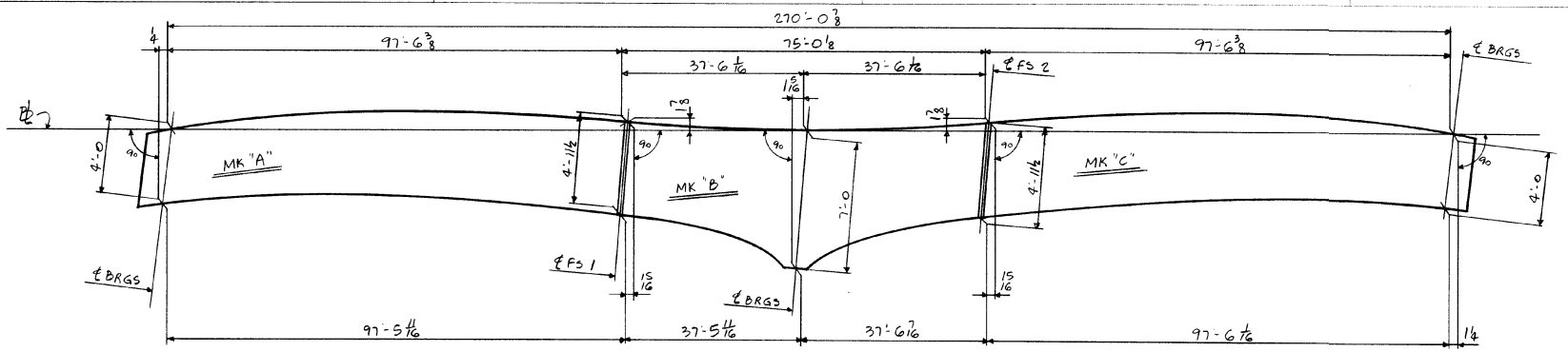

LINE	MK A	MK B	MK C
1	G1A	HG1B	G1C
2	G2A	HG2B	G2C
3	G3A	HG3B	G3C
4	G4A	HG4B	G4C

SHOP ASSEMBLY DIAGRAM - LINES 1 - 4

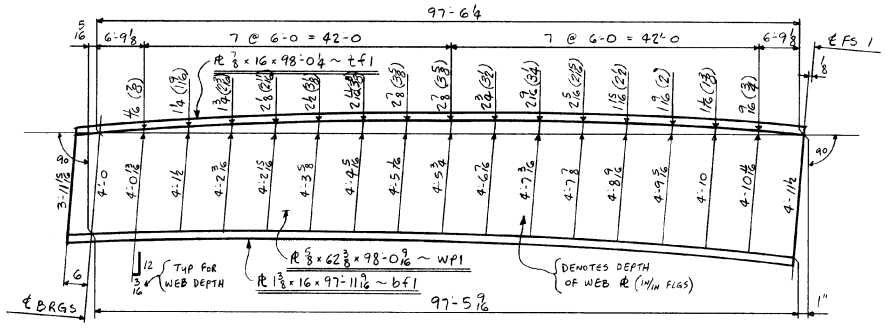

CAMBER DIAGRAM FOR G1A, G2A, G3A, G4A

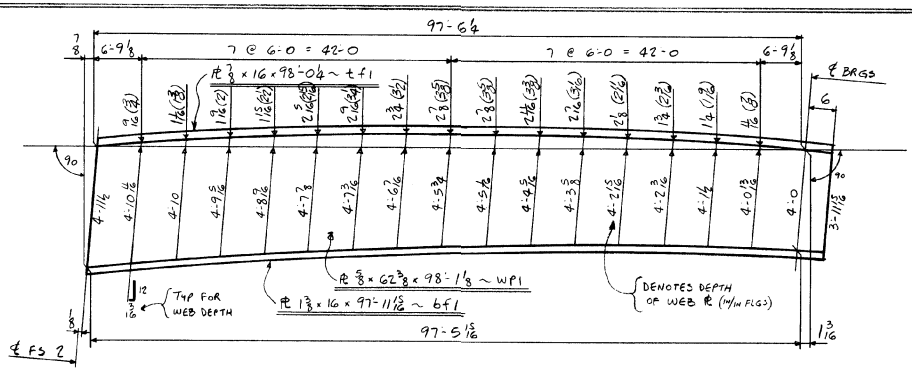

CAMBER DIAGRAM FOR G1C, G2C, G3C, G4C

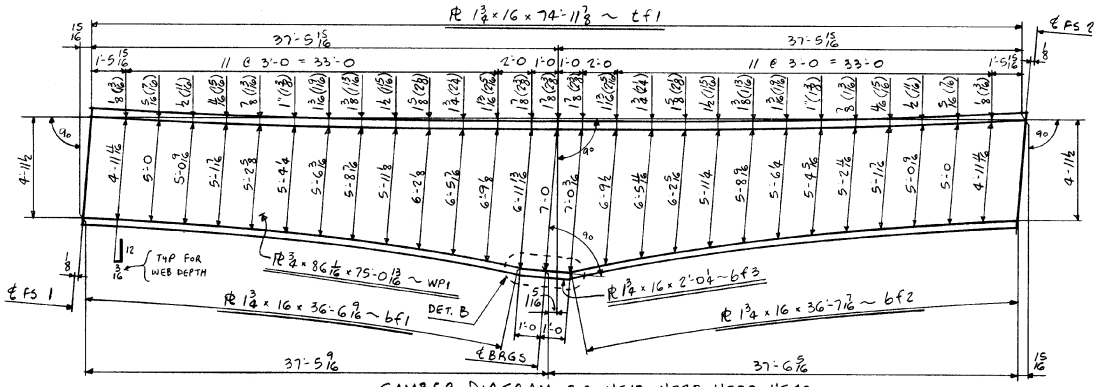

CAMBER DIAGRAM FOR HG1B, HG2B, HG3B, HG4B

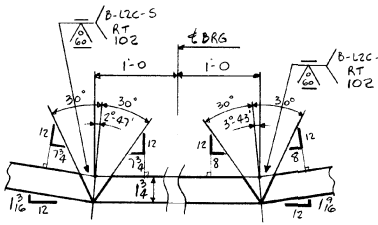

DETAIL B

( ) INDICATES SHOP CAMBER

95

JT NO. 506.91	BR. NO. B-9	PROJ. NO. BRS 0238(2)	
FOR APPROVAL	**FOR FILES & FIELD**		
SHOP ASSEMBLY & CAMBER DIAGRAMS			
APPROVED: 10-27-83	Bancroft & Martin Inc.		
PRINT DIST.	South Portland, Maine 04106		
6 9-19-83 APP	JOB. VERMONT RTE. 100 OVER LAKE LAMOILLE MORRISTOWN, VERMONT		
8 10-28-83 F&F			
6 10-11-83 APP	CUSTOMER: BECK/BELLUCI		
	DESIGNER: STATE OF VERMONT-AGENCY OF TRANS		
REV. △	ORDER NO.	JOB NO.	DRAWING NO. REV.
CHECKED 9-15-83 FK		3-16	52-1 △
DRAWN 9/13/83 CT			

900-05

ABUT. BEG.

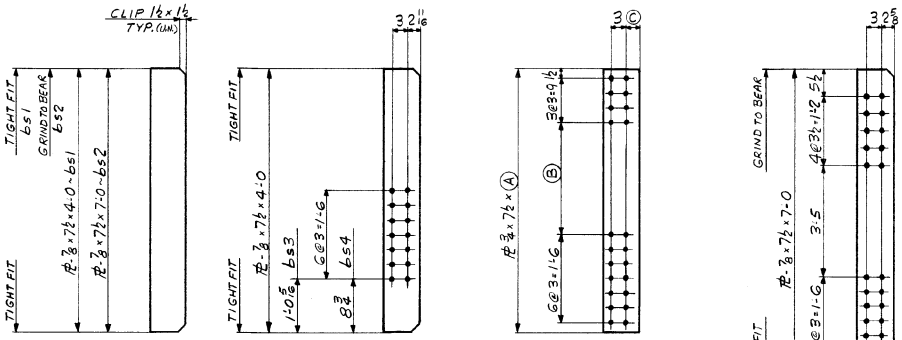

4 - bs1
2 - bs2

4 - bs3
8 - bs4

6 - bs5

MARK	QTY	Ⓐ	Ⓑ	Ⓒ
sf1	12	3'-6 5/8	1'-0 5/8	2 11/16
sf2	12	3'-9¼	1'-3¼	2 11/16
sf3	12	4'-0	1'-5 15/16	2 11/16
sf4	12	4'-2 5/8	1'-8 9/16	2 11/16
sf5	12	4'-7 3/8	2'-1 3/8	2 5/8

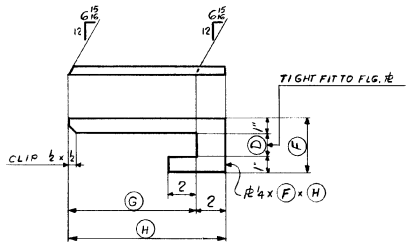

MARK	QTY	Ⓓ	Ⓕ	Ⓖ	Ⓗ
fb1 9/16	2/2	1 3/4	3 3/4	8 13/16	10 13/16
fb2 9/16	1/1	1 3/8	3 3/8	8 3/8	10 3/8

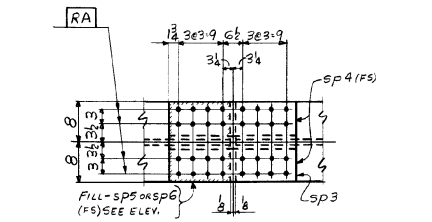

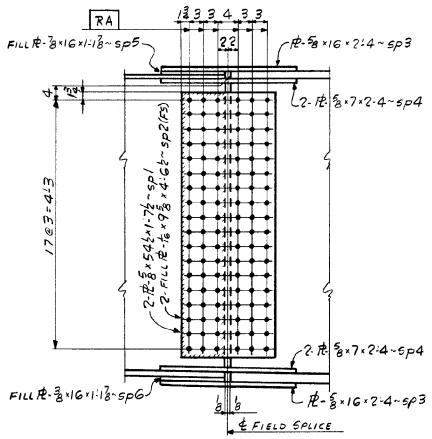

FIELD SPLICE DETAIL

SHOP NOTE:
HOLES NOTED RA TO BE SUB-PUNCHED OR SUB-DRILLED 11/16 AND REAMED TO 15/16 WITH ALL PARTS ASSEMBLED OR DRILLED FULL SIZE (15/16) FROM THE SOLID WITH ALL PARTS ASSEMBLED. ALL GIRDERS MUST BE ASSEMBLED PER SHOP ASSEMBLY DIAGRAM (DWG. 52-1) PRIOR TO REAMING OR DRILLING.

IT. NO. 506.91	BR. NO. B-9	PROJ. NO. BRS 0238 (2)

FOR APPROVAL | **FOR FILES & FIELD**

GIRDER COMPONENTS

APPROVED: 10-27-83		Bancroft & Martin Inc.
PRINT DIST.		South Portland, Maine 04106
6	12/11/83 APP.	
8	10-28-83 FAB.	
	F&F.	

JOB: VERMONT RTE TH3 OVER LAKE LAMOILLE MORRISTOWN, VERMONT

CUSTOMER: BECK/BELLUCI

DESIGNER: STATE OF VERMONT - AGENCY OF TRANS.

REV. △		ORDER NO.	JOB NO.	DRAWING NO.	REV.
CHECKED	10-3-83 GK		3-16	52-2	△
DRAWN	9-24-83 ELC				

96

900-08

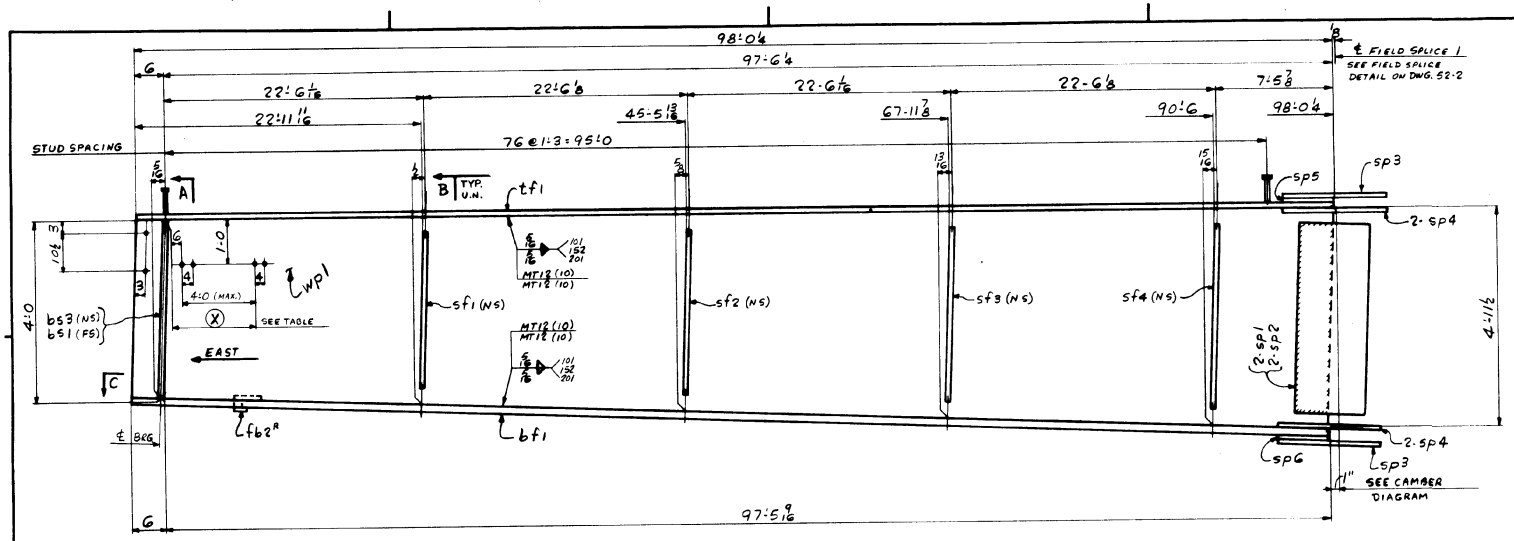

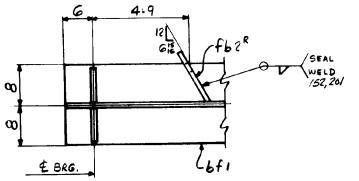

SECT. - C

DIM. Ⓧ	DIM. Ⓧ
4:4	52:4
8:4	56:4
12:4	60:4
16:4	64:4
20:4	68:4
24:4	72:4
28:4	76:4
32:4	80:4
36:4	84:4
40:4	88:4
44:4	92:4
48:4	96:0

ONE - GIRDER - G1A

FOR GIRDER STANDARD DETAILS SEE DWG. 52-2
FOR WEB & CUTTING SK. & FLG. & ASSY SEE DWG. 52-1
FOR SHOP ASSEMBLY DIAGRAM SEE DWG. 52-1

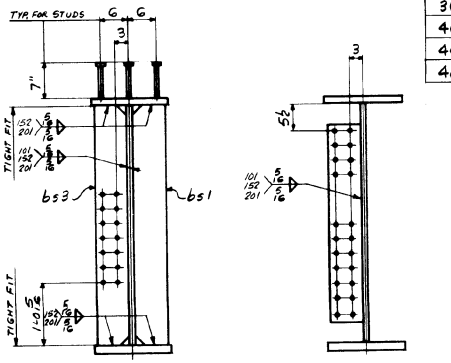

SECT-A

SECT. - B
(SEE ELEV. FOR MARKS)

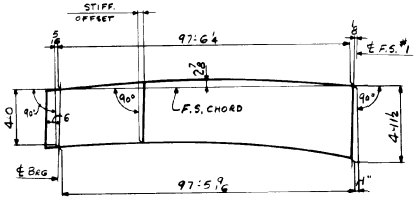

CAMBER DIAGRAM

97

ALL CONNECTIONS DETAILED ON THIS DRAWING REPRESENT BANCROFT & MARTIN INC. STANDARDS IN APPROVING THIS DRAWING FOR FABRICATION, THE ARCHITECT AND/OR ENGINEER ASSUMES THE RESPONSIBILITY FOR THE STRUCTURAL INTEGRITY OF ALL CONNECTIONS SHOWN.

SHIP | BILL OF MATERIAL | JOB NO. 3-1G | DRAWING NO. 52-3 | REV. △

MARK	NO.	MARK	SHAPE	LENGTH	WT.	PIECE MK.	REMARKS
G1A	1		GIRDER				
	1	wp1	PL 5/8 x G2B 3/8	98 0 1/16	11202	P/A	CVN
	1	tf1	PL 3/8 x 16	98 0 1/4	4670	P/E	
	1	bf1	PL 1 3/8 x 16	97 11 7/16	7334	P/D	CVN
	1	bs1	PL 7/8 x 7 1/2	4 0	89	3/J	FCE
	1	bs3	PL 7/8 x 7 1/2	4 0	89	3/J	FCE
	1	sf1	PL 3/4 x 7 1/2	3 6 3/8	#	3/L	
	1	sf2	PL 3/4 x 7 1/2	3 9 1/4	#	3/M	
	1	sf3	PL 3/4 x 7 1/2	4 0	#	3/N	
	1	sf4	PL 3/4 x 7 1/2	4 2 5/8	#	3/O	
	2	sp1	PL 5/8 x 54 1/2	1 7 1/2	#	3/B	CVN
	2	sp2	PL 1/2 x 9 3/8	4 6 1/2	#	3/C	A607Gr(4)
	2	sp3	PL 5/8 x 16	2 4	#	3/D	CVN
	4	sp4	PL 5/8 x 7	2 4	#	3/E	CVN
	1	sp5	PL 7/8 x 16	1 1 7/8	#	3/F	
	1	sp6	PL 3/8 x 16	1 1 7/8	#	3/G	
	1	fb2R	PL 1/4 x 3 3/8	0 10 7/8	3	3/R	
	231		7/8 SHEAR STUD	0 7	385	3/T	A108 AUTO END WELD
			TOTAL WGT = 24256 #				
			* PAY WEIGHT				
	1	sf1	PL 1/2 x 7 1/2	3 6 3/8	45		
	1	sf2	"	3 9 1/4	48		
	1	sf3	"	4 0	51		
	1	sf4	"	4 2 5/8	54		
	2	sp1	PL 1/2 x 54	1 6 2	283		
	2	sp2	PL 1/16 x 9 1/4	4 6	18		
	2	sp3	PL 5/8 x 16	2 3 1/2	156		
	4	sp4	PL 5/8 x 7	2 3 1/2	136		
	1	sp5	PL 7/8 x 16	1 1 3/4	55		
	1	sp6	PL 3/8 x 16	1 1 3/4	23		

IT. NO. 506.91 | BR. NO. B-9 | PROJ. NO. BRS 0298(2)

FOR APPROVAL | **FOR FILES & FIELD**

STEEL: ASTM. A36 | A572 Gr.1 | ☒ A588 Gr.1 | ☒ Unless Noted
WELDING ELECTRODE: E70 | ☒ See Welding Proc. | None
SHOP CONN: Bolted | ☒ Welded | None
FIELD CONN: ☒ Bolted | Welded | None
HOLES: 13/16 | ☒ 15/16 | Unless Noted | None
PAINT: ☒ None | Shopcoat | Galv. After Fab. | As Noted
SPECIAL PAINT:
SPECIAL CLEANING: ☒ Blast Clean | None | SSPC-SP6

GIRDER - G1A

APPROVED: 10-27-83
PRINT DIST.

6	10/11/83	APP.
8	10-28-83	FAB.
		F&F.

REV. △
CHECKED 10-3-83 G.K.
DRAWN 9-26-83 E.L.C.

Bancroft & Martin Inc.
South Portland, Maine 04106

JOB: VERMONT RTE 7H3 OVER LAKE LAMOILLE MORRISTOWN, VERMONT

CUSTOMER: BECK / BELLUCI

DESIGNER: STATE OF VERMONT - AGENCY OF TRANS.

ORDER NO.	JOB NO.	DRAWING NO.	REV.
	3-1G	52-3	△

900-08

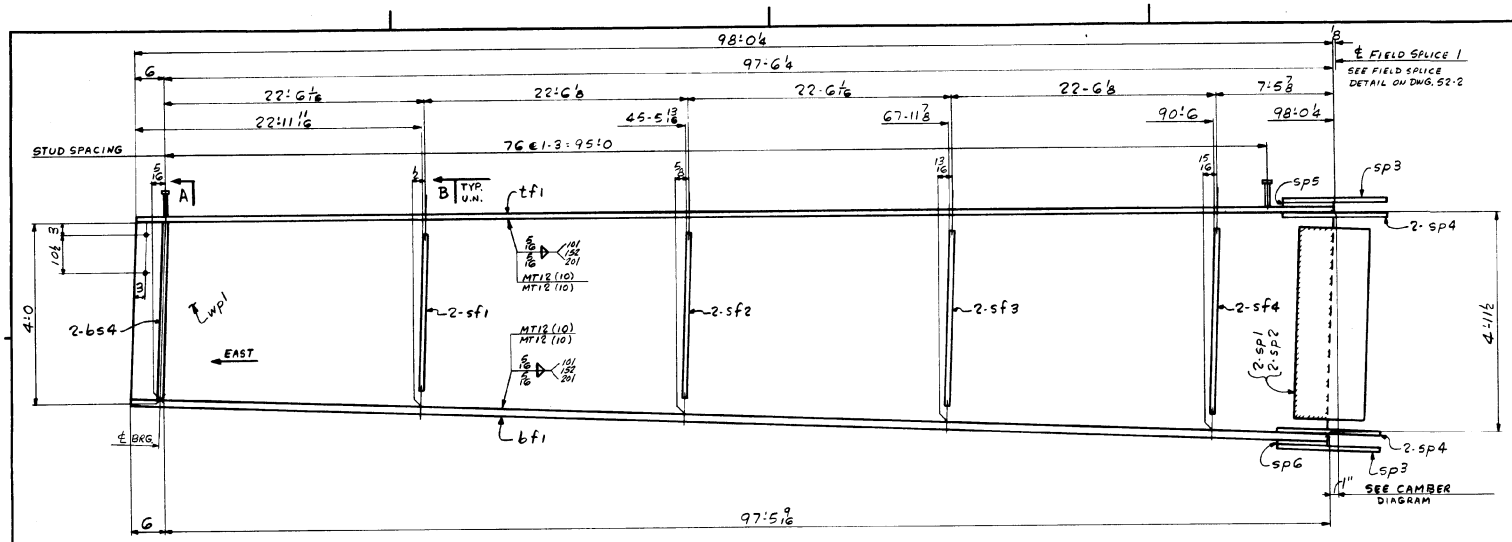

ONE - GIRDER - G2A
ONE - GIRDER - G3A
} ALIKE UNTIL REAMED

FOR GIRDER STANDARD DETAILS SEE DWG. 52-3
FOR WEB ℄ CUTTING SK. & FLG. ℄ ASSY SEE DWG. 52-1
FOR SHOP ASSEMBLY DIAGRAM SEE DWG. 52-1

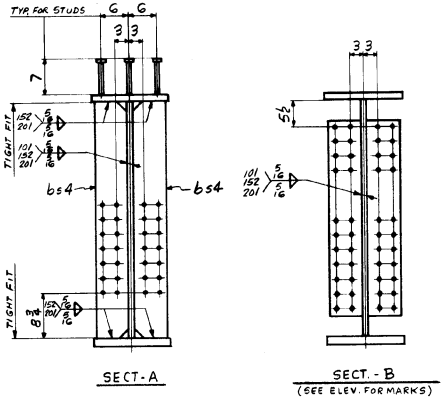

SECT-A

SECT. - B
(SEE ELEV. FOR MARKS)

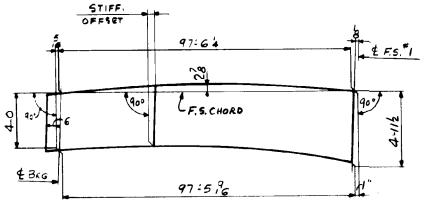

CAMBER DIAGRAM

98

ALL CONNECTIONS DETAILED ON THIS DRAWING REPRESENT DANCROFT & MARTIN INC. STANDARDS IN APPROVING THIS DRAWING FOR FABRICATION THE ARCHITECT AND/OR ENGINEER ASSUMES THE RESPONSIBILITY FOR THE STRUCTURAL INTEGRITY OF ALL CONNECTIONS SHOWN.

SHIP	BILL OF MATERIAL					JOB NO. 3-16		DRAWING NO. 52-4	REV. △
MARK	NO.	MARK	SHAPE	LENGTH		WT.	ITEM NO.		REMARKS
G2A	1		GIRDER						
G3A	1		GIRDER						
	2	wp1	PL 5/16 × G2 3/8	98	0 9/16	2240#	2/A		CVN
	2	tf1	PL ⅞ × 16	98	0¼	9340	2/E		
	2	bf1	PL 1⅜ × 16	97	11 5/16	14668	2/D		CVN
	4	bs4	PL ⅞ × 7½	4	0	356	3/J	7/8	F2E
	4	sf1	PL ¾ × 7½	3	6⅞	*	3/L		
	4	sf2	PL ¾ × 7½	3	9¼	*	3/M		
	4	sf3	PL ¾ × 7½	4	0	*	3/N		
	4	sf4	PL ¾ × 7½	4	2⅝	*	3/O		
	4	sp1	PL ⅝ × 54½	1	7½	*	3/B		CVN
	4	sp2	PL 1/16 × 9⅝	4	6½	*	3/C		AGOG(4)
	4	sp3	PL ⅝ × 16	2	4	*	3/D		CVN
	8	sp4	PL ⅝ × 7	2	4	*	3/E	5/8	CVN
	2	sp5	PL ⅞ × 16	1	1⅜	*	3/F		
	2	sp6	PL ⅜ × 16	1	1⅜	*	3/G		
	462		⅞ ϕ SHEAR STUD	0	7	~~0~~	3/T		A108 AUTO END WELD
			TOTAL WGT. = 48902 #						
			# PAY WEIGHT						
	4	sf1	PL ½ x 7½	3	6⅞	180			
	4	sf2	"	3	9¼	192			
	4	sf3	"	4	0	204			
	4	sf4	"	4	2⅝	216			
	4	sp1	PL ½ x 54	1	6½	566			
	4	sp2	PL 1/16 x 9¼	4	6	36			
	4	sp3	PL ⅝ x 16	2	3½	312			
	8	sp4	PL ⅝ x 7	2	3½	272			
	2	sp5	PL ⅞ x 16	1	1¾	110			
	2	sp6	PL ⅜ x 16	1	1¾	46			

IT. NO. 506.91 | BR. NO. B-9 | PROJ. NO. BRS 0238(2)

FOR APPROVAL | **FOR FILES & FIELD**

STEEL: ASTM. A36 | A572 GR. | A588 GR. | Unless Noted
WELDING ELECTRODE: E70 | See Welding Proc. | None
SHOP CONN: Bolted | Welded | None
FIELD CONN: Bolted | Welded | None
HOLES: 13/16 | 15/16 | Unless Noted | None
PAINT: None | Shopcoat | Galv. After Fab. | As Noted
SPECIAL PAINT:
SPECIAL CLEANING: Blast Clean | None | SSPC-SP6

GIRDER - G2A & G3A

APPROVED: 10-27-83			Bancroft & Martin Inc.
PRINT DIST.			South Portland, Maine 04106
6	10/11/83	APP.	JOB: VERMONT RTE 7H3 OVER LAKE LAMOILLE MORRISTOWN, VERMONT
8	10-28-83	FAB.	
		F&F.	CUSTOMER: BECK / BELLUCI
REV. △			DESIGNER: STATE OF VERMONT - AGENCY OF TRANS.
CHECKED	10-3-83	G.K.	ORDER NO. / JOB NO. 3-16 / DRAWING NO. 52-4 / REV. △
DRAWN	9-26-83	E.L.C.	

900-08

HARLAN P. SPILLER CO. INC. 34195

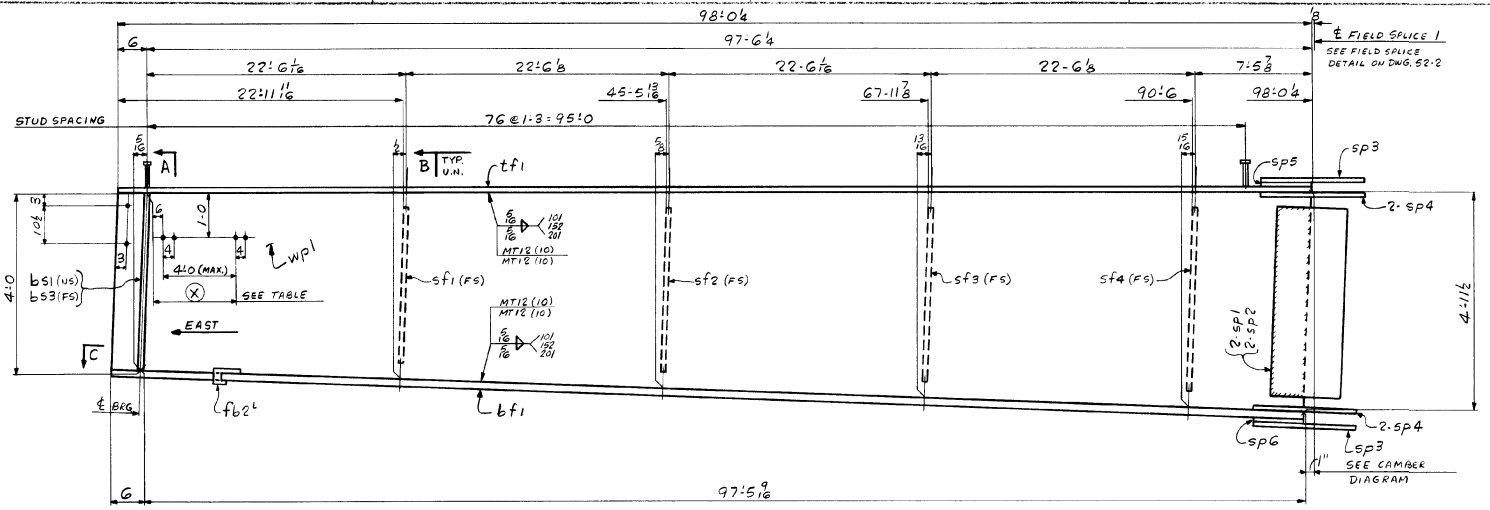

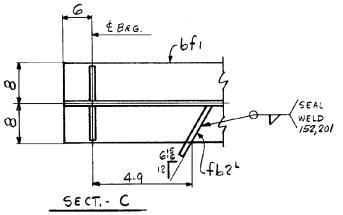

SECT. - C

DIM. (X)	DIM. (X)
4'-4	52'-4
8'-4	56'-4
12'-4	60'-4
16'-4	64'-4
20'-4	68'-4
24'-4	72'-4
28'-4	76'-4
32'-4	80'-4
36'-4	84'-4
40'-4	88'-4
44'-4	92'-4
48'-4	96'-0

ONE - GIRDER - G4A

FOR GIRDER STANDARD DETAILS SEE DWG. 52-2
FOR WEB ℄ CUTTING SK. & FLG. ℄ ASSY SEE DWG. 52-1
FOR SHOP ASSEMBLY DIAGRAM SEE DWG. 52-1

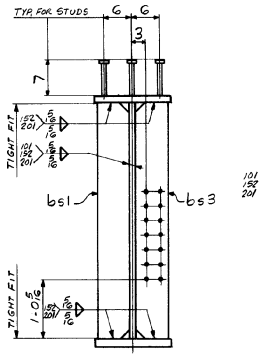

SECT-A

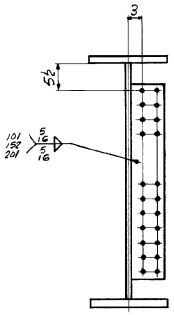

SECT. - B
(SEE ELEV. FOR MARKS)

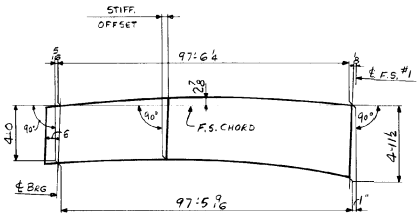

CAMBER DIAGRAM

SHIP	BILL OF MATERIAL							JOB NO. 3-16	DRAWING NO. 52-5
MARK	NO.	MARK	SHAPE	LENGTH		WT	ITEM NO		REMARKS
G4A	1		GIRDER						
	1	wp1	PL 5/8 × 62 3/8	98	0 9/16	11202	2/A		CVN
	1	tf1	PL 1/2 × 16	98	0 4	4670	2/E		
	1	bf1	PL 1 3/8 × 16	97	11 9/16	7334	2/D		CVN
	1	bs1	PL 7/8 × 7 1/2	4	0	89	3/J	1/2	FZE
	1	bs3	PL 7/8 × 7 1/2	4	0	89	3/J	1/2	FZE
	1	sf1	PL 3/4 × 7 1/2	3	6 5/8	*	3/L		
	1	sf2	PL 3/4 × 7 1/2	3	9 4	*	3/M		
	1	sf3	PL 3/4 × 7 1/2	4	0	*	3/N		
	1	sf4	PL 3/4 × 7 1/2	4	2 5/8	*	3/O		
	2	sp1	PL 5/8 × 54 1/2	1	7 1/2	*	3/B		CVN
	2	sp2	PL 1/16 × 9 5/8	4	6 1/2	*	3/C		A606(4)
	2	sp3	PL 5/8 × 16	2	4	*	3/D		CVN
	4	sp4	PL 5/8 × 7	2	4	*	3/E	1/2	CVN
	1	sp5	PL 7/8 × 16	1	1 7/8	*	3/F		
	1	spG	PL 3/8 × 16	1	1 7/8	*	3/G		
	1	fb2	PL 4 × 3 3/8	0	10 7/8	3	3/R		
	231		7/8 ϕ SHEAR STUD	0	7	305	3/T		AIOB AUTO ARC'D END WELD
			TOTAL WGT. = x112 56						
			* PAY WEIGHT						
	1	sf1	PL 3/4 x 7 1/2	3	6 5/8	45			
	1	sf2	"	3	9 4	48			
	1	sf3	"	4	0	51			
	1	sf4	"	4	2 5/8	54			
	2	sp1	PL 5/8 x 54	1	6 2	203			
	2	sp2	PL 1/16 x 9 4	4	6	18			
	2	sp3	PL 5/8 x 16	2	3 1/2	156			
	4	sp4	PL 5/8 x 7	2	3 1/2	136			
	1	sp5	PL 7/8 x 16	1	1 3/4	55			
	1	spG	PL 3/8 x 16	1	1 3/4	23			

CL. NO. 506.91 | BR. NO. B-9 | PROJ. NO. BRS 0238(2)

FOR APPROVAL | **FOR FILES & FIELD**

STEEL: ASTM [ ] [ ] [X] ASBC [ ] [X] [ ]
WELDING ELECTRODE: [ ] [X] [ ] [ ]
SHOP COAT: [ ] [X] [ ]
FIELD COAT: [X] [ ] [ ]
HOLES: [ ] [X] [ ] [X] [ ]
PAINT: [X] [ ] [ ] [ ]
SPECIAL PAINT:
SPECIAL CLEANING: [X] [ ] SSPC-SP6

GIRDER - G4A

APPROVED: 10-27-83

	PRINT DIST	
C	10/11/83	APP.
8	10-28-83	FAB.
		F&E

Bancroft & Martin Inc.
South Portland, Maine 04106

JOB: VERMONT RTE TH3 OVER LAKE LAMOILLE MORRISTOWN, VERMONT

CUSTOMER: BECK / BELLUCI

DESIGNER: STATE OF VERMONT - AGENCY OF TRANS.

REV.		ORDER NO.	JOB NO.	DRAWING NO.	REV.
CHECKED	10-3-83 G.K.		3-16	52-5	
DRAWN	9-26-83 ELC				

900-08

99

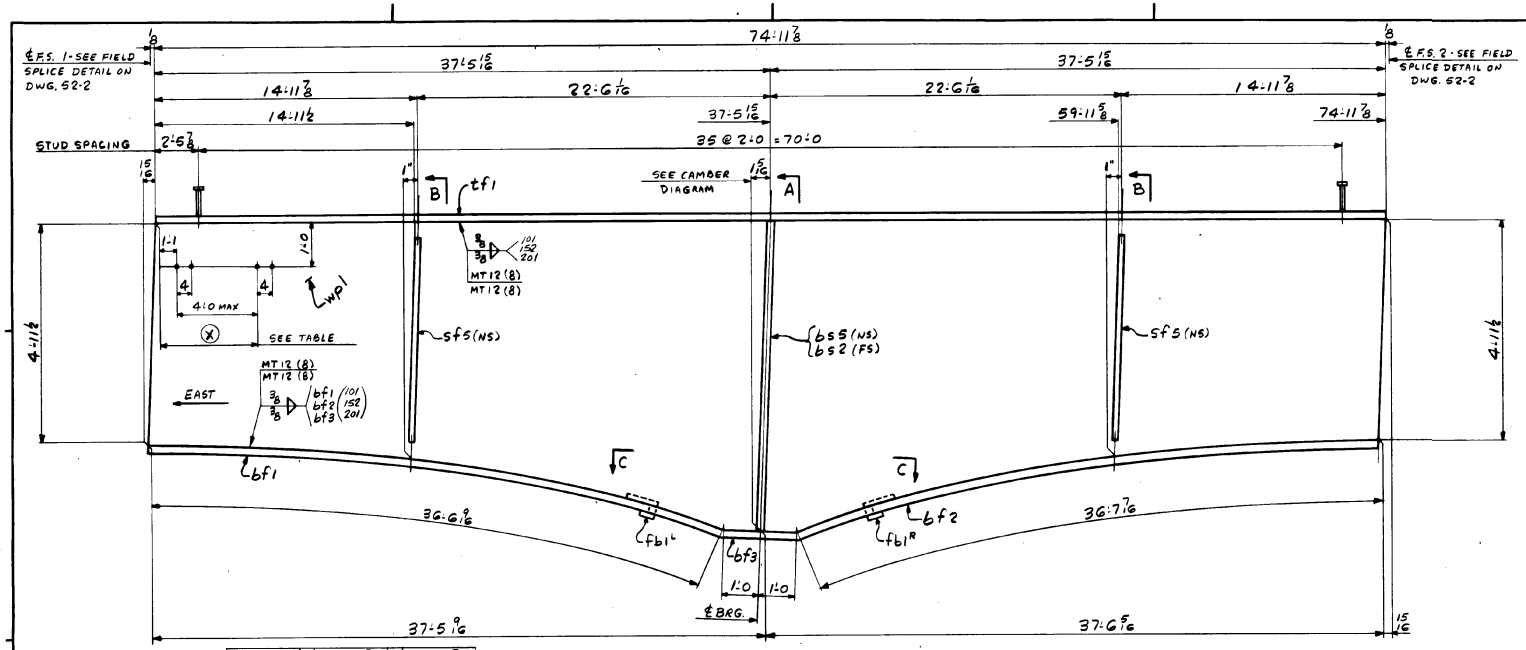

DIM. (X)	DIM. (X)	DIM. (X)
4:10	31:7	54:7
8:7	35:5	58:5
12:5	39:3	62:3
16:3	43:1	66:1
20:1	46:11	69:10
23:11	50:9	73:7
27:9		

ONE - GIRDER - HG1B

FOR GIRDER STANDARD DETAILS SEE DWG. 52-2
FOR WEB PL CUTTING SK. & FLG. PL ASSY SEE DWG. 52-1
FOR SHOP ASSEMBLY DIAGRAM SEE DWG. 52-1

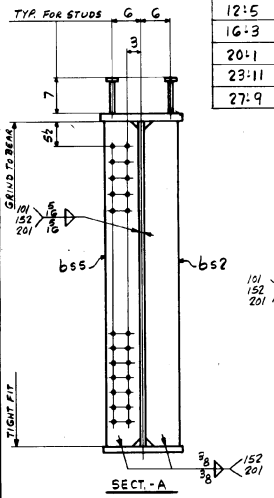

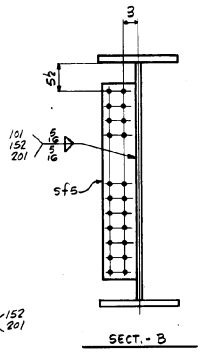

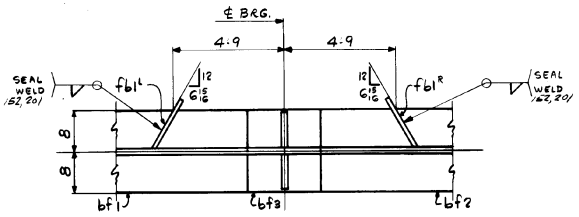

SECT. C-C

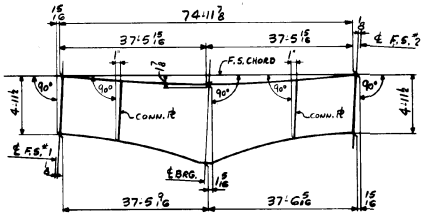

CAMBER DIAGRAM

100

ALL CONNECTIONS DETAILED ON THIS DRAWING REPRESENT BANCROFT & MARTIN INC. STANDARDS. IN APPROVING THIS DRAWING FOR FABRICATION, THE ARCHITECT AND/OR ENGINEER ASSUMES THE RESPONSIBILITY FOR THE STRUCTURAL INTEGRITY OF ALL CONNECTIONS SHOWN.

SHIP MARK	NO.	MARK	SHAPE	LENGTH		WT.	PAINT AREA	REMARKS
HG1B	1		GIRDER					
	1	wp1	PL 3/4 x 86 1/16	75	0 13/16	12905	S/B	CVN 1 @ 90 7/16 x 75 @ 2EA STUD
	1	tf1	PL 1 3/4 x 16	74	11 7/8	7165	S/G	CVN 1 @ 73'-3
	1	bf1	PL 1 3/4 x 16	36	6 1/16	3492	S/H	1 @ 36'-11
	1	bf2	PL 1 3/4 x 16	36	7 1/16	3489	S/H	1 @ 36'-10
	1	bf3	PL 1 3/4 x 16	2	0 4	193	S/I	FIELD 1 @ 39'-10 ABUT
	1	bs2	PL 7/8 x 7 1/2	7	0	156	3/K	FIE,MIE 1 @ 74'-6
	1	bs5	PL 7/8 x 7 1/2	7	0	156	3/K	FIE,MIE 1 @ 73'-0
	2	sf5	PL 3/4 x 7 1/2	4	7 3/8	#	3/L	FRAMED STIFF ABOVE
	1/1	fb1 2/2	PL 4 x 3 3/4	0	10 13/16	6	3/R	REC 4 x 20 x 10'-0
	72		7/8 ø SHEAR STUD	0	7	9#	3/T	AWS AUTO STUD WELD
			TOTAL WGT =	27850				
			# PAY WEIGHT					
	2	sf5	PL 1/2 x 7 1/2	4	7 3/8	118		

IT. NO. 506.91 | BR. NO. B-9 | PROJ. NO. BRS 0238(2)

FOR APPROVAL | **FOR FILES & FIELD**

STEEL: ASTM. A36 | A572 GR.1 | ABBR (GR) | Unless Noted
WELDING ELECTRODE: E70 | See Welding Proc. | None
SHOP CONN: Bolted | Welded | None
FIELD CONN: Bolted | Welded | None
HOLES: 13/16 | 18/18 | Unless Noted | None
PAINT: None | Shopcoat | Galv. After Fab. | As Noted
SPECIAL PAINT:
SPECIAL CLEANING: Blast Clean | None | SSPC - SP6

GIRDER - HG1B

APPROVED: 10-27-83			
PRINT DIST.			
6	10/11/83	APP.	
8	10-28-83	FAB.	
		F&F.	
REV. △			
CHECKED	10-3-83	GK	
DRAWN	9-27-83	ELC	

Bancroft & Martin Inc.
South Portland, Maine 04106

JOB: VERMONT RTE TH3 OVER LAKE LAMOILLE MORRISTOWN, VERMONT
CUSTOMER: BECK / BELLUCI
DESIGNER: STATE OF VERMONT - AGENCY OF TRANS.

ORDER NO.	JOB NO.	DRAWING NO.	REV.
	3-16	52-6	△

900-08

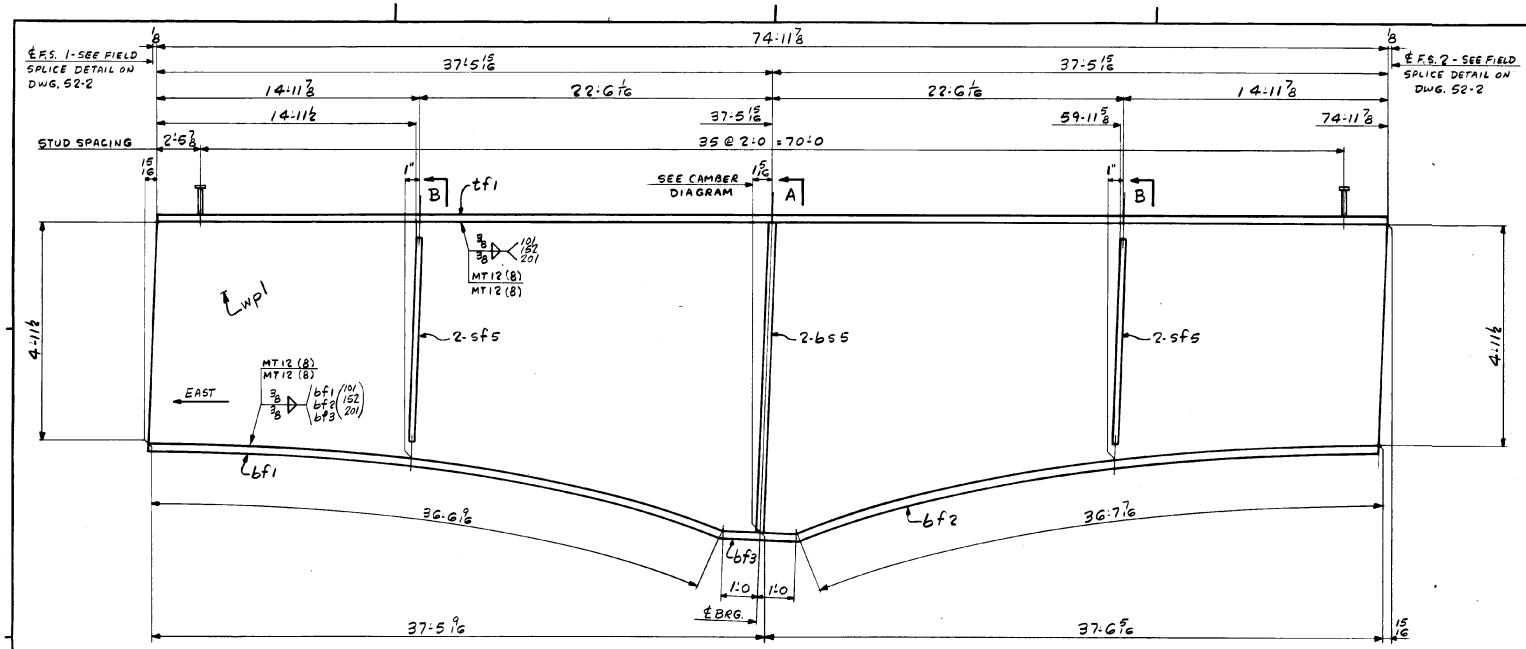

ONE - GIRDER - HG2B
ONE - GIRDER - HG3B
} ALIKE UNTIL REAMED

FOR GIRDER STANDARD DETAILS SEE DWG. 52-2
FOR WEB ℞ CUTTING SK. & FLG. ℞ ASSY SEE DWG. 52-1
FOR SHOP ASSEMBLY DIAGRAM SEE DWG. 52-1

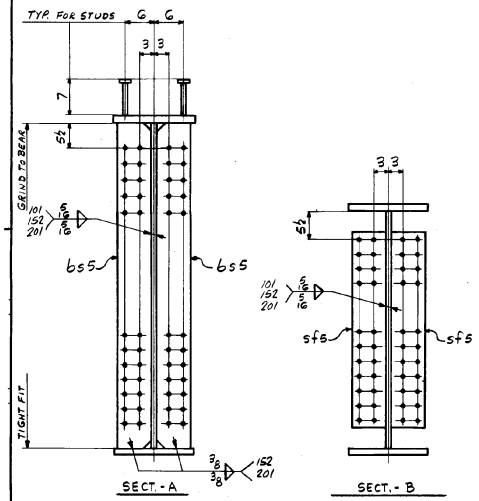

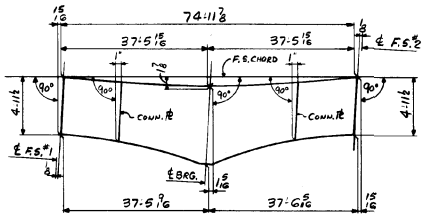

CAMBER DIAGRAM

ALL CONNECTIONS DETAILED ON THIS DRAWING REPRESENT BANCROFT & MARTIN INC. STANDARDS. IN APPROVING THIS DRAWING FOR FABRICATION, THE ARCHITECT AND/OR ENGINEER ASSUMES THE RESPONSIBILITY FOR THE STRUCTURAL INTEGRITY OF ALL CONNECTIONS SHOWN.

SHIP	BILL OF MATERIAL							JOB NO. 3-16	DRAWING NO. 52-7	REV. △
MARK	NO.	MARK	SHAPE	LENGTH		WT.	ITEM NO.		REMARKS	
HG2B	1		GIRDER							
HG3B	1		GIRDER							
	2	wpl	℞ ¾ × 8G 1/16	75	0 13/16	25810	P/B		CVN 2 @ PL 75'-0" 2 @ 74'-11 3/8	
	2	tf1	℞ 1 3/8 × 16	74	11⅞	14290	P/G		CVN 2 @ 74'-3	
	2	bf1	℞ 1 3/8 × 16	36	G 9/16	6964	P/H		2 @ 36'-11	
	2	bf2	℞ 1 3/8 × 16	36	7 7/16	6978	P/H		2 @ 37'-2 1/2 CAMBER IN ±1	
	2	bf3	℞ 1 3/8 × 16	2	0¼	385	P/I		CUT FROM 36'-2 MAIN	
	4	bs5	℞ ⅞ × 7½	7	0	625	3/16	1/2	FIELMIE 1'-9½ × 13'-0	
	8	sf5	℞ ¾ × 7½	4	7⅜	#	P/B	1/2	FROM 7/8 WASTE STOCK	
	144		⅞ Ø SHEAR STUD	0	7	126	P/T		AIOB AUTO GAGE END WELD 3.022	
						TOTAL WGT. = 55523				
			# PAY WEIGHT							
	8	sf5	℞ ½ × 7½	4	7⅜	471				

IT. NO. 506.91 | BR. NO. B-9 | PROJ. NO. BRS 0238(2)

FOR APPROVAL | **FOR FILES & FIELD**

STEEL: ASTM. [ ] A36 [ ] A572 GR1 [X] A588 GR1 [X] Unless Noted
WELDING ELECTRODE: [ ] E70 [X] See Welding Proc. [ ] None
SHOP CONN: [ ] Bolted [X] Welded [ ] None
FIELD CONN: [X] Bolted [ ] Welded [ ] None
HOLES: [ ] 13/16 [X] 15/16 [ ] Unless Noted [ ] None
PAINT: [X] None [ ] Shopcoat [ ] Galv. After Fab. [ ] As Noted
SPECIAL PAINT:
SPECIAL CLEANING: [X] Blast Clean [ ] None SSPC - SP6

GIRDER - HG2B & HG3B

APPROVED: 10-27-83		
PRINT DIST		
6	10/11/83	APP.
8	10-28-83	FAB.
		F&F.

Bancroft & Martin Inc.
South Portland, Maine 04106

JOB: VERMONT RTE TH3 OVER LAKE LAMOILLE MORRISTOWN, VERMONT

CUSTOMER: BECK / BELLUCI

DESIGNER: STATE OF VERMONT - AGENCY OF TRANS.

REV. △			ORDER NO.	JOB NO.	DRAWING NO.	REV.
CHECKED	10-3-83	GK		3-16	52-7	△
DRAWN	9-27-83	ELC				

900-08

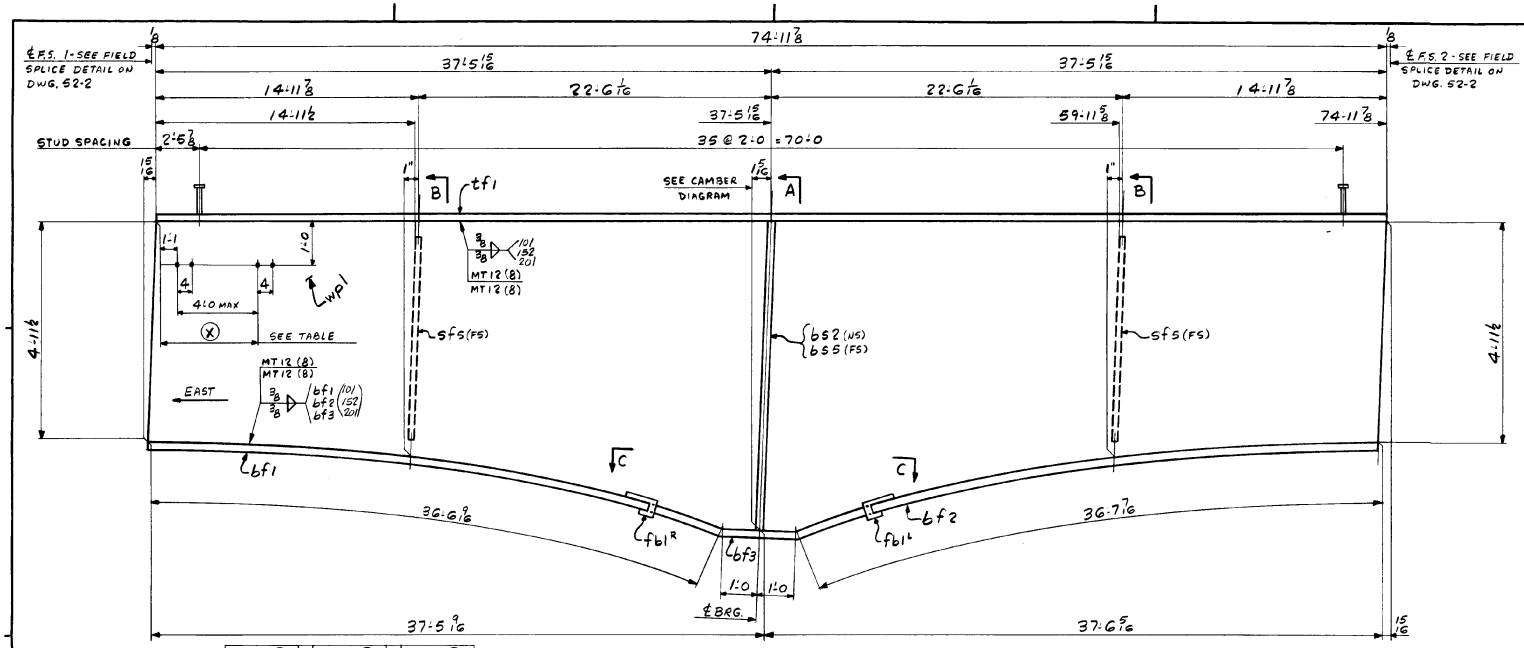

DIM. (X)	DIM. (X)	DIM. (X)
4:10	31:7	54:7
8:7	35:5	58:5
12:5	39:3	62:3
16:3	43:1	66:1
20:1	46:11	69:10
23:11	50:9	73:7
27:9		

ONE - GIRDER - HG4B

FOR GIRDER STANDARD DETAILS SEE DWG. 52-2
FOR WEB & CUTTING SK. & FLG. & ASSY SEE DWG. 52-1
FOR SHOP ASSEMBLY DIAGRAM SEE DWG. 52-1

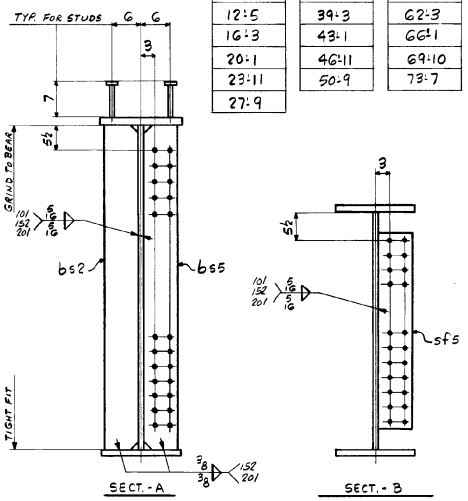

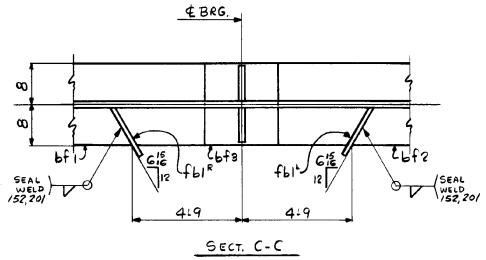

SECT. C-C

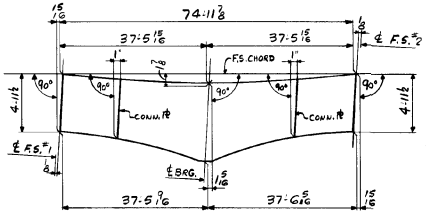

CAMBER DIAGRAM

102

ALL CONNECTIONS DETAILED ON THIS DRAWING REPRESENT BANCROFT & MARTIN INC. STANDARDS IN APPROVING THIS DRAWING FOR FABRICATION, THE ARCHITECT AND/OR ENGINEER ASSUMES THE RESPONSIBILITY FOR THE STRUCTURAL INTEGRITY OF ALL CONNECTIONS SHOWN.

REV.	DATE	BY
CHECKED	10-3-83	GK
DRAWN	9-27-83	ELC

SHIP

BILL OF MATERIAL

JOB NO. 3-16 | DRAWING NO. 52-8 | REV. △

MARK	NO.	MARK	SHAPE	LENGTH	WT.	ITEM NO.	REMARKS
HG4B	1		GIRDER				
	1	wp1	PL ¾ × 86 1/16	75 0 13/16	12905	B/B	CVN
	1	tf1	PL 1 3/8 × 16	74 11⅞	7145	B/G	CVN
	1	bf1	PL 1 3/8 × 16	36 6 9/16	3482	B/H	
	1	bf2	PL 1 3/8 × 16	36 7 1/16	3489	B/H	
	1	bf3	PL 1 3/8 × 16	2 0 1/4	193	B/I	
	1	bs2	PL ⅞ × 7½	7 0	156	3/K	F.E. MIE
	1	bs5	PL ⅞ × 7½	7 0	156	3/K	F.E. MIE
	2	sf5	PL ¾ × 7½	4 7⅜	*	3/P	
	1/1	fb1	PL 4 × 3¾	0 10 13/16	6	3/R	
	72		⅞ ø STUD	0 7	95	3/T	
			TOTAL WGT. = 27650				
			* PAY WEIGHT				
	2	sf5	PL ½ × 7½	4 7⅜	118		

IT. NO. 506.91 | BR. NO. B-9 | PROJ. NO. BRS 0238(2)

FOR APPROVAL | **FOR FILES & FIELD**

STEEL: ASTM.	A36	A572 GR.1	☒ A588 GR.1	☒ Unless Noted		
WELDING ELECTRODE:	E70	☒ See Welding Proc.	None			
SHOP CONN:	Bolted	☒ Welded	None			
FIELD CONN:	☒ Bolted	Welded	None			
HOLES:	13/16	☒ 15/16		Unless Noted	None	
PAINT:	☒ None	Shopcoat	Galv. After Fab.	As Noted		
SPECIAL PAINT:						
SPECIAL CLEANING:	☒ Blast Clean	None	SSPC - SP6			

GIRDER - HG4B

APPROVED: 10-27-83
PRINT DIST.
G 10/11/83 APP.
A 10-28-83 FAB.
F&F.

Bancroft & Martin Inc.
South Portland, Maine 04106

JOB: VERMONT RTE TH3 OVER LAKE LAMOILLE MORRISTOWN, VERMONT

CUSTOMER: BECK / BELLUCI

DESIGNER: STATE OF VERMONT - AGENCY OF TRANS.

ORDER NO. | JOB NO. 3-16 | DRAWING NO. 52-8 | REV. △

900-08

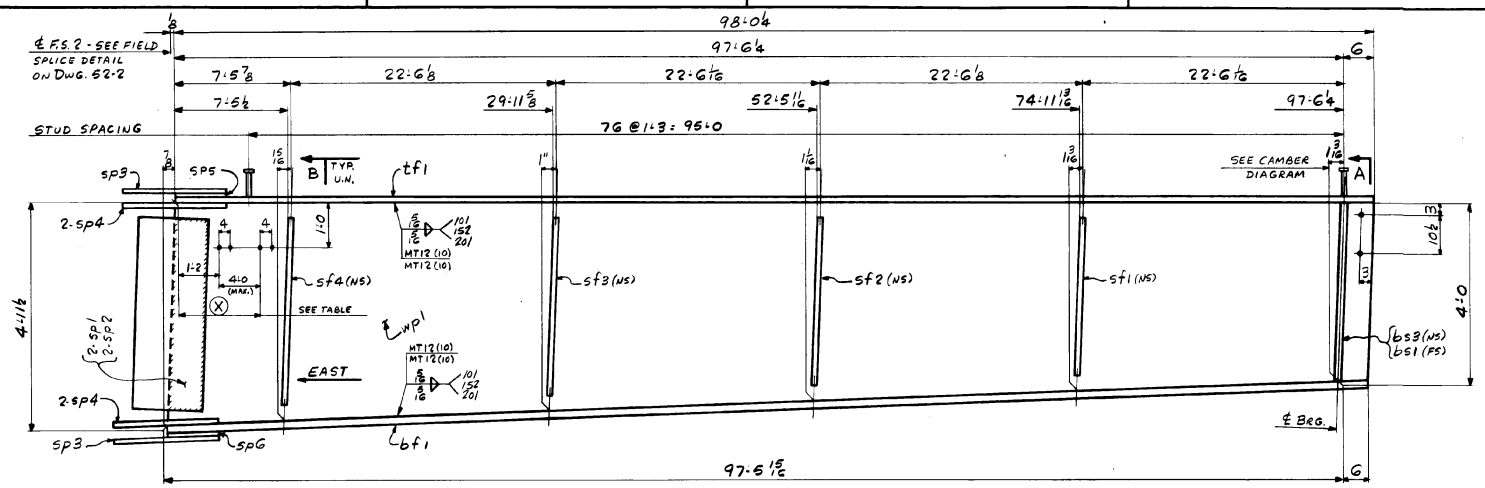

DIM. (X)	DIM. (X)
5:2	53:0
9:0	57:0
13:0	61:0
17:0	65:0
21:0	69:0
25:0	73:0
29:0	77:0
33:0	81:0
37:0	85:0
41:0	89:0
45:0	93:0
49:0	96:8

ONE - GIRDER - G1C

FOR GIRDER STANDARD DETAILS SEE DWG. 52-2
FOR WEB PL CUTTING SK. & FLG. PL ASSY SEE DWG. 52-1
FOR SHOP ASSEMBLY DIAGRAM SEE DWG. 52-1

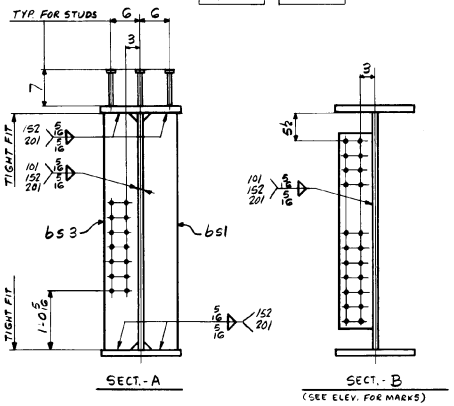

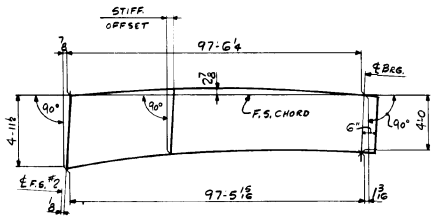

CAMBER DIAGRAM

SHIP	BILL OF MATERIAL							JOB NO. 3-16	DRAWING NO. 52-9	REV. △
MARK	NO.	MARK	SHAPE	LENGTH		WT.	STEEL SPEC.		REMARKS	
G1C	1		GIRDER							
	1	wp1	PL 5/8 × G2 3/8	98	1/8	11202	S/A	CVN		
	1	tf1	PL 7/8 × 16	98	0 6/8	4670	S/E			
	1	bf1	PL 1 3/8 × 16	97	11 15/16	7336	S/D	CVN		
	1	bs1	PL 7/8 × 7 1/2	4	0	89	S/J	F/F	FBE	
	1	bs3	PL 7/8 × 7 1/2	4	0	89	S/J	F/F	FBE	
	1	sf1	PL 3/4 × 7 1/2	3	6 5/8	*	S/L			
	1	sf2	PL 3/4 × 7 1/2	3	9 1/4	*	S/M			
	1	sf3	PL 3/4 × 7 1/2	4	0	*	S/N			
	1	sf4	PL 3/4 × 7 1/2	4	2 5/8	*	S/O			
	2	sp1	PL 5/8 × 54 1/2	1	7 1/2	*	S/B	CVN		
	2	sp2	PL 1/2 × 9 5/8	4	6 1/2	*	S/C	A606(4)		
	2	sp3	PL 3/8 × 16	2	4	*	S/D	CVN		
	4	sp4	PL 3/8 × 7	2	4	*	S/B	CVN		
	1	sp5	PL 3/8 × 16	1	1 3/8	*	S/E			
	1	sp6	PL 3/8 × 16	1	1 3/8	*	S/G			
	231		7/8 ϕ SHEAR STUD	0	7	305	S/T	A108 Auto ARC-EB END WELD		
			TOTAL WGT =	24	255					
			* PAY WEIGHT							
	1	sf1	PL 1/2 × 7 1/2	3	6 3/8	45				
	1	sf2	"	3	9 1/4	48				
	1	sf3	"	4	0	51				
	1	sf4	"	4	2 5/8	54				
	2	sp1	PL 1/2 × 54	1	6 1/2	283				
	2	sp2	PL 1/2 × 9 1/4	4	6	18				
	2	sp3	PL 3/8 × 16	2	3 1/2	156				
	4	sp4	PL 3/8 × 7	2	3 1/2	136				
	1	sp5	PL 3/8 × 16	1	1 3/4	55				
	1	sp6	PL 3/8 × 16	1	1 3/4	23				

IT. NO. 506.91 | BR. NO. B-9 | PROJ. NO. BRS 0238(2)

FOR APPROVAL | **FOR FILES & FIELD**

STEEL: ASTM.	A36	A572 GR.1	☒ A588 GR.1	☒ Unless Noted		
WELDING ELECTRODE:	E70	☒ See Welding Proc.	None			
SHOP CONN:	Bolted	☒ Welded	None			
FIELD CONN:	☒ Bolted	Welded	None			
HOLES:	13/16	☒ 15/16		Unless Noted	None	
PAINT:	☒ None	Shopcoat	Galv. After Fab.	As Noted		
SPECIAL PAINT:						
SPECIAL CLEANING:	☒ Blast Clean	None	SSPC - SP6			

GIRDER - G1C

APPROVED: 10-27-83		
PRINT DIST		
10	10/11/93	APP.
8	10-28-83	FAB.
		F&F.
REV. △		
CHECKED	10-3-83	GK
DRAWN	9-28-83	ELC

Bancroft & Martin Inc.
South Portland, Maine 04106

JOB: VERMONT RTE TH3 OVER LAKE LAMOILLE MORRISTOWN, VERMONT

CUSTOMER: BECK / BELLUCI

DESIGNER: STATE OF VERMONT - AGENCY OF TRANS.

ORDER NO.	JOB NO.	DRAWING NO.	REV.
	3-16	52-9	△

ALL CONNECTIONS DETAILED ON THIS DRAWING REPRESENT BANCROFT & MARTIN INC. STANDARDS IN APPROVING THIS DRAWING FOR FABRICATION, THE ARCHITECT AND/OR ENGINEER ASSUMES THE RESPONSIBILITY FOR THE STRUCTURAL INTEGRITY OF ALL CONNECTIONS SHOWN.

103

900-08

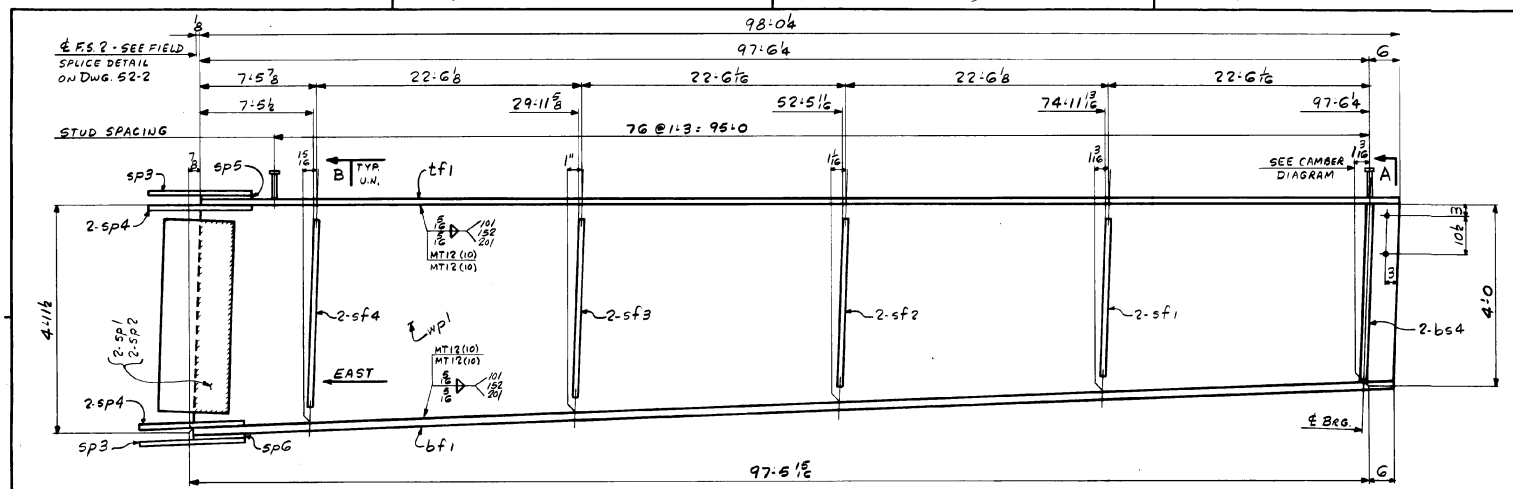

ONE - GIRDER - G2C } ALIKE UNTIL REAMED
ONE - GIRDER - G3C

FOR GIRDER STANDARD DETAILS SEE DWG. 52-2
FOR WEB & CUTTING SK. & FLG. & ASSY SEE DWG. 52-1
FOR SHOP ASSEMBLY DIAGRAM SEE DWG. 52-1

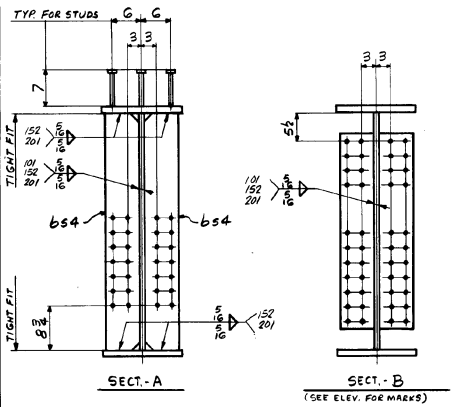

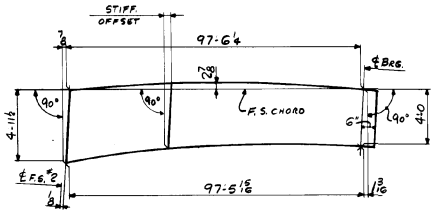

CAMBER DIAGRAM

104

ALL CONNECTIONS DETAILED ON THIS DRAWING REPRESENT BANCROFT & MARTIN INC. STANDARDS. IN APPROVING THIS DRAWING FOR FABRICATION, THE ARCHITECT AND/OR ENGINEER ASSUMES THE RESPONSIBILITY FOR THE STRUCTURAL INTEGRITY OF ALL CONNECTIONS SHOWN.

SHIP MARK	NO.	MARK	BILL OF MATERIAL SHAPE	LENGTH	WT.	ITEM NO.	REMARKS
G2C	1		GIRDER				
G3C	1		GIRDER				
	2	wp1	PL 5/8 x G2 3/8	98 1/8	22404	2/A	CVN
	2	tf1	PL 7/8 x 16	98 0 4	9339	2/E	
	2	bf1	PL 1 3/8 x 16	97 11 5/16	14672	2/D	CVN
	4	bs4	PL 7/8 x 7 1/2	4 0	357	3/J	3/ FEE
	4	sf1	PL 3/4 x 7 1/2	3 6 5/8	*	3/L	
	4	sf2	PL 3/4 x 7 1/2	3 9 1/4	*	3/M	
	4	sf3	PL 3/4 x 7 1/2	4 0	*	3/N	
	4	sf4	PL 3/4 x 7 1/2	4 2 5/8	*	3/O	
	4	sp1	PL 5/8 x 54 1/2	1 7 1/2	*	3/B	CVN
	4	sp2	PL 1/2 x 9 5/8	4 6 1/2	*	3/C	AG006(4)
	4	sp3	PL 3/8 x 16	2 4	*	3/D	CVN
	8	sp4	PL 3/8 x 7	2 4	*	3/B	CVN
	2	sp5	PL 3/8 x 16	1 1 3/8	*	3/F	
	2	spG	PL 3/8 x 16	1 1 3/8	*	3/G	
	462		7/8 SHEAR STUD	0 7	GN	3/T	A108 AUTO END WELD
			TOTAL WGT. = 48907				
			* PAY WEIGHT				
	4	sf1	PL 1/2 x 7 1/2	3 6 3/8	181		
	4	sf2	"	3 9 1/4	192		
	4	sf3	"	4 0	204		
	4	sf4	"	4 2 5/8	215		
	4	sp1	PL 1/2 x 54	1 6 2	567		
	4	sp2	PL 1/16 x 9 1/2	4 6	35		
	4	sp3	PL 3/8 x 16	2 3 1/2	312		
	8	sp4	PL 3/8 x 7	2 3 1/2	273		
	2	sp5	PL 3/8 x 16	1 1 1/2	109		
	2	spG	PL 3/8 x 16	1 1 1/2	47		

IT. NO. 506.91 | BR. NO. B-9 | PROJ. NO. BRS 0238(2)

FOR APPROVAL | **FOR FILES & FIELD**

STEEL: ASTM. A36 | A572 GR1 | A588 [GR] | Unless Noted
WELDING ELECTRODE: E70 | Sea Welding Proc. | None
SHOP CONN: Bolted | Welded | None
FIELD CONN: Bolted | Welded | None
HOLES: 13/16 | 15/16 | Unless Noted | None
PAINT: None | Shopcoat | Galv. After Fab. | As Noted
SPECIAL PAINT:
SPECIAL CLEANING: Blast Clean | None | SSPC - SPG

GIRDER - G2C & G3C

APPROVED: 10-27-83
PRINT DIST.
2 10/11/83 APP.
8 10-28-83 FAB.
F&F.

Bancroft & Martin Inc.
South Portland, Maine 04106

JOB: VERMONT RTE TH3 OVER LAKE LAMOILLE MORRISTOWN, VERMONT
CUSTOMER: BECK / BELLUCI
DESIGNER: STATE OF VERMONT - AGENCY OF TRANS.

REV.	CHECKED	DRAWN	ORDER NO.	JOB NO.	REV.	DRAWING NO.	REV.
△	10-3-83 GK	9-28-83 ELC		3-16	△	52-10	

900-08

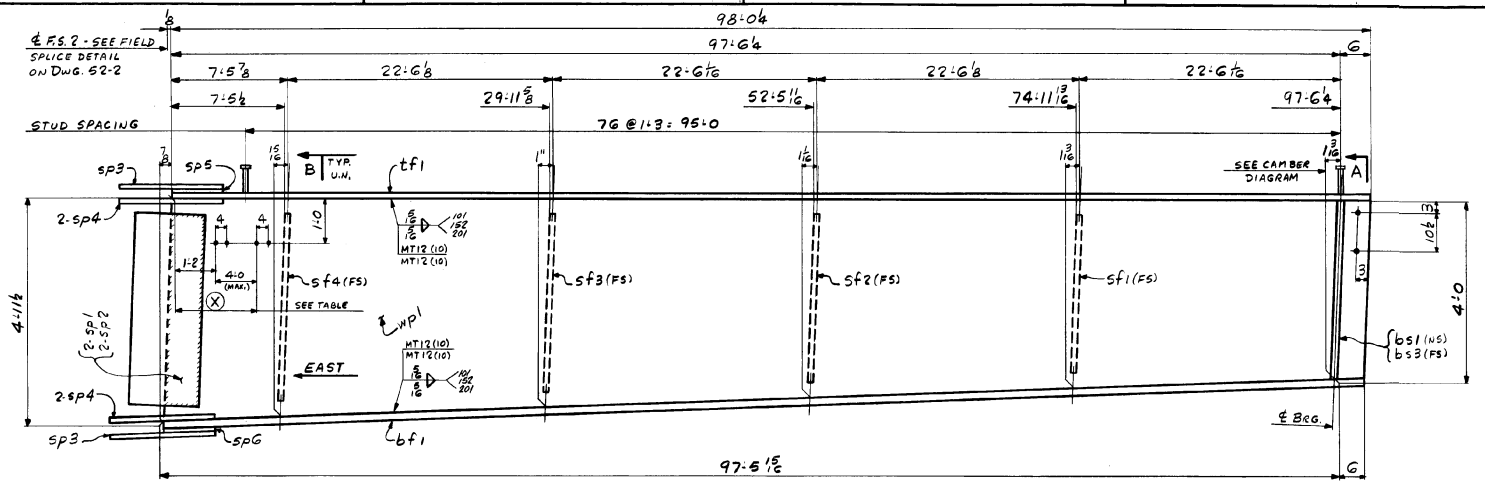

DIM. (X)	DIM. (X)
5:2	53:0
9:0	57:0
13:0	61:0
17:0	65:0
21:0	69:0
25:0	73:0
29:0	77:0
33:0	81:0
37:0	85:0
41:0	89:0
45:0	93:0
49:0	96:8

ONE - GIRDER - G4C

FOR GIRDER STANDARD DETAILS SEE DWG. 52-2
FOR WEB PL CUTTING SK. & FLG. PL ASSY SEE DWG. 52-1
FOR SHOP ASSEMBLY DIAGRAM SEE DWG. 52-1

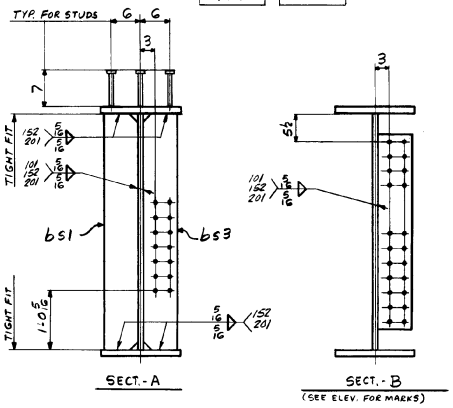

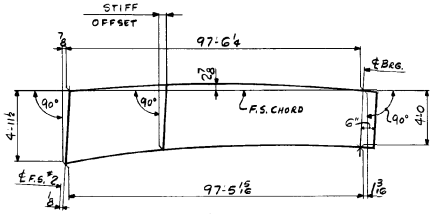

CAMBER DIAGRAM

105

SHIP MARK	NO.	MARK	SHAPE	LENGTH	WT.	ITEM NO.		REMARKS
G4C	1		GIRDER					
	1	wp1	PL 5/8 × G2 3/8	98	1 1/8	11202	3/A	CVN 1@47 = 94.4
	1	tf1	PL 7/8 × 1G	98	0 1/4	4670	3/E	1@98.3
	1	bf1	PL 1 3/8 × 1G	97	11 15/16	7336	3/D	CVN 1@98.3
	1	bs1	PL 3/8 × 7 1/2	4	0	89	3/J	3/F FEE 1@3 1/4 X
	1	bs3	PL 3/8 × 7 1/2	4	0	89	3/J	3/F FEE 13'0
	1	sf1	PL 3/4 × 7 1/2	3	6 5/8	*	3/L	FROM 2/B GRP
	1	sf2	PL 3/4 × 7 1/2	3	9 1/4	*	3/M	3/4 X 8 1/2 X
	1	sf3	PL 3/4 × 7 1/2	4	0	*	3/N	75'3
	1	sf4	PL 3/4 × 7 1/2	4	2 5/8	*	3/O	
	2	sp1	PL 5/8 × 54 1/2	1	7 1/2	*	3/B	CVN FROM @ RIGGY
	2	sp2	PL 1/2 × 9 5/8	4	6 1/2	*	3/C	A606(4) 2'9 X 10
	2	sp3	PL 5/8 × 1G	2	4	*	3/D	CVN FROM @
	4	sp4	PL 5/8 × 7	2	4	*	3/E	3/O CVN ROBY
	1	sp5	PL 3/8 × 1G	1	1 3/8	*	3/F	1@9 1/4 X 13'0
	1	spG	PL 3/8 × 1G	1	1 3/8	*	3/G	FROM 1@9 1/4 X 7'6
	231		7/8 ϕ SHEAR STUD	0	7	3 ~~5~~	3/T	AIOB AUTO 7/8 ϕ END WELD 3 1/2"
					TOTAL WGT =	242	55	
			PAY WEIGHT					
	1	sf1	PL 1/2 X 7 1/2	3	6 5/8	45		
	1	sf2	D.	3	9 1/4	48		
	1	sf3	D.	4	0	51		
	1	sf4	D.	4	2 5/8	54		
	2	sp1	PL 1/2 X 54	1	6 1/2	283		
	2	sp2	PL 1/2 X 9 1/4	4	6	18		
	2	sp3	PL 5/8 X 1G	2	3 1/2	156		
	4	sp4	PL 5/8 X 7	2	3 1/2	136		
	1	sp5	PL 3/8 X 1G	1	1 3/4	55		
	1	spG	PL 3/8 X 1G	1	1 3/4	23		

IT. NO. 506.91 | BR. NO. B-9 | PROJ. NO. BRS 0238(2)

FOR APPROVAL | **FOR FILES & FIELD**

STEEL: ASTM. A36 | A572 GR.[ ] | ☒ A588 GR. | ☒ Unless Noted
WELDING ELECTRODE: E70 | ☒ See Welding Proc. | None
SHOP CONN: Bolted | ☒ Welded | None
FIELD CONN: ☒ Bolted | Welded | None
HOLES: 13/16 | ☒ 15/16 | Unless Noted | None
PAINT: ☒ None | Shopcoat | Galv. After Fab. | As Noted
SPECIAL PAINT:
SPECIAL CLEANING: ☒ Blast Clean | None | SSPC - SPG

GIRDER - G4C

APPROVED: 10-27-83		
PRINT DIST.		
6	10/11/83	APP.
8	10-28-83	FAB.
		F&F.
REV. △		
CHECKED	10-3-83	GK
DRAWN	9-28-83	ELC

Bancroft & Martin Inc
South Portland, Maine 04106

JOB: VERMONT RTE TH3 OVER LAKE LAMOILLE MORRISTOWN, VERMONT
CUSTOMER: BECK / BELLUCI
DESIGNER: STATE OF VERMONT - AGENCY OF TRANS,
ORDER NO. | JOB NO. 3-16 | DRAWING NO. 52-11 | REV. △

ALL CONNECTIONS DETAILED ON THIS DRAWING REPRESENT BANCROFT & MARTIN INC. STANDARDS IN APPROVING THIS DRAWING FOR FABRICATION, THE ARCHITECT AND/OR ENGINEER ASSUMES THE RESPONSIBILITY FOR THE STRUCTURAL INTEGRITY OF ALL CONNECTIONS SHOWN.

900-08

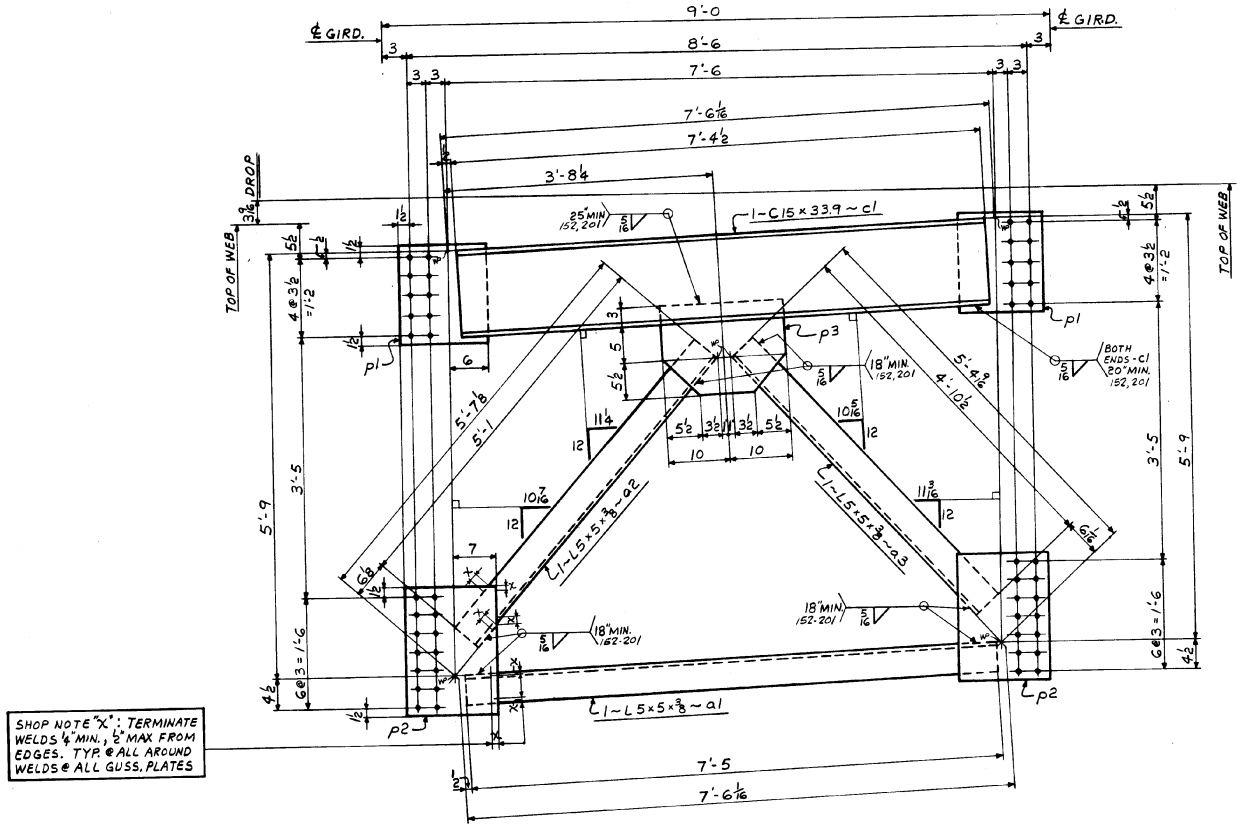

SHOP NOTE "X": TERMINATE WELDS 1/4" MIN., 2" MAX FROM EDGES. TYP. @ ALL AROUND WELDS @ ALL GUSS. PLATES

K1 ONE – PIER CROSSFRAME – MK. F1

SHIP MARK	NO.	MARK	SHAPE	LENGTH	WT.	ITEM NO.	REMARKS
F1	ONE		CROSSFRAME				
	1	c1	C15x33.9	7 4 1/2	250	4/D	1@30°
	1	a1	L5x5x3/8	7 5	91	4/E	
	1	a2	L5x5x3/8	5 1	63	4/F	a2@48°
	1	a3	L5x5x3/8	4 10 1/2	60	4/F	See Cut Length
	2	p1	PL 7/16 x 13 1/2	1 5	57	4/G	Pcs 1@14 x 49
	2	p2	PL 7/16 x 14 1/2	1 9	76	4/H	1@14 x 20 (Cut 4R)
	1	p3	PL 7/16 x 13 1/2	1 8	33	4/I	Pcs 1@14 x 49
				Total Wgt. =	630		

BILL OF MATERIAL — JOB NO. 3-16 — DRAWING NO. 53-1 — REV. △

IT. NO. 506.91 | BR. NO. B-9 | PROJ. NO. BRS 0238(2)

FOR APPROVAL | **FOR FILES & FIELD**

STEEL: ASTM.	A36	A572 [GR]	☒ A588 [GR]	Unless Noted		
WELDING ELECTRODE:	E70	☒ See Welding Proc.	None			
SHOP CONN:	Bolted	☒ Welded	None			
FIELD CONN:	☒ Bolted	Welded	None			
HOLES:	13/16	☒ 15/16		Unless Noted	None	
PAINT:	☒ None	Shopcoat	Galv. After Fab.	As Noted		
SPECIAL PAINT:						
SPECIAL CLEANING:	☒ Blast Clean	None	SSPC - SP6			

PIER CROSSFRAMES

APPROVED: 10-27-83

PRINT DIST.		
6	10/11/83	APP.
8	10-18-83	FAB.
		F&F.

REV. △		
CHECKED	10-3-83	G.K
DRAWN	9-22-83	RLA

Bancroft & Martin Inc.
South Portland, Maine 04106

JOB: VERMONT RTE. TH3 OVER LAKE LAMOILLE MORRISTOWN, VERMONT

CUSTOMER: BECK/BELLUCI

DESIGNER: STATE OF VERMONT - AGENCY OF TRANS.

ORDER NO.	JOB NO.	DRAWING NO.	REV.
	3-16	53-1	△

ALL CONNECTIONS DETAILED ON THIS DRAWING REPRESENT BANCROFT & MARTIN INC. STANDARDS. IN APPROVING THIS DRAWING FOR FABRICATION, THE ARCHITECT AND/OR ENGINEER ASSUMES THE RESPONSIBILITY FOR THE STRUCTURAL INTEGRITY OF ALL CONNECTIONS SHOWN.

106

900-13

HARLAN F. SPELLER CO. INC. 34105

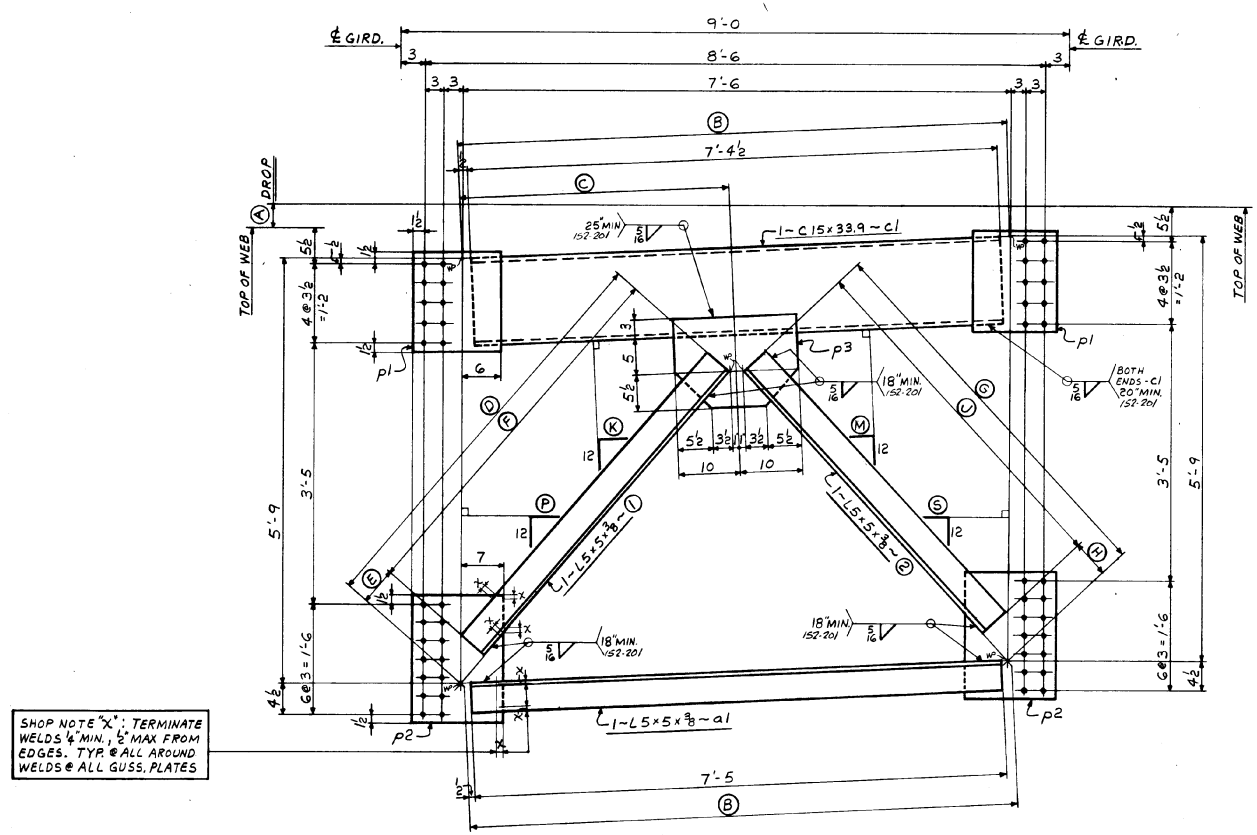

	MARK	Nº REQ'D	Ⓐ	Ⓑ	Ⓒ	Ⓓ	Ⓔ	Ⓕ	Ⓖ	Ⓗ	Ⓙ	Ⓚ	Ⓜ	Ⓟ	Ⓢ	①	②
K2	F2	ONE	0"	7'-6	3'-9	5'-5⅞	5⅞	5'-0	5'-5⅞	5⅞	5'-0	10¾	10¾	10¾	10¾	a2	a2
K3	F3	ONE	3 9/16	7'-6 1/16	3'-8¼	5'-7⅛	6⅛	5'-1	5'-4 9/16	6 1/16	4'-10½	11¼	10 5/16	10 7/16	11 3/16	a3	a4

SHIP	BILL OF MATERIAL	JOB NO. 3-16	DRAWING NO. 53-2	REV. △

MARK	NO.	MARK	SHAPE	LENGTH		WT.	ITEM NO.	REMARKS
F2	ONE		CROSSFRAME					
	1	c1	C15x33.9	7	4½	250	4/D	1@30'0
	1	a1	L5x5x⅜	7	5	91	4/E	20@40'0
	2	a2	L5x5x⅜	5	0	123	4/F	See Cut List
	2	p1	PL 7/16 x 13½	1	5	57	4/G	Res. 1@41x49
	2	p2	PL 7/16 x 14½	1	9	76	4/H	1@96x20'
	1	p3	PL 7/16 x 13½	1	8	33	4/I	Res. 1@41x49
F3	ONE		CROSSFRAME					
	1	c1	C15x33.9	7	4½	250	4/D	1@30'0
	1	a1	L5x5x⅜	7	5	91	4/E	
	1	a3	L5x5x⅜	5	1	63	4/F	20@40'
	1	a4	L5x5x⅜	4	10½	60	4/F	
	2	p1	PL 7/16 x 13½	1	5	57	4/G	Res. 1@41x49
	2	p2	PL 7/16 x 14½	1	9	76	4/H	1@96x20'
	1	p3	PL 7/16 x 13½	1	8	33	4/I	Res. 1@41x49

TOTAL WGT. = 1260

IT. NO. 506.91 | BR. NO. B-9 | PROJ. NO. BRS 0238(2)

FOR APPROVAL | **FOR FILES & FIELD**

STEEL: ASTM. [ ] A36 [ ] A572 GR. [X] A588 GR. [ ] Unless Noted
WELDING ELECTRODE: [ ] E70 [X] See Welding Proc. [ ] None
SHOP CONN: [ ] Bolted [X] Welded [ ] None
FIELD CONN: [X] Bolted [ ] Welded [ ] None
HOLES: [ ] 13/16 [X] 15/16 [ ] Unless Noted [ ] None
PAINT: [X] None [ ] Shopcoat [ ] Galv. After Fab. [ ] As Noted
SPECIAL PAINT:
SPECIAL CLEANING: [X] Blast Clean [ ] None SSPC - SP6

PIER CROSSFRAMES

APPROVED: 10-27-83
PRINT DIST.
6 10/11/83 APP.
8 10-28-83 FAB.
F&F.

Bancroft & Martin Inc.
South Portland, Maine 04106

JOB: VERMONT RTE. TH3 OVER LAKE LAMOILLE MORRISTOWN, VERMONT

CUSTOMER: BECK/BELLUCI

DESIGNER: STATE OF VERMONT - AGENCY OF TRANS.

REV. △			ORDER NO.	JOB NO.	DRAWING NO.	REV.
CHECKED	10-3-83	G.K.		3-16	53-2	△
DRAWN	9-22-83	RLA				

107

ALL CONNECTIONS DETAILED ON THIS DRAWING REPRESENT BANCROFT & MARTIN INC. STANDARDS. IN APPROVING THIS DRAWING FOR FABRICATION, THE ARCHITECT AND/OR ENGINEER ASSUMES THE RESPONSIBILITY FOR THE STRUCTURAL INTEGRITY OF ALL CONNECTIONS SHOWN

HARLAN F. SPILLER CO. INC. 34595

900-13

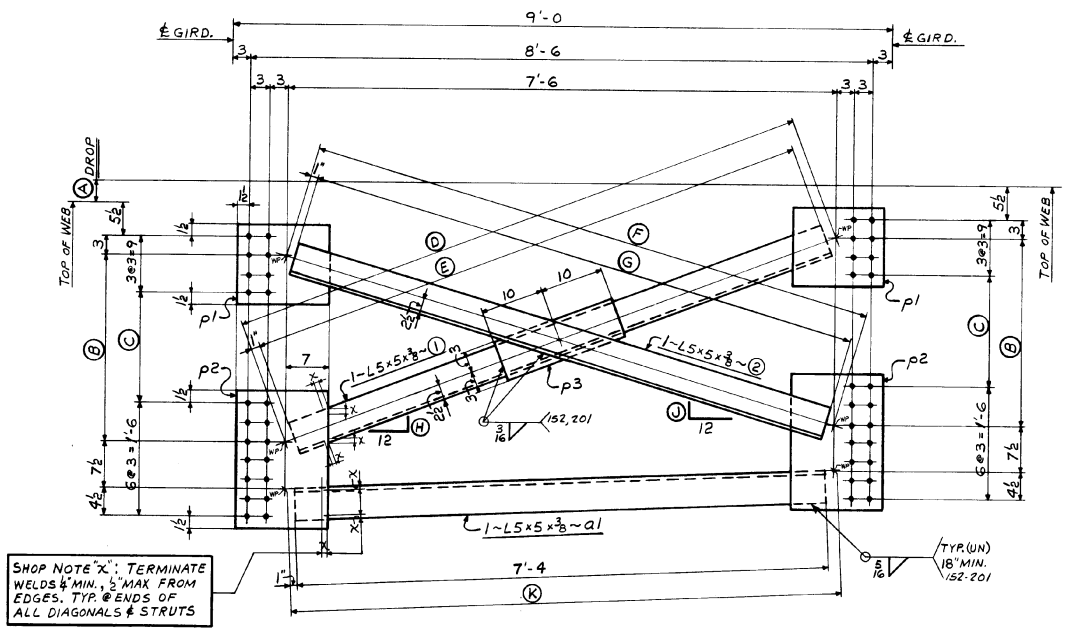

EAST	MARK	No REQ'D	Ⓐ	Ⓑ	Ⓒ	Ⓓ	Ⓔ	Ⓕ	Ⓖ	Ⓗ	Ⓙ	Ⓚ	①	②
X1	F4	2	3 9/16	2'-0 5/8	1'-0 5/8	7'-10 5/16	7'-8 1/4	7'-8 7/16	7'-6 1/4	3 3/4	2 13/16	7'-6 1/16	a2	a3
X4	F5	2	3 9/16	2'-3 1/4	1'-3 1/4	7'-11 1/8	7'-9	7'-9 1/16	7'-7	4 1/8	3 3/16	7'-6 1/16	a4	a5
X2	F6	2	0"	2'-0 5/8	1'-0 5/8	7'-9 5/16	7'-7 1/4	7'-9 5/16	7'-7 1/4	3 5/16	3 5/16	7'-6	a6	a6
X5	F7	2	0"	2'-3 1/4	1'-3 1/4	7'-10 1/16	7'-8	7'-10 1/16	7'-8	3 5/8	3 5/8	7'-6	a7	a7
X8	F8	2	0"	2'-5 15/16	1'-5 15/16	7'-10 3/8	7'-8 3/4	7'-10 3/8	7'-8 3/4	4	4	7'-6	a8	a8

SHIP	BILL OF MATERIAL					JOB NO. 3-16		DRAWING NO. 53-3	REV. △
MARK	NO.	MARK	SHAPE	LENGTH		WT.	ITEM NO.		REMARKS
F4	2		CROSSFRAMES						
	4	p1	PL 7/16 × 12	1	2½	86	4/Q		96 X 15" (LLV 45)
	4	p2	PL 7/16 × 14½	1	9	151	4/R	7/11	1 @ 96 x 20"
	2	p3	PL 7/16 × 6	1	8	30	4/S	7/12	96 X 15"
	2	a1	L5×5×⅜	7	4	180	4/K	7/1	
	2	a2	L5×5×⅜	7	8¼	189	4/L	7/1	240 @ 90°
	2	a3	L5×5×⅜	7	6¼	185	4/L	7/1	See Cut List
F5	2		CROSSFRAMES						
	4	p1	PL 7/16 × 12	1	2½	86	4/Q		96 X 15"
	4	p2	PL 7/16 × 14½	1	9	151	4/R	7/11	Above
	2	p3	PL 7/16 × 6	1	8	30	4/S	7/12	Above
	2	a1	L5×5×⅜	7	4	180	4/K	7/1	
	2	a4	L5×5×⅜	7	9	191	4/M	7/1	Above
	2	a5	L5×5×⅜	7	7	187	4/M	7/1	
F6	2		CROSSFRAMES						
	4	p1	PL 7/16 × 12	1	2½	86	4/Q		96 X 15"
	4	p2	PL 7/16 × 14½	1	9	151	4/R	7/11	Above
	2	p3	PL 7/16 × 6	1	8	30	4/S	7/12	Above
	2	a1	L5×5×⅜	7	4	180	4/K	7/1	
	4	a6	L5×5×⅜	7	7¼	374	4/L	7/1	Above
F7	2		CROSSFRAMES						
	4	p1	PL 7/16 × 12	1	2½	86	4/Q		96 X 15"
	4	p2	PL 7/16 × 14½	1	9	151	4/R	7/11	Above
	2	p3	PL 7/16 × 6	1	8	30	4/S	7/12	Above
	2	a1	L5×5×⅜	7	4	180	4/K	7/1	
	4	a7	L5×5×⅜	7	8	377	4/M	7/1	Above
F8	2		CROSSFRAMES						
	4	p1	PL 7/16 × 12	1	2½	86	4/Q		96 X 15"
	4	p2	PL 7/16 × 14½	1	9	151	4/R	7/11	Above
	2	p3	PL 7/16 × 6	1	8	30	4/S	7/12	Above
	2	a1	L5×5×⅜	7	4	180	4/K	7/1	
	4	a8	L5×5×⅜	7	8¾	380	4/N	7/1	Above
					TOTAL WGT. =	4118			

IT. NO. 506.91 | BR. NO. B-9 | PROJ. NO. BRS 0238(2)

FOR APPROVAL | **FOR FILES & FIELD**

STEEL: ASTM. A36 | A572 [GR] | A588 [GR] | Unless Noted
WELDING ELECTRODE: E70 | See Welding Proc. | None
SHOP CONN: Bolted | Welded | None
FIELD CONN: Bolted | Welded | None
HOLES: 13/16 | 15/16 | Unless Noted | None
PAINT: None | Shopcoat | Galv. After Fab. | As Noted
SPECIAL PAINT:
SPECIAL CLEANING: Blast Clean | None SSPC-SP6

INTERMEDIATE CROSSFRAMES

APPROVED: 10-27-83

PRINT DIST.		
6	10/11/83	APP.
8	10-28-83	FAB.
		F&F.

Bancroft & Martin Inc.
South Portland, Maine 04106

JOB: VERMONT RTE. TH3 OVER LAKE LAMOILLE MORRISTOWN, VERMONT

CUSTOMER: BECK/BELLUCI

DESIGNER: STATE OF VERMONT - AGENCY OF TRANS.

REV. △			ORDER NO.	JOB NO.	DRAWING NO.	REV.
CHECKED	10-3-83	GK		3-16	53-3	△
DRAWN	9-24-83	RLA				

108

ALL CONNECTIONS DETAILED ON THIS DRAWING REPRESENT BANCROFT & MARTIN INC. STANDARDS IN APPROVING THIS DRAWING FOR FABRICATION. THE ARCHITECT AND/OR ENGINEER ASSUMES THE RESPONSIBILITY FOR THE STRUCTURAL INTEGRITY OF ALL CONNECTIONS SHOWN.

900-13

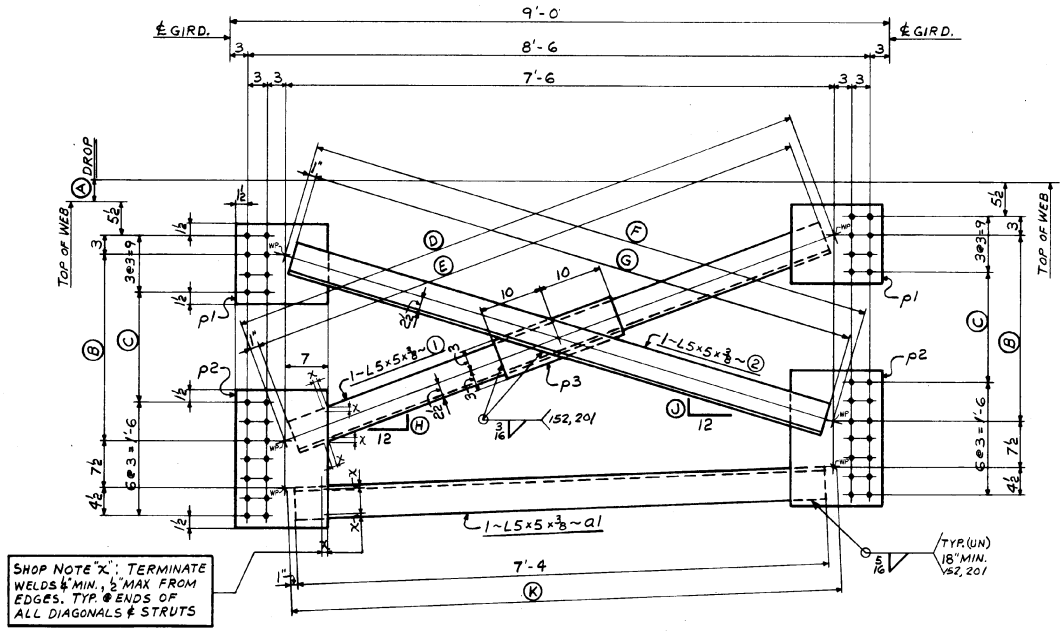

EAST	MARK	No. REQ'D	A	B	C	D	E	F	G	H	J	K	I	2
X7	F9	2	3 9/16	2'-5 15/16	1'-5 15/16	8'-0	7'-10	7'-9 1/8	7'-7 3/4	4 7/16	3 1/2	7'-6 1/16	a2	a3
X10	F10	2	3 9/16	2'-8 9/16	1'-8 9/16	8'-1	7'-11	7'-10 9/16	7'-8 1/2	4 13/16	3 7/8	7'-6 1/16	a4	a5
X13	F11	2	3 9/16	3'-1 3/8	2'-1 3/8	8'-2 7/8	8'-0 3/4	8'-0 1/8	7'-10	5 7/16	4 1/2	7'-6 1/16	a6	a2
X11	F12	2	0"	2'-8 9/16	1'-8 9/16	7'-11 11/16	7'-9 1/2	7'-11 11/16	7'-9 1/2	4 5/16	4 5/16	7'-6	a7	a7
X14	F13	2	0"	3'-1 3/8	2'-1 3/8	8'-1 7/16	7'-11 1/4	8'-1 7/16	7'-11 1/4	5	5	7'-6	a8	a8

SHIP MARK	NO.	MARK	SHAPE	LENGTH		WT.	ITEM NO.	REMARKS
			BILL OF MATERIAL			JOB NO. 3-16		DRAWING NO. 53-4 REV. △
F9	2		CROSSFRAMES					
	4	p1	PL 7/16 × 12	1	2½	86	4/Q	
	4	p2	PL 7/16 × 14½	1	9	151	4/R	
	2	p3	PL 7/16 × 6	1	8	30	4/S	
	2	a1	L5×5×⅜	7	4	180	4/K	
	2	a2	L5×5×⅜	7	10	193	4/N	
	2	a3	L5×5×⅜	7	7¾	188	4/N	
F10	2		CROSSFRAMES					
	4	p1	PL 7/16 × 12	1	2½	86	4/Q	
	4	p2	PL 7/16 × 14½	1	9	151	4/R	
	2	p3	PL 7/16 × 6	1	8	30	4/S	
	2	a1	L5×5×⅜	7	4	180	4/K	
	2	a4	L5×5×⅜	7	11	195	4/O	
	2	a5	L5×5×⅜	7	8½	190	4/O	
F11	2		CROSSFRAMES					
	4	p1	PL 7/16 × 12	1	2½	86	4/Q	
	4	p2	PL 7/16 × 14½	1	9	151	4/R	
	2	p3	PL 7/16 × 6	1	8	30	4/S	
	2	a1	L5×5×⅜	7	4	180	4/K	
	2	a2	L5×5×⅜	7	10	193	4/P	
	2	a6	L5×5×⅜	8	0¾	198	4/P	
F12	2		CROSSFRAMES					
	4	p1	PL 7/16 × 12	1	2½	86	4/Q	
	4	p2	PL 7/16 × 14½	1	9	151	4/R	
	2	p3	PL 7/16 × 6	1	8	30	4/S	
	2	a1	L5×5×⅜	7	4	180	4/K	
	4	a7	L5×5×⅜	7	9½	383	4/O	
F13	2		CROSSFRAMES					
	4	p1	PL 7/16 × 12	1	2½	86	4/Q	
	4	p2	PL 7/16 × 14½	1	9	151	4/R	
	2	p3	PL 7/16 × 6	1	8	30	4/S	
	2	a1	L5×5×⅜	7	4	180	4/K	
	4	a8	L5×5×⅜	7	11¼	391	4/P	
			TOTAL WGT. = 4106					

IT. NO. 506.91 | BR. NO. B-9 | PROJ. NO. BRS 0238(2)

FOR APPROVAL | **FOR FILES & FIELD**

STEEL: ASTM. [ ] A36 [ ] A572 GR. [X] A588 GR. [ ] Unless Noted [ ]
WELDING ELECTRODE: [ ] E70 [X] See Welding Proc. [ ] None [ ]
SHOP CONN: [ ] Bolted [X] Welded [ ] None
FIELD CONN: [X] Bolted [ ] Welded [ ] None
HOLES: [ ] 13/16 [X] 15/16 [ ] [ ] Unless Noted [ ] None
PAINT: [X] None [ ] Shopcoat [ ] Galv. After Fab. [ ] As Noted
SPECIAL PAINT:
SPECIAL CLEANING: [X] Blast Clean [ ] None SSPC-SP6

INTERMEDIATE CROSSFRAMES

APPROVED: 10-27-83
PRINT DIST.
C 10/11/83 APP.
B 10/28/83 FAB.
F&F.

Bancroft & Martin Inc.
South Portland, Maine 04106

JOB: VERMONT RTE. TH3 OVER LAKE LAMOILLE MORRISTOWN, VERMONT
CUSTOMER: BECK/BELLUCI
DESIGNER: STATE OF VERMONT - AGENCY OF TRANS.

REV. △	CHECKED 10-3-83 GK	ORDER NO.	JOB NO.	DRAWING NO.	REV.
	DRAWN 9-24-83 RLA		3-16	53-4	△

ALL CONNECTIONS DETAILED ON THIS DRAWING REPRESENT BANCROFT & MARTIN INC. STANDARDS. IN APPROVING THIS DRAWING FOR FABRICATION, THE ARCHITECT AND/OR ENGINEER ASSUMES THE RESPONSIBILITY FOR THE STRUCTURAL INTEGRITY OF ALL CONNECTIONS SHOWN.

109

900-13

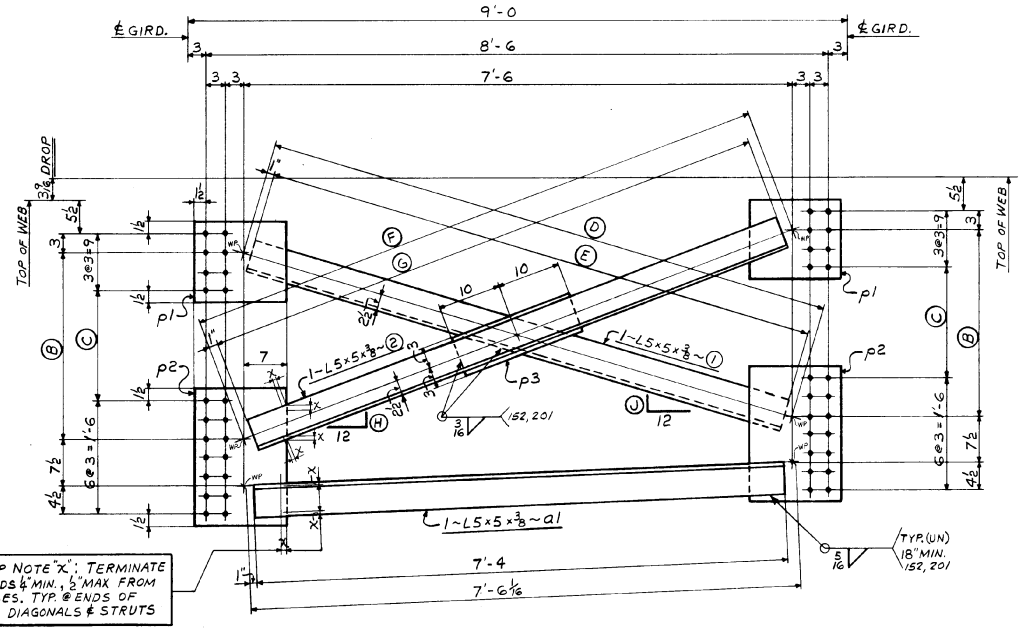

NEST	MARK	NO REQ'D	Ⓑ	Ⓒ	Ⓓ	Ⓔ	Ⓕ	Ⓖ	Ⓗ	Ⓙ	①	②
X3	F14	2	2'-0 5/8	1'-0 5/8	7'-8 1/16	7'-6 1/4	7'-10 5/16	7'-8 1/4	3 3/4	2 1/16	a2	a3
X6	F15	2	2'-3 1/4	1'-3 1/4	7'-9 1/16	7'-7	7'-11 1/8	7'-9	4 1/8	3 3/16	a4	a5
X9	F16	2	2'-5 15/16	1'-5 15/16	7'-9 13/16	7'-7 3/4	8'-0	7'-10	4 7/16	3 1/2	a6	a7
X12	F17	2	2'-8 9/16	1'-8 1/16	7'-10 9/16	7'-8 1/2	8'-1	7'-11	4 13/16	3 7/8	a8	a9
X15	F18	2	3'-1 3/8	2'-1 3/8	8'-0 5/8	7'-10	8'-2 3/8	8'-0 3/4	5 7/16	4 1/2	a7	a10

OPP HAND
AS SHOWN

SHIP MARK	NO.	MARK	SHAPE	LENGTH		WT.	ITEM NO.	REMARKS
F14	2		CROSSFRAMES					
	4	p1	PL 7/16 × 12	1	2 1/2	86	4/Q	
	4	p2	PL 7/16 × 14 1/2	1	9	151	4/R	
	2	p3	PL 7/16 × 6	1	8	30	4/S	
	2	a1	L5×5×3/8	7	4	180	4/K	
	2	a2	L5×5×3/8	7	6 1/4	185	4/L	
	2	a3	L5×5×3/8	7	8 1/4	189	4/L	
F15	2		CROSSFRAMES					
	4	p1	PL 7/16 × 12	1	2 1/2	86	4/Q	
	4	p2	PL 7/16 × 14 1/2	1	9	151	4/R	
	2	p3	PL 7/16 × 6	1	8	30	4/S	
	2	a1	L5×5×3/8	7	4	180	4/K	
	2	a4	L5×5×3/8	7	7	187	4/M	
	2	a5	L5×5×3/8	7	9	191	4/M	
F16	2		CROSSFRAMES					
	4	p1	PL 7/16 × 12	1	2 1/2	86	4/Q	
	4	p2	PL 7/16 × 14 1/2	1	9	151	4/R	
	2	p3	PL 7/16 × 6	1	8	30	4/S	
	2	a1	L5×5×3/8	7	4	180	4/K	
	2	a6	L5×5×3/8	7	7 3/4	188	4/N	
	2	a7	L5×5×3/8	7	10	193	4/N	
F17	2		CROSSFRAMES					
	4	p1	PL 7/16 × 12	1	2 1/2	86	4/Q	
	4	p2	PL 7/16 × 14 1/2	1	9	151	4/R	
	2	p3	PL 7/16 × 6	1	8	30	4/S	
	2	a1	L5×5×3/8	7	4	180	4/K	
	2	a8	L5×5×3/8	7	8 1/2	190	4/O	
	2	a9	L5×5×3/8	7	11	195	4/O	
F18	2		CROSSFRAMES					
	4	p1	PL 7/16 × 12	1	2 1/2	86	4/Q	
	4	p2	PL 7/16 × 14 1/2	1	9	151	4/R	
	2	p3	PL 7/16 × 6	1	8	30	4/S	
	2	a1	L5×5×3/8	7	4	180	4/K	
	2	a7	L5×5×3/8	7	10	193	4/P	
	2	a10	L5×5×3/8	8	0 3/4	198	4/P	
			TOTAL WGT. = 4144					

BILL OF MATERIAL — JOB NO. 3-16 — DRAWING NO. 53-5 — REV. 1

IT. NO. 506.91 — BR. NO. B-9 — PROJ. NO. BRS 0238(2)

FOR APPROVAL | **FOR FILES & FIELD**

STEEL: ASTM. A36 | A572 GR | ☒ A588 GR | Unless Noted
WELDING ELECTRODE: E70 | ☒ See Welding Proc. | None
SHOP CONN: Bolted | ☒ Welded | None
FIELD CONN: ☒ Bolted | Welded | None
HOLES: 13/16 | ☒ 15/16 | Unless Noted | None
PAINT: ☒ None | Shopcoat | Galv. After Fab | As Noted
SPECIAL PAINT:
SPECIAL CLEANING: ☒ Blast Clean | None | SSPC-SP6

INTERMEDIATE CROSSFRAMES

APPROVED: 10-27-83			
PRINT DIST.			
6	10/11/83	APP.	
8	10-28-83	FAB.	
		F&F.	
6	12-15-83	APP	
8	12-15-83	FAB.	
REV. 1	12-15-83	JCM	
CHECKED	10-3-83	G.K.	
DRAWN	9-23-83	RLA	

Bancroft & Martin Inc
South Portland, Maine 04106

JOB: VERMONT RTE. 7H3 OVER LAKE LAMOILLE MORRISTOWN, VERMONT

CUSTOMER: BECK/BELLUCI

DESIGNER: STATE OF VERMONT - AGENCY OF TRANS.

ORDER NO. | JOB NO. 3-16 | DRAWING NO. 53-5 | REV. 1

110

ALL CONNECTIONS DETAILED ON THIS DRAWING REPRESENT BANCROFT & MARTIN INC. STANDARDS IN APPROVING THIS DRAWING FOR FABRICATION, THE ARCHITECT AND/OR ENGINEER ASSUMES THE RESPONSIBILITY FOR THE STRUCTURAL INTEGRITY OF ALL CONNECTIONS SHOWN.

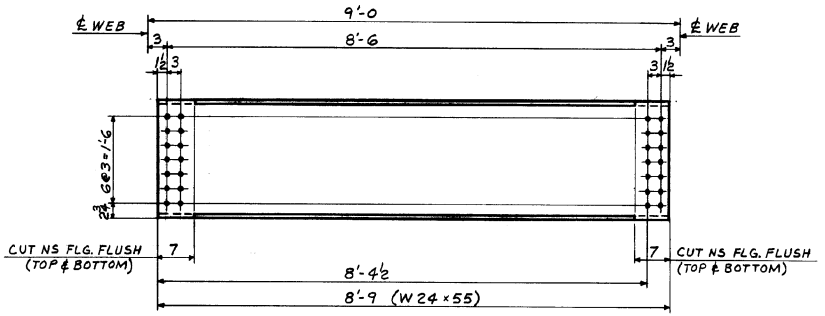

6 - END DIAPHRAGMS ~ MK. D1

SHIP MARK	NO.	MARK	SHAPE	LENGTH		WT.	ITEM NO.	REMARKS
			END DIAPHRAGMS					
D1	6		W24×55	8	9	2888	506.91	

BILL OF MATERIAL — JOB NO. 3-16 — DRAWING NO. 56-1 — REV. △

IT. NO. 506.91 | BR. NO. B-9 | PROJ. NO. BRS 0238(2)

FOR APPROVAL | **FOR FILES & FIELD**

STEEL: ASTM. [ ] A36 [ ] A572 GR.1 [X] A588 GR. [ ] Unless Noted
WELDING ELECTRODE: [ ] E70 [ ] See Welding Proc. [X] None
SHOP CONN: [ ] Bolted [ ] Welded [X] None
FIELD CONN: [X] Bolted [ ] Welded [ ] None
HOLES: [ ] 13/16 [X] 15/16 [ ] [ ] Unless Noted [ ] None
PAINT: [X] None [ ] Shopcoat [ ] Galv. After Fab. [ ] As Noted
SPECIAL PAINT:
SPECIAL CLEANING: [X] Blast Clean [ ] None SSPC - SP6

DIAPHRAGMS

	PRINT DIST.	
APPROVED: 10-27-83		
G	10/11/83	APP.
B	10-28-83	FAB.
		F&F.
REV. △		
CHECKED	10-3-83	GK
DRAWN	9-21-83	RLA

Bancroft & Martin Inc.
South Portland, Maine 04106

JOB: VERMONT RTE. TH3 OVER LAKE LAMOILLE MORRISTOWN, VERMONT

CUSTOMER: BECK/BELLUCI

DESIGNER: STATE OF VERMONT-AGENCY OF TRANS.

ORDER NO.	JOB NO.	DRAWING NO.	REV.
	3-16	56-1	△

ALL CONNECTIONS DETAILED ON THIS DRAWING REPRESENT BANCROFT & MARTIN INC. STANDARDS. IN APPROVING THIS DRAWING FOR FABRICATION, THE ARCHITECT AND/OR ENGINEER ASSUMES THE RESPONSIBILITY FOR THE STRUCTURAL INTEGRITY OF ALL CONNECTIONS SHOWN.

111

900-12

HARLAN F. SPILLER CO. INC. 34595

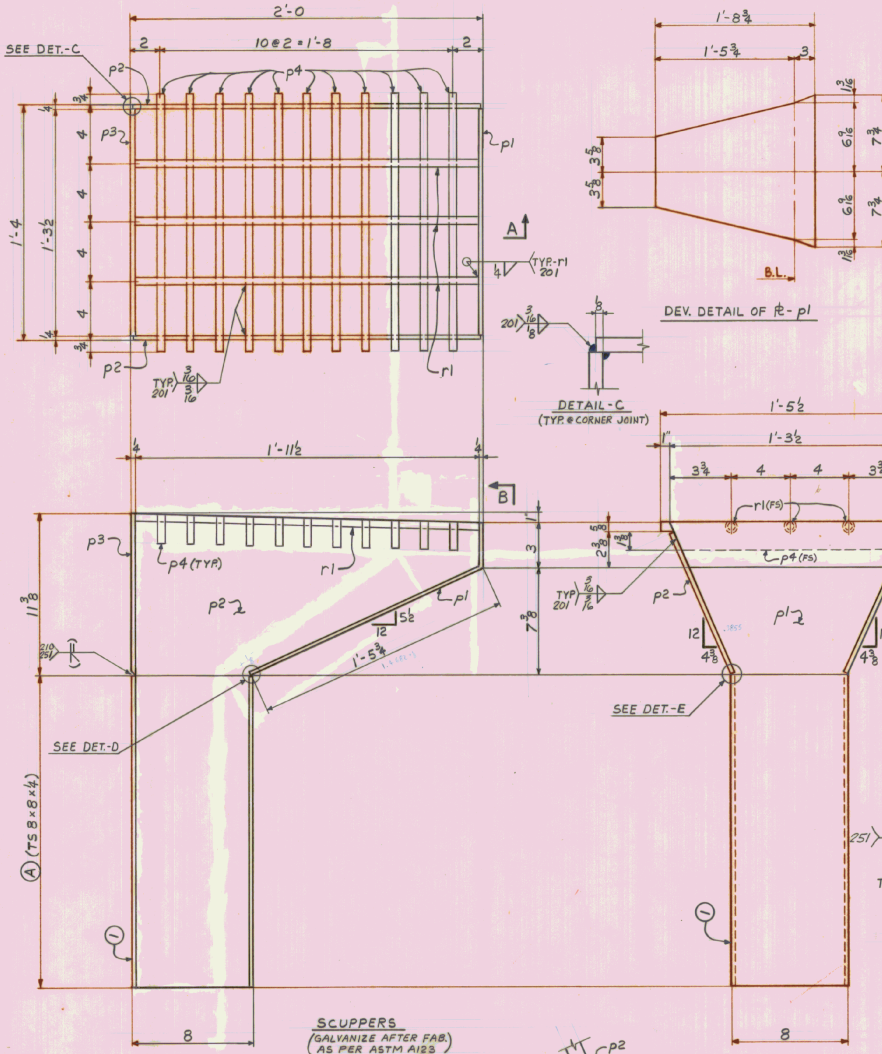

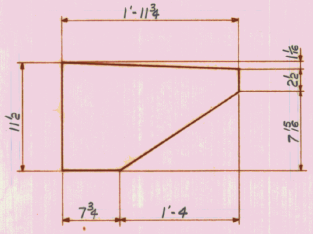

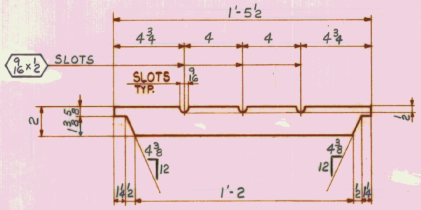

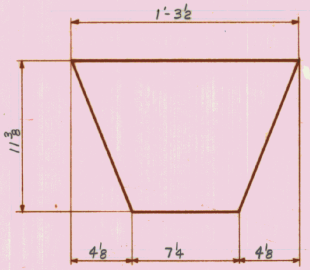

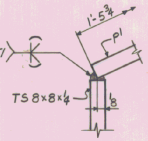

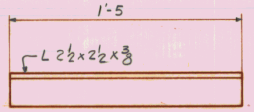

8 - SCUPPER SUPPORTS - MK. DR5
(GALVANIZE AFTER FABRICATION AS PER ASTM A123)

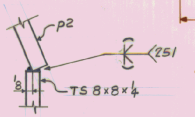

SCUPPERS
(GALVANIZE AFTER FAB.)
AS PER ASTM A123

MARK	NO REQ'D	(A)	(1)
DR1	2	5'-5	m1
DR2	2	6'-1	m2
DR3	2	7'-4	m3
DR4	2	5'-11	m4

NOTE:
ALL EXTERIOR WELDS TO BE GROUND SMOOTH.

ALL CONNECTIONS DETAILED ON THIS DRAWING REPRESENT BANCROFT & MARTIN INC. STANDARDS. IN APPROVING THIS DRAWING FOR FABRICATION, THE ARCHITECT AND/OR ENGINEER ASSUMES THE RESPONSIBILITY FOR THE STRUCTURAL INTEGRITY OF ALL CONNECTIONS SHOWN.

112

HARLAN F. SPILLER CO. INC.

SHIP | BILL OF MATERIAL | JOB NO. 3-16 | DRAWING NO. 59-1 | REV. △

MARK	NO.	MARK	SHAPE	LENGTH		WT.	ITEM NO.		REMARKS
DR1	2		SCUPPERS						
DR2	2								
DR3	2								
DR4	2								
	2	m1	TS 8×8×¼	5	5	280	5/8	DR1	ASTM A500 (OR A501)
	2	m2		6	1	314	5/6	DR2	
	2	m3		7	4	379	5/6	DR3	
	2	m4		5	11	306	5/6	DR4	
	8	p1	PL ¼×15½	1	8¾	182	6/8	BENT	
	16	p2	PL ¼×11¾	1	11¾	310	6/6		
	8	p3	PL ¼×11⅜	1	3½	100	6/6		
	88	p4	BAR 2×½	1	5½	437	5/6		
	24	r1	ROD ½"ϕ	1	11½	31	5/6		
DR5	8		L 2½×2½×⅜	1	5	*	5/1		

* PAY WEIGHT

DR5	8		L 2×2×⅜	1	5	44

TOTAL WGT. = 2383

IT. NO. 506.91 | BR. NO. B-9 | PROJ. NO. BRS 0238(2)

FOR APPROVAL | **FOR FILES & FIELD**

STEEL: ASTM. [X] A36 [ ] A572 GR1 [ ] A588 GR1 [X] Unless Noted
WELDING ELECTRODE: [ ] E70 [X] See Welding Proc. [ ] None
SHOP CONN: [ ] Bolted [X] Welded [ ] None
FIELD CONN: [ ] Bolted [X] Welded [ ] None
HOLES: [ ] 13/16 [ ] 15/16 [ ] [ ] Unless Noted [X] None
PAINT: [X] None [ ] Shopcoat [ ] Galv. After Fab. [ ] As Noted
SPECIAL PAINT: NONE
SPECIAL CLEANING: [ ] Blast Clean [X] None

SCUPPERS

APPROVED: 10-27-83
PRINT DIST.
Gp 10/11/83 APP.
B 10-28-83 FAB.
F&F.
Gp 10/19/83 APP.

REV. △
CHECKED 10-7-83 GK
DRAWN 10-7-83 RLA

Bancroft & Martin Inc.
South Portland, Maine 04106

JOB: VERMONT RTE. TH3 OVER LAKE LAMOILLE MORRISTOWN, VERMONT
CUSTOMER: BECK / BELLUCI
DESIGNER: STATE OF VERMONT - AGENCY OF TRANS.
ORDER NO. | JOB NO. 3-16 | DRAWING NO. 59-1 | REV. △

900-18

INDEX OF SHEETS

1	TITLE SHEET
2	TYPICAL SHEET
3	ITEM DETAIL AND DRAINAGE SHEET
4	EARTHWORKS AND GRADE SHEET
5-8	LAYOUT AND PROFILE SHEETS
9-10	BR 100 SHEETS
11-24	CROSS SECTIONS
25-32	CHANNEL SECTIONS

STATE OF VERMONT
AGENCY OF TRANSPORTATION

PROPOSED IMPROVEMENT
TOWN OF MORRISTOWN
COUNTY OF LAMOILLE
ROUTE NO.-TH 3, CL. II BRIDGE NO.-9

BEGINNING AT A POINT APPROXIMATELY 0.436 MILES SOUTHEASTERLY OF THE INTERSECTION OF TH2 WITH TH3 AND PROCEEDING NORTHWESTERLY ALONG TH3 FOR 0.322 MILES.

LENGTH OF ROADWAY	1926	FEET=	0.276 MILES
LENGTH OF BRIDGE	274	FEET=	0.052 MILES
LENGTH OF PROJECT	1700.00	FEET=	0.322 MILES
LENGTH OF R.O.W. PROJ.	1862.1	FEET=	0.353 MILES

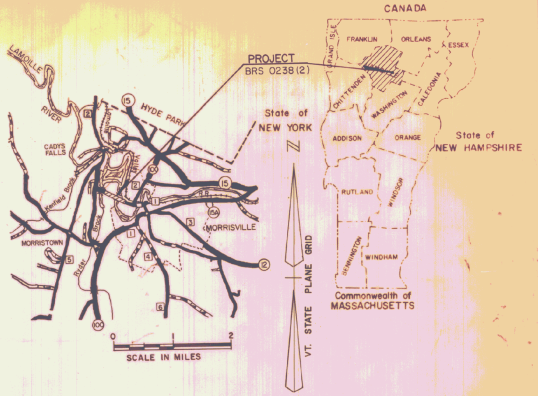

R.O.W. PLANS

TRAFFIC DATA
EST. 1978 ADT = 490
EST. 1998 ADT = 700
EST. 1998 DHV = 125
D = 56 %
T = 5 %
V = 30 MPH



CONVENTIONAL SIGNS

COUNTY LINE
TOWN LINE
LIMITS OF ACCESS
POINT OF ACCESS
FENCE LINE
STONE WALL
TRAVELED WAY
GUARD RAIL
RAILROAD
SURVEY LINE
CULVERT
POWER POLE
TELEPHONE POLE
TREES
CONTROL OF ACCESS
PROPERTY LINE
R.O.W. TAKING LINE
SLOPE RIGHTS
TOP OF CUT
TOE OF SLOPE

DATUM
VERTICAL NGVD 1929
HORIZONTAL N/A

These plans are subject to such engineering changes as may be required by the Federal Highway Administration, or the Director of Engineering and Construction.

Construction is to be carried on in accordance with these plans and the Standard Specifications for Highway and Bridge Construction, dated March, 1976, as approved by the Federal Highway Administration on October 27, 1976 for use on this project, including all subsequent revisions and such revised specifications and special provisions as are incorporated in these plans.

APPROVED W. R. Lewis
CHIEF, PROPERTY ADMINISTRATION
DATE 5-5-82

113

SUBMITTED BY ORDER OF THE STATE TRANSPORTATION BOARD
APPROVED S. J. Gage, P.E. DATE MAY 5 1982
Director of Engineering and Construction

DEPARTMENT OF TRANSPORTATION
FEDERAL HIGHWAY ADMINISTRATION
APPROVED _____ DATE _____
DIVISION ADMINISTRATOR

PROJECT BRS No 0238(2)
SHEET 1 OF 7 SHEETS

TYPICAL SECTIONS

	18"	SUB BASE OF GRAVEL, ITEM 301.15
	3"	PLANT MIXED BASE COURSE, ITEM 303.25
	1½"	BITUMINOUS CONCRETE PAVEMENT, ITEM 406.25
SHOULDERS	1½"	BITUMINOUS CONCRETE PAVEMENT, ITEM 406.25

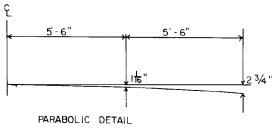

PARABOLIC DETAIL

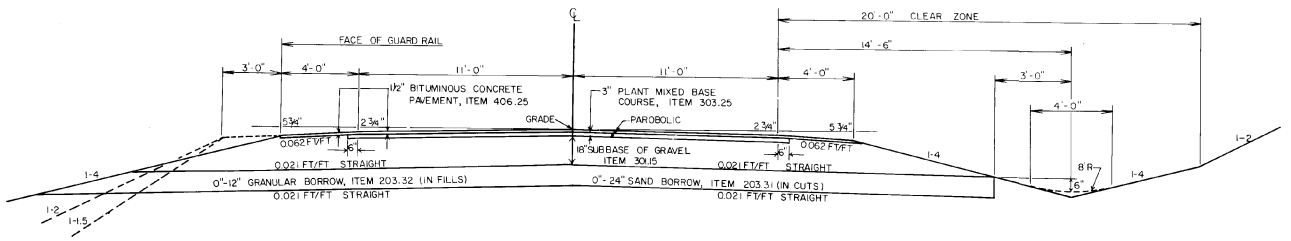

NORMAL SECTION

PLACEMENT OF 0"-12" OF GRANULAR BORROW, ITEM 203.32 IN FILLS AND OF 0"-24" OF SAND BORROW, ITEM 203.31 IN CUTS TO BE AS SHOWN ON PLANS OR AS DIRECTED BY THE ENGINEER.

GENERAL NOTES

SEED, ITEM 651.10 - TO BE APPLIED AS DIRECTED BY THE ENGINEER

% WT	LBS/A	NAME	PUR %	GERM %
3.33	2	CROWN VETCH	97	75
50.00	30	CREEPING RED FESCUE	98	85
8.33	5	TIMOTHY	99	85
16.67	10	PERENNIAL RYE GRASS (VAR. PENNFINE)	95	85
8.34	5	ALFALFA (VAR. SARANAC)	99	85
8.33	5	BIRDSFOOT TREFOIL (VAR. EMPIRE)	98	85
5.00	3	HIGHLAND BENT GRASS	92	85
100.00	60	LBS/ACRE		

MARKER POSTS, (WOOD OR STEEL AS SPECIFIED) TO BE PLACED AS DIRECTED BY THE ENGINEER.

FERTILIZER, ITEM 651.15 FORMULA 10-20-10 TO BE USED WITH SEED AT THE RATE OF 500 LBS/ACRE

AGRICULTURAL LIMESTONE, ITEM 651.20 TO BE APPLIED AT THE RATE OF 2 TONS/ACRE.

HAY MULCH, ITEM 651.25 TO BE PLACED ON ALL EARTH SLOPES AT THE RATE OF 2 TONS/ACRE.

TOPSOIL, ITEM 653.10 TO BE USED WITH SEED IN RESIDENTIAL AREAS AS DIRECTED BY THE ENGINEER

SEE STANDARD SHEET B-5 FOR TYPICAL SLOPE ROUNDING

SEE STANDARD SHEET D-2 FOR PAY LIMITS OF SAND BORROW WHEN USED IN CONJUNCTION WITH UNDERDRAIN.

ALLOWABLE THICKNESS TOLERANCES
SUB BASE OF GRAVEL ±1"
BITUMINOUS CONCRETE PAVEMENT ±1/4"
PLANT MIXED BASE COURSE ± 1/2"
OR AS DIRECTED BY THE ENGINEER

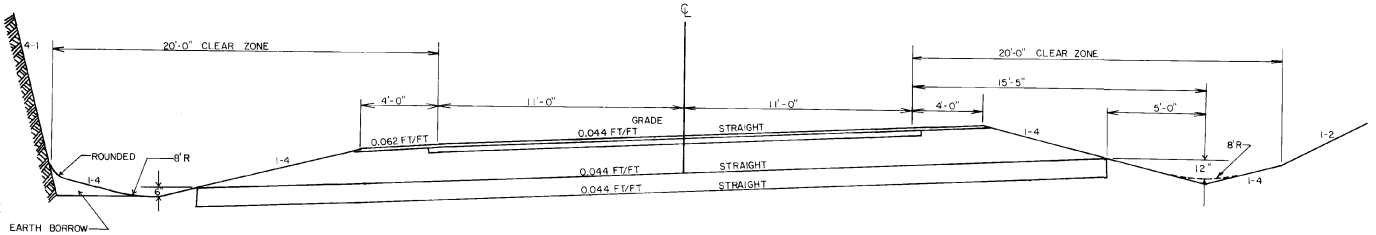

MAXIMUM BANKED SECTION 0.044 FT/FT

FOR FURTHER INFORMATION ON LEDGE TREATMENT SEE STANDARD A-60

SEE STANDARD A-35

1114

MORRISTOWN
BRS 0238(2)

STATE OF VERMONT
AGENCY OF TRANSPORTATION
RIGHT-OF-WAY PLANS
DETAIL SHEET

TABLE OF PROJECT PROPERTY ACQUISITION

PARCEL NO.	GRANTOR	SHEET NO.	BEGINNING STATION	ENDING STATION	TAKING	REM.	RIGHTS	TITLE TAKEN	DATE	TOWN OR CITY RECORDED	BK.	PG.	REMARKS
1	PARKER, REGINALD G. & MARION N. PARKER, JUNE HELEN	5	REV. 116+60 RT. REV. 117+00 RT. REV. 117+15 RT.	REV. 117+50 RT. REV. 117+55 RT. REV. 117+52 RT.	0.01 A±		CONST. EASE. (T) (0.01 A±) SLOPE (T) (240 S.F.±)	W.D.	1-26-83	MORRISTOWN	78	439-40	240 S.F.± 500 S.F.±
2	VILLAGE OF MORRISVILLE	5	REV. 116+90 LT. REV. 117+10 LT.	REV. 117+33 LT. REV. 117+47 LT.			CONST. EASE. (T) (0.02 A±) SLOPE (T) (0.01 A±)	AGREE.					840 S.F.± 440 S.F.±
3A	VILLAGE OF MORRISVILLE, WATER & LIGHT DEPT.	5	REV. 117+22 LT. REV. 117+33 LT. REV. 120+50 LT.	REV. 122+30 LT. REV. 117+82 LT. REV. 122+20 LT.			CONST. EASE. (T) (0.17 A±) SLOPE (T) (0.03 A±) SLOPE (T) (0.10 A±)	AGREE.					1160 S.F.±
3B			REV. 117+50 RT. REV. 117+52 RT. REV. 120+50 RT.	REV. 117+82 RT. REV. 120+56 RT. REV. 120+38 RT.			SLOPE (T) (390 S.F.±) CONST. EASE. (T) (0.12 A±) SLOPE (T) (200 S.F.±)						
4A	KELLEY, JAMES M. II KELLEY, MAURICE L. JR.	5,6	REV. 120+20 LT. REV. 122+60 LT. REV. 123+20 RT. REV. 126+00 LT. REV. 126+05 LT. REV. 126+07 LT. REV. 128+00 RT. REV. 131+00 RT. REV 131+00 LT. REV. 134+15 LT.	45+00 LT. REV. 124+45 LT. REV. 126+00 RT. REV. 129+68 LT. REV. 127+00 LT. REV. 129+60 RT. 44+85 LT.	4.60 A±	11.00 A±	CONST. EASE. (T) (0.02 A±) CONST. EASE. (T) (0.03 A±) DRIVE (T) CONST. EASE. (T) (0.07 A±) SLOPE (T) (0.04 A±) CONST. EASE. (T) (0.01 A±) DRIVE (T) DRAINAGE (P) CONST. EASE. (T) (0.02 A±)	W.D.	7-12-83	MORRISTOWN	78	540-41	760 S.F.± 1500 S.F.± 2920 S.F.± 1680 S.F.± 450 S.F.± 800 S.F.±
4B		5	REV. 120+20 RT. REV. 120+50 RT.	REV. 121+43 RT. REV. 121+43 RT.	0.05 A±	26.05 A±	CONST. EASE. (T) (0.02 A±)						2100 S.F.± 680 S.F.±
4C		5	REV. 120+20 LT.	REV. 122+25 RT.	0.22 A±		ALL R. T. & I.						TOWN HIGHWAY 3
	PARCEL 4 CONTINUED ON NEXT SHEET												

TABLE OF REVISIONS

REVISION NO.	SHEET NO.	DESCRIPTION OF REVISION	DATE	MADE BY	APPROVED BY
1	3,5,6	Parcel #4 Kelley, Added "II" after James M. Kelley's name per C.O. # 5525	8-31-82	DBM	
2	4	Parcel #4 KELLEY, Changed Total Remainder To 37.05 A± Per C.O. # 5572 Plans submitted to design 2-22-83	10-1-82	BBM	

MADE BY: N.W.J. DATE 5-5-82

CHECKED BY: R.L.S. DATE 5-5-82

DR. RT. — DRAINAGE RIGHT
DIT. RT — DITCHING RIGHT
CH. RT — CHANNEL RIGHT
DRIVE RT. — DRIVE RIGHT
CUL. RT. — CULVERT RIGHT
(D) — DEMOLITION OR REMOVAL
[W] — WATER SOURCES

PRESENT R.O.W.
TAKING WITHOUT ACCESS
TAKING WITHOUT ACCESS ALONG PROPERTY LINES
TAKING WITH ACCESS
(P) PERMANENT EASEMENT
(T) TEMPORARY EASEMENT

LEGEND
CONST. EASE. — CONST. EASEMENT
SR — SR — SLOPE RIGHTS
P/L — P/L — PROPERTY LINE
TOP OF CUT
TOE OF SLOPE

APPROVED James D Patterson DATE 5-6-83
CHIEF OF PLANS & TITLES

115

PROJECT MORRISTOWN
NO. BRS 0238(2)
SHEET 3 OF 7

ROW

BRUNING 44-131-40992

STATE OF VERMONT
AGENCY OF TRANSPORTATION
RIGHT-OF-WAY PLANS
DETAIL SHEET

TABLE OF PROJECT PROPERTY ACQUISITION

PARCEL NO.	GRANTOR	SHEET NO.	BEGINNING STATION	ENDING STATION	TAKING	REM.	RIGHTS	TITLE TAKEN	DATE	TOWN OR CITY RECORDED	BK.	PG.	REMARKS
	PARCEL 4 CONTINUED FROM PREVIOUS SHEET												
4D		6	REV 130+90 RT.	45+00 RT.	0.49 A±		ALL R. T. & I.						TOWN HIGHWAY 3
4E		6	REV. 131+90 RT. REV. 132+65 RT. REV. 132+84 RT.	45+00 RT. 44+45 RT. 44+20 RT.	0.11 A±		CONST. EASE. (T) (0.06 A±) SLOPE (P) (0.14 A±)						2500 S.F.±
				TOTAL	5.47 A±	37.05 A±							
5	VILLAGE OF MORRISVILLE, WATER & LIGHT DEPT.												UTILITY
6	EMCO CATV, INC.												UTILITY
7	NEW ENGLAND TELEPHONE & TELEGRAPH												UTILITY
8	VILLAGE OF MORRISVILLE, SEWER DEPT.												UTILITY

TABLE OF REVISIONS

REVISION NO.	SHEET NO.	DESCRIPTION OF REVISION	DATE	MADE BY	APPROVED BY

MADE BY: N.W.J. DATE 5-5-82

CHECKED BY: R.L.S. DATE 5-5-82

DR. RT. — DRAINAGE RIGHT
DIT. RT. — DITCHING RIGHT
CH. RT. — CHANNEL RIGHT
DRIVE RT. — DRIVE RIGHT
CUL. RT. — CULVERT RIGHT
(D) — DEMOLITION OR REMOVAL
[W] — WATER SOURCES

LEGEND

PRESENT R.O.W.
TAKING WITHOUT ACCESS
TAKING WITHOUT ACCESS ALONG PROPERTY LINES
TAKING WITH ACCESS
(P) PERMANENT EASEMENT
(T) TEMPORARY EASEMENT
CONST. EASE. CONS'T. EASEMENT
SR SR SLOPE RIGHTS
P/L P/L PROPERTY LINE
TOP OF CUT
TOE OF SLOPE

APPROVED James D. Patterson for CHIEF OF PLANS & TITLES DATE 5-5-82

116

PROJECT MORRISTOWN
NO. BRS 0238(2)
SHEET 4 OF 7

ROW

BRUNING 44-131 40592

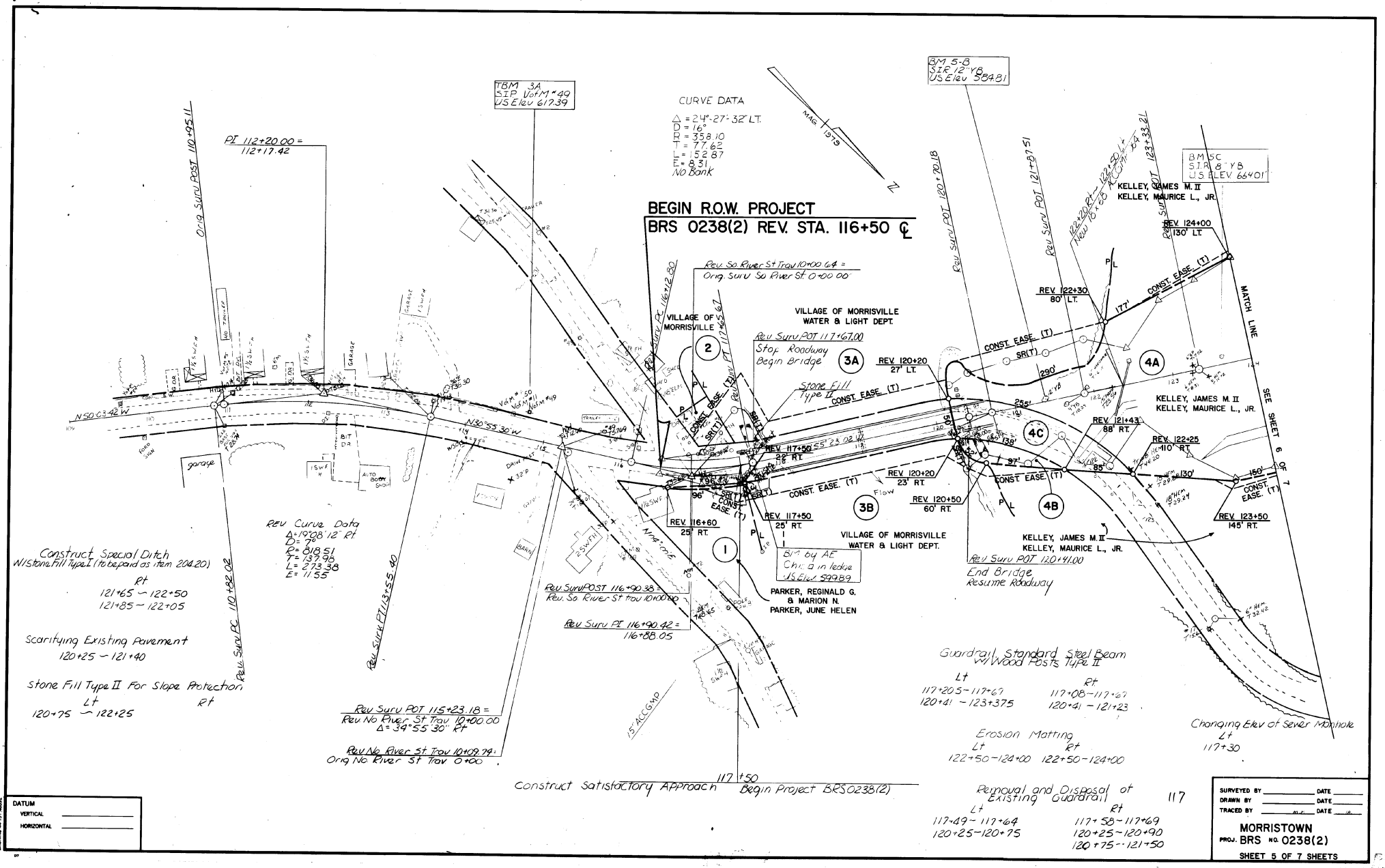
TBM 3A
S.I.P. Vol M-49
USElev 617.39
CURVE DATA
Δ = 24°-27'-32" LT.
D = 16°
R = 358.10
T = 77.62
L = 152.87
E = 8.31
No Bank
MAG 19-19
BM 5-B
S.I.R. 12" YB
USElev 584.81
BM 5C
S.I.R. 8" YB
U.S. ELEV. 664.01'
BEGIN R.O.W. PROJECT
BRS 0238(2) REV. STA. 116+50 ℄
PI 112+20.00 =
112+17.42
Orig Surv POST 110+95.11
Rev Surv POST 120+20.18
Rev Surv POST 121+89.51
Rev Surv POST 123+33.21
Rev Surv POST 122+20 Rt - 122+50 Lt
New 0+25 ℄ Con't to 1+25
Rev Surv POST 115+23.18 =
Rev No River St Trav 10+00.00
Δ = 34°55'30" Rt
Rev No River St Trav 10+09.79 =
Orig No River St Trav 0+00
Rev Surv PC 110+82.02
Rev Surv PT 113+55.40
Rev Surv PC 116+12.80
Rev So River St Trav 10+00.64 =
Orig Surv So River St 0+00.00
Rev Surv PT 117+65.82
Rev Surv POST 117+67.00
Stop Roadway
Begin Bridge
Rev Surv POST 116+90.38 =
Rev. So. River St Trav 10+00.00
Rev Surv PT 116+90.42 =
116+88.05
Rev Curve Data
Δ = 19°08'12" Rt
D = 7°
R = 818.51
T = 137.95
L = 273.38
E = 11.55
N 50°03'42" W
N 30°55'30" W
N 24°-27'-32" E
Construct Special Ditch
W/Stone Fill Type I (To be paid as item 204.20)
Rt
121+65 – 122+50
121+85 – 122+05
Scarifying Existing Pavement
120+25 – 121+40
Stone Fill Type II For Slope Protection
Lt
120+75 – 122+25
Rt
Construct Satisfactory Approach
117+50
Begin Project BRS0238(2)
VILLAGE OF MORRISVILLE
VILLAGE OF MORRISVILLE WATER & LIGHT DEPT.
PARKER, REGINALD G. & MARION N. PARKER, JUNE HELEN
KELLEY, JAMES M. II
KELLEY, MAURICE L., JR.
BM by AE
Chiseled in ledge
USElev 599.89
REV 116+60 25' RT.
REV 117+50 25' RT.
REV 117+50 28' RT.
REV 120+20 27' LT.
REV 120+20 23' RT.
REV 120+50 60' RT.
REV 122+30 80' LT.
REV 124+00 130' LT.
REV 121+43 88' RT.
REV 122+25 110' RT.
REV 123+50 145' RT.
Stone Fill Type II
CONST. EASE. (T)
SR(T)
1
2
3A
3B
4A
4B
4C
Flow
Guardrail Standard Steel Beam w/Wood Posts Type II
Lt
117+20.5 – 117+67
120+41 – 123+375
Rt
117+08 – 117+67
120+41 – 121+23
Erosion Matting
Lt
122+50 – 124+00
Rt
122+50 – 124+00
Removal and Disposal of Existing Guardrail
Lt
117+49 – 117+64
120+25 – 120+75
Rt
117+58 – 117+69
120+25 – 120+90
120+75 – 121+50
Changing Elev of Sewer Manhole
Lt
117+30
End Bridge, Resume Roadway
Rev Surv POT 120+41.00
MATCH LINE
SEE SHEET 6 OF 7
117
DATUM
VERTICAL
HORIZONTAL
SURVEYED BY
DRAWN BY
TRACED BY
DATE
MORRISTOWN
PROJ. BRS NO. 0238(2)
SHEET 5 OF 7 SHEETS

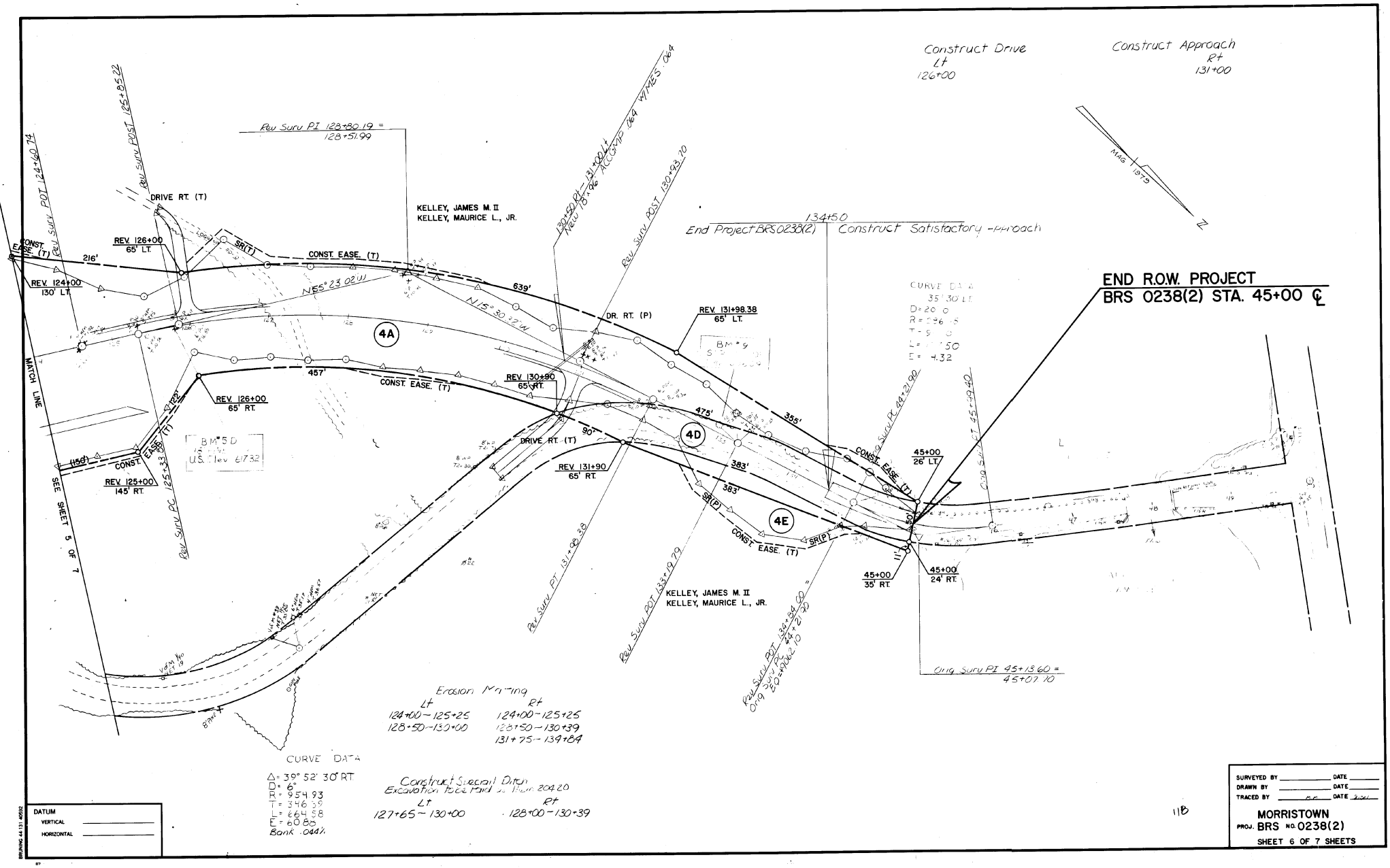
Construct Drive
Lt
126+00
Construct Approach
Rt
131+00
MAG 1979
N
Rev Surv PI 128+80.19 =
128+51.99
Rev Surv POST 125+85.22
Rev Surv POST 124+60.74
DRIVE RT. (T)
KELLEY, JAMES M. II
KELLEY, MAURICE L., JR.
130+50 RT - 131+00 Lt
New 8" x 96" ACCESS TIP ORG W/WES Orig
Rev Surv POST 130+93.70
134+50
End Project BRS 0238(2)
Construct Satisfactory Approach
END R.O.W. PROJECT
BRS 0238(2) STA. 45+00 ℄
CURVE DATA
35° 30' Lt
D= 20° 0'
R= 286.65
T= 93.50
L= 177.50
E= 4.32
CONST. EASE. (T)
REV. 126+00
65' LT.
REV. 124+00
130' LT.
216'
SR(T)
CONST. EASE. (T)
639'
N55° 23' 02"W
N15° 30' 32"W
DR. RT. (P)
REV. 131+98.38
65' LT.
4A
BM 5
Elev 6173
457'
CONST. EASE. (T)
REV. 130+90
65' RT.
REV. 126+00
65' RT.
122'
CONST. EASE. (T)
(150')
REV. 125+00
145' RT.
Rev Surv PC 125+33.66
MATCH LINE
SEE SHEET 5 OF 7
BM 5 D
Elev 6173
DRIVE RT. (T)
90°
REV. 131+90
65' RT.
4D
475'
355'
Orig Surv PC 44+12.90
CONST. EASE. (T)
45+00
26' LT.
383'
383'
SR(P)
4E
CONST. EASE. (T)
SR(P)
45+00
35' RT.
45+00
24' RT.
Rev Surv PT 131+08.38
Rev Surv POT 133+19.79
KELLEY, JAMES M. II
KELLEY, MAURICE L., JR.
Rev Surv POT 134+34.60 =
Orig Surv PC 44+21.50
Rev Surv PC 134+06.10
Orig Surv PI 45+13.60 =
45+07.10
Erosion Matting
Lt
124+00 - 125+25
128+50 - 130+00
Rt
124+00 - 125+25
128+50 - 130+39
131+75 - 139+84
CURVE DATA
Δ= 39° 52' 30" RT
D= 6°
R= 954.93
T= 346.59
L= 664.58
E= 60.80
Bank .044'
Construct Subgrade Data
Excavation Tolerance +.1 Plus .20 & .20
Lt
127+65 - 130+00
Rt
128+00 - 130+39
11B
DATUM
VERTICAL
HORIZONTAL
SURVEYED BY
DRAWN BY
TRACED BY
DATE
MORRISTOWN
PROJ. BRS NO. 0238(2)
SHEET 6 OF 7 SHEETS
BRUNING 44-131 40592

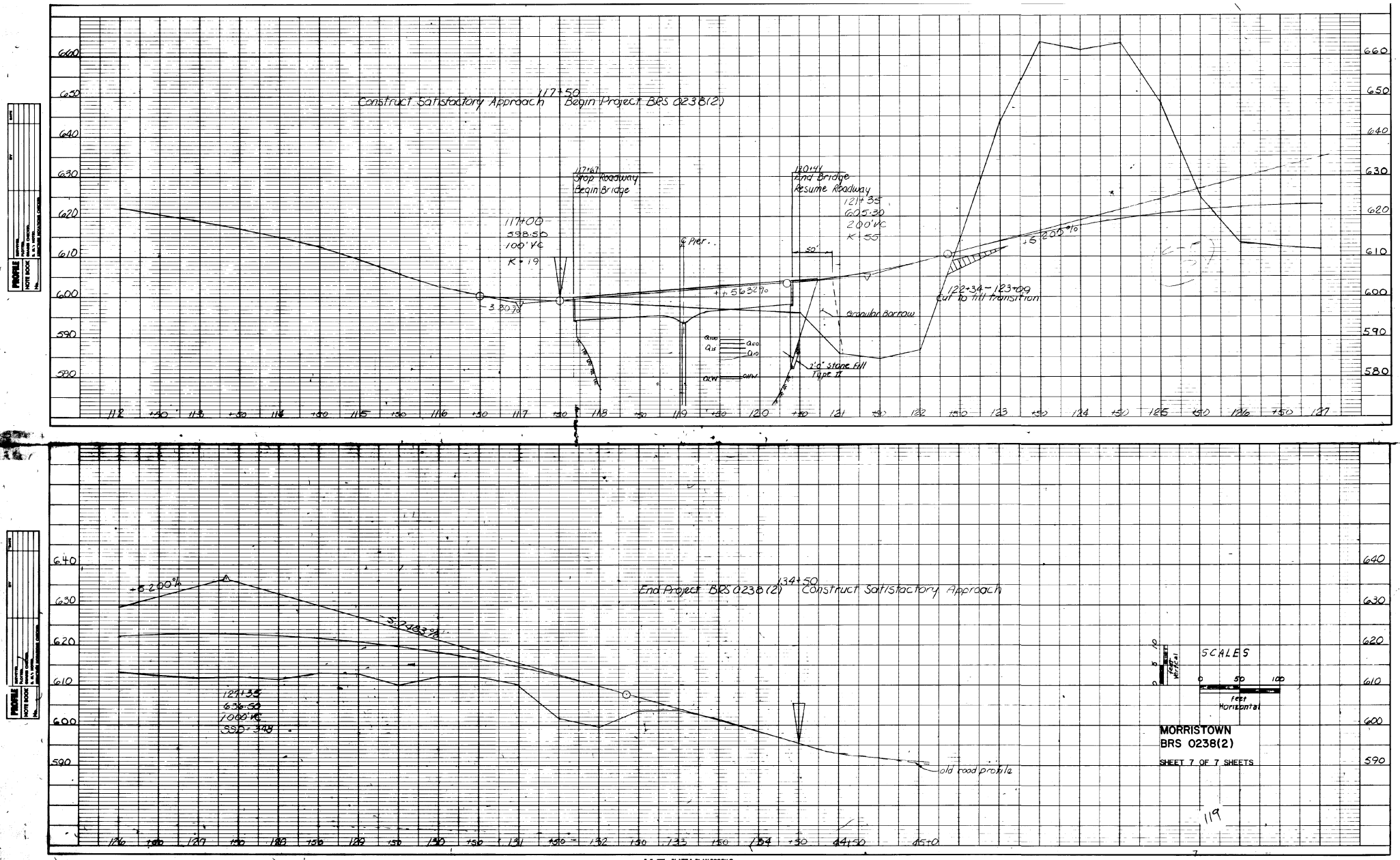

K•E PLATE 1, PLAN-PROFILE