Spacing of waterline support beams are not all at 9'-0" spaces as shown on Contract Drawing Sheet 39 of 75. Maximum variation appears to be 9". The increase in span is acceptable, however the Contractor should refer to the Special Provision (Water Main on Bridge) to ensure compliance with the hanger distance to pipe joint requirements are also met.

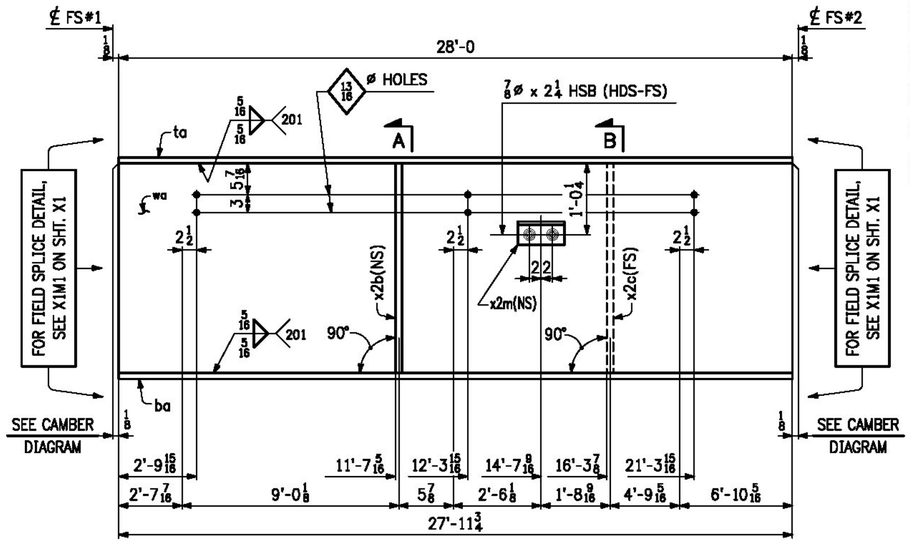

LINE	NO. OF PCS.	SHIP MARK	ASS'Y MARK	MATERIAL SHAPE	SECTION	LENGTH FT.	LENGTH IN.	MATERIAL SPEC.	ITEM NO.	REMARKS
1	1	7G2B			GIRDER					5223 lbs.
2	1		wa	PL	1/2 x 36	28	0	M270-50WT2	1/19	1715 lbs.
3	1		ta	PL	1 x 18	28	0	M270-50WT2	2/11	1715 lbs.
4	1		ba	PL	1 x 18	27	11 3/4	M270-50WT2	2/11	1714 lbs.
5										
6	1		x2b	PL	1/2 x 7	3	0	M270-50W	3/11	36 lbs.
7	1		x2c	PL	1/2 x 7	3	0	M270-50W	3/11	36 lbs.
8	1		x2m	L	4 x 4 x 3/8	0	8	M270-50W	3/13	7 lbs.
9										
10	2				7/8⌀ HSB	0	2 1/4	M164 TYPE 3	6/2	
11	2				7/8⌀ WASHER			M293-3	6/6	
12										
13										
14										
15										
16										
17										
18										
19										
20										
21										
22										
23										
24										
25										

ONE ~ GIRDER ~ 7G2B

- FOR GIRDER STANDARD DETAILS, SEE SHT. X2.
- FOR WEB CUTTING DIAGRAM, SEE SHT. C3.
- FOR FLANGE CUTTING DIAGRAMS, SEE SHT. C3.
- FOR GENERAL NOTES, SEE SHT. GN1.

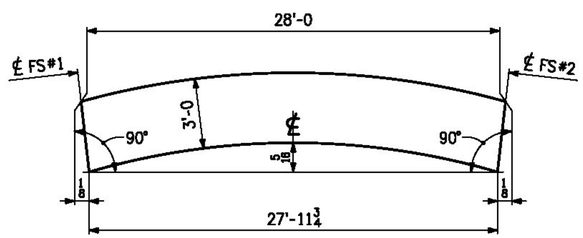

CAMBER DIAGRAM

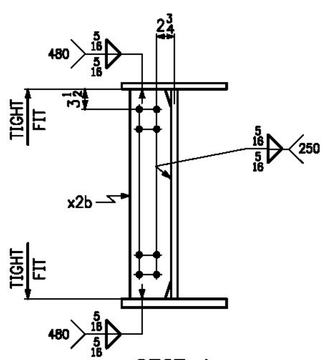

SECT. A

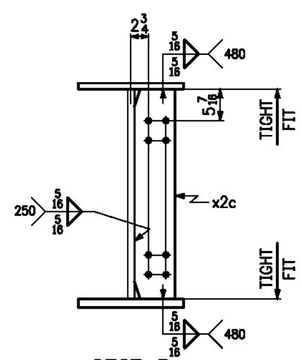

SECT. B

T.Y. LIN INTERNATIONAL

THE STAMPED DOCUMENTS ARE HEREBY:

____ APPROVED
_X_ APPROVED AS NOTED
____ REVISE AND RESUBMIT

SEE TRANSMITTAL FOR ADDITIONAL INFORMATION AS APPLICABLE.

THIS REVIEW IS FOR GENERAL CONFORMANCE WITH DESIGN CONCEPT ONLY. ANY DEVIATION FROM THE PLANS OR SPECIFICATIONS NOT CLEARLY NOTED BY THE CONTRACTOR HAS NOT BEEN REVIEWED. REVIEW BY THE ENGINEER SHALL NOT RELIEVE THE CONTRACTOR OF THE CONTRACTUAL RESPONSIBILITY FOR ANY ERRORS OR DEVIATION FROM THE CONTRACT REQUIREMENTS.

RICK HEBERT — REVIEWER
2/2/2015 — DATE

NO.	DATE	REMARKS	BY

REVISIONS

CASCO BAY STEEL STRUCTURES
ONE WALLACE AVENUE
SOUTH PORTLAND, ME 04106
PHONE: 207-780-6722
FAX: 207-780-6726

STRUCTURE: BENMONT AVE. (TH-7) (URBAN MINOR ARTERIAL)
LOCATION: TOWN OF BENNINGTON, VERMONT
PROJECT NO.: BRIDGE NO. 57 PROJECT NO. BRF 1000(16)
ENGINEER: STATE OF VERMONT AGENCY OF TRANSPORTATION
CUSTOMER: ALPINE CONSTRUCTION
ITEM: GIRDER ~ 7G2B
SURFACE PREP.: SSPC-SP10 OPEN HOLES: 15/16⌀ (UN)
PAINT: NONE

APPROVAL	DRAWN	GDC	12-10-14	SHEET NO.	JOB NO.
SHOP	CHECKED	PM	1-5-15	7	605

1411-9 G2B-1411

Sheet 07 - Plotted: 01/06/2015 @ 08:38 (NEWTHER)