STATE OF VERMONT
AGENCY OF TRANSPORTATION

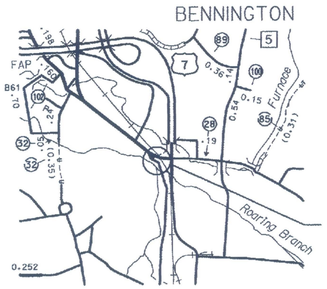

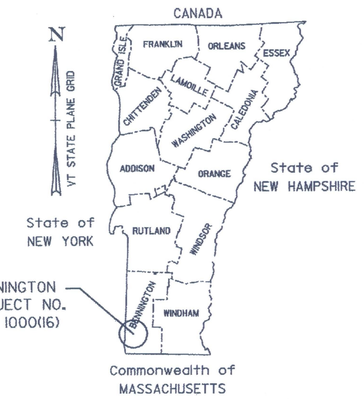

RECORD PLANS

CONTRACTOR: ALPINE CONSTRUCTION, LLC - SCHUYLERVILLE, NY

RESIDENT ENGINEER: RON LEMAIRE

CONSTRUCTION BEGAN: MARCH 09, 2015

CONSTRUCTION COMPLETE: JUNE 05, 2017

RECORD PLANS BY: RON LEMAIRE & AARON WEAVER

I HEREBY CERTIFY THAT ALL THE CONSTRUCTION REQUIRED BY THIS SET OF DRAWINGS HAS BEEN ACCOMPLISHED AS INDICATED HEREIN.

BY _____ FOR RESIDENT ENGINEER
Mark H. Mackintash

DATE May 29, 2018

NOTE: Any further information concerning final quantities, amounts or other details relative to this project may be found by contacting Vtrans Records Management.

PROPOSED IMPROVEMENT
BRIDGE PROJECT
TOWN OF BENNINGTON
COUNTY OF BENNINGTON
BENMONT AVE. (TH-7) (URBAN MINOR ARTERIAL)
BRIDGE NO. 57

PROJECT LOCATION

BEGINNING ON BENMONT AVENUE APPROXIMATELY 0.08 MILES NORTH OF ITS INTERSECTION WITH HUNT STREET AND EXTENDING NORTHERLY ALONG BENMONT AVENUE APPROXIMATELY 309 FEET (0.06 MILES).

STRUCTURE LENGTH:	269.16	FEET
ROADWAY LENGTH:	40.04	FEET
PROJECT LENGTH:	309.20	FEET

WORK TO BE PERFORMED UNDER THIS PROJECT INCLUDES REPLACEMENT OF BRIDGE #57 WITH A NEW BRIDGE ON EXISTING ALIGNMENT WITH CHANNEL WORK AND OTHER RELATED HIGHWAY ITEMS.

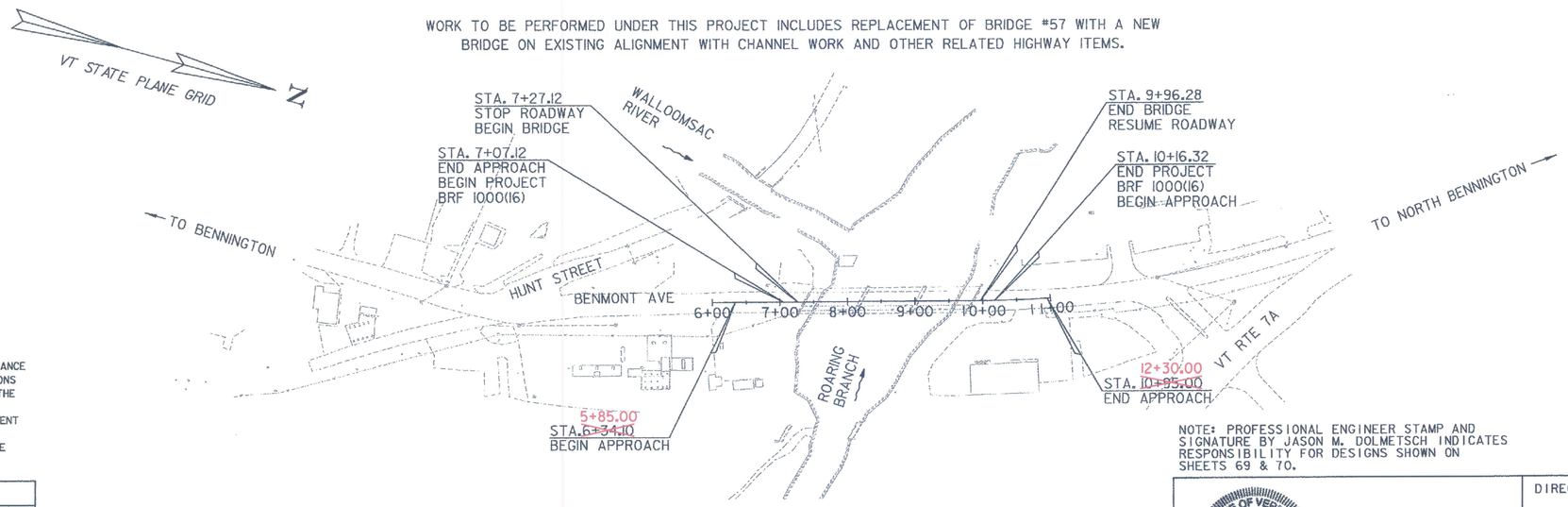

200 0 200
SCALE IN FEET

CONSTRUCTION IS TO BE CARRIED ON IN ACCORDANCE WITH THESE PLANS AND THE STANDARD SPECIFICATIONS FOR CONSTRUCTION DATED 2011, AS APPROVED BY THE FEDERAL HIGHWAY ADMINISTRATION ON JULY 20, 2011 FOR USE ON THIS PROJECT, INCLUDING ALL SUBSEQUENT REVISIONS AND SUCH REVISED SPECIFICATIONS AND SPECIAL PROVISIONS AS ARE INCORPORATED IN THESE PLANS.

QUALITY ASSURANCE PROGRAM : LEVEL 2	
SURVEYED BY : L. ORVIS PC & R. BULLOCK - L. ORVIS PC & G. HITCHCOCK	
SURVEYED DATE : 3/16/98 - 10/23/06	
DATUM	
VERTICAL	NAVD 88
HORIZONTAL	NAD 83 (92)

NOTE: PROFESSIONAL ENGINEER STAMP AND SIGNATURE BY JASON M. DOLMETSCH INDICATES RESPONSIBILITY FOR DESIGNS SHOWN ON SHEETS 69 & 70.

STATE OF VERMONT
JASON M. DOLMETSCH
No. 7710
Structural
LICENSED
PROFESSIONAL ENGINEER

TY·LIN INTERNATIONAL

DIRECTOR OF PROJECT DELIVERY
APPROVED _____ DATE 8/1/2014

PROJECT MANAGER : DOUGLAS BONNEAU, P.E.

PROJECT NAME : BENNINGTON
PROJECT NUMBER : BRF 1000 (16)

SHEET 1 OF 75 SHEETS

STATE OF VERMONT
AGENCY OF TRANSPORTATION

PRELIMINARY INFORMATION SHEET (BRIDGE)

LRFD

INDEX OF SHEETS

PLAN SHEETS

1	TITLE SHEET
2	PRELIMINARY INFORMATION SHEET
3-5	QUANTITY SHEETS 1-3
6	EARTHWORK SUMMARY/ITEM DETAIL & DRAINAGE
7	ROADWAY TYPICAL SECTIONS
8	BRIDGE TYPICAL SECTION
9	EARTHWORK TYPICAL SECTIONS
10	PROJECT NOTES
11	CONVENTIONAL SYMBOLOGY LEGEND
12	TIE SHEET
13	ALIGNMENT TIE SHEET
14	LAYOUT PLAN SHEET - REVISED
15	PROFILE SHEET
16	PIPE PROFILE SHEET
17	DRAINAGE DETAILS
18	BRIDGE CONSTRUCTION PHASING - REVISED
19	TRAFFIC CONTROL NOTES
20-23	TRAFFIC CONTROL PLAN PHASE I-IV
24	DETOUR SIGNING PLAN
25-26	TEMPORARY TRAFFIC BARRIER - BRACED 1-2
27	SIGN DETAIL SHEET
28	SIGNING AND STRIPING PLAN
29	BORING INFORMATION AND LAYOUT SHEET
30-33	BORING LOGS 1-4
34	GENERAL PLAN & ELEVATION
35	RAIL LAYOUT SHEET
36-37	DECK SLAB REINFORCING PLANS 1-2
38	DECK SLAB REINFORCING DETAILS
39	FRAMING PLAN AND CROSS FRAME DETAILS
40	GIRDER ELEVATION
41	GIRDER DETAILS
42	CAMBER DIAGRAM AND DEAD LOAD DEFLECTIONS
43	BEARING DEVICE DETAILS
44-45	APPROACH SLAB DETAILS 1-2
46	ABUTMENT NO. 1 - PLAN & ELEVATION
47	ABUTMENT NO. 1 - REINFORCING
48	ABUTMENT NO. 2 - PLAN & ELEVATION
49	ABUTMENT NO. 2 - REINFORCING
50	ABUTMENT SECTIONS
51	PIER MODIFICATION - REVISED
52	CONCRETE SUBSTRUCTURE REPAIR DETAILS
53-54	RAILING DETAIL SHEETS 1-2
55	REINFORCING STEEL SCHEDULE
56	EROSION PREVENTION AND SEDIMENT CONTROL (EPSC) NARRATIVE
57	EPSC EXISTING CONDITIONS SITE PLAN
58	EPSC SITE PLAN
59	EPSC FINAL CONDITIONS SITE PLAN
60-63	EPSC DETAIL SHEETS 1-4
64	BENMONT AVE. CROSS SECTIONS
65-66	CHANNEL CROSS SECTIONS 1-2
67	UTILITY PLAN SHEET
68	UTILITY DUCT BANK DETAILS
69	WATERLINE ALIGNMENT - REVISED
70	WATERLINE DETAILS

REFERENCE SHEETS - EXISTING BRIDGE

71	PROPOSED BRIDGE FOR BENNINGTON F.A.P. NO. 23
72	30° SKEW STANDARD I-BEAM BRIDGE
73	ABUTMENT NO. 1
74	ABUTMENT NO. 2
75	DETAILS OF PIERS 1 & 2

STRUCTURES DETAIL SHEETS

SD-501.00	CONCRETE DETAILS AND NOTES	5/7/2010
SD-502.00	CONCRETE DETAILS AND NOTES	5/7/2010
SD-516.10	BRIDGE JOINT ASHPALTIC PLUG	5/7/2010
SD-601.00	STRUCTURAL STEEL DETAILS AND NOTES	5/7/2010
SD-602.00	STRUCTURAL STEEL PLATE GIRDER DETAILS AND NOTES	5/7/2010

STANDARDS LIST

B-5	SLOPE GRADING, EMBANKMENTS, MUCK	06-01-1994
B-71	STANDARD FOR RESIDENTIAL AND COMMERCIAL DRIVES	07-08-2005
C-3A	SIDEWALK RAMPS	03-10-2008
C-10	CURBING	02-11-2008
D-13	CONCRETE CATCH BASIN	01-03-2000
D-15	PRECAST REINF CONC. MH-GRATES, CAST IRON GRATE WITH FRAME, TYPE D & E	06-01-1994
E-121	STANDARD SIGN PLACEMENT - CONVENTIONAL ROAD	08-08-1995
E-123	GUIDE SIGN PLACEMENT - MISCELLANEOUS DETAILS	03-16-2004
E-163	TUBULAR STEEL SIGN POST	05-20-1999
E-193	PAVEMENT MARKING DETAILS	08-18-1995
G-1	STEEL BEAM GUARDRAIL DETAILS (POST, DELINEATOR, TYPICALS)	02-10-2014
G-1D	STEEL BEAM GUARDRAIL DETAILS (END TERMINAL, ANCHOR, MEDIAN)	02-10-2014
S-363	THRIE BEAM TO STANDARD STEEL BEAM TRANSITION SECTION	04-23-2012
T-1	TRAFFIC CONTROL GENERAL NOTES	08-06-2012
T-10	CONVENTIONAL ROADS CONSTRUCTION APPROACH SIGNING	08-06-2012
T-17	TRAFFIC CONTROL MISCELLANEOUS DETAILS	08-06-2012
T-24	TRAFFIC CONTROL FOR MAINTENANCE PAVEMENT MARKING OPERATION	08-06-2012
T-28	CONSTRUCTION SIGN DETAILS	08-06-2012
T-29	CONSTRUCTION SIGN DETAILS	08-06-2012
T-30	CONSTRUCTION SIGN DETAILS	08-06-2012
T-35	CONSTRUCTION ZONE LONGITUDNAL DROP-OFFS	08-06-2012
T-36	CONSTRUCTION ZONE LONGITUDNAL DROP-OFFS FOR PAVING	08-06-2012
T-40	DELINEATORS AND MILEPOSTS	01-02-2013
T-42	BRIDGE NUMBER PLAQUE	04-09-2014
T-44	MILEMARKER DETAILS STATE AND TOWN HIGHWAYS	04-09-2014
T-45	SQUARE TUBE SIGN POST AND ANCHOR	01-02-2013

FINAL HYDRAULIC REPORT

HYDROLOGIC DATA

DATE: DECEMBER 30, 2011

DRAINAGE AREA: 41.4 SQ. MI.
CHARACTER OF TERRAIN: HILLY TO MOUNTAINOUS VALLEY SETTING
STREAM CHARACTERISTICS: CHANNELIZED SINUOUS, LITTLE TO NO FLOODPLAIN
NATURE OF STREAMBED: GRAVEL AND COBBLE

Q 2.33 =	2170 CFS	Q50 =	5750 CFS
Q 10 =	3300 CFS	Q 100 =	7100 CFS
Q 25 =	4600 CFS	Q 500 =	11300 CFS

DATE OF FLOOD OF RECORD: AUGUST 28, 2011
ESTIMATED DISCHARGE: 9420 CFS AT USGS 01334000
WATER SURFACE ELEVATION: UNKNOWN
NATURAL STREAM VELOCITY: 9.2 FPS @ Q50
ICE CONDITIONS: LOW TO MODERATE
DEBRIS: LOW TO MODERATE
DOES THE STREAM REACH MAXIMUM HIGHWATER ELEV. RAPIDLY? NO
IS ORDINARY RISE RAPID? NO
IS STAGE AFFECTED BY UPSTREAM OR DOWNSTREAM CONDITIONS? NO
IF YES, DESCRIBE N/A

WATERSHED STORAGE: <5%
HEADWATERS: -
UNIFORM: X
IMMEDIATELY ABOVE SITE: -

EXISTING STRUCTURE INFORMATION

STRUCTURE TYPE: 3 SPAN STEEL BEAM, NON-CONTINUOUS
YEAR BUILT: 1938
CLEAR SPAN (NORMAL TO STREAM): 216.2 FT
VERTICAL CLEARANCE ABOVE STREAMBED: 15.8 FT
WATERWAY OF FULL OPENING: 2790 SQ FT
DISPOSITION OF STRUCTURE: REMOVE SUPERSTRUCTURE AND PORTION OF ABUTMENT CAP
TYPE OF MATERIAL UNDER SUBSTRUCTURE: ABUTMENTS AND PIERS ON GRAVEL

WATER SURFACE ELEVATIONS AT: ONE BRIDGE LENGTH UPSTREAM

Q 2.33 =	616.8 FT	VELOCITY =	7.4 FT/SEC
Q 10 =	617.4 FT	"	8.4 FT/SEC
Q 25 =	618.0 FT	"	9.3 FT/SEC
Q50 =	618.4 FT	"	9.9 FT/SEC
Q 100 =	618.9 FT	"	10.6 FT/SEC

LONG TERM STREAMBED CHANGES: THALWEG 2.5 FT LOWER THAN 1938 PLAN ELEV.
IS THE ROADWAY OVERTOPPED BELOW Q100? NO
FREQUENCY: N/A
RELIEF ELEVATION: 627.4
DISCHARGE OVER ROAD @ Q100: N/A

UPSTREAM STRUCTURE

TOWN: BENNINGTON, VT — DISTANCE: 600 FT
HIGHWAY #: U.S. ROUTE 7 — STRUCTURE #:
CLEAR SPAN: — CLEAR HEIGHT:
YEAR BUILT: — FULL WATERWAY:
STRUCTURE TYPE:

DOWNSTRUCTURE STRUCTURE

TOWN: BENNINGTON — DISTANCE: 2 MI.
HIGHWAY #: VT. ROUTE 279 (BENNINGTON CONNECTOR) — STRUCTURE #:
CLEAR SPAN: — CLEAR HEIGHT:
YEAR BUILT: — FULL WATERWAY:
STRUCTURE TYPE:

LRFR LOAD RATING FACTORS

LOADING LEVELS	TRUCK						
	H-20	HL-93	3S2	6 AXLE	3A. STR.	4A. STR.	5A. SEMI
TONNAGE	**20**	**36**	**36**	**66**	**30**	**34.5**	**38**
INVENTORY	4.01	1.32					
POSTING							
OPERATING	5.21	1.71	3.12	1.97	2.86	2.57	2.74
COMMENTS:							

PROPOSED STRUCTURE

STRUCTURE TYPE: 3 SPAN CONTINUOUS STEEL PLATE GIRDER

CLEAR SPAN (NORMAL TO STREAM): 229.6 FT
VERTICAL CLEARANCE ABOVE STREAMBED: 16.9 FT
WATERWAY OF FULL OPENING: 3050 SQ FT

WATER SURFACE ELEVATIONS AT: ONE BRIDGE LENGTH UPSTREAM

Q 2.33 =	616.8 FT	VELOCITY =	7.4 FT/SEC
Q 10 =	617.4 FT	"	8.4 FT/SEC
Q 25 =	618.0 FT	"	9.3 FT/SEC
Q50 =	618.4 FT	"	9.9 FT/SEC
Q 100 =	618.9 FT	"	10.6 FT/SEC

IS THE ROADWAY OVERTOPPED BELOW Q100? NO
FREQUENCY: N/A
RELIEF ELEVATION: 627.4
DISCHARGE OVER ROAD @ Q100: N/A
AVERAGE LOW ELEVATION OF SUPERSTRUCTURE: 627.5
VERTICAL CLEARANCE: 8.6 FT @ Q100

SCOUR: CALCULATED SCOUR DEPTH BELOW PIER FOOTINGS. EXISTING ABUTMENT HEAVY RIPRAP IN FAIR CONDITION AND TO BE LEFT IN PLACE
REQUIRED CHANNEL PROTECTION: HEAVY RIPRAP AT EXISTING PIERS

PERMIT INFORMATION

AVERAGE DAILY FLOW:	59 CFS	
ORDINARY LOW WATER:	27 CFS	DEPTH OR ELEVATION: 612.0 FT
ORDINARY HIGH WATER:	930 CFS	614.7 FT

TEMPORARY BRIDGE REQUIREMENTS

STRUCTURE TYPE: N/A
CLEAR SPAN (NORMAL TO STREAM): N/A
VERTICAL CLEARANCE ABOVE STREAMBED: N/A
WATERWAY AREA OF FULL OPENING: N/A

ADDITIONAL INFORMATION

TRAFFIC MAINTENANCE NOTES

1. MAINTAIN SINGLE LANE NORTHBOUND TRAFFIC USING PHASED CONSTRUCTION SEQUENCE
2. DETOUR SOUTHBOUND TRAFFIC SOUTH ON VT ROUTE 7
3. SIDEWALK ON BRIDGE WILL BE CLOSED DURING CONSTRUCTION (SEE TRAFFIC CONTROL NOTES)

DESIGN VALUES

1. DESIGN LIVE LOAD		HL-93
2. FUTURE PAVEMENT	d_p:	0.0 INCH
3. ABUTMENT BEARING TO BEARING LENGTH (THREE SPANS) (92.00 - 84.00 - 92.00) FT	L:	268.00 FT
4. MIN. MID-SPAN POS. CAMBER @ RELEASE (PRESTRESSED UNITS)	Δ:	- - -
5. PRESTRESSING STRAND	f_y:	- - -
6. PRESTRESSED CONCRETE STRENGTH	f'_c:	- - -
7. PRESTRESSED CONCRETE RELEASE STRENGTH	f'_{ci}:	- - -
8. CONCRETE, HIGH PERFORMANCE CLASS AA	f'_c:	- - -
9. CONCRETE, HIGH PERFORMANCE CLASS A	f'_c:	4.0 KSI
10. CONCRETE, HIGH PERFORMANCE CLASS B	f'_c:	3.5 KSI
11. CONCRETE, CLASS C	f'_c:	- - -
12. REINFORCING STEEL	f_y:	60 KSI
13. STRUCTURAL STEEL AASHTO M270 (WEATHERING)	f_y:	50 KSI
14. NOMINAL BEARING RESISTANCE OF SOIL	q_n:	11.0 KSF
15. SOIL BEARING RESISTANCE FACTOR (REFER TO AASHTO LRFD)	ϕ:	0.45
16. NOMINAL BEARING RESISTANCE OF ROCK	q_n:	- - -
17. ROCK BEARING RESISTANCE FACTOR (REFER TO AASHTO LRFD)	ϕ:	- - -
18. PILE RESISTANCE FACTOR	ϕ:	0.65
19. LATERAL PILE DEFLECTION	Δ:	1.36 INCH
20. BASIC WIND SPEED	V_{3s}:	100 MPH
21. MINIMUM GROUND SNOW LOAD	p_g:	- - -
22. SEISMIC DATA PGA: 9 %g	S_s:	25 %g
	S_1:	7 %g

TRAFFIC DATA

YEAR	ADT	DHV	% D	% T	ADTT
2013	10500	1100	56	2.9	320
2033	11000	1150	56	4.6	530

20 year ESAL for flexible pavement from 2013 to 2033 : 1577000
40 year ESAL for flexible pavement from 2013 to 2053 : 3548000
Design Speed : 30 mph

AS BUILT "REBAR" DETAIL

LEVEL I	LEVEL II	LEVEL III
TYPE:	TYPE:	TYPE:
GRADE:	GRADE:	GRADE:

TEMPORARY BRIDGE PROFILE ALONG TEMP CL

BOTTOM OF BEAMS ELEV. = 0.00 FT

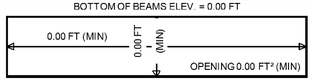

PROJECT NAME: **BENNINGTON**
PROJECT NUMBER: **BRF 1000(16)**

FILE NAME: **z88j087bdr_pi.xls**
PROJECT LEADER: **R. HEBERT**
DESIGNED BY: **D. BURHANS**
PRELIMINARY INFORMATION SHEET

PLOT DATE: 8/29/2014
DRAWN BY: **D. BURHANS**
CHECKED BY: **R. HEBERT**

STATE OF VERMONT
AGENCY OF TRANSPORTATION

QUANTITY SHEET 1

SUMMARY OF ESTIMATED QUANTITIES							TOTALS		DESCRIPTIONS				DETAILED SUMMARY OF QUANTITIES		
ROADWAY	TRAINING	EROSION CONTROL	UTILITIES-BID ITEMS ONO FEDERAL/STATE PARTICIPATIONS	BRIDGE	FULL C.E. ITEMS	GRAND TOTAL	FINAL	UNIT	ITEMS	ITEM NUMBER	ROUND	QUANTITIES	UNIT	ITEMS
1						1		LS	CLEARING AND GRUBBING, INCLUDING INDIVIDUAL TREES AND STUMPS	201.10	-			
158						158		CY	COMMON EXCAVATION	203.15	2			
20						20		CY	SOLID ROCK EXCAVATION	203.16	EST			
225						225		CY	TRENCH EXCAVATION OF EARTH	204.20	3			
1						1		CY	TRENCH EXCAVATION OF EARTH, EXPLORATORY (N.A.B.I.)	204.22	-			
				740		740		CY	STRUCTURE EXCAVATION	204.25	6			
				265		265		CY	GRANULAR BACKFILL FOR STRUCTURES	204.30	3			
				840		840		CY	COFFERDAM EXCAVATION, EARTH	208.30	1			
				1		1		LS	COFFERDAM (PIER NO. 1)	208.40	-			
				1		1		LS	COFFERDAM (PIER NO. 2)	208.40	-			
330						330		SY	COLD PLANING, BITUMINOUS PAVEMENT	210.10	4			
208						208		CY	SUBBASE OF DENSE GRADED CRUSHED STONE	301.35	-			
2.4				1.5		3.9		CWT	EMULSIFIED ASPHALT	404.65	0.05			
1						1		LU	PRICE ADJUSTMENT, ASPHALT CEMENT (N.A.B.I.)	406.50	-			
				440		440		CY	CONCRETE, HIGH PERFORMANCE CLASS A	501.33	4			
				136		136		CY	CONCRETE, HIGH PERFORMANCE CLASS B	501.34	1			
				1		1		LS	FURNISHING EQUIPMENT FOR DRIVING PILING	504.10	-			
				265		265		LF	STEEL PILING, HP 12 X 84	505.165	EST			
				2		2		EACH	DYNAMIC PILE LOADING TEST	505.45	-			
				303800		303800		LB	STRUCTURAL STEEL, PLATE GIRDER	506.55	50			
				9600		9600		LB	REINFORCING STEEL, LEVEL I	507.11	84			
				121700		121700		LB	REINFORCING STEEL, LEVEL II	507.12	32			
				450		450		LF	DRILLING AND GROUTING DOWELS	507.16	-			
				550		550		EACH	MECHANICAL BAR CONNECTOR	507.19	7			
				1		1		LS	SHEAR CONNECTORS (3500 - 7/8" x 7")	508.15	-			
				60		60		GAL	WATER REPELLENT, SILANE	514.10	1			
				68		68		LF	BRIDGE EXPANSION JOINT, ASPHALTIC PLUG	516.10	-			
				890		890		SY	SHEET MEMBRANE WATERPROOFING, TORCH APPLIED	519.20	8			
				68		68		LF	JOINT SEALER, HOT POURED	524.11	-			
				537		537		LF	BRIDGE RAILING, GALVANIZED 4 RAIL BOX BEAM	525.34	3			
				1		1		LS	MAINTENANCE OF STRUCTURES AND APPROACHES	527.10	-			
				1		1		EACH	PARTIAL REMOVAL OF STRUCTURE	529.20	-			
				4		4		EACH	BEARING DEVICE ASSEMBLY, STEEL REINFORCED ELASTOMERIC PAD (TYPE A)	531.17	-			
				6		6		EACH	BEARING DEVICE ASSEMBLY, STEEL REINFORCED ELASTOMERIC PAD (TYPE B)	531.17	-			
				40		40		SY	REPAIR OF CONCRETE SUBSTRUCTURE SURFACE, CLASS I	580.13	EST			
				15		15		SY	REPAIR OF CONCRETE SUBSTRUCTURE SURFACE, CLASS II	580.14	EST			
				1		1		CY	REPAIR OF CONCRETE SUBSTRUCTURE SURFACE, CLASS III	580.15	EST			

PROJECT NAME: BENNINGTON
PROJECT NUMBER: BRF 1000(16)

FILE NAME: z881087bdr_qs.dgn
PROJECT LEADER: R. HEBERT
DESIGNED BY: D. BURHANS/S. KELLER
QUANTITY SHEET #1

PLOT DATE: 8/8/2014
DRAWN BY: P. MCCLURE
CHECKED BY: D. BRYANT
SHEET 3 OF 75

STATE OF VERMONT
AGENCY OF TRANSPORTATION

QUANTITY SHEET 2

SUMMARY OF ESTIMATED QUANTITIES							TOTALS		DESCRIPTIONS				DETAILED SUMMARY OF QUANTITIES		
ROADWAY	TRAINING	EROSION CONTROL	UTILITIES-BID ITEMS (NO FEDERAL/STATE PARTICIPATION)	BRIDGE	FULL C.E. ITEMS	GRAND TOTAL	FINAL	UNIT	ITEMS	ITEM NUMBER	ROUND	QUANTITIES	UNIT	ITEMS
									BEGIN OPTION AA					
170						170		LF	18" CAAP .060 (2-2/3 X 1/2)	601.0215	4.78			
170						170		LF	18" PCCSP .064 (2-2/3 X 1/2)	601.0415	4.78			
170						170		LF	18" CPEP(SL)	601.2615	4.78			
									END OPTION AA					
3						3		EACH	PRECAST REINFORCED CONCRETE DROP INLET WITH CAST IRON GRATE	604.18	-			
2						2		EACH	PRECAST REINFORCED CONCRETE MANHOLE WITH CAST IRON COVER	604.21	-			
		20				20		HR	POWER GRADER RENTAL	608.15	EST			
		20				20		HR	ALL PURPOSE EXCAVATOR RENTAL, TYPE I	608.25	EST			
		20				20		HR	TRUCK RENTAL	608.37	EST			
		20				20		HR	LOADER RENTAL, TYPE I	608.40	EST			
25						25		MGAL	DUST CONTROL WITH WATER	609.10	2			
2				26		28		CY	STONE FILL, TYPE I	613.10	1			
13						13		CY	STONE FILL, TYPE III	613.12	1			
				840		840		CY	RIPRAP, HEAVY TYPE	613.15	1			
112						112		LF	VERTICAL GRANITE CURB	616.21	2			
60						60		LF	CAST-IN-PLACE CONCRETE CURB, TYPE B	616.28	1.51			
44						44		LF	REMOVAL OF EXISTING CURB	616.41	1			
64						64		SY	PORTLAND CEMENT CONCRETE SIDEWALK, 5 INCH	618.10	1			
10						10		SF	DETECTABLE WARNING SURFACE	618.30	EST			
4						4		EACH	YIELDING MARKER POSTS	619.17	-			
125						125		LF	STEEL BEAM GUARDRAIL, GALVANIZED	621.20	2			
3						3		EACH	ANCHOR FOR STEEL BEAM RAIL	621.60	-			
4						4		EACH	GUARDRAIL APPROACH SECTION, GALVANIZED 4 RAIL BOX BEAM	621.73	-			
239						239		LF	REMOVAL AND DISPOSAL OF GUARDRAIL	621.80	3			
160						160		HR	UNIFORMED TRAFFIC OFFICERS	630.10	EST			
500						500		HR	FLAGGERS	630.15	EST			
					1	1		LS	FIELD OFFICE-ENGINEERS	631.10	-			
					1	1		LS	TESTING EQUIPMENT, CONCRETE	631.16	-			
					1	1		LS	TESTING EQUIPMENT, BITUMINOUS	631.17	-			
					3000	3000		DL	FIELD OFFICE TELEPHONE (N.A.B.I.)	631.26	EST			
	520					520		HR	EMPLOYEE TRAINEESHIP	634.10	EST			
1						1		LS	MOBILIZATION / DEMOBILIZATION	635.11	-			
930						930		LF	4 INCH WHITE LINE	646.20	8			
930						930		LF	4 INCH YELLOW LINE	646.21	8			
27				315		342		SY	GEOTEXTILE UNDER STONE FILL	649.31	-			
		114				114		SY	GEOTEXTILE FOR SILT FENCE	649.51	1			
		50				50		LB	SEED	651.15	EST			
		10				10		LB	SEED, WINTER RYE	651.17	EST			
		50				50		LB	FERTILIZER	651.18	EST			

PROJECT NAME: BENNINGTON
PROJECT NUMBER: BRF 1000(16)

FILE NAME: z88J087bdr_qs.dgn
PROJECT LEADER: R. HEBERT
DESIGNED BY: D. BURHANS/S. KELLER
QUANTITY SHEET #2

PLOT DATE: 8/8/2014
DRAWN BY: P. MCCLURE
CHECKED BY: D. BRYANT
SHEET 4 OF 75

STATE OF VERMONT
AGENCY OF TRANSPORTATION

QUANTITY SHEET 3

SUMMARY OF ESTIMATED QUANTITIES							TOTALS		DESCRIPTIONS				DETAILED SUMMARY OF QUANTITIES		
ROADWAY	TRAINING	EROSION CONTROL	UTILITIES-BID ITEMS (NO FEDERAL/STATE PARTICIPATION)	BRIDGE	FULL C.E. ITEMS	GRAND TOTAL	FINAL	UNIT	ITEMS	ITEM NUMBER	ROUND	QUANTITIES	UNIT	ITEMS
		0.1				0.1		TON	AGRICULTURAL LIMESTONE	651.20	EST			
		0.1				0.1		TON	HAY MULCH	651.25	EST			
25						25		CY	TOPSOIL	651.35	3			
		1				1		LS	EPSC PLAN	652.10	-			
		80				80		HR	MONITORING EPSC PLAN	652.20	EST			
		1				1		LU	MAINTENANCE OF EPSC PLAN (N.A.B.I.)	652.30	-			
		40				40		SY	TEMPORARY EROSION MATTING	653.20	EST			
		30				30		CY	VEHICLE TRACKING PAD	653.35	EST			
		2				2		EACH	INLET PROTECTION DEVICE, TYPE I	653.40	-			
		1				1		EACH	FILTER BAG	653.45	-			
		460				460		LF	PROJECT DEMARCATION FENCE	653.55	2			
1						1		SF	TRAFFIC SIGNS, TYPE A	675.20	-			
21						21		LF	SQUARE TUBE SIGN POST AND ANCHOR	675.341	1			
2						2		EACH	DELINEATOR WITH STEEL POST	676.10	-			
			20			20		LF	SPECIAL PROVISION (CONCRETE ENCASED DUCT BANK, 6 DUCTS)(4")	900.640	1			
				234		234		LF	SPECIAL PROVISION (PRE-EXCAVATION OF INTEGRAL ABUTMENT PILES)	900.640	EST			
1500						1500		LF	SPECIAL PROVISION (TEMPORARY PEDESTRIAN SAFETY RAIL)	900.640	EST			
			1			1		LS	SPECIAL PROVISION (BRIDGE-MOUNTED DUCT BANK)	900.645	-			
1						1		LS	SPECIAL PROVISION (TRAFFIC CONTROL, ALL INCLUSIVE)	900.645	-			
			1			1		LS	SPECIAL PROVISION (WATER MAIN ON BRIDGE) (8")(CL 52)	900.645	-			
1						1		LU	SPECIAL PROVISION (MAT DENSITY PAY ADJUSTMENT, SMALL QUANTITY)(N.A.B.I.)	900.650	-			
1						1		LU	SPECIAL PROVISION (MIXTURE PAY ADJUSTMENT)(N.A.B.I.)	900.650	-			
160				172		332		TON	SPECIAL PROVISION (BITUMINOUS CONCRETE PAVEMENT, SMALL QUANTITY)	900.680	8			

PROJECT NAME: BENNINGTON
PROJECT NUMBER: BRF 1000(16)

FILE NAME:
PROJECT LEADER:
DESIGNED BY: D. BURHANS/S. KELLER
QUANTITY SHEET #3

PLOT DATE:
DRAWN BY: P. MCCLURE
CHECKED BY: D. BRYANT
SHEET 5 OF 75

STATE OF VERMONT
AGENCY OF TRANSPORTATION

EARTHWORKS

STATION	DIST	TOTAL EXCAVATION EARTH AND ROCK AREA S.F.	TOTAL EXCAVATION EARTH AND ROCK VOLUME C.Y.	ROCK EXCAVATION AREA S.F.	ROCK EXCAVATION VOLUME C.Y.	EMBANKMENT AREA S.F.	EMBANKMENT VOLUME C.Y.	AREA S.F.	VOLUME C.Y.
6+34.10	0	0	0	0	0	0	0		
7+27.12	93	0	75	0	4	1	2		
								CUT	156
9+97.43	0	0	0	0	0	6	0	ROCK	5
10+95.00	98	0	81	0	1	0	11	R.FAC	1
								FILL	13
								F.FAC	1
								EX. C	144

STATION	DIST	TOTAL EXCAVATION EARTH AND ROCK AREA S.F.	TOTAL EXCAVATION EARTH AND ROCK VOLUME C.Y.	ROCK EXCAVATION AREA S.F.	ROCK EXCAVATION VOLUME C.Y.	EMBANKMENT AREA S.F.	EMBANKMENT VOLUME C.Y.	AREA S.F.	VOLUME C.Y.
	FT.								

STATION	DIST	TOTAL EXCAVATION EARTH AND ROCK AREA S.F.	TOTAL EXCAVATION EARTH AND ROCK VOLUME C.Y.	ROCK EXCAVATION AREA S.F.	ROCK EXCAVATION VOLUME C.Y.	EMBANKMENT AREA S.F.	EMBANKMENT VOLUME C.Y.	AREA S.F.	VOLUME C.Y.
	FT.								

SUMMARY AND BALANCES

STATION TO STATION		TOT EXC. EARTH & ROCK C.Y.	ROCK EXCAV C.Y.	EMBANK C.Y.	EXCESSES CUT	EXCESSES FILL	ACUMULATIVE EXCESSES CUT	ACUMULATIVE EXCESSES FILL
6+34.10	7+27.12	79	4	2	77	0	0	0
9+97.43	10+95.00	82	1	11	71	0	148	0
TOTAL		161	5	13				

REMARKS

EARTH AND ROCK EXCAVATION	161
SOLID ROCK EXCAVATION	5
EARTH EXCAVATION	156
PLANIMETERED FILL	13
LESS FACTORED SOLID ROCK	7
LESS DISPLACEMENT OF ANY LARGE STRUCTURES	0
NET PLANIMETERED FILL	6
FACTOR	0.15
PLANIMETERED FILL INCLUDING FACTOR	7
MATERIALS AVAILABLE FOR FILLS	
EARTH EXCAVATION	156
CHANNEL EXCAVATION	0
COFFERDAM EXCAVATION	839
TRENCH EXCAVATION	222
UNDERDRAIN EXCAVATION	0
STRUCTURE EXCAVATION	734
TOTAL MATERIAL AVAILABLE FOR FILL	1951
TOTAL FILL INCLUDING FACTOR	7
TOTAL MATERIAL FOR FILL	1951
BORROW	0
EXCESS EXCAVATION	1944

STATE OF VERMONT
AGENCY OF TRANSPORTATION

DRAINAGE DETAIL SHEET

STATION	STATION	POS.	PIPE #	INLET/OUTLET TYPE INLET	INLET/OUTLET TYPE OUTLET	DITCH IN	DITCH OUT	PIPE ARCH SPAN IN	PIPE ARCH RISE IN	PIPE ARCH L FT	PIPE D IN	PIPE L FT	ALLOWABLE OPTIONS PCCSP TH	CAAP TH	RCP CL	CSP TH	CPEP SL	PCCSP PI TH	MH EA	PRCMH	CB EA	PRCDI	DEPTH DI FT	CONC CLASS B CY	REINF STEEL LBS	DI GRATE TYPE	CHAN ELEV EA	CRM CY	TRENCH EXCAVATION EARTH CY	TRENCH EXCAVATION ROCK CY	COMM EXC CY	UNC CHAN EXC CY	STRUCT EXCAV CY	GRAN BKFILL STRUCT CY	GRAN BORR CY	EROS MATT SY	STONE FILL CY	STONE FILL TYPE	MARKER POSTS LT EA	MARKER POSTS RT EA			REMARKS
6+86.56	7+05.02	LT	1	DI	MH					26 ~~25.95~~	18		.064	.060			X					1				E			25.5														NEW 18" PIPE - SEE PIPE PROFILE SHEET
7+08.07	7+62.59	LT	2	MH	Stone		X			52 ~~54.62~~	18		.064	.060			X			1						C			66.6											1				NEW 18" PIPE - SEE PIPE PROFILE SHEET;
10+26.13	10+46.19	RT - LT	3	DI	DI					34 ~~36.85~~	18		.064	.060			X					1				E			23.2														NEW 18" PIPE - SEE PIPE PROFILE SHEET
10+36.37	10+46.35	LT	4	DI	MH					22 ~~17.40~~	18		.064	.060			X					1				E			15.0														NEW 18" PIPE - SEE PIPE PROFILE SHEET
9+96.67	10+33.57	LT	5	MH	Stone		X			36 ~~38.80~~	18		.064	.060			X			1						C			27.3											1				NEW 18" PIPE - SEE PIPE PROFILE SHEET;
6+73.31	6+77.31	RT			Stone																															1.2	I					53
7+62.59	7+78.56	LT			Stone																															6.9	III					4'W X ~~3'~~ X 1'D STONE PAD 4'W X 15.6'L X ~~3'~~ STONE PAD 14.5
9+83.71	9+96.87	LT			Stone																															5.3	III					4'W X 11.9'L X ~~3'~~ STONE PAD 17.5

PROJECT NAME: BENNINGTON
PROJECT NUMBER: BRF 1000(16)

FILE NAME: z88j087bdr_ews.dgn
PROJECT LEADER: R. HEBERT
DESIGNED BY: T. KELLEY
EARTHWORK SUMMARY / ITEM DETAIL & DRAINAGE

PLOT DATE: 8/27/2014
DRAWN BY: J. DAVIS
CHECKED BY: D. BRYANT
SHEET 6 OF 75

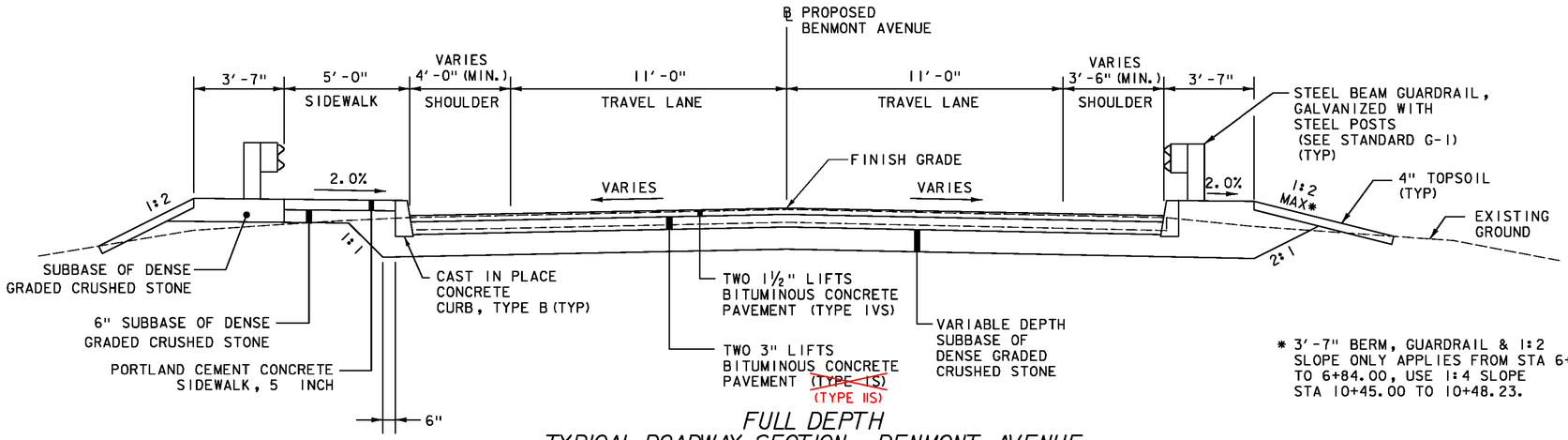

* 3'-7" BERM, GUARDRAIL & 1:2 SLOPE ONLY APPLIES FROM STA 6+77.31 TO 6+84.00, USE 1:4 SLOPE STA 10+45.00 TO 10+48.23.

FULL DEPTH
TYPICAL ROADWAY SECTION - BENMONT AVENUE

MATERIAL TOLERANCES

(IF USED ON PROJECT)

	TOTAL DEPTH
SURFACE	
- PAVEMENT	+/- ¼"
SUBBASE	+/- 1"
SAND BORROW	+/- 1"
GRANULAR BORROW	+/- 1"

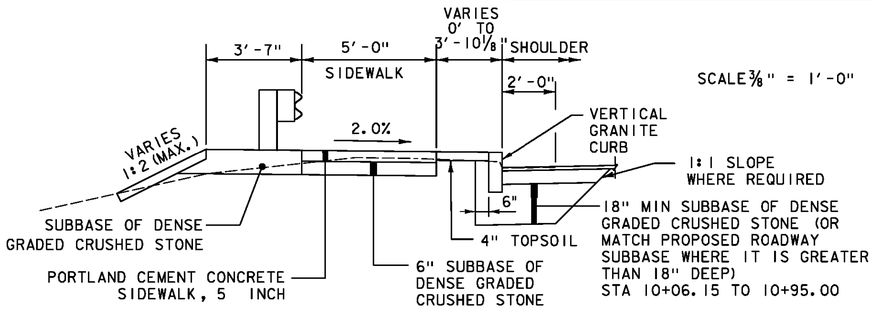

FULL DEPTH
CURB AND GUARDRAIL SECTION - LT

STA 10+06.15 TO STA 10+69.00

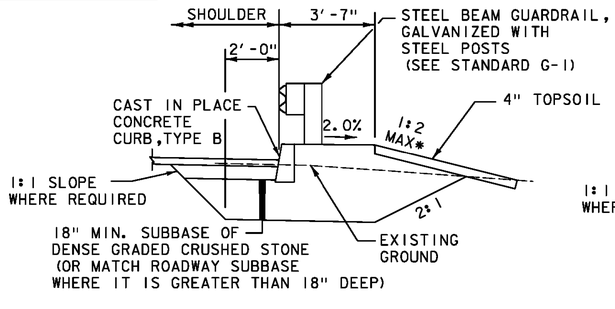

FULL DEPTH WIDENING
CONCRETE CURB AND GUARDRAIL SECTION - RT

STA 6+77.31 TO STA 7+02.70

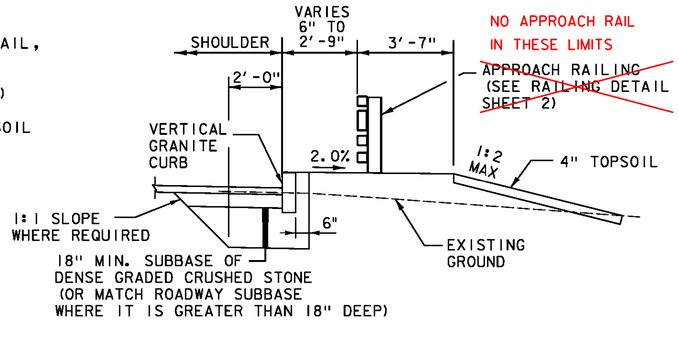

FULL DEPTH WIDENING
GRANITE CURB AND GUARDRAIL SECTION - RT

~~STA 9+87.16 TO STA 10+06.31~~
STA 10+07.00 TO STA 10+47.00

SCALE ⅜" = 1'-0"

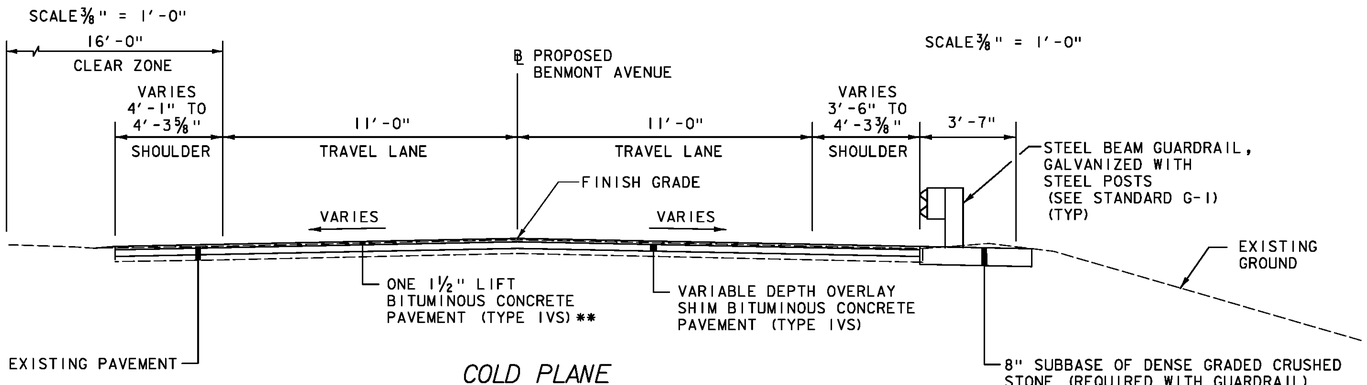

COLD PLANE
TYPICAL APPROACH SECTION - BENMONT AVENUE

SCALE ⅜" = 1'-0"

**ONE 1½" LIFT BITUMINOUS CONCRETE PAVEMENT (TYPE IVS) AND ONE 3" LIFT BITUMINOUS CONCRETE PAVEMENT (TYPE IS) STA 6+59.10 TO 6+84.10 AND STA 10+45.00 TO 10+70.00 (SEE PROFILE SHEET, SUBBASE TAPER DETAILS)

NOTES

1. DELINEATOR POSTS: TO BE PLACED IN ACCORDANCE WITH STANDARD SHEET T-40.
2. SLOPE ROUNDING: ALL CUT SLOPES TO BE ROUNDED IN ACCORDANCE WITH STANDARD SHEET B-5.
3. TACK COAT: EMULSIFIED ASPHALT SHALL BE APPLIED TO THE COLD PLANED BITUMINOUS CONCRETE PAVEMENT SURFACE AT THE RATE OF 0.040 GAL./SY. OR AS DIRECTED BY THE ENGINEER. EMULSIFIED ASPHALT SHALL ALSO BE APPLIED BETWEEN ALL LIFTS OF PAVEMENT. THE COST SHALL BE PAID UNDER ITEM 404.65, "EMULSIFIED ASPHALT".
4. SEE PROFILE SHEET, SUBBASE TAPER DETAILS, FOR SUBBASE AND PAVEMENT TRANSITION DETAILS.

PROJECT NAME: BENNINGTON
PROJECT NUMBER: BRF 1000(16)

FILE NAME: z88j087bdr_typ.dgn
PROJECT LEADER: R. HEBERT
DESIGNED BY: D. BURHANS
ROADWAY TYPICAL SECTIONS

PLOT DATE: 8/7/2014
DRAWN BY: J. DAVIS
CHECKED BY: D. BRYANT
SHEET 7 OF 75

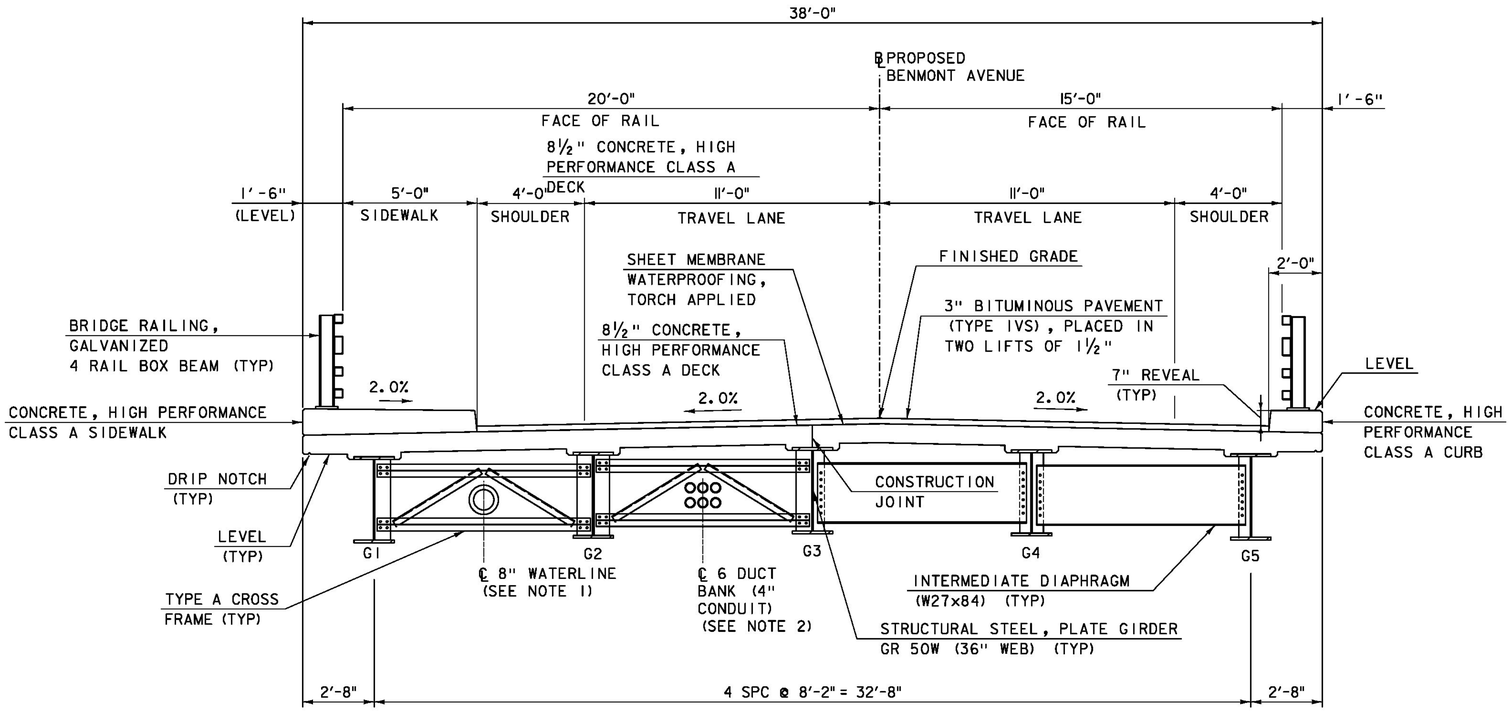

BRIDGE TYPICAL SECTION

SCALE ⅜" = 1'-0"

NOTES:

1. 8" WATERLINE PAID UNDER ITEM 900.645, "SPECIAL PROVISION (WATER MAIN ON BRIDGE)" (8") (CL 52)".
2. 6 DUCT BANK (4" CONDUIT) PAID UNDER ITEM 900.645, "SPECIAL PROVISION (BRIDGE-MOUNTED DUCT BANK)".

PROJECT NAME:	BENNINGTON
PROJECT NUMBER:	BRF 1000(16)
FILE NAME: z88J087bdr_btyp.dgn	PLOT DATE: 8/8/2014
PROJECT LEADER: R. HEBERT	DRAWN BY: S. MORGAN
DESIGNED BY: D. MYERS	CHECKED BY: R. HEBERT
BRIDGE TYPICAL SECTION	SHEET 8 OF 75

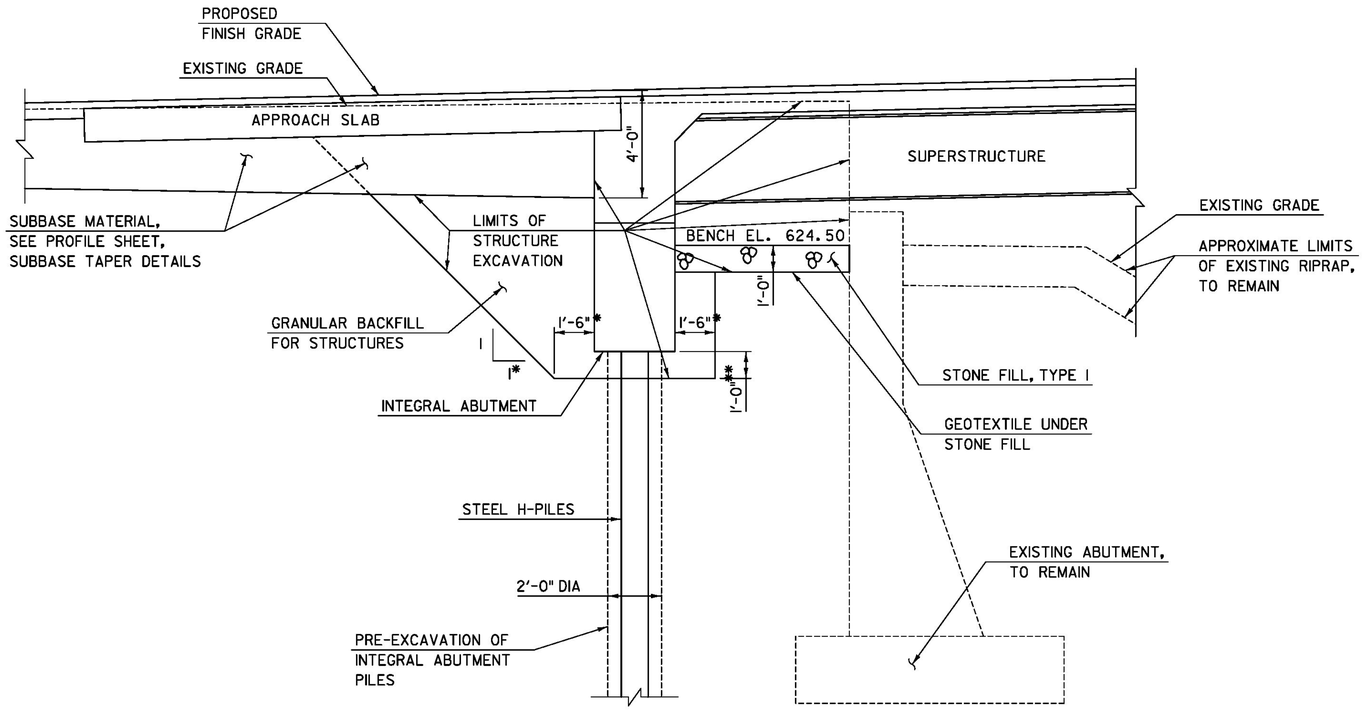

TYPICAL ABUTMENT SECTION

SCALE 3/8" = 1'-0"

* MEASURED NORMAL TO ABUTMENT
** ONE FOOT UNDERCUT AS DETERMINED NECESSARY BY THE ENGINEER

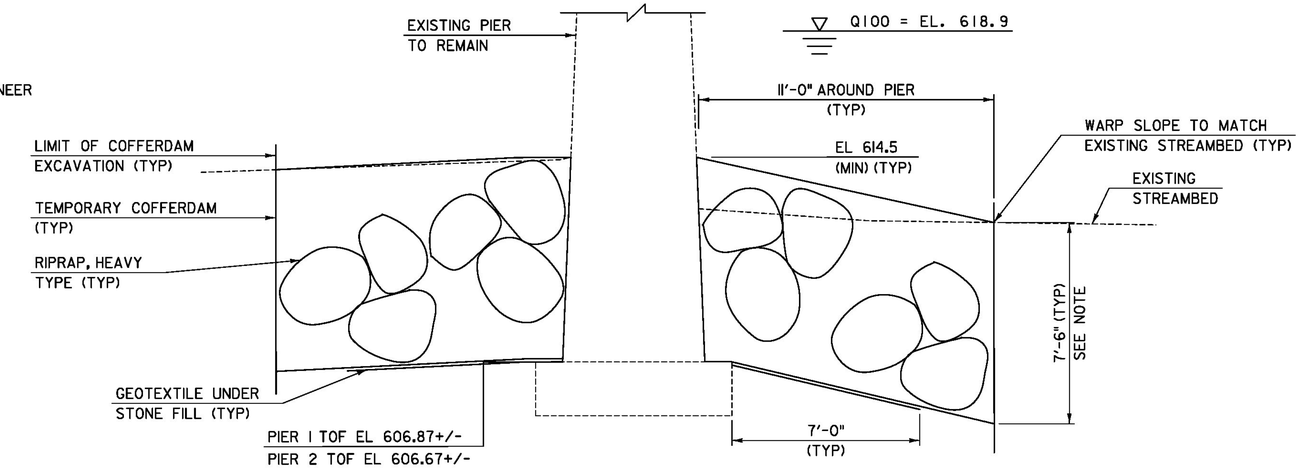

TYPICAL PIER SECTION

SCALE 3/8" = 1'-0"

NOTE:
EXCAVATION WITHIN THE COFFERDAM AND IMMEDIATE TO THE FOOTING SHALL NOT EXTEND BELOW THE TOP OF THE FOOTING ELEVATION.

PROJECT NAME:	BENNINGTON
PROJECT NUMBER:	BRF 1000(16)
FILE NAME: z88J087bdr_bew.dgn	PLOT DATE: 8/7/2014
PROJECT LEADER: R. HEBERT	DRAWN BY: S. MORGAN
DESIGNED BY: S. KELLER	CHECKED BY: R. HEBERT
EARTHWORK TYPICAL SECTIONS	SHEET 9 OF 75

GENERAL

1. ALL MATERIALS AND CONSTRUCTION SHALL CONFORM TO STATE OF VERMONT AGENCY OF TRANSPORTATION STANDARD SPECIFICATIONS FOR CONSTRUCTION DATED 2011, WITH ITS LATEST REVISIONS, AND THE AASHTO LRFD BRIDGE DESIGN SPECIFICATIONS, 6TH EDITION WITH INTERIMS THROUGH 2012.

2. THE BRIDGE IS DESIGNED FOR HL-93 LIVE LOADING.

3. ALL DIMENSIONS ARE HORIZONTAL OR VERTICAL AND ARE BASED ON 68° F OR AS NOTED OTHERWISE.

4. THE CONTRACTOR IS RESPONSIBLE FOR FIELD CHECKING ANY AND ALL DIMENSIONS AND ELEVATIONS APPLICABLE TO THIS WORK PRIOR TO COMMENCING WORK OR ORDERING MATERIAL.

5. ALL WORK SHALL TAKE PLACE WITHIN THE EXISTING RIGHT-OF-WAY. NO PROVISIONS HAVE BEEN MADE FOR THE CONTRACTOR TO PERFORM WORK OR SET UP STAGING OUTSIDE THE EXISTING RIGHT-OF-WAY.

6. THE TOWN WILL MAINTAIN RESPONSIBILITY FOR SNOW REMOVAL ON THE EXISTING BRIDGE THROUGHOUT THE DURATION OF THE PROJECT.

7. EXISTING FIBER OPTIC CABLE SHALL BE REMOVED AND PERMANENTLY RELOCATED BY OTHERS. CONTRACTOR SHALL COORDINATE ALL BRIDGE REPLACEMENT, CONDUIT INSTALLATION, AND APPROACH RECONSTRUCTION WORK WITH UTILITY RELOCATION WORK AS REQUIRED. SEE UTILITY SPECIAL PROVISIONS AND SHEETS 67-70 FOR ADDITIONAL INFORMATION AND REQUIREMENTS.

EARTHWORK AND RELATED ITEMS

8. ITEM 613.10 "STONE FILL, TYPE I", UNDER THE BRIDGE, AT THE ABUTMENTS AS SHOWN IN THE PLANS SHALL BE PLACED BEFORE THE NEW GIRDERS ARE SET.

9. ITEM 613.10, "STONE FILL, TYPE I" SHALL BE USED TO REPAIR AREAS OF EMBANKMENT AND SLOPE EROSION AS ORDERED BY THE ENGINEER AND TO CONSTRUCT STONE PADS (SEE EPSC SITE PLAN SHEET).

10. TEMPORARY CONSTRUCTION FILLS USED FOR ANY PURPOSE WITHIN THE WATERCOURSE SHALL CONSIST OF CLEAN STONE FILL ONLY. NO OTHER FILLING IN THE STREAM SHALL OCCUR WITHOUT THE APPROVAL OF THE STREAM ALTERATION ENGINEER.

11. DESIGN OF COFFERDAMS SHALL BE THE RESPONSIBILITY OF THE CONTRACTOR AND SHALL BE IN ACCORDANCE WITH STANDARD SPECIFICATION SECTION 208. PAYMENT WILL BE MADE UNDER THE SECTION 208 ITEMS IN THE CONTRACT.

CONCRETE

12. ALL PORTIONS OF THE SUPERSTRUCTURE, AND THE PORTION OF THE ABUTMENT ABOVE THE HORIZONTAL CONSTRUCTION JOINT LOCATED BELOW THE GIRDERS, SHALL BE "CONCRETE, HIGH PERFORMANCE CLASS A" (f'_c=4000 PSI).

13. THE ABUTMENT STEMS, PIER PEDESTALS, AND APPROACH SLABS SHALL BE "CONCRETE, HIGH PERFORMANCE CLASS B" (f'_c=3500 PSI).

14. ALL REINFORCING STEEL AND MECHANICAL CONNECTORS IN THE DECK, ABUTMENTS AND PIERS SHALL BE LEVEL II IN ACCORDANCE WITH SECTION 507 AND WILL BE PAID FOR UNDER CONTRACT ITEM 507.12. APPROACH SLAB REINFORCING STEEL SHALL BE LEVEL I IN ACCORDANCE WITH SECTION 507 AND WILL BE PAID FOR UNDER CONTRACT ITEM 507.11.

15. WATER REPELLENT, SILANE, SHALL BE APPLIED TO ALL EXPOSED CONCRETE SURFACES, INCLUDING EXISTING PIERS, EXCEPT THE UNDERSIDE OF THE DECK BETWEEN DRIP NOTCHES.

16. REINFORCEMENT PLACEMENT TOLERANCES SHALL BE AS FOLLOWS:
    - SPACING +/- 1"
    - CLEARANCE +/- ¼"

17. MINIMUM CLEAR COVER FOR REINFORCING STEEL SHALL BE AS FOLLOWS:
    - ALONG TOP SURFACE OF DECK SLAB 2.5 INCH
    - ALONG BOTTOM SURFACE OF DECK SLAB 1.5 INCH
    - SURFACES CAST AGAINST EARTH 3.0 INCH
    - CURBS AND SIDEWALKS 3.0 INCH
    - ELSEWHERE UNLESS NOTED OTHERWISE 2.0 INCH

18. WHEN POURING THE DECK, THE CONCRETE SHALL BE DEPOSITED PARALLEL TO THE CENTERLINE OF BEARING SO AS TO LOAD THE GIRDERS EQUALLY.

19. THE BRIDGE DECK CONCRETE FOR EACH PHASE SHALL BE PLACED IN ONE CONTINUOUS POUR AND REMAIN PLASTIC THROUGHOUT THE ENTIRE POUR.

20. THE KEY-IN CONSTRUCTION JOINTS SHALL BE MONOLITHIC AND CONTINUOUS FOR THE FULL LENGTH OF THE JOINTS.

21. REINFORCING STEEL SHALL CONFORM TO AASHTO M 31, GRADE 420 (GRADE 60) AND SHALL BE DETAILED AND FABRICATED USING PROCEDURES AND TOLERANCES IN ACCORDANCE WITH APPLICABLE PUBLICATIONS OF THE CONCRETE REINFORCING STEEL INSTITUTE (CRSI).

22. PIER CONCRETE REPAIRS SHALL BE PERFORMED IN ACCORDANCE WITH THE CONTRACT DOCUMENTS. A THOROUGH INSPECTION BY THE ENGINEER WILL BE MADE OF ALL PIER SUBSTRUCTURE AREAS PRIOR TO COMMENCING ANY WORK. THOSE AREAS FOUND TO HAVE SPALLED, DELAMINATED, OR UNSOUND CONCRETE WILL BE REPAIRED. THE CONTRACTOR SHALL SUPPLY ANY STAGING REQUIRED FOR THIS INSPECTION, THE COST FOR WHICH SHALL BE INCIDENTAL TO ALL OTHER ITEMS IN THE CONTRACT.

23. ALL REINFORCING STEEL LAP LENGTHS WERE DESIGNED ASSUMING DUAL-COATED STEEL.

PILE FOUNDATIONS

24. THE PILES SHALL BE HP 12 X 84. ESTIMATED PILE LENGTH IS 24 FT PER PILE AT ABUTMENT 1 AND 29 FT PER PILE AT ABUTMENT 2.

25. PILE SHOES ARE REQUIRED AND SHALL CONFORM TO SUBSECTION 505.04(F) OF THE STANDARD SPECIFICATIONS.

26. THE TOPS OF PILES AFTER DRIVING SHALL NOT VARY FROM THE PLAN POSITION BY MORE THAN 3 INCHES. THE PILE ORIENTATION SHALL NOT VARY BY MORE THAN 5 DEGREES. PRIOR TO BEGINNING DRIVING OPERATIONS, THE CONTRACTOR SHALL DEMONSTRATE TO THE SATISFACTION OF THE ENGINEER HOW THE TOLERANCES WILL BE MET REGARDLESS OF INSTALLATION METHOD.

27. THE PILES SHALL BE DRIVEN TO A NOMINAL RESISTANCE OF 365 KIPS AS DETERMINED BY THE RESULTS OF DYNAMIC TESTING, AS INTERPRETED BY THE ENGINEER.

28. FOR ESTIMATING PURPOSES, THE PILE TIP ELEVATIONS WERE ASSUMED AS SHOWN ON THE BORING LOGS. THE ACTUAL LENGTHS MAY VARY.

29. TO ENSURE THAT THE NOMINAL RESISTANCE HAS BEEN ATTAINED AND TO PREVENT THE OVERSTRESSING OF THE PILES DURING DRIVING OPERATIONS, DYNAMIC TESTING SHALL BE PERFORMED IN ACCORDANCE WITH SUBSECTION 505.04(d)-2 OF THE STANDARD SPECIFICATIONS. A PILE TEST SHALL BE CONDUCTED ON THE FIRST PILE DRIVEN AT EACH ABUTMENT. MORE TESTS MAY BE REQUIRED BY THE ENGINEER. PAY ITEM FOR THESE TESTS IS 505.45 "DYNAMIC PILE LOAD TEST."

30. DUE TO THE PRESENCE OF COBBLES AND BOULDERS, THE CONTRACTOR IS REQUIRED TO PRE-EXCAVATE MATERIAL TO BEDROCK PRIOR TO DRIVING PILES.

31. PAYMENT FOR PRE-EXCAVATION FOR PILES SHALL BE UNDER ITEM 900.640 "SPECIAL PROVISION (PRE-EXCAVATION OF INTEGRAL ABUTMENT PILES)".

REMOVAL OF EXISTING STRUCTURE

32. PARTIAL REMOVAL OF THE EXISTING STRUCTURE SHALL BE UNDER ITEM 529.20, "PARTIAL REMOVAL OF STRUCTURE". THIS WORK SHALL INCLUDE REMOVAL OF THE SUPERSTRUCTURE, ABUTMENT DIAPHRAGM, WINGWALLS DOWN TO THE EXISTING BRIDGE SEAT ELEVATION, AND PARTIAL REMOVAL OF THE EXISTING PIERS. THE CONTRACTOR'S METHODS FOR PARTIAL REMOVAL OF THE EXISTING STRUCTURE SHALL BE APPROVED BY THE ENGINEER PRIOR TO ANY REMOVAL WORK.

33. THE EXISTING STRUCTURAL STEEL AND BEARINGS TO BE REMOVED ON THIS PROJECT ARE PAINTED WITH A MATERIAL WHICH MAY CONTAIN LEAD. THE EXISTING STEEL IS TO BECOME THE PROPERTY OF THE CONTRACTOR AND THE CONTRACTOR MAY DISPOSE OF IT OR RETAIN IT FOR FUTURE USE. THE CONTRACTOR WILL INFORM THE ENGINEER OF THEIR PLANS TO DISPOSE OF OR RETAIN THE STEEL PRIOR TO ITS REMOVAL. THE CONTRACTOR SHALL FOLLOW ALL APPLICABLE REGULATIONS WHEN HANDLING AND WORKING WITH THIS STEEL. THE CONTRACTOR SHALL INDEMNIFY AND HOLD THE STATE, ITS OFFICERS, AND ITS EMPLOYEES HARMLESS CONCERNING THE CONTRACTOR'S USE OR DISPOSITION OF THE REMOVED STRUCTURAL STEEL.

34. PAYMENT FOR MAINTAINING PORTIONS OF THE EXISTING STRUCTURE AND ROADWAY FOR ACCEPTABLE USE DURING PHASED CONSTRUCTION WILL BE MADE UNDER CONTRACT ITEM 527.10 "MAINTENANCE OF STRUCTURES AND APPROACHES."

STRUCTURAL STEEL

35. ALL STRUCTURAL STEEL SHALL BE PAID FOR UNDER ITEM 506.55 "STRUCTURAL STEEL, PLATE GIRDER" AND SHALL CONFORM TO AASHTO M-270 GRADE 50W (UNPAINTED) UNLESS OTHERWISE NOTED IN THE PLANS.

36. THE WEB, TOP FLANGE, BOTTOM FLANGE, AND FIELD SPLICE PLATES OF THE GIRDERS SHALL BE CHARPY V-NOTCH TESTED IN ACCORDANCE WITH SUBSECTION 714.01.

37. BOLTS USED IN FIELD CONNECTIONS SHALL BE TYPE 3, 7/8" DIA., AND MEET THE REQUIREMENTS OF SUBSECTION 714.05. HOLE DIAMETERS SHALL BE 15/16". ANY CONNECTIONS NOT DESIGNED SHALL BE DETAILED BY THE FABRICATOR AND SUBMITTED TO THE STRUCTURES ENGINEER FOR APPROVAL.

38. AFTER SUPERSTRUCTURE STEEL HAS BEEN ERECTED, ELEVATIONS ALONG THE TOP OF THE GIRDERS SHALL BE TAKEN AS DIRECTED BY THE ENGINEER FOR USE IN DETERMINING FINISHED GRADES.

39. FLEMING BRACKETS OR SIMILAR FALSEWORK SHALL BE SPACED AS REQUIRED BY DESIGN, BUT SHALL BE LIMITED TO A MAXIMUM SPACING OF 4' 0". THE DESIGN OF FALSEWORK SHALL BE THE RESPONSIBILITY OF THE CONTRACTOR.

40. ANY BOLT HOLES IN THE WEBS OF FASCIA GIRDERS NOT OTHERWISE FILLED SHALL BE FILLED WITH BUTTON HEAD OR HEX HEAD TYPE 3 BOLTS. THE BOLTS SHALL BE TIGHTENED IN ACCORDANCE WITH SUBSECTION 506.19 OF THE STANDARD SPECIFICATIONS.

41. ENDS OF GIRDERS SHALL BE VERTICAL IN THEIR FINAL POSITION.

42. DUE TO STABILITY CONCERNS AT THE ABUTMENTS DURING THE ERECTION OF THE SUPERSTRUCTURE, THE CONTRACTOR SHALL SUBMIT THE ERECTION PLAN A MINIMUM OF 30 WORKING DAYS PRIOR TO ERECTING THE SUPERSTRUCTURE.

ELASTOMERIC BEARINGS

43. ELASTOMER COMPOUND SHALL HAVE A NOMINAL HARDNESS OF 60 ON THE SHORE A SCALE, AND SHALL CONFORM TO SUBSECTION 731.03.

44. STEEL REINFORCEMENT FOR THE ELASTOMERIC BEARING PADS SHALL CONFORM TO SECTION 506 FOR GRADE 50 STEEL.

45. BEARINGS SHOULD BE INSTALLED AT TEMPERATURES BETWEEN 20 DEGREES F AND 70 DEGREES F. INSTALLATION TEMPERATURES OUTSIDE THIS RANGE WILL REQUIRE ADJUSTMENT.

PROJECT NAME:	BENNINGTON
PROJECT NUMBER:	BRF 1000(16)
FILE NAME: z881087bdr_notes.dgn	PLOT DATE: 8/29/2014
PROJECT LEADER: R. HEBERT	DRAWN BY: D. MYERS
DESIGNED BY: D. MYERS	CHECKED BY: R. HEBERT
PROJECT NOTES	SHEET 10 OF 75

GENERAL INFORMATION

SYMBOLOGY LEGEND NOTE

THE SYMBOLOGY ON THIS SHEET IS INTENDED TO COVER STANDARD CONVENTIONAL SYMBOLOGY. THE SYMBOLOGY IS USED FOR EXISTING & PROPOSED FEATURES WITH HEAVIER LINEWEIGHT, IN COMBINATION WITH PROJECT ANNOTATION, AS NOTED ON PROJECT PLAN SHEETS. THIS LEGEND SHEET COVERS THE BASICS. SYMBOLOGY ON PLANS MAY VARY, PLAN ANNOTATIONS AND NOTES SHOULD BE USED TO CLARIFY AS NEEDED.

R.O.W. ABBREVIATIONS (CODES) & SYMBOLS

POINT	CODE	DESCRIPTION
	CH	CHANNEL EASEMENT
	CONST	CONSTRUCTION EASEMENT
	CUL	CULVERT EASEMENT
	D&C	DISCONNECT & CONNECT
	DIT	DITCH EASEMENT
	DR	DRAINAGE EASEMENT
	DRIVE	DRIVEWAY EASEMENT
	EC	EROSION CONTROL
	HWY	HIGHWAY EASEMENT
	I&M	INSTALL & MAINTAIN EASEMENT
	LAND	LANDSCAPE EASEMENT
	R&RES	REMOVE & RESET
	R&REP	REMOVE & REPLACE
	SR	SLOPE RIGHT
	UE	UTILITY EASEMENT
	(P)	PERMANENT EASEMENT
	(T)	TEMPORARY EASEMENT
■	BNDNS	BOUND SET
⊡	BNDNS	BOUND TO BE SET
●	IPNS	IRON PIN SET
◎	IPNS	IRON PIN TO BE SET
⊠	CALC	EXISTING ROW POINT
○	PROW	PROPOSED ROW POINT
[LENGTH]		LENGTH CARRIED ON NEXT SHEET

COMMON TOPOGRAPHIC POINT SYMBOLS

POINT	CODE	DESCRIPTION
	APL	BOUND APPARENT LOCATION
	BM	BENCH MARK
	BND	BOUND
	CB	CATCH BASIN
	COMB	COMBINATION POLE
	DITHR	DROP INLET THROATED DNC
	EL	ELECTRIC POWER POLE
	FPOLE	FLAGPOLE
	GASFIL	GAS FILLER
	GP	GUIDE POST
	GSO	GAS SHUT OFF
	GUY	GUY POLE
	GUYW	GUY WIRE
	GV	GATE VALUE
	H	TREE HARDWOOD
	HCTRL	CONTROL HORIZONTAL
	HVCTRL	CONTROL HORIZ. & VERTICAL
	HYD	HYDRANT
	IP	IRON PIN
	IPIPE	IRON PIPE
	LI	LIGHT - STREET OR YARD
	MB	MAILBOX
	MH	MANHOLE (MH)
	MM	MILE MARKER
	PM	PARKING METER
	PMK	PROJECT MARKER
	POST	POST STONE/WOOD
	RRSIG	RAILROAD SIGNAL
	RRSL	RAILROAD SWITCH LEVER
	S	TREE SOFTWOOD
	SAT	SATELLITE DISH
	SHRUB	SHRUB
	SIGN	SIGN
	STUMP	STUMP
	TEL	TELEPHONE POLE
	TIE	TIE
	TSIGN	SIGN W/DOUBLE POST
	VCTRL	CONTROL VERTICAL
	WELL	WELL
	WSO	WATER SHUT OFF

THESE ARE COMMON VAOT SURVEY POINT SYMBOLS FOR EXISTING FEATURES, ALSO USED FOR PROPOSED FEATURES WITH HEAVIER LINEWEIGHT, IN COMBINATION WITH PROPOSED ANNOTATION.

PROPOSED GEOMETRY CODES

CODE	DESCRIPTION
PC	POINT OF CURVATURE
PI	POINT OF INTERSECTION
CC	CENTER OF CURVE
PT	POINT OF TANGENCY
PCC	POINT OF COMPOUND CURVE
PRC	POINT OF REVERSE CURVE
POB	POINT OF BEGINNING
POE	POINT OF ENDING
STA	STATION PREFIX
AH	AHEAD STATION SUFFIX
BK	BACK STATION SUFFIX
D	CURVE DEGREE OF (100FT)
R	CURVE RADUIS OF
T	CURVE TANGENT LENGTH
L	CURVE LENGTH OF
E	CURVE EXTERNAL DISTANCE

UTILITY SYMBOLOGY

UNDERGROUND UTILITIES

- UT — TELEPHONE
- UE — ELECTRIC
- UC — CABLE (TV)
- UEC — ELECTRIC+CABLE
- UET — ELECTRIC+TELEPHONE
- UCT — CABLE+TELEPHONE
- UECT — ELECTRIC+CABLE+TELEP.
- G — GAS LINE
- W — WATER LINE
- S — SANITARY SEWER (SEPTIC)

ABOVE GROUND UTILITIES (AERIAL)

- T — TELEPHONE
- ELECTRIC
- C — CABLE (TV)
- ELECTRIC+CABLE
- ELECTRIC+TELEPHONE
- ELECTRIC+TELEPHONE
- CT — CABLE+TELEPHONE
- ELECTRIC+CABLE+TELEP.
- UTILITY POLE GUY WIRE

PROJECT CONSTRUCTION SYMBOLOGY

PROJECT DESIGN & LAYOUT SYMBOLOGY

- CZ — CLEAR ZONE
- PLAN LAYOUT MATCHLINE

PROJECT CONSTRUCTION FEATURES

- TOP OF CUT SLOPE
- TOE OF FILL SLOPE
- STONE FILL
- BOTTOM OF DITCH ℄
- CULVERT PROPOSED
- STRUCTURE SUBSURFACE
- PDF — PROJECT DEMARCATION FENCE
- BF — BARRIER FENCE
- TREE PROTECTION ZONE (TPZ)
- STRIPING LINE REMOVAL
- SHEET PILES

CONVENTIONAL BOUNDARY SYMBOLOGY

BOUNDARY LINES

- TOWN LINE — TOWN BOUNDARY LINE
- COUNTY LINE — COUNTY BOUNDARY LINE
- STATE LINE — STATE BOUNDARY LINE
- PROPOSED STATE R.O.W. (LIMITED ACCESS)
- PROPOSED STATE R.O.W.
- STATE ROW (LIMITED ACCESS)
- STATE ROW
- TOWN ROW
- PERMANENT EASEMENT LINE (P)
- TEMPORARY EASEMENT LINE (T)
- SURVEY LINE
- P/L — PROPERTY LINE (P/L)
- SR SR SR — SLOPE RIGHTS
- 6F — 6F PROPERTY BOUNDARY
- 4F — 4F PROPERTY BOUNDARY
- HAZ — HAZ HAZARDOUS WASTE

EPSC LAYOUT PLAN SYMBOLOGY

EPSC MEASURES

- FILTER CURTAIN
- SILT FENCE
- SILT FENCE WOVEN WIRE
- CHECK DAM
- DISTURBED AREAS REQUIRING RE-VEGETATION
- EROSION MATTING

ENVIRONMENTAL RESOURCES

- WETLAND BOUNDARY
- RIPARIAN BUFFER ZONE
- WETLAND BUFFER ZONE
- SOIL TYPE BOUNDARY
- T&E — THREATENED & ENDANGERED SPECIES
- HAZ — HAZ — HAZARDOUS WASTE AREA
- AG — AGRICULTURAL LAND
- HABITAT — FISH & WILDLIFE HABITAT
- FLOOD PLAIN — FLOOD PLAIN
- OHW — ORDINARY HIGH WATER (OHW)
- STORM WATER
- USDA FOREST SERVICE LANDS
- WILDLIFE HABITAT SUIT/CONN

ARCHEOLOGICAL & HISTORIC

- ARCH — ARCHEOLOGICAL BOUNDARY
- HISTORIC DIST — HISTORIC DISTRICT BOUNDARY
- HISTORIC — HISTORIC AREA
- (H) HISTORIC STRUCTURE

CONVENTIONAL TOPOGRAPHIC SYMBOLOGY

EXISTING FEATURES

- ROAD EDGE PAVEMENT
- ROAD EDGE GRAVEL
- DRIVEWAY EDGE
- DITCH
- FOUNDATION
- FENCE (EXISTING)
- FENCE WOOD POST
- FENCE STEEL POST
- GARDEN
- ROAD GUARDRAIL
- RAILROAD TRACKS
- CULVERT (EXISTING)
- STONE WALL
- WALL
- WOOD LINE
- BRUSH LINE
- HEDGE
- BODY OF WATER EDGE
- LEDGE EXPOSED

PROJECT NAME:	BENNINGTON
PROJECT NUMBER:	BRF 1000(16)
FILE NAME: z881087bdr_legend.dgn	PLOT DATE: 8/7/2014
PROJECT LEADER: R. HEBERT	DRAWN BY: S. MORGAN
DESIGNED BY: T. POULIN	CHECKED BY: D. MYERS
CONVENTIONAL SYMBOLOGY LEGEND	SHEET 11 OF 75

GPS CONTROL POINTS

B95004

NORTH = 43470.73
EAST = 443429.60
ELEV. = 205.87

DESCRIBED BY VERMONT AGENCY OF TRANSPORTATION 1995 (CHR) GENERAL LOCATION, BENNINGTON, VT. TO REACH FROM THE INTERSECTION OF U.S.ROUTE 7 AND VT ROUTE 9 IN BENNINGTON GO NORTH ALONG U.S.ROUTE 7 FOR 0.4 MI (0.6 KM) TO THE INTERSECTION OF COUNTY STREET. TURN RIGHT AND GO EAST ALONG COUNTY STREET FOR 0.2 MI (0.3 KM) TO THE INTERSECTION OF PARK STREET. TURN LEFT AND GO NORTH ALONG PARK STREET FOR 0.3 MI (0.5 KM) TO THE SOUTH END OF THE PARK STREET BRIDGE OVER THE ROARING BRANCH AND THE MARK ON THE RIGHT IN THE TOP OF THE ABUTMENT AT THE SOUTHEAST CORNER OF THE BRIDGE. THE MARK IS 0.15 M (0.49 FT) SOUTH OF THE NORTH FACE OF THE ABUTMENT, 2.0 M (6.6 FT) EAST OF THE WEST FACE OF THE CURB, 0.45 M (1.48 FT) WEST OF THE EAST END OF THE ABUTMENT, AND ABOUT 0.2 M (0.7 FT) HIGHER THAN THE ROAD. NOTE, THIS MARK IS INTERVISIBLE WITH B95005

B95005

NORTH = 43020.12
EAST = 443399.56
ELEV. = 208.09

DESCRIBED BY VERMONT AGENCY OF TRANSPORTATION 1995 (CHR) GENERAL LOCATION, BENNINGTON, VT. TO REACH FROM THE INTERSECTION OF U.S.ROUTE 7 AND VT ROUTE 9 IN BENNINGTON GO NORTH ALONG U.S.ROUTE 7 FOR 0.4 MI (0.6 KM) TO THE INTERSECTION OF COUNTY STREET. TURN RIGHT AND GO EAST ALONG COUNTY STREET FOR 0.2 MI (0.3 KM) TO THE INTERSECTION OF PARK STREET. TURN LEFT AND GO NORTH ALONG PARK STREET FOR 0.1 MI (0.2 KM) TO THE MARK ON THE RIGHT IN A LAWN, JUST SOUTH OF THE MOST SOUTHERLY ENTRANCE DRIVE TO MOUNT ANTHONY HIGH SCHOOL. THE MARK IS SET 20 CM BELOW GROUND SURFACE IN THE TOP OF A 30 CM DIAMETER CONCRETE MONUMENT ANCHORED TO ROCK AT A DEPTH OF 1 M (3.3 FT). IT IS 5.8 M (19.0 FT) EAST OF AND ABOUT LEVEL WITH THE CENTERLINE OF PARK STREET, 13.3 M (43.6 FT) SOUTH OF THE CENTERLINE OF THE MOST SOUTHERLY ENTRANCE DRIVE TO THE HIGH SCHOOL, 25.0 M (82.0 FT) WEST OF A 60 CM MAPLE, 30.3 M (99.4 FT) WEST OF THE JUNCTION OF PAVED AND CONCRETE SIDEWALKS, AND 9.2 M (30.2 FT) NORTH OF POLE NO.2/18 AND A FIBERGLASS WITNESS POST. NOTE, THIS MARK IS INTERVISIBLE WITH B95004 AND THE BENNINGTON BATTLE MONUMENT.

* TO ALLOW THE STATE PLANE COORDINATES TO FIT THE AGENCY DESIGN PLANE, SUBTRACT 40,000.00 FROM THE NORTHINGS AND 400,000.00 FROM THE EASTINGS

TRAVERSE TIES

HVCTRL #1

NORTH = 2669.86
EAST = 52721.88
ELEV. = 636.13

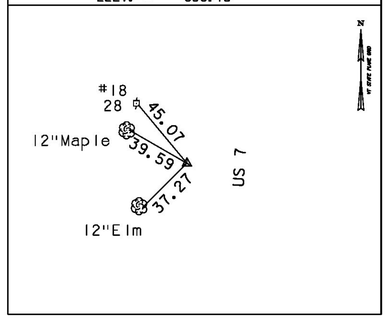

HVCTRL #2

NORTH = 4385.23
EAST = 52808.84
ELEV. = 639.04

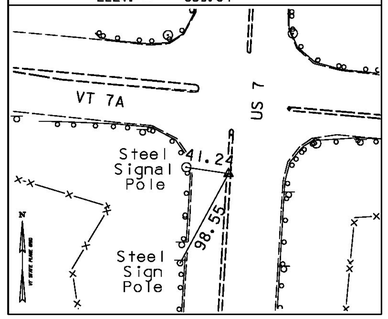

HVCTRL #3

NORTH = 4631.37
EAST = 52105.83
ELEV. = 622.94

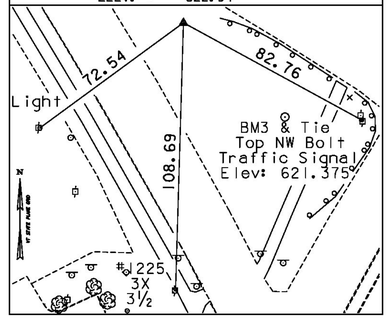

HVCTRL #4

NORTH = 4237.39
EAST = 52212.60
ELEV. = 630.32

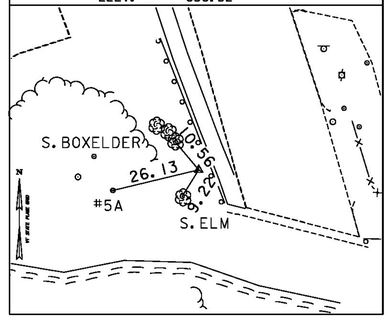

HVCTRL #5

NORTH = 3971.96
EAST = 52335.33
ELEV. = 630.61

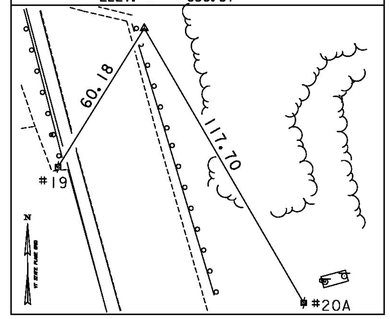

* Main Traverse Completed 3/16/98 by L.Orvis P.C. & R.Bullock

HVCTRL #6

NORTH = 3385.35
EAST = 52539.55
ELEV. = 629.64

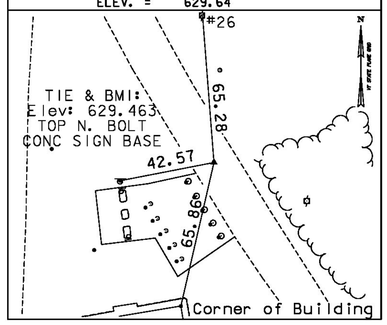

HVCTRL #7

NORTH = 3156.94
EAST = 52707.27
ELEV. = 635.04

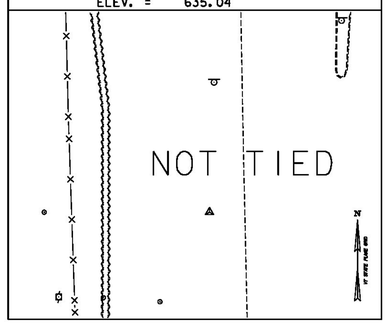

NORTH =
EAST =
ELEV. =

NORTH =
EAST =
ELEV. =

NORTH =
EAST =
ELEV. =

DATUM
VERTICAL NAVD 88
HORIZONTAL NAD 83 (92)
ADJUSTMENT COMPASS

PROJECT NAME: BENNINGTON
PROJECT NUMBER: BRF 1000(16)

FILE NAME: z88J087bdr_tl.dgn
PROJECT LEADER: R. HEBERT
DESIGNED BY: VTRANS
TIE SHEET

PLOT DATE: 8/7/2014
DRAWN BY: R. BULLOCK
CHECKED BY: VTRANS
SHEET 12 OF 75

ALIGNMENT TIES

PC 6+17.43

NORTH = 3865.63
EAST = 52343.57

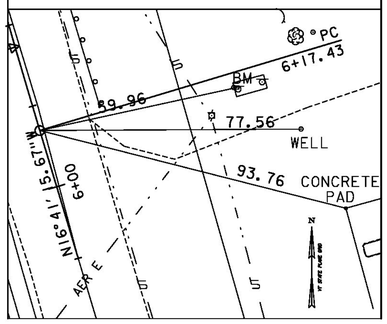

PT 6+69.11

NORTH = 3915.26
EAST = 52329.16

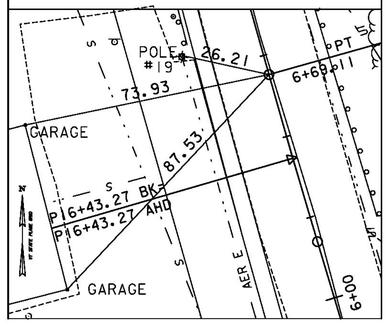

PC 9+97.02

NORTH = 4230.93
EAST = 52240.43

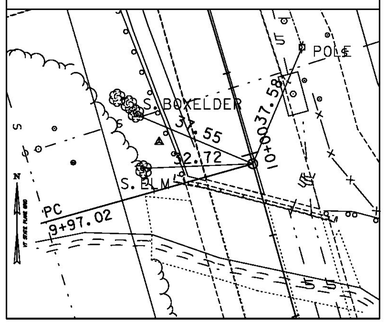

PT 11+33.31

NORTH = 4360.97
EAST = 52199.68

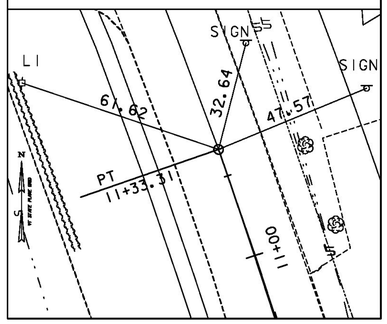

DATUM

VERTICAL NAVD 88

HORIZONTAL NAD 83 (92)

ADJUSTMENT COMPASS

PROJECT NAME: BENNINGTON
PROJECT NUMBER: BRF 1000(16)

FILE NAME: z881087bdr_ti.dgn
PROJECT LEADER: R. HEBERT
DESIGNED BY: D. BURHANS
ALIGNMENT TIE SHEET

PLOT DATE: 8/7/2014
DRAWN BY: D. BURHANS
CHECKED BY: D. BRYANT
SHEET 13 OF 75

RECORD PLANS

ANCHOR FOR STEEL BEAM RAIL
6+95 ~~6+25.50~~, RT
6+94 ~~6+95.93~~, LT
10+52 ~~10+45.29~~, LT

GUARDRAIL APPROACH SECTION, GALVANIZED 4 RAIL BOX BEAM
6+85.91, RT - 7+18.91, RT
7+06.10, LT - 7+39.10, LT
9+86.21, RT - 10+05.41, 17.26' RT
10+07.44, LT - 10+40.58, LT

CAST-IN-PLACE CONCRETE CURB, TYPE B
6+64 ~~6+77.27~~, RT - ~~6+98.75~~, RT 6+86
6+64 ~~6+79.32~~, LT - ~~7+15.78~~, LT 7+16

CONSTRUCT DRIVE
10+69.07, RT 42' PAVED

VERTICAL GRANITE CURB
10+07 ~~10+07.85~~, RT - ~~10+48.37~~, RT 10+47
10+25 ~~10+25.22~~, LT - ~~10+95.00~~, LT 10+67

REMOVAL OF EXISTING CURB
9+86.42, RT - 9+89.62, RT
10+16.86, RT - 10+20.27, RT

STEEL BEAM GUARDRAIL, GALVANIZED
6+92 ~~6+09.42~~, RT - ~~6+85.91~~, RT 6+86
6+91 ~~6+83.43~~, LT - ~~7+06.10~~, LT 7+06
10+90 ~~10+40.58~~, LT - ~~10+49.15~~, LT 10+55

REMOVAL AND DISPOSAL OF GUARDRAIL
6+19.51, RT - 7+24.91, RT
6+84.24, LT - 7+45.93, LT
9+71.27, RT - 9+77.86, RT
9+99.26, LT - 10+52.04, LT

PORTLAND CEMENT CONCRETE SIDEWALK, 5 INCH
6+64 ~~6+79.32~~, LT - ~~7+34.63~~, LT 7+16
10+27 ~~10+06.15~~, LT - ~~10+55.00~~, LT 10+68

DETECTABLE WARNING SURFACE
~~6+79.32, LT~~ Not Used

TOPSOIL AND SEED - approx
6+34.10, RT - 7+13.31, RT
~~6+80.00, LT - 7+43.25, LT~~
9+83.04, RT - 10+48.25, RT
10+13.17, LT - 10+95.00, LT

BRIDGE RAILING, GALVANIZED 4 RAIL BOX BEAM
7+18.91, RT - 9+87.16, RT
7+39.10, LT - 10+07.44, LT

CURVE #2
DELTA = 3°23'43"
D = 2°29'28"
R = 2300.00'
T = 68.17'
L = 136.30'
E = 1.01'
BANK = VARIES FT/FT
(TRANSITION TO EXISTING)

VT STATE PLANE GRID N

HUNT STREET

WALLOOMSAC RIVER

STA. 7+07.12
END APPROACH
BEGIN PROJECT
BRF 1000(16)

5+85
STA. 6+34.10
BEGIN APPROACH
MATCH EXISTING PAVEMENT

PI 6+43.27 BK=
PI 6+43.27 AHD

GUARDRAIL END TREATMENT (GI-d)

6+64
STA 6+79.32
MATCH EXISTING SIDEWALK

SIDEWALK RAMP, TYPE I

TO BENNINGTON
N16°41'5.67"W

6+00 7+00 8+00 9+00 10+00 11+00

℄ PROPOSED BENMONT AVE

30° (TYP)

℄ BRG ABUT. NO.1

STONE FILL, TYPE I (TYP)

PT 50+00.00

C.L. Bearing at ℄ EXISTING PIER NO.1

C.L. Bearing at ℄ EXISTING PIER NO.2

POE 51+50.00

51+50

CHANNEL LINE N76°23'45.23"W

51+00

STA. 9+96.28
END BRIDGE

PROPOSED BRIDGE

60°41'43"

N15°42'02.39"W

61°5'44"

50+00

PC 9+97.02

HVCTRL#4

68

℄ BRG ABUT. NO.2

STA 10+69.00
MATCH EXISTING SIDEWALK

GUARDRAIL END TREATMENT (GI-d)

4+29.93

BENMONT AVENUE
STA. ~~10+95.00~~ 12+30
END APPROACH
MATCH EXISTING PAVEMENT

PT 11+33.31

TO NORTH BENNINGTON
N19°05'45.56"W

GUARDRAIL END TREATMENT (GI-d)
R=16'

Stone Ditch Extended

6+69.11 PT

6+17.43 PC

STA. 7+27.12
BEGIN BRIDGE

EXISTING BRIDGE

RIPRAP, HEAVY TYPE (TYP)

HVCTRL#5

N8°47'46.31"W

POB 49+00.00

49+00

EXISTING FIBER OPTIC LINE TO BE RELOCATED BY OTHERS

PROPOSED BENMONT AVE.
STA 8+60.17 = CHANNEL STA 50+00.00

GUARDRAIL APPROACH SECTION, GALVANIZED 4 RAIL BOX BEAM (SEE RAILING DETAIL SHEET 2) (TYP)

STA. 10+16.32
END PROJECT
BRF 1000(16)
BEGIN APPROACH

PI 10+65.19 BK=
PI 10+65.15 AHD

EXISTING ROW (TYP)

CURVE #1
DELTA = 0°59'13"
D = 1°54'35"
R = 3000.00'
T = 25.84'
L = 51.68'
E = 0.11'

NEW DRAINAGE

1. 6+86.56 LT ~ 7+05.02 LT
NEW 18" x ~~25.95'~~ OPTION AA PIPE 26'
INV. IN = 623.80 INV. OUT 623.57

2. 7+08.07 LT ~ 7+62.59 LT
NEW 18" x ~~54.52'~~ OPTION AA PIPE 52'
INV. IN = 623.47 INV. OUT 622.00

3. 10+46.19 LT ~ 10+26.13 RT
NEW 18" x ~~30.85'~~ OPTION AA PIPE 34'
INV. IN = 625.67 INV. OUT 625.09

4. 10+36.37 LT ~ 10+46.35 LT
NEW 18" x ~~17.40'~~ OPTION AA PIPE 22'
INV. IN = 624.99 INV. OUT 624.78

5. 9+96.67 LT ~ 10+33.57 LT
NEW 18" x ~~36.50'~~ OPTION AA PIPE 36'
INV. IN = 624.68 INV. OUT 624.32

STONE DITCH NOTES

~~6+73.31~~ RT - ~~6+77.31~~ RT 6+70 to 7+15
CONSTRUCT 4.0' W X ~~8.0'~~ L X 1.0' D 53'
STONE PAD WITH STONE FILL TYPE I

7+62.59 LT - 7+78.56 LT
CONSTRUCT 4.0' W X ~~15.6'~~ L X 3.0' D 14.5'
STONE PAD WITH STONE FILL TYPE III

9+83.71 LT - 9+96.87 LT
CONSTRUCT 4.0' W X ~~11.9'~~ L X 3.0' D 17.5
STONE PAD WITH STONE FILL TYPE III

EXISTING BRIDGE INFORMATION

BUILT 1938
NON-CONTINUOUS, STEEL BEAM, CONCRETE DECK
3 SPANS @ 84', 84' AND 84'
SIDEWALK ON WEST SIDE
35'-6" ROADWAY (CURB TO CURB)
CONCRETE POSTS AND STEEL RAILING

THIS SHEET REPLACES ORIGINAL CONTRACT SHEET 14

NOTES

1. THE CONTRACTOR SHALL BE RESPONSIBLE FOR SUPPORTING AND PROTECTING THE SEWER SERVICE WHILE INSTALLING THE NEW STORM DRAIN. ANY DAMAGE WHICH OCCURS AS A RESULT OF THIS INSTALLATION SHALL BE THE CONTRACTOR'S RESPONSIBILITY TO REPAIR.
2. THE CONTRACTOR SHALL BE RESPONSIBLE FOR LOCATING AND AVOIDING THE UTILITY VAULT WHILE INSTALLING THE NEW GUARDRAIL. ANY DAMAGE WHICH OCCURS AS A RESULT OF THIS INSTALLATION SHALL BE THE CONTRACTOR'S RESPONSIBILITY TO REPAIR.
3. SEE THE UTILITY PLAN SHEETS FOR UTILITY RELOCATION INFORMATION.
4. SEE SIGNING AND STRIPING PLAN SHEET FOR SIGN AND PAVEMENT MARKING INFORMATION.

DATUM
VERTICAL NAVD 88
HORIZONTAL NAD 83 (92)
ADJUSTMENT COMPASS

SCALE 1" = 20'-0"
20 0 20

PROJECT NAME: BENNINGTON
PROJECT NUMBER: BRF 1000(16)

FILE NAME: z88J087bdr_nu.dgn
PROJECT LEADER: R. HEBERT
DESIGNED BY: J. DAVIS
LAYOUT PLAN SHEET
PLOT DATE: 8/27/2014
DRAWN BY: J. DAVIS
CHECKED BY: D. BRYANT
SHEET 14A OF 75

ANCHOR FOR STEEL BEAM RAIL

6+25.50, RT
6+95.93, LT
10+45.29, LT

GUARDRAIL APPROACH SECTION, GALVANIZED 4 RAIL BOX BEAM

6+85.91, RT - 7+18.91, RT
7+06.10, LT - 7+39.10, LT
9+86.21, RT - 10+05.41, 17.26' RT
10+07.44, LT - 10+40.58, LT

CAST-IN-PLACE CONCRETE CURB, TYPE B

6+77.27, RT - 6+98.75, RT
6+79.32, LT - 7+15.78, LT

CONSTRUCT DRIVE

10+69.07, RT 42' PAVED

VERTICAL GRANITE CURB

10+07.85, RT - 10+48.37, RT
10+25.22, LT - 10+95.00, LT

REMOVAL OF EXISTING CURB

9+86.42, RT - 9+89.62, RT
10+16.86, RT - 10+20.27, RT

STEEL BEAM GUARDRAIL, GALVANIZED

6+09.42, RT - 6+85.91, RT
6+83.43, LT - 7+06.10, LT
10+40.58, LT - 10+49.15, LT

THIS SHEET REPLACED BY NEW CONTRACT SHEET 14 SEE PREVIOUS SHEET

REMOVAL AND DISPOSAL OF GUARDRAIL

6+19.51, RT - 7+24.91, RT
6+84.24, LT - 7+45.93, LT
9+71.27, RT - 9+77.86, RT
9+99.26, LT - 10+52.04, LT

PORTLAND CEMENT CONCRETE SIDEWALK, 5 INCH

6+79.32, LT - 7+34.63, LT
10+06.15, LT - 10+55.00, LT

DETECTABLE WARNING SURFACE

6+79.32, LT

TOPSOIL AND SEED

6+34.10, RT - 7+13.31, RT
6+80.00, LT - 7+43.25, LT
9+83.04, RT - 10+48.25, RT
10+13.17, LT - 10+95.00, LT

BRIDGE RAILING, GALVANIZED 4 RAIL BOX BEAM

7+18.91, RT - 9+87.16, RT
7+39.10, LT - 10+07.44, LT

CURVE #2
DELTA = 3°23'43"
D = 2°29'28"
R = 2300.00'
T = 68.17'
L = 136.30'
E = 1.01'
BANK = VARIES FT/FT
(TRANSITION TO EXISTING)

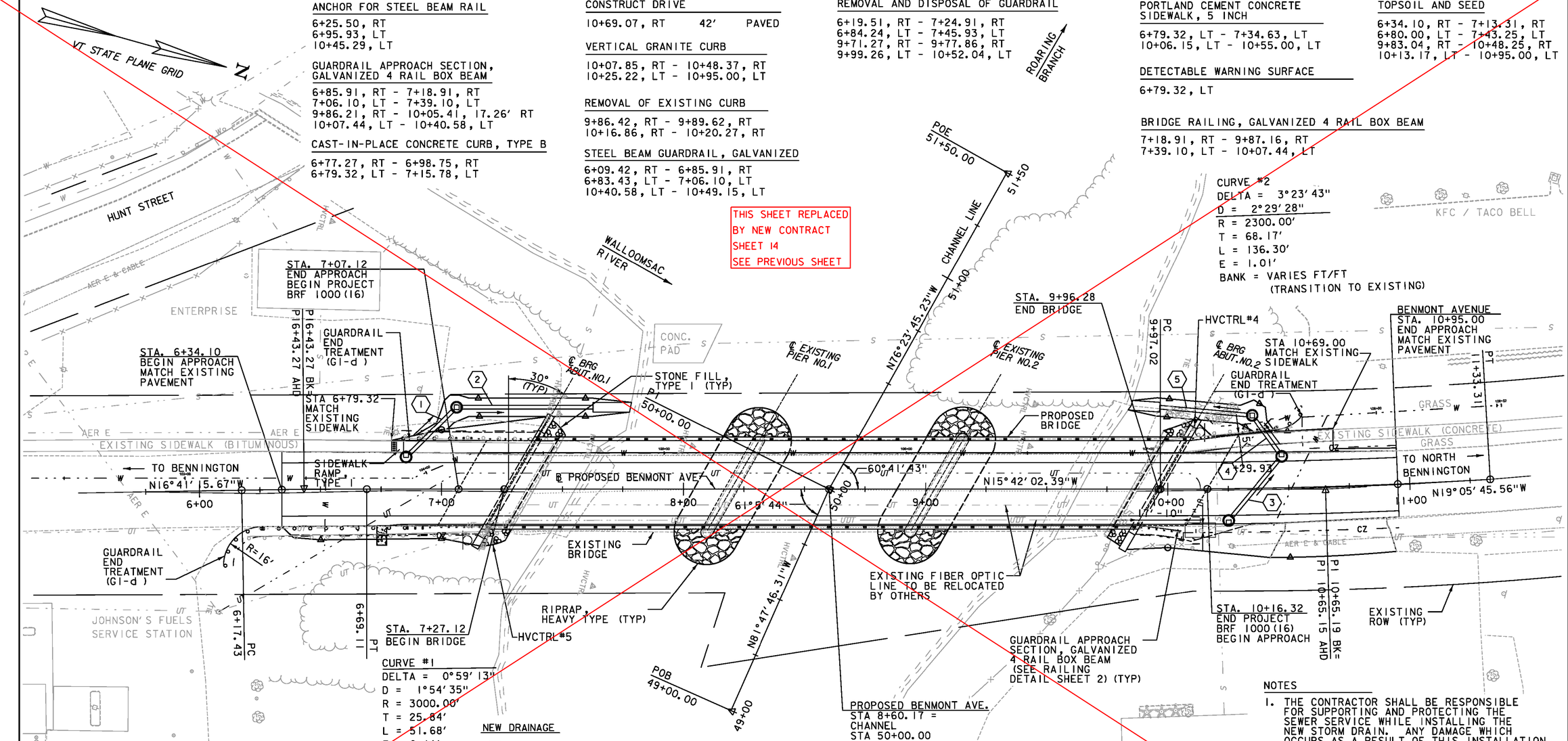

CURVE #1
DELTA = 0°59'13"
D = 1°54'35"
R = 3000.00'
T = 25.84'
L = 51.68'
E = 0.11'

EXISTING BRIDGE INFORMATION

BUILT 1938
NON-CONTINUOUS, STEEL BEAM, CONCRETE DECK
3 SPANS @ 84', 84' AND 84'
SIDEWALK ON WEST SIDE
35-6" ROADWAY (CURB TO CURB)
CONCRETE POSTS AND STEEL RAILING

NEW DRAINAGE

1. 6+86.56 LT ~ 7+05.02 LT
NEW 18"x 25.95' OPTION AA PIPE
INV. IN = 623.80 INV. OUT 623.57
2. 7+08.07 LT ~ 7+62.59 LT
NEW 18"x 54.52' OPTION AA PIPE
INV. IN = 623.47 INV. OUT 622.00
3. 10+46.19 LT ~ 10+26.13 RT
NEW 18"x 30.85' OPTION AA PIPE
INV. IN = 625.67 INV. OUT 625.09
4. 10+36.37 LT ~ 10+46.35 LT
NEW 18"x 17.40' OPTION AA PIPE
INV. IN = 624.99 INV. OUT 624.78
5. 9+96.67 LT ~ 10+33.57 LT
NEW 18"x 36.50' OPTION AA PIPE
INV. IN = 624.68 INV. OUT 624.32

STONE DITCH NOTES

6+73.31 RT - 6+77.31 RT
CONSTRUCT 4.0' W X 8.0' L X 1.0' D
STONE PAD WITH STONE FILL TYPE I

7+62.59 LT - 7+78.56 LT
CONSTRUCT 4.0' W X 15.6' L X 3.0' D
STONE PAD WITH STONE FILL TYPE III

9+83.71 LT - 9+96.87 LT
CONSTRUCT 4.0' W X 11.9' L X 3.0' D
STONE PAD WITH STONE FILL TYPE III

NOTES

1. THE CONTRACTOR SHALL BE RESPONSIBLE FOR SUPPORTING AND PROTECTING THE SEWER SERVICE WHILE INSTALLING THE NEW STORM DRAIN. ANY DAMAGE WHICH OCCURS AS A RESULT OF THIS INSTALLATION SHALL BE THE CONTRACTOR'S RESPONSIBILITY TO REPAIR.
2. THE CONTRACTOR SHALL BE RESPONSIBLE FOR LOCATING AND AVOIDING THE UTILITY VAULT WHILE INSTALLING THE NEW GUARDRAIL. ANY DAMAGE WHICH OCCURS AS A RESULT OF THIS INSTALLATION SHALL BE THE CONTRACTOR'S RESPONSIBILITY TO REPAIR.
3. SEE THE UTILITY PLAN SHEETS FOR UTILITY RELOCATION INFORMATION.
4. SEE SIGNING AND STRIPING PLAN SHEET FOR SIGN AND PAVEMENT MARKING INFORMATION.

DATUM
VERTICAL NAVD 88
HORIZONTAL NAD 83 (92)
ADJUSTMENT COMPASS

SCALE 1" = 20'-0"
20 0 20

PROJECT NAME: BENNINGTON
PROJECT NUMBER: BRF 1000(16)

FILE NAME: z88j087bdr_nu.dgn
PROJECT LEADER: R. HEBERT
DESIGNED BY: J. DAVIS
LAYOUT PLAN SHEET
PLOT DATE: 8/7/2014
DRAWN BY: J. DAVIS
CHECKED BY: D. BRYANT
SHEET 14B OF 75

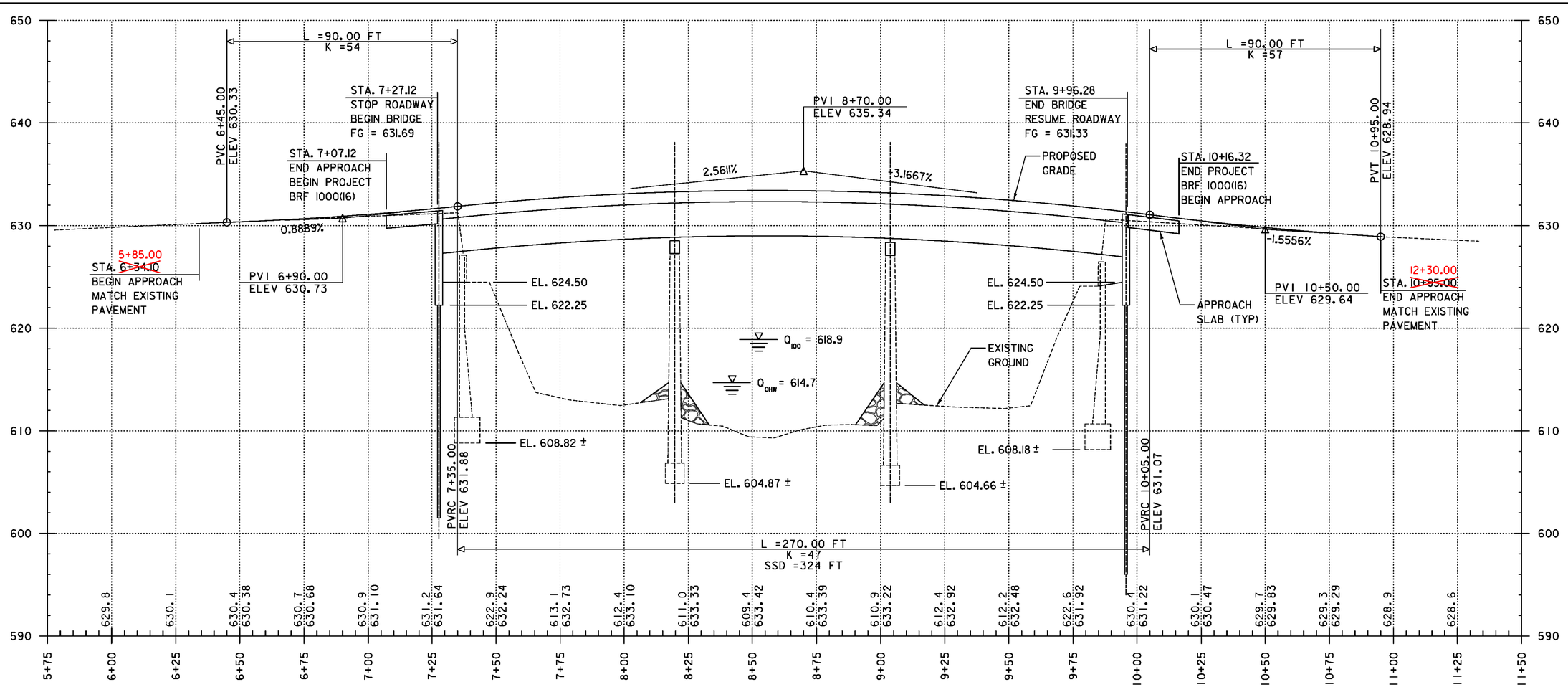

PROFILE - BENMONT AVENUE

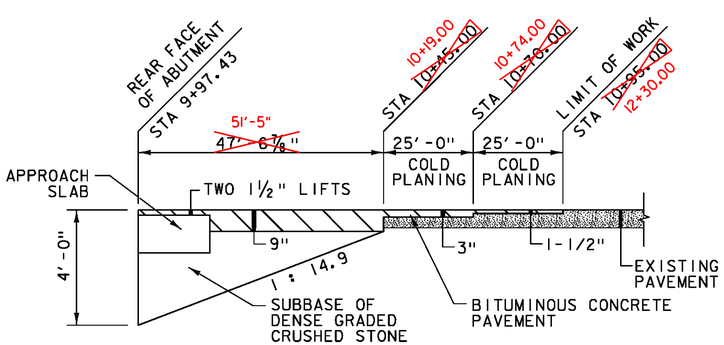

SUBBASE TAPER - NORTH APPROACH

ALONG BASELINE
NOT TO SCALE

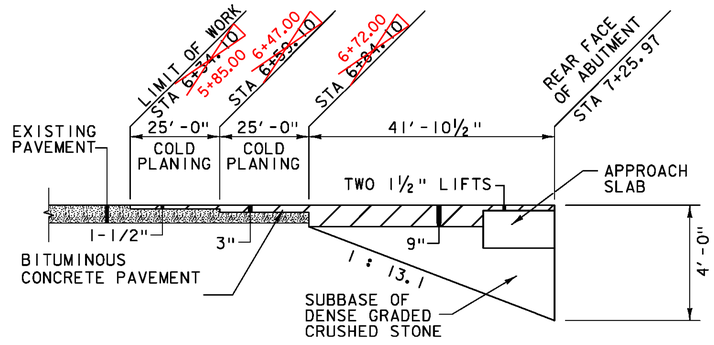

SUBBASE TAPER - SOUTH APPROACH

ALONG BASELINE
NOT TO SCALE

THE GRADES SHOWN TO THE NEAREST TENTH ARE THE EXISTING GROUND ELEVATIONS ALONG THE PROPOSED ALIGNMENT

THE GRADES SHOWN TO THE NEAREST HUNDREDTH ARE THE FINISHED GRADE ELEVATIONS FOR THE PROPOSED ALIGNMENT

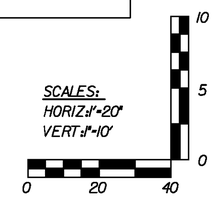

PROJECT NAME:	BENNINGTON
PROJECT NUMBER:	BRF 1000(16)

FILE NAME: z88J087bdr_pro.dgn	PLOT DATE: 8/7/2014
PROJECT LEADER: R. HEBERT	DRAWN BY: J. DAVIS
DESIGNED BY: D. BURHANS	CHECKED BY: D. BRYANT
PROFILE SHEET	SHEET 15 OF 75

P1

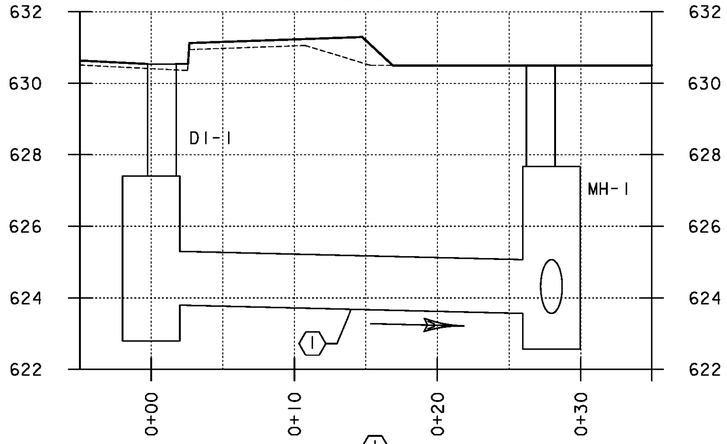

SLOPE = 0.89%
NEW PIPE
TYPE: OPTION PIPE AA
LENGTH = ~~25.95ft~~ 26.00FT
DIAMETER = 18in
INV. IN = 623.80
INV. OUT= 623.57

DI-1
GRATE: TYPE E
RIM EL = 630.54
DEPTH = 7.74ft

P3

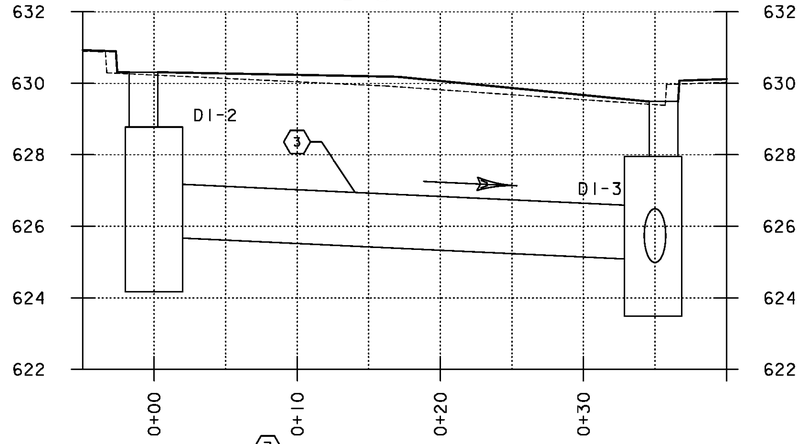

SLOPE = 1.87%
NEW PIPE
TYPE: OPTION PIPE AA
LENGTH = ~~30.95ft~~ 34.00FT
DIAMETER = 18in
INV. IN = 625.67
INV. OUT= 625.09

DI-2
GRATE: TYPE E
RIM EL = 630.31
DEPTH = 6.14ft

P4

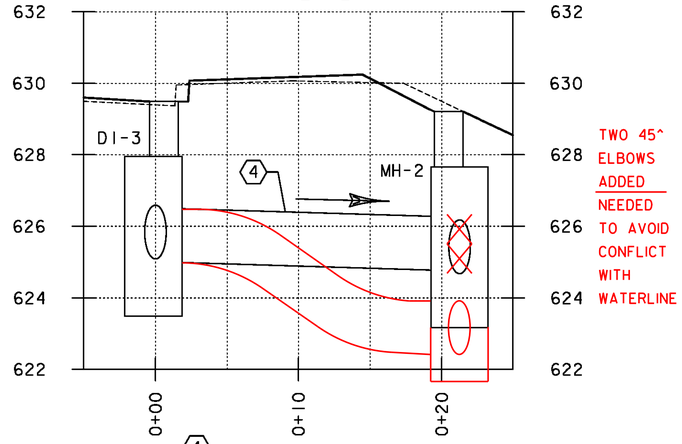

SLOPE = 1.21%
NEW PIPE
TYPE: OPTION PIPE AA
LENGTH = ~~17.40ft~~ 22.00FT
DIAMETER = 18in
INV. IN = 624.99
INV. OUT= ~~624.78~~ 622.50

DI-3
GRATE: TYPE E
RIM EL = 629.49
DEPTH = 6.00ft

TWO 45^ ELBOWS ADDED NEEDED TO AVOID CONFLICT WITH WATERLINE

P2

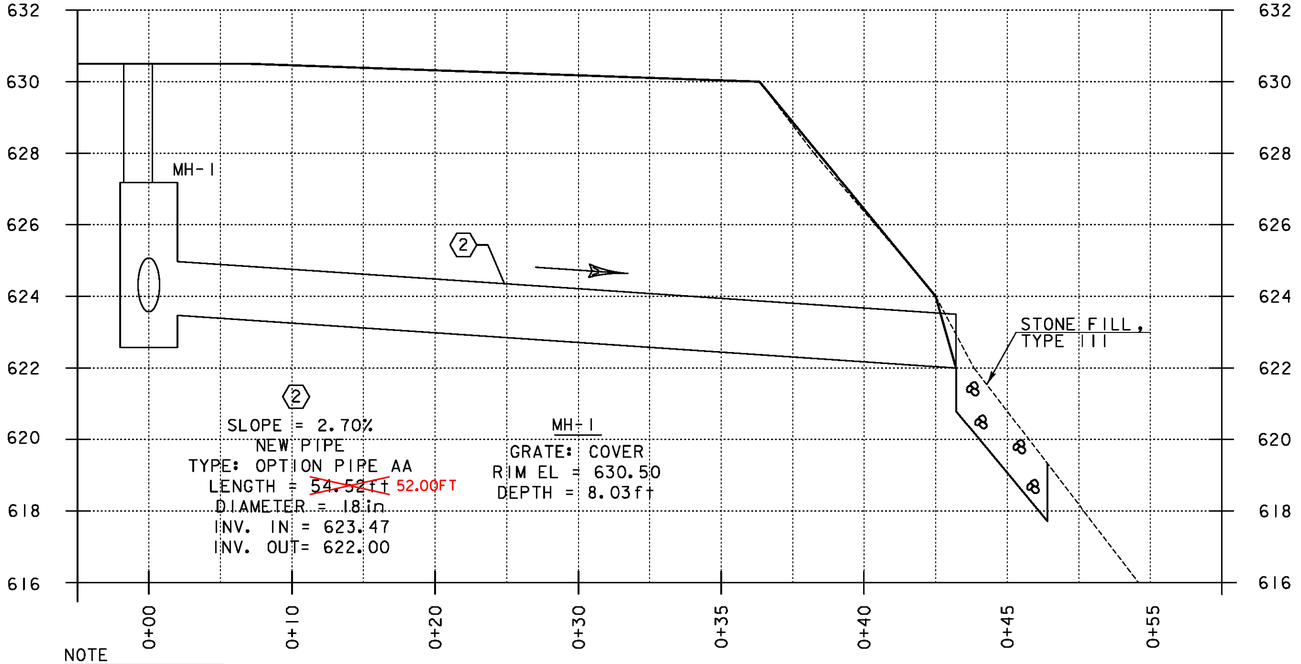

SLOPE = 2.70%
NEW PIPE
TYPE: OPTION PIPE AA
LENGTH = ~~54.52ft~~ 52.00FT
DIAMETER = 18in
INV. IN = 623.47
INV. OUT= 622.00

MH-1
GRATE: COVER
RIM EL = 630.50
DEPTH = 8.03ft

NOTE
1. AN ESTIMATED QUANTITY OF ITEM 619.17 YIELDING MARKER POSTS HAS BEEN INCLUDED TO DELINEATE PIPE OUTLETS AND DROP INLETS OUTSIDE THE PAVEMENT SURFACE OR AS DIRECTED BY THE ENGINEER.

P5

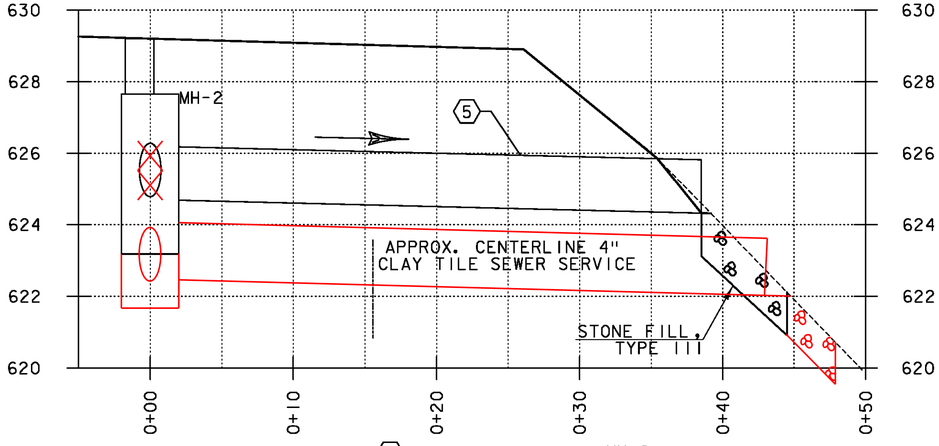

SLOPE = 0.99%
NEW PIPE
TYPE: OPTION PIPE AA
LENGTH = ~~36.50ft~~ 36.00FT
DIAMETER = 18in
INV. IN = 624.68 622.40
INV. OUT= ~~624.32~~ 622.10

MH-2
GRATE: COVER
RIM EL = ~~629.20~~ 630.00 APPROX
DEPTH = ~~6.02ft~~ 8.50FT

SCALES:
HORIZ: 1"=5'
VERT: 1"=2'

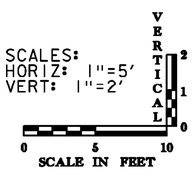

PROJECT NAME:	BENNINGTON
PROJECT NUMBER:	BRF 1000(16)
FILE NAME: z88J087bdr_pipe_pro.dgn	PLOT DATE: 8/7/2014
PROJECT LEADER: R. HEBERT	DRAWN BY: D. BRYANT
DESIGNED BY: D. BRYANT	CHECKED BY: D. BURHANS
PIPE PROFILE SHEET	SHEET 16 OF 75

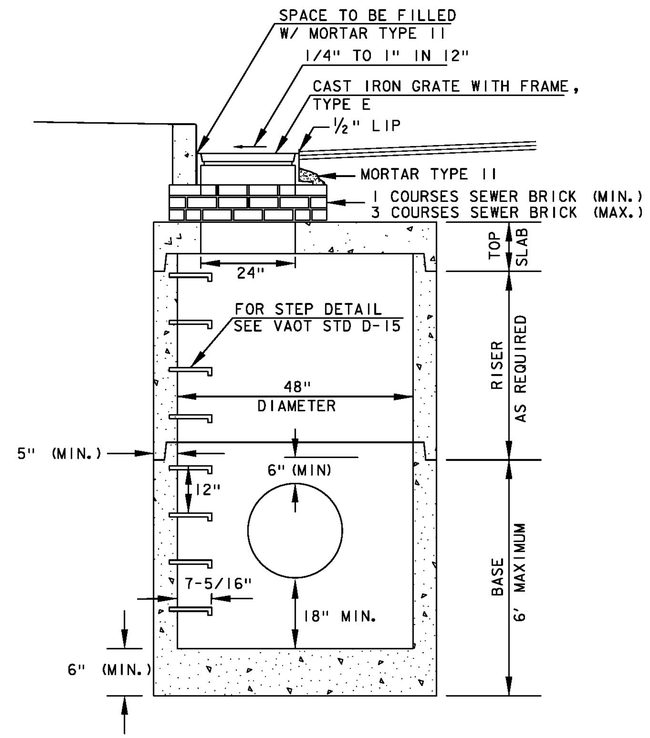

ELEVATION VIEW

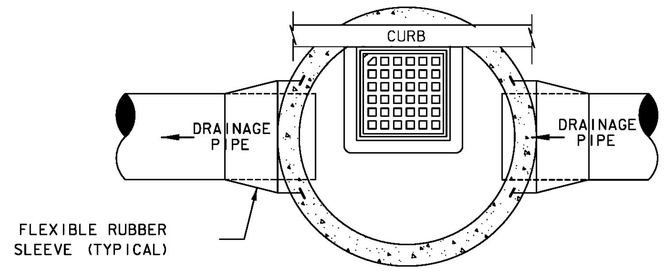

DROP INLET PLAN VIEW

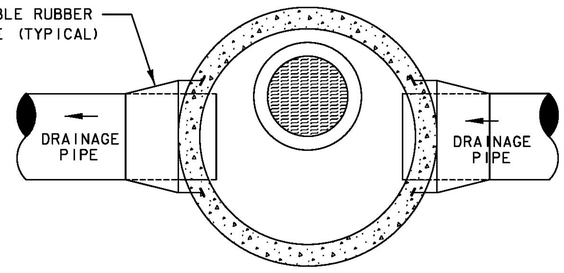

MANHOLE PLAN VIEW

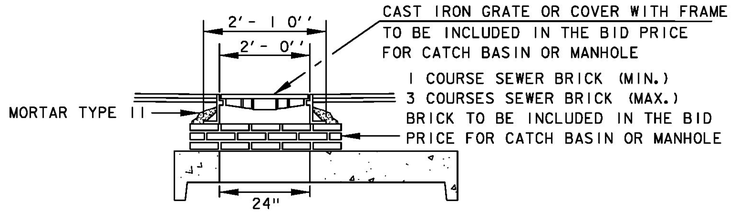

TYPICAL ELEVATION OF GRATE INSTALLATION

TYPICAL PRECAST REINFORCED CONCRETE DROP INLET (PRCDI) OR MANHOLE (PRCMH) INSTALLED IN ROADWAY

SCALE: NOT TO SCALE

PRECAST CONCRETE DROP INLET AND MANHOLE NOTES:

1) PRECAST CONCRETE SECTIONS SHALL CONFORM TO THE STANDARD SPECIFICATIONS AND ASTM C-478.
2) MINIMUM CONCRETE COMPRESSIVE STRENGTH: 4,000 PSI AT 28-DAYS
3) STEEL REINFORCING SHALL CONFORM TO ASTM A185 OR A82 FOR HL-93 LOADING.
4) MANHOLE STEPS SHALL BE 14" WIDE STEEL REINFORCED COPOLYMER POLYPROPYLENE PLASTIC CONFORMING TO ASTM C-478 AND SHALL BE CAST INTO MANHOLE SECTIONS BY THE PRECAST CONCRETE MANUFACTURER.
5) FACE OF PIPE SHALL NOT PROJECT MORE THAN 2" OR LESS THAN 1" FROM INSIDE WALL OF STRUCTURE.
6) ALL STRUCTURES WITH MULTIPLE PIPES SHALL HAVE A MINIMUM OF 12" OF OUTSIDE SURFACE BETWEEN HOLES, NO MORE THAN 75% OF A HORIZONTAL CROSS-SECTION SHALL BE HOLES, AND THERE SHALL BE NO HOLES CLOSER THAN 3" TO JOINTS.
7) FITTING FRAME TO FINAL GRADE MAY BE DONE WITH BRICK OR PRECAST CONCRETE GRADE RINGS OF APPROPRIATE THICKNESS (3 COURSES MAX).
8) UNLESS OTHERWISE PERMITTED BY THE ENGINEER, FLAT SLAB TOPS SHALL BE USED FOR ALL DROP INLETS.
9) ALL PIPE INVERTS AND PENETRATION ANGLES SHALL BE FIELD VERIFIED PRIOR TO PRECASTING.
10) PRECAST SECTIONS SHALL HAVE A TONGUE AND GROOVE JOINT AND BE ASSEMBLED USING A BUTYL RUBBER OR APPROVED EQUAL SEALANT.
11) PROVIDE FLEXIBLE RUBBER SLEEVES CONFORMING TO ASTM C-923, RESILIENT, OF SIZE REQUIRED, FOR EACH PIPE CONNECTING TO STRUCTURE. SLEEVES SHALL BE CAST INTO PRECAST STRUCTURE BY THE MANUFACTURER FOR ALL PIPE PENETRATIONS.
12) DROP INLET GRATE ORIENTATION SHALL BE IN ACCORDANCE WITH STANDARD DRAWING D-15 FOR TYPE E GRATES.
13) PAYMENT FOR INSTALLATION OF THE DROP INLETS SHALL BE MADE UNDER CONTRACT ITEM 604.18.
14) PAYMENT FOR INSTALLATION OF THE MANHOLE SHALL BE MADE UNDER CONTRACT ITEM 604.21.

PROJECT NAME:	BENNINGTON
PROJECT NUMBER:	BRF 1000(16)
FILE NAME: z881087bdr_drndet.dgn	PLOT DATE: 8/7/2014
PROJECT LEADER: R. HEBERT	DRAWN BY: J. DAVIS
DESIGNED BY: D. BRYANT	CHECKED BY: D. BURHANS
DRAINAGE DETAILS	SHEET 17 OF 75

RECORD PLANS

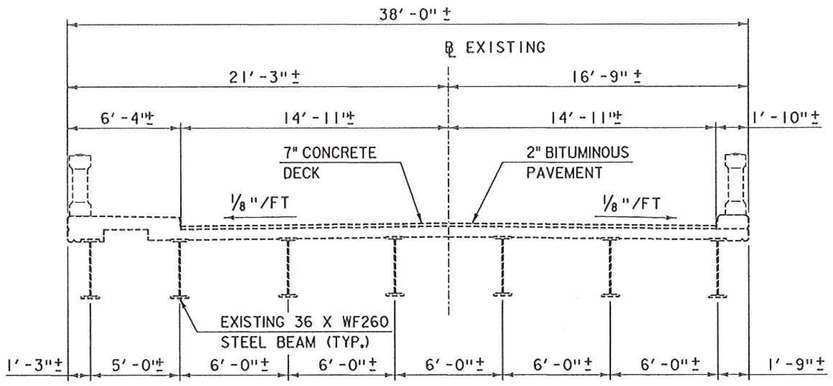

TYPICAL SECTION - EXISTING

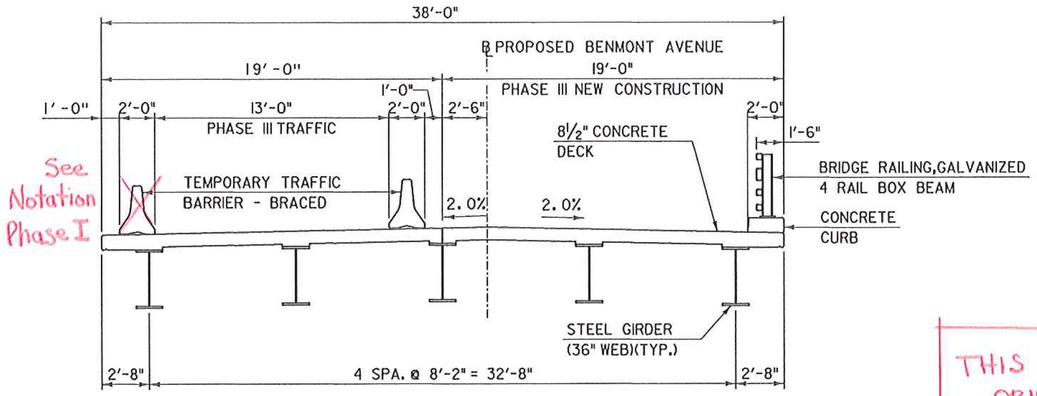

TYPICAL SECTION - CONSTRUCTION PHASE III

THIS SHEET REPLACES ORIGINAL CONTRACT SHEET 18

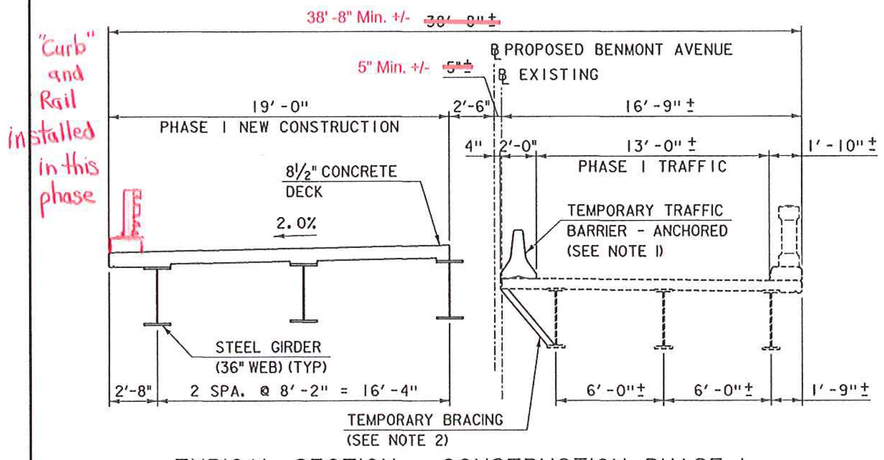

TYPICAL SECTION - CONSTRUCTION PHASE I

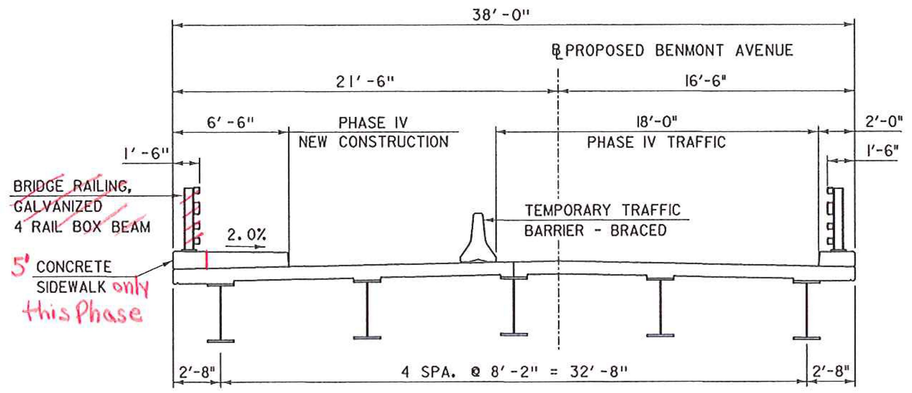

TYPICAL SECTION - CONSTRUCTION PHASE IV

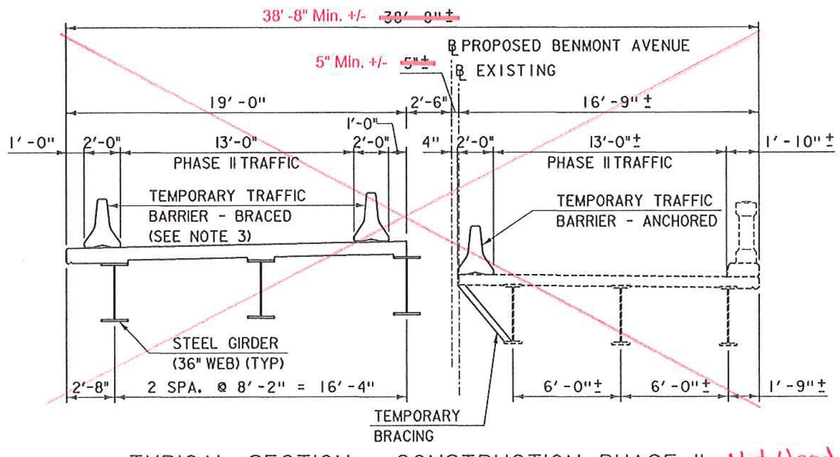

TYPICAL SECTION - CONSTRUCTION PHASE II - Not Used

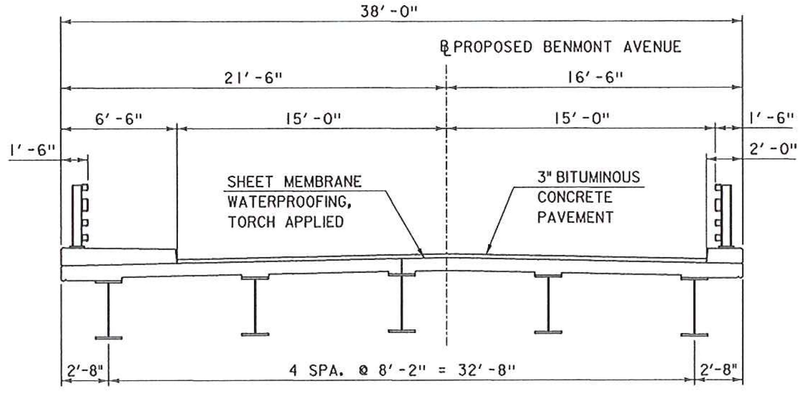

TYPICAL SECTION - FINAL BUILD

NOTES:

1. ANCHORED TEMPORARY TRAFFIC BARRIER SHALL MEET THE REQUIREMENTS FOR BRIDGE RAIL PERFORMANCE OF SECTION 621. THE DESIGN OF BARRIER CONNECTIONS, INCLUDING BUT NOT LIMITED TO SPACING OF HOLES, ANCHORAGE TYPE, AND ATTACHMENT DETAILS OF THE ANCHORED TEMPORARY TRAFFIC BARRIER SYSTEM, IS THE RESPONSIBILITY OF THE CONTRACTOR AND SHALL BE SUBMITTED TO VTRANS FOR REVIEW PER SUBSECTION 105.03(b). TEMPORARY TRAFFIC BARRIER - ANCHORED MAY BE ANCHORED TO EXISTING DECK BUT NOT TO PROPOSED DECK. PAYMENT FOR TEMPORARY TRAFFIC BARRIER - ANCHORED SHALL BE INCLUDED IN ITEM 900.645 "SPECIAL PROVISION (TRAFFIC CONTROL, ALL-INCLUSIVE)."
2. TEMPORARY BRACING TO BE DESIGNED BY CONTRACTOR. THE DESIGN AND DETAILS OF THE TEMPORARY BRACING SHALL BE SUBMITTED TO VTRANS FOR REVIEW PER SUBSECTION 105.03(B). PAYMENT FOR TEMPORARY BRACING SHALL BE INCIDENTAL TO ITEM 900.645, "SPECIAL PROVISION (TRAFFIC CONTROL, ALL-INCLUSIVE)."
3. PAYMENT FOR TEMPORARY TRAFFIC BARRIER - BRACED SHALL BE INCLUDED IN ITEM 900.645 "SPECIAL PROVISION (TRAFFIC CONTROL, ALL-INCLUSIVE)."
4. FOR TEMPORARY TRAFFIC BARRIER-BRACED DETAIL SEE SHEETS 25-26.

SCALE 1/4" = 1'-0"

PROJECT NAME:	BENNINGTON
PROJECT NUMBER:	BRF 1000(16)
FILE NAME: z881087bdr_bphase.dgn	PLOT DATE: 8/27/2014
PROJECT LEADER: R. HEBERT	DRAWN BY: S. MORGAN
DESIGNED BY: D. MYERS	CHECKED BY: R. HEBERT
BRIDGE CONSTRUCTION PHASING	SHEET 18A OF 75

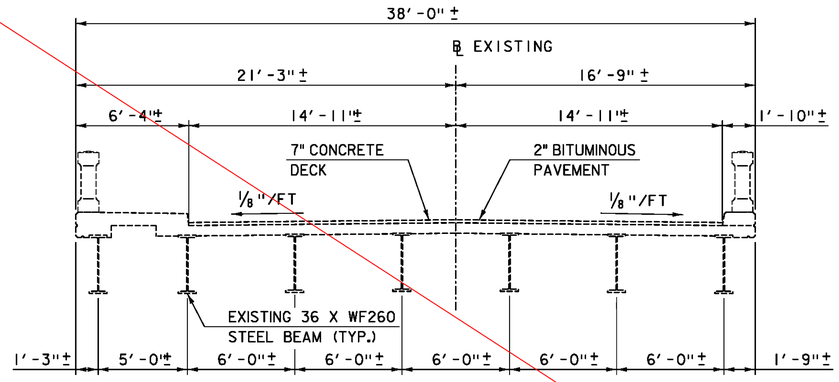

TYPICAL SECTION - EXISTING

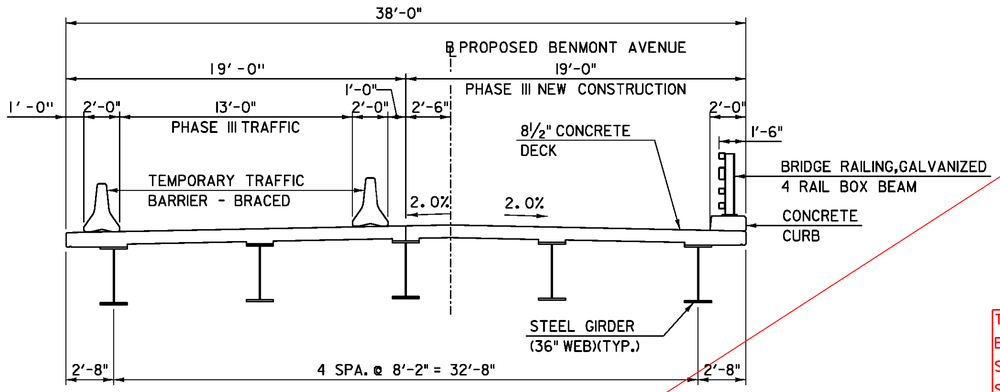

TYPICAL SECTION - CONSTRUCTION PHASE III

THIS SHEET REPLACED BY NEW CONTRACT SHEET 18 SEE PREVIOUS SHEET

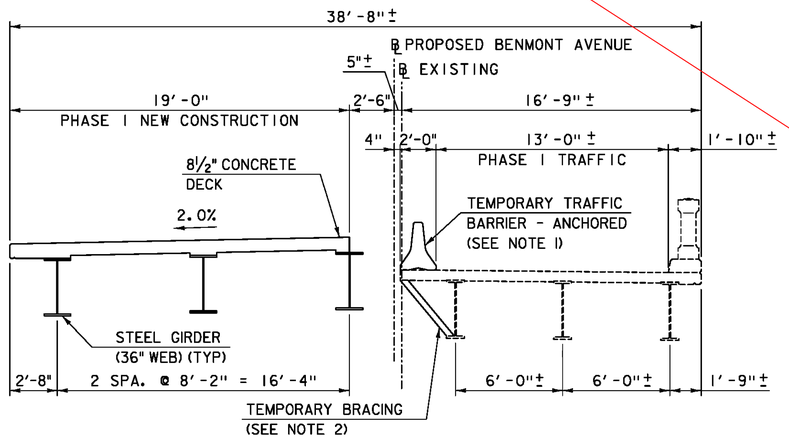

TYPICAL SECTION - CONSTRUCTION PHASE I

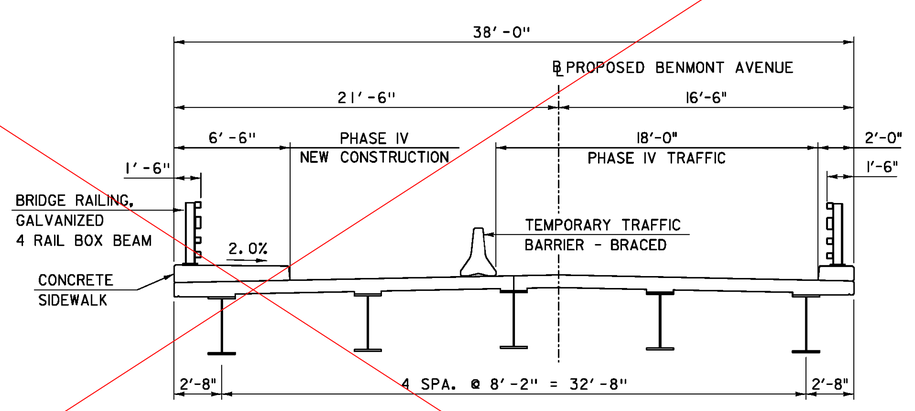

TYPICAL SECTION - CONSTRUCTION PHASE IV

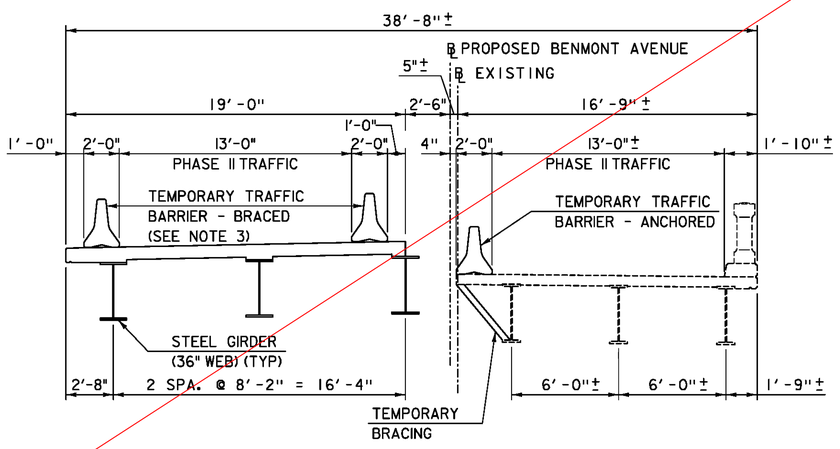

TYPICAL SECTION - CONSTRUCTION PHASE II

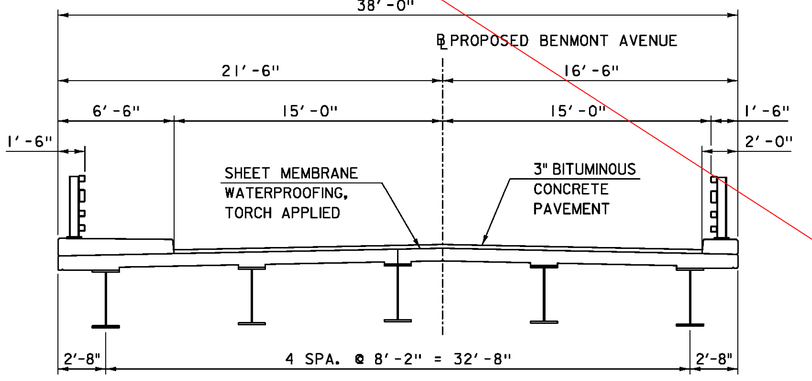

TYPICAL SECTION - FINAL BUILD

NOTES:

1. ANCHORED TEMPORARY TRAFFIC BARRIER SHALL MEET THE REQUIREMENTS FOR BRIDGE RAIL PERFORMANCE OF SECTION 621. THE DESIGN OF BARRIER CONNECTIONS, INCLUDING BUT NOT LIMITED TO SPACING OF HOLES, ANCHORAGE TYPE, AND ATTACHMENT DETAILS OF THE ANCHORED TEMPORARY TRAFFIC BARRIER SYSTEM, IS THE RESPONSIBILITY OF THE CONTRACTOR AND SHALL BE SUBMITTED TO VTRANS FOR REVIEW PER SUBSECTION 105.03(b). TEMPORARY TRAFFIC BARRIER - ANCHORED MAY BE ANCHORED TO EXISTING DECK BUT NOT TO PROPOSED DECK. PAYMENT FOR TEMPORARY TRAFFIC BARRIER - ANCHORED SHALL BE INCLUDED IN ITEM 900.645 "SPECIAL PROVISION (TRAFFIC CONTROL, ALL-INCLUSIVE)."

2. TEMPORARY BRACING TO BE DESIGNED BY CONTRACTOR. THE DESIGN AND DETAILS OF THE TEMPORARY BRACING SHALL BE SUBMITTED TO VTRANS FOR REVIEW PER SUBSECTION 105.03(B). PAYMENT FOR TEMPORARY BRACING SHALL BE INCIDENTAL TO ITEM 900.645, "SPECIAL PROVISION (TRAFFIC CONTROL, ALL-INCLUSIVE)."

3. PAYMENT FOR TEMPORARY TRAFFIC BARRIER - BRACED SHALL BE INCLUDED IN ITEM 900.645 "SPECIAL PROVISION (TRAFFIC CONTROL, ALL-INCLUSIVE)."

4. FOR TEMPORARY TRAFFIC BARRIER-BRACED DETAIL SEE SHEETS 25-26.

SCALE 1/4" = 1'-0"

PROJECT NAME: BENNINGTON
PROJECT NUMBER: BRF 1000(16)

FILE NAME: z88J087bdr_bphase.dgn
PROJECT LEADER: R. HEBERT
DESIGNED BY: D. MYERS
BRIDGE CONSTRUCTION PHASING

PLOT DATE: 8/27/2014
DRAWN BY: S. MORGAN
CHECKED BY: R. HEBERT
SHEET 18B OF 75

TRAFFIC CONTROL NOTES

1. TRAFFIC CONTROL SHALL BE PROVIDED IN ACCORDANCE WITH SECTION 641 OF THE STANDARD SPECIFICATIONS, THE MANUAL ON UNIFORM TRAFFIC CONTROL DEVICES (MUTCD), ITS REVISIONS AND AMENDMENTS, ANY PROVISIONS IN THE PLANS AND/OR SPECIFICATIONS OF THIS PROJECT, AND VERMONT AGENCY OF TRANSPORTATION STANDARD DRAWINGS. WHERE CONFLICTS EXIST BETWEEN THE STANDARDS AND THE MUTCD, THE MUTCD SHALL GOVERN.

2. IN ORDER TO MAINTAIN EFFECTIVE TRAFFIC CONTROL, THE CONTRACTOR SHALL BE RESPONSIBLE FOR MAKING SURE THAT THE SIGNS AND OTHER TRAFFIC CONTROL DEVICES INSTALLED ARE IN GOOD CONDITION. SIGN LOCATIONS AS SHOWN ARE APPROXIMATE. THE SOLE JUDGE OF THE EFFECTIVENESS OF THE CONTRACTOR'S EFFORT TOWARD THE PROTECTION OF TRAFFIC AND PERSONNEL IS THE ENGINEER.

3. THE CONTRACTOR SHALL SUBMIT TRAFFIC CONTROL PHASING PLANS SHOWING THE PROPOSED CONSTRUCTION PHASING AND NECESSARY TRAFFIC CONTROL MEASURES TO THE ENGINEER FOR REVIEW AND SHALL RECEIVE APPROVAL TWO WEEKS PRIOR TO CHANGES IN ANY TRAFFIC PATTERN. THE TRAFFIC CONTROL PLAN SHOWN IS CONSIDERED THE MINIMUM REQUIREMENT FOR SAFE OPERATIONS AND ONLY COVERS CERTAIN MINIMUM REQUIREMENTS FOR SAFE OPERATIONS AND ONLY COVERS CERTAIN PROJECT CONSTRUCTION PHASES. ADDITIONAL SIGNS AND/OR TRAFFIC CONTROL DEVICES MAY BE REQUIRED AS DETERMINED BY THE ENGINEER. SHOULD THE CONTRACTOR ELECT TO USE A DIFFERENT CONSTRUCTION PHASING SCHEME THAN THAT SHOWN ON THE TRAFFIC CONTROL PLANS, THE CONTRACTOR SHALL SUBMIT REVISIONS TO THE TRAFFIC CONTROL PLANS FOR APPROVAL. ANY CHANGE THAT ALTERS THE BASIC CONCEPT OF THE PLANS MUST BE SUBMITTED 4-6 WEEKS IN ADVANCE TO THE AGENCY FOR REVIEW AND APPROVAL.

4. ANY EXISTING PAVEMENT MARKINGS THAT CONFLICT WITH THE PROPOSED TRAFFIC CONTROL LAYOUT PHASES SHALL BE REMOVED IN ACCORDANCE WITH SECTION 646. AT THE CONCLUSION OF EACH TRAFFIC PHASE, ANY TEMPORARY PAVEMENT MARKINGS THAT CONFLICT WITH THE TRAFFIC CONTROL LAYOUT IN THE NEXT PHASE, SHALL BE REMOVED. PAYMENT FOR REMOVAL OF TEMPORARY AND EXISTING PAVMENT MARKINGS WILL BE INCLUDED IN THE UNIT PRICE BID FOR CONTRACT ITEM 900.645 SPECIAL PROVISION (TRAFFIC CONTROL, ALL-INCLUSIVE). PAINTING OUT EXISTING LINES WILL NOT BE ACCEPTABLE.

5. THE CONTRACTOR IS REQUIRED TO MAINTAIN ACCESS TO ALL SIDE ROADS AND CLOSED ROADS AT ALL TIMES. OWNERS AND/OR OCCUPANTS OF COMMERCIAL PROPERTY WITHIN THE PROJECT LIMITS SHALL BE NOTIFIED 48 HOURS IN ADVANCE OF ANY DRIVEWAY WORK THAT WILL CUT OFF ACCESS. THE CONTRACTOR IS REQUIRED TO REESTABLISH ACCESS WITHIN 2 HOURS. LONGER PERIODS WITHOUT ACCESS SHALL BE SCHEDULED AT OFF PEAK DELIVERY AND RETAIL HOURS. RESIDENTIAL OWNERS AND/OR OCCUPANTS SHALL BE NOTIFIED 24 HOURS IN ADVANCE OF WORK THAT WILL CUT OFF ACCESS. THE CONTRACTOR IS REQUIRED TO ALLOW ACCESS TO ALL PROPERTIES AT ALL TIMES FOR EMERGENCY VEHICLES.

6. INSTALL SIGNS AND PAVEMENT MARKINGS AS SHOWN ON THE PLANS PRIOR TO OPENING ANY PORTION OF THE PROJECT TO FINAL AND/OR DETOUR TRAFFIC. CARE MUST BE TAKEN TO ENSURE THAT FINAL BEACONS, SIGNS AND PAVEMENT MARKINGS DO NOT CONFLICT WITH PROPOSED TRAFFIC PATTERNS IN ANY ONE STAGE. FINAL SIGNS AND BEACONS THAT ARE IN PLACE BUT ARE NOT BEING USED SHALL BE COVERED.

7. THE COVERING OF EXISTING SIGNS SHALL BE AS ORDERED BY THE ENGINEER. PAYMENT FOR COVERING SIGNS WILL BE INCLUDED IN THE UNIT PRICE BID FOR ITEM 900.645 SPECIAL PROVISION (TRAFFIC CONTROL, ALL-INCLUSIVE).

8. CONSTRUCTION SIGNS WITH YIELDING POSTS, PORTABLE CHANGEABLE MESSAGE SIGNS, TEMPORARY STRIPING, REMOVAL OF EXISTING PAVEMENT MARKINGS, RAISED PAVEMENT MARKERS, TEMPORARY TRAFFIC BARRIER, REMOVE AND RESET TEMPORARY TRAFFIC BARRIER, ENERGY ABSORPTION ATTENUATORS AND ALL OTHER TEMPORARY TRAFFIC CONTROL DEVICES SHALL BE PAID FOR UNDER ITEM 900.645 SPECIAL PROVISION (TRAFFIC CONTROL, ALL-INCLUSIVE).

9. BEFORE TRAFFIC CAN UTILIZE CONSTRUCTED ROADWAYS, ALL DRAINAGE STRUCTURES, GUARDRAIL AND BARRIERS SHALL BE IN PLACE.

10. THE CONTRACTOR SHALL COORDINATE CONSTRUCTION OPERATIONS WITH THE ACTIVITIES OF THE UTILITY COMPANIES AND OTHER ENTITIES AFFECTED BY THE CONSTRUCTION.

11. SIGNS AT INTERSECTIONS SHALL BE PLACED SO THAT THEY DO NOT OBSTRUCT A MOTORIST'S LINE OF SIGHT. SIGNS SHALL ONLY BE VISIBLE AT THE TIMES WHEN THE MESSAGE IS PERTINENT, I.E. A "FLAGGER AHEAD" SIGN SHALL ONLY BE VISIBLE TO MOTORISTS WHEN THE FLAGGER IS ACTUALLY CONTROLLING TRAFFIC.

12. ALL DROP-OFF AREAS WITHIN CONSTRUCTION AND MAINTENANCE WORK ZONE AREAS SHALL BE PROTECTED FROM ADJACENT TRAVEL LANES IN ACCORDANCE WITH POLICIES FOLLOWED BY THE AGENCY (SEE STD. T-35 AND T-36).

13. TRAFFIC CONTROL DURING BRIDGE CONSTRUCTION WILL CONSIST OF ONE-WAY, NORTHBOUND TRAFFIC AS SHOWN ON THE TRAFFIC CONTROL PLAN SHEETS FOR PHASES I, III AND IV. SOUTHBOUND TRAFFIC WILL BE DETOURED TO US ROUTE 7 AS SHOWN ON DETOUR SIGNING PLAN. THE SIDEWALK ON THE BRIDGE WILL BE CLOSED FOR THE DURATION OF THE PROJECT. TEMPORARY PEDESTRIAN ACCOMMODATIONS SHALL BE PROVIDED ALONG HUNT STREET, ACROSS THE EXISTING PEDESTRIAN BRIDGE, AND ALONG HICKS AVENUE. WHERE EXISTING SIDEWALKS ARE NOT PRESENT ON HUNT ST AND HICKS AVE, A PORTION OF THE EXISTING PAVEMENT SHALL BE USED TO ACCOMMODATE THE PEDESTRIANS. A TEMPORARY PEDESTRIAN SAFETY RAIL (SEE SPECIAL PROVISION 900.640 TEMPORARY PEDESTRIAN SAFETY RAIL) SHALL BE PROVIDED BETWEEN THE VEHICULAR TRAVEL LANES AND THE PEDESTRIAN WAY. TRAVEL LANE AND PEDESTRIAN WAY WIDTHS SHALL MEET TOWN OF BENNINGTON CRITERIA. THE TEMPORARY PEDESTRIAN FACILITY SHOULD ALSO MEET THE LATEST VERSION OF DRAFT PROPOSED RIGHT-OF-WAY ACCESSIBILITY GUIDELINES (PROWAG) REQUIREMENTS AS AN APPROVED ALTERNATIVE TO AMERICANS WITH DISABILITIES ACT ACCESSIBILITY GUIDELINES (ADAAG). APPROPRIATE SIGNING SHALL BE PROVIDED FOR TEMPORARY CROSSWALK LOCATIONS. CONTRACTOR SHALL SUBMIT PLANS SHOWING THE PROPOSED TEMPORARY PEDESTRIAN ACCOMMODATIONS TO THE ENGINEER FOR REVIEW AND APPROVAL PRIOR TO RESTRICTING ACCESS TO THE EXISTING PEDESTRIAN ACCOMMODATIONS.

14. THE PORTABLE CHANGEABLE MESSAGE SIGNS SHALL BE IN USE TWO WEEKS PRIOR TO THE PROJECT START TO WARN THE PUBLIC OF TRAFFIC DISRUPTION OVER THE BRIDGE.

15. THE EXACT LOCATION FOR ALL DETOUR AND CONSTRUCTION SIGNING WILL BE COORDINATED BY THE ENGINEER AND THE CONTRACTOR.

16. VEHICLES / EQUIPMENT PARKED WITHIN THE PROJECT LIMITS BELONGING TO THE CONTRACTOR AND / OR THE CONTRACTOR'S EMPLOYEES SHALL BE KEPT TO A MINIMUM AND PARKED IN SUCH A MANNER THAT DOES NOT OBSTRUCT THE VIEW OF SIGNS, BARRIERS, BARRICADES OR ANY OTHER TRAFFIC CONTROL DEVICES. THE CONTRACTOR SHALL NOT PARK VEHICLES / EQUIPMENT OR STORE MATERIALS IN ANY LOCATION WHERE IT IS DEEMED A SAFETY HAZARD BY THE ENGINEER.

17. WHEN SHORT-DURATION ONE-WAY TRAFFIC IS NECESSARY AND APPROVED BY THE ENGINEER, THE CONTRACTOR SHALL REFER TO THE TYPICAL FLAGGER OPERATION DETAIL IN THE STANDARD DRAWINGS AND THE MUTCD FOR TYPICAL CHANNELIZATION AND MAINTENANCE OF TRAFFIC.

18. SIGNS AND SIGN LOCATIONS SHALL BE IN CONFORMANCE WITH THE CURRENT MUTCD, STATE OF VERMONT STANDARDS, AS SHOWN ON THE TRAFFIC CONTROL PLANS AND AS DIRECTED BY THE ENGINEER. SIGN LOCATIONS AS SHOWN ON THE PLANS ARE APPROXIMATE. EXACT LOCATIONS SHALL BE DETERMINED BY THE CONTRACTOR AND APPROVED BY THE ENGINEER IN THE FIELD.

19. TEMPORARY LANE WIDTHS SHALL BE A MINIMUM OF 13 FEET UNLESS OTHERWISE NOTED.

20. DESIGN OF TEMPORARY SHEETING AND BRACING SHALL BE THE RESPONSIBILITY OF THE CONTRACTOR AND SHALL BE IN ACCORDANCE WITH SECTION 505. PAYMENT SHALL BE UNDER ITEM 900.645 SPECIAL PROVISION (TRAFFIC CONTROL, ALL-INCLUSIVE).

21. THE ENERGY ABSORPTION ATTENUATORS FOR THIS PROJECT SHALL BE SUITABLE FOR A NARROW WIDTH APPLICATION AND SHALL BE INSTALLED AS SHOWN ON THE TRAFFIC CONTROL PLAN SHEETS. THESE ATTENUATORS WILL BE PAID FOR UNDER THE ITEM 900.645 SPECIAL PROVISION (TRAFFIC CONTROL, ALL-INCLUSIVE). THE ATTENUATORS SHALL BE FURNISHED IN ACCORDANCE WITH SECTION 621 AND MEET THE REQUIREMENTS OF THE LATEST VERSION OF THE AASHTO "ROADSIDE DESIGN GUIDE," AND SHALL BE DESIGNED FOR A 4500 LB VEHICLE TRAVELING AT 30 MPH.

22. TRAFFIC CONTROL PLAN – PHASE II WAS DEVELOPED TO MAINTAIN TRAFFIC DURING POSSIBLE WINTER SHUTDOWN. PHASE II MAY BE ELIMINATED IF WORK MAY PROGRESS WITHOUT INTERUPTION.

23. PAYMENT FOR TEMPORARY BRACING AND TEMPORARY TRAFFIC BARRIER – BRACED SHALL BE INCLUDED IN ITEM 900.645 “SPECIAL PROVISION (TRAFFIC CONTROL, ALL-INCLUSIVE).”

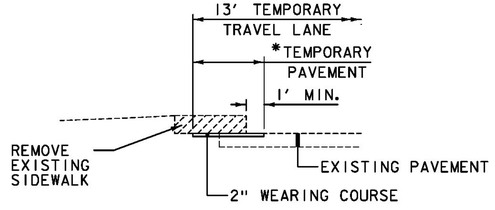

TEMPORARY PAVEMENT DETAIL

NOT TO SCALE

*TEMPORARY PAVEMENT SHALL BE PAID FOR UNDER ITEM 900.680 SPECIAL PROVISION (BITUMINOUS CONCRETE PAVEMENT, SMALL QUANTITY). FOR REMOVAL OF TEMPORARY PAVEMENT IN PHASE III SHALL BE INCIDENTAL TO ITEM 203.15 COMMON EXCAVATION.

PROJECT NAME:	BENNINGTON
PROJECT NUMBER:	BRF 1000(16)
FILE NAME: z881087bdr_tcpnotes.dgn	PLOT DATE: 8/7/2014
PROJECT LEADER: R. HEBERT	DRAWN BY: A. GREENLAW
DESIGNED BY: A. GREENLAW	CHECKED BY: D. BRYANT
TRAFFIC CONTROL NOTES	SHEET 19 OF 75

ENERGY ABSORPTION ATTENUATOR, SAND FILLED PLASTIC BARREL

6+80.0, LT
10+29.0, LT

HUNT STREET

VT STATE PLANE GRID

N

ENTERPRISE

55'-0" TAPER (20' DRUM SPACING)

65'-0" BUFFER (16.25' DRUM SPACING)

SIDEWALK CLOSED (MOUNT ON TYPE III BARRICADE)

WORK ZONE DELINEATION (10' DRUM SPACING)

STA. 6+92

REMOVE EXISTING SIDEWALK, ADD TEMPORARY PAVEMENT (SEE TRAFFIC CONTROL NOTES SHEET FOR TEMPORARY PAVEMENT DETAILS)

TEMPORARY SHEET PILE

RAISED PAVEMENT MARKERS, TYPE II

6+18.0, RT - 10+28.6, RT
6+90.1, CL - 10+28.6, CL

TEMPORARY TRAFFIC BARRIER

5+91.80, LT - 6+89.98, RT
6+89.98, RT - 10+28.66, RT
10+25.20, LT - 10+55.40, LT

ROARING BRANCH

CONC. PAD

PHASE I WORK

MATCH LINE

EXISTING DYCL

TO BENNINGTON

BENMONT AVE

6+00

℄ PROPOSED BENMONT AVE.

7+00

TSYEL

8+00

9+00

TSWEL

ENERGY ABSORPTION ATTENUATOR

TYPE III BARRICADE (MOD.) (TYP.)

BEGIN TEMP. EDGELINES AND RPM'S

OM3-L (MOUNTED ON TEMP. TRAFFIC BARRIER) (SEE NOTE 2)

TEMPORARY TRAFFIC BARRIER

SPECIAL PROVISION (TEMPORARY PEDESTRIAN SAFETY RAIL)

HUNT STREET
HICKS AVENUE

JOHNSON'S FUELS SERVICE STATION

TEMPORARY 4" WHITE LINE

6+18.0, RT - 10+28.6, RT

TEMPORARY 4" YELLOW LINE

6+90.1, CL - 10+28.6, CL

TEMPORARY 24" STOP BAR

11+00 LT

TEMPORARY LETTER OR SYMBOL

11+09 LT
11+20 LT

KFC / TACO BELL

VT STATE PLANE GRID

N

25' BARREL TAPER

STOP

SIDEWALK CLOSED (MOUNT ON TYPE III BARRICADE)

BRIDGE CLOSED (MOUNT ON TYPE III BARRICADE)

ROARING BRANCH

PHASE I WORK

STA. 10+33

MATCH LINE

TEMP. LETTERS AND SYMBOLS

GRASS

EXISTING SIDEWALK (CONCRETE)

GRASS

BENMONT AVE

TO NORTH BENNINGTON

NORTHSIDE D

TSWEL

10+00

TSYEL

TEMP. 24" STOP BAR

11+00

END ROAD WORK

EXISTING DYCL

℄ PROPOSED BENMONT AVE.

DO NOT ENTER

STA. 10+92

95'-0"

40'-0"

ENERGY ABSORPTION ATTENUATOR

END TEMP. EDGE LINES AND RPM'S

TEMPORARY SHEET PILE

TEMPORARY TRAFFIC BARRIER

NOTES:

1. SEE TRAFFIC CONTROL NOTES SHEET FOR ITEM PAYMENT DETAILS.
2. 12" X 36" OBJECT MARKER TO BE INSTALLED AT END OF BARRIR TAPER. STRIPES SLOPE DOWNWARD TOWARD THE SIDE OF THE BARRIER ON WHICH TRAFFIC IS TO PASS. BOTTOM OF SIGN SHALL BE 6" ABOVE TOP OF BARRIER. ATTACHMENT OF OBJECT MARKER POST TO BARRIER SHALL BE APPROVED BY THE ENGINEER.

LEGEND

	WORK ZONE
⊕	BARREL
	SIGN LOCATION. TEMPORARY MOUNTING
	TYPE III BARRICADE
	TYPE III BARRICADE (MOD.)
	ENERGY ABSORPTION ATTENUATOR
	TEMPORARY TRAFFIC BARRIER
≠≠≠	PAVEMENT MARKING REMOVAL
+	RAISED PAVEMENT MARKINGS (RPM)
	DIRECTION OF TRAVEL
	TEMPORARY PAVEMENT MARKINGS
	TEMPORARY PAVEMENT
DYCL	DOUBLE YELLOW CENTER LINE
TSYEL	TEMPORARY SOLID YELLOW EDGE LINE
TSWEL	TEMPORARY SOLID WHITE EDGE LINE

SCALE: 1"=20'-0"

20 0 20

PROJECT NAME: BENNINGTON
PROJECT NUMBER: BRF 1000(16)

FILE NAME: z88j087bdr_tcp01.dgn
PROJECT LEADER: R. HEBERT
DESIGNED BY: D. BURHANS
TRAFFIC CONTROL PLAN - PHASE I

PLOT DATE: 8/8/2014
DRAWN BY: T. KELLEY
CHECKED BY: D. BRYANT
SHEET 20 OF 75

ENERGY ABSORPTION ATTENUATOR, SAND FILLED PLASTIC BARREL

6+80.0, LT
6+97.4, CL
10+27.8, LT

TEMPORARY TRAFFIC BARRIER

6+97.24, CL - 10+27.23, LT
6+97.24, LT - 10+27.23, LT
6+79.86, LT - 10+40.11, LT

VT STATE PLANE GRID

N

HUNT STREET

ENTERPRISE

ROARING BRANCH

CONC. PAD

SIDEWALK CLOSED (MOUNT ON TYPE III BARRICADE)

ENERGY ABSORBTION ATTENUATOR

℄ PROPOSED BENMONT AVE.

EXISTING SIDEWALK (BITUMINOUS)

TEMPORARY TRAFFIC BARRIER

TSWEL

TSYEL

TSYEL

TSWEL

TSYEL

TSWEL

TO BENNINGTON

EXISTING DYCL

BENMONT AVE

6+00

7+00

8+00

9+00

MATCH LINE

BEGIN TEMP. EDGELINES AND RPM'S

ENERGY ABSORPTION ATTENUATOR

TEMPORARY 4" YELLOW LINE

5+77.80, CL/LT - 11+26.18, CL/LT
5+77.80, CL/RT - 6+90.10, CL/RT
10+28.60, CL/RT - 11+26.20, CL/RT

TEMPORARY 4" WHITE LINE

5+80.89, LT - 10+09.83, LT

RAISED PAVEMENT MARKERS, TYPE II

5+77.80, CL/RT - 6+90.10, CL/RT
5+77.80, CL/LT - 10+36.80, CL/LT
5+80.90, LT - 10+10.00, LT

JOHNSON'S FUELS SERVICE STATION

KFC / TACO BELL

VT STATE PLANE GRID

N

ROARING BRANCH

SIDEWALK CLOSED (MOUNT ON TYPE III BARRICADE)

TEMPORARY TRAFFIC BARRIER

END RPM'S

GRASS

EXISTING SIDEWALK (CONCRETE)

GRASS

TSWEL

TSYEL

TSYEL

TSWEL

10+00

11+00

BENMONT AVE

EXISTING DYCL

MATCH LINE

ENERGY ABSORPTION ATTENUATOR

END TEMP. EDGE LINES

END RPM

REPOSITION BARRIER TOWARDS ATTENUATOR

℄ PROPOSED BENMONT AVE.

TO NORTH BENNINGTON

NOTES:

1. SIGNS SHOWN IN A DASHED LINE STYLE ARE PLACED IN PHASE I AND WILL REMAIN IN PLACE FOR THE DURATION OF PHASE II
2. SEE TRAFFIC CONTROL PLAN - PHASE I FOR LEGEND & ABBREVIATIONS.
3. SEE TRAFFIC CONTROL NOTES SHEET FOR ITEM PAYMENT DETAILS.

SCALE: 1"=20'-0"
20 0 20

PROJECT NAME: BENNINGTON
PROJECT NUMBER: BRF 1000(16)

FILE NAME: z881087bdr_tcp02.dgn
PROJECT LEADER: R. HEBERT
DESIGNED BY: D. BURHANS
TRAFFIC CONTROL PLAN - PHASE II

PLOT DATE: 8/7/2014
DRAWN BY: T. KELLEY
CHECKED BY: D. BRYANT
SHEET 21 OF 75

ENERGY ABSORPTION ATTENUATOR, SAND FILLED PLASTIC BARREL

5+79.5, RT
10+25.8, RT

VT STATE PLANE GRID

TEMPORARY TRAFFIC BARRIER
5+92.00, RT - 7+00.14, LT
10+18.75, LT - 10+44.00, RT

ROARING BRANCH

HUNT STREET

65'-0" TAPER (20' DRUM SPACING)

65'-0" BUFFER (16.25' DRUM SPACING)

SIDEWALK CLOSED (MOUNT ON TYPE III BARRICADE)

RETAIN PHASE I DRUMS

ENERGY ABSORPTION ATTENUATOR

STA. 6+92

CONC. PAD

TEMPORARY TRAFFIC BARRIER

TEMPORARY SHEET PILE

℄ PROPOSED BENMONT AVE.

EXISTING SIDEWALK (BITUMINOUS)

TO BENNINGTON

EXISTING DYCL

BEGIN TEMP. EDGELINES AND RPM'S

+ TSWEL +

TSYEL

BENMONT AVE

6+00

7+00

8+00

9+00

MATCH LINE

RETAIN PHASE I DRUMS

ENERGY ABSORPTION ATTENUATOR

100'

OM3-L (MOUNTED ON TEMP. TRAFFIC BARRIER) (SEE NOTE 5)

TEMPORARY 24" STOP BAR
11+00 LT

PHASE III WORK

TEMPORARY LETTER OR SYMBOL
11+09 LT
11+20 LT

RAISED PAVEMENT MARKERS, TYPE II
5+23.1, RT - 7+07.2, CL/LT
5+42.1, CL - 6+80.0, LT

25 M.P.H.

JOHNSON'S FUELS SERVICE STATION

TYPE III BARRICADE (MOD.) (TYP.)

TEMPORARY 4" YELLOW LINE
5+01.0, RT - 7+07.2, CL/LT
10+30.5, CL/LT - 11+39.1, RT

TEMPORARY 4" WHITE LINE
5+42.1, CL/LT - 6+79.8, LT
10+10.0, LT - 11+26.2, CL/LT

KFC / TACO BELL

VT STATE PLANE GRID

TEMPORARY TRAFFIC BARRIER

ROARING BRANCH

END RPM'S

DO NOT ENTER

15' BARREL TAPER

STA. 10+32

BRIDGE CLOSED (MOUNT ON TYPE III BARRICADE)

SIDEWALK CLOSED (MOUNT ON TYPE III BARRICADE)

STOP

TEMP. LETTERS AND SYMBOLS (SEE NOTE 3)

GRASS

EXISTING SIDEWALK (CONCRETE)

GRASS

TSWEL

TSYEL 11+00

BENMONT AVE

TEMPORARY SHEET PILE

10+00

EXISTING DYCL

END ROAD WORK

MATCH LINE

TEMP. 24" STOP BAR (SEE NOTE 3)

END TEMP. EDGE LINES

PHASE III WORK

ENERGY ABSORPTION ATTENUATOR

℄ PROPOSED BENMONT AVE.

TO NORTH BENNINGTON

NORTHSIDE DRIVE

NOTES:

1. SIGNS SHOWN IN A DASHED LINE STYLE ARE PLACED IN PHASE I AND WILL REMAIN IN PLACE FOR THE DURATION OF PHASE III.
2. SEE TRAFFIC CONTROL PLAN - PHASE I FOR LEGEND & ABBREVIATIONS.
3. TEMPORARY LETTERS & SYMBOLS PLACED IN PHASE III AND WILL REMAIN IN PLACE FOR PHASE IV.
4. SEE TRAFFIC CONTROL NOTES SHEET FOR ITEM PAYMENT DETAILS.
5. OBJECT MARKER TO BE INSTALLED AT END OF BARRIER TAPER. BOTTOM OF OBJECT MARKER SHALL BE 6" ABOVE TOP OF TEMPORARY TRAFFIC BARRIER. ATTACHMENT OF OBJECT MARKER POST TO BARRIER SHALL BE APPROVED BY THE ENGINEER.

SCALE: 1"=20'-0"
20 0 20

PROJECT NAME: BENNINGTON
PROJECT NUMBER: BRF 1000(16)

FILE NAME: z88J087bdr_tcp03.dgn
PROJECT LEADER: R. HEBERT
DESIGNED BY: D. BURHANS
TRAFFIC CONTROL PLAN - PHASE III

PLOT DATE: 8/27/2014
DRAWN BY: T. KELLEY
CHECKED BY: D. BRYANT
SHEET 22 OF 75

ENERGY ABSORPTION ATTENUATOR, SAND FILLED PLASTIC BARREL
5+83.8, LT
10+34.7, LT

RAISED PAVEMENT MARKERS, TYPE II
6+22.0, RT - 10+28.7, RT
6+77.2, CL - 10+28.7, CL

TEMPORARY TRAFFIC BARRIER
5+88.40, LT - 7+00.14, LT
10+18.75, LT - 10+57.50, LT

VT STATE PLANE GRID

ROARING BRANCH

HUNT STREET

ENTERPRISE

55'-0" TAPER (20' DRUM SPACING)

65'-0" BUFFER (16.25' DRUM SPACING)

SIDEWALK CLOSED (MOUNT ON TYPE III BARRICADE)

WORK ZONE DELINEATION (10' DRUM SPACING)

STA. 6+92

CONC. PAD

PHASE IV WORK

℄ PROPOSED BENMONT AVE.

EXISTING SIDEWALK (CONCRETE)

EXISTING DYCL

TO BENNINGTON

BENMONT AVE

6+00

7+00

8+00

9+00

TSYEL

TSWEL

MATCH LINE

12 DUCTS ENCASED IN CONCRETE

6 DUCTS

6 DUCTS

TYPE III BARRICADE (MOD.) (TYP.)

TEMPORARY TRAFFIC BARRIER

BEGIN TEMP. EDGELINES AND RPM'S

OM3-L (SEE NOTE 6)

TEMPORARY 24" STOP BAR
11+00 LT

TEMPORARY 4" WHITE LINE
6+22.0, RT - 10+28.7 RT

TEMPORARY 4" YELLOW LINE
6+78.0, CL - 10+28.7, CL

JOHNSON'S FUELS SERVICE STATION

KFC / TACO BELL

VT STATE PLANE GRID

14' BARREL TAPER

STA. 10+38

PHASE IV WORK

ROARING BRANCH

SIDEWALK CLOSED (MOUNT ON TYPE III BARRICADE)

BRIDGE CLOSED (MOUNT ON TYPE III BARRICADE)

STOP

TEMPORARY TRAFFIC BARRIER

TEMP. LETTERS AND SYMBOLS (SEE NOTE 4)

GRASS

EXISTING SIDEWALK (CONCRETE)

GRASS

BENMONT AVE

TO NORTH BENNINGTON

NORTHSIDE DRIVE

MATCH LINE

TSWEL

10+00 TSYEL

TEMP. 24" STOP BAR (SEE NOTE 4)

11+00

END ROAD WORK

EXISTING DYCL

END TEMP. EDGE LINES. AND RPM'S

℄ PROPOSED BENMONT AVE.

95'-0"

40'-0"

ENERGY ABSORPTION ATTENUATOR

DO NOT ENTER

STA. 10+92

SCALE: 1"=20'-0"
20 0 20

NOTES:

1. SIGNS SHOWN IN A DASHED LINE STYLE ARE PLACED IN PHASE I & III AND WILL REMAIN IN PLACE FOR THE DURATION OF PHASE IV.
2. SEE TRAFFIC CONTROL PLAN - PHASE I FOR LEGEND & ABBREVIATIONS.
3. TEMPORARY TRAFFIC BARRIER FROM STA 6+90 LT TO 10+29 LT IS LEFT IN PLACE FROM PHASE III.
4. TEMPORARY LETTERS AND SYMBOLS PLACED IN PHASE III AND WILL REMAIN IN PLACE FOR PHASE IV.
5. SEE TRAFFIC CONTROL NOTES SHEET FOR ITEM PAYMENT DETAILS.
6. OBJECT MARKER TO BE INSTALLED AT END OF BARRIER TAPER. BOTTOM OF OBJECT MARKER SHALL BE 6" ABOVE TOP OF TEMPORARY TRAFFIC BARRIER. ATTACHMENT OF OBJECT MARKER POST TO BARRIER SHALL BE APPROVED BY THE ENGINEER.

PROJECT NAME: BENNINGTON
PROJECT NUMBER: BRF 1000(16)

FILE NAME: z88J087bdr_tcp04.dgn
PROJECT LEADER: R. HEBERT
DESIGNED BY: D. BURHANS
TRAFFIC CONTROL PLAN - PHASE IV

PLOT DATE: 8/7/2014
DRAWN BY: T. KELLEY
CHECKED BY: D. BRYANT
SHEET 23 OF 75

SIGN #	DESCRIPTION	SIZE	QTY	SUPPORT
D9-2	HOSPITAL	24x24	4	4 - POSTS (1/SIGN ASSEMBLY)
M6-1	DIRECTIONAL ARROW L OR R	21x15	3	
M6-3	DIRECTIONAL ARROW	21x15	1	
R11-4	ROAD CLOSED TO THRU TRAFFIC	60X30	2	4 - POSTS (2/SIGN)
W20-1	ROAD WORK AHEAD	48X48	2	4 - POSTS (2/SIGN)
W20-1	ROAD WORK 500FT	48X48	2	4 - POSTS (2/SIGN)
W20-3	BRIDGE CLOSED AHEAD	48X48	1	2 - POSTS (2/SIGN)
W20-20	DETOUR 500FT	48X48	3	6 - POSTS (2/SIGN)
W20-20	DETOUR AHEAD	48X48	1	2 - POSTS (2/SIGN)
VC-869	SIDE ROAD WORK AHEAD	48X48	4	8 - POSTS (2/SIGN)
VC-869	SIDE ROAD WORK RIGHT	48X48	1	2 - POSTS (2/SIGN)
VC-869	SIDE ROAD WORK LEFT	48X48	2	4 - POSTS (2/SIGN)
*	BENMONT AVE DETOUR LEFT	30X45	1	2 - POSTS (2/SIGN)
*	BENMONT AVE DETOUR RIGHT	30X45	2	4 - POSTS (2/SIGN)
*	BENMONT AVE DETOUR STRAIGHT	30X51	2	4 - POSTS (2/SIGN)
*	BENMONT AVE END DETOUR	24X37	1	2 - POSTS (2/SIGN)
*	BENMONT AVE SIDEWALK CLOSED	54X36	3	6 - POSTS (2/SIGN)

* SEE SIGN DETAIL SHEET

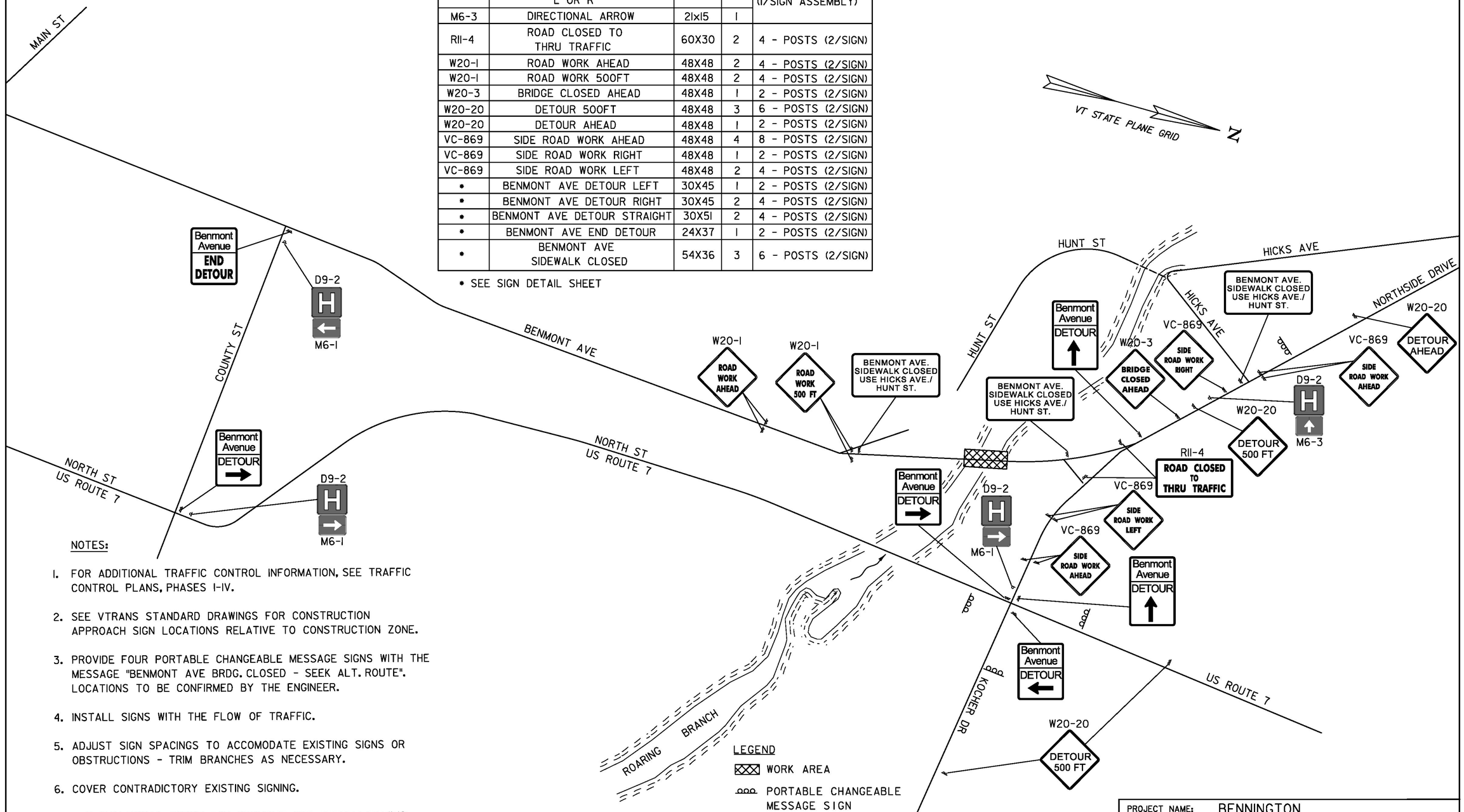

NOTES:

1. FOR ADDITIONAL TRAFFIC CONTROL INFORMATION, SEE TRAFFIC CONTROL PLANS, PHASES I-IV.
2. SEE VTRANS STANDARD DRAWINGS FOR CONSTRUCTION APPROACH SIGN LOCATIONS RELATIVE TO CONSTRUCTION ZONE.
3. PROVIDE FOUR PORTABLE CHANGEABLE MESSAGE SIGNS WITH THE MESSAGE "BENMONT AVE BRDG. CLOSED - SEEK ALT. ROUTE". LOCATIONS TO BE CONFIRMED BY THE ENGINEER.
4. INSTALL SIGNS WITH THE FLOW OF TRAFFIC.
5. ADJUST SIGN SPACINGS TO ACCOMODATE EXISTING SIGNS OR OBSTRUCTIONS - TRIM BRANCHES AS NECESSARY.
6. COVER CONTRADICTORY EXISTING SIGNING.
7. SEE SIGN DETAIL SHEET FOR BENMONT AVE DETOUR SIGNING DETAILS.

PROJECT NAME: BENNINGTON
PROJECT NUMBER: BRF 1000(16)

FILE NAME: z881087bdr_tcpsigns.dgn
PROJECT LEADER: R. HEBERT
DESIGNED BY: D. BURHANS
DETOUR SIGNING PLAN

PLOT DATE: 8/7/2014
DRAWN BY: A. GREENLAW
CHECKED BY: D. BRYANT
SHEET 24 OF 75

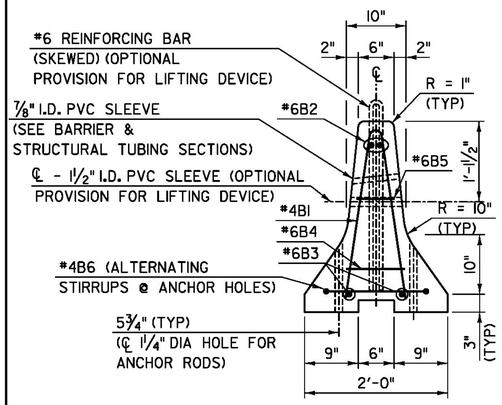

TYPICAL SECTION

SCALE 1"=1'-0"

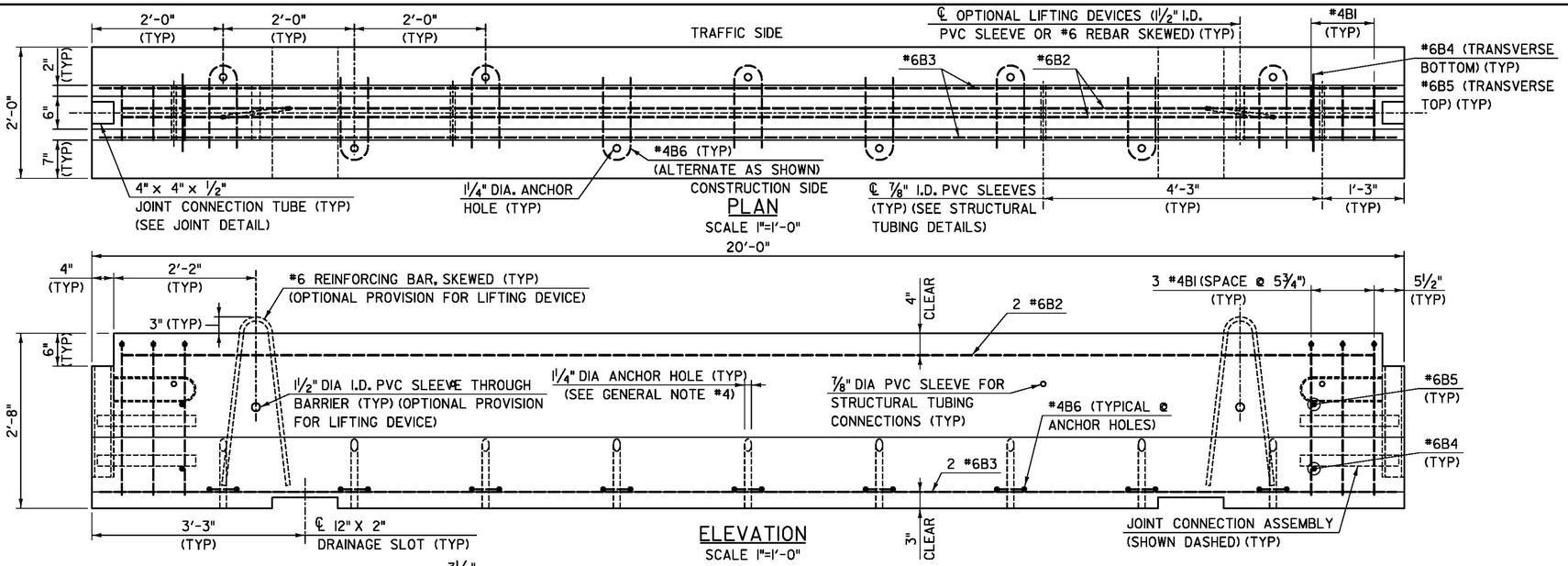

PLAN

SCALE 1"=1'-0"

ELEVATION

SCALE 1"=1'-0"

GENERAL NOTES

1. TEMPORARY TRAFFIC BARRIER-BRACED SHALL BE FURNISHED BY THE CONTRACTOR AND PAYMENT SHALL BE INCLUDED IN PAY ITEM 900.645 SPECIAL PROVISION (TRAFFIC CONTROL, ALL INCLUSIVE). CONCRETE BARRIER AND ALL ATTACHMENTS SHALL BE FABRICATED IN ACCORDANCE WITH SECTION 621. ALL BARRIER UNITS FOR BRACED SYSTEMS SHALL BE 20' LONG.

2. TEMPORARY TRAFFIC BARRIER-BRACED DETAILS, AS SHOWN IN THESE PLANS, ARE IN COMPLIANCE WITH REQUIREMENTS PER UPDATED NCHRP REPORT 350 FOR TEST NO. 3-11, TL-3 CRASH TESTED BY MIDWEST ROADSIDE SAFETY; NY BOX BEAM STIFFENING OF UNANCHORED TCB, MARCH 2008. THE BARRIER SYSTEM TESTED WITH A 27.6" DYNAMIC DEFLECTION AND ALLOWS FOR PLACEMENT AT A MINIMUM 12" DISTANCE BETWEEN BARRIERS AND EDGE OF BRIDGE DECK.

3. A MINIMUM OF TWO BARRIER UNITS WITH BRACED JOINTS ARE REQUIRED TO BE PLACED BEYOND BOTH ENDS OF THE BRIDGE WORK AREA FOR SPEEDS GREATER THAN 45 MPH. FOR SPEEDS ≤ 45 MPH, A MINIMUM OF ONE BRACED BARRIER IS REQUIRED TO BE FULLY SET BEYOND EACH END OF BRIDGE WORK AREA.

4. THE LAST CONCRETE BARRIER UNIT, AT EACH END OF BARRIER LAYOUT, SHALL BE ANCHORED A MINIMUM 18" BELOW THE ROADWAY SURFACE. REQUIRED 1" DIA. ANCHOR RODS (A36 STEEL) SHALL BE INSTALLED WITH 5 ANCHORS ON THE TRAFFIC SIDE OF BARRIER AND 4 ON THE CONSTRUCTION SIDE. IF THE END(S) OF THE BRACED CONCRETE BARRIER SYSTEM EXTENDS 50' OR MORE BEYOND LIMITS OF BRIDGE WORK THE LAST BARRIER UNIT DOES NOT REQUIRE ANCHORAGE.

5. TEMPORARY TRAFFIC BARRIER - BRACED MAY BE INSTALLED WITH A 230' MINIMUM RADIUS. GAPS CREATED BETWEEN STRUCTURAL TUBES AND CONCRETE BARRIER, DURING A RADIAL LAYOUT, SHALL BE SHIMMED WITH 8"x8"x1/2" PLATES & FENDER WASHERS TO FIRMLY ATTACH STRUCTURAL TUBING TO BARRIER.

6. THE CONTRACTOR SHALL FURNISH AND INSTALL APPROVED RETROREFLECTIVE DELINEATORS AT 25-FOOT INTERVALS ALONG TOP AND/OR ONE FOOT DOWN THE SIDE OF PORTABLE CONCRETE BARRIER. PAYMENT SHALL BE INCLUDED IN ITEM 900.645 "SPECIAL PROVISION (TRAFFIC CONTROL, ALL INCLUSIVE).". THE COLOR OF DELINEATORS SHALL, IN ALL INSTANCES, CONFORM TO THE COLOR OF EDGE LINE MARKINGS. DELINEATORS SUPPLEMENT, BUT DO NOT REPLACE, THE NEED FOR RETROREFLECTIVE SOLID EDGE LINE MARKINGS.

MATERIAL NOTES

1. BARRIERS SHALL BE LIGHT COLORED CLASS AA CONCRETE, WITH MINIMUM COMPRESSIVE STRENGTH OF 4000 psi, AND SHALL HAVE A SMOOTH UNIFORM SURFACE FREE OF DEFECTS AND IRREGULARITIES. CASTING DATE SHALL BE SHOWN ON BARRIER. ALL EXPOSED EDGES OF CONCRETE SHALL BE CHAMFERED 3/4", UNLESS OTHERWISE NOTED.

2. ALL REINFORCING STEEL SHALL BE AASHTO M31 (ASTM A615) GRADE 60. ALL REINFORCEMENT SHALL HAVE 1 1/2" MINIMUM CLEAR COVER, UNLESS OTHERWISE NOTED.

3. STRUCTURAL STEEL, EXCEPT THE STEEL TUBES, SHALL BE AASHTO M270 GRADE 50. ALL STEEL SHALL BE FABRICATED IN ACCORDANCE WITH SECTION 506.

4. STEEL TUBES, 6x6x3/16 & 4x4x1/2, SHALL BE ASTM A 500 GRADE B OR C. THE 6x6x3/16 TUBES SHALL BE 12' LONG AND GALVANIZED IN ACCORDANCE WITH SUBSECTION 726.08.

5. A MINIMUM OF 2 RECESSED LIFTING DEVICES, EACH WITH THE CAPACITY TO LIFT A MASS OF 6 TONS (MINIMUM), SHALL BE INSTALLED TO EACH BARRIER UNIT. TWENTY FOOT LONG CONCRETE BARRIER UNITS ARE APPROXIMATELY 400 LBS./FT.

6. DELINEATORS SHALL BE ATTACHED TO BARRIER USING AN APPROVED ADHESIVE MATERIAL OR AS SHOWN ON THIS SHEET.

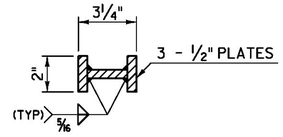

SECTION D-D

SCALE 3" = 1'-0"

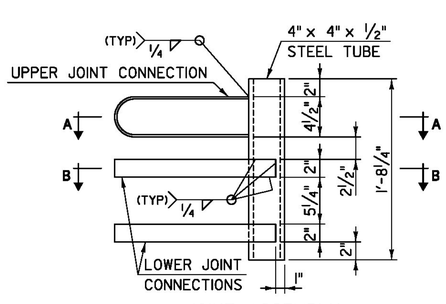

JOINT ASSEMBLY

SCALE 1 1/2" = 1'-0"

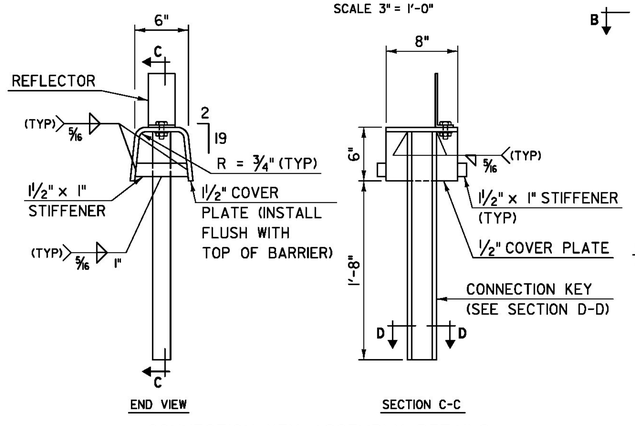

CONNECTION KEY ASSEMBLY DETAILS

SCALE 1 1/2" = 1'-0"

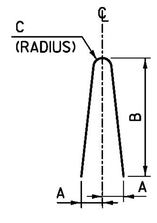

TYPE "I" REBAR

NOT TO SCALE

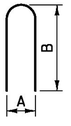

TYPE "II" REBAR

NOT TO SCALE

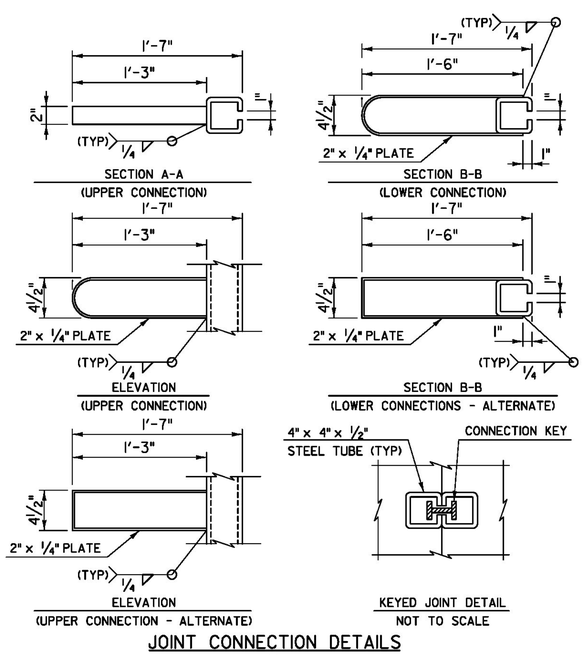

JOINT CONNECTION DETAILS

SCALE 1 1/2" = 1'-0"
(EXCEPT AS NOTED)

REINFORCING SCHEDULE (PER 20' BARRIER UNIT)

MARK	SIZE	LENGTH	# PIECES	TYPE	A	B	C	LOCATION
B1	#4	4'-10"	6	I	5"	2'-4"	1"	STIRRUPS
B2	#6	19'-1"	2	—				LONGITUDINAL (TOP)
B3	#6	19'-9"	2	—				LONGITUDINAL (BOTTOM)
B4	#6	1'-2"	2	—				TRANSVERSE (BOTTOM)
B5	#6	6"	2	—				TRANSVERSE (TOP)
B6	#4	2'-9"	9	II	5"	1'-3"		STIRRUPS

PROJECT NAME: BENNINGTON
PROJECT NUMBER: BRF 1000(16)

FILE NAME: x88J087ttb.dgn
PROJECT LEADER: R. HEBERT
DESIGNED BY: R. HEBERT
TEMPORARY TRAFFIC BARRIER BRACED 1

PLOT DATE: 8/29/2014
DRAWN BY: S. MORGAN
CHECKED BY: D. BURHANS
SHEET 25 OF 75

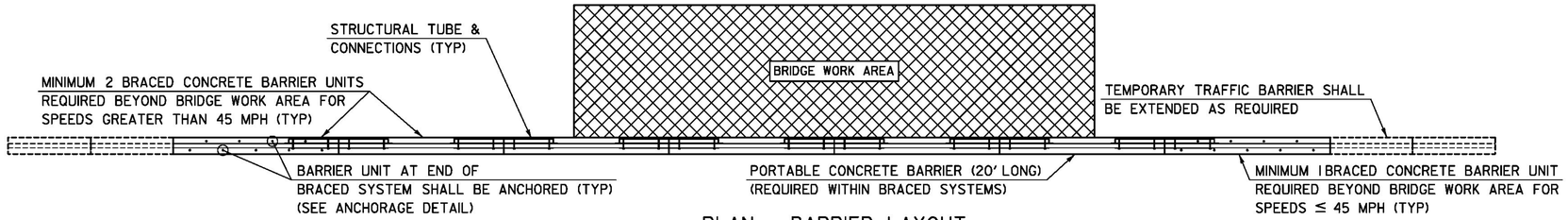

PLAN - BARRIER LAYOUT
NOT TO SCALE

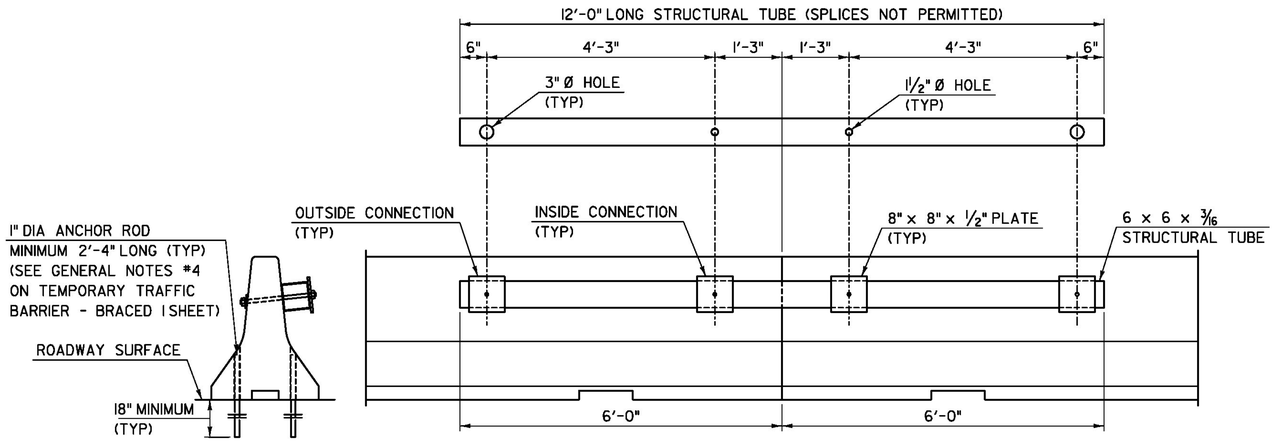

ANCHORAGE DETAIL
SCALE 3/4"=1'-0"

STRUCTURAL TUBING DETAILS
SCALE 3/4"=1'-0"

PVC SLEEVE OPENINGS SHALL BE MODIFIED/DRILLED AS REQUIRED TO PROPERLY ALIGN STRUCTURAL TUBE BRACING UNITS FOR CURVED ALIGNMENTS

THE PRESENCE OF NORMAL HOLES WHICH HAVE BEEN MODIFIED/DRILLED WILL NOT AFFECT THE REUSE OF CONCRETE BARRIER UNITS

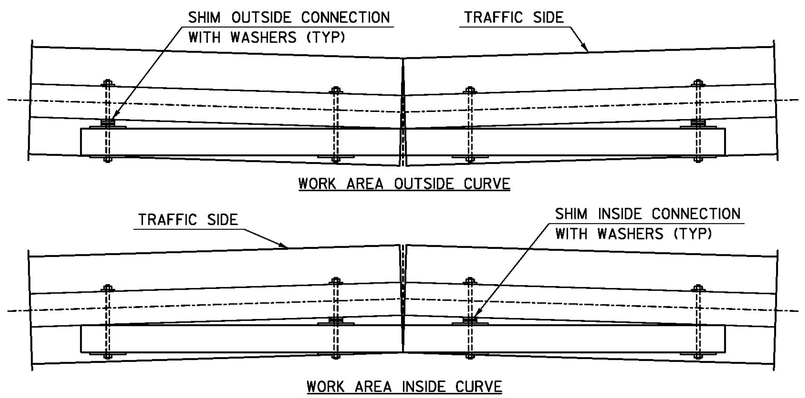

TUBE CONNECTIONS (CURVED ALIGNMENT)
SCALE 3/4"=1'-0"

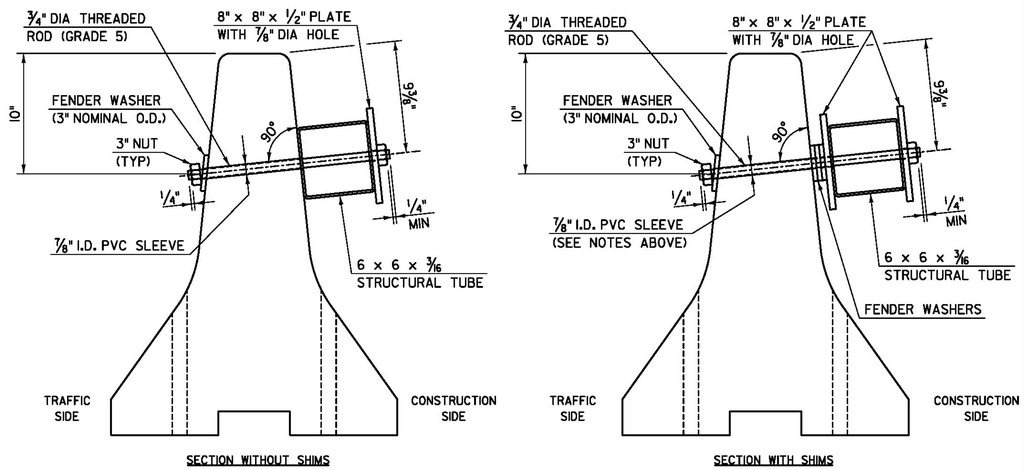

BARRIER & STRUCTURAL TUBING SECTIONS
SCALE 1"=1'-0"

PROJECT NAME:	BENNINGTON
PROJECT NUMBER:	BRF 1000(16)
FILE NAME: x88J087++b.dgn	PLOT DATE: 8/7/2014
PROJECT LEADER: R. HEBERT	DRAWN BY: S. MORGAN
DESIGNED BY: R. HEBERT	CHECKED BY: D. BURHANS
TEMPORARY TRAFFIC BARRIER BRACED 2	SHEET 26 OF 75

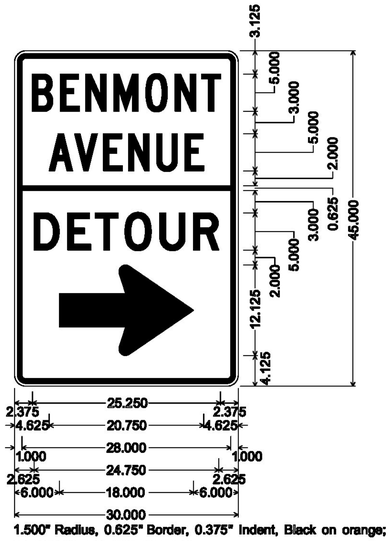

1.500" Radius, 0.625" Border, 0.375" Indent, Black on orange;
"BENMONT" C; "AVENUE" C;
"DETOUR" D;
Standard Arrow Custom 18.000" X 12.125" 0";

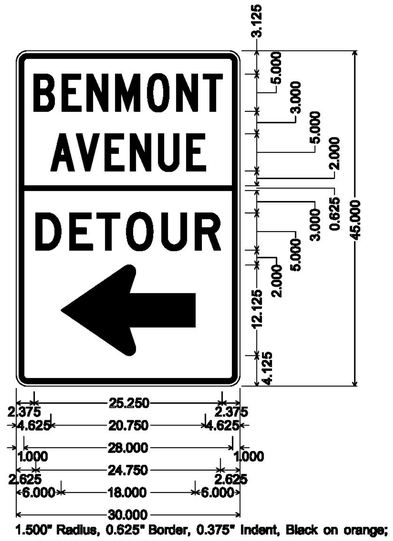

1.500" Radius, 0.625" Border, 0.375" Indent, Black on orange;
"BENMONT" C; "AVENUE" C;
"DETOUR" D;
Standard Arrow Custom 18.000" X 12.125" 180";

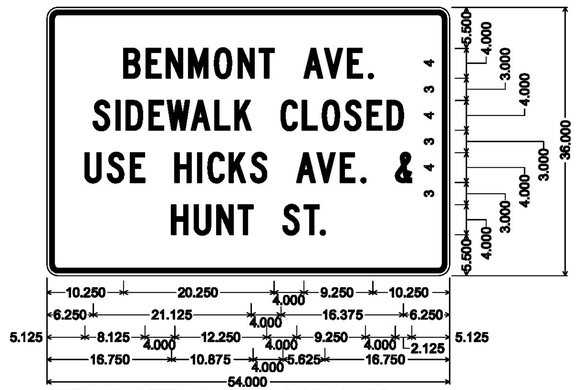

1.500" Radius, 0.625" Border, 0.375" Indent, Black on Fluorescent orange;
"BENMONT AVE." C; "SIDEWALK CLOSED" C;
"USE HICKS AVE. &" C; "HUNT ST." C;

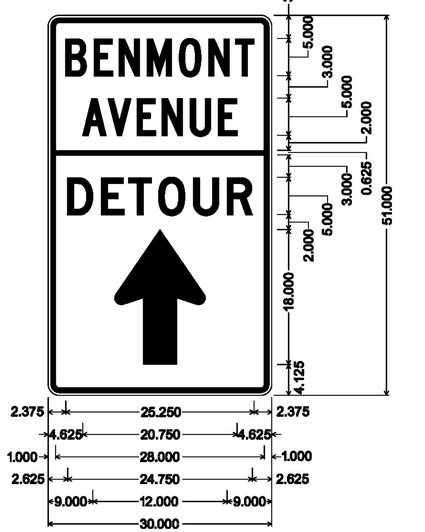

1.500" Radius, 0.625" Border, 0.375" Indent, Black on orange;
"BENMONT" C; "AVENUE" C;
"DETOUR" D;
Standard Arrow Custom 18.000" X 12.000" 90";

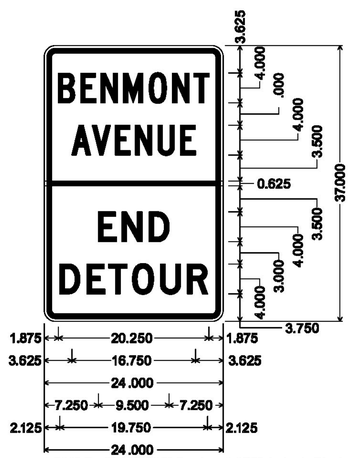

1.500" Radius, 0.625" Border, 0.375" Indent, Black on orange;
"BENMONT" C;
"AVENUE" C; "END" D;
"DETOUR" D;

PROJECT NAME:	BENNINGTON
PROJECT NUMBER:	BRF 1000(16)
FILE NAME: z881087bdr_tcpsigndet.dgn	PLOT DATE: 8/7/2014
PROJECT LEADER: R. HEBERT	DRAWN BY: J. BLANCHARD
DESIGNED BY: D. BURHANS	CHECKED BY: D. BRYANT
SIGN DETAIL SHEET	SHEET 27 OF 75

TRAFFIC SIGN SUMMARY

MARKER, STATION, OR SIGN NUMBER	SIGN LEGEND	SIGN DIMENSIONS EA	WIDTH (In)	HEIGHT (In)	NEW & SALVAGED SIGNS "A"	"B"	SALV SIGN	SALV TIS	NEW SIGN POSTS NO. OF POSTS	SQUARE STEEL (In) 1.75 (lb/ft 1.88)	2.00 (lb/ft 2.42)	2.50 (lb/ft 3.35)	ANCHOR	SLEEVE	REMARKS	SIGN DETAIL DETAIL ON SHEET NUMBER	STD. SHEET NUMBER
7+10.76, RT	BRIDGE 57 TH-7	1	6	8	0.33				1		10'		1		BRIDGE NO. PLAQUE VD-701		T-42
10+13.51, LT		1	6	8	0.33				1		11'		1				
					SF	SF	EA.	SF	EA.	FT	FT	FT	EA.	EA.			

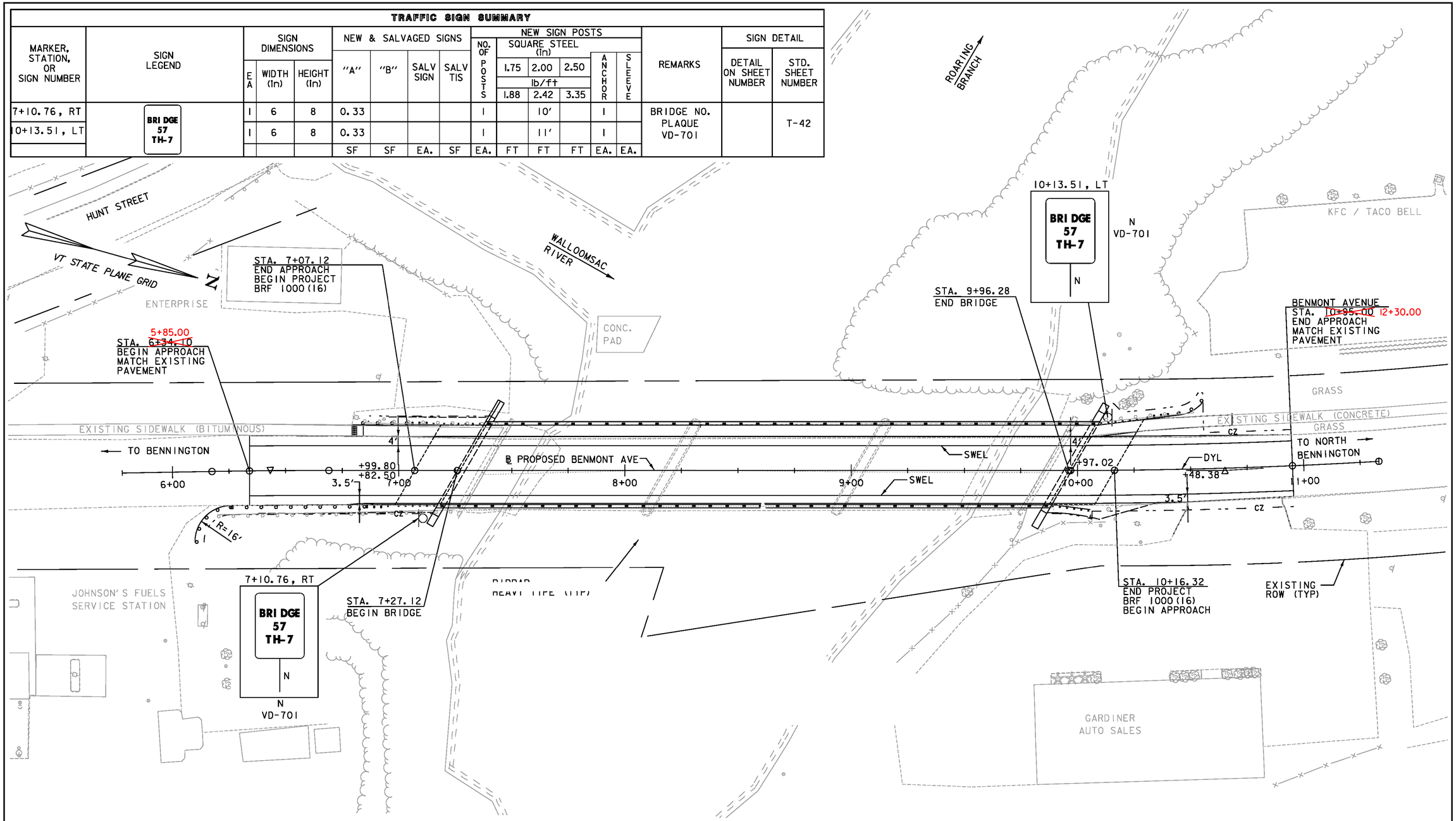

DATUM	
VERTICAL	NAVD 88
HORIZONTAL	NAD 83 (92)
ADJUSTMENT	COMPASS

STRIPING LEGEND

DYL - 4" DOUBLE YELLOW LINE
SWEL - 4" SINGLE WHITE EDGE LINE

4" INCH YELLOW LINE
~~6+34.10 10+95.00~~, LT & RT
5+10.00 - 12+30.00

4" INCH WHITE LINE
~~6+34.10 10+95.00~~, LT & RT
5+10.00 - 12+30.00

SCALE: 1"=20'-0"
20 0 20

PROJECT NAME: BENNINGTON
PROJECT NUMBER: BRF 1000(16)

FILE NAME: z881087bdr_ss.dgn
PROJECT LEADER: R. HEBERT
DESIGNED BY: D. BRYANT
SIGNING AND STRIPING PLAN

PLOT DATE: 8/7/2014
DRAWN BY: P. MCCLURE
CHECKED BY: D. BRYANT
SHEET 28 OF 75

SOIL CLASSIFICATION

AASHTO	
A1	Gravel and Sand
A3	Fine Sand
A2	Silty or Clayey Gravel and Sand
A4	Silty Soil - Low Compressibility
A5	Silty Soil - Highly Compressible
A6	Clayey Soil - Low Compressibility
A7	Clayey Soil - Highly Compressible

ROCK QUALITY DESIGNATION

R.Q.D. (%)	ROCK DESCRIPTION
<25	Very Poor
25 to 50	Poor
51 to 75	Fair
76 to 90	Good
>90	Excellent

SHEAR STRENGTH

UNDRAINED SHEAR STRENGTH IN P.S.F.	CONSISTENCY
<250	Very Soft
250-500	Soft
500-1000	Med. Stiff
1000-2000	Stiff
2000-4000	Very Stiff
>4000	Hard

CORRELATION GUIDE OF "N" TO DENSITY/CONSISTENCY

DENSITY (GRANULAR SOILS)		CONSISTENCY (COHESIVE SOILS)	
N	DESCRIPTIVE TERM	N	DESCRIPTIVE TERM
<5	Very Loose	<2	Very Soft
5-10	Loose	2-4	Soft
11-24	Med. Dense	5-8	Med. Stiff
25-50	Dense	9-15	Stiff
>50	Very Dense	16-30	Very Stiff
		31-60	Hard
		>60	Very Hard

COMMONLY USED SYMBOLS

▼	Water Elevation
⊗	Standard Penetration Boring
⊕	Auger Boring
⊙	Rod Sounding
S	Sample
N	Standard Penetration Test Blow Count Per Foot For: 2" O.D. Sampler 1 3/8" I.D. Sampler Hammer Weight Of 140 Lbs. Hammer Fall Of 30"
VS	Field Vane Shear Test
US	Undisturbed Soil Sample
B	Blast
DC	Diamond Core
MD	Mud Drill
WA	Wash Ahead
HSA	Hollow Stem Auger
AX	Core Size 1 1/8"
BX	Core Size 1 5/8"
NX	Core Size 2 1/8"
M	Double Tube Core Barrel Used
LL	Liquid Limit
PL	Plastic Limit
PI	Plasticity Index
NP	Non Plastic
w	Moisture Content (Dry Wgt. Basis)
D	Dry
M	Moist
MTW	Moist To Wet
W	Wet
Sat	Saturated
Bo	Boulder
Gr	Gravel
Sa	Sand
Si	Silt
Cl	Clay
HP	Hardpan
Le	Ledge
NLTD	No Ledge To Depth
CNPF	Can Not Penetrate Further
TLOB	To Ledge Or Boulder
NR	No Recovery
Rec.	Recovery
%Rec.	Percent Recovery
RQD	Rock Quality Designation
CBR	California Bearing Ratio
<	Less Than
>	Greater Than
R	Refusal (N > 100)

COLOR			
blk	Black	pnk	Pink
bl	Blue	pu	Purple
brn	Brown	rd	Red
dk	Dark	tn	Tan
gry	Gray	wh	White
gn	Green	yel	Yellow
lt	Light	mlto	Multicolored
or	Orange		

DEFINITIONS (AASHTO)

BEDROCK (LEDGE) - Rock in its native location of indefinite thickness.

BOULDER - A rock fragment with an average dimension > 12 inches.

COBBLE - Rock fragments with an average dimension between 3 and 12 inches.

GRAVEL - Rounded particles of rock < 3" and > 0.0787" (#10 sieve).

SAND - Particles of rock < 0.0787" (#10 sieve) and > 0.0029" (#200 sieve).

SILT - Soil < 0.0029" (#200 sieve), non or slightly plastic and exhibits no strength when air-dried.

CLAY - Fine grained soil, exhibits plasticity when moist and considerable strength when air-dried.

VARVED - Alternate layers of silt and clay.

HARDPAN - Extremely dense soil, cemented layer, not softened when wet.

MUCK - Soft organic soil (containing > 10% organic material.

MOISTURE CONTENT - Weight of water divided by dry weight of soil.

FLOWING SAND - Granular soil so saturated (loose) that it flows into drill casing during extraction of wash rod.

STRIKE - Angle from magnetic north to line of intersection of bed with a horizontal plane.

DIP - Inclination of bed with a horizontal plane.

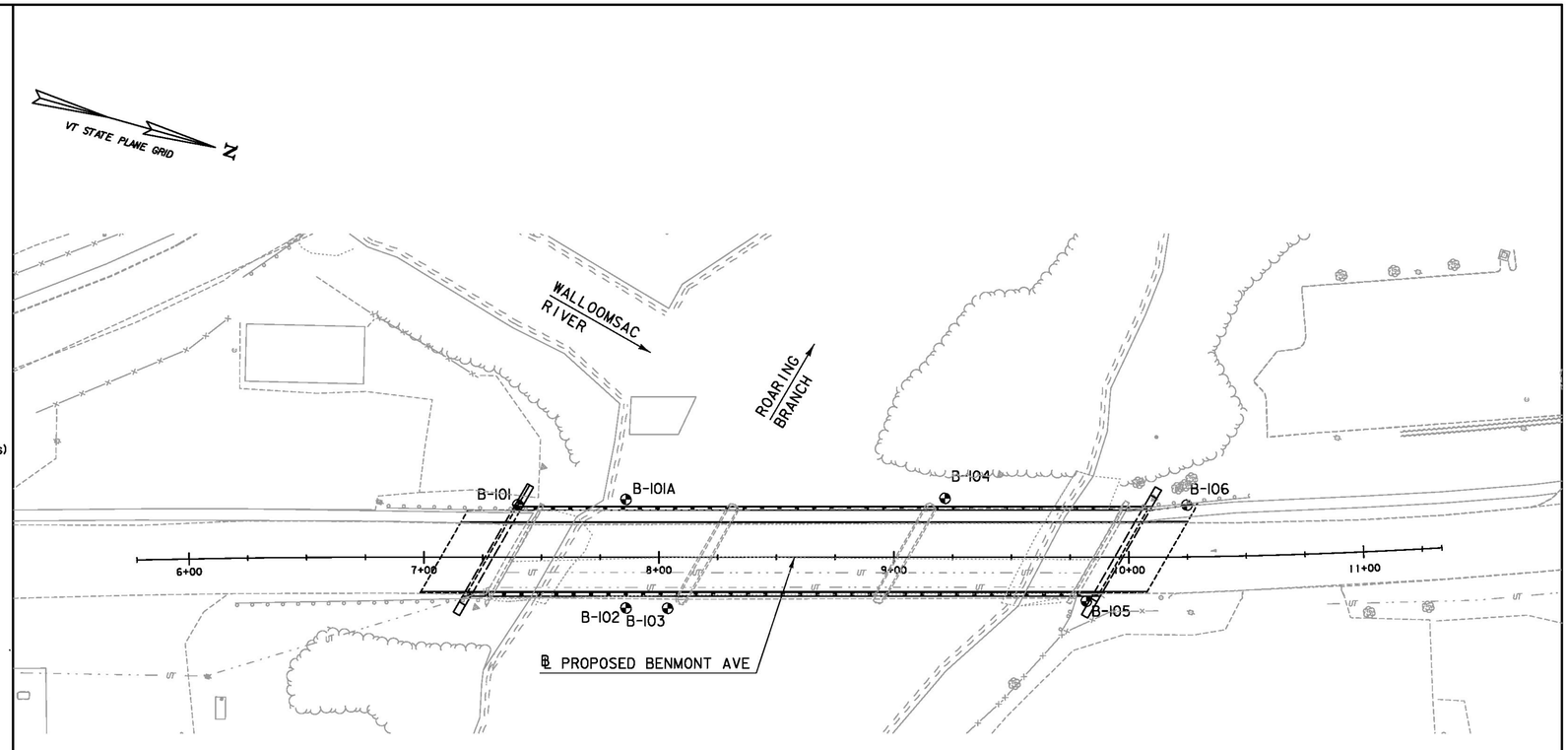

BORING LAYOUT

SCALE 1" = 30'-0"
30 0 30

GENERAL NOTES

1. The subsurface explorations shown herein were made between November 8, 2011 and November 17, 2011, and between March 1, 2012 and March 20, 2012 by VTrans Geotechnical Section.
2. Soil and rock classifications, properties and descriptions are based on engineering interpretation from available subsurface information by VTrans Geotechnical Section and may reflect actual variations in sub-surface conditions that may be encountered between individual boring or sample locations.
3. Observed water levels and/or conditions indicated are as recorded at the time of exploration and may vary according to the prevailing rainfall, methods of exploration and other factors.
4. Engineering judgement was exercised in preparing the sub-surface information presented herein. Analysis and interpretation of sub-surface data was performed and interpreted for Agency design and estimating purposes. Presentation of the information in the Contract is intended to provide the Contractor access to the same data available to the Agency. The subsurface information is presented in good faith and is not intended as a substitute for personal investigation, independent interpretation, independent analysis or judgement by the Contractor.
5. Pictorial structure details shown on the boring plan layout or soils profile are for illustrative purposes only and may not accurately portray final contract details.
6. Terminology used on boring logs to describe the hardness, degree of weathering, and spacing of fractures, joints and other discontinuities in the bedrock is defined in the AASHTO Manual on Subsurface Investigations, 1988.

BORING LAYOUT

HOLE NO.	STATION	OFFSET	NORTHING	EASTING	GROUND ELEVATION	ELEVATION TLOB
B-101	7+40.4	22.1 LT	143977.93	1452288.69	631.7	601.7
B-101A	7+86.1	24.6 LT	144021.20	1452273.94	610.4	595.9
B-102	7+86.1	21.6 RT	144033.71	1452318.42	614.0	574.0
B-103	8+3.7	21.7 RT	144050.74	1452313.75	614.0	569.2
B-104	9+21.8	25.1 LT	144151.71	1452236.77	614.6	606.6
B-105	9+84.9	18.7 RT	144224.37	1452261.86	630.6	596.1
B-106	10+25.0	22.0 LT	144245.32	1452208.57	630.0	601.0

PROJECT NAME: BENNINGTON
PROJECT NUMBER: BRF 1000(16)

FILE NAME: z88J087bdr_bor_inf.dgn
PROJECT LEADER: R. HEBERT
DESIGNED BY: D. MYERS
BORING INFORMATION & LAYOUT SHEET

PLOT DATE: 8/7/2014
DRAWN BY: S. MORGAN
CHECKED BY: R. HEBERT

STATE OF VERMONT
AGENCY OF TRANSPORTATION
MATERIALS & RESEARCH SECTION
SUBSURFACE INFORMATION

BORING LOG

BENNINGTON
BRF 1000(16)S
TH-7 BR-57

Boring No.: **B-101**
Page No.: 1 of 1
Pin No.: 88J087
Checked By: NSM

Boring Crew: GARROW, SALISBURY
Date Started: 11/08/11 Date Finished: 2/29/12
VTSPG NAD83: N 143977.93 ft E 1452288.69 ft
Station: 7+40.42 Offset: -22.13
Ground Elevation: 631.66 ft

	Casing	Sampler
Type:	WB	SS
I.D.:	4 in	1.5 in
Hammer Wt:	N.A.	140 lb.
Hammer Fall:	N.A.	30 in.
Hammer/Rod Type:	Auto/AWJ	
Rig:	CME 45C TRACK	C_E = 1.34

Groundwater Observations

Date	Depth (ft)	Notes
02/29/12	17.8	AM

Depth (ft)	Strata (1)	CLASSIFICATION OF MATERIALS (Description)	Run (Dip deg.)	Core Rec.: % (RQD %)	Drill Rate minutes/ft	Blows/6" (N Value)	Moisture Content %	Gravel %	Sand %	Fines %
		A-1-b, SiGrSa, brn, MTD, Rec. = 1.1 ft, Broken red brick or clay tile was within sample.				2-4-7-4 (11)	14.6	34.9	45.0	20.1
5		A-1-a, SaGr, brn, MTW, Rec. = 0.8 ft, Some broken rock was within sample.				2-3-1-2 (4)	16.2	56.2	36.9	6.9
		Field Note:, NXDC, Cobbles								
BOTTOM OF ABUT. NO. 1 ELEV. = 622.25		Field Note:, No Recovery				1-3-5-4 (8)				
10		Field Note:, NXDC, Cobbles								
		Field Note:, NXDC, Cobbles								
		Visual Classification, Mostly Broken Rock., brn, Moist, Rec. = 0.6 ft				3-3-8-25 (11)	10.5	72.2	22.7	5.1
15		Field Note:, NXDC, Boulder								
20		Field Note:, NXDC, Cobbles								
25		A-1-a, SaGr, grn-brn, Moist, Rec. = 0.7 ft, Broken Rock was within sample.				11-R@3.5"	10.7	72.9	23.3	3.8
		Visual Classification, Mostly Broken Rock., grn-brn, Moist, Rec. = 0.5 ft				82-R@2.5"	8.8	52.2	29.4	18.4
APPROX. PILE TIP @ ABUT. NO. 1 ELEV. = 601.66		30.0 ft - 33.0 ft, Gray, Meta-Limestone, Moderately hard, Very slightly weathered, Poor rock, NXMDC, Fair recovery and very poor RQD. RMR = 39	1 (10)	83 (0)	9 4 3	Top of Bedrock @ 30.0 ft				
35		33.0 ft - 36.0 ft, Gray, Meta-Limestone, Moderately hard, Very slightly weathered, Poor rock, NXMDC, Closely spaced jointing.	2 (10)	80 (8)	3 4 3					
		36.0 ft - 38.0 ft, Gray, Medium grained Quartzite, Hard, Very slightly weathered, Poor rock, Very poor RQD. RMR = 39			3 3					
40		Hole stopped @ 38.0 ft								

Remarks:
1. Stopped drilling on 11/08/12 and returned on 02/28/12 to complete hole.

Notes:
1. Stratification lines represent approximate boundary between material types. Transition may be gradual.
2. N Values have not been corrected for hammer energy. C_E is the hammer energy correction factor.
3. Water level readings have been made at times and under conditions stated. Fluctuations of groundwater may occur due to other factors than those present at the time measurements were made.

BORING LOG 2 BENNINGTON BRF 1000(16)S.GPJ VERMONT AOT.GDT 4/4/12

STATE OF VERMONT
AGENCY OF TRANSPORTATION
MATERIALS & RESEARCH SECTION
SUBSURFACE INFORMATION

BORING LOG

BENNINGTON
BRF 1000(16)S
TH-7 BR-57

Boring No.: **B-101A**
Page No.: 1 of 1
Pin No.: 88J087
Checked By: NSM

Boring Crew: GARROW, SALISBURY
Date Started: 11/09/11 Date Finished: 11/09/11
VTSPG NAD83: N 144021.21 ft E 1452273.94 ft
Station: 7+86.10 Offset: -24.59
Ground Elevation: 610.39 ft

	Casing	Sampler
Type:	WB	SS
I.D.:	4 in	1.5 in
Hammer Wt:	N.A.	140 lb.
Hammer Fall:	N.A.	30 in.
Hammer/Rod Type:	Auto/AWJ	
Rig:	CME 45C TRACK	C_E = 1.34

Groundwater Observations

Date	Depth (ft)	Notes
11/09/11	1.5	PM

Depth (ft)	Strata (1)	CLASSIFICATION OF MATERIALS (Description)	Run (Dip deg.)	Core Rec.: % (RQD %)	Drill Rate minutes/ft	Blows/6" (N Value)	Moisture Content %	Gravel %	Sand %	Fines %
5		A-1-b, GrSa, brn, Moist, Rec. = 0.3 ft, Broken rock/ Wood/ & Roots were within sample. Field Note:, NXDC, Cobbles & Boulders				R@3.5"	21.0	32.0	57.3	10.7
10		A-2-4, SaSiGr (Till), gry, Moist, Rec. = 1.3 ft, Roller coned ahead.				5-14-15-25 (29)	7.9	49.4	24.4	26.2
		A-1-b, SaGr (Till), gry, Moist, Rec. = 1.3 ft				11-15-R@6.0"	9.4	61.6	20.7	17.7
15		14.5 ft - 19.5 ft, Light gray to dark gray, Meta-Limestone, Moderately hard, Very slightly weathered, Good rock, NXMDC, Weathered surface is light orange in color. RMR = 67	1 (65)	82 (72)	7 7 7 7 7	Top of Bedrock @ 14.5 ft				
20		19.5 ft - 24.5 ft, Dark gray, Meta-Limestone, Moderately hard, Very slightly weathered, Fair rock, NXMDC, Orange staining on weathered surfaces. RMR = 49	2 (65)	100 (44)	4 3 4 4 4					
25		Hole stopped @ 24.5 ft								

Notes:
1. Stratification lines represent approximate boundary between material types. Transition may be gradual.
2. N Values have not been corrected for hammer energy. C_E is the hammer energy correction factor.
3. Water level readings have been made at times and under conditions stated. Fluctuations of groundwater may occur due to other factors than those present at the time measurements were made.

BORING LOG 2 BENNINGTON BRF 1000(16)S.GPJ VERMONT AOT.GDT 4/4/12

PROJECT NAME: BENNINGTON
PROJECT NUMBER: BRF 1000(16)

FILE NAME: z88J087bdr_Blogs.dgn
PROJECT LEADER: R. HEBERT
DESIGNED BY: D. MYERS
BORING LOGS 1

PLOT DATE: 8/7/2014
DRAWN BY: S. MORGAN
CHECKED BY: R. HEBERT
SHEET 30 OF 75

STATE OF VERMONT
AGENCY OF TRANSPORTATION
MATERIALS & RESEARCH SECTION
SUBSURFACE INFORMATION

BORING LOG

BENNINGTON
BRF 1000(16)S
TH-7 BR-57

Boring No.: **B-102**
Page No.: 1 of 1
Pin No.: 88J087
Checked By: NSM

Boring Crew: GARROW, SALISBURY
Date Started: 11/10/11 Date Finished: 11/15/11
VTSPG NAD83: N 144033.71 ft E 1452318.42 ft
Station: 7+86.10 Offset: 21.61
Ground Elevation: 613.98 ft

	Casing	Sampler
Type:	WB	SS
I.D.:	4 in	1.5 in
Hammer Wt:	N.A.	140 lb.
Hammer Fall:	N.A.	30 in.
Hammer/Rod Type:	Auto/AWJ	
Rig:	CME 45C TRACK	C_E = 1.34

Groundwater Observations

Date	Depth (ft)	Notes
11/15/11	0.4	AM
11/16/11	0.0	AM

Depth (ft)	Strata (1)	CLASSIFICATION OF MATERIALS (Description)	Run (Dip deg.)	Core Rec.: % (RQD %)	Drill Rate minutes/ft	Blows/6" (N Value)	Moisture Content %	Gravel %	Sand %	Fines %
		Field Note:, NXDC, Boulder								
		A-1-a, Gr, brn, Moist, Rec. = 0.5 ft				3-8-8-8 (16)	7.3	82.2	15.2	2.6
		Field Note:, NXDC, Cobbles & Gravel								
10		A-1-b, SaGr, brn, Wet, Rec. = 0.5 ft				8-15-18-12 (33)	26.1	47.9	43.9	8.2
		Field Note:, NXDC, Cobbles & Gravel								
		A-2-4, SaSiGr, brn, Moist, Rec. = 0.8 ft				7-8-10-7 (18)	15.3	41.0	23.6	35.4
		A-4, SaSi, brn, Moist, Rec. = 0.9 ft				7-10-10-7 (20)	22.7	5.9	26.7	67.4
20		A-3, SaGrSi, brn, Moist, Rec. = 1.3 ft, Started mud drilling at 24.0 ft.				17-28-19-22 (47)	16.0	31.9	29.3	38.8
		Field Note:, No Recovery. Rock in end of sampler				18-15-8-10 (23)				
30		A-1-a, SaGr, brn, Moist, Rec. = 0.5 ft, Broken rock was within sample.				12-8-9-8 (17)	8.2	66.3	21.4	12.3
		Field Note:, NXDC, Cobbles								
		A-1-a, SiSaGr, red-brn, Moist, Rec. = 0.7 ft, Weathered rock was within sample.				4-R@3.5"	9.4	44.1	34.3	21.6
40		Field Note:, NXDC, Possible soft weathered rock	1 (-)	90 (0)	3 4 4 11 7	Top of Bedrock @ 40.0 ft				
		40.0 ft - 45.0 ft, Light gray, Meta-Limestone, Moderately hard, Moderately severe weathered, Very poor rock, NXMDC, Weathered surface is light orange and brown. RMR = 19								
		45.0 ft - 48.0 ft, Light gray, Meta-Limestone, Medium hard, Severely to moderately weathered, Very poor rock, NXMDC, Orange stained clay coating at 46.3 ft on rock surface (may be karst solution feature). RMR = 19	2 (-)	40 (0)	3 3 12					
50		48.0 ft - 53.0 ft, Dark gray, Limestone, and Phyllite. Medium to soft, Moderately severe weathered, Very poor rock, NXMDC, Rock is coated with thick orange/brown clay coating (may be karst solution feature). RMR = 19	3 (-)	74 (0)	3 2 5 4 2					
		Hole stopped @ 53.0 ft								

Notes:
1. Stratification lines represent approximate boundary between material types. Transition may be gradual.
2. N Values have not been corrected for hammer energy. C_E is the hammer energy correction factor.
3. Water level readings have been made at times and under conditions stated. Fluctuations of groundwater may occur due to other factors than those present at the time measurements were made.

BOTTOM OF EXISTING
PIER. NO. 1
ELEV. = 604.87 ±

STATE OF VERMONT
AGENCY OF TRANSPORTATION
MATERIALS & RESEARCH SECTION
SUBSURFACE INFORMATION

BORING LOG

BENNINGTON
BRF 1000(16)S
TH-7 BR-57

Boring No.: **B-103**
Page No.: 1 of 1
Pin No.: 88J087
Checked By: NSM

Boring Crew: GARROW, SALISBURY
Date Started: 11/16/11 Date Finished: 11/17/11
VTSPG NAD83: N 144050.74 ft E 1452313.75 ft
Station: 8+03.70 Offset: 21.73
Ground Elevation: 613.93 ft

	Casing	Sampler
Type:	WB	SS
I.D.:	4 in	1.5 in
Hammer Wt:	N.A.	140 lb.
Hammer Fall:	N.A.	30 in.
Hammer/Rod Type:	Auto/AWJ	
Rig:	CME 45C TRACK	C_E = 1.34

Groundwater Observations

Date	Depth (ft)	Notes
11/17/11	0.6	AM

Depth (ft)	Strata (1)	CLASSIFICATION OF MATERIALS (Description)	Run (Dip deg.)	Core Rec.: % (RQD %)	Drill Rate minutes/ft	Blows/6" (N Value)	Moisture Content %	Gravel %	Sand %	Fines %
		Field Note:, NXDC, Boulder								
		Field Note:, No Recovery, Stone in end of sampler				4-5-12-13 (17)				
		Field Note:, NXDC, Cobbles & Gravel								
10		A-1-b, GrSa, brn, Moist, Rec. = 0.8 ft				7-7-7-28 (14)	14.3	34.7	50.5	14.8
		Field Note:, NXDC, Cobbles & Gravel								
		A-4, SaGrSi, gry, Moist, Rec. = 1.2 ft				7-8-10-12 (18)	17.3	26.0	21.8	52.2
		Field Note:, NXDC, Cobbles & Gravel								
20		A-4, SaGrSl, gry, Moist, Rec. = 0.8 ft				3-7-10-17 (17)	11.3	32.7	28.6	38.7
		A-1-b, SaGr, gry, Moist, Rec. = 1.0 ft				8-18-16-13 (34)	10.5	49.1	33.9	17.0
		Field Note:, NXMDC, Boulder								
30		Field Note:, No Recovery				2-9-12-17 (21)				
		Field Note:, NXDC, Cobbles								
		A-4, SaGrSi, gry, Moist, Rec. = 0.6 ft, Weathered rock was within sample.				3-4-12-R@3.5"	19.1	34.5	25.0	40.5
40		Field Note:, NXDC, Cobbles								
		44.8 ft - 46.4 ft, Light gray, Phyllite, and meta-limestone. Moderately hard, Slightly weathered, Poor rock, NXMDC, RMR = 22 46.4 ft - 49.8 ft, Orange and light brown stained gray Phyllite, (may be karst solution feature). Very soft, Moderately severe weathered, Poor rock, RMR = 22	1 (65)	100 (6)	5 3 3 3 3 3	Top of Bedrock @ 44.8 ft				
50		49.8 ft - 54.8 ft, Light gray, Phyllite and Meta-Limestone, Moderately hard, Slightly weathered, Good rock, NXMDC, Light orange staining on weathered surfaces. RMR = 67	2 (65)	96 (54)	2 2 2 3 3 3					
		Hole stopped @ 54.8 ft								

Notes:
1. Stratification lines represent approximate boundary between material types. Transition may be gradual.
2. N Values have not been corrected for hammer energy. C_E is the hammer energy correction factor.
3. Water level readings have been made at times and under conditions stated. Fluctuations of groundwater may occur due to other factors than those present at the time measurements were made.

BORING LOG 2 BENNINGTON BRF 1000(16)S.GPJ VERMONT AOT.GDT 4/4/12

PROJECT NAME: BENNINGTON
PROJECT NUMBER: BRF 1000(16)

FILE NAME: z88J087bdr_Blogs.dgn
PROJECT LEADER: R. HEBERT
DESIGNED BY: D. MYERS
BORING LOGS 2

PLOT DATE: 8/7/2014
DRAWN BY: S. MORGAN
CHECKED BY: R. HEBERT
SHEET 31 OF 75

STATE OF VERMONT
AGENCY OF TRANSPORTATION
MATERIALS & RESEARCH SECTION
SUBSURFACE INFORMATION

BORING LOG

BENNINGTON
BRF 1000(16)S
TH-7 BR-57

Boring No.: **B-104**
Page No.: 1 of 1
Pin No.: 88J087
Checked By: NSM

Boring Crew: GARROW, SALISBURY
Date Started: 2/25/12 Date Finished: 2/27/12
VTSPG NAD83: N 144151.71 ft E 1452236.77 ft
Station: 9+21.77 Offset: -25.06
Ground Elevation: 614.6 ft

	Casing	Sampler
Type:	WB	SS
I.D.:	4 in	1.5 in
Hammer Wt:	N.A.	140 lb.
Hammer Fall:	N.A.	30 in.
Hammer/Rod Type:	Auto/AWJ	
Rig:	CME 45C TRACK	C_E = 1.34

Groundwater Observations		
Date	Depth (ft)	Notes
02/27/12	2.0	While drilling.

BOTTOM OF EXISTING PIER. NO. 2 ELEV. = 604.66 ±

Depth (ft)	Strata (1)	CLASSIFICATION OF MATERIALS (Description)	Run (Dip deg.)	Core Rec.: % (RQD %)	Drill Rate minutes/ft	Blows/6" (N Value)	Moisture Content %	Gravel %	Sand %	Fines %
5		Field Class:, NXDC, Cobbles								
		Field Class:, GrSa				5-11-5-15 (16)				
		Field Class:, NXDC, Cobbles								
10		8.0 ft - 13.0 ft, Gray to light gray, Meta-Limestone, Moderately hard, Very slightly weathered, Poor rock, NXMDC, Very poor RQD. Closely spaced jointing. Some joint surfaces contain iron staining. RMR = 39	1 (10)	100 (16)	10 3 3 4 5	Top of Bedrock @ 8.0 ft				
15		13.0 ft - 18.0 ft, Light gray, Meta-Limestone, Moderately hard, Very slightly weathered, Poor rock, NXMDC, Fair recovery and very poor RQD. Closely spaced jointing. Some joint surfaces contain iron staining. RMR = 39	2 (10)	60 (12)	4 4 3 3 2					
		Hole stopped @ 18.0 ft								
20										
25										

Notes:
1. Stratification lines represent approximate boundary between material types. Transition may be gradual.
2. N Values have not been corrected for hammer energy. C_E is the hammer energy correction factor.
3. Water level readings have been made at times and under conditions stated. Fluctuations of groundwater may occur due to other factors than those present at the time measurements were made.

BORING LOG 2 BENNINGTON BRF 1000(16)S.GPJ VERMONT AOT.GDT 4/4/12

STATE OF VERMONT
AGENCY OF TRANSPORTATION
MATERIALS & RESEARCH SECTION
SUBSURFACE INFORMATION

BORING LOG

BENNINGTON
BRF 1000(16)S
TH-7 BR-57

Boring No.: **B-105**
Page No.: 1 of 1
Pin No.: 88J087
Checked By: NSM

Boring Crew: GARROW, SALISBURY
Date Started: 3/01/12 Date Finished: 3/08/12
VTSPG NAD83: N 144224.37 ft E 1452261.86 ft
Station: 9+84.93 Offset: 18.75
Ground Elevation: 630.61 ft

	Casing	Sampler
Type:	WB	SS
I.D.:	4 in	1.5 in
Hammer Wt:	N.A.	140 lb.
Hammer Fall:	N.A.	30 in.
Hammer/Rod Type:	Auto/AWJ	
Rig:	CME 45C TRACK	C_E = 1.34

Groundwater Observations		
Date	Depth (ft)	Notes
03/07/12	20.4	AM

BOTTOM OF ABUT. NO. 2 ELEV. = 622.25

APPROX. PILE TIP @ ABUT. NO. 2 ELEV. = 596.11

Depth (ft)	Strata (1)	CLASSIFICATION OF MATERIALS (Description)	Run (Dip deg.)	Core Rec.: % (RQD %)	Drill Rate minutes/ft	Blows/6" (N Value)	Moisture Content %	Gravel %	Sand %	Fines %
5		Lab Note, SaGr Mostly Broken Rock, brn, Moist, Rec. = 0.4 ft, NXDC 2.5'-3.0' Gravel.				4-5-20-20 (25)	8.1	69.3	22.3	8.4
		Lab Note, SaGr Mostly Broken Rock, brn, Moist, Rec. = 0.7 ft				8-23-18-18 (41)	11.0	68.3	23.7	8.0
		Field Note:, NXDC, Cobbles, Boulder								
10		Lab Note, Mostly Broken Rock, brn, Moist, Rec. = 0.3 ft, NXDC 8'-9' Gravel.				8-8-6-32 (14)	9.7	66.1	25.8	8.1
		A-1-a, SaGr, brn, Moist, Rec. = 0.6 ft				7-44-6-4 (50)	13.9	51.9	35.7	12.4
		Visual Classification, Broken Rock, brn, Moist, Rec. = 0.2 ft, Insufficient sample for testing.				6-3-2-2 (5)				
15		A-1-b, SiGrSa, brn, Moist, Rec. = 0.8 ft, NXDC 14.2'-15.0' Gravel.				2-2-1-2 (3)	17.0	37.5	38.7	23.8
		Field Note:, No Recovery.				6-5-5-5 (10)				
		A-1-b, SiGrSa, brn, Moist, Rec. = 0.9 ft, NXDC 18.2'-19.0' Gravel.				5-15-8-4 (23)	18.0	27.9	51.6	20.5
20		Visual Classification, SiGrSa, brn, Moist, Rec. = 0.1 ft				10-R@3.5"				
		Field Note:, NXDC, Cobbles								
		Lab Note, SaGr Mostly Broken Rock, brn, Moist, Rec. = 0.9 ft, NXDC 22'-23' Gravel.				16-41-36-41 (77)	9.7	69.9	20.6	9.5
		Lab Note, SaGr Mostly Broken Rock, brn, Moist, Rec. = 0.7 ft				10-9-9-4 (18)	10.8	70.4	26.5	3.1
25		Visual Classification, GrSa, red-brn, Moist, Insufficient sample for testing. NXDC 26.5'-27.0' Gravel.				8-2-1-3 (3)				
		A-1-b, SaSiGr with Broken Rock, brn, Moist, Rec. = 1.0 ft				12-18-40-R@5.0"	9.7	51.5	23.2	25.3
30		Field Note:, NXDC, 29'-32', Top of Incompetent Bedrock.								
		Field Note:, Sleaved casing to 3.0" and advanced with BXDC, 32'-34.5', Incompetent Bedrock.								
35		34.5 ft - 39.5 ft, Gray to light gray, Meta-Limestone, Moderately hard, Very slightly weathered, Poor rock, BWG, Closely spaced jointing. Very poor RQD. RMR = 39	1 (10)	90 (14)	6 4 3 3 3	Top of Bedrock @ 34.5 ft				
40		39.5 ft - 44.5 ft, Light gray, Meta-Limestone, Moderately hard, Very slightly weathered, Poor rock, BWG, Closely spaced jointing. Very poor RQD. RMR = 39	2 (10)	90 (8)	3 3 3 3 3					
45		Hole stopped @ 44.5 ft								

Notes:
1. Stratification lines represent approximate boundary between material types. Transition may be gradual.
2. N Values have not been corrected for hammer energy. C_E is the hammer energy correction factor.
3. Water level readings have been made at times and under conditions stated. Fluctuations of groundwater may occur due to other factors than those present at the time measurements were made.

BORING LOG 2 BENNINGTON BRF 1000(16)S.GPJ VERMONT AOT.GDT 5/2/12

PROJECT NAME: BENNINGTON
PROJECT NUMBER: BRF 1000(16)

FILE NAME: z88j087bdr_Blogs.dgn
PROJECT LEADER: R. HEBERT
DESIGNED BY: D. MYERS
BORING LOGS 3

PLOT DATE: 8/7/2014
DRAWN BY: S. MORGAN
CHECKED BY: R. HEBERT
SHEET 32 OF 75

STATE OF VERMONT
AGENCY OF TRANSPORTATION
MATERIALS & RESEARCH SECTION
SUBSURFACE INFORMATION

BORING LOG

BENNINGTON
BRF 1000(16)S
TH-7 BR-57

Boring No.: **B-106**
Page No.: 1 of 1
Pin No.: 88J087
Checked By: NSM

Boring Crew: GARROW, SALISBURY
Date Started: 3/08/12 Date Finished: 3/20/12
VTSPG NAD83: N 144245.32 ft E 1452208.57 ft
Station: 10+25 Offset: -26.77
Ground Elevation: 630.3 ft

	Casing	Sampler
Type:	WB	SS
I.D.:	4 in	1.5 in
Hammer Wt:	N.A.	140 lb.
Hammer Fall:	N.A.	30 in.
Hammer/Rod Type:	Auto/AWJ	
Rig:	CME 45C TRACK	C_E = 1.34

Groundwater Observations

Date	Depth (ft)	Notes
03/20/12	21.9	AM

Depth (ft)	Strata (1)	CLASSIFICATION OF MATERIALS (Description)	Run (Dip deg.)	Core Rec. % (RQD %)	Drill Rate minutes/ft.	Blows/6" (N Value)	Moisture Content %	Gravel %	Sand %	Fines %
		Field Class:, SiGr								
		Field Class:, Cobbles								
5		Field Class:, Sa								
		Field Class:, Cobbles, Lost water at 5.0 ft.								
		Field Class:, Gr NXDC								
BOTTOM OF ABUT. NO. 2 ELEV. = 622.25										
10		Field Class:, GrSa NXDC, Old ground at 15.0 ft.								
15		Field Class:, Gr NXDC								
		Field Class:, NXDC, Cobbles								
		Field Class:, Gr NXDC								
20		Field Class:, NXDC, Cobbles								
		Field Class:, Gr								
		Field Class:, Cobbles								
		Field Class:, Gr								
25		Field Note:, Badly fractured rock. Unable to core., Competent rock at 29.0 ft.								
APPROX. PILE TIP @ ABUT. NO. 2 ELEV. = 601.30										
30		29.0 ft - 34.0 ft, Gray to light gray, Meta-Limestone, Moderately hard, Very slightly weathered, Fair rock, NXMDC, Closely spaced jointing. RMR = 44	1 (10)	100 (26)	5 6 4 3 4	Top of Bedrock @ 29.0 ft				
35		34.0 ft - 39.0 ft, Light gray, Meta-Limestone, Moderately hard, Very slightly weathered, Fair rock, NXMDC, Closely spaced jointing. RMR = 49	2 (10)	86 (70)	4 4 5 6 8					
40		Hole stopped @ 39.0 ft								
45										

Notes:
1. Stratification lines represent approximate boundary between material types. Transition may be gradual.
2. N Values have not been corrected for hammer energy. C_E is the hammer energy correction factor.
3. Water level readings have been made at times and under conditions stated. Fluctuations of groundwater may occur due to other factors than those present at the time measurements were made.

BORING LOG 2 BENNINGTON BRF 1000(16)S.GPJ VERMONT AOT.GDT 4/4/12

PROJECT NAME: BENNINGTON
PROJECT NUMBER: BRF 1000(16)

FILE NAME: z88J087bdr_Blogs.dgn
PROJECT LEADER: R. HEBERT
DESIGNED BY: D. MYERS
BORING LOGS 4

PLOT DATE: 8/7/2014
DRAWN BY: S. MORGAN
CHECKED BY: R. HEBERT
SHEET 33 OF 75

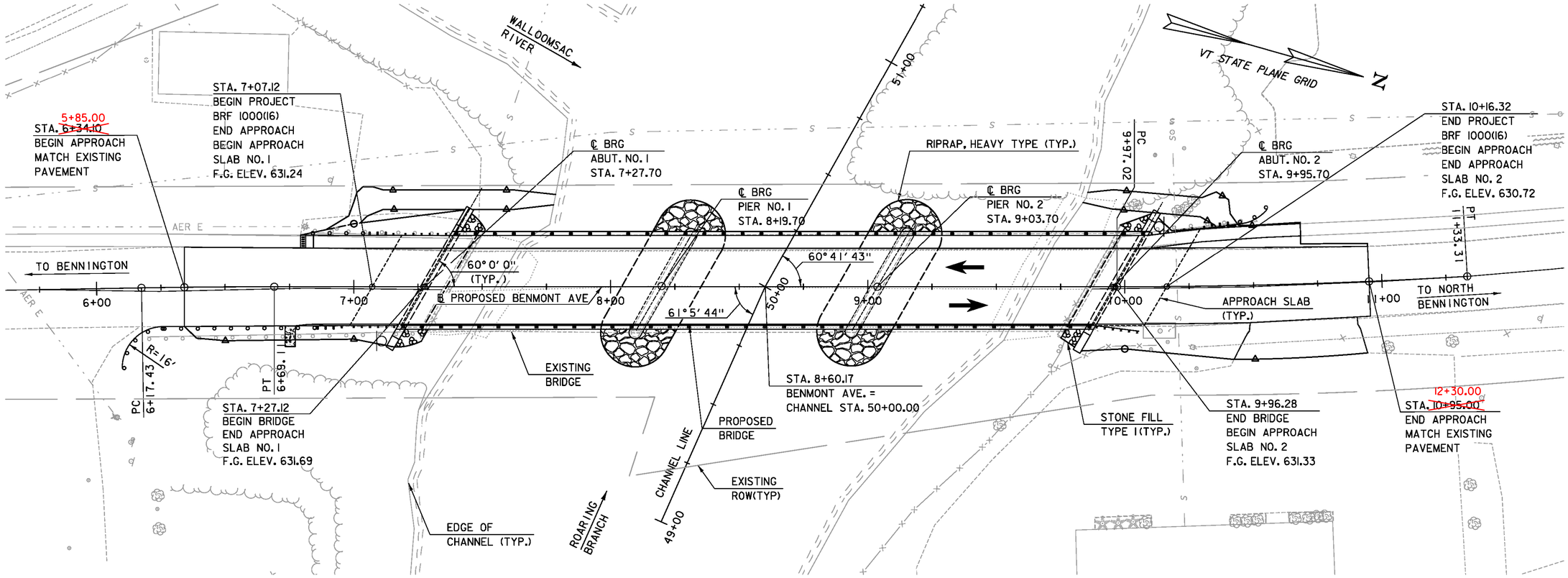

PLAN

SCALE 1" = 20'-0"

20 0 20

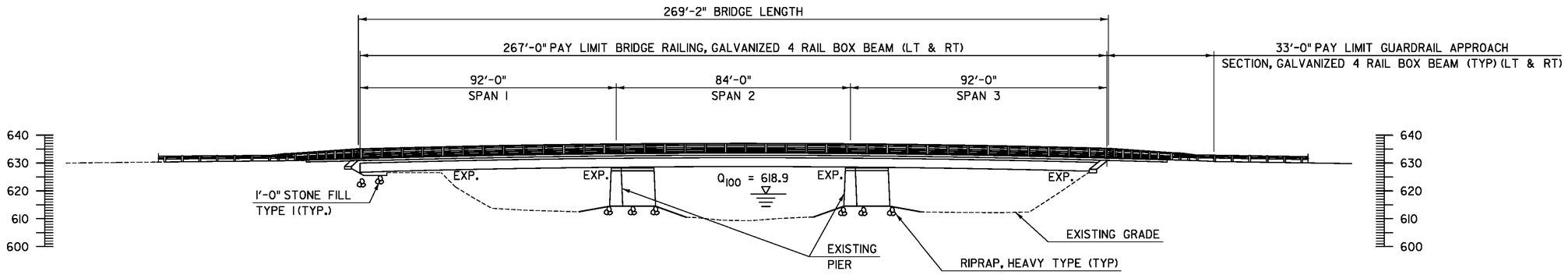

ELEVATION

SCALE 1" = 20'-0"

20 0 20

PROJECT NAME:	BENNINGTON
PROJECT NUMBER:	BRF 1000(16)
FILE NAME: z881087bdr_gpe.dgn	PLOT DATE: 8/7/2014
PROJECT LEADER: R. HEBERT	DRAWN BY: D. AXTEL
DESIGNED BY: D. MYERS	CHECKED BY: R.HEBERT
GENERAL PLAN AND ELEVATION	SHEET 34 OF 75

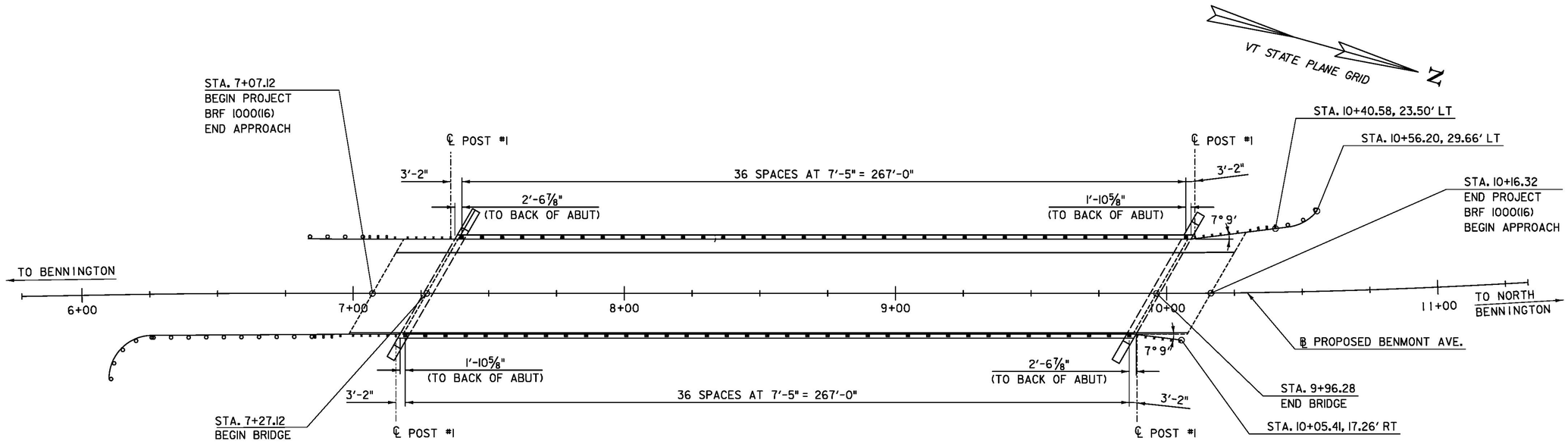

RAIL LAYOUT

SCALE 1" = 20'-0"

NOTES:

1. ALL RAIL LAYOUT DIMENSIONS ARE HORIZONTAL ALONG THE FACE OF RAIL.
2. SEE RAILING DETAIL SHEETS AND LAYOUT PLAN SHEET FOR ADDITIONAL DETAILS AND APPROACH RAILING LAYOUT.

PROJECT NAME:	BENNINGTON
PROJECT NUMBER:	BRF 1000(16)
FILE NAME: z881087bdr_raillay.dgn	PLOT DATE: 8/7/2014
PROJECT LEADER: R. HEBERT	DRAWN BY: J. OLUND
DESIGNED BY: D. MYERS	CHECKED BY: R.HEBERT
RAIL LAYOUT SHEET	SHEET 35 OF 75

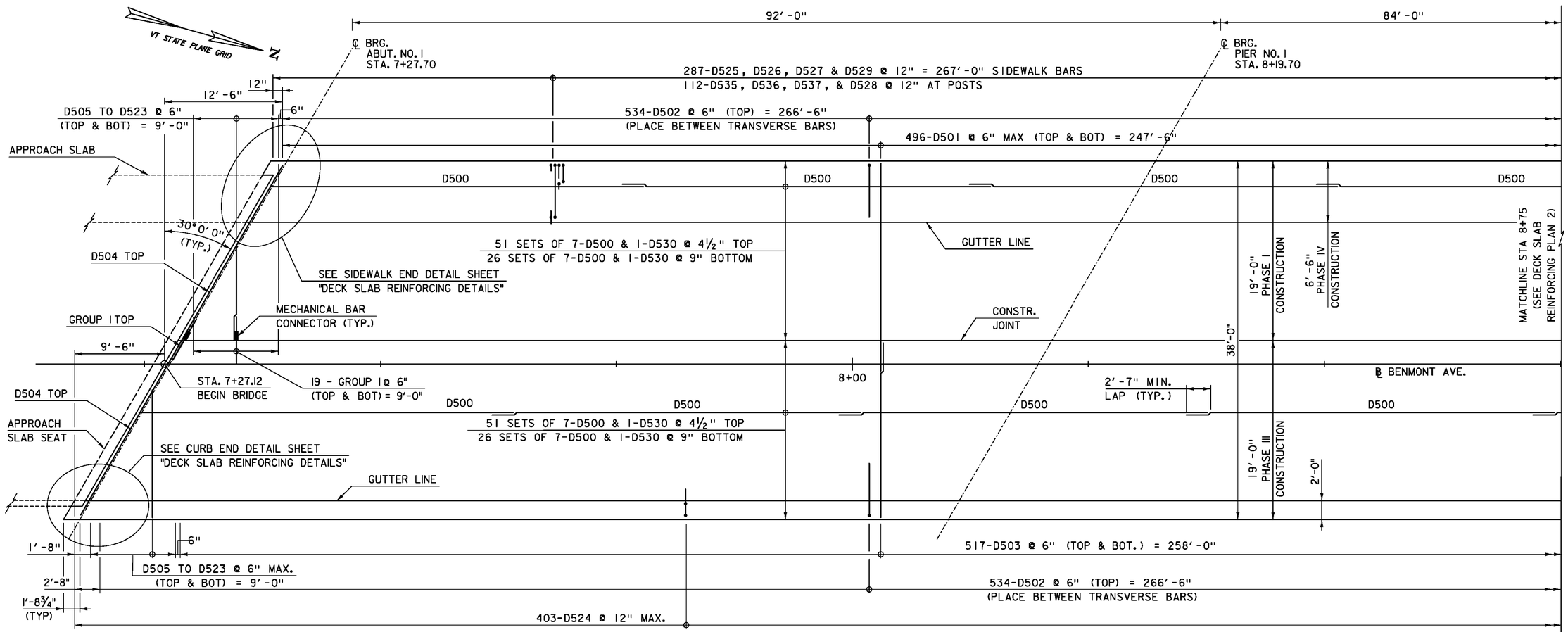

DECK REINFORCEMENT PLAN

SCALE 3/16" = 1′-0"

GROUP I:
D538, D539, &
MECHANICAL
BAR CONNECTOR

FOR ADDITIONAL SIDEWALK AND CURB REINFORCEMENT,
SEE SHEET "DECK SLAB REINFORCING DETAILS"

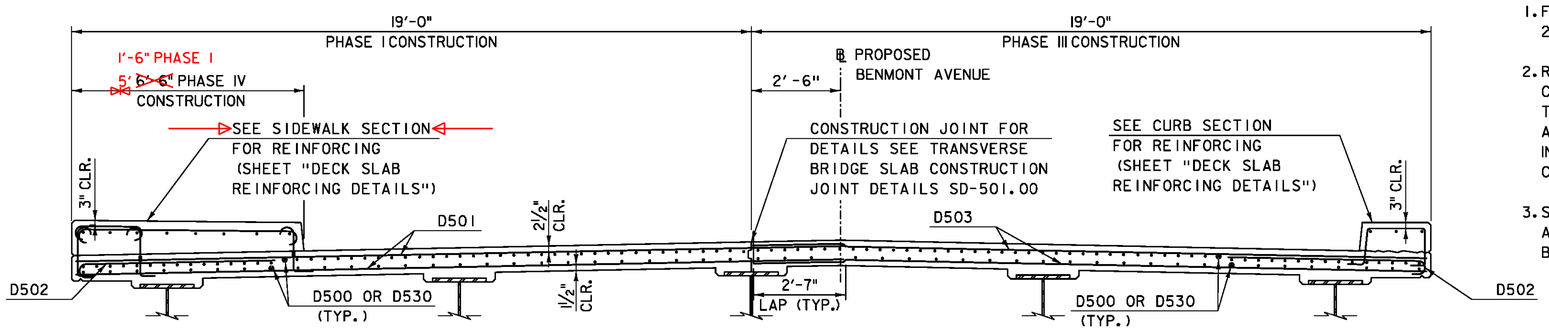

DECK SECTION

SCALE ½" = 1′-0"

NOTES:

1. FOR ADDITIONAL DECK DETAILS, SEE SHEETS "DECK SLAB REINFORCING PLAN 2" AND "DECK SLAB REINFORCING DETAILS".
2. REMOVABLE PROTECTIVE INSERTS SHALL BE INSTALLED IN MECHANICAL BAR CONNECTORS THROUGH THE DURATION OF PHASE III CONSTRUCTION TO KEEP THE COUPLERS FREE AND CLEAR OF DEBRIS UNTIL THE SIDEWALK DOWELS ARE INSTALLED DURING PHASE IV CONSTRUCTION. PAYMENT FOR PROTECTIVE INSERTS SHALL BE INCIDENTAL TO ITEM 507.19, "MECHANICAL BAR CONNECTOR."
3. SEE ABUTMENT NO. 1 REINFORCING, ABUTMENT NO. 2 REINFORCING, AND ABUTMENT SECTIONS SHEETS FOR ADDITIONAL REINFORCING NOT SHOWN AT BRIDGE ENDS.

PROJECT NAME:	BENNINGTON
PROJECT NUMBER:	BRF 1000(16)
FILE NAME: z88J087bdr_deckpln1.dgn	PLOT DATE: 8/7/2014
PROJECT LEADER: R. HEBERT	DRAWN BY: S. MORGAN
DESIGNED BY: D. MYERS	CHECKED BY: R. HEBERT
DECK SLAB REINFORCING PLAN 1	SHEET 36 OF 75

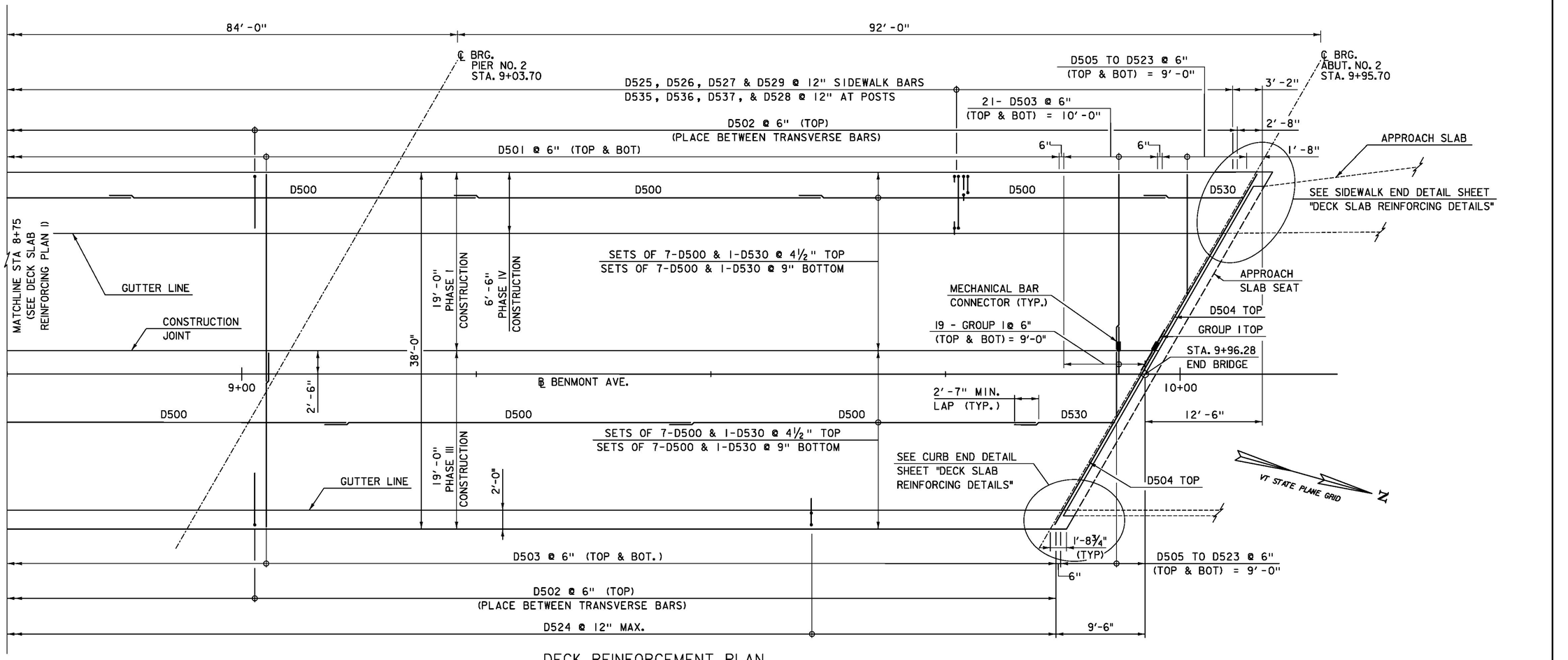

DECK REINFORCEMENT PLAN

SCALE 3/16" = 1'-0"

FOR ADDITIONAL SIDEWALK AND CURB REINFORCEMENT,
SEE SHEET "DECK SLAB REINFORCING DETAILS"

GROUP I:
D538, D539, &
MECHANICAL
BAR CONNECTOR

NOTE: SEE "DECK SLAB REINFORCING PLAN I"
FOR NOTES AND DECK SECTION.

PROJECT NAME:	BENNINGTON
PROJECT NUMBER:	BRF 1000(16)
FILE NAME: z88J087bdr_deckpln2.dgn	PLOT DATE: 8/7/2014
PROJECT LEADER: R. HEBERT	DRAWN BY: S. MORGAN
DESIGNED BY: D. MYERS	CHECKED BY: R. HEBERT
DECK SLAB REINFORCING PLAN 2	SHEET 37 OF 75

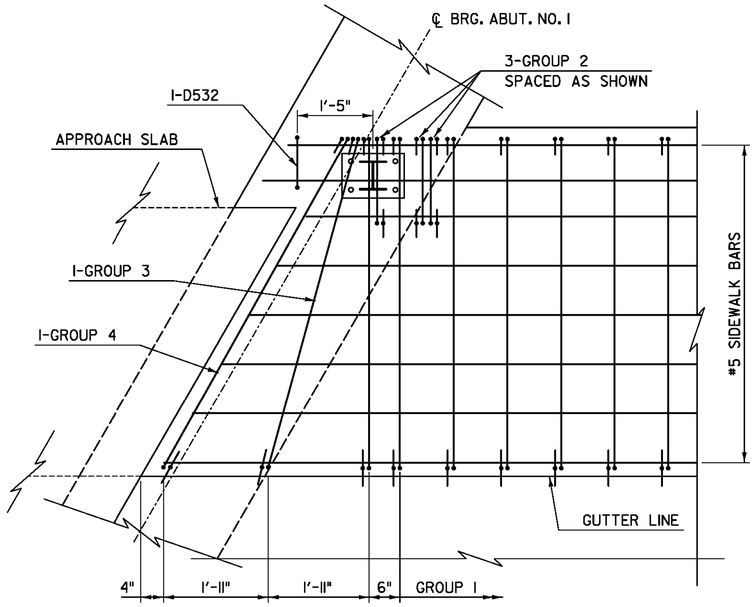

SIDEWALK END DETAIL ABUTMENT 1

DECK AND ABUTMENT BARS NOT SHOWN FOR CLARITY

SCALE 3/4" = 1'-0"

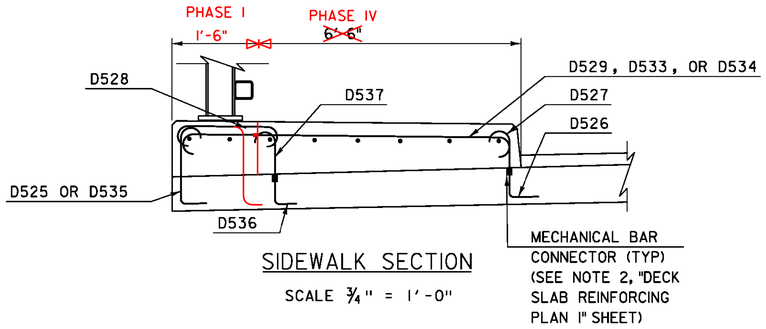

SIDEWALK SECTION

SCALE 3/4" = 1'-0"

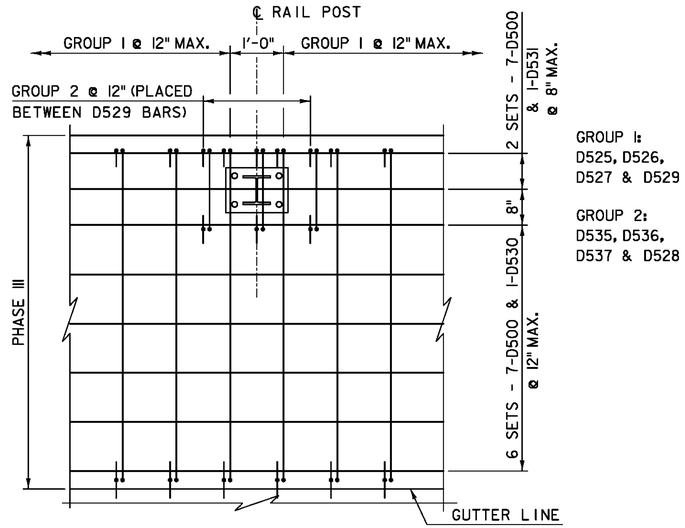

SIDEWALK REINFORCEMENT PLAN

SCALE 3/4" = 1'-0"

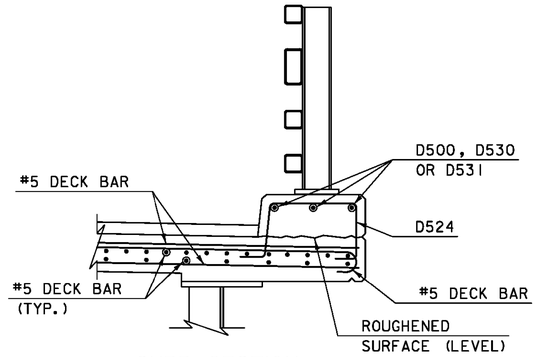

CURB SECTION

SCALE 3/4" = 1'-0"

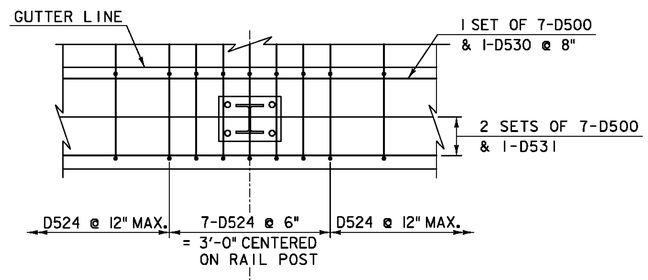

CURB REINFORCEMENT PLAN

SCALE 3/4" = 1'-0"

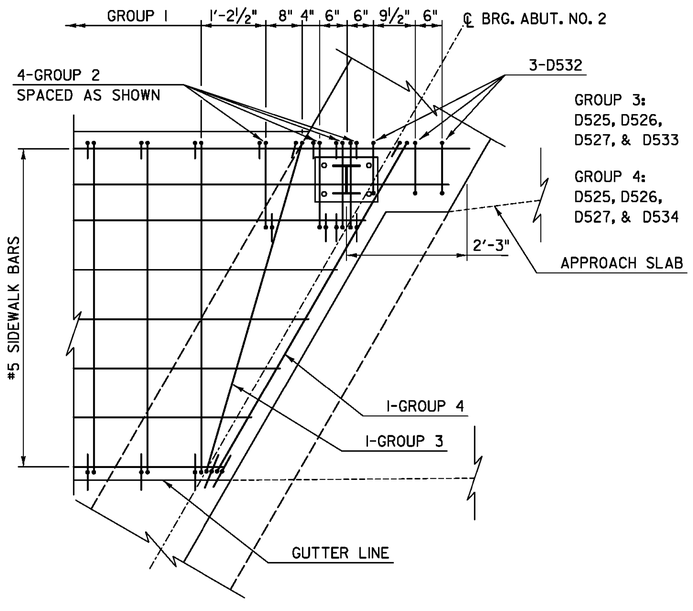

SIDEWALK END DETAIL ABUTMENT 2

DECK AND ABUTMENT BARS NOT SHOWN FOR CLARITY

SCALE 3/4" = 1'-0"

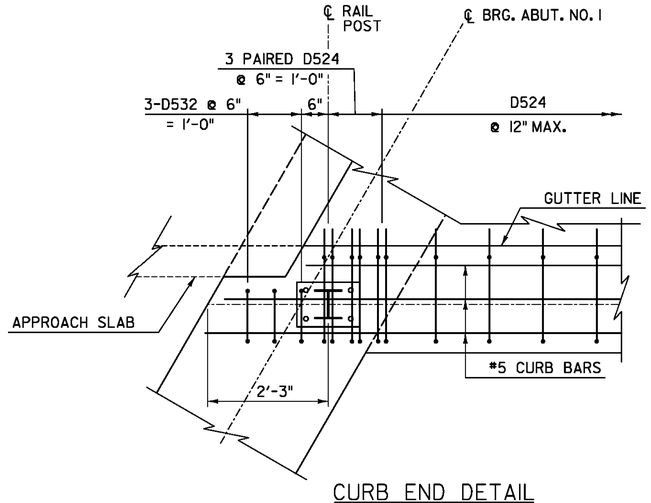

CURB END DETAIL

DECK AND ABUTMENT BARS NOT SHOWN FOR CLARITY

DETAIL AT ABUTMENT NO. 1 SHOWN, DETAIL AT ABUTMENT NO. 2 SIMILAR

SCALE 3/4" = 1'-0"

PROJECT NAME:	BENNINGTON
PROJECT NUMBER:	BRF 1000(16)
FILE NAME: z88J087bdr_deckdets.dgn	PLOT DATE: 8/7/2014
PROJECT LEADER: R. HEBERT	DRAWN BY: J. TATE
DESIGNED BY: D. MYERS	CHECKED BY: R. HEBERT
DECK SLAB REINFORCING DETAILS	SHEET 38 OF 75

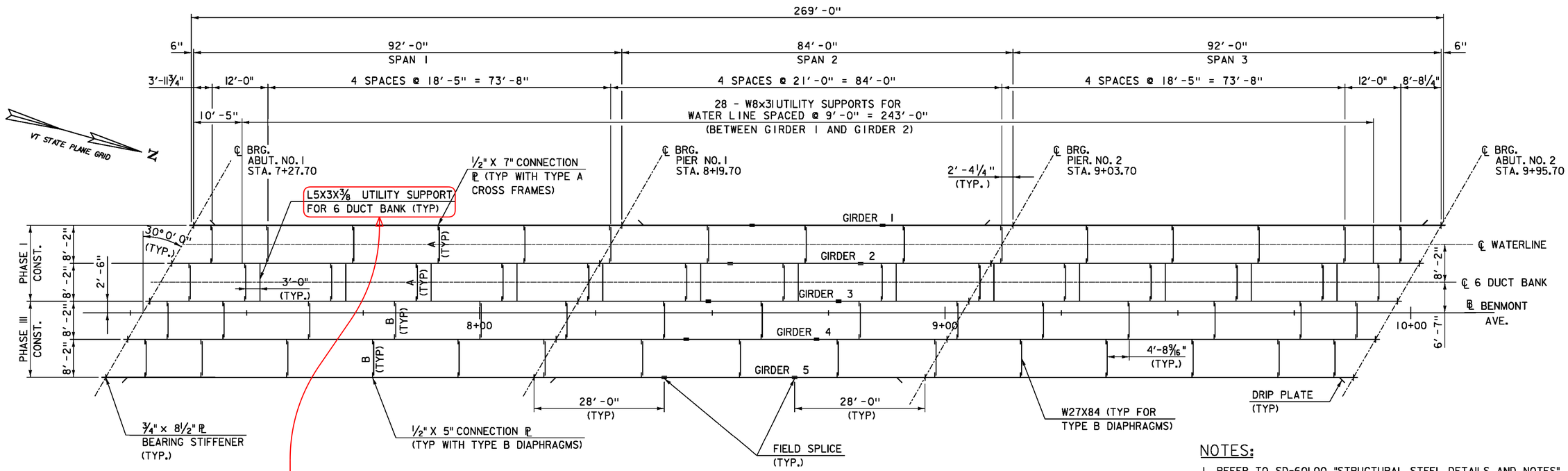

FRAMING PLAN

SCALE 1" = 1'-0"

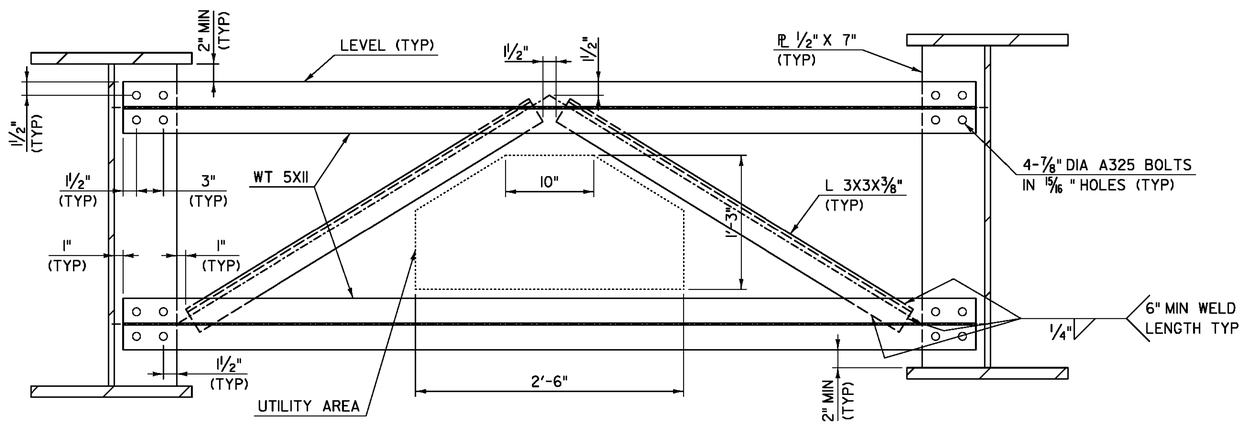

TYPE A CROSS FRAME

SCALE ½" = 1'-0"

NOTES:

1. REFER TO SD-601.00 "STRUCTURAL STEEL DETAILS AND NOTES" FOR DRIP PLATE DETAIL.
2. REFER TO SD-602.00 "STRUCTURAL STEEL PLATE GIRDER DETAILS AND NOTES" FOR TYPE B DIAPHRAGM DETAILS.
3. CONNECTION PLATES FOR TYPE B DIAPHRAGMS BETWEEN GIRDER 3 AND GIRDER 4 SHALL HAVE OVERSIZED BOLT HOLES. BOLTS FOR THAT DIAPHRAGM SHALL NOT BE TIGHTENED UNTIL AFTER PHASE III DECK CONCRETE HAS BEEN POURED. ALL BOLTS AND NUTS SHALL BE ADEQUATELY AND UNIFORMLY LUBRICATED PRIOR TO FINAL TIGHTENING. BOLTS AND NUTS NOT PROPERLY LUBRICATED SHALL BE CLEANED AND RELUBRICATED OR SHALL BE REMOVED AND REPLACED WITH NEW BOLTS AND NUTS AS DIRECTED BY THE ENGINEER. COST OF RELUBRICATION OR REPLACEMENT OF BOLTS AND NUTS SHALL BE AT THE CONTRACTOR'S EXPENSE.
4. REFER TO SHEETS "WATERLINE ALIGNMENT" AND "WATERLINE DETAILS" FOR LOCATION AND SUPPORT DETAILS FOR THE WATER LINE.
5. REFER TO SHEETS "UTILITY DUCT BANK DETAILS" & "UTILITY PLAN SHEET" FOR LOCATION AND SUPPORT DETAILS FOR THE UTILITY DUCT BANK.

PROJECT NAME:	BENNINGTON
PROJECT NUMBER:	BRF 1000(16)
FILE NAME: z881087bdr_frame.dgn	PLOT DATE: 8/7/2014
PROJECT LEADER: R. HEBERT	DRAWN BY: S. MORGAN
DESIGNED BY: D. MYERS	CHECKED BY: R. HEBERT
FRAMING PLAN AND CROSS FRAME DETAILS	SHEET 39 OF 75

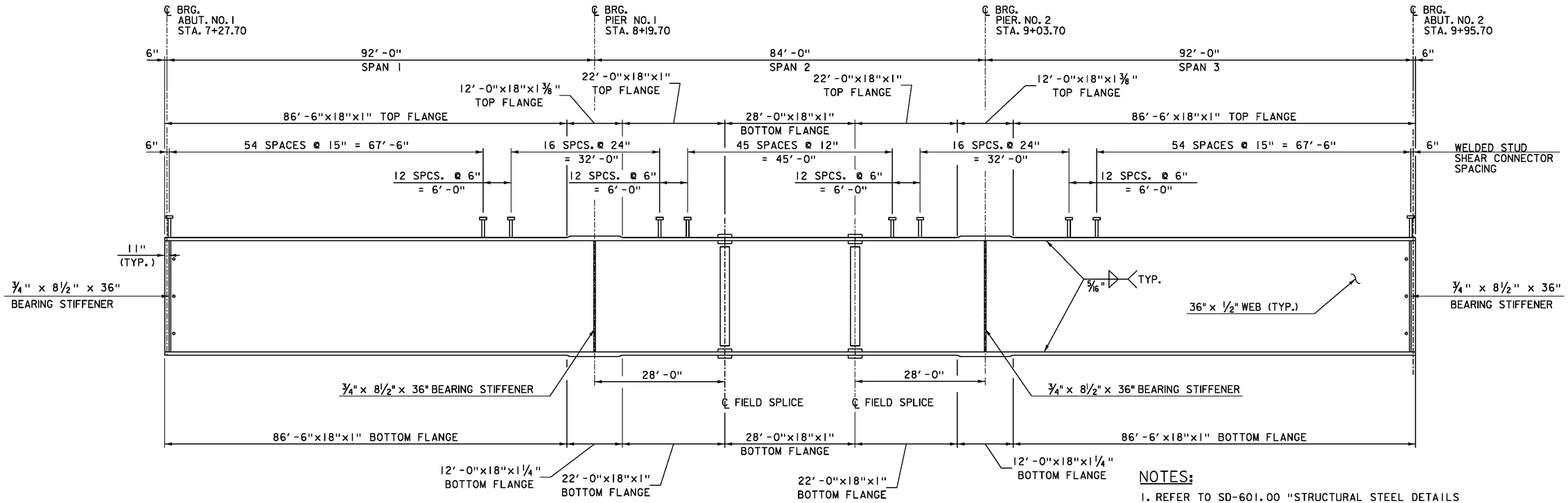

GIRDER ELEVATION

NOT TO SCALE

NOTES:

1. REFER TO SD-601.00 "STRUCTURAL STEEL DETAILS AND NOTES" AND SD-602.00 "STRUCTURAL STEEL PLATE GIRDER DETAILS AND NOTES" FOR ADDITIONAL STRUCTURAL STEEL PLATE GIRDER DETAILS AND NOTES.

2. SEE STRUCTURAL STEEL NOTE 36 ON PROJECT NOTES SHEET FOR PLATES TO BE CHARPY V-NOTCH TESTED.

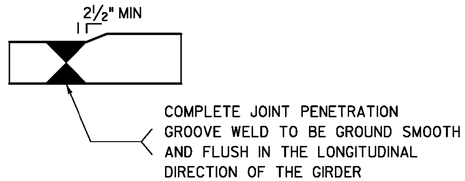

FLANGE TRANSITION BUTT WELD

NOT TO SCALE

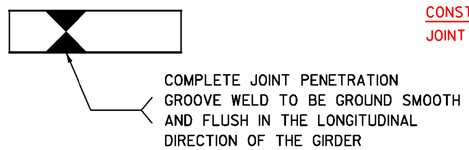

FLANGE OR WEB BUTT WELD

NOT TO SCALE

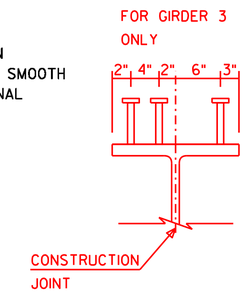

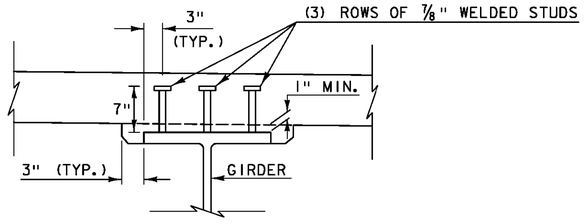

HAUNCH AND SHEAR CONNECTOR DETAIL

(NOT TO SCALE)

NOTE: STUDS SHALL PROJECT A MINIMUM OF 2" ABOVE THE BOTTOM OF THE SLAB. SHEAR CONNECTORS SHALL NOT BE WELDED TO FIELD SPLICE PLATES. SHEAR CONNECTORS DETAILED OVER FIELD SPLICE PLATES SHALL BE RELOCATED ADJACENT TO THE FIELD SPLICE PLATES. PROVIDE A MINIMUM OF 4" BETWEEN ADJACENT SHEAR CONNECTORS AND/OR SHEAR CONNECTORS AND FIELD SPLICE PLATES.

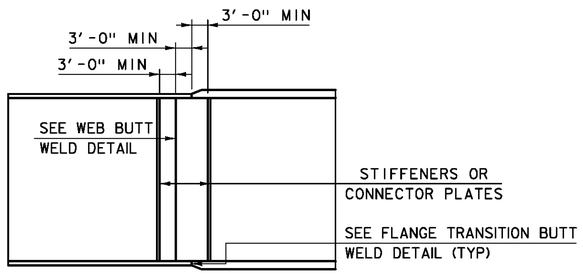

WELDED SPLICE TRANSITION

NOT TO SCALE

PROJECT NAME:	BENNINGTON
PROJECT NUMBER:	BRF 1000(16)

FILE NAME: z881087bdr_girder.dgn	PLOT DATE: 8/29/2014
PROJECT LEADER: R. HEBERT	DRAWN BY: S. MORGAN
DESIGNED BY: D. MYERS	CHECKED BY: R. HEBERT
GIRDER ELEVATION	SHEET 40 OF 75

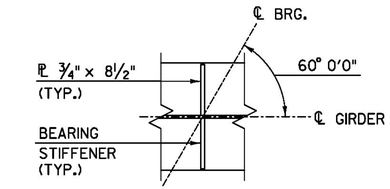

BEARING STIFFENER PLAN AT PIER

SCALE 1" = 1'-0"

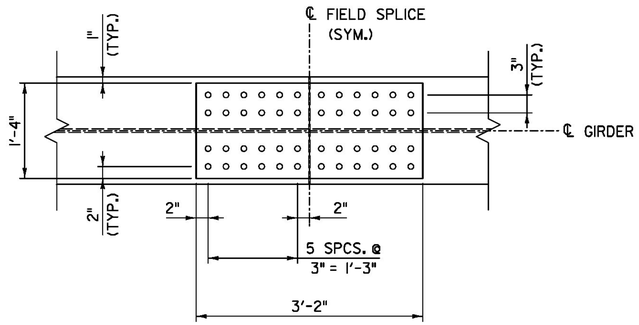

OUTER FLANGE SPLICE PLAN

SCALE 1" = 1'-0"

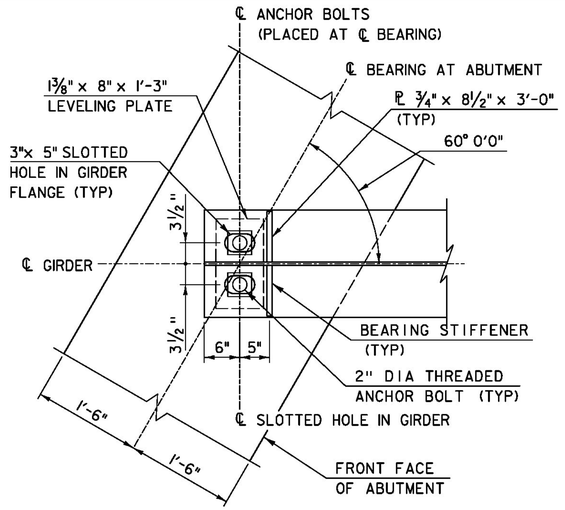

PLAN OF END OF GIRDER

SCALE 1" = 1'-0"

BRIDGE SEAT ELEVATION		
GIRDER	ABUTMENT 1	ABUTMENT 2
G1	627.21	626.26
G2	627.25	626.57
G3	627.30	626.87
G4	627.12	626.95
G5	626.85	626.92

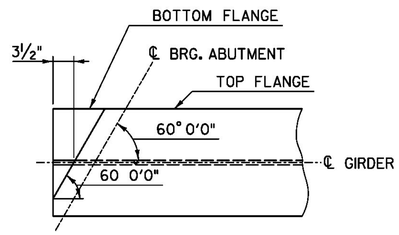

TOP FLANGE CLIP PLAN
AT ABUTMENTS

SCALE 1" = 1'-0"

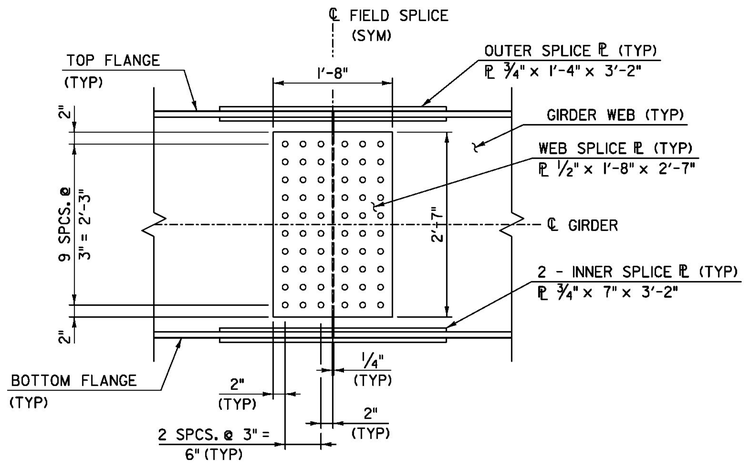

WEB SPLICE ELEVATION

SCALE 1" = 1'-0"

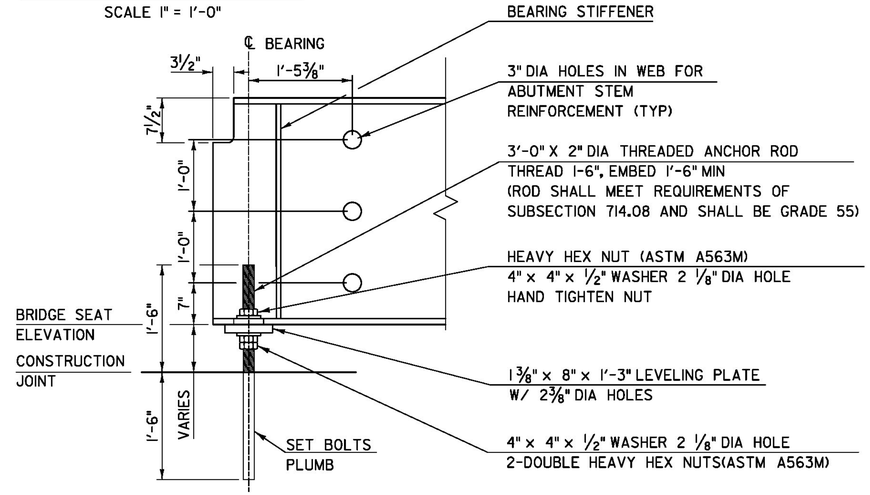

ELEVATION VIEW END OF GIRDER AT ABUTMENT

SCALE 1" = 1'-0"

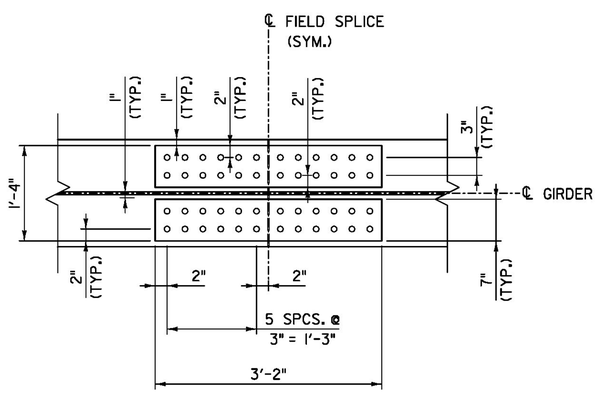

INNER FLANGE SPLICE PLAN

SCALE 1" = 1'-0"

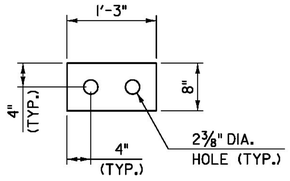

LEVELING PLATE DETAIL

SCALE 1" = 1'-0"

ABUTMENT BEARING ASSEMBLY NOTES:

1. ALL COMPONENTS OF ABUTMENT BEARING ASSEMBLY, INCLUDING ANCHOR BOLTS, NUTS, WASHERS, AND LEVELING PLATES, SHALL BE PAID FOR UNDER ITEM 506.55 "STRUCTURAL STEEL, PLATE GIRDER".
2. COMPONENTS DO NOT HAVE TO BE GALVANIZED OR METALIZED.
3. SEE SUBSECTION 531.05(a) FOR INSTALLATION OF ANCHOR BOLTS.

PROJECT NAME: BENNINGTON
PROJECT NUMBER: BRF 1000(16)

FILE NAME: z888087bdr_ssdets.dgn
PROJECT LEADER: R. HEBERT
DESIGNED BY: D. MYERS
GIRDER DETAILS

PLOT DATE: 8/7/2014
DRAWN BY: S. MORGAN
CHECKED BY: R. HEBERT
SHEET 41 OF 75

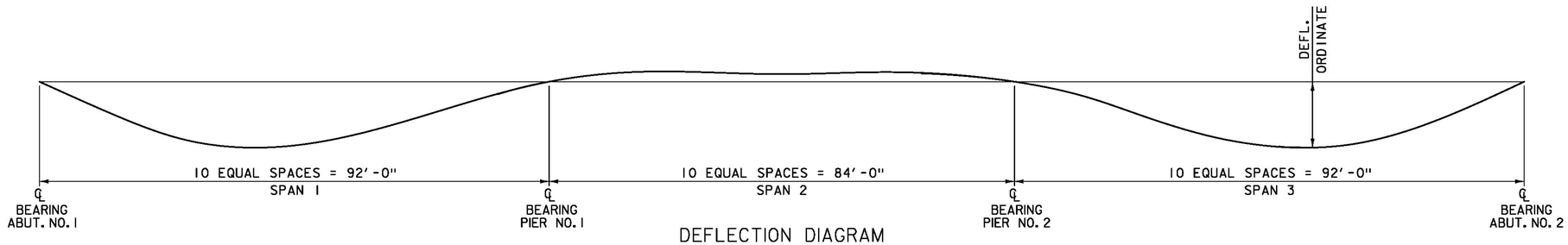

DEFLECTION DIAGRAM

NTS- SEE TABLE BELOW

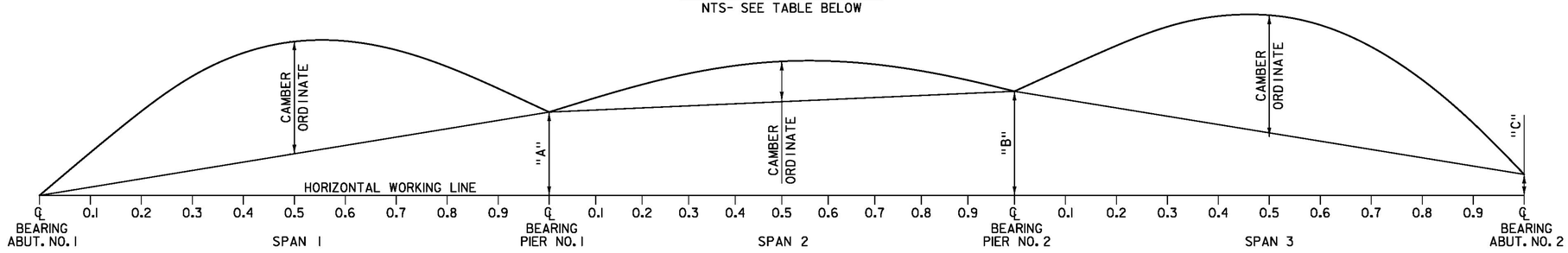

CAMBER DIAGRAM

NTS- SEE TABLE BELOW

GIRDER	DIMENSION "A"	DIMENSION "B"	DIMENSION "C"
1	16 5/8"	13 1/16"	-11 3/8"
2	17 3/4"	15 1/8"	-8 5/16"
3	18 3/4"	17 3/16"	-5 3/16"
4	19 11/16"	19 1/8"	-2 1/8"
5	20 1/2"	20 15/16"	13/16"

CAMBER TABLE

GIRDER	LOCATION	SPAN 1										SPAN 2										SPAN 3									
		0.00	0.10	0.20	0.30	0.40	0.50	0.60	0.70	0.80	0.90	0.00	0.10	0.20	0.30	0.40	0.50	0.60	0.70	0.80	0.90	0.00	0.10	0.20	0.30	0.40	0.50	0.60	0.70	0.80	0.90	1.00
1 - 5	STEEL DL DEFLECTION	0	-3/16	-5/16	-3/8	-7/16	-7/16	-7/16	-5/16	-3/16	-1/16	0	1/16	1/16	1/16	1/16	1/16	1/16	1/16	1/16	1/16	0	-1/16	-3/16	-5/16	-7/16	-7/16	-7/16	-7/16	-5/16	-3/16	0
	SLAB & SUPER DL DEFLECTION	0	-7/8	-1 5/8	-2 3/16	-2 1/2	-2 1/2	-2 3/16	-1 3/4	-1 1/8	-1/2	0	1/4	5/16	5/16	1/4	1/4	1/4	5/16	5/16	1/4	0	-1/2	-1 1/8	-1 3/4	-2 3/16	-2 1/2	-2 1/2	-2 3/16	-1 5/8	-7/8	0
	TOTAL DL DEFLECTION	0	-1 1/16	-1 15/16	-2 5/8	-2 15/16	-2 15/16	-2 5/8	-2 1/16	-1 5/16	-9/16	0	5/16	3/8	3/8	5/16	5/16	5/16	3/8	3/8	5/16	0	-9/16	-1 5/16	-2 1/16	-2 5/8	-2 15/16	-2 15/16	-2 5/8	-1 15/16	-1 1/16	0
	RESIDUAL CAMBER	0	13/16	1 9/16	2 1/8	2 7/16	2 9/16	2 1/2	2 3/16	1 11/16	15/16	0	13/16	1 7/16	1 7/8	2 1/8	2 1/4	2 3/16	1 7/8	1 7/16	13/16	0	15/16	1 3/4	2 1/4	2 9/16	2 11/16	2 9/16	2 1/4	1 11/16	15/16	0
	REQUIRED TOTAL CAMBER	0	1 7/8	3 1/2	4 11/16	5 3/8	5 1/2	5 1/8	4 1/4	3	1 1/2	0	9/16	1 1/16	1 1/2	1 13/16	1 15/16	1 13/16	1 1/2	1 1/16	1/2	0	1 9/16	3 1/16	4 5/16	5 3/16	5 5/8	5 1/2	4 7/8	3 5/8	2	0

NOTES:

1. ALL DIMENSIONS ARE IN INCHES
2. NEGATIVE DEFLECTIONS ARE DOWNWARD

PROJECT NAME: BENNINGTON
PROJECT NUMBER: BRF 1000(16)

FILE NAME: z881087bdr_camber.dgn
PROJECT LEADER: R. HEBERT
DESIGNED BY: D. MYERS
CAMBER DIAGRAM/DEAD LOAD DEFLECTIONS

PLOT DATE: 8/7/2014
DRAWN BY: J. TATE
CHECKED BY: R. HEBERT
SHEET 42 OF 75

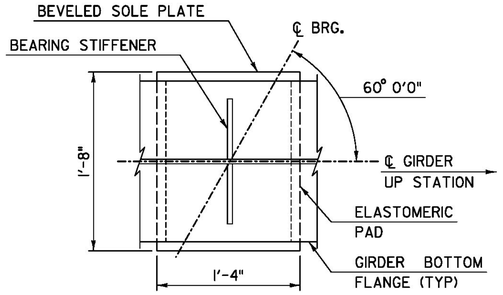

PLAN
(BRG. TYPE A)
SCALE 1½" = 1'-0"

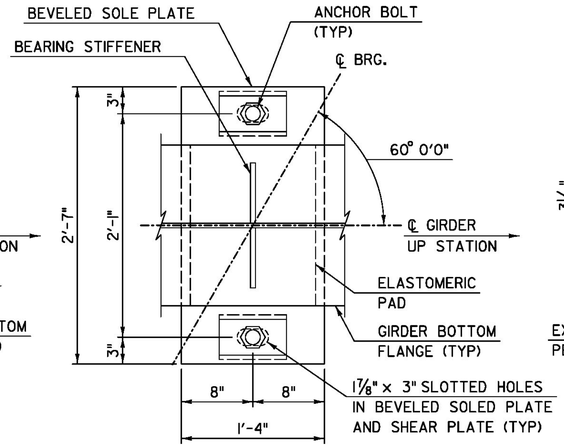

PLAN
(BRG. TYPE B)
SCALE 1½" = 1'-0"

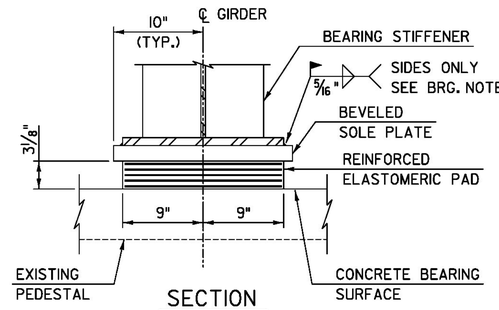

SECTION
(BRG. TYPE A)
SCALE 1½" = 1'-0"

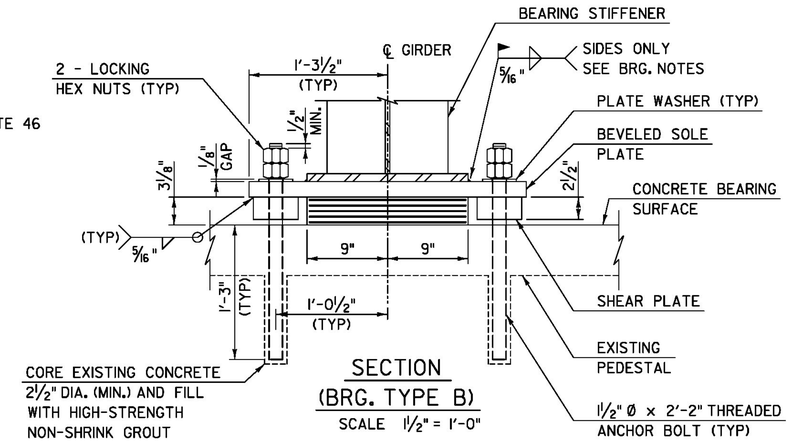

SECTION
(BRG. TYPE B)
SCALE 1½" = 1'-0"

NOTE: THREADED ANCHOR BOLT SHALL BE GRADE 50 OR HIGHER AND MUST BE A449, F1554 OR F568M, CLASS 3.8, THREADED 8", EMBEDED 1'-3" MIN.

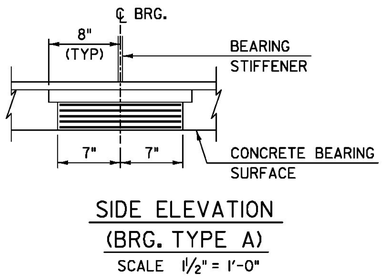

SIDE ELEVATION
(BRG. TYPE A)
SCALE 1½" = 1'-0"

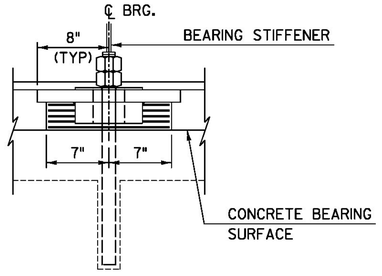

SIDE ELEVATION
(BRG. TYPE B)
SCALE 1½" = 1'-0"

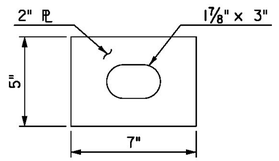

SLOTTED SHEAR PLATE
(BRG. TYPE B)
SCALE 3 " = 1'-0"

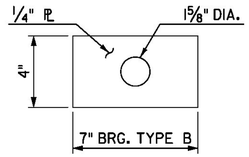

PLATE WASHER
(BRG. TYPE B)
SCALE 3 " = 1'-0"

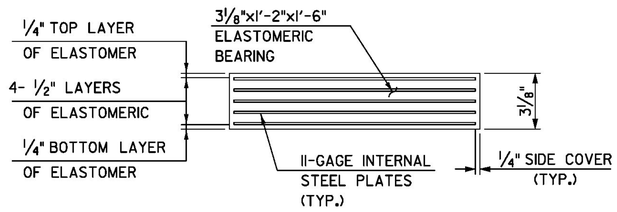

REINFORCED ELASTOMERIC PAD
SCALE 3 " = 1'-0"

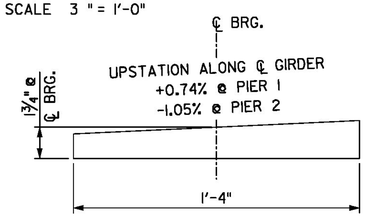

1'-4" X 1'-8" ℙ BEARING TYPE A
1'-4" X 2'-7" ℙ BEARING TYPE B

SOLE PLATE
SCALE 3 " = 1'-0"

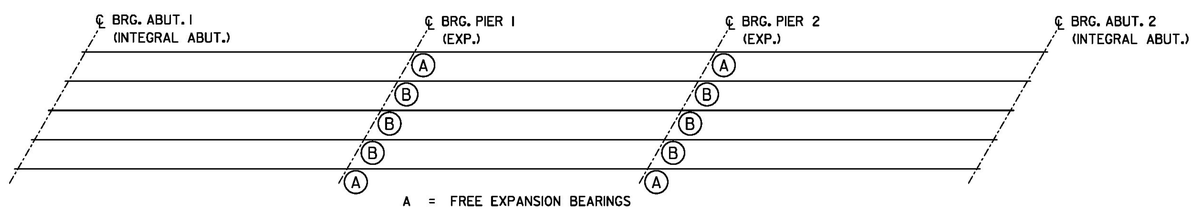

A = FREE EXPANSION BEARINGS
B = SLOTTED EXPANSION BEARINGS

BEARING LAYOUT
NOT TO SCALE

NOTE:
ALL STEEL COMPONENTS OF BEARING DEVICE ASSEMBLY, EXCEPT INTERNAL STEEL PLATES, SHALL BE GALVANIZED.

PROJECT NAME:	BENNINGTON
PROJECT NUMBER:	BRF 1000(16)
FILE NAME: z88J087bdr_brgdets.dgn	PLOT DATE: 8/8/2014
PROJECT LEADER: R. HEBERT	DRAWN BY: S. MORGAN
DESIGNED BY: D. MYERS	CHECKED BY: R. HEBERT
BEARING DEVICE DETAILS	SHEET 43 OF 75

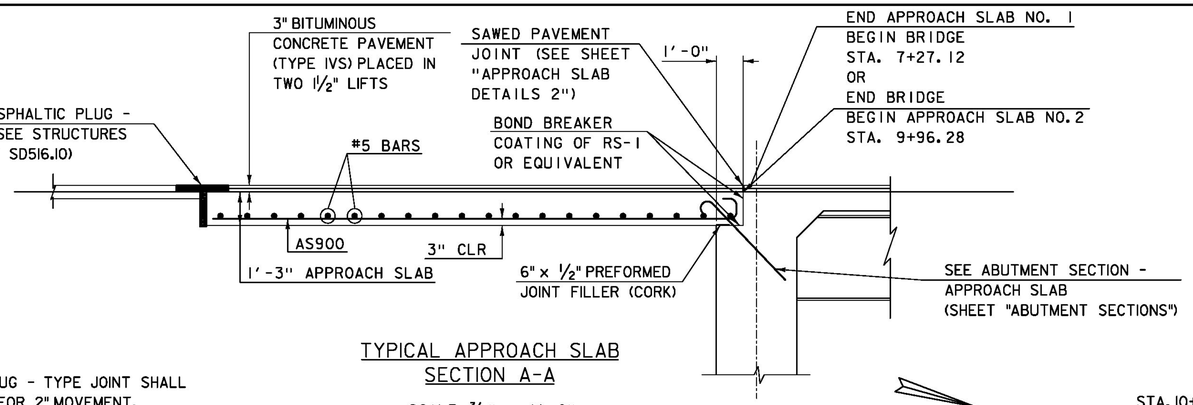

NOTE:
ASPHALTIC PLUG - TYPE JOINT SHALL BE DESIGNED FOR 2" MOVEMENT.

TYPICAL APPROACH SLAB SECTION A-A

SCALE ⅜" = 1'-0"

NOTES:

1. ALL ELEVATIONS AT TOP OF APPROACH SLAB, SIDEWALK OR CURB SURFACE.
2. SEE APPROACH SLAB DETAILS 2 SHEET FOR SECTION B-B DETAIL.

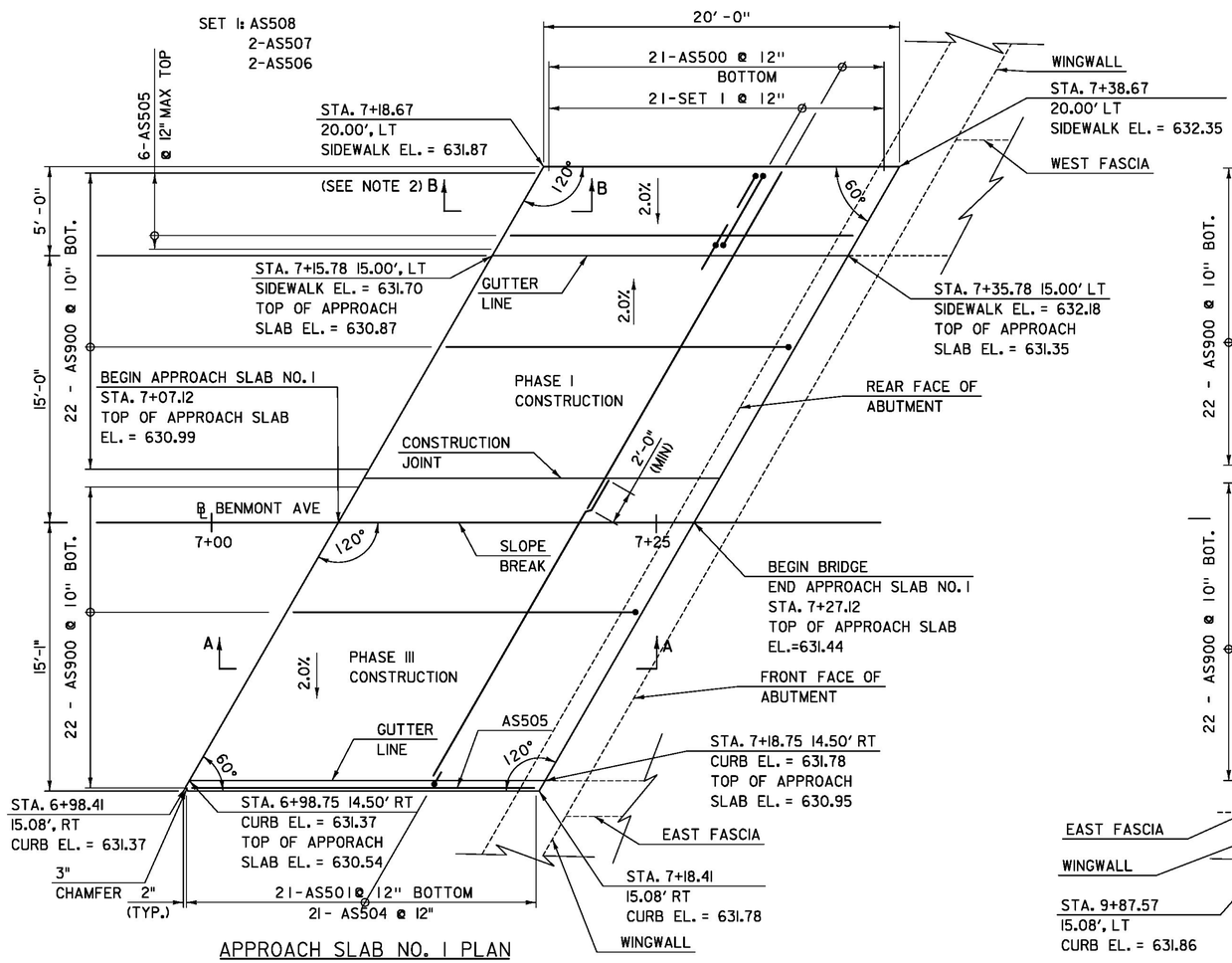

APPROACH SLAB NO. 1 PLAN

SCALE ¼" = 1'-0"

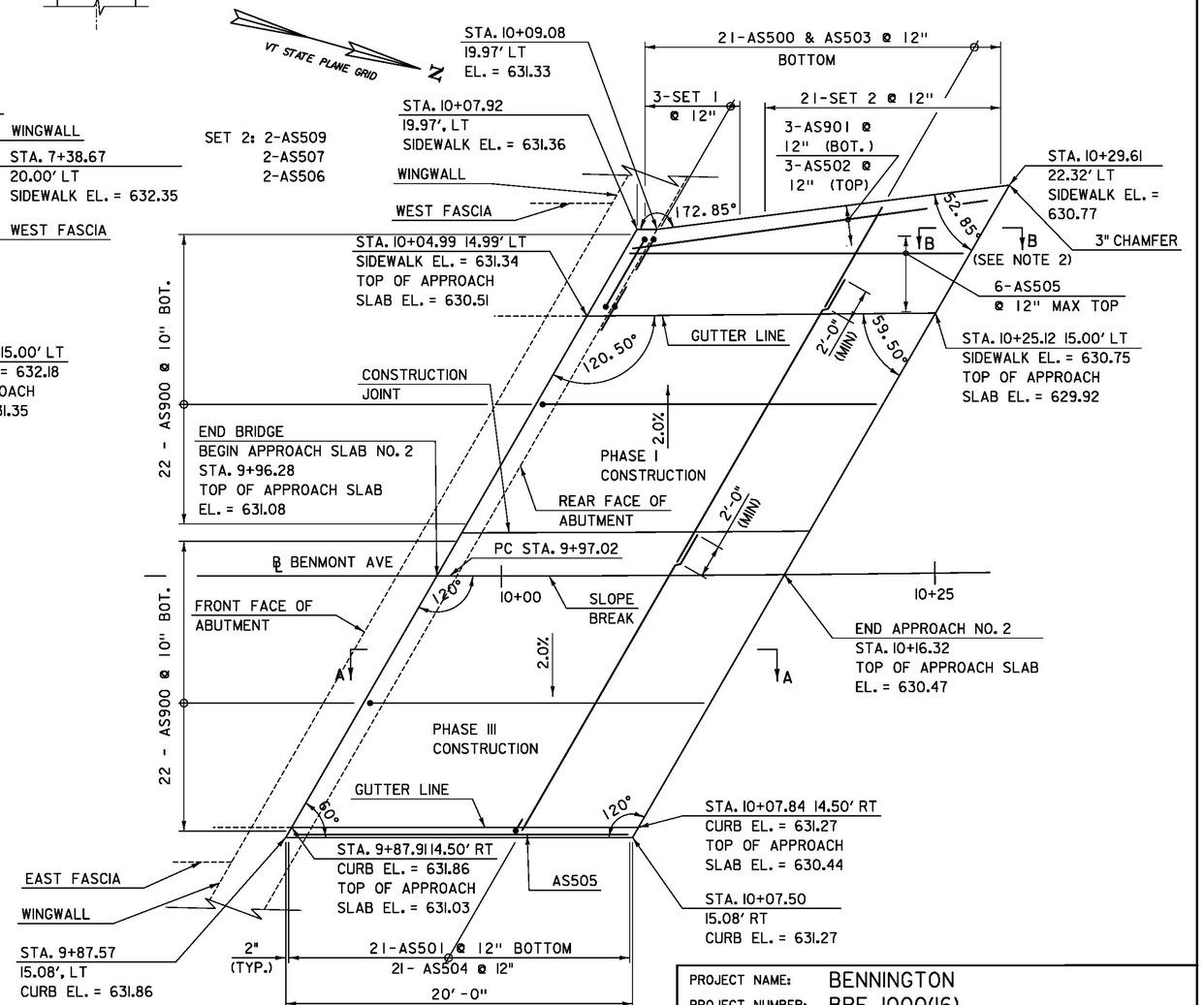

APPROACH SLAB NO. 2 PLAN

SCALE ¼" = 1'-0"

PROJECT NAME:	BENNINGTON
PROJECT NUMBER:	BRF 1000(16)
FILE NAME: z881087bdr_apprslab.dgn	PLOT DATE: 8/8/2014
PROJECT LEADER: R. HEBERT	DRAWN BY: D. AXTELL
DESIGNED BY: D. MYERS	CHECKED BY: R. HEBERT
APPROACH SLAB DETAILS 1	SHEET 44 OF 75

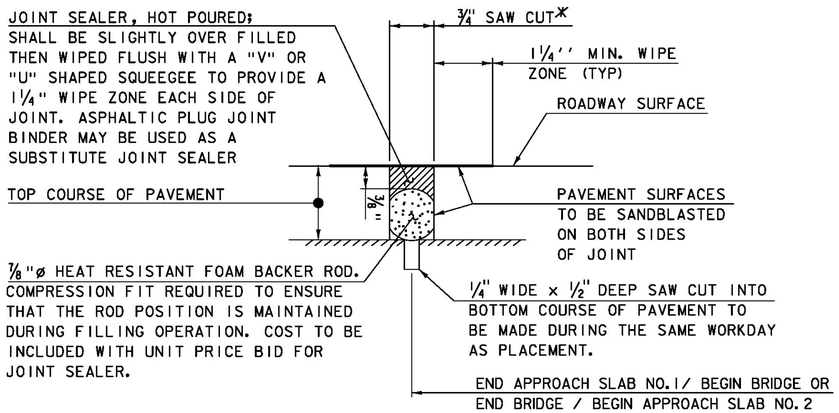

ITEM 524.11, "JOINT SEALER, HOT POURED"
SAWED PAVEMENT JOINT DETAIL
(NOT TO SCALE)

*JOINT IS TO BE LOCATED ACCURATELY BY STRING LINING, OR OTHER MEANS, PRIOR TO PAVING, SO THAT THE SAW CUTS WILL BE MADE DIRECTLY OVER THE END OF CONCRETE DECK. JOINT SHALL BE CUT DRY IN A SINGLE PASS AND BE SEALED WITHIN 24 HOURS OR PRIOR TO EXPOSURE TO TRAFFIC. JOINT SHALL BE CLEANED PRIOR TO APPLYING THE JOINT SEALER.

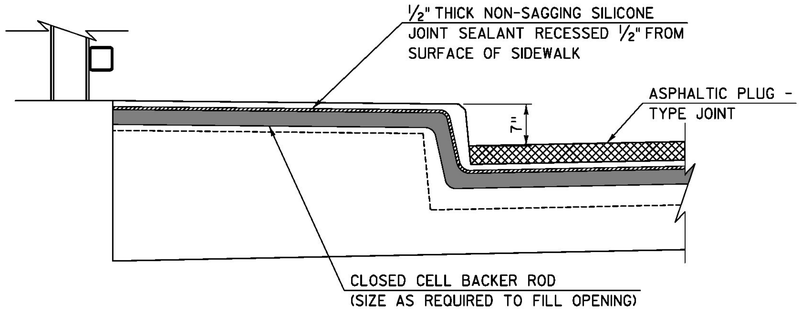

JOINT ELEVATION AT SECTION B-B
SCALE 1" = 1'-0"
(SIDEWALK SIDE SHOWN, CURB SIDE SIMILAR)

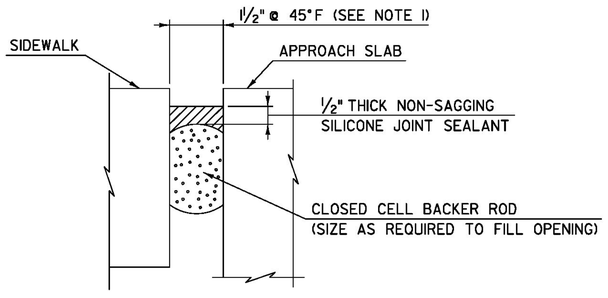

SIDEWALK JOINT SECTION B-B
SCALE 6" = 1'-0"
(SIDEWALK SIDE SHOWN, CURB SIDE SIMILAR)

NOTES:

1. +/- 0.12" PER 10°F CHANGE.
2. LOCATION OF SECTION B-B IS SHOWN ON SHEET "APPROACH SLAB DETAILS 1".
3. MATERIALS AND WORK ASSOCIATED WITH SIDEWALK AND CURB JOINT SHALL BE INCIDENTAL TO ITEM 516.10, "BRIDGE EXPANSION JOINT, ASPHALTIC PLUG".

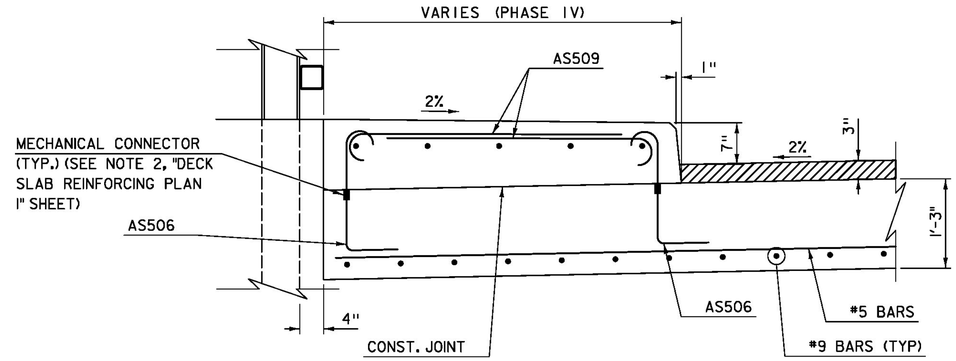

APPROACH SLAB-SIDEWALK SECTION, ABUTMENT 2
SCALE 1" = 1'-0"

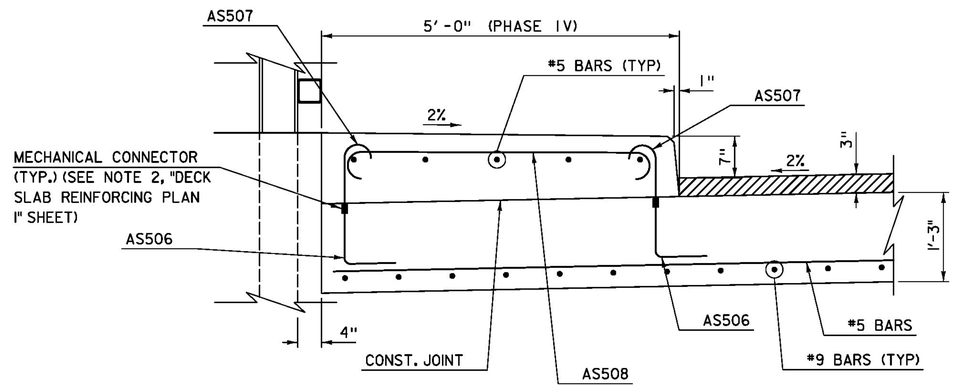

APPROACH SLAB-SIDEWALK SECTION, ABUTMENT 1
SCALE 1" = 1'-0"

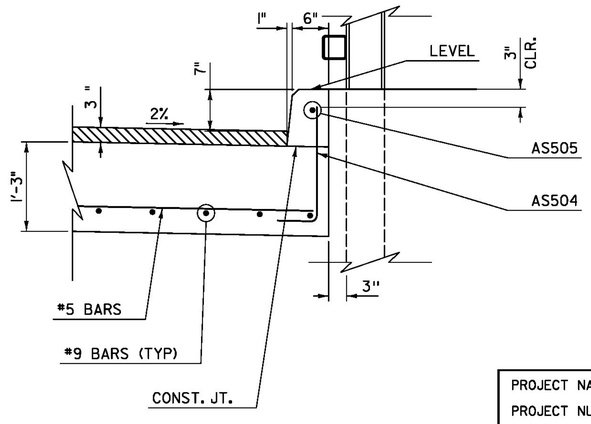

APPROACH SLAB-CURB SECTION
SCALE 1" = 1'-0"

PROJECT NAME:	BENNINGTON
PROJECT NUMBER:	BRF 1000(16)
FILE NAME: z888087bdr_apprslab2.dgn	PLOT DATE: 8/7/2014
PROJECT LEADER: R. HEBERT	DRAWN BY: D. AXTELL
DESIGNED BY: D. MYERS	CHECKED BY: R. HEBERT
APPROACH SLAB DETAILS 2	SHEET 45 OF 75

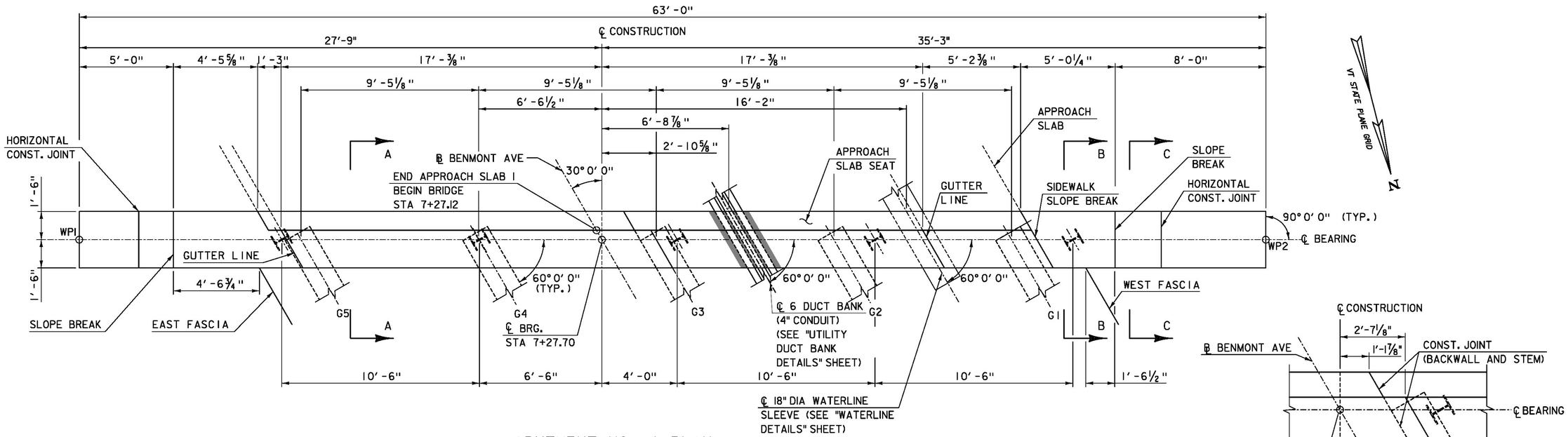

ABUTMENT NO. 1 PLAN

SCALE ⅜" = 1'-0"

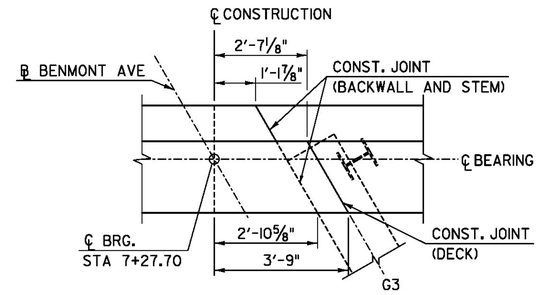

ABUTMENT NO. 1
CONST. JOINT PLAN

SCALE: ½" = 1'-0"

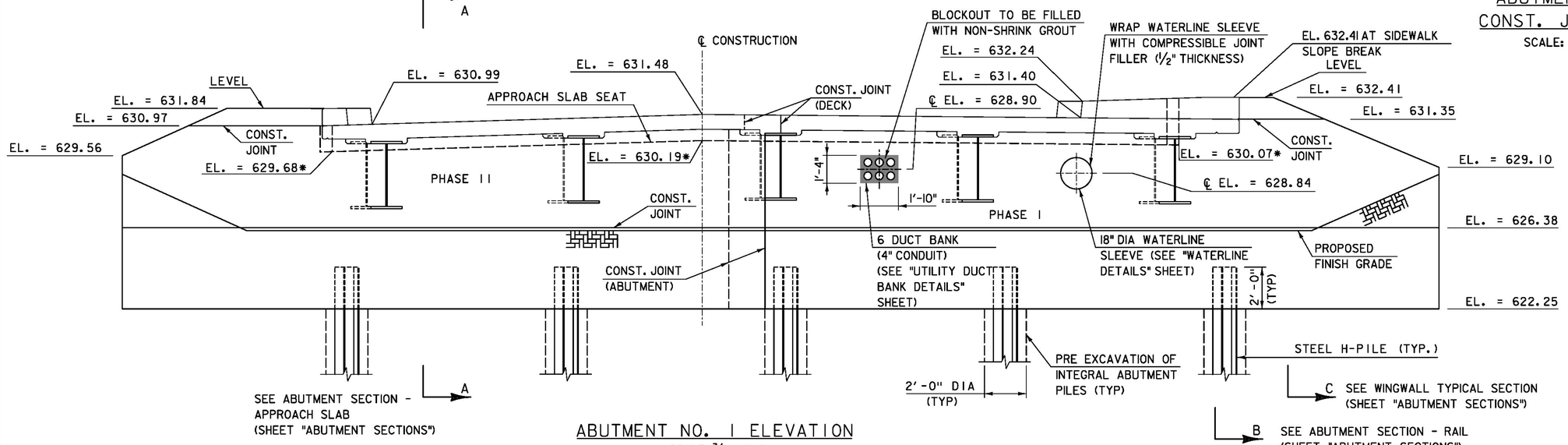

ABUTMENT NO. 1 ELEVATION

SCALE ⅜" = 1'-0"

NOTE: ELEVATIONS AT FRONT FACE OF ABUTMENT UNLESS OTHERWISE NOTED.

* ELEVATIONS AT CORNER OF APPROACH SLAB SEAT.

PROJECT NAME:	BENNINGTON
PROJECT NUMBER:	BRF 1000(16)
FILE NAME: z88J087bdr_abut1.dgn	PLOT DATE: 8/8/2014
PROJECT LEADER: R. HEBERT	DRAWN BY: J. TATE
DESIGNED BY: D. MYERS	CHECKED BY: R. HEBERT
ABUTMENT NO.1 - PLAN & ELEVATION	SHEET 46 OF 75

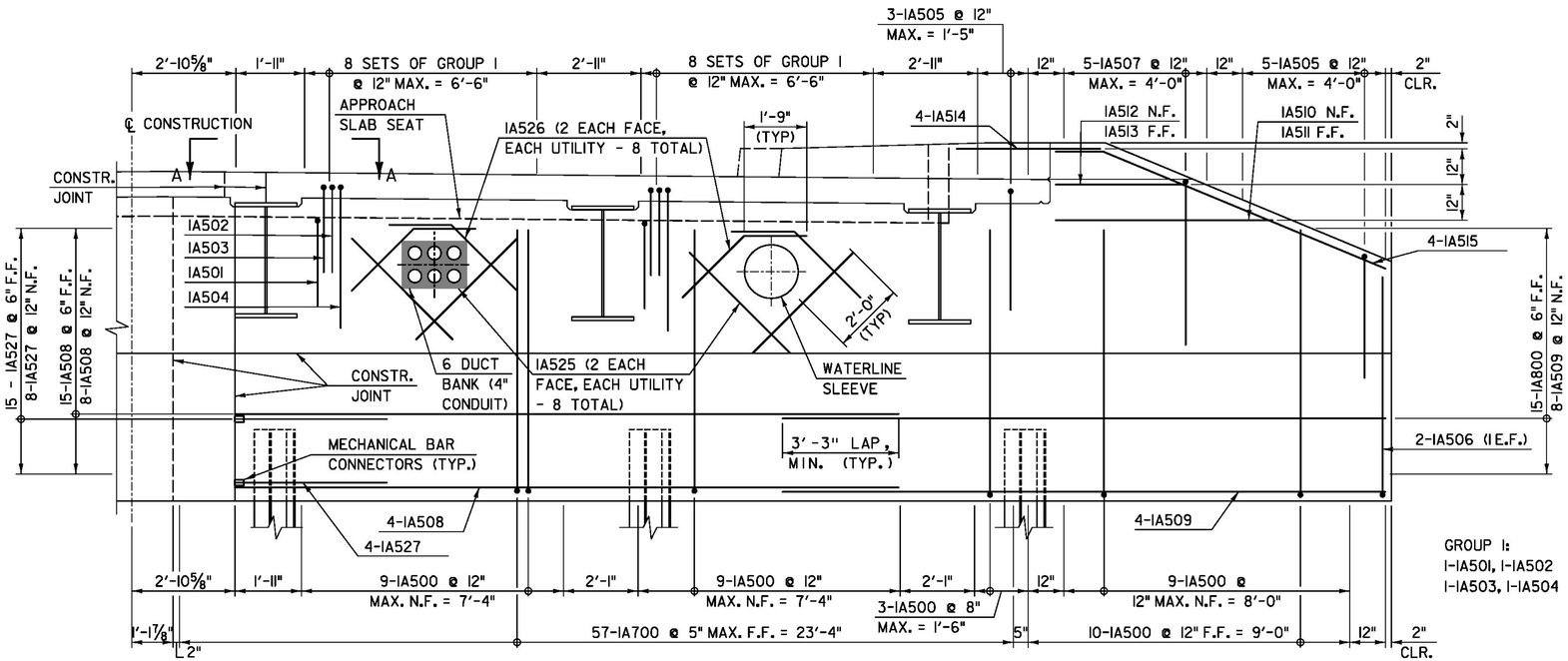

ABUTMENT NO. 1 REINFORCING - PHASE I

NOT TO SCALE

(DECK AND SIDEWALK STEEL NOT SHOWN FOR CLARITY)

NOTE:

1. ADJUST BAR SPACING AS REQUIRED TO AVOID ABUTMENT UTILITY PENETRATIONS. TRANSVERSE BARS MAY BE CUT AS NECESSARY.

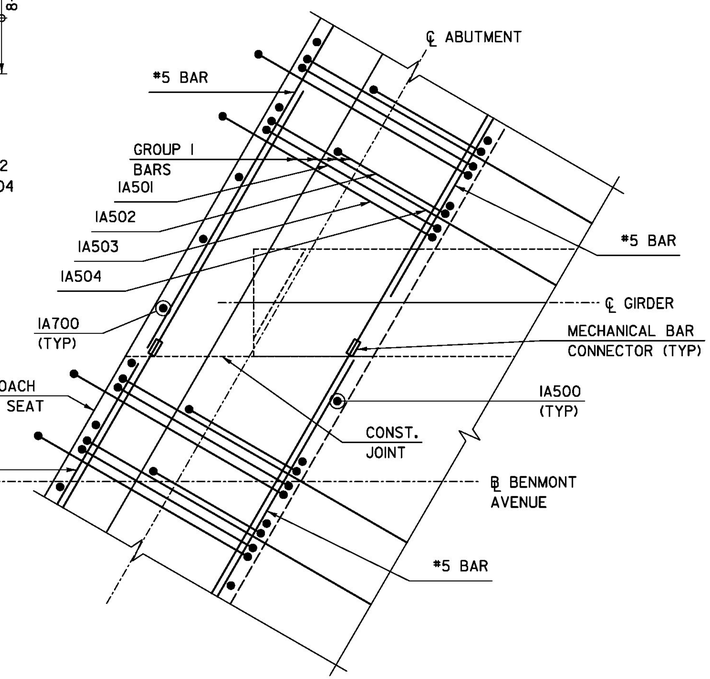

VIEW A-A

NOT TO SCALE

(DECK REINFORCEMENT NOT SHOWN FOR CLARITY)

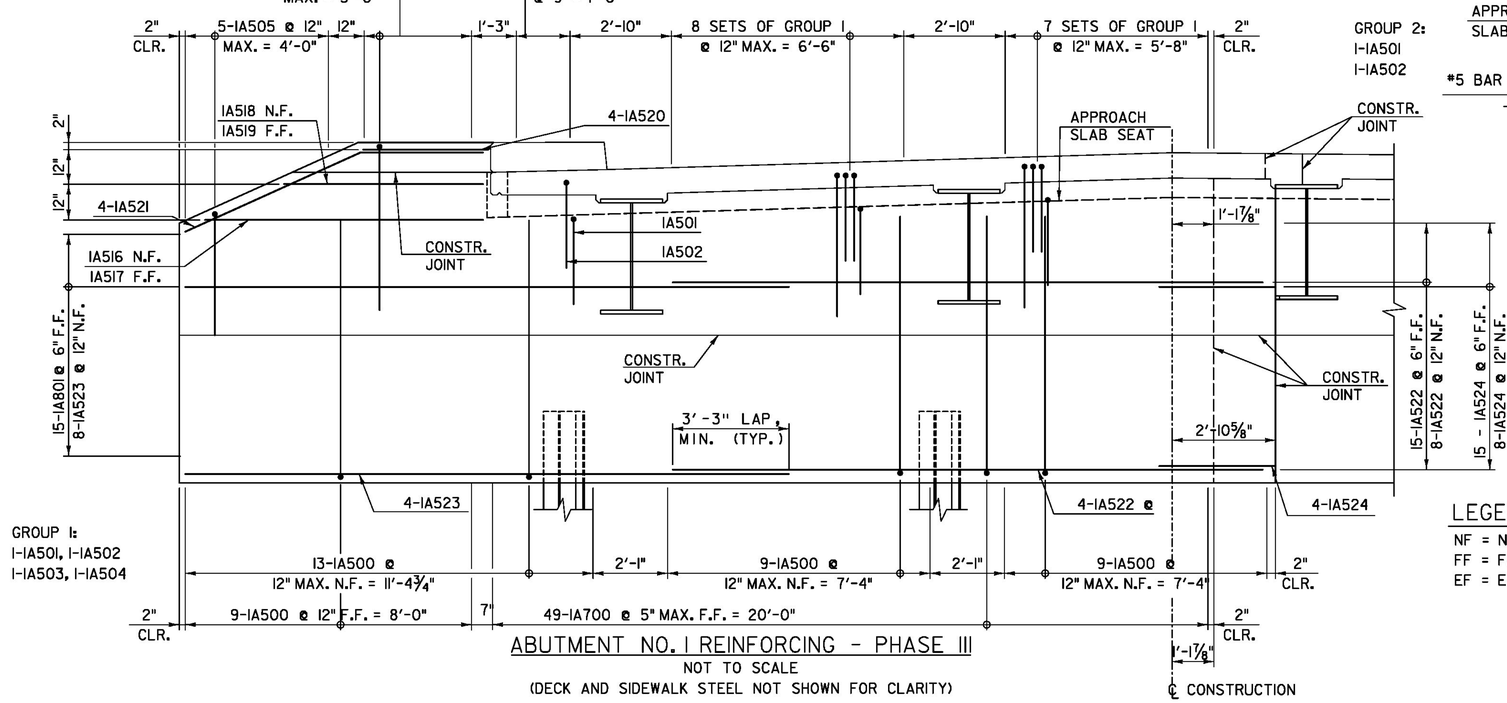

ABUTMENT NO. 1 REINFORCING - PHASE III

NOT TO SCALE

(DECK AND SIDEWALK STEEL NOT SHOWN FOR CLARITY)

LEGEND:

NF = NEAR FACE
FF = FAR FACE
EF = EACH FACE

PROJECT NAME:	BENNINGTON
PROJECT NUMBER:	BRF 1000(16)
FILE NAME: z881087bdr_abutlr.dgn	PLOT DATE: 8/7/2014
PROJECT LEADER: R. HEBERT	DRAWN BY: J. TATE
DESIGNED BY: D. MYERS	CHECKED BY: R. HEBERT
ABUTMENT NO. 1 - REINFORCING	SHEET 47 OF 75

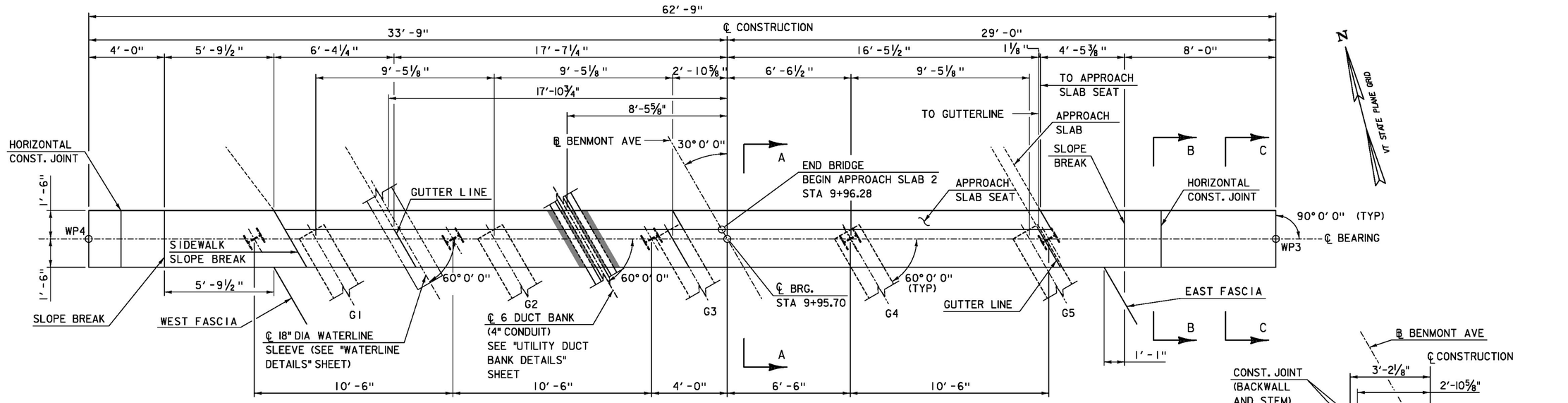

ABUTMENT NO. 2 PLAN

SCALE ⅜" = 1′-0"

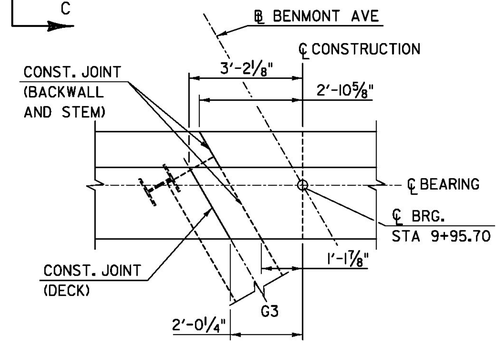

ABUTMENT NO. 2 CONST. JOINT PLAN

SCALE ½" = 1′-0"

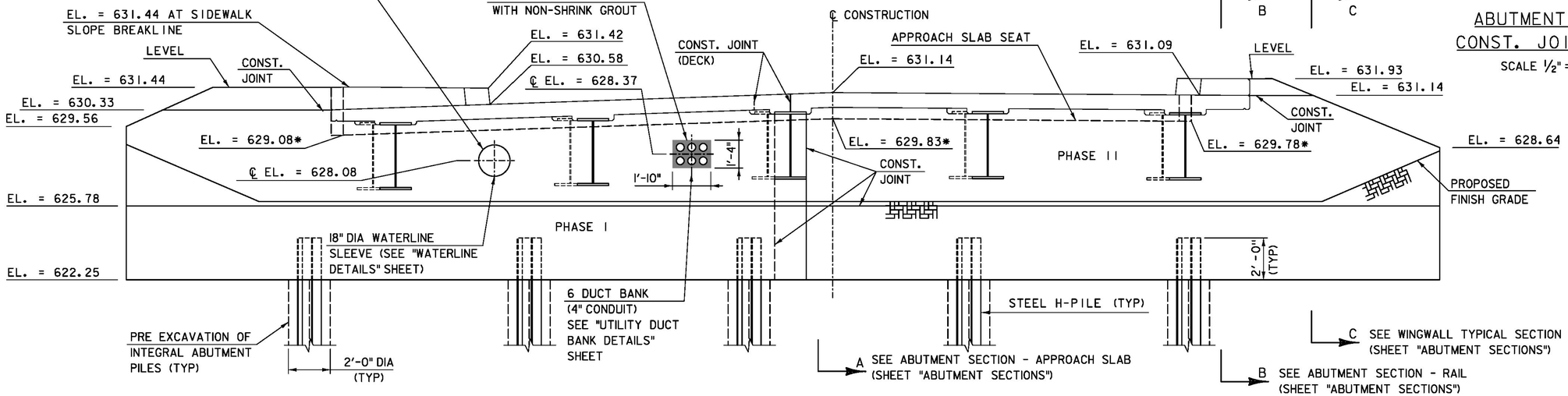

ABUTMENT NO. 2 ELEVATION

SCALE ⅜" = 1′-0"

NOTES: ELEVATIONS AT FRONT FACE OF ABUTMENT UNLESS OTHERWISE NOTED.

• ELEVATIONS AT CORNER OF APPROACH SLAB SEAT

PROJECT NAME:	BENNINGTON
PROJECT NUMBER:	BRF 1000(16)
FILE NAME: z88J087bdr_abut2.dgn	PLOT DATE: 8/8/2014
PROJECT LEADER: R. HEBERT	DRAWN BY: J.TATE
DESIGNED BY: D. MYERS	CHECKED BY: R. HEBERT
ABUTMENT NO. 2 - PLAN & ELEVATION	SHEET 48 OF 75

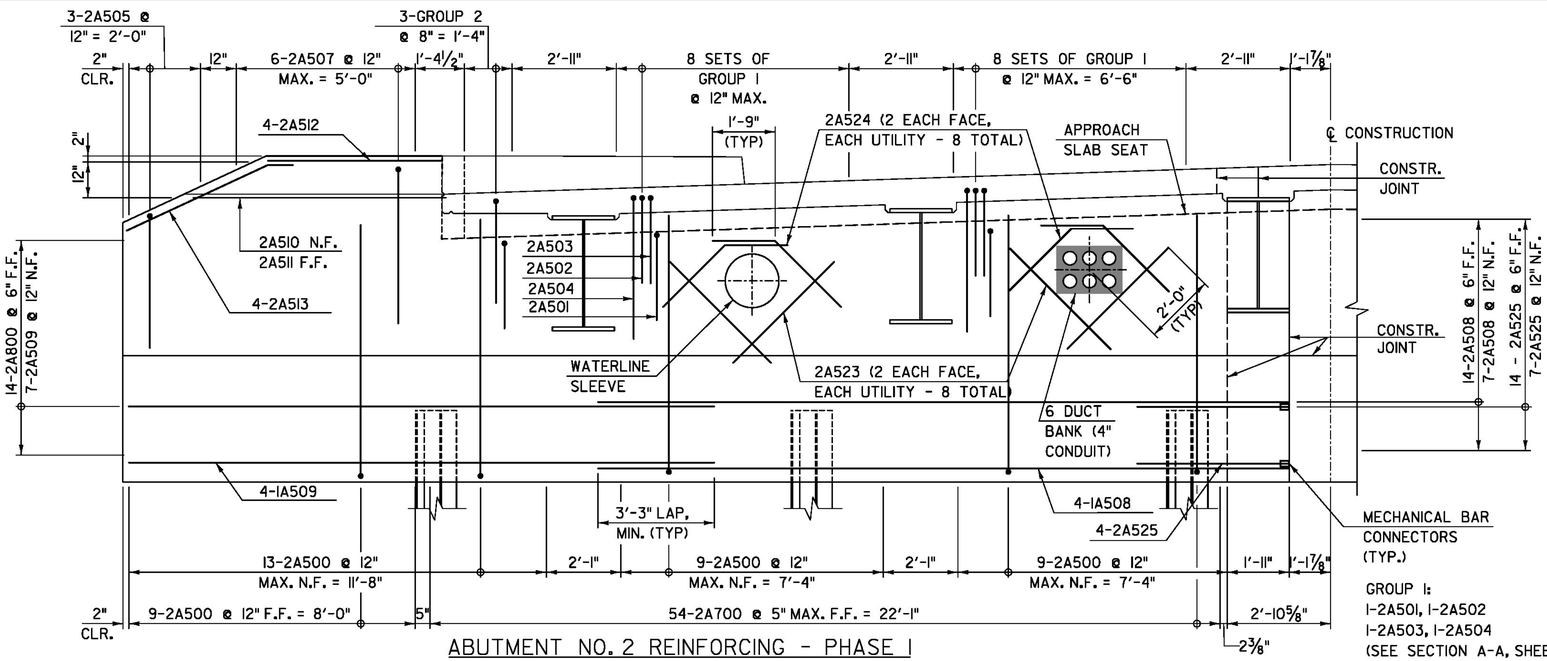

ABUTMENT NO. 2 REINFORCING - PHASE I

NOT TO SCALE

(DECK AND SIDEWALK STEEL NOT SHOWN FOR CLARITY)

NOTE:

1. ADJUST BAR SPACING AS REQUIRED TO AVOID ABUTMENT UTILITY PENETRATIONS. TRANSVERSE BARS MAY BE CUT AS NECESSARY.

GROUP 1:
1-2A501, 1-2A502
1-2A503, 1-2A504
(SEE SECTION A-A, SHEET "ABUTMENT NO. 1 - REINFORCING")

GROUP 2:
1-2A501
1-2A502

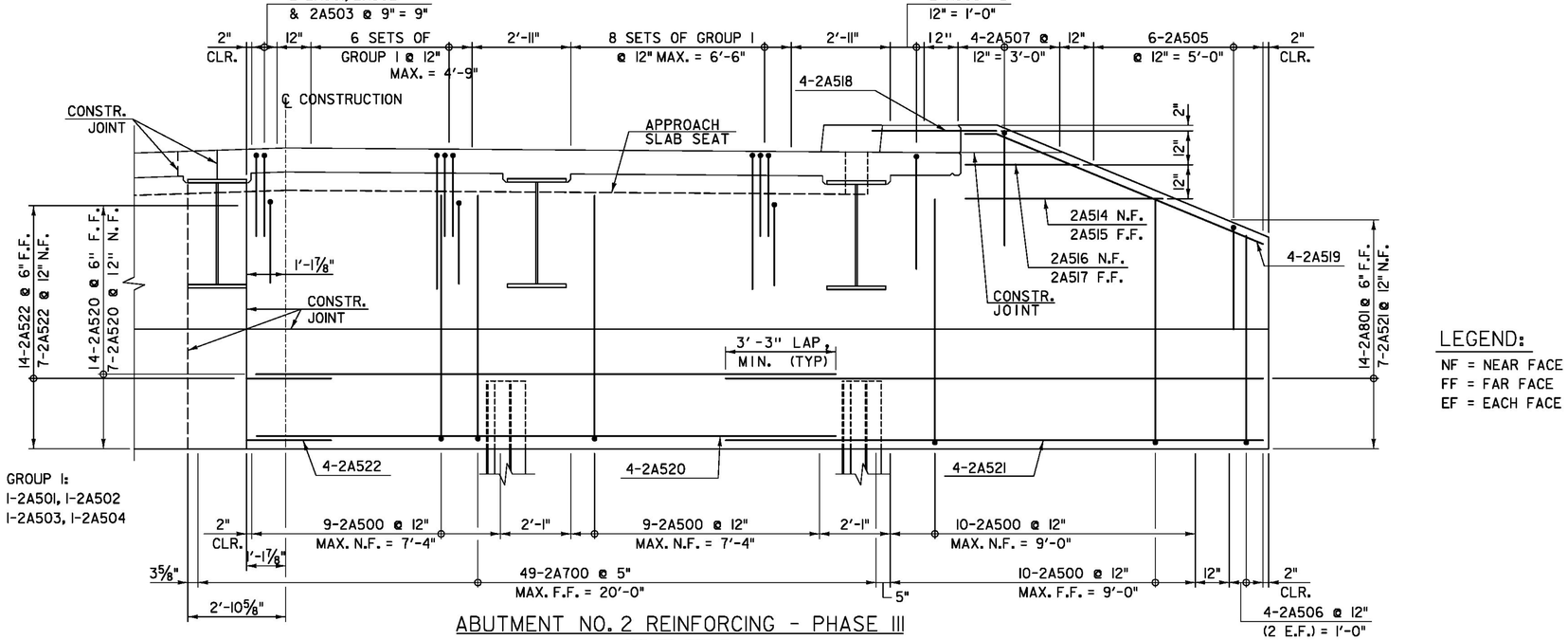

ABUTMENT NO. 2 REINFORCING - PHASE III

NOT TO SCALE

(DECK AND SIDEWALK STEEL NOT SHOWN FOR CLARITY)

LEGEND:

NF = NEAR FACE
FF = FAR FACE
EF = EACH FACE

PROJECT NAME:	BENNINGTON
PROJECT NUMBER:	BRF 1000(16)
FILE NAME: z88J087bdr_abut2r.dgn	PLOT DATE: 8/7/2014
PROJECT LEADER: R. HEBERT	DRAWN BY: J. TATE
DESIGNED BY: D. MYERS	CHECKED BY: R. HEBERT
ABUTMENT NO. 2 - REINFORCING	SHEET 49 OF 75

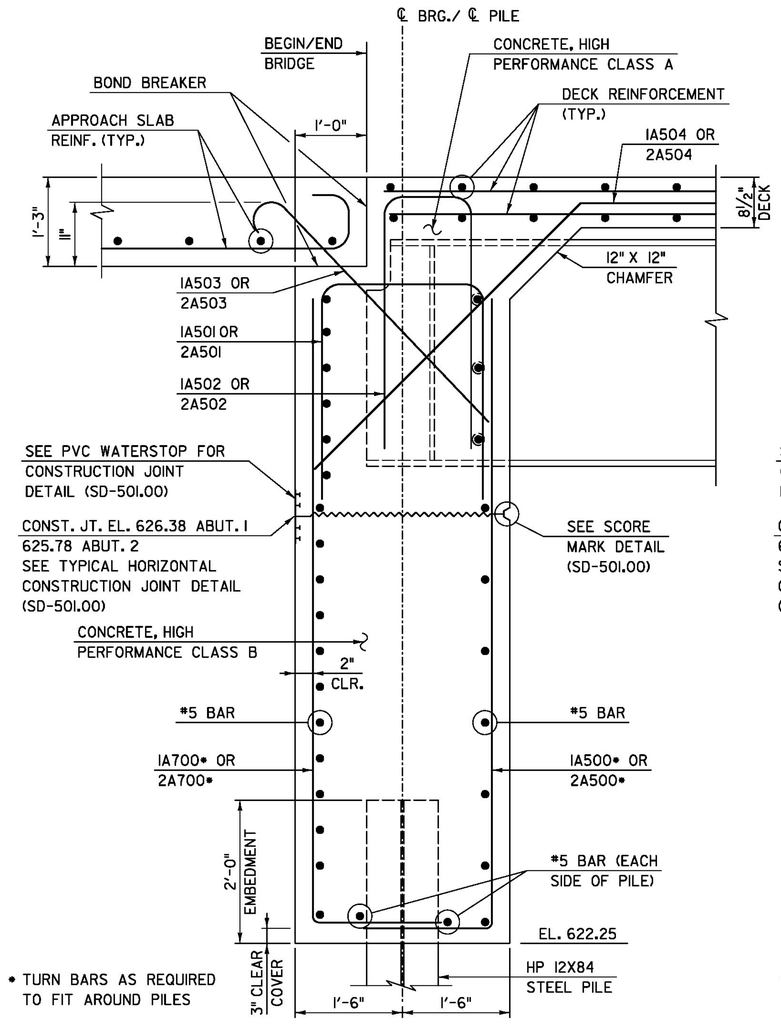

ABUTMENT SECTION - APPROACH SLAB (A-A)

NOT TO SCALE

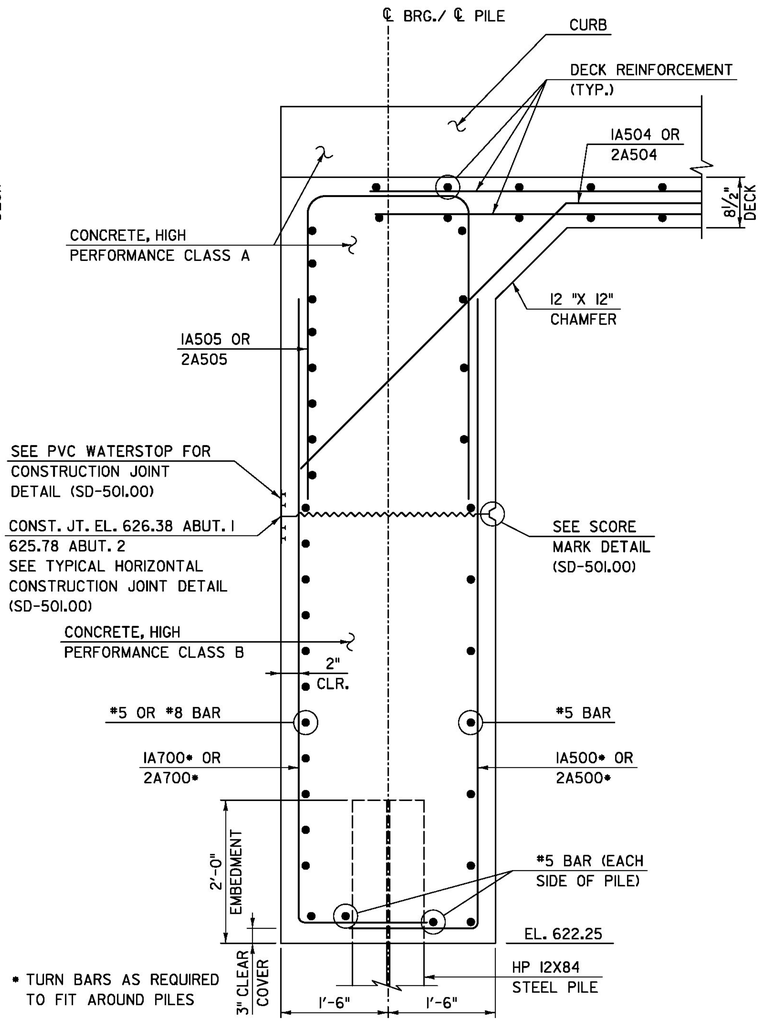

ABUTMENT SECTION - RAIL (B-B)

NOT TO SCALE

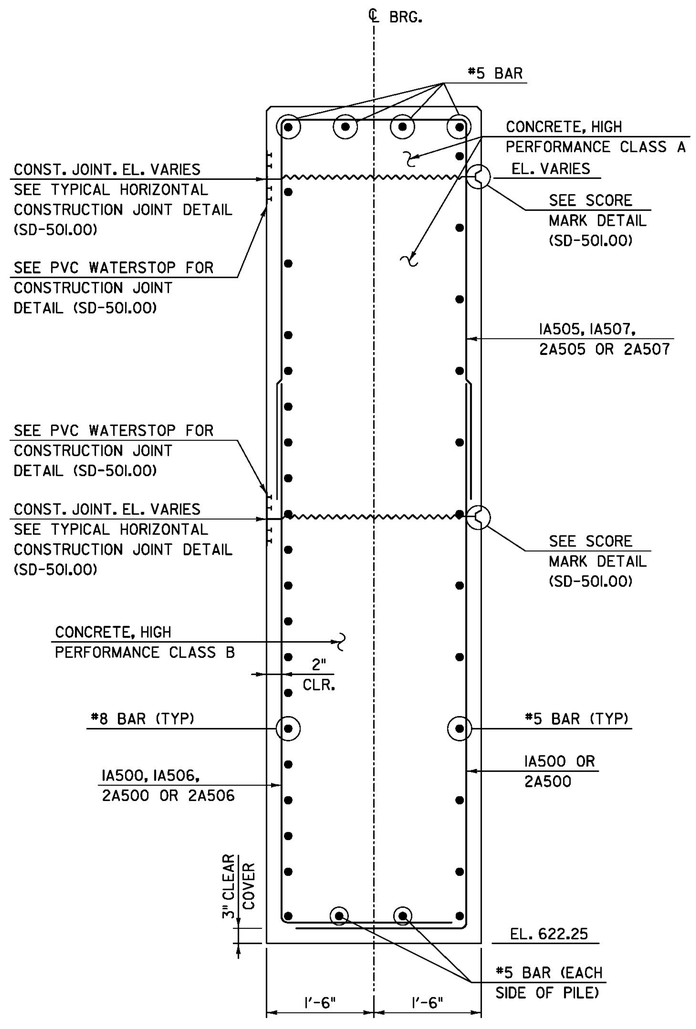

WINGWALL TYPICAL SECTION (C-C)

NOT TO SCALE

NOTES:
1. CURB REINFORCEMENT NOT SHOWN FOR CLARITY. SEE "DECK SLAB REINFORCING DETAILS" SHEET FOR CURB REINFORCING DETAILS.
2. SECTION SHOWN THROUGH ABUTMENT AT RAIL LOCATION.

PROJECT NAME:	BENNINGTON
PROJECT NUMBER:	BRF 1000(16)
FILE NAME: z881087bdr_abutsect.dgn	PLOT DATE: 8/8/2014
PROJECT LEADER: R. HEBERT	DRAWN BY: J. TATE
DESIGNED BY: D. MYERS	CHECKED BY: R. HEBERT
ABUTMENT SECTIONS	SHEET 50 OF 75

THIS SHEET REPLACES ORIGINAL CONTRACT SHEET 51

RECORD PLANS

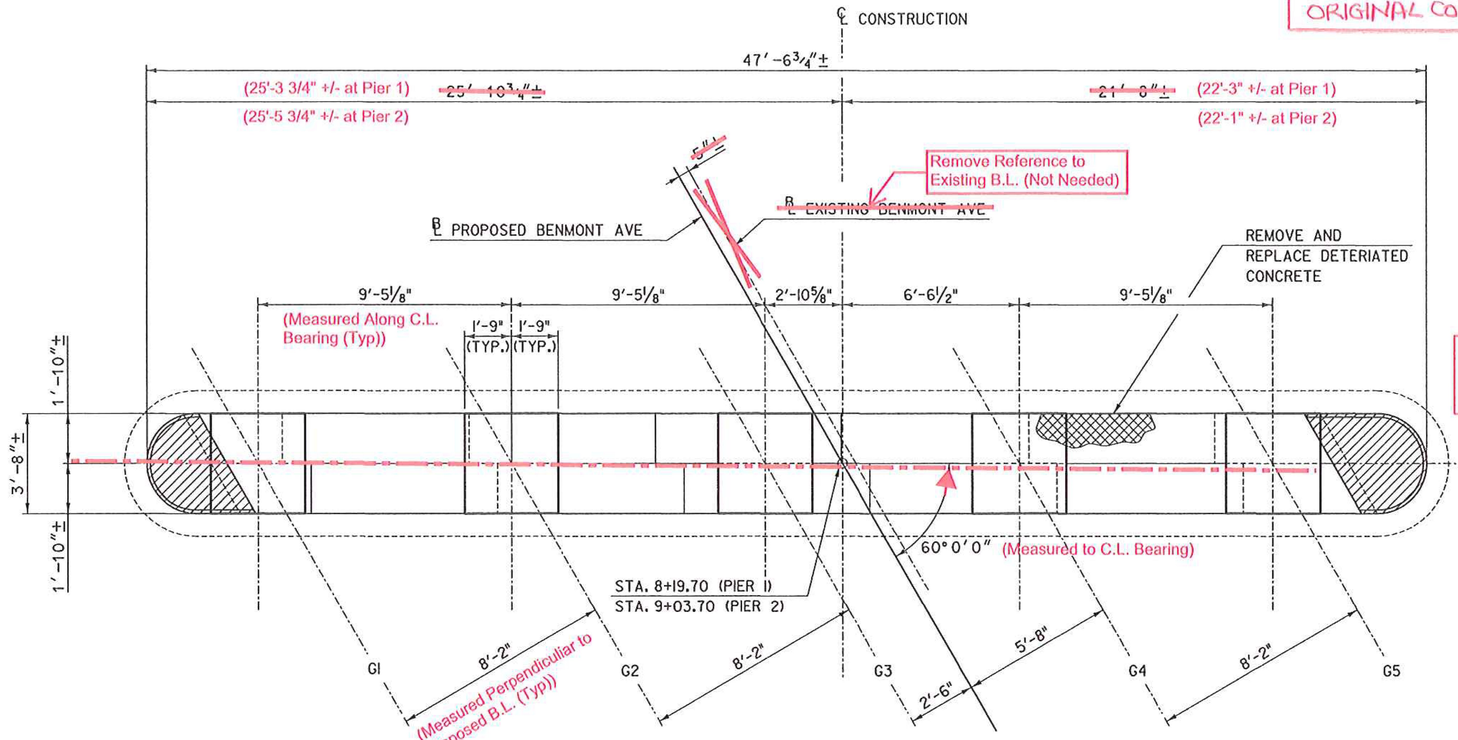

PIERS 1 AND 2 - PLAN

SCALE 3/8" = 1'-0"

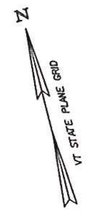

Note: C.L. Bearing and C.L. Existing Pier are Not Aligned (Small Difference)

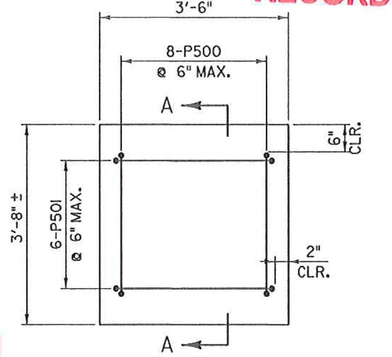

PEDESTAL REINFORCEMENT PLAN

NOT TO SCALE

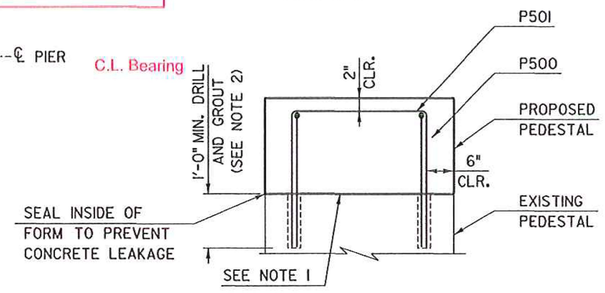

PEDESTAL REINFORCEMENT SECTION A-A

NOT TO SCALE

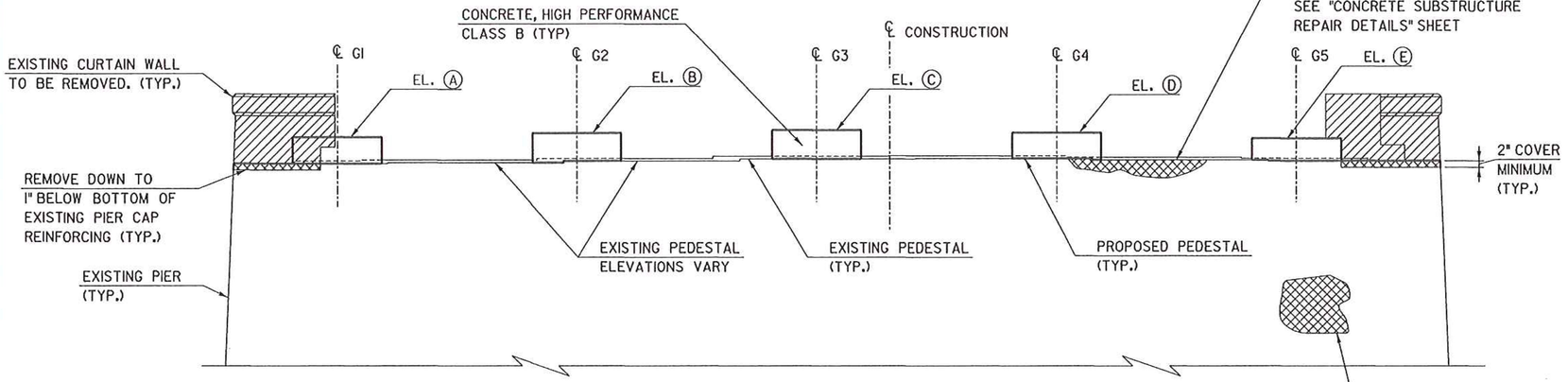

PIERS 1 AND 2 - PARTIAL ELEVATION

SCALE 3/8" = 1'-0"

LEGEND:

REMOVAL

REMOVE AND REPLACE

ELEVATION TABLE		
LOCATION	PIER 1	PIER 2
A	628.17	627.87
B	628.31	628.09
C	628.44	628.30
D	628.34	628.29
E	628.13	628.17
EXISTING PEDESTAL ELEVATIONS VARY	626.9± TO 627.4±	626.8± TO 627.3±

NOTES:

1. FOR A PERIOD OF AT LEAST ONE HOUR BEFORE THE PLACEMENT OF PEDESTAL CONCRETE MATERIALS, THE PREPARED SURFACE SHALL BE FLOODED WITH WATER. AFTER REMOVAL OF THE FREE WATER, THE PEDESTAL CONCRETE MATERIAL SHALL BE DEPOSITED ON THE DAMP SURFACE.

2. DIAMETER OF DRILLED HOLE SHALL BE DETERMINED BY THE CONTRACTOR AND APPROVED BY THE ENGINEER.

PROJECT NAME: BENNINGTON
PROJECT NUMBER: BRF 1000(16)

FILE NAME: z88J087bdr_Pier1.dgn
PROJECT LEADER: R. HEBERT
DESIGNED BY: D. MYERS
PIER MODIFICATION

PLOT DATE: 8/27/2014
DRAWN BY: D. AXTELL
CHECKED BY: R. HEBERT
SHEET 51A OF 75

THIS SHEET REPLACED
BY NEW CONTRACT SHEET 51
SEE PREVIOUS SHEET

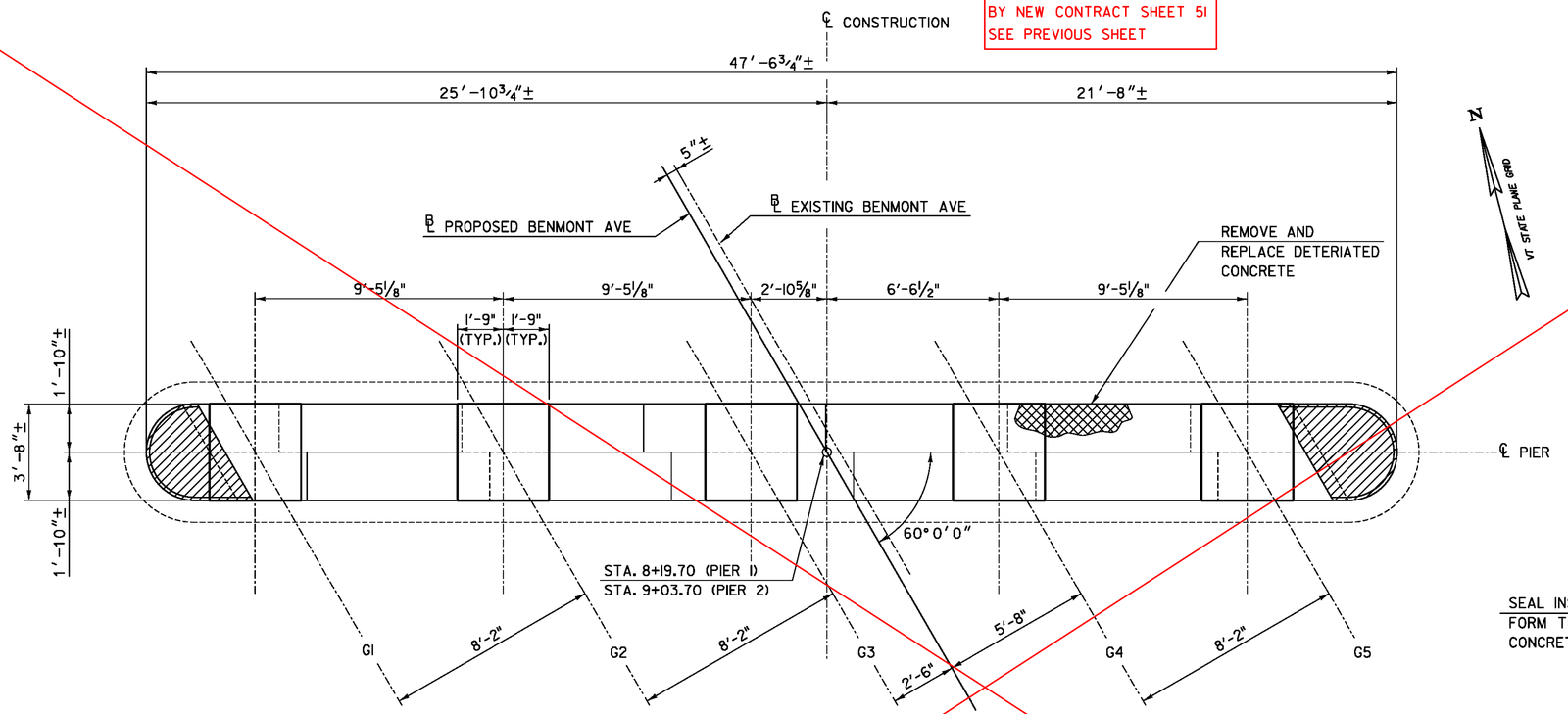

PIERS 1 AND 2 - PLAN

SCALE ⅜" = 1′-0"

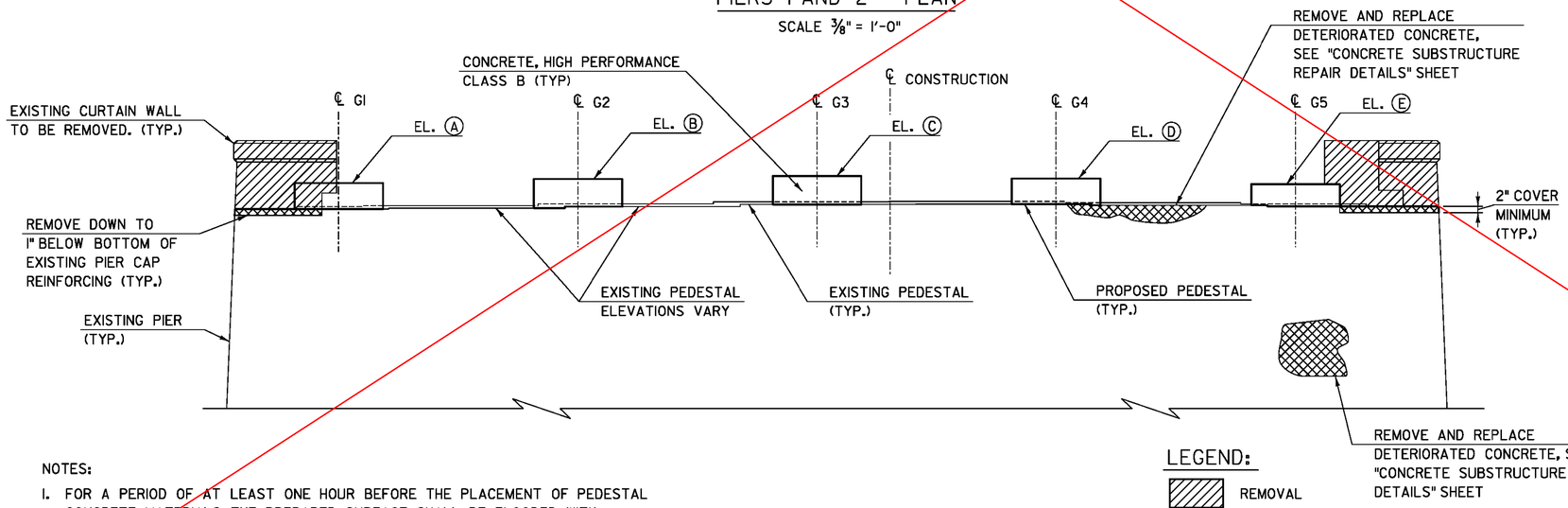

PIERS 1 AND 2 - PARTIAL ELEVATION

SCALE ⅜" = 1′-0"

LEGEND:

REMOVAL

REMOVE AND REPLACE

NOTES:

1. FOR A PERIOD OF AT LEAST ONE HOUR BEFORE THE PLACEMENT OF PEDESTAL CONCRETE MATERIALS, THE PREPARED SURFACE SHALL BE FLOODED WITH WATER. AFTER REMOVAL OF THE FREE WATER, THE PEDESTAL CONCRETE MATERIAL SHALL BE DEPOSITED ON THE DAMP SURFACE.
2. DIAMETER OF DRILLED HOLE SHALL BE DETERMINED BY THE CONTRACTOR AND APPROVED BY THE ENGINEER.

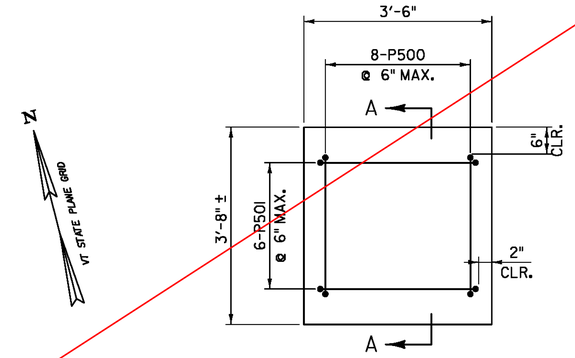

PEDESTAL REINFORCEMENT PLAN

NOT TO SCALE

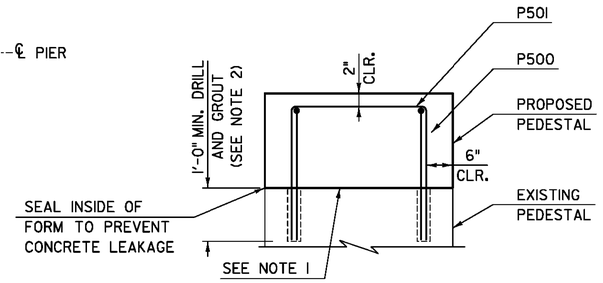

PEDESTAL REINFORCEMENT SECTION A-A

NOT TO SCALE

ELEVATION TABLE		
LOCATION	PIER 1	PIER 2
A	628.17	627.87
B	628.31	628.09
C	628.44	628.30
D	628.34	628.29
E	628.13	628.17
EXISTING PEDESTAL ELEVATIONS VARY	626.9± TO 627.4±	626.8± TO 627.3±

PROJECT NAME: BENNINGTON
PROJECT NUMBER: BRF 1000(16)

FILE NAME: z88J087bdr_Pier1.dgn
PROJECT LEADER: R. HEBERT
DESIGNED BY: D. MYERS
PIER MODIFICATION

PLOT DATE: 8/8/2014
DRAWN BY: D. AXTELL
CHECKED BY: R. HEBERT
SHEET 51B OF 75

EXISTING SUBSTRUCTURE CONCRETE REPAIR NOTES:

1. THIS WORK SHALL INCLUDE REMOVAL AND DISPOSAL OF UNSOUND AND DELAMINATED CONCRETE FROM THE EXISTING PIERS AS DIRECTED BY THE ENGINEER. THE PREPARED SURFACES SHALL BE THOROUGHLY SANDBLASTED TO REMOVE ALL LOOSE MATERIAL AND ANY CONTAMINANTS OR EFFLORESCENCE. THE REINFORCING STEEL (IF EXPOSED), SHALL BE SANDBLASTED. THE MATERIAL USED TO FILL A PATCH SHALL BE PLACED AND FINISHED OR FORMED SO THAT THE FINAL SURFACE WILL HAVE THE SAME SCORE MARKS AND EXTERIOR FACE APPEARANCE AS THE ORIGINAL SURFACES BEING REPAIRED. THE SURFACE SHALL BE THOROUGHLY WETTED PRIOR TO PLACEMENT, THE SURFACE SHALL BE COATED WITH NEAT CEMENT PASTE, MIXED TO THE CONSISTENCY OF THICK LATEX PAINT, AND THOROUGHLY BRUSHED INTO THE SURFACE. WHEN "OVERHEAD AND VERTICAL CONCRETE REPAIR MATERIAL" CONFORMING TO SUBSECTION 780.02 IS USED, THE BONDING AGENT, (IF ANY REQUIRED) AND ITS APPLICATION PROCEDURE SHALL COMPLY WITH THE REQUIREMENTS OF THE PATCHING MATERIAL MANUFACTURER. PAYMENT FOR BONDING AGENT WILL BE INCIDENTAL TO ITEM 580.13, 580.14 OR 580.15 SUBSECTION.

2. THE LIMITS FOR REMOVAL OF CONCRETE UNDER ITEM 580.13, "REPAIR OF CONCRETE SUBSTRUCTURE SURFACE, CLASS I" SHALL BE FROM THE EXISTING CONCRETE SURFACE TO A MAXIMUM DEPTH OF THE OUTSIDE FACE OF THE FIRST MAT OF REINFORCING STEEL. ALL WORK AND MATERIALS NECESSARY FOR PREPARING A PATCH AND FILLING IT SHALL BE INCLUDED IN THE UNIT PRICE BID FOR ITEM 580.13, "REPAIR OF CONCRETE SUBSTRUCTURE SURFACE, CLASS I". THE FILLING MATERIAL SHALL BE "OVERHEAD AND VERTICAL CONCRETE REPAIR MATERIAL" CONFORMING TO SUBSECTION 780.02. THE EDGES OF ALL PATCHES SHALL BE SAW CUT IN STRAIGHT LINES TO A MINIMUM DEPTH OF 1 INCH. IF MORE THAN 1/4 INCH OF THE REBAR IS EXPOSED, OR THE BOND BETWEEN THE REBAR AND THE CONCRETE IS BROKEN, THEN PROCEED TO ITEM 580.14, "REPAIR OF CONCRETE SUBSTRUCTURE SURFACE, CLASS II".

3. THE LIMITS FOR REMOVAL OF CONCRETE UNDER THE ITEM 580.14, "REPAIR OF CONCRETE SUBSTRUCTURE SURFACE, CLASS II" SHALL BE FROM THE EXISTING CONCRETE SURFACE TO A MINIMUM DEPTH OF 3/4 INCH +/- 1/4 INCH INSIDE THE INSIDE FACE OF THE FIRST MAT OF REINFORCING STEEL AND TO A MAXIMUM DEPTH OF 6 INCHES FROM THE EXISTING CONCRETE SURFACE. ALL WORK AND MATERIALS NECESSARY FOR PREPARING A PATCH AND FILLING IT SHALL BE INCLUDED IN THE UNIT PRICE BID FOR ITEM 580.14, "REPAIR OF CONCRETE SUBSTRUCTURE SURFACE, CLASS II". THE FILLING MATERIAL SHALL BE "RAPID SETTING CONCRETE REPAIR MATERIAL" CONFORMING TO SUBSECTION 780.03. THE EDGES OF ALL PATCHES SHALL BE SAW CUT IN STRAIGHT LINES TO A MINIMUM DEPTH OF 1 INCH.

4. THE LIMITS FOR REMOVAL OF CONCRETE UNDER THE ITEM 580.15, "REPAIR OF CONCRETE SUBSTRUCTURE SURFACE, CLASS III" SHALL BE FROM THE EXISTING CONCRETE SURFACE TO A DEPTH OF GREATER THAN 6 INCHES. ALL WORK AND MATERIALS NECESSARY FOR PREPARING A PATCH AND FILLING IT SHALL BE INCLUDED IN THE UNIT PRICE BID FOR ITEM 580.15, "REPAIR OF CONCRETE SUBSTRUCTURE SURFACE, CLASS III". THE FILLING MATERIAL SHALL BE "RAPID SETTING CONCRETE REPAIR MATERIAL WITH COARSE AGGREGATE" CONFORMING TO SUBSECTION 780.04. THE EDGES OF ALL PATCHES SHALL BE SAW CUT IN STRAIGHT LINES TO A MINIMUM DEPTH OF 1 INCH.

5. IF PNEUMATICALLY APPLIED CONCRETE IS SELECTED FOR REPAIR OF CONCRETE SUBSTRUCTURE SURFACE, CLASS II OR III, THEN THIS TYPE OF CONCRETE REPAIR SHALL BE CONFINED ONLY TO VERTICAL AND OVERHEAD SURFACES OF THE SUBSTRUCTURE. ALSO, THE BRIDGE AND GIRDERS SHOULD BE COMPLETELY PROTECTED FROM REBOUND MATERIAL DURING PNEUMATICALLY APPLIED CONCRETE APPLICATION PROCEDURES.

6. THE ENGINEER SHALL ORDER REPLACEMENT OF ANY SUBSTRUCTURE REINFORCING STEEL THAT IS DETERIORATED (WITH MORE THAN 25% SECTION LOSS) WITH NEW REINFORCING STEEL OF THE SAME SIZE. ALL REINFORCING STEEL SHALL HAVE AN APPROPRIATE LAP SPLICE. SUBSTRUCTURE REINFORCING STEEL REPLACED WILL BE PLAIN BAR REINFORCING STEEL, LEVEL 1 OR BETTER AND WILL BE INCIDENTAL TO ITEM 580.14 "REPAIR OF CONCRETE SUBSTRUCTURE SURFACE CLASS II" OR ITEM 580.15. "REPAIR OF CONCRETE SUBSTRUCTURE SURFACE CLASS III".

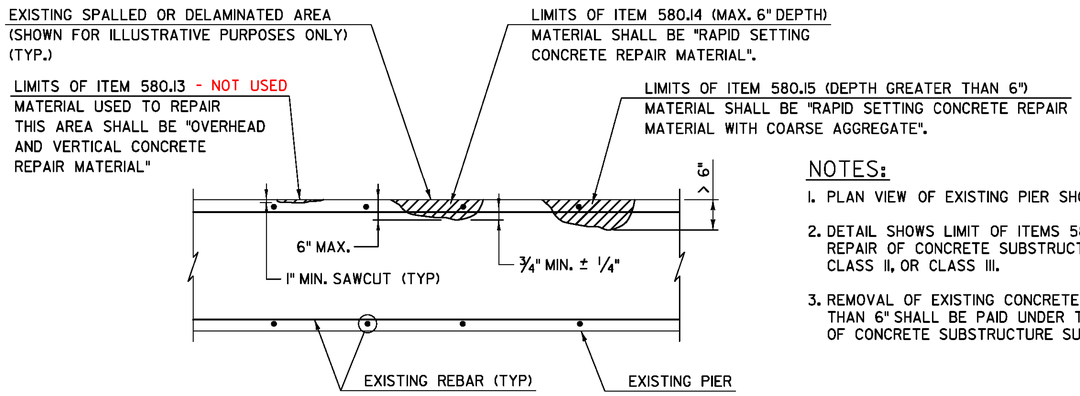

CONCRETE SUBSTUCTURE REPAIR DETAIL

NOT TO SCALE

NOTE: NO REBAR WAS FOUND IN EITHER PIER

NOTES:

1. PLAN VIEW OF EXISTING PIER SHOWN.
2. DETAIL SHOWS LIMIT OF ITEMS 580.13, 580.14 AND 580.15 REPAIR OF CONCRETE SUBSTRUCTURE SURFACE, CLASS I, CLASS II, OR CLASS III.
3. REMOVAL OF EXISTING CONCRETE TO A DEPTH GREATER THAN 6" SHALL BE PAID UNDER THE ITEM 580.15, "REPAIR OF CONCRETE SUBSTRUCTURE SURFACE, CLASS III".

PROJECT NAME:	BENNINGTON
PROJECT NUMBER:	BRF 1000(16)
FILE NAME: z881087bdr_repair.dgn	PLOT DATE: 8/27/2014
PROJECT LEADER: R. HEBERT	DRAWN BY: S. MORGAN
DESIGNED BY: D. MYERS	CHECKED BY: R. HEBERT
CONCRETE SUBSTRUCTURE REPAIR DETAILS	SHEET 52 OF 75

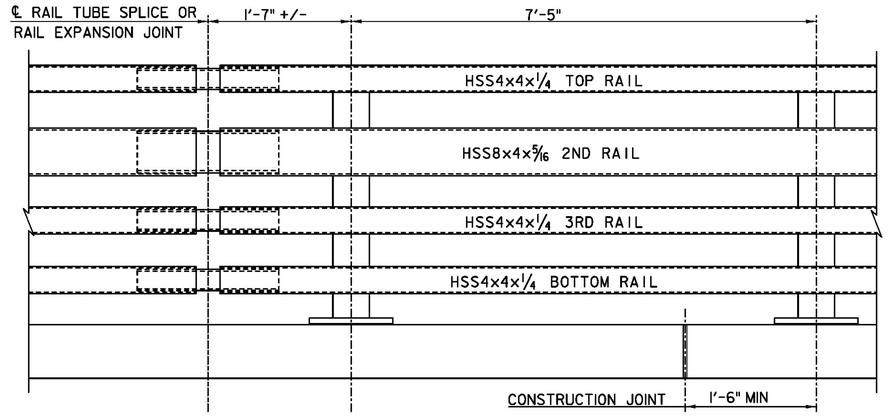

BRIDGE RAILING ELEVATION

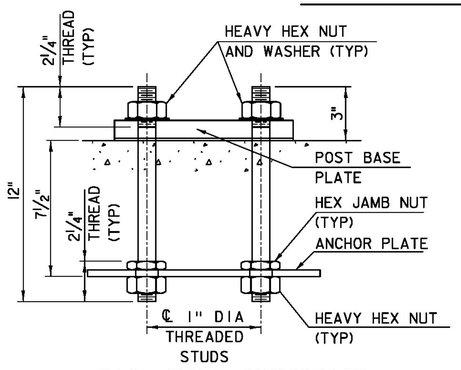

RAIL POST ANCHORAGE

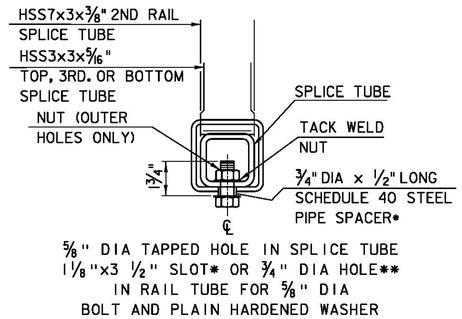

⅝" DIA TAPPED HOLE IN SPLICE TUBE
1⅛"×3 ½" SLOT* OR ¾" DIA HOLE**
IN RAIL TUBE FOR ⅝" DIA
BOLT AND PLAIN HARDENED WASHER

A-A RAIL TUBE SPLICE AND RAIL EXPANSION JOINT SECTION

*EXPANSION JOINT
** SPLICE

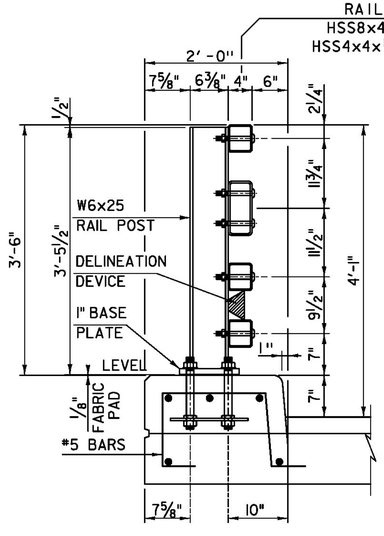

TYPICAL SECTION

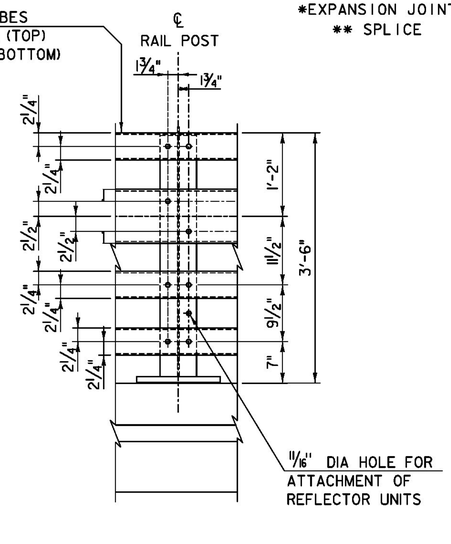

ELEVATION

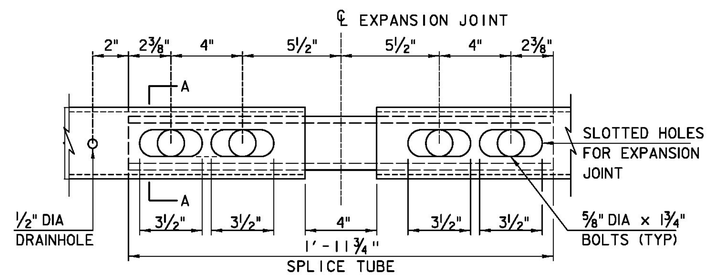

EXPANSION JOINT DETAIL

(BOTTOM VIEW)
(SEE NOTE #4, SHEET "RAILING DETAIL SHEET 2")

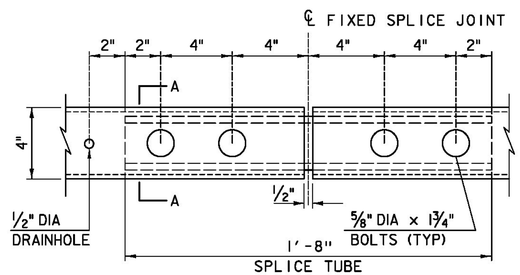

FIXED SPLICE JOINT DETAIL

(BOTTOM VIEW)

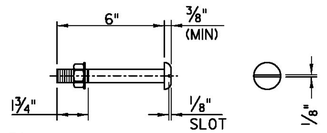

¾" DIA A449 (TYPE 1) ROUND HEAD BOLT

(WITH WASHER AND PREVAILING TORQUE TYPE LOCK NUT)
(SEE NOTE #8)
ONLY FULL DIAMETER BODY BOLTS WILL BE ALLOWED.

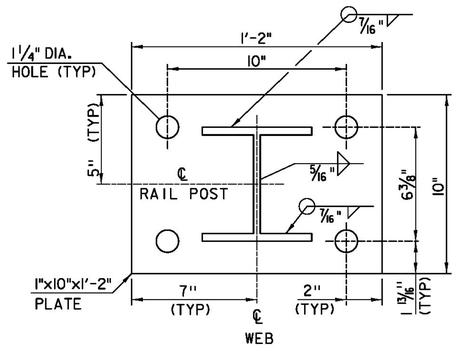

POST BASE PLATE

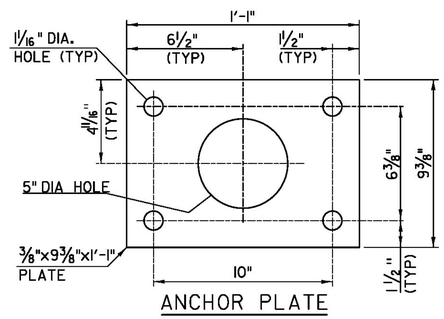

ANCHOR PLATE

NOTES:

1. ALL WORK AND MATERIALS SHALL CONFORM TO SECTION 525.
2. PRIOR TO GALVANIZING THE ASSEMBLED POST, GRIND ALL EDGES TO A MINIMUM RADIUS OF 1/16".
3. ALL POSTS SHALL BE SET NORMAL TO GRADE.
4. SECTIONS OF RAIL TUBE SHALL BE ATTACHED TO A MINIMUM OF TWO BRIDGE RAIL POSTS AND PREFERABLY TO AT LEAST FOUR POSTS.
5. RAIL TUBE EXPANSION JOINTS SHALL BE PROVIDED IN ANY RAIL BAY SPANNING THE END OF AN INTEGRAL ABUTMENT BRIDGE AND AT ALL SUPERSTRUCTURE EXPANSION JOINTS. EXPANSION JOINT WIDTH SHALL BE 4" AT 45°F AND WILL BE ADJUSTED IN THE FIELD BY THE ENGINEER FOR OTHER TEMPERATURES.
6. HOLES IN RAILS FOR RAIL TUBE ATTACHMENT MAY BE FIELD-DRILLED. HOLES SHALL BE COATED WITH AN APPROVED ZINC-RICH PAINT PRIOR TO INSTALLATION.
7. RAIL POST ANCHORING NUTS SHALL BE TIGHTENED TO A SNUG FIT AND GIVEN AN ADDITIONAL ONE-EIGHTH TURN.
8. RAIL TUBES SHALL BE ATTACHED USING ¾" FULL DIAMETER BODY ASTM A 449 (TYPE 1) ROUND HEAD BOLTS INSERTED THROUGH THE FACE OF THE TUBE. HOLES IN POSTS SHALL BE 1/16" LARGER THAN THE BOLT SIZE.
9. ANY BENDING OF RAIL SHALL BE DONE AT A FABRICATION PLANT ACCORDING TO A PROCEDURE PROVIDED BY THE FABRICATOR.
10. THE MINIMUM DISTANCE FROM THE POST TO AN EXPANSION JOINT SHALL BE DETERMINED BY THE MINIMUM EDGE DISTANCE OF 5" FROM ANY ANCHOR STUD TO THE END OF THE DECK, OR TO THE EXPANSION JOINT RECESS POUR, IF ONE IS USED.
11. SEE STANDARD DRAWING G-1 FOR DETAILS OF DELINEATORS. A DELINEATOR SHALL BE INSTALLED AT 30 FOOT SPACING OR THE NEAREST POST. WHITE IS TO BE INSTALLED ON THE DRIVER'S RIGHT. FOR ONE WAY BRIDGES, YELLOW IS TO BE INSTALLED ON THE DRIVER'S LEFT. PAYMENT SHALL BE INCIDENTAL TO OTHER ITEMS.
12. THIS RAILING MEETS THE REQUIREMENTS FOR A TL-4 SERVICE LEVEL.

PROJECT NAME:	BENNINGTON
PROJECT NUMBER:	BRF 1000(16)

FILE NAME: z881087bdr_rail_01.dgn	PLOT DATE: 8/8/2014
PROJECT LEADER: R. HEBERT	DRAWN BY: S. MORGAN
DESIGNED BY: D. MYERS	CHECKED BY: R. HEBERT
RAILING DETAIL SHEET 1	SHEET 53 OF 75

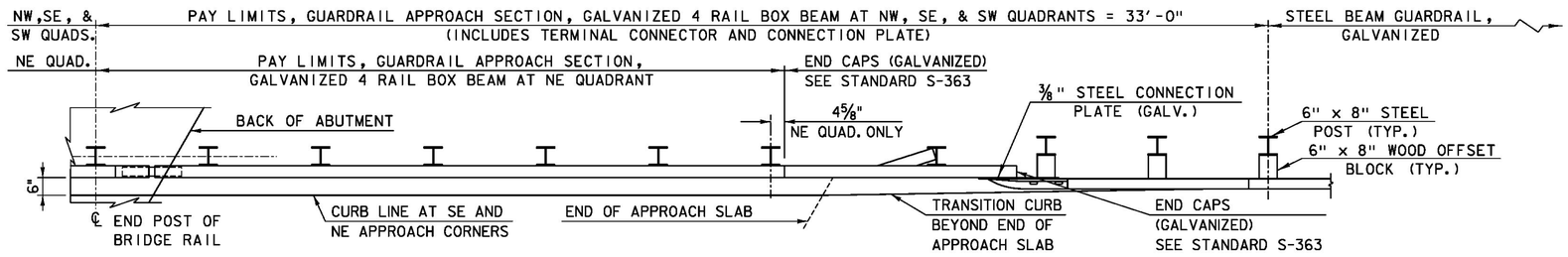

PLAN VIEW - APPROACH RAIL

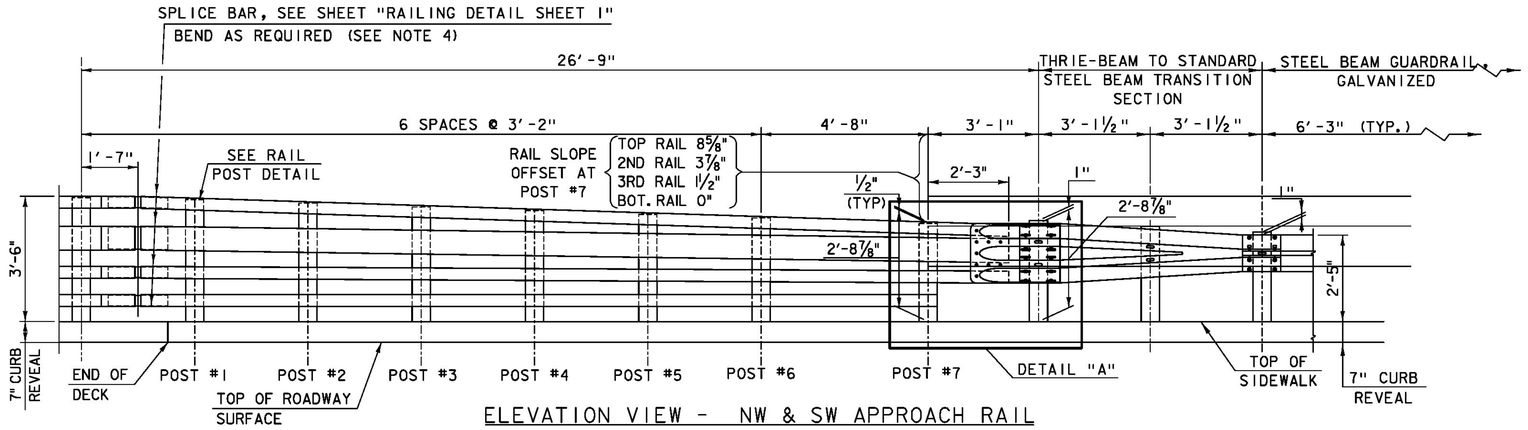

ELEVATION VIEW - NW & SW APPROACH RAIL

SCALE: 1/2" = 1'-0"

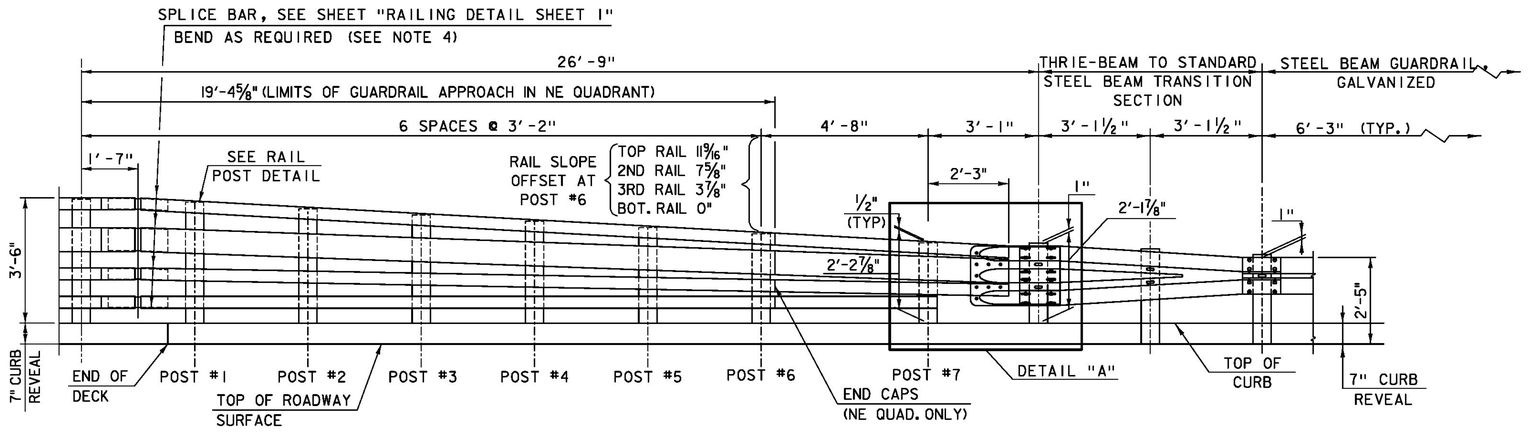

ELEVATION VIEW - NE & SE APPROACH RAIL

SCALE: 1/2" = 1'-0"

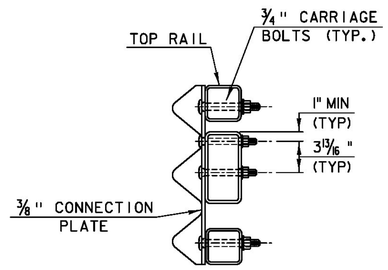

SECTION C-C
CONNECTION PLATE
(NOT TO SCALE)

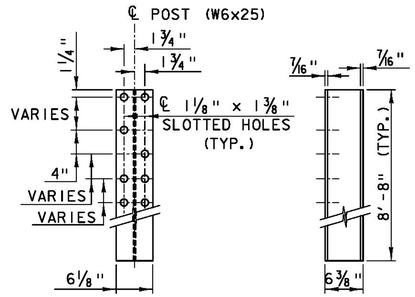

RAIL POST
(NOT TO SCALE)

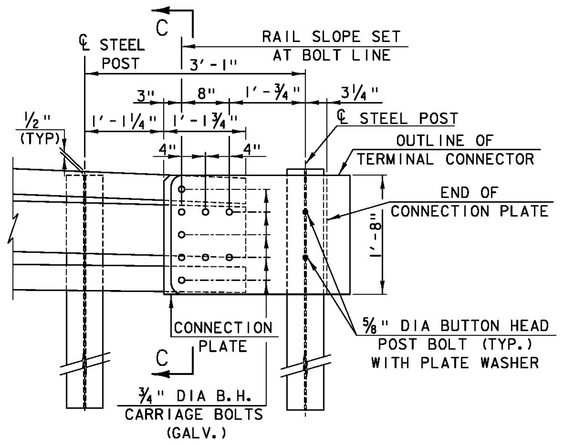

DETAIL A
(NOT TO SCALE)

NOTES:

1. PAYMENT FOR GUARDRAIL APPROACH SECTION, GALVANIZED 4 RAIL BOX BEAM SHALL INCLUDE THE TERMINAL CONNECTOR, THE CONNECTION PLATE, RAIL, POSTS, BLOCKS AND ATTACHMENT HARDWARE.
2. ALL BRIDGE APPROACH RAIL MATERIALS, DIMENSION SIZES AND NOTES SHALL BE THE SAME AS THOSE OF THE BRIDGE RAIL, UNLESS OTHERWISE NOTED.
3. APPROACH RAIL BOLTS SHALL BE ASTM A307 GRADE A AND NUTS SHALL BE AASHTO M291 (ASTM A563 GRADE A OR BETTER) (GALVANIZED). WASHERS SHALL BE ASTM F844.
4. FABRICATE SPLICE BARS TO MATCH BEND ANGLES USING A COMPLETE PENETRATION (B-U2) WELDED SPLICE AT CENTERLINE OF RAIL EXPANSION JOINT. NORTH APPROACH SPLICES ALSO BEND IN PLAN; REFER TO SHEET "RAIL LAYOUT SHEET" FOR BEND ANGLES.

LEGEND:

NW	NORTH WEST
NE	NORTH EAST
SW	SOUTH WEST
SE	SOUTH EAST

PROJECT NAME: BENNINGTON
PROJECT NUMBER: BRF 1000(16)

FILE NAME: z88J087bdr_rail_02.dgn
PROJECT LEADER: R. HEBERT
DESIGNED BY: D. MYERS
RAILING DETAIL SHEET 2

PLOT DATE: 8/8/2014
DRAWN BY: S. MORGAN
CHECKED BY: R. HEBERT
SHEET 54 OF 75

STATE OF VERMONT
AGENCY OF TRANSPORTATION

REINFORCING STEEL SCHEDULE

ITEM	EACH	SIZE	LENGTH	MARK	TYPE	A	B	C	D	E	F	G	H	J	K	R	O
	DECK																
	1155	5	40'- 0"	D500	STR												
	992	5	21'- 7"	D501	STR												
	1068	5	4'- 6"	D502	1	0'- 7"	3'- 11"					0'- 0"					
	1076	5	18'- 8"	D503	STR												
	4	5	21'- 8"	D504	STR												
	8	5	17'- 9"	D505	STR												
	8	5	16'- 11"	D506	STR												
	8	5	16'- 0"	D507	STR												
	8	5	15'- 2"	D508	STR												
	8	5	14'- 4"	D509	STR												
	8	5	13'- 5"	D510	STR												
	8	5	12'- 7"	D511	STR												
✳	9	5	11'- 8"	D512	STR												
	8	5	10'- 10"	D513	STR												
	8	5	10'- 0"	D514	STR												
	8	5	9'- 1"	D515	STR												
	8	5	8'- 3"	D516	STR												
	8	5	7'- 4"	D517	STR												
	8	5	6'- 5"	D518	STR												
	8	5	5'- 8"	D519	STR												
	8	5	4'- 9"	D520	STR												
	8	5	3'- 11"	D521	STR												
	8	5	3'- 0"	D522	STR												
	8	5	2'- 2"	D523	STR												
	403	5	4'- 5"	D524	S5	0'- 6"	1'- 0"	1'- 5"	1'- 0"			0'- 6"					
	291	5	2'- 9"	D525	12	0'- 7"	1'- 4"	0'- 10"	0'- 0"				0'- 0"		0'- 0"		
	291	5	1'- 4"	D526	2	0'- 10"	0'- 6"					0'- 0"					
	291	5	1'- 2"	D527	1	0'- 7"	0'- 7"					0'- 0"					
	112	5	2'- 8"	D528	1	0'- 7"	1'- 6"					0'- 7"					
	287	5	7'- 1"	D529	1	0'- 7"	5'- 11"					0'- 7"					
	161	5	6'- 11"	D530	STR												
	4	5	9'- 3"	D531	STR												
	10	5	4'- 6"	D532	17		1'- 10"	0'- 10"	1'- 10"								
	2	5	7'- 3"	D533	1	0'- 7"	6'- 1"					0'- 7"					
	2	5	8'- 0"	D534	1	0'- 7"	6'- 10"					0'- 7"					
	112	5	2'- 9"	D535	12	0'- 7"	1'- 4"	0'- 10"	0'- 0"				0'- 0"		0'- 0"		
	112	5	1'- 4"	D536	2	0'- 10"	0'- 6"					0'- 0"					
	112	5	1'- 2"	D537	1	0'- 7"	0'- 7"					0'- 0"					
	ABUTMENT 1																
	80	5	9'- 3"	1A500	17		2'- 6"	6'- 9"	0'- 0"								
	34	5	10'- 1"	1A501	17		3'- 9"	2'- 7"	3'- 9"								
	34	5	7'- 10"	1A502	17		3'- 2"	1'- 6"	3'- 2"								
	31	5	4'- 9"	1A503	1	0'- 7"	4'- 2"					0'- 0"					
	31	5	7'- 4"	1A504	5	0'- 0"	5'- 4"	2'- 0"	0'- 0"			0'- 0"	1'- 5"		1'- 5"		6'- 9"
	13	5	12'- 11"	1A505	17		5'- 2"	2'- 7"	5'- 2"								
	2	5	8'- 10"	1A506	17		2'- 6"	6'- 4"	0'- 0"								
	8	5	13'- 11"	1A507	17		5'- 8"	2'- 7"	5'- 8"								
	27	5	18'- 10"	1A508	STR												
✳	13	5	18'- 5"	1A509	STR												
	1	5	6'- 5"	1A510	STR												
	1	5	7'- 11"	1A511	STR												
	1	5	4'- 0"	1A512	STR												
	1	5	5'- 7"	1A513	STR												
	4	5	4'- 0"	1A514	STR												
	4	5	11'- 8"	1A515	19		3'- 3"	8'- 5"	0'- 0"				1'- 3"		3'- 0"		11'- 5"
	1	5	8'- 10"	1A516	STR												
	1	5	7'- 4"	1A517	STR												
	1	5	6'- 8"	1A518	STR												
	1	5	5'- 1"	1A519	STR												
	4	5	4'- 0"	1A520	STR												
	4	5	8'- 6"	1A521	19		3'- 3"	5'- 3"	0'- 0"				1'- 7"		2'- 10"		8'- 1"
	27	5	17'- 1"	1A522	STR												
	12	5	14'- 7"	1A523	STR												
	27	5	3'- 3"	1A524	STR												
	8	5	4'- 0"	1A525	STR												
	8	5	4'- 5"	1A526	19		1'- 9"	2'- 8"	0'- 0"				1'- 3"		1'- 3"		
	27	5	4'- 3"	1A527	STR												
	106	7	9'- 3"	1A700	17		2'- 6"	6'- 9"	0'- 0"								
	15	8	18'- 5"	1A800	STR												
✳	16	8	14'- 7"	1A801	STR												

ITEM	EACH	SIZE	LENGTH	MARK	TYPE	A	B	C	D	E	F	G	H	J	K	R	O
	ABUTMENT 2																
	78	5	8'- 10"	2A500	17		2'- 6"	6'- 4"	0'- 0"								
	35	5	10'- 3"	2A501	17		3'- 10"	2'- 7"	3'- 10"								
	35	5	7'- 10"	2A502	17		3'- 2"	1'- 6"	3'- 2"								
	32	5	4'- 9"	2A503	1	0'- 7"	4'- 2"					0'- 0"					
	30	5	7'- 4"	2A504	3	0'- 0"	5'- 4"	2'- 0"	0'- 0"	0'- 0"	0'- 0"	0'- 0"	1'- 5"		1'- 5"		6'- 9"
	11	5	13'- 3"	2A505	17		5'- 4"	2'- 7"	5'- 4"								
	4	5	8'- 4"	2A506	17		2'- 6"	5'- 10"	0'- 0"								
	10	5	14'- 9"	2A507	17		6'- 1"	2'- 7"	6'- 1"								
	25	5	18'- 10"	2A508	STR												
	11	5	16'- 10"	2A509	STR												
	1	5	7'- 11"	2A510	STR												
	1	5	6'- 5"	2A511	STR												
	4	5	5'- 4"	2A512	STR												
	4	5	7'- 4"	2A513	19		3'- 3"	4'- 1"	0'- 0"				1'- 4"		2'- 11"		7'- 0"
	1	5	6'- 1"	2A514	STR												
	1	5	7'- 7"	2A515	STR												
	1	5	3'- 8"	2A516	STR												
	1	5	5'- 2"	2A517	STR												
	4	5	3'- 5"	2A518	STR												
	4	5	11'- 8"	2A519	19		3'- 3"	8'- 5"	0'- 0"				1'- 3"		3'- 0"		11'- 5"
	25	5	17'- 1"	2A520	STR												
	11	5	17'- 11"	2A521	STR												
	25	5	3'- 3"	2A522	STR												
	8	5	4'- 0"	2A523	STR												
	8	5	4'- 5"	2A524	19		1'- 9"	2'- 8"	0'- 0"				1'- 3"		1'- 3"		
	25	5	4'- 3"	2A525	STR												
✳	104	7	8'- 10"	2A700	STR												
	14	8	15'- 2"	2A800	STR												
	14	8	17'- 11"	2A801	STR												
	PIER																
			~~8'-6"~~ 7'-6"														
	80	5	~~8'- 4"~~	P500	17		2'- 5"	2'- 8"	2'- 5"								
	60	5	~~7'- 4"~~ 8'-0"	P501	17		2'- 5"	3'- 2"	2'- 5"								
	APPROACH SLAB																
	42	5	22'- 0"	AS500	STR												
	42	5	20'- 1"	AS501	STR												
	3	5	19'- 9"	AS502	STR												
✳	21	5	5'- 5"	AS503	STR												
	42	5	2'- 4"	AS504	2	0'- 10"	1'- 6"					0'- 0"					
	14	5	19'- 6"	AS505	STR												
	84	5	1'- 8"	AS506	2	0'- 10"	0'- 10"					0'- 0"					
	84	5	1'- 1"	AS507	1	0'- 7"	0'- 6"					0'- 0"					
	24	5	6'- 3"	AS508	1	0'- 7"	5'- 1"					0'- 7"					
	42	5	5'- 7"	AS509	1	0'- 7"	5'- 0"					0'- 0"					
	88	9	20'- 11"	AS900	1	1'- 3"	19'- 8"					0'- 0"					
✳	4	9	19'- 9"	AS901	STR												
	42	5	20'- 1"	AS501	STR												
	21	5	5'- 5"	AS503	STR												
	42	5	2'- 4"	AS504	2	0'- 10"	1'- 6"					0'- 0"					
	84	5	1'- 8"	AS506	2	0'- 10"	0'- 10"					0'- 0"					
	84	5	1'- 1"	AS507	1	0'- 7"	0'- 6"					0'- 0"					
	84	5	1'- 1"	AS507	1	0'- 7"	0'- 6"					0'- 0"					
	24	5	6'- 3"	AS508	1	0'- 7"	5'- 1"					0'- 7"					
	42	5	5'- 7"	AS509	1	0'- 7"	5'- 0"					0'- 0"					
	88	9	20'- 11"	AS900	1	1'- 3"	19'- 8"					0'- 0"					
✳	4	9	19'- 9"	AS901	STR												

~ NOTES ~

1. UNLESS OTHERWISE DESIGNATED, ALL BAR REINFORCEMENT FOR CONCRETE IN SIZES UP TO AND INCLUDING NO. 18 SHALL CONFORM TO THE REQUIREMENTS OF THE "SPECIFICATIONS FOR DEFORMED BILLET-STEEL BARS FOR CONCRETE REINFORCEMENT", AASHTO M 31 (ASTM A 615-SI). ALL BARS SHALL BE GRADE 60, UNLESS OTHERWISE DESIGNATED.
2. FOR TYPICAL BENDING DETAILS, RECOMMENDED PIN DIAMETER "D" OF BENDS AND HOOKS, AND OTHER STANDARD PRACTICE, SEE CURRENT CONCRETE REINFORCING STEEL INSTITUTE "MANUAL OF STANDARD PRACTICE".
3. BARS WHICH REQUIRE MORE ACCURATE BENDING THAN STANDARD PRACTICES SHOULD HAVE LIMITS INDICATED.
4. ALL DIMENSIONS ARE OUT TO OUT OF BAR EXCEPT "A" AND "G" ON STANDARD 180 DEGREE AND 135 DEGREE HOOKS.
5. "J" DIMENSION ON 180 DEGREE HOOKS TO BE SHOWN ONLY WHERE NECESSARY TO RESTRICT HOOK SIZE. OTHERWISE, STANDARD HOOKS ARE TO BE USED.
6. "H" DIMENSION ON STIRRUPS TO BE SHOWN ONLY WHEN NECESSARY TO MAINTAIN CLEARANCES.
7. WHERE SLOPE DIFFERS FROM 45 DEGREES, DIMENSIONS "H" AND "K" MUST BE SHOWN.
8. ▲ DENOTES BARS TO BE CUT IN FIELD.
9. ✳ DENOTES ONE EXTRA BAR ADDED FOR TESTING PURPOSES.
10. △ DENOTES TWO EXTRA BARS ADDED FOR TESTING PURPOSES.
11. DECK, ABUTMENT, AND PIER REINFORCEMENT SHALL BE LEVEL II. APPROACH SLAB REINFORCEMENT SHALL BE LEVEL I.

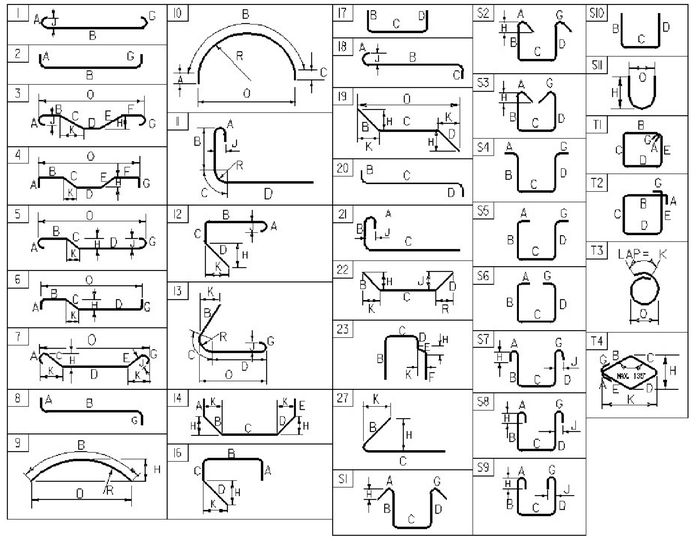

ASTM STANDARD REINFORCING BARS

BAR SIZE DESIGNATION	WEIGHT POUNDS PER FOOT	NOMINAL DIMENSIONS ROUND SECTION		
		DIAMETER INCHES	AREA INCHES ^{2}	PERIMETER INCHES
#3	0.376	0.375	0.11	1.178
#4	0.668	0.500	0.20	1.571
#5	1.043	0.625	0.31	1.963
#6	1.502	0.750	0.44	2.356
#7	2.044	0.875	0.60	2.749
#8	2.670	1.000	0.79	3.142
#9	3.400	1.128	1.00	3.544
#10	4.303	1.270	1.27	3.990
#11	5.313	1.410	1.56	4.430
#14	7.65	1.693	2.25	5.32
#18	13.60	2.257	4.00	7.09

PROJECT NAME: **BENNINGTON**
PROJECT NUMBER: **BRF 1000(16)**

FILE NAME: **z88j08rss.xls**
PROJECT MANAGER: **R. HEBERT**
DESIGNED BY: **D. MYERS**
REINFORCING STEEL SCHEDULE

PLOT DATE: **5/9/2014**
DRAWN BY: **T. POULIN**
CHECKED BY: **R. HEBERT**
SHEET **55** OF **75**

EROSION CONTROL NARRATIVE

1.1 PROJECT DESCRIPTION

THIS PROJECT INVOLVES THE REPLACEMENT OF BRIDGE #57 ON BENMONT AVENUE SPANNING 268 FEET OVER THE BODY OF WATER KNOWN AS ROARING BRANCH IN THE TOWN OF BENNINGTON. THE PROJECT BEGINS AT A POINT APPROXIMATELY 0.08 MILES NORTH OF HUNT STREET AND EXTENDS NORTHERLY FOR 0.06 MILES. WORK WILL INVOLVE REMOVAL OF EXISTING SUPERSTRUCTURE, PARTIAL REMOVAL OF EXISTING ABUTMENTS, CONSTRUCTION OF NEW ABUTMENTS AND CONSTRUCTION OF THE BRIDGE SUPERSTRUCTURE ON THE EXISTING ALIGNMENT. ALSO INCLUDED WILL BE RELATED CHANNEL, PIER REPAIR AND APPROACH WORK.

NOTE: AREA OF DISTURBANCE INCLUDES LIMITS OF EARTH DISTURBANCE WITHIN THE PROJECT AREA AS SHOWN ON THE ATTACHED EPSC PLAN. THE AREA OF DISTURBANCE DOES NOT INCLUDE WASTE, BORROW AND STAGING AREAS. THE CONTRACTOR IS RESPONSIBLE FOR SUBMITTING THE LOCATION OF THE WASTE, BORROW AND STAGING AREAS, AS WELL AS THE MATERIAL STOCKPILE, REFUELING AND MAINTENANCE AREAS. A MAP SHALL BE ATTACHED IF NECESSARY.

TOTAL AREA OF DISTURBANCE IS APPROXIMATELY 28,970 SQUARE FEET (0.67 ACRES).

IT IS ANTICIPATED THAT THE PROJECT WILL LAST TWO CONSTRUCTION SEASONS.

1.2 SITE INVENTORY

1.2.1 TOPOGRAPHY, EXISTING ROADS, UTILITIES

THE TOPOGRAPHY SURROUNDING THE PROJECT SITE IS MOSTLY FLAT AND CONSISTS MOSTLY OF LIGHTY WOODED AREAS AND COMMERCIAL PROPERTIES WITH PAVED SURFACES AND WELL ESTABLISHED LAWNS. PORTIONS NEAR THE WATER BODY INCLUDE LIGHTLY WOODED AREAS WITH SHALLOW SLOPES. THE GENERAL TOPOGRAPHY OF THE AREA SLOPES FROM THE EAST TO THE WEST. ALL ROAD SURFACES IN THE PROJECT AREA ARE BITUMINOUS CONCRETE PAVEMENT. COMMERCIAL DEVELOPED PROPERTIES BORDER THE BRIDGE IN ALL 4 APPROACH CORNERS.

THERE ARE OVERHEAD ELECTRICAL LINES ALONG THE SOUTH APPROACH AND OVERHEAD ELECTRICAL & CABLE LINES AT THE NORTH APPROACH. BURIED FIBER OPTIC LINES EXIST THROUGHOUT THE PROJECT AND ARE SUPPORTED BY THE EXISTING BRIDGE. THERE IS BURIED SEWER WEST OF THE EXISTING BRIDGE THAT RUNS BENEATH ROARING BRANCH NEAR THE MOUTH OF THE WALLOOMSAC RIVER. THERE IS ALSO A WATER LINE ON THE SOUTH WEST SIDE OF THE PROJECT THAT SERVICES A COMMERCIAL PROPERTY.

1.2.2 DRAINAGE, WATERWAYS, BODIES OF WATER, AND PROXIMITY TO NATURAL OR MAN-MADE WATER FEATURES

THE BRIDGE SPANS THE BODY OF WATER KNOWN AS ROARING BRANCH. THE STREAM IS CLASSIFIED AS SINUOUS AND IN THE REACH INFLUENCED BY THE BRIDGE IS CHANNELIZED AND STRAIGHT, BOUNDARIES ARE ALLUVIAL, AND STREAM BANKS ARE HIGH WITH LITTLE TO NO FLOOD PLAIN. THE STREAM BED CONSISTS OF COARSE SAND, GRAVEL AND COBBLE. THE TRIBUTARY AREA AT THE BRIDGE IS 41.4 SQUARE MILES. CONSTRUCTION OF THE NEW BRIDGE WILL REQUIRE SOME TEMPORARY AND PERMANENT IMPACTS TO ROARING BRANCH. THE PROJECT IS ALSO ADJACENT TO THE WALLOOMSAC RIVER. THE WALLOOMSAC RIVER IS APPROXIMATELY 42 FEET FROM THE NEAREST LOCATION WHERE THE PROJECT IS ANTICIPATED TO DISTURB EXISTING SOILS.

THE FOLLOWING DESCRIPTIONS ARE FOR THE EXISTING SITE PLANS: SURFACE DRAINAGE FROM BENMONT AVENUE FLOWS DOWN EXISTING VEGETATED AND WOODED SIDESLOPES AND INTO ROARING BRANCH.

1.2.3 VEGETATION

THE VEGETATION IN THE PROJECT AREA CONSISTS OF WELL ESTABLISHED LAWNS AND LIGHTLY WOODED AREAS. THE IMPACT TO VEGETATION WILL BE LIMITED TO THAT WHICH IS REQUIRED FOR REPLACEMENT OF THE EXISTING BRIDGE AND TEMPORARY ACCESS TO THE EXISTING PIERS. DISTURBED VEGETATION WILL BE REESTABLISHED WITH STANDARD SEED AND MULCH PRACTICES OR REPLACED WITH STONE FILL.

1.2.4 SOILS

SOIL DATA CAME FROM THE U.S. DEPARTMENT OF AGRICULTURE NATURAL RESOURCES CONSERVATION SERVICE FOR THE COUNTY OF BENNINGTON, VERMONT. SOILS ON THE PROJECT SITE ARE:

ON THE SOUTH SIDE OF ROARING BRANCH THE SOIL TYPE IS UDIPSAMMENTS, 0 TO 3 PERCENT SLOPE, “K FACTOR” = 0.10. THE EROSION HAZARD IS “LOW” DUE TO ITS K FACTOR.

ON THE NORTH SIDE OF ROARING BRANCH THE SOIL TYPE IS POOTATUCK, FINE SANDY LOAM, GENTLY SLOPING, “K FACTOR” = 0.20. THE EROSION HAZARD IS “SLIGHT” DUE TO ITS K FACTOR.

1.2.4 SENSITIVE RESOURCE AREAS

CRITICAL HABITATS: NO
HISTORICAL OR ARCHAEOLOGICAL AREAS: NO
PRIME AGRICULTURE LAND: NO
THREATENED AND ENDANGERED SPECIES: NO
WATER RESOURCE: ROARING BRANCH AND WALLOOMSAC RIVER
WETLANDS: NO

1.3 RISK EVALUATION

THE PROJECT DOES NOT FALL UNDER THE JURISDICTION OF GENERAL PERMIT 3-9020 FOR STORMWATER RUNOFF FROM CONSTRUCTION SITES. SHOULD CHANGES PRIOR TO OR DURING CONSTRUCTION RESULT IN ONE OR MORE ACRES OF EARTH DISTURBANCE OR SHOULD THE PROJECT BECOME PART OF A LARGER PLAN OF DEVELOPMENT, THE CONTRACTOR WILL BE RESPONSIBLE FOR ANY ADDITIONAL PERMITTING.

1.4 EROSION PREVENTION AND SEDIMENT CONTROL

THE EROSION CONTROL PLANS ARE MEANT AS A GUIDELINE FOR PREVENTING EROSION AND CONTROLLING SEDIMENT TRANSPORT. THE PRINCIPLES OUTLINED IN THIS NARRATIVE CONSIST OF APPLYING MEASURES THROUGHOUT THE LIFE OF THE PROJECT TO AVOID SEDIMENT TRANSPORT TO THE RECEIVING WATERS. THE MEASURES INCLUDE STABILIZATION AND STRUCTURAL PRACTICES, STORM WATER CONTROLS AND OTHER POLLUTION PREVENTION PRACTICES. THEY HAVE BEEN PROPOSED BY THE DESIGNER AS A BASIS FOR PROTECTING RESOURCES AND WILL NEED TO BE BUILT UPON BASED ON THE SPECIFIC MEANS AND METHODS OF THE CONTRACTOR. REFER TO THE LOW RISK SITE HANDBOOK AND APPROPRIATE DETAIL SHEETS FOR SPECIFIC GUIDANCE AND CONSTRUCTION DETAILING.

ALL MEASURES SHALL BE REGULARLY MAINTAINED AND SHALL BE CHECKED FOR SEDIMENT BUILD-UP. SEDIMENT SHALL BE DISPOSED AT AN APPROVED SITE WHERE IT WILL NOT BE SUBJECT TO EROSION.

1.4.1 MARK SITE BOUNDARIES

SITE BOUNDARIES AND AREAS CONSTRUCTION EQUIPMENT CAN ACCESS SHALL BE DELINEATED.

PROJECT DEMARCATION FENCING SHALL BE USED TO PHYSICALLY MARK SITE BOUNDARIES.

1.4.2 LIMIT DISTURBANCE AREA

PREVENTING INITIAL SOIL EROSION BY MINIMIZING THE EXPOSED AREA IS MUCH MORE EFFECTIVE THAN TREATING ERODED SEDIMENT. EARTH DISTURBANCE CAN BE MINIMIZED THROUGH CONSTRUCTION PHASING BY ONLY OPENING UP EARTH AS NECESSARY. THIS CAN LIMIT THE AREA THAT WILL BE DISTURBED AND EXPOSED TO EROSION. EMPLOY TEMPORARY CONSTRUCTION STABILIZATION PRACTICES IN INCREMENTAL STAGES AS PHASES CHANGE. FOR PROJECTS WHICH FALL UNDER THE CONSTRUCTION GENERAL PERMIT, ONLY THE ACREAGE LISTED ON THE PERMIT AUTHORIZATION MAY BE EXPOSED AT ANY GIVEN TIME.

MAINTAINING VEGETATED BUFFERS ALONG STREAM BANKS, WETLANDS OR OTHER SENSITIVE AREAS IS A CRUCIAL EROSION AND SEDIMENT CONTROL MEASURE THAT SHOULD BE ESTABLISHED WHEREVER POSSIBLE.

1.4.3 SITE ENTRANCE/EXIT STABILIZATION

TRACKING OF SEDIMENT ONTO PUBLIC HIGHWAYS SHALL BE MINIMIZED TO REDUCE THE POTENTIAL FOR RUNOFF ENTERING RECEIVING WATERS. INSTALLATION SHALL COINCIDE WITH THE CONTRACTOR’S PROGRESS SCHEDULE. STABILIZED CONSTRUCTION ENTRANCES SHALL BE INSTALLED AS PROPOSED ON THE EPSC PLAN AND ANYWHERE EQUIPMENT WILL BE GOING FROM AREAS OF EXPOSED SOILS TO PAVED SURFACES.

1.4.4 INSTALL SEDIMENT BARRIERS

SEDIMENT BARRIERS SHALL BE UTILIZED TO INTERCEPT RUNOFF AND ALLOW SUSPENDED SEDIMENT TO SETTLE OUT. THEY SHOULD BE INSTALLED PRIOR TO ANY UPSLOPE WORK.

SILT FENCE WILL BE INSTALLED AS PROPOSED ON THE EPSC PLAN.

1.4.5 DIVERT UPLAND RUNOFF

DIVERSIONARY MEASURES SHALL BE USED TO INTERCEPT RUNOFF FROM ABOVE THE CONSTRUCTION AND DIRECT IT AROUND THE DISTURBED AREA SO THAT CLEAN WATER DOES NOT BECOME MUDDIED WHILE TRAVELING OVER EXPOSED SOILS ON THE CONSTRUCTION SITE.

DIVERSION OF UPLAND RUNOFF NOT ANTICIPATED.

1.4.6 SLOW DOWN CHANNELIZED RUNOFF

CHECK STRUCTURES SHALL BE UTILIZED TO REDUCE THE VELOCITY, AND THUS THE EROSIVE POTENTIAL, OF CONCENTRATED FLOW IN CHANNELS.

THE USE OF STONE CHECK DAMS IS NOT ANTICPATED FOR THIS PROJECT.

1.4.7 CONSTRUCT PERMANENT CONTROLS

PERMANENT STORMWATER TREATMENT DEVICES SHALL BE INSTALLED AS SHOWN ON THE PLANS.

SEED AND MULCH WILL BE USED AS PERMANENT CONTROLS TO STABILIZE EXPOSED SOIL. RIPRAP AND STONE FILL WILL BE USED TO STABILIZE THE SLOPES AND STREAMBED AROUND PIERS AND ABUTMENTS.

1.4.8 STABILIZE EXPOSED SOILS DURING CONSTRUCTION

ALL AREAS OF DISTURBANCE MUST HAVE TEMPORARY STABILIZATION IN PLACE WITHIN 48 HOURS OF DISTURBANCE.

SURFACE ROUGHENING OF ALL EXPOSED SLOPES, COMBINED WITH TEMPORARY MULCHING, SHALL BE UTILIZED ON A REGULAR BASIS. BIODEGRADABLE EROSION CONTROL MATTING OR AN EQUIVALENT SHALL BE USED TO STABILIZE ALL SLOPES STEEPER THAN 1:3.

THE FORECAST OF RAINFALL EVENTS SHALL TRIGGER IMMEDIATE PROTECTION OF EXPOSED SOILS.

1.4.9 WINTER STABILIZATION

VARIOUS MEASURES SPECIFIC TO WINTER MAY BE NECESSARY SHOULD THE PROJECT EXTEND INTO WINTER (OCTOBER 15 THROUGH APRIL 15). REFER TO THE LOW RISK SITE HANDBOOK FOR GUIDANCE.

SHOULD EARTH DISTURBANCE NEED TO BE PERFORMED DURING THE WINTER, A WINTER EROSION AND SEDIMENT CONTROL PLAN DESCRIBING ALTERNATIVE STABILIZATION METHODS SHALL BE SUBMITTED TO THE ENGINEER PRIOR TO AUGUST 15 FOR APPROVAL.

1.4.10 STABILIZE SOIL AT FINAL GRADE

EXPOSED SOIL MUST BE STABILIZED WITHIN 48 HOURS OF REACHING FINAL GRADE.

SEED, MULCH, FERTILIZER, AND LIME SHALL BE USED TO ESTABLISH PERMANENT VEGETATION. FOR SLOPES STEEPER THAN 1:3, BIODEGRADABLE EROSION CONTROL MATTING OR AN EQUIVALENT SHALL BE USED INSTEAD OF MULCH.

1.4.11 DE-WATERING ACTIVITIES

DISCHARGE FROM DEWATERING ACTIVITIES THAT FLOWS OFF OF THE CONSTRUCTION SITE MUST NOT CAUSE OR CONTRIBUTE TO A VIOLATION OF THE VERMONT WATER QUALITY STANDARDS.

TREATMENT OF DEWATERING COFFERDAM IS ANTICIPATED. A LOCATION FOR THE TREATMENT HAS BEEN PROPOSED AND IS SHOWN ON THE PLANS. THE SPECIFIC MEANS FOR TREATMENT OF DISCHARGE SHALL BE PROVIDED BY THE CONTRACTOR. PAYMENT FOR TREATMENT OF DISCHARGE WILL BE PAID FOR UNDER CONTRACT ITEM 653.45.

1.4.12 INSPECT YOUR SITE

INSPECT THE PROJECT SITE BASED ON SPECIAL PROVISION REQUIREMENTS.

1.5 SEQUENCE AND STAGING

THIS SECTION WILL BE DEVELOPED BY THE CONTRACTOR USING THE GUIDANCE OUTLINED IN THE VTRANS EPSC PLAN CONTRACTOR CHECKLIST.

1.5.2 OFF-SITE ACTIVITIES

IN ADDITION TO THE CONTRACTOR CHECKLIST ANY ACTIVITIES OUTSIDE THE CONSTRUCTION LIMITS SHALL FOLLOW SUBSECTIONS 105.25- 105.29 OF THE STANDARD SPECIFICATIONS FOR CONSTRUCTION.

PROJECT NAME:	BENNINGTON
PROJECT NUMBER:	BRF 1000(16)
FILE NAME: z881087bdr_epscn.dgn	PLOT DATE: 8/7/2014
PROJECT LEADER: R. HEBERT	DRAWN BY: S. AMOROSO
DESIGNED BY: S. AMOROSO	CHECKED BY: D. BRYANT
EPSC NARRATIVE	SHEET 56 OF 75

VT STATE PLANE GRID

N

SOIL CLASSIFICATION

STOCKBRIDGE LOAM
8 TO 15% SLOPES
"K FACTOR" 0.28
MEDIUM ERODIBILITY

SOIL CLASSIFICATION

UDIPSAMMENTS AND UDORTHENTS
GENTLY SLOPING
"K FACTOR" 0.10
LOW ERODIBILITY

ROARING BRANCH

HUNT STREET

WALLOOMSAC RIVER

CHANNEL LINE

51+50

51+00

N76°23'45.23"W

STA. 7+07.12
END APPROACH
BEGIN PROJECT
BRF 1000(16)

STA. 9+96.28
END BRIDGE

KFC / TACO BELL

ENTERPRISE

CONC. PAD

STA. 6+34.10
BEGIN APPROACH
MATCH EXISTING PAVEMENT

BENMONT AVENUE
STA. 10+95.00
END APPROACH
MATCH EXISTING PAVEMENT

AER E

EXISTING SIDEWALK (BITUMINOUS)

GRASS

EXISTING SIDEWALK (CONCRETE)

GRASS

TO BENNINGTON

℄ PROPOSED BENMONT AVE

TO NORTH BENNINGTON

6+00 7+00 8+00 50+00 9+00 10+00 11+00

AER E & CABLE

JOHNSON'S FUELS SERVICE STATION

STA. 7+27.12
BEGIN BRIDGE

N81°47'46.31"W

49+00

SOIL CLASSIFICATION
BOUNDARY

STA. 10+16.32
END PROJECT
BRF 1000(16)
BEGIN APPROACH

EXISTING ROW (TYP)

PROPOSED BENMONT AVE.
STA 8+60.17 =
CHANNEL
STA 50+00.00

GARDINER AUTO SALES

SOIL CLASSIFICATION

POOTATUCK FINE SANDY LOAM
0 TO 3% SLOPES
"K FACTOR" 0.20
MEDIUM ERODIBILITY

SOIL CLASSIFICATION

OCCUM FINE SANDY LOAM
0 TO 3% SLOPES
"K FACTOR" 0.20
MEDIUM ERODIBILITY

SOIL CLASSIFICATION

POOTATUCK FINE SANDY LOAM
0 TO 3% SLOPES
"K FACTOR" 0.20
MEDIUM ERODIBILITY

SCALE: 1"=20'-0"
20 0 20

PROJECT NAME: BENNINGTON
PROJECT NUMBER: BRF 1000(16)

FILE NAME: z88J087bdr_eroE.dgn
PROJECT LEADER: R. HEBERT
DESIGNED BY: J. DAVIS
EPSC EXISTING CONDITIONS SITE PLAN

PLOT DATE: 8/27/2014
DRAWN BY: J. DAVIS
CHECKED BY: D. BRYANT
SHEET 57 OF 75

WITH PERMISSION & APPROVAL
ACCESS DRIVES WENT
OFF THE ROW

VT STATE PLANE GRID

N

HUNT STREET

ENTERPRISE

STA. 7+07.12
END APPROACH
BEGIN PROJECT
BRF 1000(16)

WALLOOMSAC RIVER

ROARING BRANCH

CHANNEL LINE

51+50

51+00

CONC. PAD

STA. 6+34.10
BEGIN APPROACH
MATCH EXISTING
PAVEMENT

RIPRAP, HEAVY TYPE

STA. 9+96.28
END BRIDGE

COFFERDAM
(SEE NOTE 1)

TEMP. ACCESS
DRIVE

KFC / TACO BELL

PROPOSED SEDIMENTATION
DEWATERING LOCATION
(CONTRACTOR TO PROVIDE
DETAILS AND METHODOLOGY
WITH COFFERDAM DESIGN,
SEE EROSION AND SEDIMENT
CONTROL NOTE 1.4.11)

BENMONT AVENUE
STA. 10+95.00
END APPROACH
MATCH EXISTING
PAVEMENT

AER E
EXISTING SIDEWALK (BITUMINOUS)

GRASS

EXISTING SIDEWALK (CONCRETE)

GRASS

TO BENNINGTON

TO NORTH
BENNINGTON

℄ PROPOSED BENMONT AVE

6+00
7+00
8+00
9+00
10+00
11+00

PDF

TEMP. ACCESS DRIVE

STA. 7+27.12
BEGIN BRIDGE

JOHNSON'S FUELS
SERVICE STATION

COFFERDAM
(SEE NOTE 1)

TEMPORARY CONSTRUCTION
LIMITS (TYP.)

49+00

PROPOSED BENMONT AVE.
STA 8+60.17 =
CHANNEL
STA 50+00.00

TEMP. ACCESS DRIVE

NOT USED
THIS SIDE

CONSTRUCTION ENTRANCE(S) SHALL
BE COORDINATED WITH PHASING (TYP)

STA. 10+16.32
END PROJECT
BRF 1000(16)
BEGIN APPROACH

EXISTING
ROW (TYP.)

GARDINER
AUTO SALES

LEGEND:

- AREA OF TEMPORARY IMPACT BELOW OHW (STONE PAD) (SEE NOTES 1 AND 4) (TOTAL AREA = 7648 S.F.)
- PERMENANT IMPACTS BELOW OHW (TOTAL AREA = 3015 S.F.)
- AREA OF EARTH DISTURBANCE ABOVE OHW (TOTAL AREA = 12235 S.F.)
- COFFERDAM (SEE NOTES)
- STABILIZED CONSTRUCTION ENTRANCE (USED IN PHASE 1 ONLY)
- TEMPORARY CONSTRUCTION LIMITS
- CURB INLET PROTECTION
- SURFACE ROUGHENING
- FILTER BAG

NOTES:

1. COFFERDAM AND ACCESS STONE PAD SHALL ONLY BE USED ON ONE SIDE OF THE RIVER AT A TIME.
2. TEMPORARY EROSION MATTING TO BE USED ON SLOPES STEEPER THAN 3:1.
3. COUNTOURS REFLECT CONDITIONS PRIOR TO TROPICAL STORM IRENE, AUGUST 2011.
4. THE MAXIMUM ELEVATION OF ANY TEMPORARY ACCESS STONE PAD SHALL BE RESTRICTED TO 1' BELOW OHW ELEVATION.
5. ORDINARY HIGH WATER ELEVATION = 614.7.

SCALE: 1"=20'-0"
20 0 20

PROJECT NAME: BENNINGTON
PROJECT NUMBER: BRF 1000(16)

FILE NAME: z88J087bdr_eroC.dgn
PROJECT LEADER: R. HEBERT
DESIGNED BY: J. DAVIS
EPSC SITE PLAN

PLOT DATE: 8/7/2014
DRAWN BY: J. DAVIS
CHECKED BY: D. BRYANT
SHEET 58 OF 75

VT STATE PLANE GRID

N

ROARING BRANCH

HUNT STREET

WALLOOMSAC RIVER

CHANNEL LINE

51+50

51+00

STA. 7+07.12
END APPROACH
BEGIN PROJECT
BRF 1000(16)

STA. 9+96.28
END BRIDGE

BENMONT AVENUE
STA. 10+95.00
END APPROACH
MATCH EXISTING PAVEMENT

STA. 6+34.10
BEGIN APPROACH
MATCH EXISTING PAVEMENT

STONE FILL, TYPE I (TYP.)

CONC. PAD

ENTERPRISE

KFC / TACO BE

EXISTING SIDEWALK (BITUMINOUS)

EXISTING SIDEWALK (CONCRETE)

GRASS

TO BENNINGTON

TO NORTH BENNINGTON

℄ PROPOSED BENMONT AVE

6+00

7+00

8+00

50+00

9+00

10+00

11+00

R=16'

JOHNSON'S FUELS SERVICE STATION

STA. 7+27.12
BEGIN BRIDGE

RIPRAP, HEAVY TYPE (TYP)

49+00

PROPOSED BENMONT AVE.
STA 8+60.17 = CHANNEL
STA 50+00.00

STA. 10+16.32
END PROJECT
BRF 1000(16)
BEGIN APPROACH

EXISTING ROW (TYP.)

GARDINER AUTO SALES

AER E & CABLE

FUEL TANK

LEGEND:

RIPRAP, HEAVY TYPE

STONE FILL, TYPE I

SCALE: 1"=20'-0"

20 0 20

NOTES:

1. CONTOURS SHOWN REFLECT EXISTING CONDITIONS PRIOR TO TROPICAL STORM IRENE, AUGUST 2011. FINAL CONTOURS WILL BE SIMILAR. SEE BENMONT AVE. CROSS SECTION SHEETS FOR FINAL GRADES.

2. ORDINARY HIGH WATER ELEVATION = 614.7.

3. TEMPORARY EROSION MATTING TO BE PLACED ON SLOPES STEEPER THAN 3:1.

PROJECT NAME: BENNINGTON
PROJECT NUMBER: BRF 1000(16)

FILE NAME: z881087bdr_eroF.dgn
PROJECT LEADER: R. HEBERT
DESIGNED BY: J. DAVIS
EPSC FINAL CONDITIONS SITE PLAN

PLOT DATE: 8/7/2014
DRAWN BY: J. DAVIS
CHECKED BY: D. BRYANT
SHEET 59 OF 75

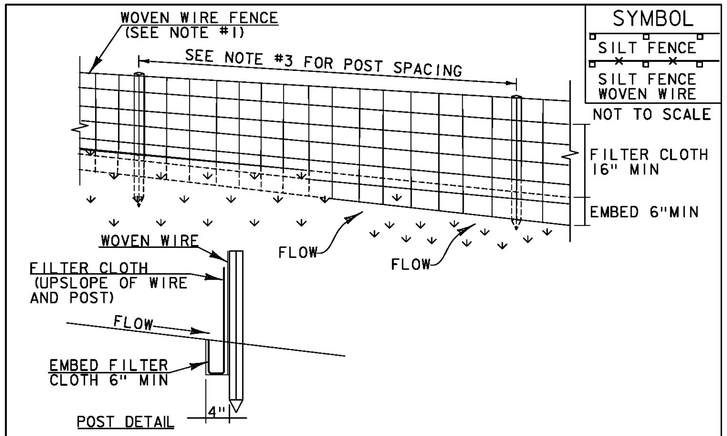

CONSTRUCTION SPECIFICATIONS

1. WOVEN WIRE REINFORCED FENCE IS REQUIRED WITHIN 100' UPSLOPE OF RECEIVING WATERS WHEN THE PROJECT FALLS UNDER A CONSTRUCTION STORMWATER PERMIT. WOVEN WIRE SHALL BE A MIN. 14 GAUGE WITH A 6" MAX. MESH OPENING.
2. FILTER CLOTH SHALL BE EITHER FILTER X, MIRAFI100X, STABILINKA T140N OR APPROVED EQUIVALENT.
3. POST SPACING FOR WIRE-BACKED FENCE SHALL BE 10' MAXIMUM. FOR FILTER-CLOTH FENCE, WHEN ELONGATION IS >50%, POST SPACING SHALL NOT EXCEED 4' AND WHEN ELONGATION IS <50%, POST SPACING SHALL NOT EXCEED 6'.
4. WOVEN WIRE FENCE IS TO BE FASTENED SECURELY TO FENCE POSTS WITH WIRE TIES. FILTER CLOTH IS TO BE FASTENED SECURELY TO WOVEN WIRE FENCE WITH TIES SPACED EVERY 24" AT TOP AND MID SECTION.
5. WHEN TWO SECTIONS OF FILTER CLOTH ADJOIN EACH OTHER THEY SHALL BE OVER-LAPPED BY 6" AND FOLDED.
6. MAINTENANCE SHALL BE PERFORMED AS NEEDED AND MATERIAL REMOVED WHEN SEDIMENT REACHES HALF OF FABRIC HEIGHT.

ADAPTED FROM DETAILS PROVIDED BY: NEW YORK STATE DEC ORIGINALLY DEVELOPED BY USDA-NRCS VERMONT DEPARTMENT OF ENVIRONMENTAL CONSERVATION	SILT FENCE

NOTES:
REFER TO "THE VERMONT STANDARDS & SPECIFICATIONS FOR EROSION PREVENTION & SEDIMENT CONTROL -2006- "FROM THE VT AGENCY OF NATURAL RESOURCES FOR ADDITIONAL GUIDANCE.

THIS WORK SHALL BE PERFORMED IN ACCORDANCE WITH SECTION 649 AND AS SHOWN IN THE PLANS FOR GEOTEXTILE FOR SILT FENCE (PAY ITEM 649.51) ~~OR GEOTEXTILE FOR SILT FENCE, WOVEN WIRE REINFORCED (PAY ITEM 649.515).~~

REVISIONS	
MARCH 21, 2008	WHF
DECEMBER 11, 2008	WHF
JANUARY 13, 2009	WHF

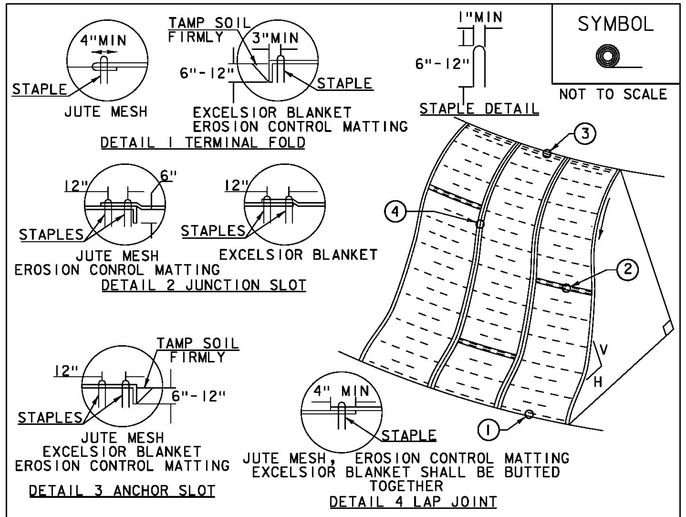

CONSTRUCTION SPECIFICATIONS

1. APPLY TO SLOPES GREATER THAN 3H:1V OR WHERE NECESSARY TO AID IN ESTABLISHING VEGETATION.
2. APPLY FERTILIZER, LIME SEED PRIOR TO PLACING MATTING.
3. STAPLES ARE TO BE PLACED ALTERNATELY, IN COLUMNS APPROXIMATELY 2' APART AND IN ROWS APPROXIMATELY 3' APART. APPROXIMATELY 175 STAPLES ARE REQUIRED PER 4'X225' ROLL OF MATERIAL AND 125 STAPLES ARE REQUIRED PER 4'X150' ROLL OF MATERIAL.
4. DISTURBED AREAS SHALL BE SMOOTHLY GRADED. EROSION CONTROL MATERIAL SHALL BE PLACED LOOSELY OVER GROUND SURFACE. DO NOT STRETCH.
5. ALL TERMINAL ENDS AND TRANSVERSE LAPS SHALL BE STAPLED AT APPROXIMATELY 12" INTERVALS.

ADAPTED FROM DETAILS PROVIDED BY: NEW YORK STATE DEC ORIGINALLY DEVELOPED BY USDA-NRCS VERMONT DEPARTMENT OF ENVIRONMENTAL CONSERVATION	ROLLED EROSION CONTROL PRODUCT (RECP) SIDE SLOPE

NOTES:
REFER TO "THE VERMONT STANDARDS & SPECIFICATIONS FOR EROSION PREVENTION & SEDIMENT CONTROL -2006- "FROM THE VT AGENCY OF NATURAL RESOURCES FOR ADDITIONAL GUIDANCE.
THIS WORK SHALL BE PERFORMED IN ACCORDANCE WITH SECTION 653 AND AS SHOWN IN THE PLANS FOR TEMPORARY EROSION MATTING (PAY ITEM 653.20) ~~OR PERMANENT EROSION MATTING (PAY ITEM 653.21).~~

REVISIONS	
APRIL 16, 2007	JMF
JANUARY 13, 2009	WHF

PROJECT NAME:	BENNINGTON
PROJECT NUMBER:	BRF 1000(16)
FILE NAME: z88J087bdr_erodet.dgn	PLOT DATE: 8/7/2014
PROJECT LEADER: R. HEBERT	DRAWN BY: D. BRYANT
DESIGNED BY: D. BRYANT	CHECKED BY: D. BURHANS
EPSC DETAIL SHEET 1 OF 4	SHEET 60 OF 75

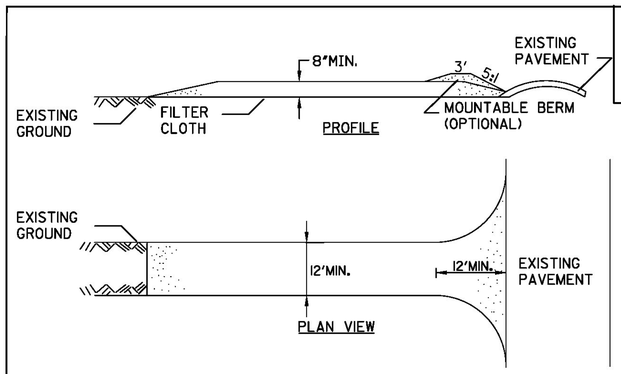

CONSTRUCTION SPECIFICATIONS

1. STONE SIZE - USE 1-4" STONE, OR RECLAIMED OR RECYCLED CONCRETE EQUIVALENT.
2. LENGTH - NOT LESS THAN 50 FEET (EXCEPT ON A SINGLE RESIDENCE LOT WHERE A 30 FOOT MINIMUM LENGTH APPLIES).
3. THICKNESS - NOT LESS THAN EIGHT (8) INCHES.
4. WIDTH - TWELVE (12) FOOT MINIMUM, BUT NOT LESS THAN THE FULL WIDTH AT POINTS WHERE INGRESS OR EGRESS OCCURS. TWENTY-FOUR (24) FOOT IF SINGLE ENTRANCE TO SITE.
5. GEOTEXTILE MUST BE PLACED OVER THE ENTIRE AREA PRIOR TO PLACING STONE.
6. SURFACE WATER - ALL SURFACE WATER FLOWING OR DIVERTED TOWARD CONSTRUCTION ENTRANCES SHALL BE PIPED BENEATH THE ENTRANCE. IF PIPING IS IMPRACTICAL, A MOUNTABLE BERM WITH 5:1 SLOPES WILL BE PERMITTED.
7. MAINTENANCE - THE ENTRANCE SHALL BE MAINTAINED IN A CONDITION WHICH WILL PREVENT TRACKING OR FLOWING OF SEDIMENT ONTO PUBLIC RIGHTS-OF-WAY, ALL SEDIMENT SPILLED, DROPPED, WASHED OR TRACKED ONTO PUBLIC RIGHTS-OF-WAY MUST BE REMOVED IMMEDIATELY.
8. WHEN WASHING IS REQUIRED, IT SHALL BE DONE ON AN AREA STABILIZED WITH STONE AND WHICH DRAINS INTO AN APPROVED SEDIMENT TRAPPING DEVICE.
9. PERIODIC INSPECTION AND NEEDED MAINTENANCE SHALL BE PROVIDED ACCORDING TO PERMIT REQUIREMENTS.

ADAPTED FROM DETAILS PROVIDED BY: NEW YORK STATE DEC
ORIGINALLY DEVELOPED BY USDA-NRCS
VERMONT DEPARTMENT OF ENVIRONMENTAL CONSERVATION

STABILIZED CONSTRUCTION ENTRANCE

NOTES:
REFER TO "THE VERMONT STANDARDS & SPECIFICATIONS FOR EROSION PREVENTION & SEDIMENT CONTROL -2006- "FROM THE VT AGENCY OF NATURAL RESOURCES FOR ADDITIONAL GUIDANCE.

THIS ITEM SHALL BE PAID FOR UNDER ITEM
653.35 VEHICLE TRACKING PAD

REVISIONS	
FEBRUARY 9, 2007	WHF
MARCH 8, 2007	JMF

VAOT RURAL AREA MIX

	LBS/AC				
% WEIGHT	BROADCAST	HYDROSEED	NAME	GERM %	PURITY %
37.5%	22.5	45	CREEPING RED FESCUE	85%	98%
37.5%	22.5	45	TALL FESCUE	90%	95%
5.0%	3	6	RED TOP	90%	95%
15.0%	9	18	BIRDSFOOT TREFOIL	85%	98%
5.0%	3	6	ANNUAL RYE GRASS	85%	95%
100%	60	120			

VAOT URBAN AREA MIX

	LBS/AC				
% WEIGHT	BROADCAST	HYDROSEED	NAME	GERM %	PURITY %
42.5%	34	68	CREEPING RED FESCUE	85%	98%
10.0%	8	16	PERENNIAL RYE GRASS	90%	95%
42.5%	34	68	KENTUCKY BLUE GRASS	85%	85%
5.0%	4	8	ANNUAL RYE GRASS	85%	95%
100%	80	160			

SOIL AMENDMENT GUIDANCE

FERTILIZER		LIME	
BROADCAST	HYDROSEED	BROADCAST	HYDROSEED
10-20-10	*FOLLOW*	PELLETIZED	*FOLLOW*
500 LBS/AC	*MANUFACTURER*	2 TONS/AC	*MANUFACTURER*

CONSTRUCTION GUIDANCE

1. RURAL SEED MIX: USE AS INDICATED IN THE PLANS AND/OR FOR ALL ESTABLISHED UPLAND (NON WETLAND) AREAS DISTURBED BY THE CONTRACTOR.
2. URBAN SEED MIX: USE AS INDICATED IN THE PLANS AND/OR FOR ALL ESTABLISHED LAWN AREAS DISTURBED BY THE CONTRACTOR.
3. ALL SEED MIXTURES: SHALL NOT HAVE A WEED CONTENT EXCEEDING 0.40% BY WEIGHT AND SHALL BE FREE OF ALL NOXIOUS SEED.
4. FERTILIZER AND LIMESTONE: SHALL FOLLOW RATES SHOWN ON PLAN OR AS DIRECTED BY THE ENGINEER
5. HAY MULCH: TO BE PLACED ON EARTH SLOPES AT THE RATE OF 2 TONS/ACRE, ACHIEVE 90% GROUND COVER OR AS DIRECTED BY THE ENGINEER.
6. TOPSOIL: TO BE USED WITH SEED AS INDICATED ON THE PLANS, OR AS DIRECTED BY THE ENGINEER.
7. HYDROSEEDING: ALTHOUGH GUIDANCE IS GIVEN ABOVE THE SITE CONDITIONS AND THE TYPE OF HYDROSEED WILL ULTIMATELY DICTATE THE AMOUNTS AND TYPES OF SOIL AMENDMENTS TO BE APPLIED
8. TURF ESTABLISHMENT: PLACING SEED, FERTILIZER, LIME AND MULCH PRIOR TO SEPTEMBER 15 AND AFTER APRIL 15 CAN BETTER ENSURE A VIGOROUS GROWTH OF GRASS.

ADAPTED FROM VTRANS TECHNICAL LANDSCAPE MANUAL FOR ROADWAYS AND TRANSPORTATION FACILITIES

TURF ESTABLISHMENT

REVISIONS	
JUNE 23, 2009	WHF
JANUARY 15, 2010	WHF
FEBRUARY 16, 2011	WHF

PROJECT NAME: BENNINGTON
PROJECT NUMBER: BRF 1000(16)

FILE NAME: z881087bdr_erodet.dgn
PROJECT LEADER: R. HEBERT
DESIGNED BY: D. BRYANT
EPSC DETAIL SHEET 2 OF 4

PLOT DATE: 8/7/2014
DRAWN BY: D. BRYANT
CHECKED BY: D. BURHANS
SHEET 61 OF 75

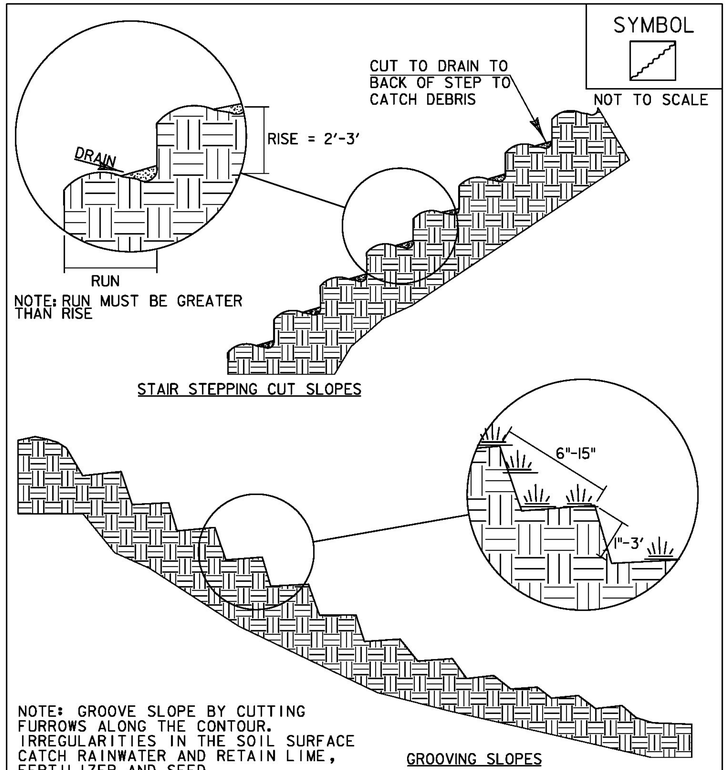

ADAPTED FROM DETAILS PROVIDED BY: NEW YORK STATE DEC
ORIGINALLY DEVELOPED BY USDA-NRCS
VERMONT DEPARTMENT OF ENVIRONMENTAL CONSERVATION

SURFACE ROUGHENING

NOTES:
REFER TO "THE VERMONT STANDARDS & SPECIFICATIONS FOR EROSION PREVENTION & SEDIMENT CONTROL -2006- " FROM THE VT AGENCY OF NATURAL RESOURCES FOR ADDITIONAL GUIDANCE.

THIS WORK SHALL BE CONSIDERED INCIDENTAL TO THE CONTRACT

REVISIONS	
APRIL 1, 2008	WHF
JANUARY 13, 2009	WHF

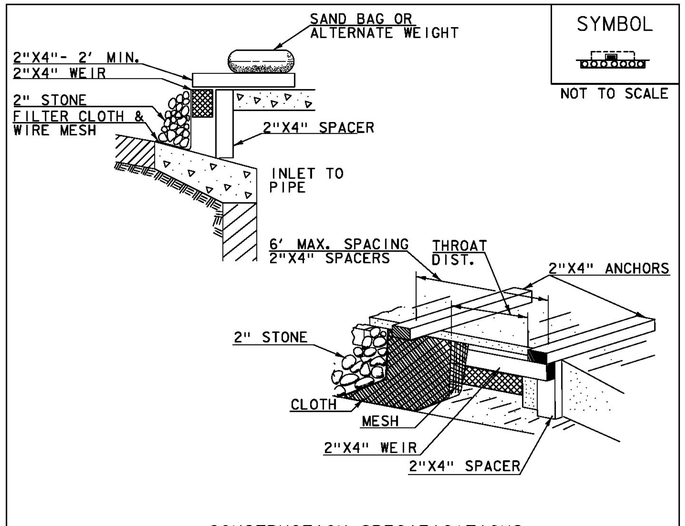

CONSTRUCTION SPECIFICATIONS

1. FILTER FABRIC SHALL HAVE AN APPARENT OPENING SIZE OF 40-85.
2. WOODEN FRAME SHALL BE CONSTRUCTED OF 2" x 4" CONSTRUCTION GRADE LUMBER.
3. WIRE MESH ACROSS THROAT SHALL BE A CONTINUOUS PIECE 30" MINIMUM WIDTH WITH A LENGTH 4' LONGER THAN THE THROAT. IT SHALL BE SHAPED AND SECURELY NAILED TO A 2"x 4" WEIR.
4. THE WEIR SHALL BE SECURELY NAILED TO 2"x 4" SPACERS 9" LONG SPACED NO MORE THAN 6' APART.
5. THE ASSEMBLY SHALL BE PLACED AGAINST THE INLET AND SECURED BY 2"x 4" ANCHORS 2' LONG EXTENDING ACROSS THE TOP OF THE INLET AND HELD IN PLACE BY SANDBAGS OR ALTERNATE WEIGHTS.
6. MAXIMUM DRAINAGE AREA 1 ACRE

ADAPTED FROM DETAILS PROVIDED BY: NEW YORK STATE DEC
ORIGINALLY DEVELOPED BY USDA-NRCS
VERMONT DEPARTMENT OF ENVIRONMENTAL CONSERVATION

CURB DROP INLET PROTECTION

NOTES:
REFER TO "THE VERMONT STANDARDS & SPECIFICATIONS FOR EROSION PREVENTION & SEDIMENT CONTROL -2006- " FROM THE VT AGENCY OF NATURAL RESOURCES FOR ADDITIONAL GUIDANCE.

THIS WORK SHALL BE PERFORMED IN ACCORDANCE WITH SECTION 653 FOR INLET PROTECTION DEVICE, TYPE I (PAY ITEM 653.40).

REVISIONS	
MARCH 6, 2008	WHF
JANUARY 13, 2009	WHF

PROJECT NAME: BENNINGTON
PROJECT NUMBER: BRF 1000(16)

FILE NAME: z88J087bdr_erodet.dgn
PROJECT LEADER: R. HEBERT
DESIGNED BY: D. BRYANT
EPSC DETAIL SHEET 3 OF 4

PLOT DATE: 8/7/2014
DRAWN BY: D. BRYANT
CHECKED BY: D. BURHANS
SHEET 62 OF 75

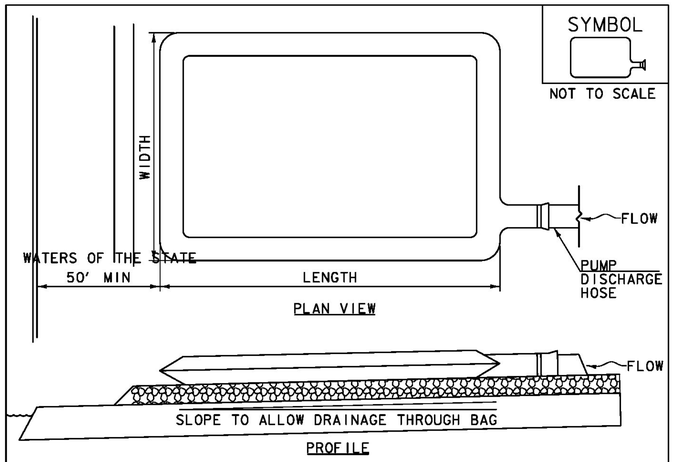

CONSTRUCTION SPECIFICATIONS

1. THE PRIMARY PURPOSE OF FILTER BAG IS TO RETAIN SILT, SAND, AND FINES DURING DEWATERING OPERATIONS.
2. FILTER BAGS SHALL BE INSTALLED ON A VEGETATED SLOPE GRADED TO ALLOW INCOMING WATER TO FLOW THROUGH THE BAG.
3. FILTER BAGS MAY ALSO BE PLACED ON COARSE AGGREGATE, STONE, OR HAYBALES TO INCREASE FILTRATION EFFICIENCY.
4. FILTER BAGS SHALL BE LOCATED A MINIMUM OF 50' FROM WATERS OF THE STATE UNLESS OTHERWISE APPROVED BY THE ENGINEER.
5. THE NECK OF THE FILTER BAG SHALL BE STRAPPED TIGHTLY TO THE DISCHARGE HOSE.
6. A FILTER BAG IS FULL WHEN IT NO LONGER CAN EFFICIENTLY FILTER SEDIMENT OR ALLOW WATER TO PASS AT A REASONABLE RATE.
7. FILTER BAG SHALL BE DISPOSED OF AS APPROVED IN THE EPSC PLAN OR AS DIRECTED BY THE ENGINEER.

FILTER BAG

NOTES:
REFER TO "THE VERMONT STANDARDS & SPECIFICATIONS FOR EROSION PREVENTION & SEDIMENT CONTROL -2006- "FROM THE VT AGENCY OF NATURAL RESOURCES FOR ADDITIONAL GUIDANCE.

THIS WORK SHALL BE PERFORMED IN ACCORDANCE WITH SECTION 653 FOR FILTER BAG (PAY ITEM 653.45) AND AS SPECIFIED IN THE CONTRACT.

REVISIONS	
MARCH 24, 2008	WHF
JANUARY 13, 2009	WHF

PROJECT NAME: BENNINGTON
PROJECT NUMBER: BRF 1000(16)

FILE NAME: z88J087bdr_erodet.dgn
PROJECT LEADER: R. HEBERT
DESIGNED BY: D. BRYANT
EPSC DETAIL SHEET 4 OF 4

PLOT DATE: 8/7/2014
DRAWN BY: D. BRYANT
CHECKED BY: D. BURHANS
SHEET 63 OF 75

STA. 7+27.12
BEGIN BRIDGE

STA. 7+07.12
END APPROACH
BEGIN PROJECT
BRF 1000(816)

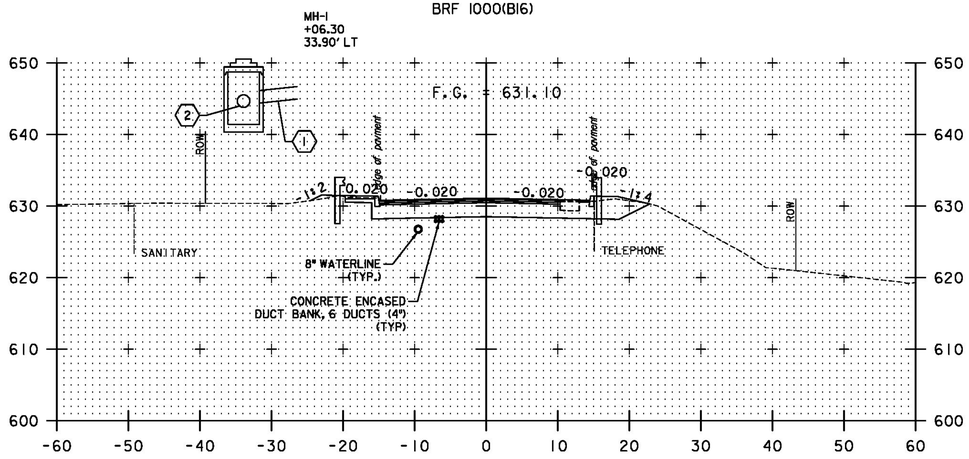

7+00

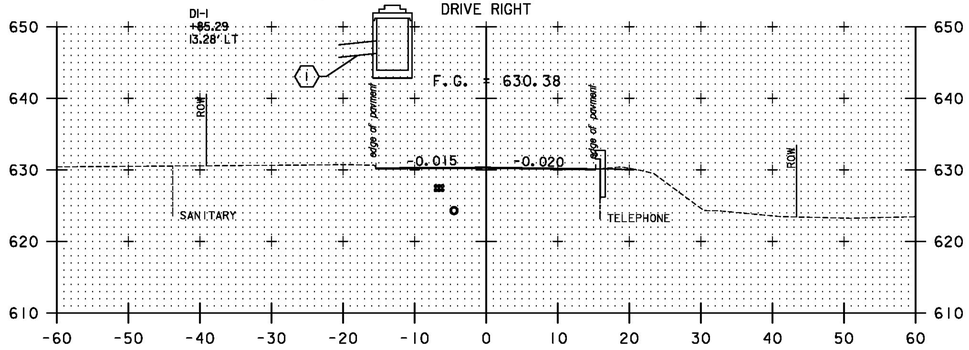

6+50

BENMONT AVENUE
STA. 6+34.10
BEGIN APPROACH
MATCH EXISTING PAVEMENT

BENMONT AVENUE
STA.10+95.00
END APPROACH
MATCH EXISTING PAVEMENT

DRIVE RIGHT

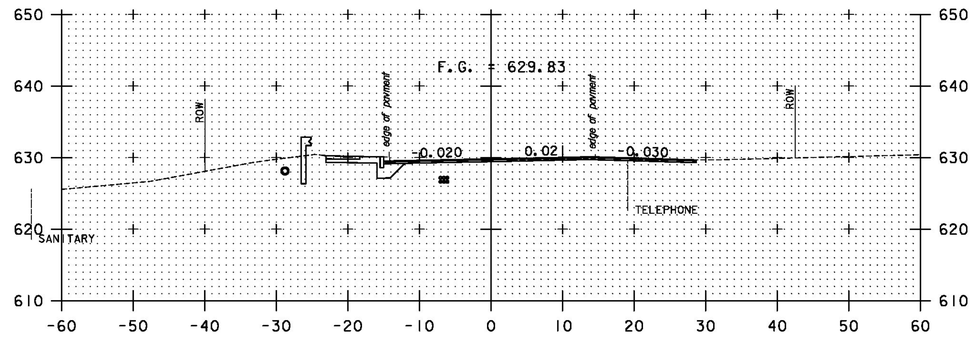

10+50

+20.34
Exist. Sanitary

+26.07
23.65' RT
UTILITY POLE

STA. 10+16.32
END PROJECT
BRF 1000(816)
BEGIN APPROACH

DI-3
+47.35
12.99' LT

+13.62
17.23' RT
TMH

SHOULDER CROSS SLOPE
STA. 10+00.00; -0.020
STA. 10+25.00; -0.020
STA. 10+50.00; +0.021

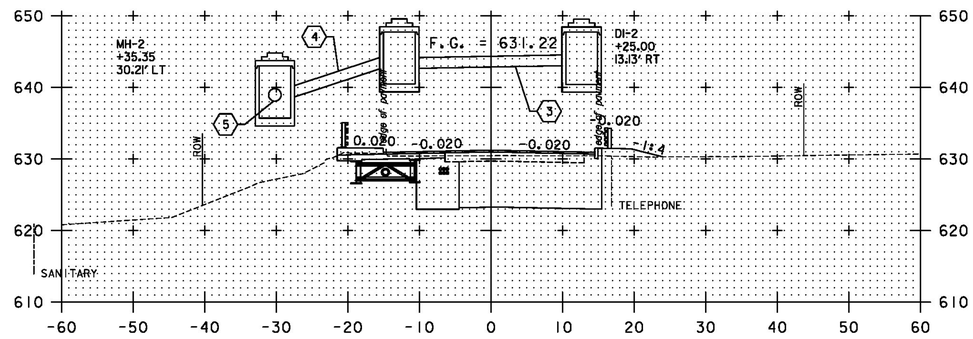

10+00

STA. 9+96.28
END BRIDGE

SCALE: 1"=10'-0"

PROJECT NAME:	BENNINGTON
PROJECT NUMBER:	BRF 1000(16)
FILE NAME: z881087bdr_xsl.dgn	PLOT DATE: 8/7/2014
PROJECT LEADER: R. HEBERT	DRAWN BY: J. DAVIS
DESIGNED BY: J. DAVIS	CHECKED BY: D. BRYANT
BENMONT AVE. CROSS SECTIONS	SHEET 64 OF 75

STATION 49+49.94 LT.
END STONE FILL, TYPE I
END GEOTEXTILE UNDER STONE FILL

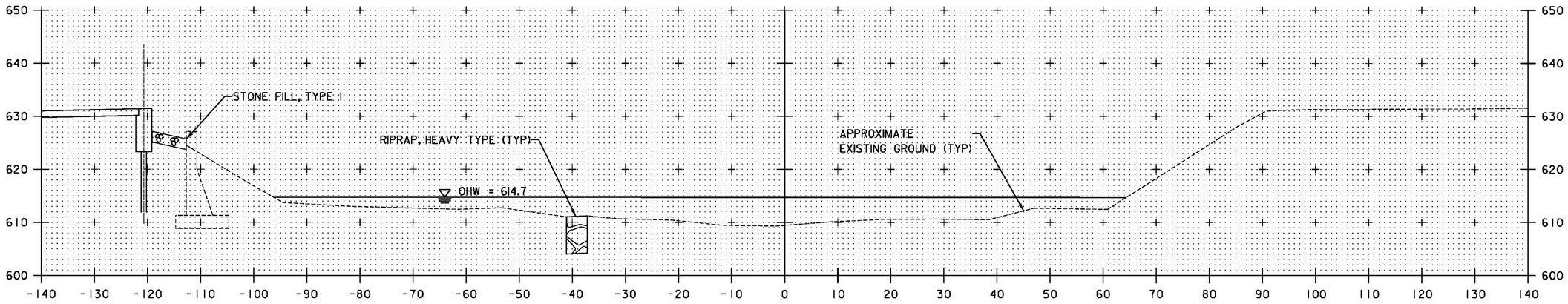

49+50

STATION 49+18.57 LT.
BEGIN STONE FILL, TYPE I
BEGIN GEOTEXTILE UNDER STONE FILL

STATION 49+49.86 LT.
BEGIN COFFERDAM EXCAVATION
BEGIN RIPRAP, HEAVY TYPE

NOTE:
EXCAVATION FOR STONE FILL, TYPE I PAID
UNDER ITEM 204.25 STRUCTURE EXCAVATION.
SEE EARTHWORK TYPICAL SECTIONS
SHEET FOR LIMITS.

SCALE: 1"=10'-0"

STA. 49+50

PROJECT NAME: BENNINGTON
PROJECT NUMBER: BRF 1000(16)

FILE NAME: z88J087xs_RB.dgn
PROJECT LEADER: R. HEBERT
DESIGNED BY: D. BURHANS
CHANNEL CROSS SECTIONS I

PLOT DATE: 8/7/2014
DRAWN BY: D. BURGESS
CHECKED BY: D. BRYANT
SHEET 65 OF 75

STATION 50+58.34 RT.
END COFFERDAM EXCAVATION
END RIPRAP, HEAVY TYPE

STATION 50+98.31 RT.
END STONE FILL, TYPE I
END GEOTEXTILE UNDER STONE FILL

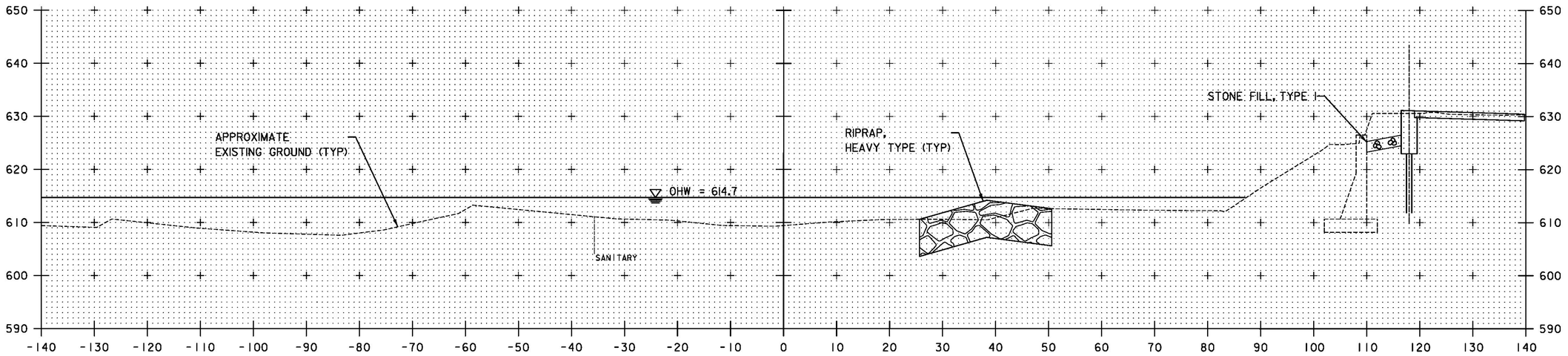

STATION 50+17.06 LT.
END COFFERDAM EXCAVATION
END RIPRAP, HEAVY TYPE

50+50

STATION 50+37.32 RT.
BEGIN STONE FILL, TYPE I
BEGIN GEOTEXTILE UNDER STONE FILL

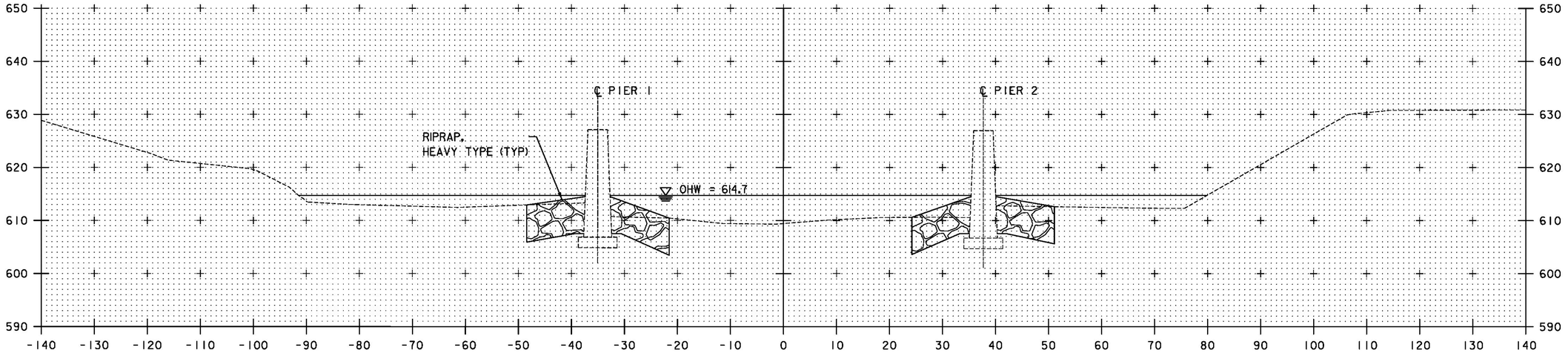

STATION 49+84.34 RT.
BEGIN COFFERDAM EXCAVATION
BEGIN RIPRAP, HEAVY TYPE

50+00

NOTE:
1. EXCAVATION FOR STONE FILL, TYPE I PAID UNDER ITEM 204.25 STRUCTURE EXCAVATION. SEE EARTHWORK TYPICAL SECTIONS SHEET FOR LIMITS.

2. REMOVAL OF LEDGE (IF ENCOUNTERED) NOT REQUIRED FOR PLACEMENT OF STONE FILL.

SCALE: 1"=10'-0"

STA. 50+00 TO STA. 50+50

PROJECT NAME: BENNINGTON
PROJECT NUMBER: BRF 1000(16)

FILE NAME: z881087xs_RB.dgn
PROJECT LEADER: R. HEBERT
DESIGNED BY: D. BURHANS
CHANNEL CROSS SECTIONS 2

PLOT DATE: 8/7/2014
DRAWN BY: D. BURGESS
CHECKED BY: D. BRYANT
SHEET 66 OF 75

SPECIAL PROVISION (CONCRETE ENCASED DUCT BANK, 6 DUCTS) (4")
7+05.20, LT - 7+24.04, LT

SPECIAL PROVISION (BRIDGE-MOUNTED DUCT BANK)
7+24.04.42, LT - 10+03.61, LT

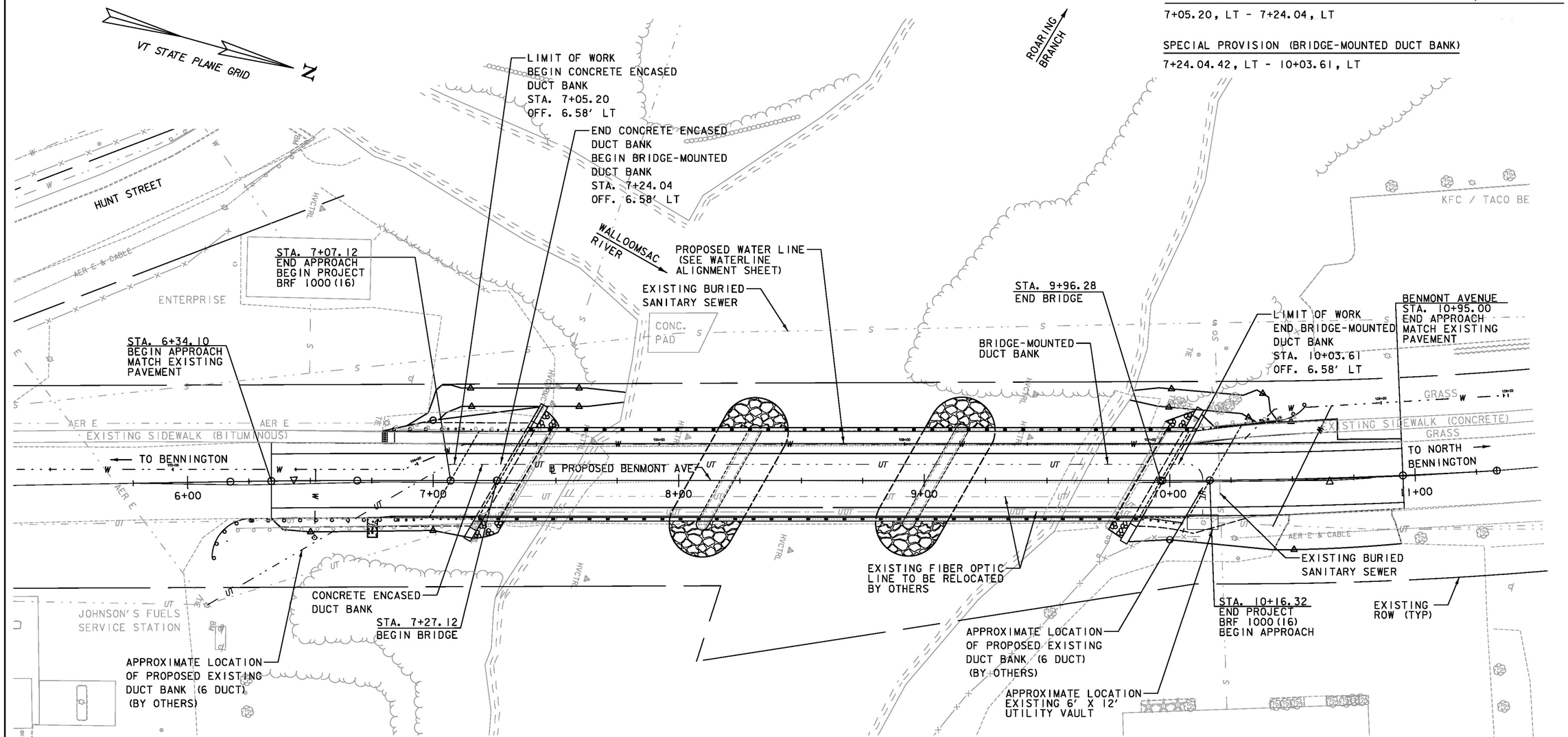

NOTES

1. THE CONTRACTOR SHALL BE RESPONSIBLE FOR SUPPORTING AND PROTECTING THE SEWER SERVICE WHILE INSTALLING THE WATER MAIN. ANY DAMAGE WHICH OCCURS AS A RESULT OF THIS INSTALLATION SHALL BE THE CONTRACTOR'S RESPONSIBILITY TO REPAIR.

2. SEE UTILITY DUCT BANK DETAILS, WATERLINE ALIGNMENT, AND WATERLINE DETAILS SHEETS FOR ADDITIONAL UTILITY DETAILS AND NOTES.

3. WHERE EXCAVATION FOR WATERLINE IS REQUIRED OUTSIDE THE PROJECT LIMITS, EXCAVATION, BACKFILL, SUBBASE, AND PAVEMENT SHALL BE PAID INCIDENTAL TO ITEM 900.645 SPECIAL PROVISION (WATER MAIN ON BRIDGE) (8") (CL52). THICKNESS OF PAVEMENT AND SUBBASE IN THESE AREAS SHALL MATCH EXISTING.

4. PROPOSED EXISTING DUCT BANKS (6 DUCT) IN APPROACHES SHALL BE BY OTHERS AND PRIOR TO THE START OF THE BRIDGE WORK. CONNECTION OF CONDUIT TO THE PROPOSED EXISTING CONDUIT IN THE APPROACHES SHALL BE BY THE UTILITY. CONDUIT CONNECTIONS SHALL BE MADE DURING CONSTRUCTION PHASE 1. CONTRACTOR SHALL COORDINATE WORK WITH UTILITY. RELOCATION OF EXISTING FIBER OPTIC LINE WITHIN CONDUITS SHALL BE BY THE UTILITY.

5. CONSTRUCTION OF NEW BURIED UTILITIES WILL BE COORDINATED TO AVOID THE EXCAVATION OF NEW PAVED SURFACES. UTILITY WORK IN APPROACHES WILL BE CONDUCTED PRIOR TO THE INSTALLATION OF TRAFFIC CONTROL FOR PHASE 1. SINGLE LANE ALTERING TRAFFIC WILL BE MAINTAINED FOR THIS PORTION OF WORK.

DATUM	
VERTICAL	NAVD 88
HORIZONTAL	NAD 83 (92)
ADJUSTMENT	COMPASS

SCALE 1" = 20'-0"
20 0 20

PROJECT NAME:	BENNINGTON
PROJECT NUMBER:	BRF 1000(16)
FILE NAME: z888087bdr_utl.dgn	PLOT DATE: 8/7/2014
PROJECT LEADER: R. HEBERT	DRAWN BY: D. BURHANS
DESIGNED BY: D. BURHANS	CHECKED BY: D. BRYANT
UTILITY PLAN SHEET	SHEET 67 OF 75

① 4" DIA PVC DUCT
② 4" DIA GALVANIZED STEEL DUCT
③ PVC-GALVANIZED ADAPTOR
④ GALVANIZED-PVC ADAPTOR
⑤ PVC EXPANSION JOINT
⑥ PVC LOCK RING

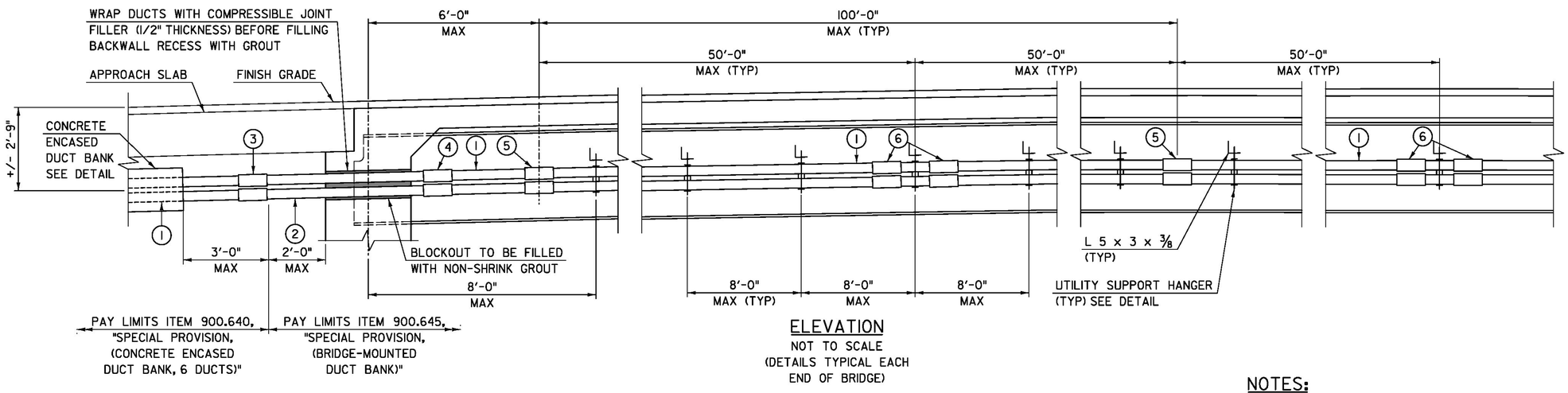

ELEVATION
NOT TO SCALE
(DETAILS TYPICAL EACH END OF BRIDGE)

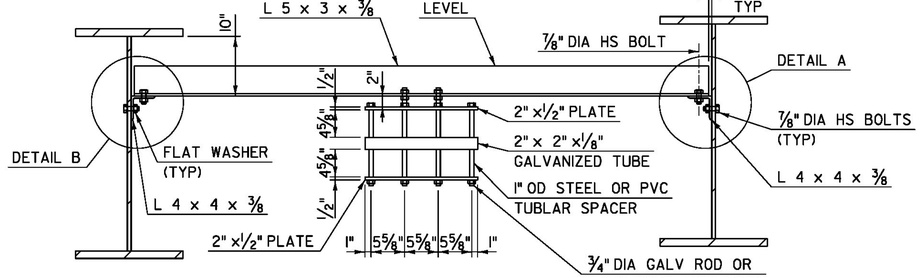

UTILITY SUPPORT DETAIL
SCALE 1" = 1'-0"
(USE DETAIL A AT ONE END AND DETAIL B AT THE OTHER END)

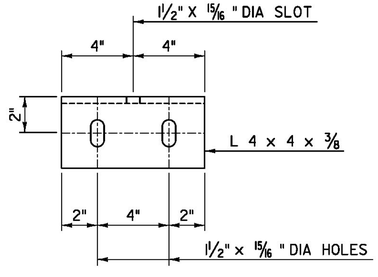

DETAIL A
SCALE 3" = 1'-0"

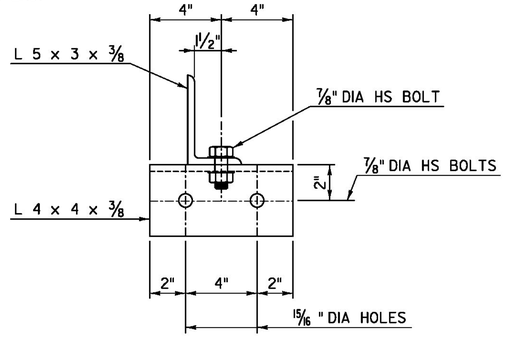

DETAIL B
SCALE 3" = 1'-0"

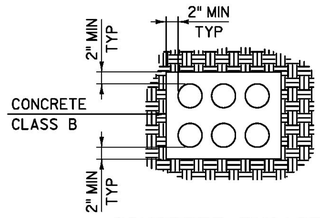

CONCRETE ENCASED DUCT BANK DETAIL
SCALE 1" = 1'-0"

NOTES:

1. PVC EXPANSION JOINTS SHALL BE SLIDING SLEEVE TYPE TO ACCOMMODATE AT LEAST 4" OF EXPANSION TRAVEL.
2. THREADED COUPLINGS SHALL BE USED ON STEEL CONDUIT.
3. STRUCTURAL STEEL FOR ANGLES SHALL BE AASHTO M270 GR 50W.
4. BOLTS USED IN FIELD CONNECTIONS SHALL BE TYPE 3, 7/8" DIA, AND MEET THE REQUIREMENTS OF SUBSECTION 714.05. HOLE DIAMETERS SHALL BE 15/16 ". ANY CONNECTIONS NOT DESIGNED SHALL BE DETAILED BY THE FABRICATOR AND SUBMITTED TO THE STRUCTURES ENGINEER FOR APPRAOVAL.
5. STEEL FITTINGS AND RODS SHALL BE GALVANIZED IN ACCORDANCE WITH AASHTO M232. A NEOPRENE OR VINYL WASHER SHALL BE PLACED BETWEEN THE ANGLE SURFACE (ON BOTH SIDES) AND THE NUT/WASHER TO ISOLATE THE CONTACT BETWEEN THE TWO SURFACES.
6. BRIDGE MOUNTED DUCT BANK, INCLUDING STRUCTURAL STEEL SUPPORT ANGLES, UTILITY SUPPORT HANGARS, ABUTMENT PENETRATIONS, CONDUITS, ASSOCIATED JOINT ASSEMBLIES, AND ALL OTHER INCIDENTAL ITEMS NECESSARY TO COMPLETE THE WORK, SHALL BE PAID FOR AS ITEM 900.645, "SPECIAL PROVISION (BRIDGE-MOUNTED DUCT BANK)".
7. CONCRETE ENCASED DUCT BANK, INCLUDING CONDUITS, ASSOCIATED JOINT ASSEMBLIES, CONCRETE, AND ALL OTHER INCIDENTAL ITEMS NECESSARY TO COMPLETE THE WORK, SHALL BE PAID FOR AS ITEM 900.640, "SPECIAL PROVISION (CONCRETE ENCASED DUCT BANK, 6 DUCTS) (4")".
8. CONNECTION OF CONDUIT TO PROPOSED CONDUIT IN APPROACHES INSTALLED BY OTHERS WILL BE DONE BY THE UTILITY.

PROJECT NAME:	BENNINGTON
PROJECT NUMBER:	BRF 1000(16)
FILE NAME: z881087bdr_util.dgn	PLOT DATE: 8/7/2014
PROJECT LEADER: R. HEBERT	DRAWN BY: S. MORGAN
DESIGNED BY: D. MYERS	CHECKED BY: R. HEBERT
UTILITY DUCT BANK DETAILS	SHEET 68 OF 75

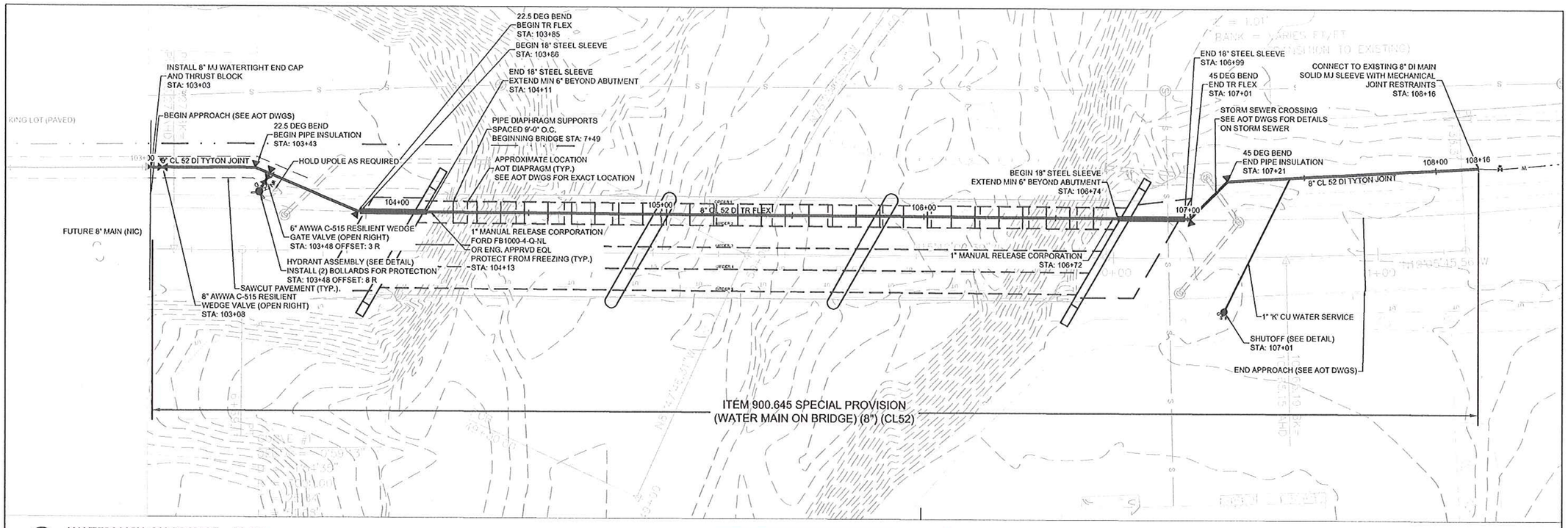

1 WATERMAIN ON BRIDGE - PLAN

Scale: 1:20

THIS SHEET REPLACES ORIGINAL CONTRACT SHEET 69

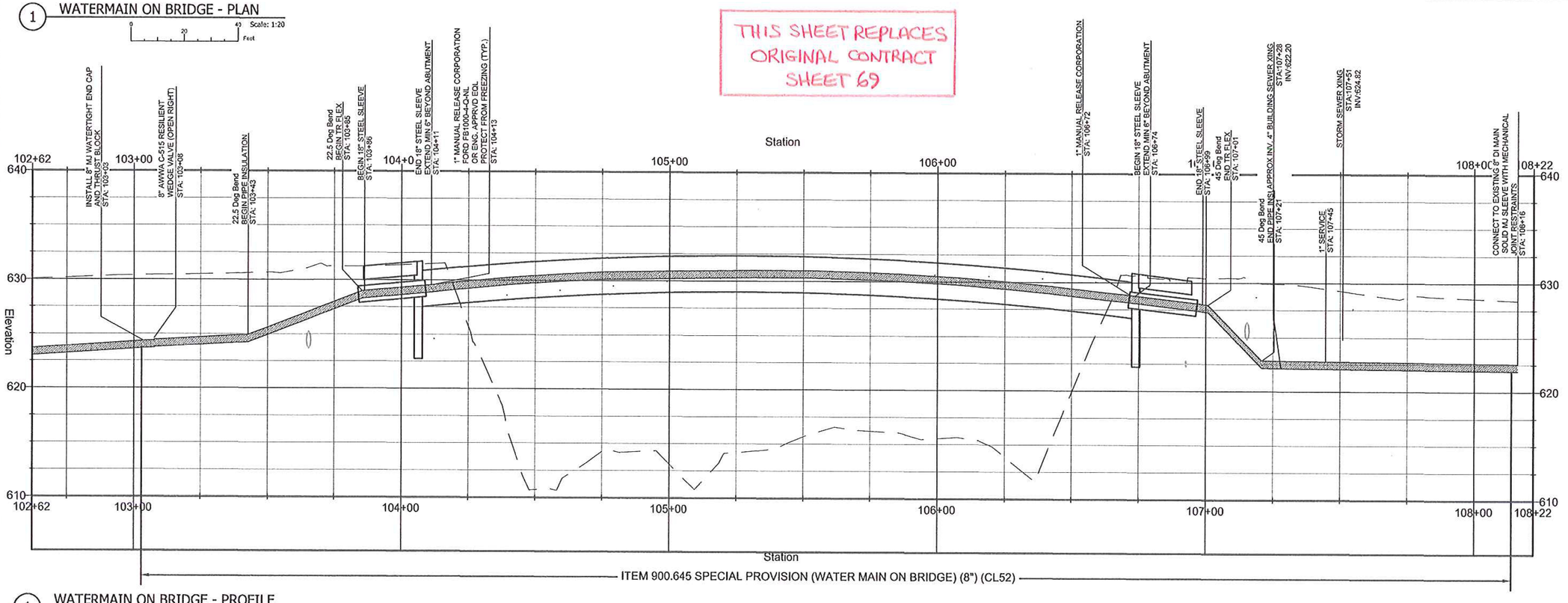

1 WATERMAIN ON BRIDGE - PROFILE

Horizontal Scale: 1:20 - Vertical Scale: 1:4

MSK ENGINEERING AND DESIGN, INC.
P.O. BOX 10, 150 DEPOT STREET
BENNINGTON, VERMONT 05201
PH: (802) 447-1402 FAX: (802) 445-1291

REVISIONS

NO.	DATE	DESCRIPTION
1	12-10-2013	REVISED FOR PERMITTING
2	01-23-2014	REVISED PER STATE COMMENTS
3	08/26/2015	REVISED FOR CONTRACTOR PRICING

BRF 1000(16)
BENMONT AVENUE
BENNINGTON, VT

DRAWINGS THIS SHEET
WATERLINE ALIGNMENT

NUMBER	DATE
	11-16-2013
DRAWN	CHECKED
JMD	

SHEET NUMBER
69A of 75

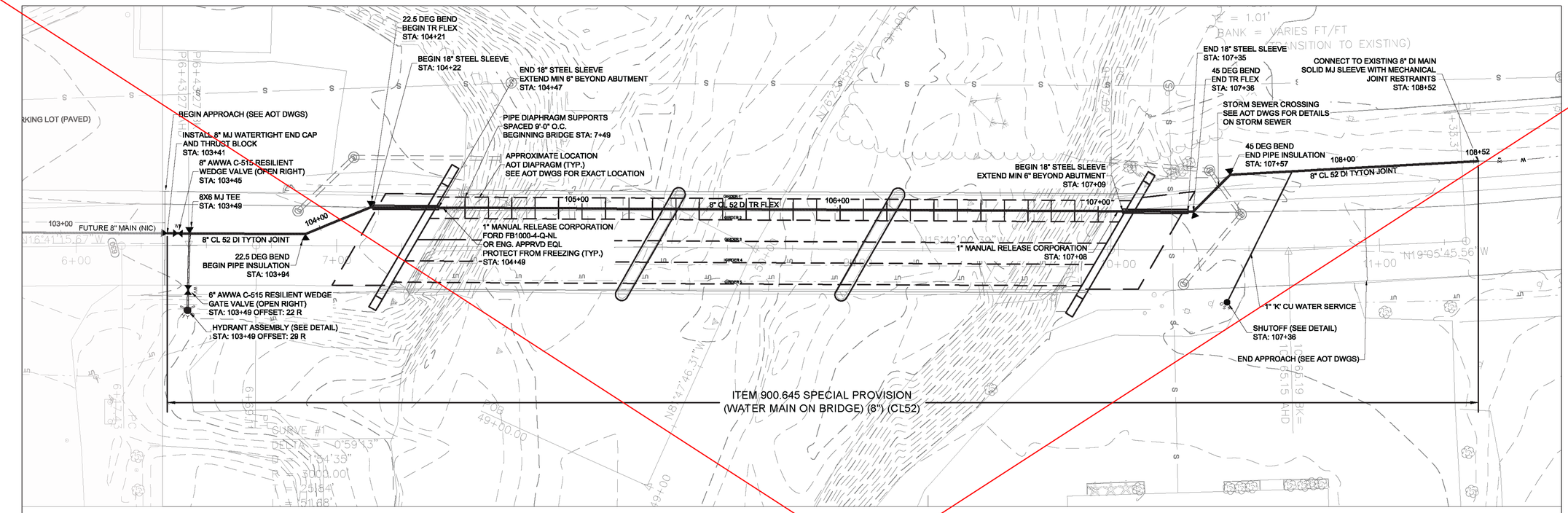

1 WATERMAIN ON BRIDGE - PLAN

Scale: 1:20

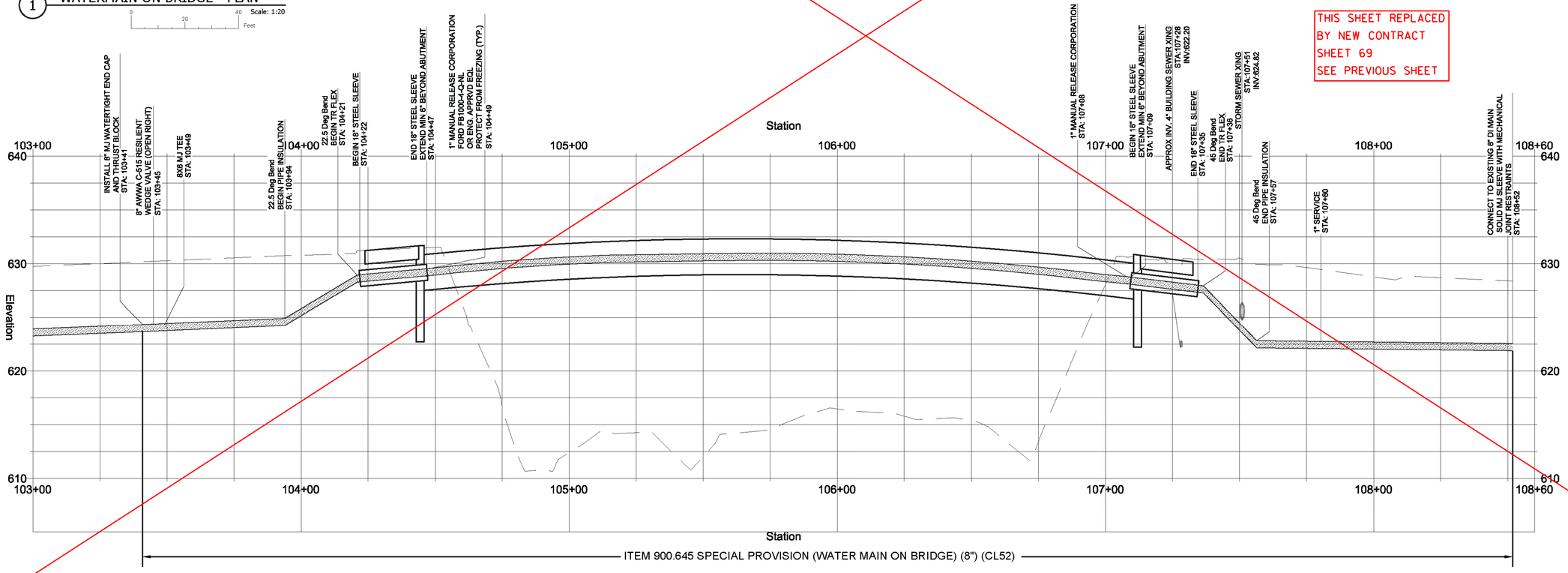

1 WATERMAIN ON BRIDGE - PROFILE

Horizontal Scale: 1:20 - Vertical Scale: 1:4

THIS SHEET REPLACED
BY NEW CONTRACT
SHEET 69
SEE PREVIOUS SHEET

MSK ENGINEERING AND DESIGN, INC.
P.O. BOX 10, 150 DEPOT STREET
BENNINGTON, VERMONT 05201
PH: (802) 447-1402 FAX: (802) 445-1251

REVISIONS

NO.	DATE	DESCRIPTION
1	12-10-2013	REVISED FOR PERMITTING
2	01-23-2014	REVISED PER STATE COMMENTS

BRF 1000(16)
BENMONT AVENUE
BENNINGTON, VT

DRAWINGS THIS SHEET
WATERLINE ALIGNMENT

NUMBER	DATE
	11-16-2013
DRAWN	CHECKED
JMD	

SHEET NUMBER
69Bof 75

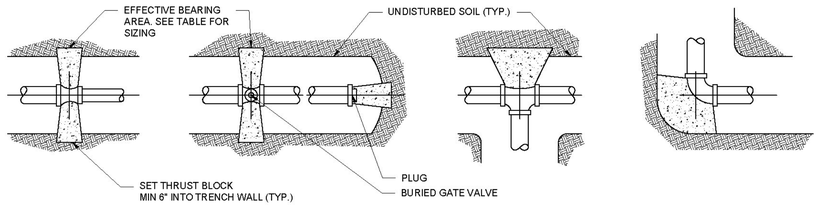

REDUCER NTS | VALVE/DEAD END NTS | TEE NTS | 90°, 45°, OR 22.5° BEND NTS

MINIMUM BEARING SURFACE AREA OF CONCRETE THRUST BLOCKS (IN SQUARE FEET)

REDUCERS			4-8"				10"				12"				SOIL CONDITION	SAFE BEARING LOAD (PSF)
8X6	10X8	12X8	ENDS & TEES	90° ELB	45° ELB	22.5° OR LESS	ENDS & TEES	90° ELB	45° ELB	22.5° ELB	ENDS & TEES	90° ELB	45° ELB	22.5° OR LESS		
3.0	5.0	6.0	4.0	6.0	3.0	2.0	6.0	8.0	5.0	2.0	8.0	12.0	6.0	3.0	SOUND SHALE	10000
3.0	5.0	6.0	4.5	6.5	3.5	2.0	8.0	11.0	6.0	3.0	10.0	14.0	7.5	4.0	CEMENTED GRAVEL AND SAND	4000
7.0	7.0	11.0	7.0	9.0	5.0	3.0	10.0	14.0	7.0	4.0	14.0	19.0	11.0	5.0	COARSE AND FINE COMPACT SAND	3000
8.0	9.0	14.0	15.0	20.0	10.0	5.0	21.0	31.0	15.0	8.0	30.0	40.0	20.0	10.0	MEDIUM CLAY (CAN BE SPADED)	2000
8.0	11.0	16.0	20.0	28.0	15.0	8.0	29.0	41.0	22.0	11.0	41.0	58.0	31.0	16.0	SOFT CLAY	1000
MAX WATER PRESSURE 300 PSI																

C1 TYPICAL CONCRETE THRUST BLOCK DETAIL

NTS

NOTES:
1. PLACE 3 MIL MINIMUM POLYETHYLENE SHEETING BETWEEN ALL CONCRETE THRUST BLOCKS AND PIPE AND/OR FITTINGS TO PREVENT BONDING

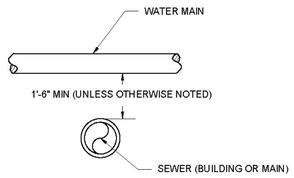

C4 WATER CROSSING SEWER - ABOVE

Scale: NTS

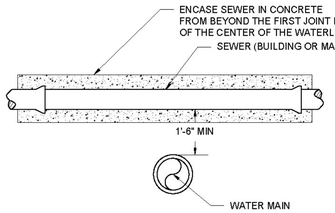

C5 WATER CROSSING SEWER - BELOW

Scale: NTS

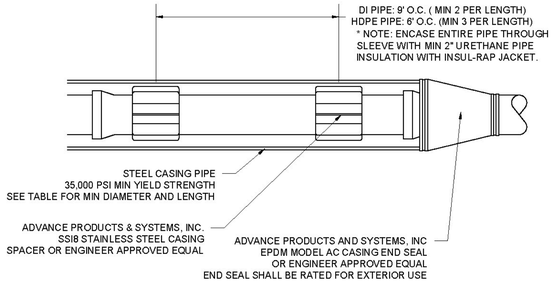

C7 SLEEVE PIPE DETAIL

Scale: NTS

SLEEVE PIPE SIZE AND THICKNESS		
CARRIER DIA	CASING DIA/MATL	MIN THICKNESS
3/4"-2" 'K' CU	4" HDPE	N/A
4" DI	14" STEEL	0.312 inch
6" DI	16" STEEL	0.312 inch
8" DI	18" STEEL	0.312 inch
10" DI	20" STEEL	0.312 inch
12" DI	22" STEEL	0.312 inch
16" DI	28" STEEL	0.375 inch

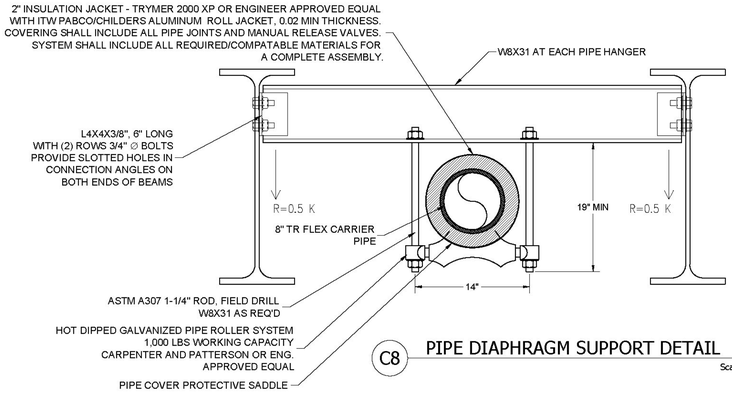

C8 PIPE DIAPHRAGM SUPPORT DETAIL

Scale: NTS

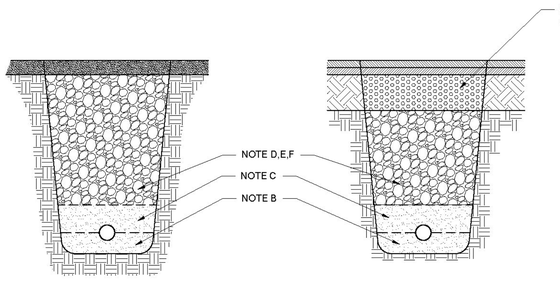

C2 TYPICAL TRENCH DETAIL

Scale: NTS

INSTALLATION SPECIFICATIONS

A. MINIMUM BURIAL DEPTH 5'-6" (4'-0" FOR SEWER) IF CONDITIONS PREVENT MINIMUM BURIAL DEPTH, ALL SECTIONS OF LINE LESS THAN MIN. DEPTH SHALL BE INSULATED WITH 1" THICKNESS RIGID FOAM INSULATION PER FOOT LESS THAN MINIMUM.(MIN. 2" thickness 250 psi)

B. BED PIPE IN 6" OF 3/8" CRUSHED STONE. PIPE SHALL NOT BE LAID IN UNCOMPACTED SOIL OR IN WATER.

C. BACKFILL OVER PIPE W/ 12" MIN 3/8" CRUSHED STONE ENTIRE WIDTH OF TRENCH

D. REMAINDER OF BACKFILL TO BE SELECT MATERIAL OR GRANULAR BACKFILL FOR STRUCTURES NOT GREATER THAN 6" IN LARGEST DIMENSION. BACKFILL TO BE COMPACTED IN 6" LIFTS UNDER ROADS AND PAVED AREAS.

E. SELECT MATERIAL SHALL CONSIST OF SUITABLE MATERIAL REMOVED FROM EXCAVATION, AND SHALL BE FREE OF CLODS, DEBRIS, FROZEN CHUNKS, PAVEMENT PIECES, LARGE STONES, ORGANIC MATERIAL OR ANY OTHER MATERIAL DEEMED UNSUITABLE BY THE ENGINEER.

F. BACKFILL SHALL BE COMPACTED TO 95% OF MAXIMUM DRY DENSITY IN ALL TRENCH EXCAVATIONS. (85% OF LAWN/GRASS AREA)

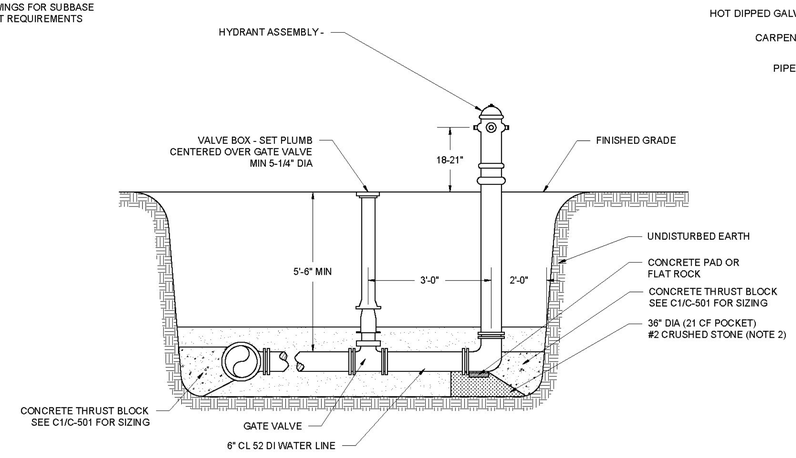

C6 HYDRANT ASSEMBLY DETAIL

NTS

NOTES:
1. ALL MECHANICAL JOINT FITTINGS SHALL HAVE "MEGALUG" RETAINER GLANDS
2. HYDRANT DRAIN SHALL BE PLUGGED IF HYDRANT IS LOCATED WITHIN 10 FEET OF A NON-PRESSURE RATED SEWERLINE OR MANHOLE OR IN AN AREA WITH SEASONAL HIGH WATER TABLE ABOVE DRAIN OR AS DESIGNATED BY THE ENGINEER

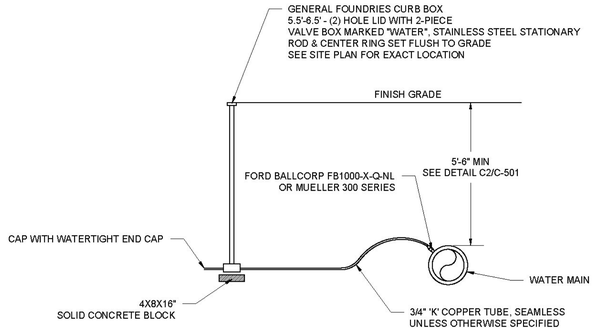

C9 WATER SERVICE TYPICAL

NTS

NOTES:
1. COTRACTOR TO SUPPLY A MINIMUM OF (3) TIE DISTANCES FOR CORPORATIONS, CURB STOPS, END OF SERVICE AND ANY OTHER FITTINGS IN THE SERVICE LINE AS A PART OF ALL AS-BUILT DRAWINGS.

MSK ENGINEERING AND DESIGN, INC.
P.O. BOX 10, 150 DEPOT STREET
BENNINGTON, VERMONT 05201
PH: (802) 447-1462 FAX: (802) 445-1291

REVISIONS

NO.	DATE	DESCRIPTION
1	12-16-2013	REVISED FOR PERMITTING

BRF1000(16)
BENMONT AVENUE
BENNINGTON, VT

DRAWINGS THIS SHEET

WATERLINE DETAILS

NUMBER	DATE
	11-16-2013
DRAWN	CHECKED
JMD	JRS

SHEET NUMBER

70 of 75

ANY ABOVE GROUND HAZARDS ENCOUNTERED SHALL BE REPORTED TO THE ENGINEER AND OWNER IMMEDIATELY. DO NOT START ANY EXCAVATION UNTIL ALL HAZARDS ARE PROPERLY IDENTIFIED AND MADE SAFE.

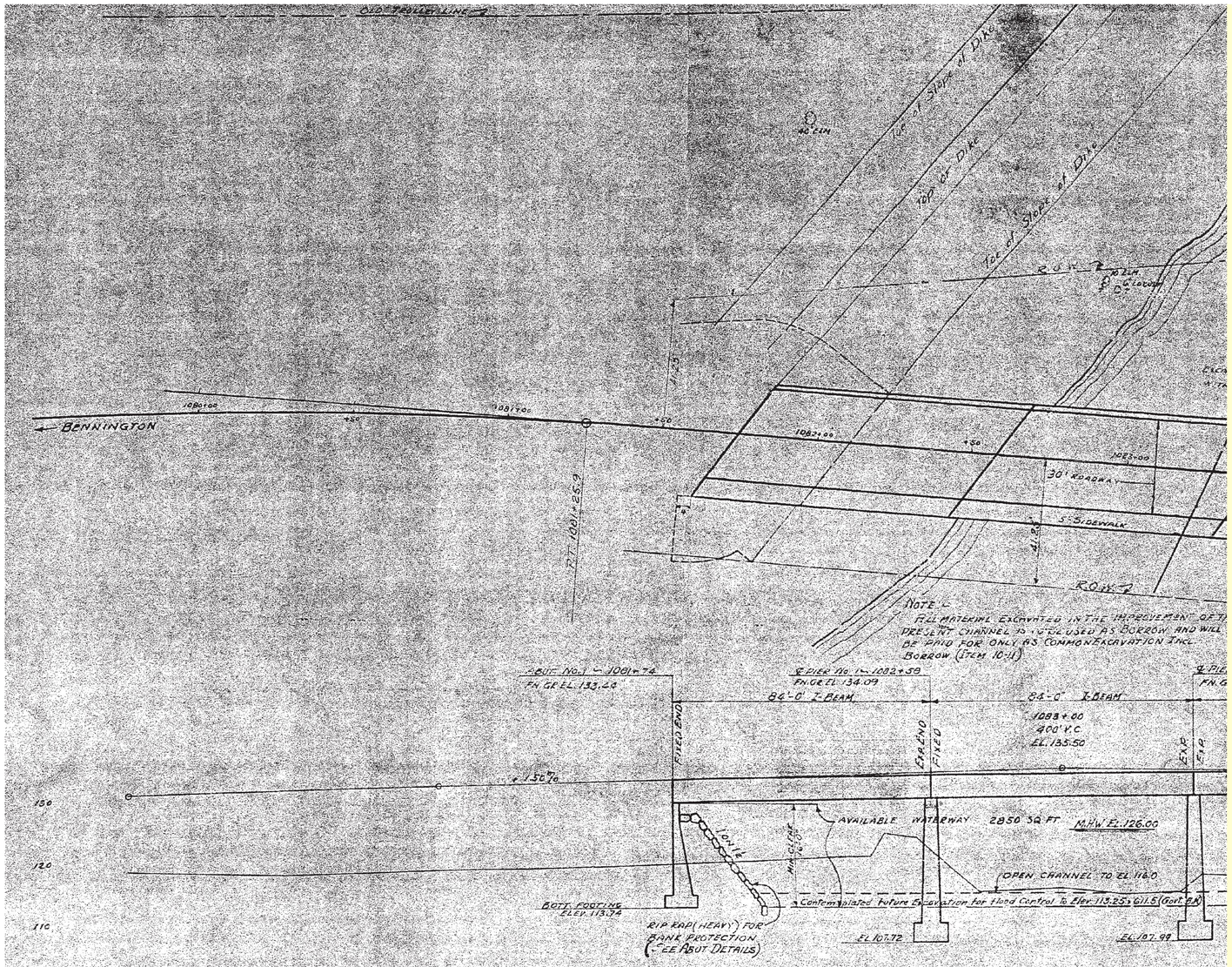

NOTES:-
IMPOSSIBLE TO TAKE WASH BORINGS DUE TO HEAVY BOULDER FORMATION.
DRIFT :- DEPOSIT OF MATERIAL (GRAVEL & BOULDERS)
SCOUR :- NONE
VELOCITY :- HEAVY BUT MUCH LESS THAN TWO MILES UPSTREAM.

LIST OF DE	
8	PLAN & PR
10	DETAILS -
11	"
12	"
13	" ALTE
14	SUPERSTRU
15	BALUSTRA
17	BARRICADE
16	SB20 - DET
30-32	SECTIONS

BM #160 SPOT ON R.R. BRIDGE ABUT. 183' LT. OF STA. 1083+46. E. 125.78 = 623.53 U.S.B.M.
FOR TIES AND OTHER BMs SEE ROADWAY PLAN & PROFILE SHEETS

| | | |

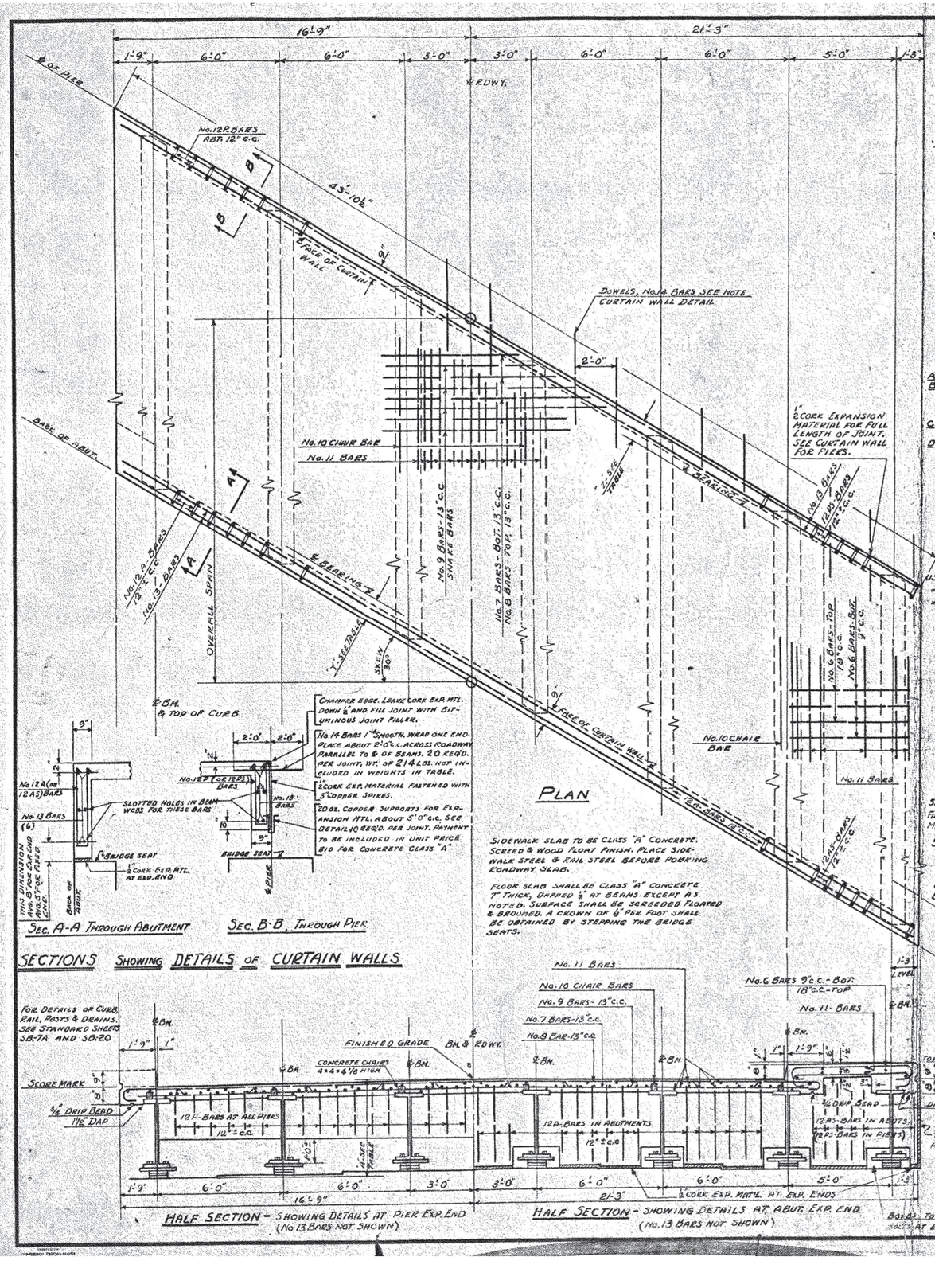

General Notes.

Steel Superstructure: To include 7 WF Beams, 14 Bearing R Assemblies and Indicated Diaphragms Per Span.

Camber: All steel beams shall be rolled to a true circular camber for the full length of the beam, the middle ordinate to be as listed in the table.

Paint: All structural steel shall be painted as specified under item 43A-B of Pamphlet-E, Standard Road & Bridge Specifications, State of Vermont, 1936.

The final coat of field paint shall be black unless otherwise directed by the Engineer.

Quantities: This sheet does not include quantities for railing, curbs, and posts.

Reinforcing: Transverse reinforcing bars shall be provided as for a square span. Bars shall be cut in field to fit one skew end. Cut off ends shall be used in opposite skew end.

For location of fixed and expansion bearings, see plan & profile sheet.

Drains: Refer to Std. Sheet S&N 20 Detail A

Design: All materials & construction shall conform to the Standard Road & Bridge Specifications, State of Vermont, 1936, & the A.A.S.H.O. Specs for 1935 designed for H-15 live loading. D.L. includes weight of beams, slab, 26'-0" paving, rail S.B.-7A sidewalk L.L. of 378#/l.f. Impact on the truck L.L. only of 23.7%. (For 84' span only)

Details of Reinforcing Bars

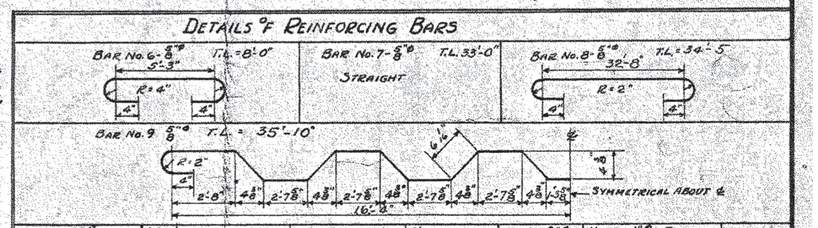

No. 10 & No. 11 Span	Length	8'-8" Bars	At Abutments Bar 12A H	At Abutments Bar 12A T.L.	At Abutments Bar 12AS H	At Abutments Bar 12AS T.L.	At Piers Bar 12B H	At Piers Bar 12B T.L.	At Piers Bar 12BS H	At Piers Bar 12BS T.L.
28		28								
33		33								
38		38								
43		43								
49		49								
54		54								
59		59								
64		64								
69		69								
74		74								
79		79								
84	42'-9"	84	3'-4"	7'-8"	4'-0"	9'-0"	2'-4"	5'-8"	3'-0"	7'-0"

Note: In multi-span structures use 12B, 12BS bars in curtain wall over piers.

No. 13 — 8'-8" Straight T.L. = 23'-0"

No. 14 — 1" ℄ Dowels Straight & Smooth Wrap One End T.L. = 4'-0" These bars used only on multi-span structures.

Overall Span	Structural Steel: Size WF Beam	Dim. A Fixed End	Lgth. Beam	Dim. X	Dim. Y	Dim. Z	Camber	T/C Reqd.	Total Wt. Struc. Steel	Reinforcing Steel Schedule: No. 6	7	8	9	10	11	*12A	12AS	13	*Tot. Wt. Reinf. Steel	Concrete Class A: *Cu. Yards
28																				
33																				
38																				
43																				
49																				
54																				
59																				
64																				
69																				
74																				
79																				
84	36"@260#	3.91	4-05	83'-5"	2'-0"	1'-0"	10"	2½"	930	157,743	170	78	78	78	12	160	60	12	24	16,201	86.0

* Quantities in this table are for single span with 2 sidewalk. For multiple span structures quantities of reinforcing steel & concrete class "A" vary from those listed. Quantities do not include reinforcing steel & concrete class "A" in approach slab bracket where used. Refer to 38-20 Detail I.

Estimated Quantities

Project Name: Bennington — No. — Spans: F.A.R. 23 Cont. 2 — 3 @ 84

30° Skew
STANDARD I-BEAM BRIDGE
with reinforced Concrete Deck
30' Roadway with Sidewalk
Spans of 28' to 84' Overall

Surveyed by
Designed by J.G.G. for 84' Span (Mar. 1, 1938)
Drawn by D.W.P. (From S.I. 84-30-6 SW.)
Traced by D.W.P.
Checked by for 84' Span Details
Series S.I.B. No. 30-30° Skew with 5 I Beams Filed
Sheet of Sheets

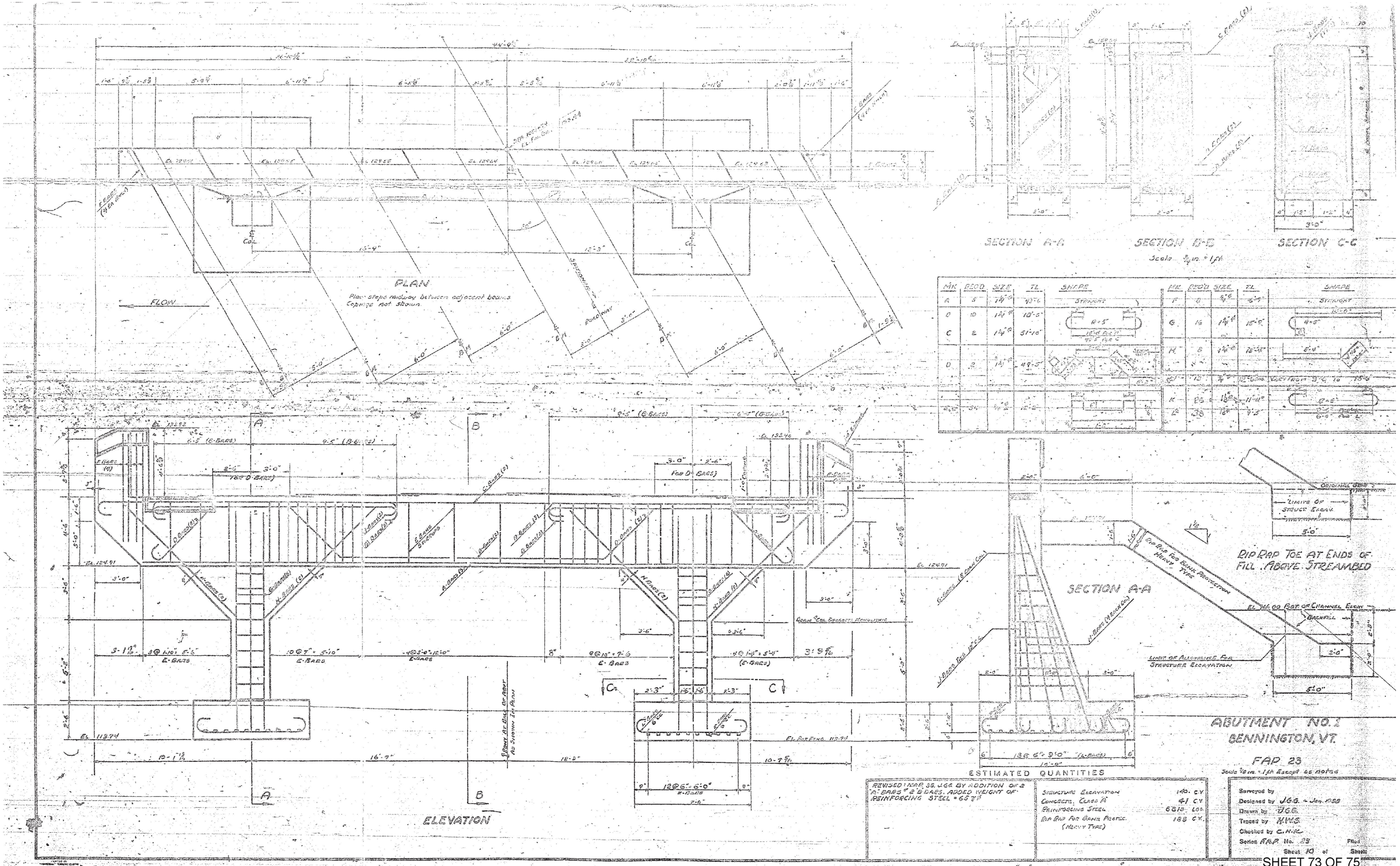
PLAN
Place steps midway between adjacent beams
Copings not shown
FLOW
ROADWAY
SECTION A-A
SECTION B-B
SECTION C-C
Scale 3/4 in. = 1 ft.
ELEVATION
SECTION A-A
RIP RAP TOE AT ENDS OF FILL ABOVE STREAMBED
RIP RAP FOR BANK PROTECTION HEAVY TYPE
LIMITS OF STRUCT. EXCAV.
LIMIT OF ALLOWANCE FOR STRUCTURE EXCAVATION
BACKFILL
ABUTMENT NO. 1
BENNINGTON, VT.
FAP 23
Scale 3/8 in. = 1 ft. Except as noted
ESTIMATED QUANTITIES
REVISED: MAR. 30, J.G.G. BY ADDITION OF 2 "A" BARS & 2 "B" BARS. ADDED WEIGHT OF REINFORCING STEEL = 65 #
STRUCTURE EXCAVATION 140 C.Y.
CONCRETE, CLASS "A" 41 C.Y.
REINFORCING STEEL 6818 LBS.
RIP RAP FOR BANK PROTEC. (HEAVY TYPE) 188 C.Y.
Surveyed by
Designed by J.G.G. - Jan. 1958
Drawn by J.G.G.
Traced by H.W.S.
Checked by C.H.K.
Series F.A.P. No. 23
Sheet 10 of
SHEET 73 OF 75

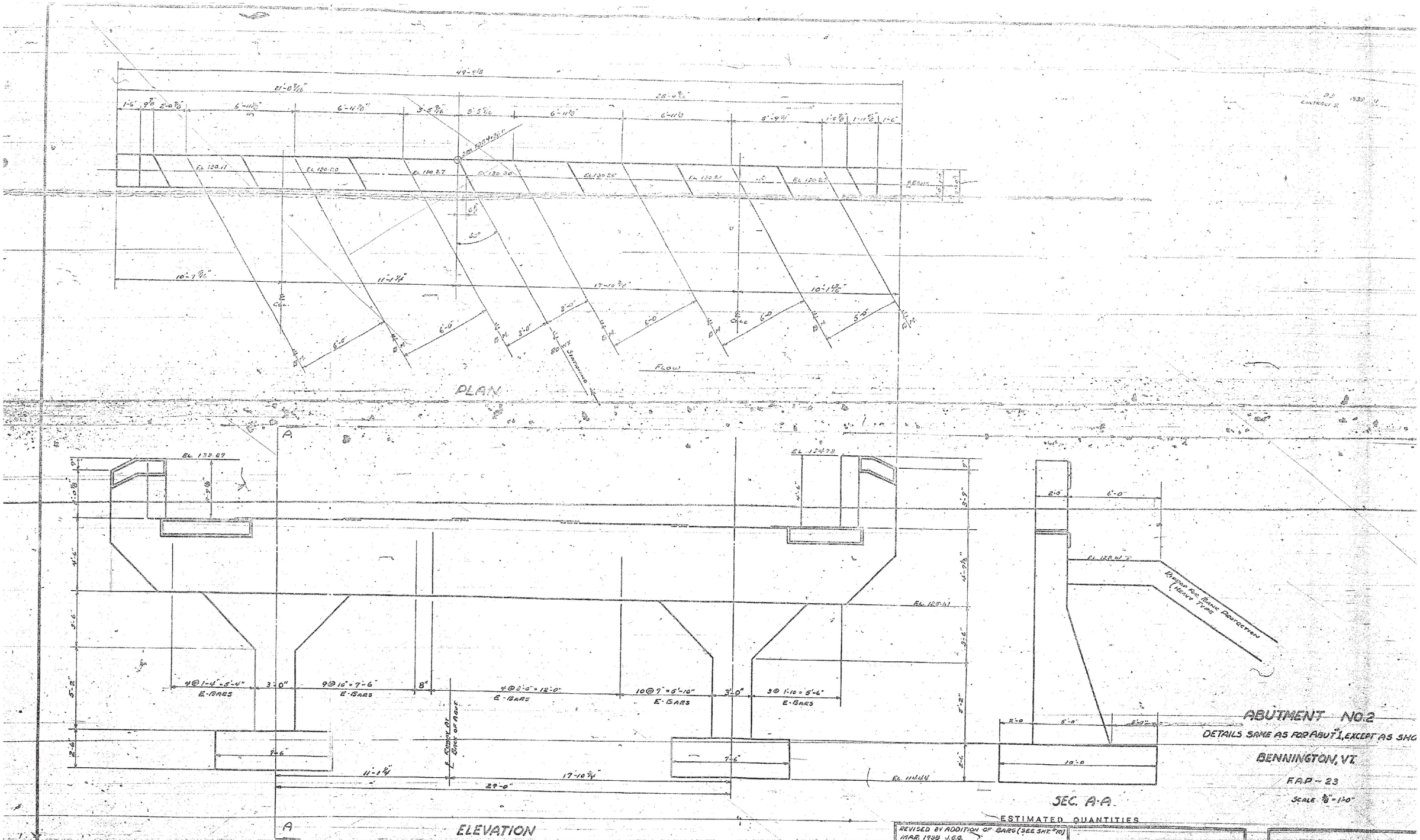

ESTIMATED QUANTITIES

REVISED BY ADDITION OF BARS (SEE SHT. #10)
MAR. 1938 J.G.G.

STRUCTURE EXCAVATION	146	C.Y.
CONCRETE CLASS "A"	41	C.Y.
REINFORCING STEEL	8813	LBS.
RIP RAP FOR BANK PROTEC. (HEAVY TYPE)	197	C.Y.

Surveyed by
Designed by J.G.G.
Drawn by J.G.G.
Traced by H.W.S.
Checked by
Series FAP No. 23 Filed
Sheet 11 of Sheets

Pier #1 130.03	Pier #1 130.39	Pier #1 130.32	Pier #1 130.28	Pier #1 130.28	Pier #1	Pier #1 130.15
Pier #2 130.24	Pier #2 130.31	Pier #2 130.37	Pier #2 130.33	Pier #2 130.31	Pier #2 130.25	Pier #2 130.23
Pier #1 130.09	Pier #1 130.12	Pier #1 130.17	Pier #1 130.15	Pier #1 130.07	Pier #1 130.05	Pier #1 129.97
Pier #2 129.24	Pier #2 130.31	Pier #2 130.37	Pier #2 130.37	Pier #2 130.21	Pier #2 130.25	Pier #2 130.23

5 Bars #6 Ø Ties For Each Stirrup Centers Not Shown

4" Clear

Pier #1 Centerline Pier #2 Centerline

Centers of Stirrups

30°

R=1.N.

3'-0"

6'-0"

5'-0"

PLAN

NOTE: Place Stirrups Normal Between Intersection Points of ℄ Beams With ℄ Bearings. Stirrups Not To Be Painted Until After Erection

3" Min. Var. in Fillcrete

Lower Bridge Seat Batter 1/2"/ft

Upper Bridge Seat Batter 1/2"/ft

Sloped Stone Around Stirrups

5 Sloped Marble Only Around Pier

Batter 1/2" To 12"

Batter 1/2" To 12"

Slope Batter Evenly At Low Water Stone Elev 1129.17 For Pier #1 Elev 1129.14 For Pier #2

Batter 1/2" In 12"

20'-3"

Pier #1 - El. 1129.70
Pier #2 - El. 1129.98

51'-2 3/4"

ELEVATION

Note: Payment for Structure Excavation Shall be made only for that material below the finished grade of the excavation for improvement of channel

El. 1160 Contract Stream Bed

El. 1132.5 Future Stream Bed

GRAVITY PIERS
DETAILS OF PIERS 1 & 2
BENNINGTON
FAP 23 - CONTRACT 2

1'-6" 2'-6" 2'-0" 1'-6"
5'-8" 5'-8"

Reinforcing Steel
10 Bars #6 ℄ 5'-0" Long (Straight) For Each Pier

ESTIMATED QUANTITIES

Pier #1		Pier #2	
Structure Excavation	152 C.Y.	Structure Excavation	149 C.Y.
Concrete Class "C"	191 C.Y.	Concrete Class "C"	191 C.Y.
Reinforcing Steel	134 lb.	Reinforcing Steel	134 lb.

Surveyed by
Designed by C.H.K.
Drawn by C.H.K.
Traced by H.W.S.
Checked by H.E.S.
Series F.A.P. No. 23 Cont.-2 Road
Sheet 75 Bridge

CONCRETE GENERAL NOTES

1. ALL EXPOSED EDGES OF CONCRETE SHALL BE CHAMFERED 1" x 1"
2. REINFORCING STEEL SIZE AND SPACING SHOWN IN THE PLANS IS BASED ON 60 KSI STEEL, UNLESS NOTED OTHERWISE. WITH THE ENGINEER'S PERMISSION, BAR SIZE AND SPACING MAY BE MODIFIED ACCORDING TO THE LATEST AASHTO LRFD BRIDGE DESIGN SPECIFICATION AND STRUCTURES DESIGN MANUAL WHEN USING HIGHER STRENGTH STEEL.

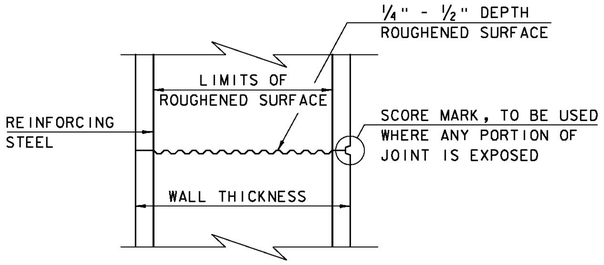

TYPICAL HORIZONTAL CONSTRUCTION JOINT
(NOT TO SCALE)

1. THE SURFACE OF THE CONCRETE CONSTRUCTION JOINTS SHALL BE CLEANED AND FREE OF LAITANCE.
2. IMMEDIATELY BEFORE NEW CONCRETE IS PLACED, ALL CONSTRUCTION JOINTS SHALL BE WETTED AND STANDING WATER REMOVED.

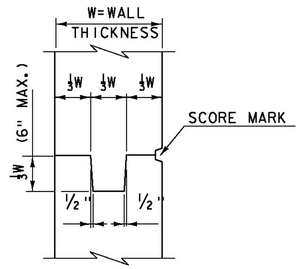

TYPICAL CONCRETE CONSTRUCTION JOINT
(NOT TO SCALE)

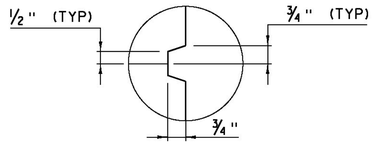

SCORE MARK DETAIL
(NOT TO SCALE)

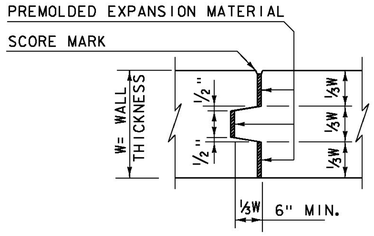

TYPICAL CONCRETE EXPANSION JOINT
(NOT TO SCALE)

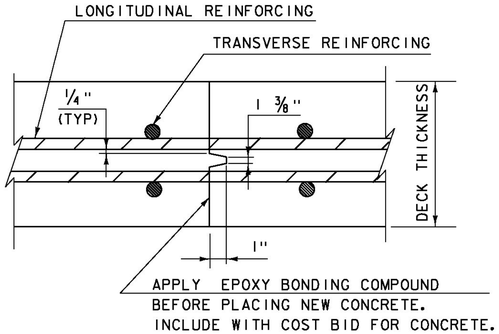

TRANSVERSE BRIDGE SLAB CONSTRUCTION JOINT DETAILS
(NOT TO SCALE)

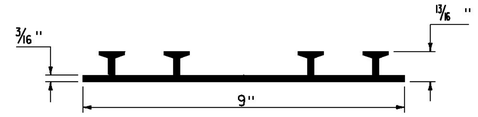

P.V.C. WATERSTOP FOR CONSTRUCTION JOINTS
(NOT TO SCALE)

PAYMENT FOR THE P.V.C. WATERSTOP SHALL BE INCIDENTAL TO THE UNIT BID PRICE FOR THE ADJACENT CONCRETE.

OTHER CONFIGURATIONS OF WATERSTOP MAY BE USED UPON APPROVAL OF THE ENGINEER.

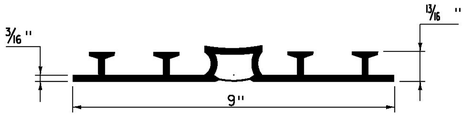

P.V.C. WATERSTOP FOR EXPANSION JOINTS
(NOT TO SCALE)

PAYMENT FOR THE P.V.C. WATERSTOP SHALL BE INCIDENTAL TO THE UNIT BID PRICE FOR THE ADJACENT CONCRETE.

OTHER CONFIGURATIONS OF WATERSTOP MAY BE USED UPON APPROVAL OF THE ENGINEER.

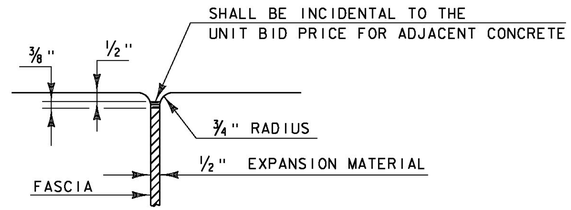

JOINT BETWEEN FASCIA AND WINGWALL
(NOT TO SCALE)

REVISIONS	
MAY 7, 2010	APPROVED FOR USE BY VAOT STRUCTURES SECTION
FEBRUARY 9, 2012	REBAR SUBSTITUTION ALLOWANCE ADDED TO CONCRETE GENERAL NOTES.

CONCRETE DETAILS AND NOTES

VERMONT AGENCY OF TRANSPORTATION
STRUCTURES - SECTION

STRUCTURES DETAIL
SD-501.00

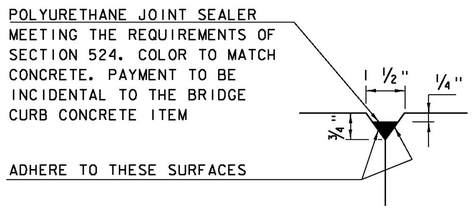

DETAIL "B"
(NOT TO SCALE)

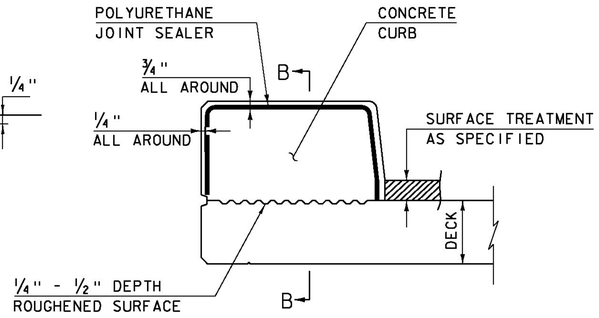

CONCRETE CURB JOINT SECTION
(NOT TO SCALE)

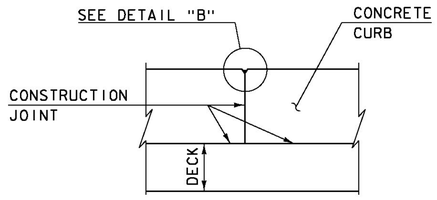

SECTION B - B
(NOT TO SCALE)

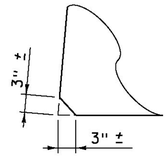

ACUTE ANGLE CLIP DETAIL
(NOT TO SCALE)

1. SEE TYPICAL HORIZONTAL CONSTRUCTION JOINT DETAIL FOR ADDITIONAL INFORMATION

CONCRETE CURB JOINT NOTES

1. CONCRETE CURBS MAY BE PLACED IN ONE CONTINUOUS OPERATION IF AN APPROVED SHRINKAGE REDUCING ADMIXTURE LISTED IN THE SPECIAL PROVISIONS IS USED WITH THE CONCRETE MIX DESIGN. PAYMENT FOR THE SHRINKAGE REDUCING ADMIXTURE WILL BE INCIDENTAL TO THE BRIDGE CURB CONCRETE ITEM.

2. IF THE CONTRACTOR CHOOSES NOT TO USE AN APPROVED SHRINKAGE REDUCING ADMIXTURE, THE CURBS SHALL BE CONSTRUCTED WITH CONSTRUCTION JOINTS SPACED AT A MAXIMUM OF 15'-0" CENTER TO CENTER AND 2'-0" MINIMUM FROM THE CENTER OF NEAREST BRIDGE RAILING POST.

3. ON MULTI-SPAN CONTINUOUS SUPERSTRUCTURES, REGARDLESS OF WHETHER APPROVED SHRINKAGE REDUCING ADMIXTURE IS USED, CURB JOINTS SHALL BE LOCATED OVER THE CENTERLINE OF PIERS AND 7'-0" EACH SIDE OF THE CENTERLINE OF EACH PIER.

4. WHEN CURB JOINTS ARE USED THE CURBS SHALL BE PLACED IN ALTERNATE SECTIONS WITH A MINIMUM OF 48 HOUR DELAY BETWEEN ADJACENT PLACEMENTS.

5. LONGITUDINAL REINFORCING SHALL BE CONTINUOUS THROUGH CURB CONSTRUCTION JOINTS. CURB STIRRUP BARS SHALL BE TURNED AS NECESSARY TO MAINTAIN COVER IN THE FLARED CURB ENDS.

6. THE JOINT SPACING AND DETAILS SHOWN SHALL APPLY TO SIDEWALKS WHEN SHOWN IN THE PLANS.

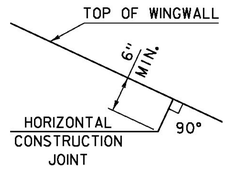

HORIZONTAL WINGWALL CONSTRUCTION JOINT
(NOT TO SCALE)

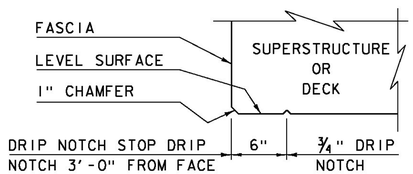

DRIP NOTCH DETAIL
(NOT TO SCALE)

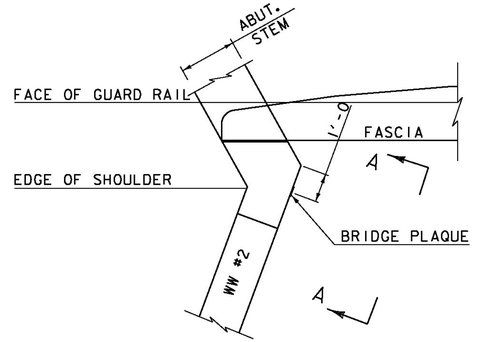

PLAN

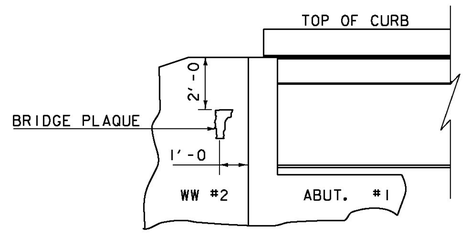

VIEW "A - A"

BRIDGE PLAQUE
(NOT TO SCALE)

THE BRIDGE PLAQUE WILL BE SUPPLIED BY THE AGENCY OF TRANSPORTATION AND SHALL BE INSTALLED BY THE CONTRACTOR AT ABUTMENT #1 ON THE RIGHT SIDE AS SHOWN OR AS DIRECTED BY THE ENGINEER.

PAYMENT FOR INSTALLATION OF THE BRIDGE PLAQUE SHALL BE INCIDENTAL TO THE ADJACENT CONCRETE.

REVISIONS	
MAY 7, 2010	APPROVED FOR USE BY VAOT STRUCTURES SECTION
JUNE 4, 2010	MODIFIED AND ADDED TWO DETAILS
OCTOBER 10, 2012	MODIFIED HORZ. JOINT WINGWALL ADD 6" MIN. DIMENSION

CONCRETE DETAILS AND NOTES

VERMONT AGENCY OF TRANSPORTATION
STRUCTURES - SECTION

STRUCTURES DETAIL
SD-502.00

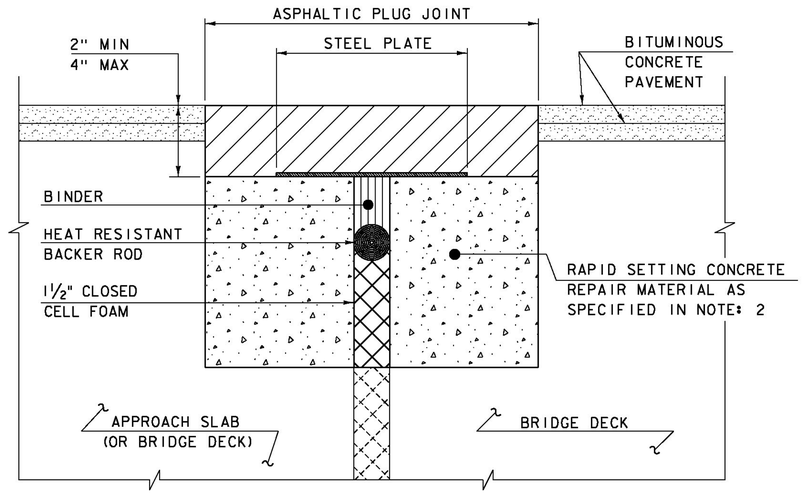

ASPHALTIC PLUG JOINT DETAIL - REHAB

NOTES:

1. THE CONTRACTOR SHALL REMOVE ALL ASPHALTIC PLUG JOINT MATERIAL AND DETERIORATED CONCRETE AS DIRECTED BY THE ENGINEER. REMOVAL OF THE FIRST 4 INCHES OF MATERIAL SHALL BE INCLUDED IN THE BID PRICE FOR ITEM 516.10 BRIDGE EXPANSION JOINT, ASPHALTIC PLUG. ANY REMOVAL OF MATERIAL GREATER THAN 4 INCHES SHALL BE INCLUDED IN THE BID PRICE OF ITEM 580.20 RAPID SETTING CONCRETE REPAIR MATERIAL WITH COARSE AGGREGATE.

2. THE CONTRACTOR SHALL REPLACE REMOVED MATERIAL THAT IS LESS THAN 4" FROM FINISHED GRADE WITH ASPHALTIC PLUG JOINT MATERIAL MEETING THE REQUIREMENTS OF SUBSECTION 707.15. ALL REMOVED MATERIAL THAT IS GREATER THAN 4 INCHES FROM FINISHED GRADE SHALL BE REPLACED WITH RAPID SETTING CONCRETE REPAIR MATERIAL WITH COARSE AGGREGATE MEETING THE REQUIREMENTS OF SUBSECTION 780.04.

3. REINFORCING STEEL NOT SHOWN FOR CLARITY.

4. PLACE 1/4" THICK BY 8" WIDE SECTIONS OF STEEL PLATE OVER THE CENTER OF THE MOVEMENT GAP. SECURE THE PLATES FROM MOVING BY INSERTING LOCATING PINS THROUGH THE PRE-STAMPED HOLES INTO BACKER ROD AND COVER WITH HOT BINDER. THE STEEL PLATES MAY BE OMITTED WHERE THE ENGINEER DETERMINES THAT THE APPROACH SLAB OR BRIDGE DECK WILL PROVIDE INADEQUATE SUPPORT AND WHERE VERTICAL MOVEMENT OF THE PLATES MIGHT OCCUR.

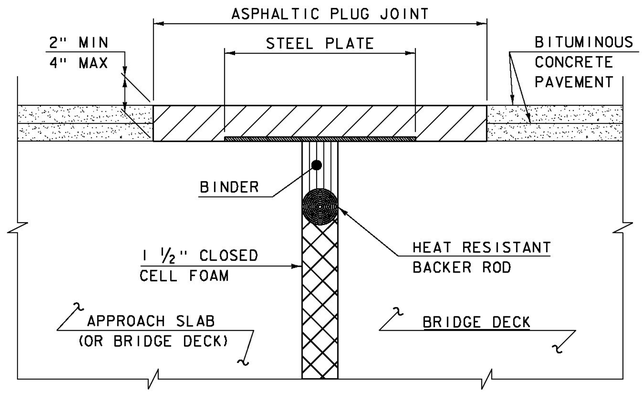

ASPHALTIC PLUG JOINT DETAIL "A" - NEW

NOTE:
PLACE 1/4" THICK BY 8" WIDE SECTIONS OF STEEL PLATE OVER THE CENTER OF THE MOVEMENT GAP. SECURE THE PLATES FROM MOVING BY INSERTING LOCATING PINS THROUGH THE PRE-STAMPED HOLES INTO BACKER ROD AND COVER WITH HOT BINDER.

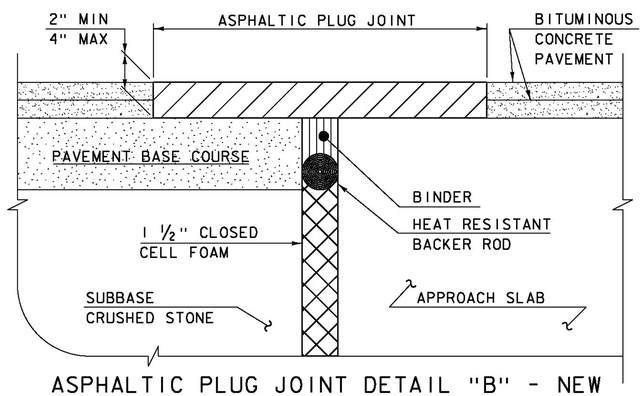

ASPHALTIC PLUG JOINT DETAIL "B" - NEW

ASPHALTIC PLUG JOINT NOTES

INSTALLATION:

1. LOCATE THE JOINT CENTRALLY OVER THE DECK OVERLAY EXPANSION GAP OR FIXED JOINT, MARKED OUT TO THE MANUFACTURER'S RECOMMENDED WIDTH.
2. REMOVE THE BITUMINOUS CONCRETE PAVEMENT FULL DEPTH AS SHOWN ON THE PLANS. THE PAVEMENT SHALL BE DRY AND SAW CUT TO THE LIMITS REQUIRED TO PLACE THE JOINT. A PNEUMATIC HAMMER AND CHISEL MAY BE USED ADJACENT TO THE CURB ONLY WHEN SAW CUTTING IS NOT POSSIBLE.
3. BLAST CLEAN THE JOINT AREA OF DEBRIS, ASPHALT AND SHEET MEMBRANE. THOROUGHLY DRY THE JOINT AREA WITH COMPRESSED AIR PRIOR TO APPLYING BINDER MATERIAL.
4. PLACE PROPERLY SIZED HEAT RESISTANT BACKER ROD IN THE MOVEMENT GAP ALLOWING FOR 1" +/- OF BINDER ABOVE THE ROD.
5. HEAT AND PLACE THE BINDER MATERIAL AS RECOMMENDED BY THE MANUFACTURER.
6. IMMEDIATELY AFTER TOP COATING, CAST AN ANTI-SKID MATERIAL OVER THE JOINT TO REDUCE THE RISK OF TRACKING.

WEATHER LIMITATIONS

APPLY BINDER MATERIAL ONLY WHEN THE FOLLOWING CONDITIONS PREVAIL OR AS RECOMMENDED BY THE MANUFACTURER:

1. THE AMBIENT AIR TEMPERATURE IS AT LEAST 10 DEG C (50 DEG F) AND RISING.
2. THE ROAD SURFACE IS DRY.
3. WEATHER CONDITIONS OR OTHER CONDITIONS ARE FAVORABLE AND ARE EXPECTED TO REMAIN SO FOR THE PERFORMANCE OF SATISFACTORY WORK.

DETAILS ON THIS SHEET ARE NOT TO SCALE.

REVISIONS	
MAY 7, 2010	APPROVED FOR USE BY VAOT STRUCTURES SECTION
AUGUST 29, 2011	ADD DETAIL "B" AND REV. NOTES

BRIDGE JOINT
ASPHALTIC PLUG

VERMONT AGENCY OF TRANSPORTATION
STRUCTURES - DIVISION

STRUCTURES DETAIL
SD-516.10

STRUCTURAL STEEL GENERAL NOTES:

1. ALL FIELD CONNECTIONS SHALL BE MADE WITH 7/8" DIAMETER HIGH-STRENGTH BOLTS IN 15/16" DIAMETER HOLES, PER SUBSECTION 506.19, UNLESS OTHERWISE SPECIFIED.
2. ALL HOLES IN THE WEBS OF THE FASCIA GIRDERS THAT ARE NOT OTHERWISE FILLED, SHALL BE FILLED WITH EITHER BUTTON HEAD OR HEX HEAD BOLTS. THESE BOLTS SHALL BE TIGHTENED IN ACCORDANCE WITH SUBSECTION 506.19.
3. ALL WELDING SHALL CONFORM TO THE PROVISIONS OF SUBSECTION 506.10.
4. ANY CONNECTIONS THAT ARE NOT DETAILED ON THE PLANS SHALL BE DETAILED BY THE FABRICATOR AND SUBMITTED TO THE STRUCTURES ENGINEER FOR APPROVAL.
5. STRUCTURAL STEEL MEMBERS DESIGNATED "CVN" IN THE PLANS SHALL BE CHARPY V-NOTCH TESTED IN ACCORDANCE WITH SUBSECTION 714.01 OF THE STANDARD SPECIFICATIONS.
6. ENDS OF GIRDERS ARE TO BE VERTICAL IN THEIR FINAL POSITION.
7. AFTER SUPERSTRUCTURE STEEL HAS BEEN ERECTED, ELEVATIONS ALONG THE TOP OF THE GIRDERS SHALL BE TAKEN AS DIRECTED BY THE RESIDENT ENGINEER FOR USE IN DETERMINING FINISHED GRADES.

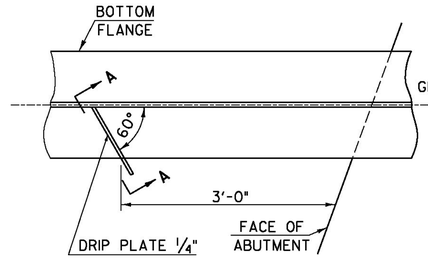

PLAN DRIP PLATE

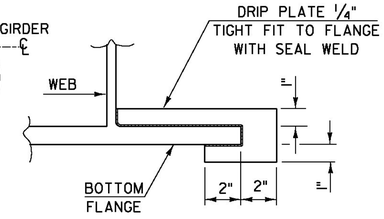

SECTION A - A

NOTE: DRIP PLATES SHALL BE PLACED ON OUTSIDE EDGE OF FASCIA GIRDERS ON THE HIGH SIDE OF ALL PIERS AND ABUTMENTS OR AS INDICATED ON PROJECT PLANS.

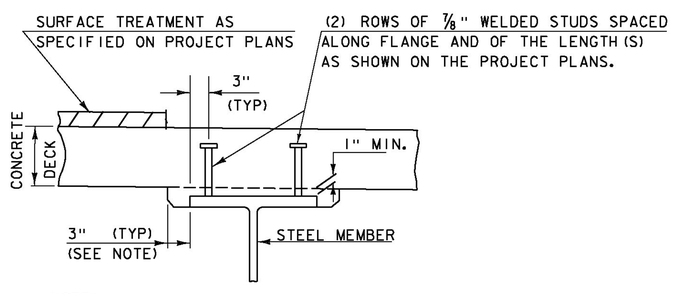

NOTE:
THE 3" HORIZONTAL SECTION MAY BE ELIMINATED FOR FORMING SYSTEMS DESIGNED FOR THE CONSTRUCTION OF VERTICAL HAUNCHES. ANY VOIDS RESULTING FROM FORMING SYSTEM ELEMENTS SHALL BE FILLED WITH JOINT SEALER, POLYURETHANE MEETING THE REQUIREMENTS OF SECTION 524. THE COST OF THE JOINT SEALER, POLYURETHANE SHALL BE INCIDENTAL TO THE ADJACENT CONCRETE.

HAUNCH AND SHEAR CONNECTOR DETAIL

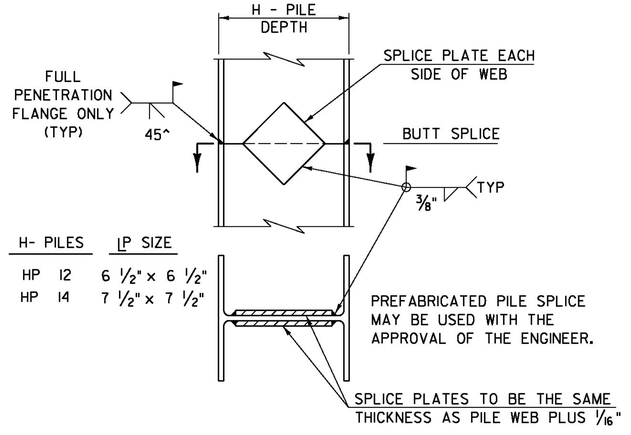

H- PILES	LP SIZE
HP 12	6 1/2" x 6 1/2"
HP 14	7 1/2" x 7 1/2"

DETAIL OF PILE SPLICE

DETAILS ON THIS SHEET ARE "NOT TO SCALE" UNLESS NOTED OTHERWISE.

REVISIONS	
MAY 7, 2010	APPROVED FOR USE BY VAOT STRUCTURES SECTION
JUNE 4, 2010	MODIFIED NOTES

STRUCTURAL STEEL DETAILS & NOTES

VERMONT AGENCY OF TRANSPORTATION
STRUCTURES - SECTION

STRUCTURES DETAIL
SD-601.00

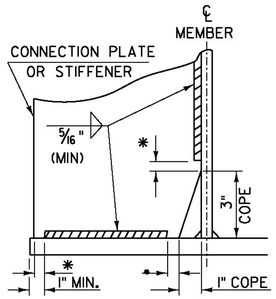

WELD TERMINATION AND COPING DETAILS FOR STEEL MEMBERS

*NO WELD FOR 3/8" MIN. 7/8" MAX. (EXCEPT MUST MAINTAIN 1" MINIMUM FROM EDGE OF FLANGE)

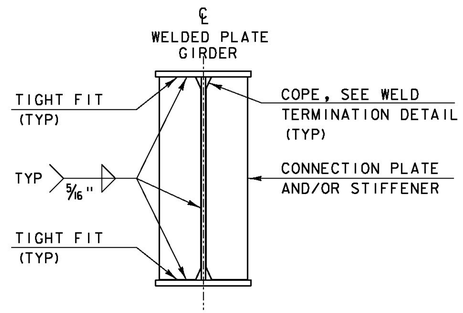

INTERMEDIATE CONNECTION PLATES AND/OR STIFFENERS FOR WELDED PLATE GIRDERS

INTERMEDIATE DETAIL IS ONLY USED WHEN PLATE DOES NOT OCCUR AT AN ABUTMENT OR PIER.

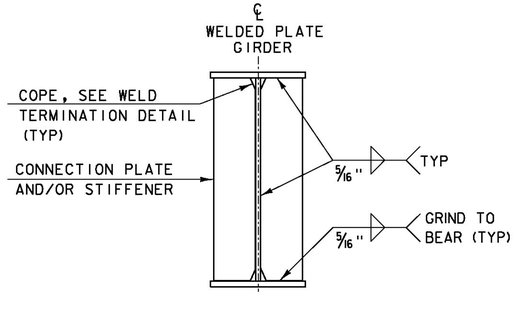

ABUTMENT BEARING STIFFENERS AND/OR CONNECTION PLATES FOR WELDED PLATE GIRDERS

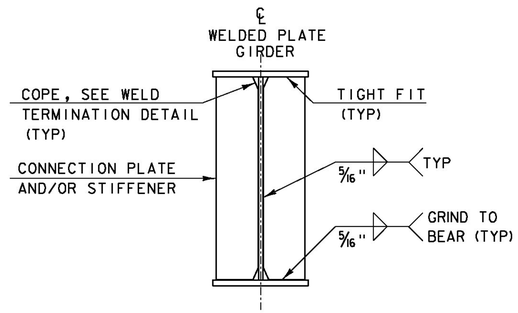

PIER BEARING STIFFENERS AND/OR CONNECTION PLATES FOR WELDED PLATE GIRDERS

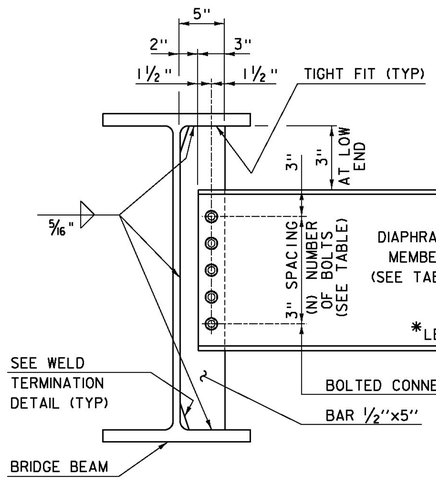

DEPTH		DIAPHRAGM MEMBER	(N) BOLTS
ROLLED BEAM	24" 30"	C15x33.9	4
	31" 36"	MC18x42.7	5
	37" 42"	W21x44	6
PLATE GIRDER WEB	31" 36"	W27x84	7
	37" 42"	W33x118	9
	43" 48"	W36x135	10

INTERMEDIATE DIAPHRAGMS FOR 24" TO 48" BRIDGE BEAMS

*IF CLEARANCE CANNOT BE MET, DIAPHRAGM MAY BE SLOPED.

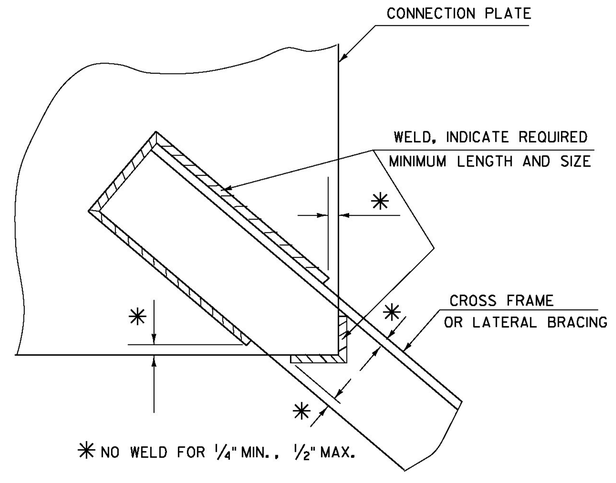

WELD LOCATION DETAIL AT CROSS FRAMES AND LATERAL BRACING

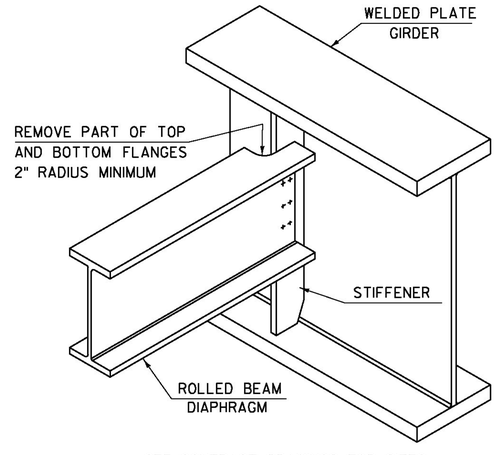

SEE CONTRACT DRAWINGS FOR SIZES OF MEMBERS AND CONNECTION DETAILS

ROLLED BEAM USED AS DIAPHRAGM

DETAILS ON THIS SHEET ARE "NOT TO SCALE" UNLESS NOTED OTHERWISE.

REVISIONS	
MAY 7, 2010	APPROVED FOR USE BY VAOT STRUCTURES SECTION
MAY 2, 2011	ADD INTERMEDIATE DIAPHRAGMS DETAIL & ADD NOT TO SCALE NOTE

STRUCTURAL STEEL PLATE GIRDER DETAILS AND NOTES

VERMONT AGENCY OF TRANSPORTATION
STRUCTURES - SECTION

STRUCTURES DETAIL
SD-602.00

GENERAL NOTES:

1. MATERIALS SHALL CONFORM TO STATE OF VERMONT, AGENCY OF TRANSPORTATION STANDARD SPECIFICATIONS FOR CONSTRUCTION, DATED 2011 AND THE LATEST REVISIONS, INCLUDING SUPPLEMENTARY SPECIFICATIONS, CONTRACT PLANS, AND THE SPECIAL PROVISIONS. GENERAL SHOP PRACTICES, STRUCTURAL FABRICATION, WELDING AND ASSEMBLY SHALL BE GOVERNED BY ANSI/AASHTO/AWS D1.5 BRIDGE WELDING CODE.

2. THESE SHOP DRAWINGS WERE PREPARED IN ACCORDANCE WITH THE CONTRACT PLANS AND SPECIFICATIONS. THE D.S. BROWN COMPANY DOES NOT ACCEPT LIABILITY FOR THE DESIGN OF THE PRODUCTS DETAILED IN THESE SHOP DRAWINGS.

3. THE D.S. BROWN COMPANY TO SUPPLY ONLY THE PARTS SHOWN ON THESE SHOP DRAWINGS.

4. THE BEARINGS SHALL BE SUBJECT TO RANDOM IN-HOUSE ELASTOMER TESTING AND IN-HOUSE PROOF LOAD TESTING IN ACCORDANCE WITH AASHTO LRFD BRIDGE DESIGN SPECIFICATIONS, SECTION 14 (METHOD 'B') AND AASHTO LRFD CONSTRUCTION SPECIFICATIONS SECTION 18.

5. BEARINGS SHALL BE TESTED IN ACCORDANCE WITH THE SPECIAL PROVISIONS.

6. ALL STEEL SHALL BE PRODUCED IN THE UNITED STATES OF AMERICA.

7. ALL CORNERS AND EDGES OF STEEL PLATES SHALL BE GROUND TO A 1/16" RADIUS FOR GALVANIZING.

8. ALL EXTERNAL STEEL SHALL BE GALVANIZED IN ACCORDANCE WITH AASHTO M111 AND M232 (ASTM 123 & 153) SPECIFICATIONS. IN ACCORDANCE WITH SECTION 726.08 OF THE STANDARD SPECIFICATIONS, REPAIR DAMAGED HOT DIPPED GALVANIZING PER ASTM A780, ANNEX A2. THE PAINT USED IN THE REPAIR SHALL BE ORGANIC-ZINC, CONTAINING 92% MINIMUM ZINC BY WEIGHT IN THE DRY FILM. THE PAINT SHALL BE APPLIED PER MANUFACTURER'S RECOMMENDATIONS TO A THICKNESS EQUIVALENT TO THE SURROUNDING GALVANIZING.

9. GALVANIZATION LIFTING DEVICES MAY BE WELDED TO PARTS IF NECESSARY. WHEN THEIR USE IS COMPLETE, REMOVE AND GRIND FLUSH ALL CONNECTION LOCATIONS. REPAIR AREA PER ASTM A780, ANNEX A2.

10. BEARING MANUFACTURING FACILITY AND REPRESENTATIVE FOR COORDINATING PRODUCTION:
    THE D.S. BROWN COMPANY
    300 EAST CHERRY STREET
    NORTH BALTIMORE, OHIO 45872
    CSR - MARCIE MCKINNON - (419) 257-3561

TOLERANCE TABLE	
DESCRIPTION	TOLERANCE (INCHES U.N.O.)
ELASTOMERIC BEARING DESIGN THICKNESS ≤ 1.250"	-0, +0.1181
ELASTOMERIC BEARING DESIGN THICKNESS > 1.250"	-0, +0.2362
ELASTOMERIC BEARING PLAN DIMENSIONS ≤ 36"	-0, +0.2362
ELASTOMERIC BEARING PLAN DIMENSIONS > 36"	-0, +0.4724
THICKNESS OF INDIVIDUAL LAYERS OF ELASTOMER (LAMINATED BEARINGS ONLY) AT ANY POINT WITHIN THE BEARING	±0.1181
VARIATION FROM A PLANE PARALLEL TO THE THEORETICAL SURFACE (AS DETERMINED BY MEASUREMENTS AT THE EDGE OF THE BEARINGS) (PARALLELISM):	
TOP & BOTTOM	±0.005 RAD
SIDES	±0.2362
POSITION OF EXPOSED CONNECTION MEMBERS	±0.1181
ELASTOMERIC COVER: TOP & BOTTOM	-0, +0.1181
ELASTOMERIC COVER: SIDES	-0, +0.1181
ELASTOMERIC BEARING HOLE OR SLOT SIZE	±0.1181
ELASTOMERIC BEARING HOLE OR SLOT LOCATION	±0.1181
STEEL PLATE THICKNESS	±0.063
STEEL PLATE PLAN DIMENSIONS ≤ 30"	±0.250
STEEL PLATE PLAN DIMENSIONS > 30"	±0.250
STEEL PLATE FLATNESS IN CONTACT WITH BEARING	0.001 X NOM. DIMENSION *
STEEL PLATE FLATNESS: STEEL GIRDER SIDE	0.002 X NOM. DIMENSION *
STEEL PLATE SURFACE FINISH IN CONTACT WITH BEARING	125 μ" RMS *
BEVEL SLOPE	±0.002 RAD
ANCHOR HOLE OR SLOT SIZE	±1/8
ANCHOR HOLE OR SLOT LOCATION	±1/8
* PRIOR TO GALVANIZATION	

MARKING NOTES:

1. EACH BEARING SHALL BE PERMANENTLY MARKED. THE MARKING SHALL CONSIST OF THE ORDER NUMBER, LOT NUMBER, PAD IDENTIFICATION NUMBER, UP STATION AND ELASTOMER TYPE AND GRADE. WHERE POSSIBLE, THE MARKING SHALL BE ON A FACE WHICH IS VISIBLE AFTER ERECTION OF THE STRUCTURE.

2. MARK THE THICKER EDGE OF THE BEVELED PLATE FOR IDENTIFICATION IN THE FIELD.

CONTRACTOR NOTES:

1. WELDING PROCEDURES SHALL BE ESTABLISHED BY THE CONTRACTOR TO RESTRICT THE TEMPERATURE TO A MAXIMUM OF 200°F (93°C) FOR SURFACES IN CONTACT WITH THE ELASTOMER. TEMPERATURES SHALL BE DETERMINED BY TEMPERATURE INDICATING WAX PENCILS OR OTHER SUITABLE MEANS.

T.Y. LIN INTERNATIONAL

THE STAMPED DOCUMENTS ARE HEREBY:

____ APPROVED
__X__ APPROVED AS NOTED
____ REVISE AND RESUBMIT

SEE TRANSMITTAL FOR ADDITIONAL INFORMATION AS APPLICABLE.

THIS REVIEW IS FOR GENERAL CONFORMANCE WITH DESIGN CONCEPT ONLY. ANY DEVIATION FROM THE PLANS OR SPECIFICATIONS NOT CLEARLY NOTED BY THE CONTRACTOR HAS NOT BEEN REVIEWED. REVIEW BY THE ENGINEER SHALL NOT RELIEVE THE CONTRACTOR OF THE CONTRACTUAL RESPONSIBILITY FOR ANY ERRORS OR DEVIATION FROM THE CONTRACT REQUIREMENTS.

RICK HEBERT — REVIEWER
1/21/2015 — DATE

REV.	DESCRIPTION	DATE	DET.	CKD.

D.S. BROWN
A GIBRALTAR INDUSTRIES COMPANY
THE D.S. BROWN COMPANY
300 E. CHERRY STREET
NORTH BALTIMORE, OHIO 45872
419.257.3561
FAX: 419.257.0332
WWW.DSBROWN.COM

	ITEM	QUANTITY
LOCATION — BENMONT AVE. (TH-7) (URBAN MINOR ARTERIAL)	-	-
BRIDGE — 57	-	-
PROJECT NAME — BENNINGTON	-	-
PROJECT NO. — BRF 1000 (16)	-	-
P.O. NO. — 2014-086-004	-	-
DESIGNER — TY-LIN INTERNATIONAL	-	-
CUSTOMER — ALPINE CONSTRUCTION, LLC	-	-
	-	-

DESCRIPTION: GENERAL NOTES
BENNINGTON COUNTY, VT

SCALE:	DRAWN BY:	CHECKED BY:	DATE:	
N.T.S.	SP	EAK	1/15	-
PROJECT NUMBER	PRODUCT CODE		RELEASE	SHEET
45651	1104		-	GN1

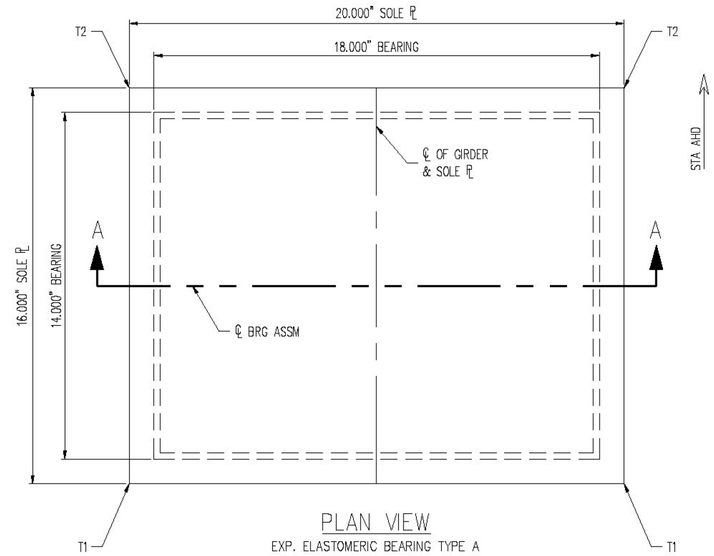

PLAN VIEW

EXP. ELASTOMERIC BEARING TYPE A
(2) REQ'D @ PIER 1; G1, G5
(2) REQ'D @ PIER 2; G1, G5
(2) SAMPLE BEARINGS W/O EXT. STEEL REQ'D

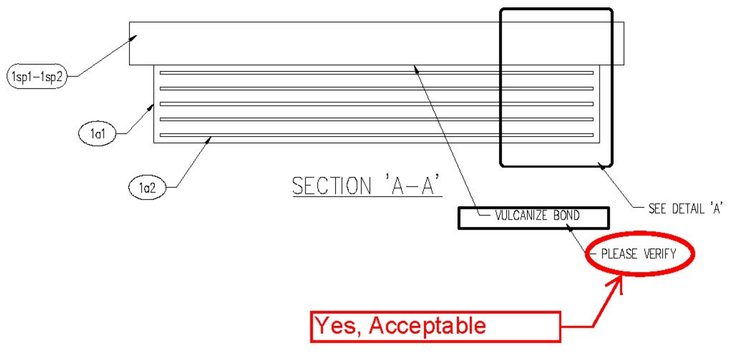

SECTION 'A–A'

BEARING SCHEDULE				
LOCATION	SOLE ℄ PC MK	QTY	T1	T2
PIER 1; G1, G5	1sp1	2	1.691"	1.809"
PIER 2; G1, G5	1sp2	2	1.834"	1.666"

MK	QTY	DESCRIPTION	MATERIAL	LENGTH	REMARKS	WT*	REV
1A	2	VERSIFLEX ELASTOMERIC BEARING	45651.1104.1			236	
1a1	2	3.125" X 18.000"	NATURAL RUBBER	14.000"	60+/–5 DURO GR.4	32	
1a2	10	11 GA. X 17.500"	A1011 GR 50	13.500"	PLAIN	8	
1sp1	2	1.809" X 20.000"	M270 GR 50W (A709)	16.000"	M111–HDG (A123)	164	
1B	2	VERSIFLEX ELASTOMERIC BEARING				238	
1a1	2	3.125" X 18.000"	NATURAL RUBBER	14.000"	60+/–5 DURO GR.4	32	
1a2	10	11 GA. X 17.500"	A1011 GR 50	13.500"	PLAIN	8	
1sp2	2	1.834" X 20.000"	M270 GR 50W (A709)	16.000"	M111–HDG (A123)	166	
1C	2	SAMPLE BEARING	45651.1103.1			72	
1a1	2	3.125" X 18.000"	NATURAL RUBBER	14.000"	60+/–5 DURO GR.4	32	
1a2	10	11 GA. X 17.500"	A1011 GR 50	13.500"	PLAIN	8	
		*Approx. Gross Wt. Lbs Per Single Unit			1/5/15 2:37:03 PM		

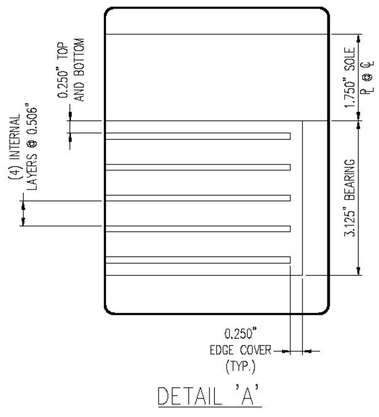

DETAIL 'A'

T.Y. LIN INTERNATIONAL

THE STAMPED DOCUMENTS ARE HEREBY:

____ APPROVED
__X__ APPROVED AS NOTED
____ REVISE AND RESUBMIT

SEE TRANSMITTAL FOR ADDITIONAL INFORMATION AS APPLICABLE.

THIS REVIEW IS FOR GENERAL CONFORMANCE WITH DESIGN CONCEPT ONLY. ANY DEVIATION FROM THE PLANS OR SPECIFICATIONS NOT CLEARLY NOTED BY THE CONTRACTOR HAS NOT BEEN REVIEWED. REVIEW BY THE ENGINEER SHALL NOT RELIEVE THE CONTRACTOR OF THE CONTRACTUAL RESPONSIBILITY FOR ANY ERRORS OR DEVIATION FROM THE CONTRACT REQUIREMENTS.

RICK HEBERT — REVIEWER
1/21/2015 — DATE

SEE SHEET 45651-1104-GN1 FOR GENERAL NOTES

REV.	DESCRIPTION	DATE	DET.	CKD.

D.S. BROWN
A GIBRALTAR INDUSTRIES COMPANY
THE D.S. BROWN COMPANY
300 E. CHERRY STREET
NORTH BALTIMORE, OHIO 45872
419.257.3561
FAX: 419.257.0332
WWW.DSBROWN.COM

ITEM	QUANTITY
LOCATION — BENMONT AVE. (TH-7) (URBAN MINOR ARTERIAL)	–
BRIDGE — 57	–
PROJECT NAME — BENNINGTON	–
PROJECT NO. — BRF 1000 (16)	–
P.O. NO. — 2014-086-004	–
DESIGNER — TY-LIN INTERNATIONAL	–
CUSTOMER — ALPINE CONSTRUCTION, LLC	–
	–

DESCRIPTION: VERSIFLEX ELASTOMERIC BEARING
BENNINGTON COUNTY, VT

SCALE:	DRAWN BY:	CHECKED BY:	DATE:	
N.T.S.	SP	EAK	1/15	–
PROJECT NUMBER		PRODUCT CODE	RELEASE	SHEET
45651		1104	–	01

MK	QTY	DESCRIPTION	MATERIAL	LENGTH	REMARKS	WT*	REV
2A	3	VERSIFLEX ELASTOMERIC BEARING	45651.1104.2			376	
2a1	3	3.125" X 18.000"	NATURAL RUBBER	14.000"	60+/-5 DURO GR.4	32	
2a2	15	11 GA. X 17.500"	A1011 GR 50	13.500"	PLAIN	8	
2sb1	6	2.500" X 5.000"	M270 GR 50W (A709)	7.000"	M111-HDG (A123)	25	
2sp1	3	1.809" X 31.000"	M270 GR 50W (A709)	16.000"	M111-HDG (A123)	254	
2B	3	VERSIFLEX ELASTOMERIC BEARING				379	
2a1	3	3.125" X 18.000"	NATURAL RUBBER	14.000"	60+/-5 DURO GR.4	32	
2a2	15	11 GA. X 17.500"	A1011 GR 50	13.500"	PLAIN	8	
2sb1	6	2.500" X 5.000"	M270 GR 50W (A709)	7.000"	M111-HDG (A123)	25	
2sp2	3	1.834" X 31.000"	M270 GR 50W (A709)	16.000"	M111-HDG (A123)	258	
		*Approx. Gross Wt. Lbs Per Single Unit			1/5/15 2:37:03 PM		

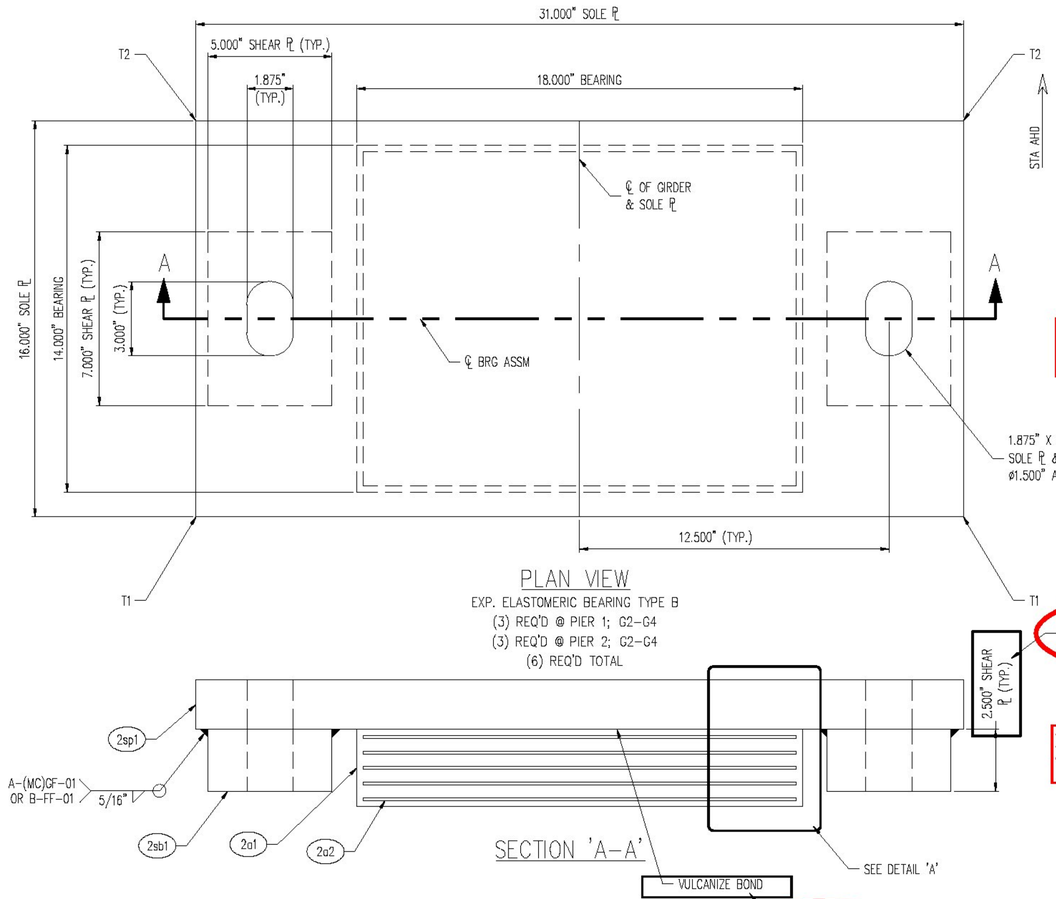

PLAN VIEW

EXP. ELASTOMERIC BEARING TYPE B
(3) REQ'D @ PIER 1; G2-G4
(3) REQ'D @ PIER 2; G2-G4
(6) REQ'D TOTAL

SECTION 'A-A'

BEARING SCHEDULE				
LOCATION	SOLE ℄ PC MK	QTY	T1	T2
PIER 1; G2-G4	2sp1	2	1.691"	1.809"
PIER 2; G2-G4	2sp2	2	1.834"	1.666"

Check Quantity. 3 each?

PLEASE VERIFY. CONFLICT W/ SECTION (TYPE B) & SLOTTED SHEAR PLATE DETAIL

2.5" Shear Plate Thickness is correct

PLEASE VERIFY

Yes, Acceptable

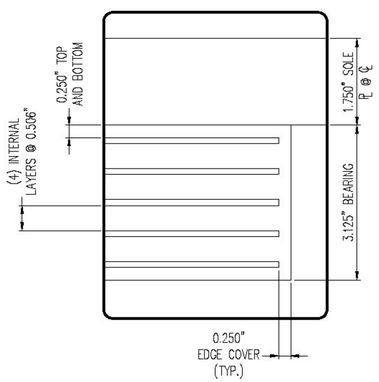

DETAIL 'A'

T.Y. LIN INTERNATIONAL

THE STAMPED DOCUMENTS ARE HEREBY:

___ APPROVED
_X_ APPROVED AS NOTED
___ REVISE AND RESUBMIT

SEE TRANSMITTAL FOR ADDITIONAL INFORMATION AS APPLICABLE.

THIS REVIEW IS FOR GENERAL CONFORMANCE WITH DESIGN CONCEPT ONLY. ANY DEVIATION FROM THE PLANS OR SPECIFICATIONS NOT CLEARLY NOTED BY THE CONTRACTOR HAS NOT BEEN REVIEWED. REVIEW BY THE ENGINEER SHALL NOT RELIEVE THE CONTRACTOR OF THE CONTRACTUAL RESPONSIBILITY FOR ANY ERRORS OR DEVIATION FROM THE CONTRACT REQUIREMENTS.

RICK HEBERT — REVIEWER
1/21/2015 — DATE

SEE SHEET 45651-1104-GN1 FOR GENERAL NOTES
SEE SHEET 45651-1104-03 FOR ANCHOR ROD ASSEMBLY

REV.	DESCRIPTION	DATE	DET.	CKD.

D.S. BROWN
A GIBRALTAR INDUSTRIES COMPANY
THE D.S. BROWN COMPANY
300 E. CHERRY STREET
NORTH BALTIMORE, OHIO 45872
419.257.3561
FAX: 419.257.0332
WWW.DSBROWN.COM

	ITEM	QUANTITY
LOCATION — BENMONT AVE. (TH-7) (URBAN MINOR ARTERIAL)	–	–
BRIDGE — 57	–	–
PROJECT NAME — BENNINGTON	–	–
PROJECT NO. — BRF 1000 (16)	–	–
P.O. NO. — 2014-086-004	–	–
DESIGNER — TY-LIN INTERNATIONAL	–	–
CUSTOMER — ALPINE CONSTRUCTION, LLC	–	–
	–	–

DESCRIPTION: VERSIFLEX ELASTOMERIC BEARING
BENNINGTON COUNTY, VT

SCALE:	DRAWN BY:	CHECKED BY:	DATE:	
N.T.S.	SP	EAK	1/15	–
PROJECT NUMBER	PRODUCT CODE	RELEASE	SHEET	
45651	1104	–	02	

MK	QTY	DESCRIPTION	MATERIAL	LENGTH	REMARKS	WT*	REV
3A	12	SINGLE END ROD				13	
3ar1	12	Ø1.500" X 25.000" SINGLE END ROD	M314 GR 55 (F1554)		8" THRD; M232-HDG (A153)	13	
3B	24	HEX NUT				1	
3hn1	24	Ø1.500" HEX NUT	M291-DH OR M292-2H (A563 OR A194) HEAVY HEX		M232-HDG (A153), DRY LUBE & DYE	1	
3C	12	WASHER PLATE				2	
3wp1	12	0.250" X 7.000"	M183 (A36)	4.000"	Ø1.625" HOLE CTR.; M111-HDG (A123)	2	
		*Approx. Gross Wt. Lbs Per Single Unit			1/5/15 2:37:03 PM		

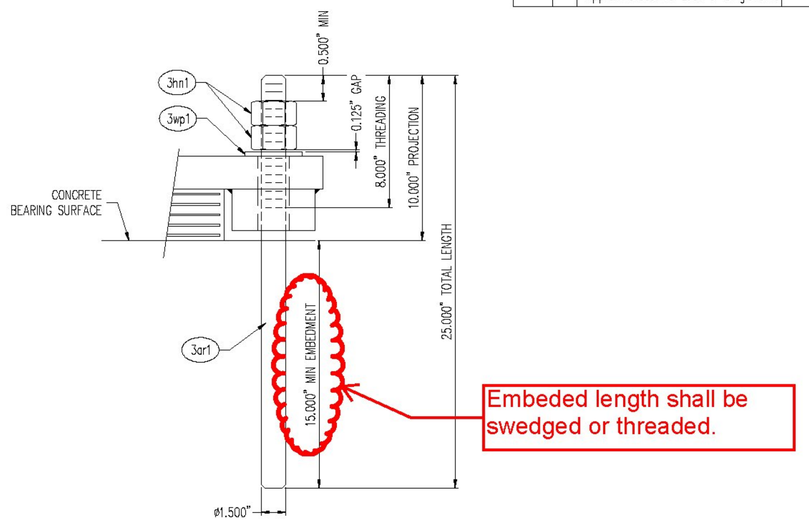

ANCHOR ROD ASSEMBLY

(6) REQ'D @ PIER 1; G2-G4
(6) REQ'D @ PIER 2; G2-G4
(12) REQ'D TOTAL

T.Y. LIN INTERNATIONAL

THE STAMPED DOCUMENTS ARE HEREBY:

____ APPROVED
__X__ APPROVED AS NOTED
____ REVISE AND RESUBMIT

SEE TRANSMITTAL FOR ADDITIONAL INFORMATION AS APPLICABLE.

THIS REVIEW IS FOR GENERAL CONFORMANCE WITH DESIGN CONCEPT ONLY. ANY DEVIATION FROM THE PLANS OR SPECIFICATIONS NOT CLEARLY NOTED BY THE CONTRACTOR HAS NOT BEEN REVIEWED. REVIEW BY THE ENGINEER SHALL NOT RELIEVE THE CONTRACTOR OF THE CONTRACTUAL RESPONSIBILITY FOR ANY ERRORS OR DEVIATION FROM THE CONTRACT REQUIREMENTS.

RICK HEBERT — REVIEWER
1/21/2015 — DATE

SEE SHEET 45651-1104-GN1 FOR GENERAL NOTES

REV.	DESCRIPTION	DATE	DET.	CKD.

D.S. BROWN
A GIBRALTAR INDUSTRIES COMPANY
THE D.S. BROWN COMPANY
300 E. CHERRY STREET
NORTH BALTIMORE, OHIO 45872
419.257.3561
FAX: 419.257.0332
WWW.DSBROWN.COM

ITEM	QUANTITY
LOCATION — BENMONT AVE. (TH-7) (URBAN MINOR ARTERIAL)	–
BRIDGE — 57	–
PROJECT NAME — BENNINGTON	–
PROJECT NO. — BRF 1000 (16)	–
P.O. NO. — 2014-086-004	–
DESIGNER — TY-LIN INTERNATIONAL	–
CUSTOMER — ALPINE CONSTRUCTION, LLC	–
	–

DESCRIPTION: ANCHOR ROD ASSEMBLY
BENNINGTON COUNTY, VT

SCALE:	DRAWN BY:	CHECKED BY:	DATE:	
N.T.S.	SP	EAK	1/15	–
PROJECT NUMBER	PRODUCT CODE	RELEASE	SHEET	
45651	1104	–	03	

GENERAL NOTES

CONSTRUCTION SPECIFICATIONS

1. ALL MATERIAL AND WORKMANSHIP TO BE IN ACCORDANCE WITH THE STATE OF VERMONT AGENCY OF TRANSPORTATION STANDARD SPECIFICATIONS FOR CONSTRUCTION, DATED 2011, WITH ITS LATEST REVISIONS, AND THE AASHTO LRFD BRIDGE DESIGN SPECIFICATIONS, 6TH EDITION WITH INTERIMS THROUGH 2012.

MATERIAL SPECIFICATION

1. ALL STRUCTURAL STEEL SHALL CONFORM TO AASHTO M270 GRADE 50W.
2. MATERIAL NOTED "T2" ON DETAIL DRAWINGS SHALL BE CHARPY V-NOTCH TESTED IN ACCORDANCE WITH SUBSECTION 714.01.
3. HIGH STRENGTH BOLTS SHALL BE ASTM A325, TYPE 3, WITH ASTM A563 DH3 NUTS AND ONE ASTM F436 TYPE 3 WASHER PER BOLT.
   ROTATIONAL CAPACITY TESTING SHALL BE REQUIRED FOR ALL BOLT ASSEMBLIES.

FABRICATION

1. THE BOTTOM FLANGE OF GIRDERS AT BEARINGS SHALL BE SHOP STRAIGHTENED AS REQUIRED TO PROVIDE UNIFORM CONTACT BETWEEN THE GIRDER FLANGE AND THE BEARINGS AT THE BRIDGE SEAT. NOTED AS "BRG. AREA" ON DETAILS.

SHOP WELDING AND TESTING

1. WELDING AND NON-DESTRUCTIVE TESTING SHALL BE IN ACCORDANCE WITH ANSI/AASHTO/AWS BRIDGE WELDING CODE, D1.5 (LATEST EDITION).
2. FOR WELDING CONNECTION PLATES TO GIRDERS SEE "TYP. WELD TERMINATION DETAIL".
3. NON-DESTRUCTIVE TESTING OF WELDS SHALL BE IN ACCORDANCE WITH THE REFERENCED SPECIFICATIONS.

SHOP CLEANING

1. BLAST CLEAN ALL STEEL TO SSPC-SP10 (NEAR WHITE) EITHER BEFORE OR AFTER FABRICATION .

SHOP PAINTING

1. NO PAINT

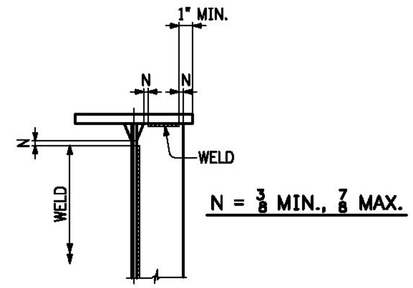

TYP. WELD TERMINATION DETAIL

T.Y. LIN INTERNATIONAL

THE STAMPED DOCUMENTS ARE HEREBY:

__X__ APPROVED
_____ APPROVED AS NOTED
_____ REVISE AND RESUBMIT

SEE TRANSMITTAL FOR ADDITIONAL INFORMATION AS APPLICABLE.

THIS REVIEW IS FOR GENERAL CONFORMANCE WITH DESIGN CONCEPT ONLY. ANY DEVIATION FROM THE PLANS OR SPECIFICATIONS NOT CLEARLY NOTED BY THE CONTRACTOR HAS NOT BEEN REVIEWED. REVIEW BY THE ENGINEER SHALL NOT RELIEVE THE CONTRACTOR OF THE CONTRACTUAL RESPONSIBILITY FOR ANY ERRORS OR DEVIATION FROM THE CONTRACT REQUIREMENTS.

RICK HEBERT — REVIEWER
2/2/2015 — DATE

NO.	DATE	REMARKS	BY

REVISIONS

CASCO BAY STEEL STRUCTURES
ONE WALLACE AVENUE
SOUTH PORTLAND, ME 04106
PHONE: 207-780-6722
FAX: 207-780-6726

STRUCTURE	BENMONT AVE. (TH-7) (URBAN MINOR ARTERIAL)
LOCATION	TOWN OF BENNINGTON, VERMONT
PROJECT NO.	BRIDGE NO. 57 PROJECT NO. BRF 1000(16)
ENGINEER	STATE OF VERMONT AGENCY OF TRANSPORTATION
CUSTOMER	ALPINE CONSTRUCTION
ITEM	GENERAL NOTES
SURFACE PREP.	OPEN HOLES
PAINT	

APPROVAL	DRAWN DMM 12-19-14		SHEET NO.	JOB NO.
SHOP	CHECKED PM 12-31-14		GN1	605

1411-22 GN-1411

Sheet GN1 - Plotted: 01/06/2015 @ 08:54 (HEATHER)

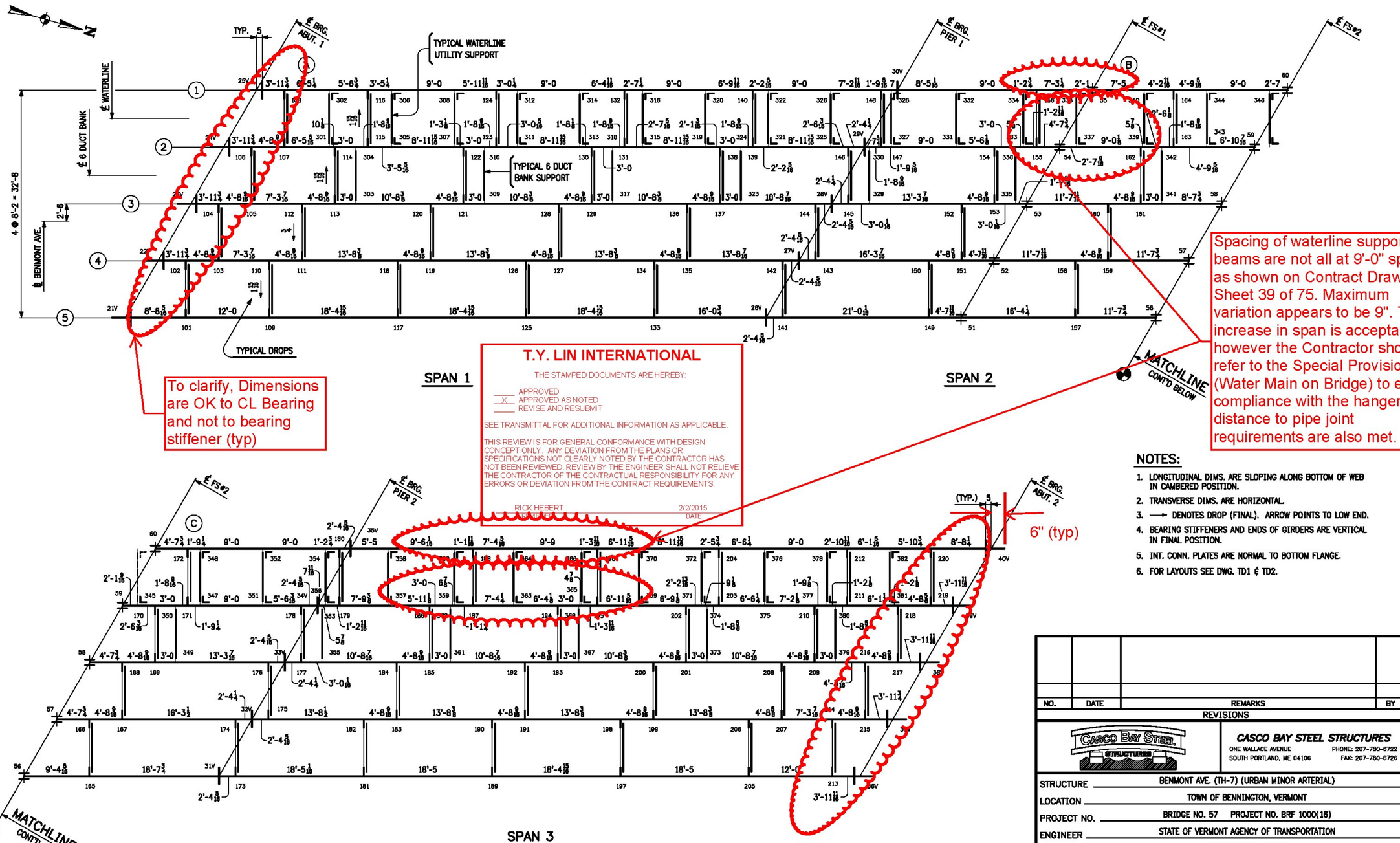

To clarify, Dimensions are OK to CL Bearing and not to bearing stiffener (typ)

Spacing of waterline support beams are not all at 9'-0" spaces as shown on Contract Drawing Sheet 39 of 75. Maximum variation appears to be 9". The increase in span is acceptable, however the Contractor should refer to the Special Provision (Water Main on Bridge) to ensure compliance with the hanger distance to pipe joint requirements are also met.

T.Y. LIN INTERNATIONAL

THE STAMPED DOCUMENTS ARE HEREBY:

____ APPROVED
_X_ APPROVED AS NOTED
____ REVISE AND RESUBMIT

SEE TRANSMITTAL FOR ADDITIONAL INFORMATION AS APPLICABLE.

THIS REVIEW IS FOR GENERAL CONFORMANCE WITH DESIGN CONCEPT ONLY. ANY DEVIATION FROM THE PLANS OR SPECIFICATIONS NOT CLEARLY NOTED BY THE CONTRACTOR HAS NOT BEEN REVIEWED. REVIEW BY THE ENGINEER SHALL NOT RELIEVE THE CONTRACTOR OF THE CONTRACTUAL RESPONSIBILITY FOR ANY ERRORS OR DEVIATION FROM THE CONTRACT REQUIREMENTS.

RICK HEBERT — 2/2/2015
REVIEWER — DATE

NOTES:

1. LONGITUDINAL DIMS. ARE SLOPING ALONG BOTTOM OF WEB IN CAMBERED POSITION.
2. TRANSVERSE DIMS. ARE HORIZONTAL.
3. ⟶ DENOTES DROP (FINAL). ARROW POINTS TO LOW END.
4. BEARING STIFFENERS AND ENDS OF GIRDERS ARE VERTICAL IN FINAL POSITION.
5. INT. CONN. PLATES ARE NORMAL TO BOTTOM FLANGE.
6. FOR LAYOUTS SEE DWG. TD1 ℄ TD2.

THIS IS A WORK DRAWING. ITS FUNCTION IS TO PROVIDE BASIC DIMENSIONS AND CONCEPTS FOR USE IN THE PREPARATION OF THE SHOP DETAILS. IT IS NOT INTENDED TO BE USED FOR ERECTION OR FABRICATION.

NO.	DATE	REMARKS	BY

REVISIONS

CASCO BAY STEEL STRUCTURES

CASCO BAY STEEL STRUCTURES
ONE WALLACE AVENUE
SOUTH PORTLAND, ME 04106
PHONE: 207-780-6722
FAX: 207-780-6726

STRUCTURE	BENMONT AVE. (TH-7) (URBAN MINOR ARTERIAL)
LOCATION	TOWN OF BENNINGTON, VERMONT
PROJECT NO.	BRIDGE NO. 57 PROJECT NO. BRF 1000(16)
ENGINEER	STATE OF VERMONT AGENCY OF TRANSPORTATION
CUSTOMER	ALPINE CONSTRUCTION
ITEM	CALC PLAN
SURFACE PREP.	OPEN HOLES
PAINT	

APPROVAL	DRAWN WCG 12-2-14	SHEET NO. WS1	JOB NO. 605
SHOP	CHECKED LT 12-5-14		

1411()-2 CPLN-1411A

Sheet WS1 - Plotted: 01/06/2015 @ 08:35 (HEXTHEN)

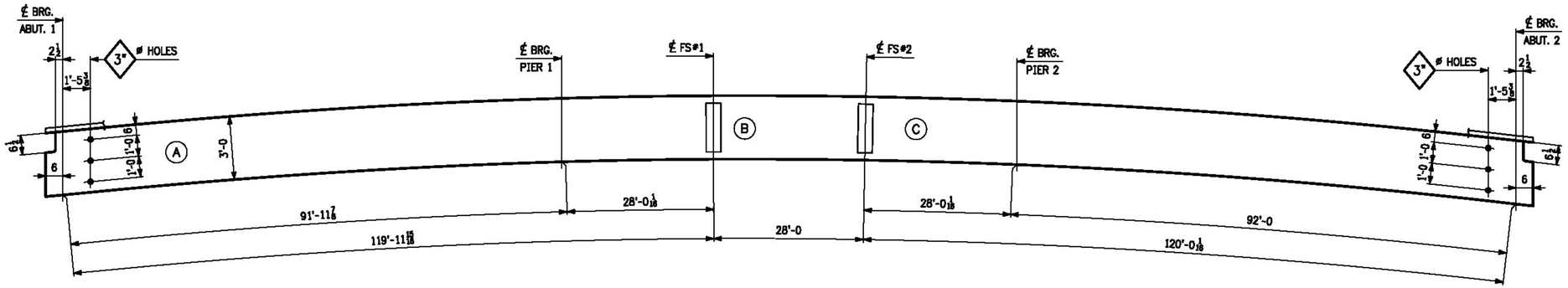

TYP. ELEVATION

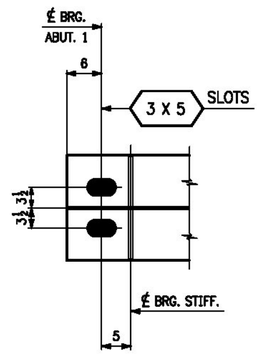

BOTTOM FLANGE DETAIL

ABUT. 1 - SHOWN
ABUT. 2 - ROT. 180°

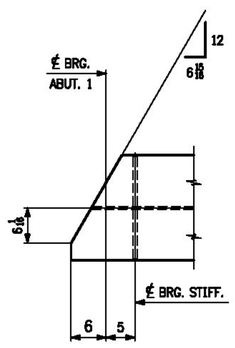

TOP FLANGE DETAIL

ABUT. 1 - SHOWN
ABUT. 2 - ROT. 180°

FINAL GRADE @ ℄ BRGS				
LINE	ABUT 1	PIER 1	PIER 2	ABUT 2
1	.0225	.0062	-.0122	-.0311
2	.0235	.0070	-.0116	-.0301
3	.0244	.0080	-.0104	-.0291
4	.0252	.0090	-.0094	-.0281
5	.0260	.0099	-.0085	-.0271

THIS IS A WORK DRAWING. ITS FUNCTION IS TO PROVIDE BASIC DIMENSIONS AND CONCEPTS FOR USE IN THE PREPARATION OF THE SHOP DETAILS. IT IS NOT INTENDED TO BE USED FOR ERECTION OR FABRICATION.

T.Y. LIN INTERNATIONAL

THE STAMPED DOCUMENTS ARE HEREBY:

__X__ APPROVED
____ APPROVED AS NOTED
____ REVISE AND RESUBMIT

SEE TRANSMITTAL FOR ADDITIONAL INFORMATION AS APPLICABLE.

THIS REVIEW IS FOR GENERAL CONFORMANCE WITH DESIGN CONCEPT ONLY. ANY DEVIATION FROM THE PLANS OR SPECIFICATIONS NOT CLEARLY NOTED BY THE CONTRACTOR HAS NOT BEEN REVIEWED. REVIEW BY THE ENGINEER SHALL NOT RELIEVE THE CONTRACTOR OF THE CONTRACTUAL RESPONSIBILITY FOR ANY ERRORS OR DEVIATION FROM THE CONTRACT REQUIREMENTS.

RICK HEBERT — REVIEWER
2/2/2015 — DATE

NO.	DATE	REMARKS	BY

REVISIONS

CASCO BAY STEEL STRUCTURES
ONE WALLACE AVENUE
SOUTH PORTLAND, ME 04106
PHONE: 207-780-6722
FAX: 207-780-6726

STRUCTURE: BENMONT AVE. (TH-7) (URBAN MINOR ARTERIAL)
LOCATION: TOWN OF BENNINGTON, VERMONT
PROJECT NO.: BRIDGE NO. 57 PROJECT NO. BRF 1000(16)
ENGINEER: STATE OF VERMONT AGENCY OF TRANSPORTATION
CUSTOMER: ALPINE CONSTRUCTION
ITEM: CALC PLAN
SURFACE PREP.: OPEN HOLES:
PAINT:

APPROVAL	DRAWN WCG 12-2-14	SHEET NO.	JOB NO.
SHOP	CHECKED 12-5-14	WS2	605

1411()-2 CPLN-1411B

Sheet WS2 - Plotted: 01/06/2015 @ 08:35 (HEATHEN)

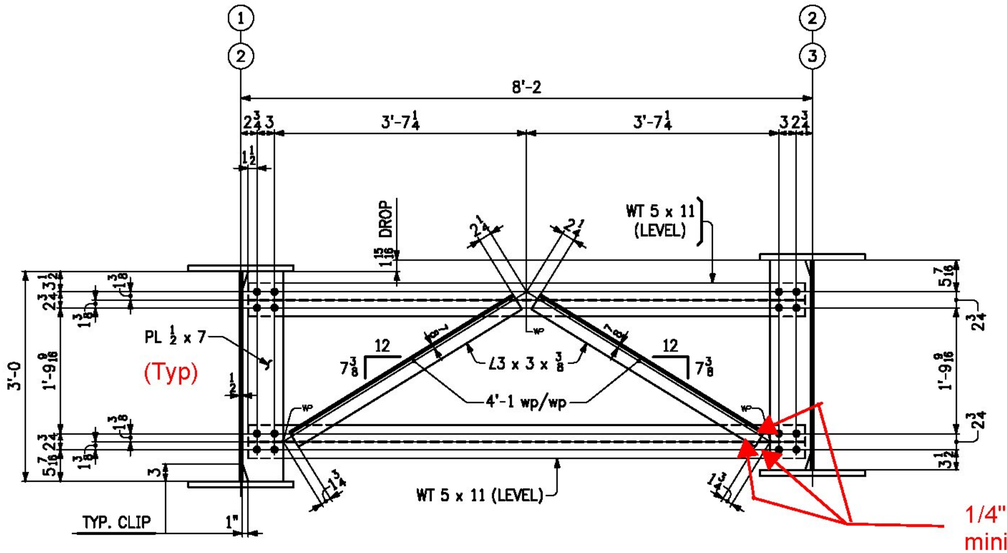

1/4" Fillet Weld, 6" minimum Length Typ

TYPE A CROSSFRAME BETWEEN GIRDERS 1, 2 ℄ 3
(LOOKING UPSTATION)

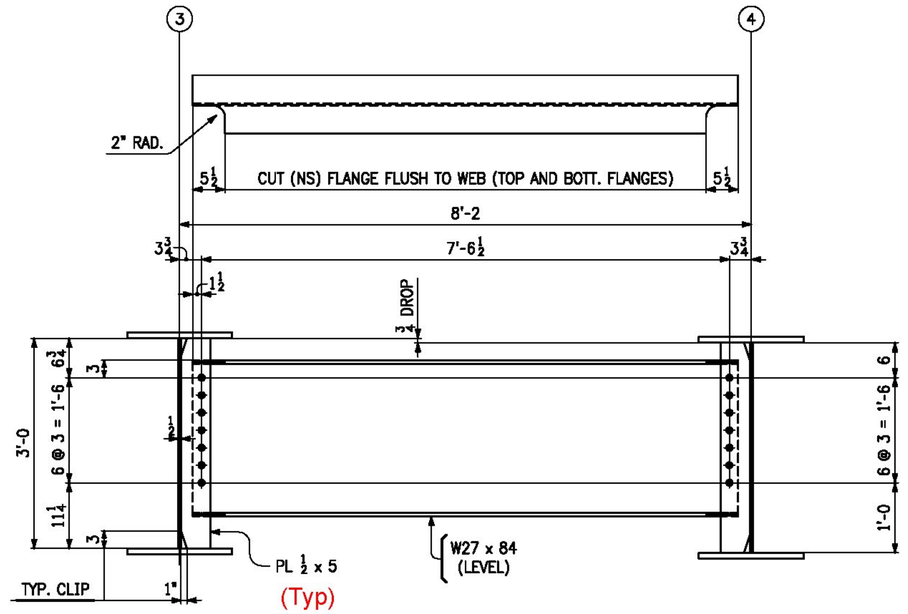

TYPE B DIAPHRAGM BETWEEN GIRDERS 3 ℄ 4
(LOOKING UPSTATION)

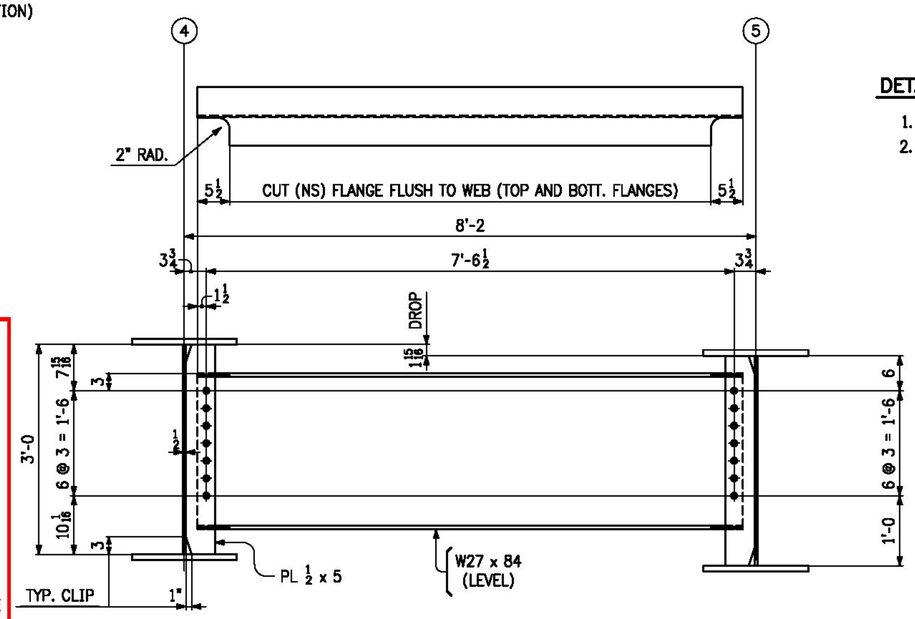

TYPE B DIAPHRAGM BETWEEN GIRDERS 4 ℄ 5
(LOOKING UPSTATION)

DETAILER NOTE FOR TYPE B DIAPHRAGMS BETWEEN GIRDERS 3 ℄ 4:

1. HOLES IN CONNECTION PLATES SHALL BE $1\frac{1}{16}$ø FOR $\frac{7}{8}$ø BOLTS.
2. BOLTS SHALL NOT BE TIGHTENED UNTIL AFTER PHASE III DECK CONCRETE HAS BEEN POURED.

T.Y. LIN INTERNATIONAL

THE STAMPED DOCUMENTS ARE HEREBY:

____ APPROVED
__X__ APPROVED AS NOTED
____ REVISE AND RESUBMIT

SEE TRANSMITTAL FOR ADDITIONAL INFORMATION AS APPLICABLE.

THIS REVIEW IS FOR GENERAL CONFORMANCE WITH DESIGN CONCEPT ONLY. ANY DEVIATION FROM THE PLANS OR SPECIFICATIONS NOT CLEARLY NOTED BY THE CONTRACTOR HAS NOT BEEN REVIEWED. REVIEW BY THE ENGINEER SHALL NOT RELIEVE THE CONTRACTOR OF THE CONTRACTUAL RESPONSIBILITY FOR ANY ERRORS OR DEVIATION FROM THE CONTRACT REQUIREMENTS.

RICK HEBERT — REVIEWER
2/2/2015 — DATE

THIS IS A WORK DRAWING. ITS FUNCTION IS TO PROVIDE BASIC DIMENSIONS AND CONCEPTS FOR USE IN THE PREPARATION OF THE SHOP DETAILS. IT IS NOT INTENDED TO BE USED FOR ERECTION OR FABRICATION.

NO.	DATE	REMARKS	BY
		REVISIONS	

CASCO BAY STEEL STRUCTURES
ONE WALLACE AVENUE
SOUTH PORTLAND, ME 04106
PHONE: 207-780-6722
FAX: 207-780-6726

STRUCTURE	BENMONT AVE. (TH-7) (URBAN MINOR ARTERIAL)
LOCATION	TOWN OF BENNINGTON, VERMONT
PROJECT NO.	BRIDGE NO. 57 PROJECT NO. BRF 1000(16)
ENGINEER	STATE OF VERMONT AGENCY OF TRANSPORTATION
CUSTOMER	ALPINE CONSTRUCTION
ITEM	LAYOUTS
SURFACE PREP.	OPEN HOLES $1\frac{1}{16}$ø HOLES FOR $\frac{7}{8}$ø BOLTS (UN)
PAINT	

APPROVAL	DRAWN WCG 12-2-14		SHEET NO.	JOB NO.
SHOP	CHECKED CS 12-3-14		TD1	605

1411()-3 LYOT-1411A

Sheet TD1 - Plotted: 01/09/2015 @ 08:35 (HEATHER)

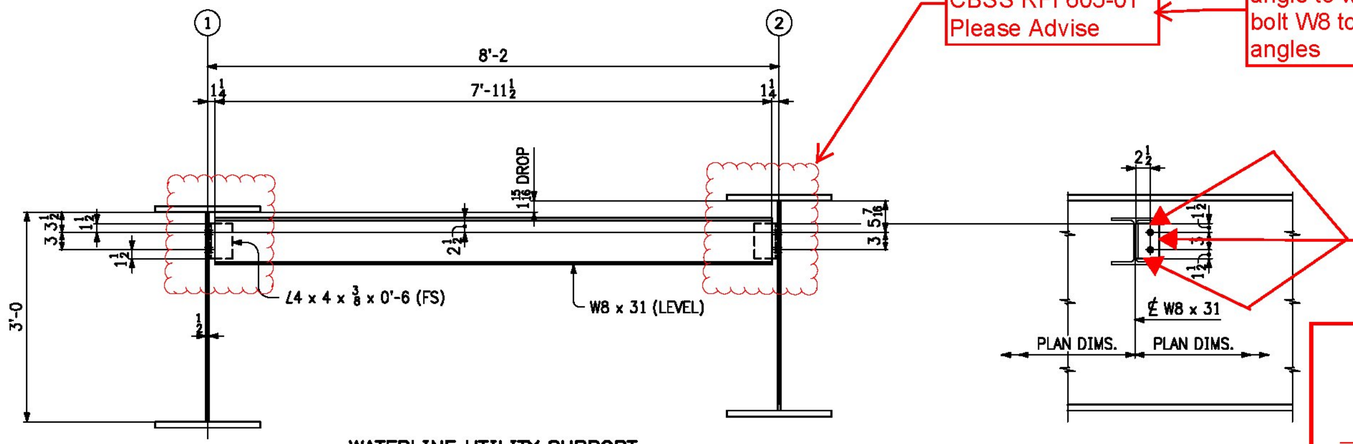

WATERLINE UTILITY SUPPORT
BETWEEN GIRDERS 1 ℄ 2
(LOOKING UPSTATION)

Shop weld connection angle to web

CBSS RFI 605-01
Please Advise

Shop weld connection angle to web and field bolt W8 to connection angles

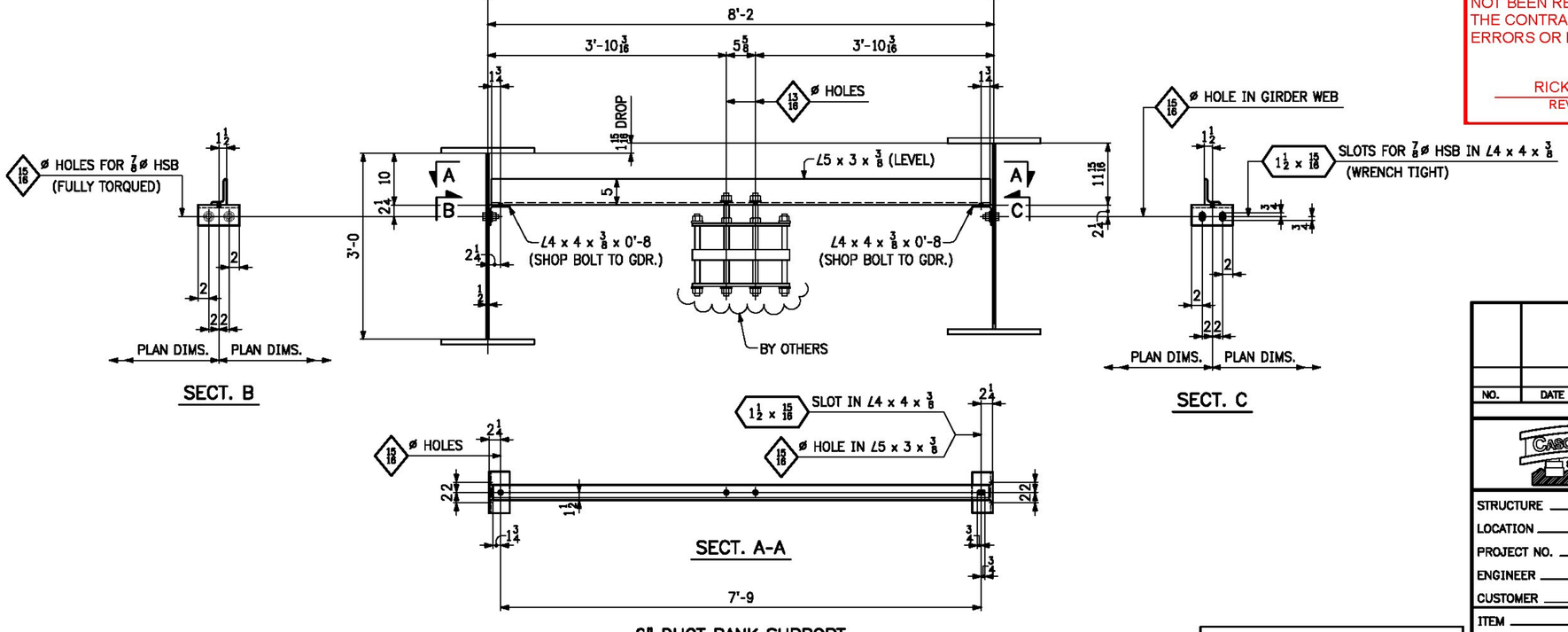

SECT. B

SECT. C

SECT. A-A

6" DUCT BANK SUPPORT
BETWEEN GIRDERS 2 ℄ 3
(LOOKING UPSTATION)

THIS IS A WORK DRAWING. ITS FUNCTION IS TO PROVIDE BASIC DIMENSIONS AND CONCEPTS FOR USE IN THE PREPARATION OF THE SHOP DETAILS. IT IS NOT INTENDED TO BE USED FOR ERECTION OR FABRICATION.

T.Y. LIN INTERNATIONAL

THE STAMPED DOCUMENTS ARE HEREBY:

____ APPROVED
_X_ APPROVED AS NOTED
____ REVISE AND RESUBMIT

SEE TRANSMITTAL FOR ADDITIONAL INFORMATION AS APPLICABLE.

THIS REVIEW IS FOR GENERAL CONFORMANCE WITH DESIGN CONCEPT ONLY. ANY DEVIATION FROM THE PLANS OR SPECIFICATIONS NOT CLEARLY NOTED BY THE CONTRACTOR HAS NOT BEEN REVIEWED. REVIEW BY THE ENGINEER SHALL NOT RELIEVE THE CONTRACTOR OF THE CONTRACTUAL RESPONSIBILITY FOR ANY ERRORS OR DEVIATION FROM THE CONTRACT REQUIREMENTS.

RICK HEBERT — REVIEWER
2/2/2015 — DATE

NO.	DATE	REMARKS	BY
		REVISIONS	

CASCO BAY STEEL STRUCTURES
ONE WALLACE AVENUE
SOUTH PORTLAND, ME 04106
PHONE: 207-780-6722
FAX: 207-780-6726

STRUCTURE	BENMONT AVE. (TH-7) (URBAN MINOR ARTERIAL)
LOCATION	TOWN OF BENNINGTON, VERMONT
PROJECT NO.	BRIDGE NO. 57 PROJECT NO. BRF 1000(16)
ENGINEER	STATE OF VERMONT AGENCY OF TRANSPORTATION
CUSTOMER	ALPINE CONSTRUCTION
ITEM	LAYOUTS
SURFACE PREP.	OPEN HOLES 13/16ø HOLES FOR ¾ø BOLTS
PAINT	

APPROVAL	DRAWN WCG 12-2-14		SHEET NO.	JOB NO.
SHOP	CHECKED LST 12-3-14		TD2	605

1411()-3 LYOT-1411B

Sheet TD2 - Plotted: 01/08/2015 @ 08:55 (HEATHER)

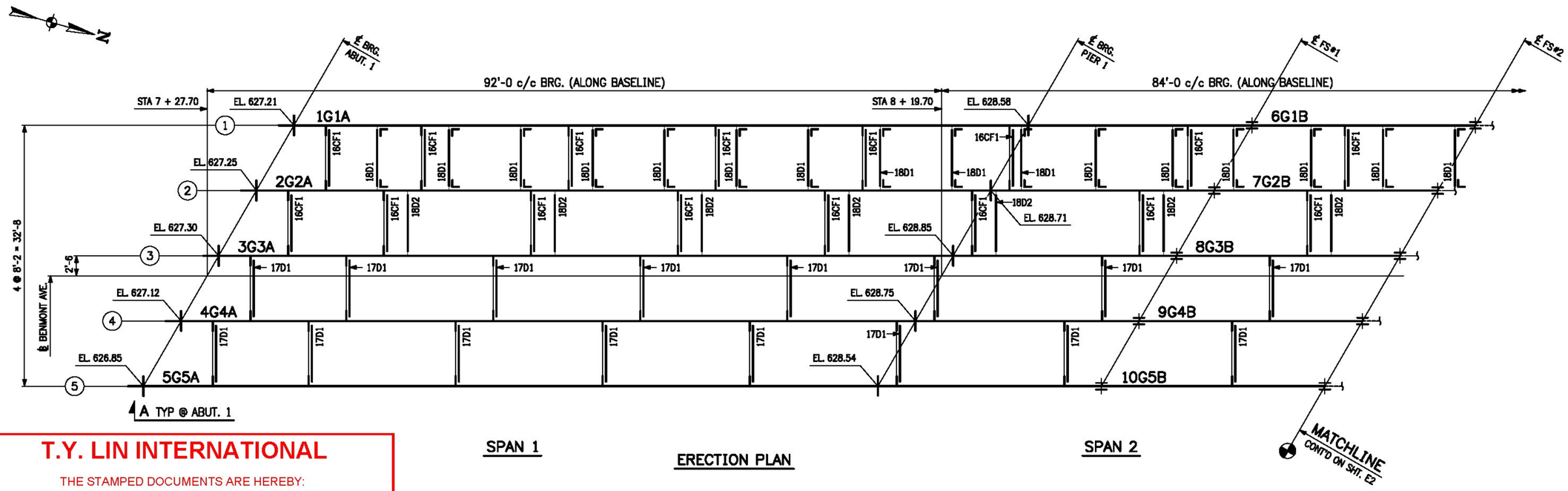

SPAN 1

ERECTION PLAN

SPAN 2

T.Y. LIN INTERNATIONAL

THE STAMPED DOCUMENTS ARE HEREBY:

__X__ APPROVED
_____ APPROVED AS NOTED
_____ REVISE AND RESUBMIT

SEE TRANSMITTAL FOR ADDITIONAL INFORMATION AS APPLICABLE.

THIS REVIEW IS FOR GENERAL CONFORMANCE WITH DESIGN CONCEPT ONLY. ANY DEVIATION FROM THE PLANS OR SPECIFICATIONS NOT CLEARLY NOTED BY THE CONTRACTOR HAS NOT BEEN REVIEWED. REVIEW BY THE ENGINEER SHALL NOT RELIEVE THE CONTRACTOR OF THE CONTRACTUAL RESPONSIBILITY FOR ANY ERRORS OR DEVIATION FROM THE CONTRACT REQUIREMENTS.

RICK HEBERT — REVIEWER
2/2/2015 — DATE

CONTRACTOR NOTE:
ELEVATIONS ARE GIVEN TO BOTTOM OF STEEL - DO NOT POUR TO FINAL ELEVATIONS WITHOUT VERIFICATION OF BEARING HEIGHTS AND BRIDGE SEATS.

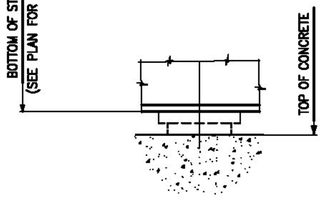

TYP. PIER ELEVATION

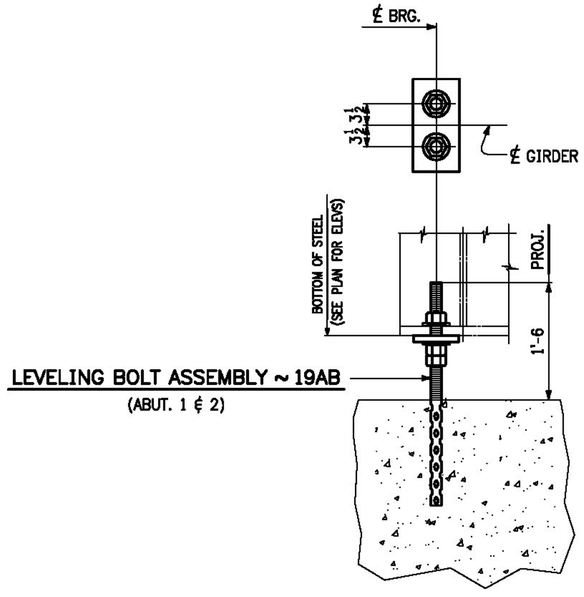

LEVELING BOLT ASSEMBLY ~ 19AB
(ABUT. 1 ℄ 2)

SECT. A

NOTES:

1. FOR GENERAL NOTES, SEE DWG. GN1.
2. ALL DIMENSIONS ARE GIVEN IN A HORIZONTAL PLANE.

NO.	DATE	REMARKS	BY

REVISIONS

CASCO BAY STEEL STRUCTURES
ONE WALLACE AVENUE
SOUTH PORTLAND, ME 04106
PHONE: 207-780-6722
FAX: 207-780-6726

STRUCTURE	BENMONT AVE. (TH-7) (URBAN MINOR ARTERIAL)
LOCATION	TOWN OF BENNINGTON, VERMONT
PROJECT NO.	BRIDGE NO. 57 PROJECT NO. BRF 1000(16)
ENGINEER	STATE OF VERMONT AGENCY OF TRANSPORTATION
CUSTOMER	ALPINE CONSTRUCTION
ITEM	ERECTION PLAN
SURFACE PREP.	OPEN HOLES
PAINT	

APPROVAL	DRAWN MAY 12-3-14	SHEET NO. E1	JOB NO. 605
SHOP	CHECKED FM 1-6-15		

1411-1

EPLN-1411A

Sheet E1 - Plotted: 01/08/2015 @ 08:34 (HEATHER)

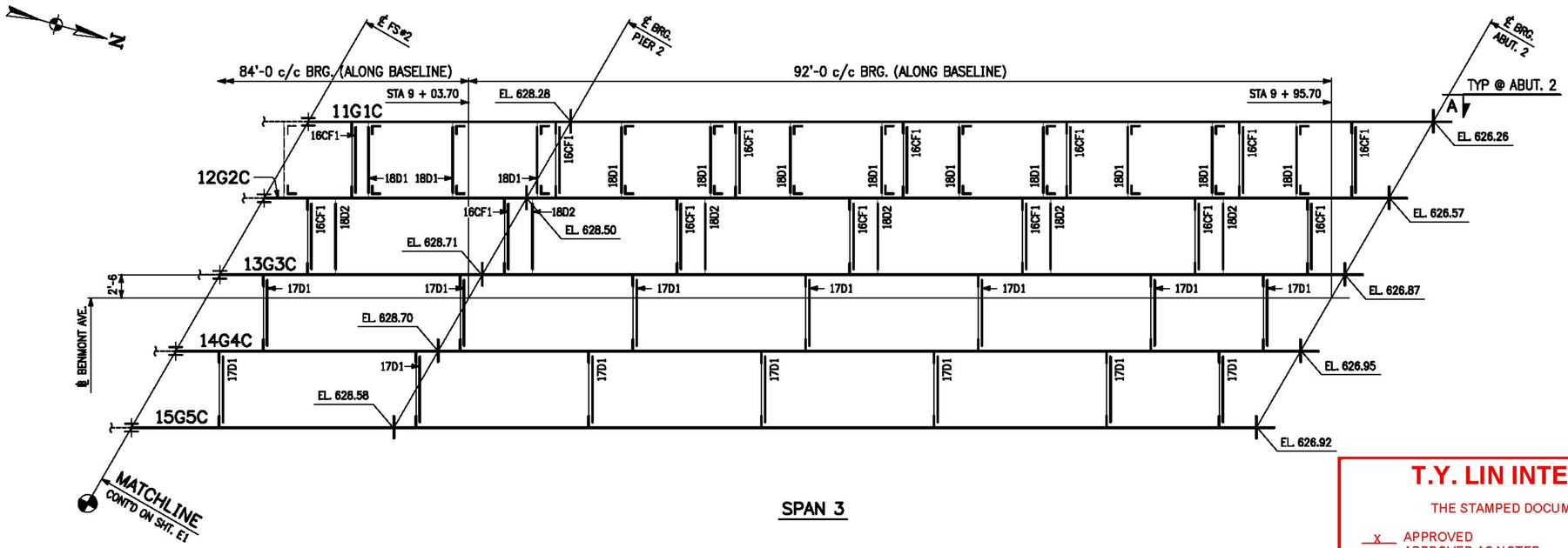

SPAN 3

FIELD BOLT LIST							A325 TYPE 3 BOLTS							
LINE	NO. REQ'D.	BOLT DIAM.	BOLT LEN.	BOLTS /CONN.	# OF CONN.	GRIP	THICKNESS OF PCS. CONNECTED						WASH CODE	PIECES CONNECTED AND REMARKS
1														**FIELD SPLICES**
2	480	7/8	3 3/4	48	10	2 1/2	3/4	1"	3/4				1	TOP FLANGE SPLICE
3	600	7/8	2 3/4	60	10	1 1/2	1/2	1/2	1/2				1	WEB SPLICE
4	480	7/8	3 3/4	48	10	2 1/2	3/4	1"	3/4				1	BOTTOM FLANGE SPLICE
5														
6														**DIAPHRAGMS**
7	112	3/4	2	4	28	7/8	3/8	1/2					1	WATERLINE UTILITY SUPPORTS TO GDR'S
8	26	7/8	2	2	13	3/4	3/8	3/8					1	6" DUCT BANK SUPPORTS TO GDR. CONN. ℄
9	420	7/8	2 1/4	14	30	15/16	7/16	1/2					1	DPH'S BTW. GDR'S 3, 4 ℄ 5 TO CONN. PL'S
10														
11														**CROSSFRAMES**
12	480	7/8	2 1/4	16	30	7/8	3/8	1/2					1	CF'S BTW. GDR'S 1, 2 ℄ 3 TO CONN. PL'S

WASHER CODES

1: 1 HARD FLAT WASHER

FIELD BOLT SUMMARY		2% + 3 ADDED, MIN. 3 EXTRA				
LINE	NO. OF BOLTS	BOLT DIAM.	TYPE	BOLT LEN.	ACTUAL COUNT	REMARKS
1	30	7/8	A325 Type 3	2	26	
2	921	7/8	A325 Type 3	2 1/4	900	
3	615	7/8	A325 Type 3	2 3/4	600	
4	982	7/8	A325 Type 3	3 3/4	960	
5						
6	117	3/4	A325 Type 3	2	112	
7						
8	2548	Hard Flat Washers for 7/8" BOLT			2486	F436-3
9						
10	117	Hard Flat Washers for 3/4" BOLT			112	F436-3
11						
12						

T.Y. LIN INTERNATIONAL

THE STAMPED DOCUMENTS ARE HEREBY:

X APPROVED
____ APPROVED AS NOTED
____ REVISE AND RESUBMIT

SEE TRANSMITTAL FOR ADDITIONAL INFORMATION AS APPLICABLE.

THIS REVIEW IS FOR GENERAL CONFORMANCE WITH DESIGN CONCEPT ONLY. ANY DEVIATION FROM THE PLANS OR SPECIFICATIONS NOT CLEARLY NOTED BY THE CONTRACTOR HAS NOT BEEN REVIEWED. REVIEW BY THE ENGINEER SHALL NOT RELIEVE THE CONTRACTOR OF THE CONTRACTUAL RESPONSIBILITY FOR ANY ERRORS OR DEVIATION FROM THE CONTRACT REQUIREMENTS.

RICK HEBERT — REVIEWER
2/2/2015 — DATE

NO.	DATE	REMARKS	BY

REVISIONS

CASCO BAY STEEL STRUCTURES
ONE WALLACE AVENUE
SOUTH PORTLAND, ME 04106
PHONE: 207-780-6722
FAX: 207-780-6726

STRUCTURE: BENMONT AVE. (TH-7) (URBAN MINOR ARTERIAL)
LOCATION: TOWN OF BENNINGTON, VERMONT
PROJECT NO.: BRIDGE NO. 57 PROJECT NO. BRF 1000(16)
ENGINEER: STATE OF VERMONT AGENCY OF TRANSPORTATION
CUSTOMER: ALPINE CONSTRUCTION
ITEM: ERECTION PLAN
SURFACE PREP.: OPEN HOLES
PAINT:

APPROVAL	DRAWN MAY 12-3-14	SHEET NO.	JOB NO.
SHOP	CHECKED FM 1-6-15	E2	605

1411-1

EPLN-1411B

Sheet E2 - Plotted: 01/06/2015 @ 08:34 (HEATHER)

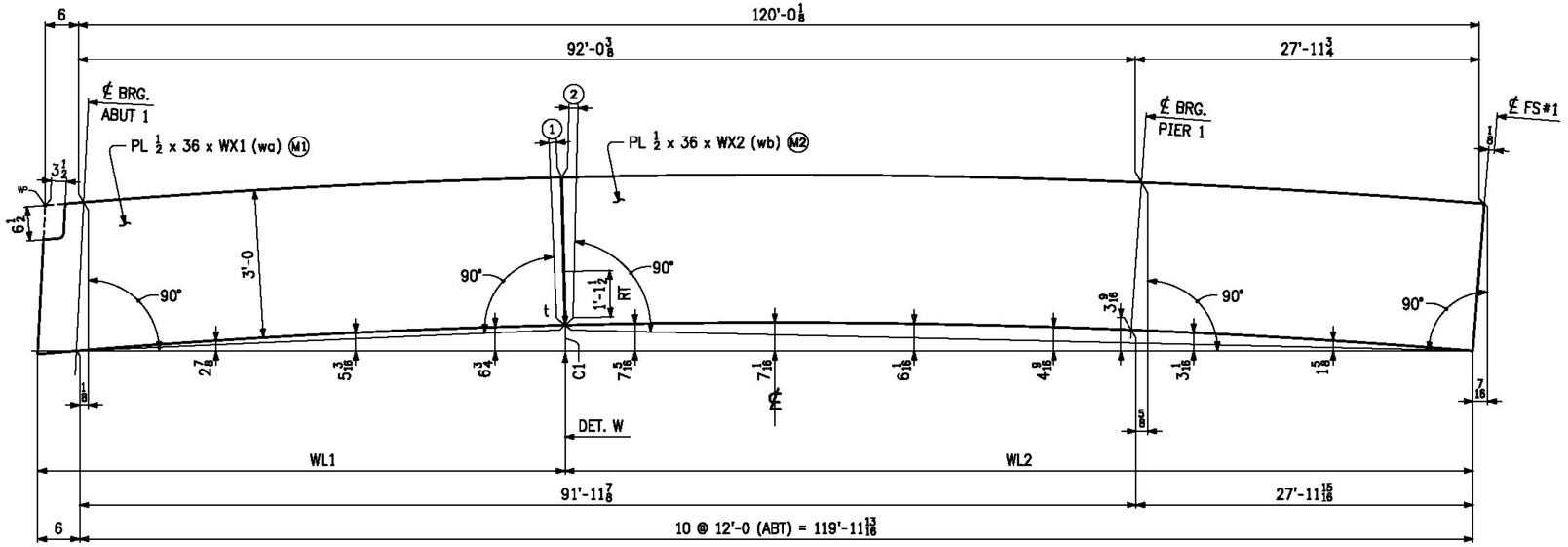

CAMBER DIAGRAM FOR 1G1A ℄ 2G2A

MARK	WX1	WX2	WL1	WL2	C1	①	②	M1	M2
1G1A	42'-11 5/16	77'-7 9/16	42'-10 7/8	77'-6 15/16	7 3/16	3/8	7/16	1/17	1/12
2G2A	47'-7 15/16	72'-10 7/8	47'-7 7/16	72'-10 3/8	7 5/16	7/16	3/8	1/16	1/13

NOTES:

1. MAT'L: M270-50WT2
2. FOR GENERAL NOTES SEE SHT. GN1.
3. "t" INDICATES WELDS SUBJECT TO TENSION.
4. "RT" DENOTES RADIOGRAPHIC INSPECTION. DIMENSION SHOWN IS 1/6 THE WEB DEPTH PLUS 25% OF THE REMAINDER.

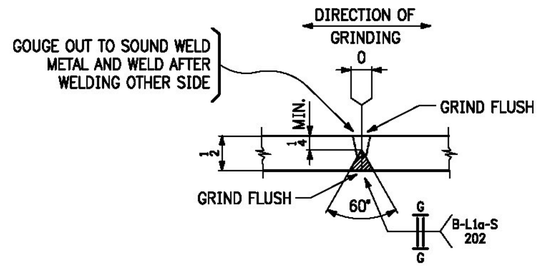

WEB SPLICE PLATE DET. "W"

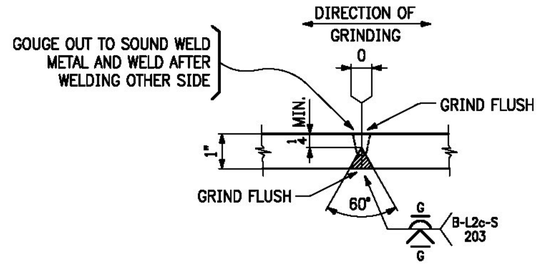

FLANGE PLATE SPLICE DETAIL "FA"

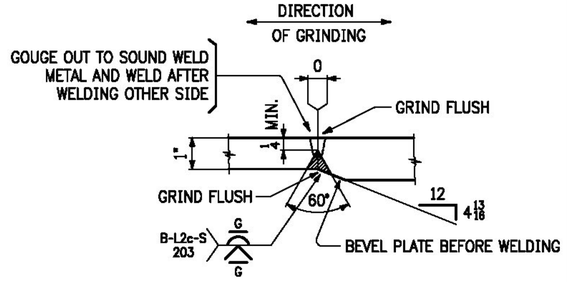

FLANGE PLATE SPLICE DETAIL "FB"

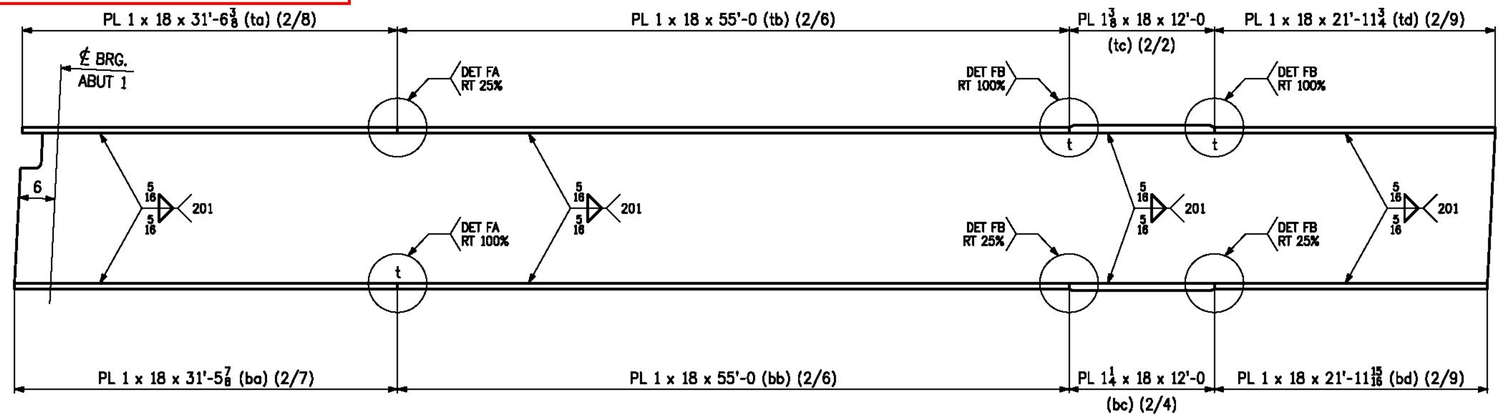

FLANGE DIAGRAM FOR 1G1A ℄ 2G2A

T.Y. LIN INTERNATIONAL

THE STAMPED DOCUMENTS ARE HEREBY:

__x__ APPROVED
____ APPROVED AS NOTED
____ REVISE AND RESUBMIT

SEE TRANSMITTAL FOR ADDITIONAL INFORMATION AS APPLICABLE.

THIS REVIEW IS FOR GENERAL CONFORMANCE WITH DESIGN CONCEPT ONLY. ANY DEVIATION FROM THE PLANS OR SPECIFICATIONS NOT CLEARLY NOTED BY THE CONTRACTOR HAS NOT BEEN REVIEWED. REVIEW BY THE ENGINEER SHALL NOT RELIEVE THE CONTRACTOR OF THE CONTRACTUAL RESPONSIBILITY FOR ANY ERRORS OR DEVIATION FROM THE CONTRACT REQUIREMENTS.

RICK HEBERT (REVIEWER) 2/2/2015 (DATE)

NO.	DATE	REMARKS	BY
		REVISIONS	

CASCO BAY STEEL STRUCTURES
ONE WALLACE AVENUE
SOUTH PORTLAND, ME 04106
PHONE: 207-780-6722
FAX: 207-780-6726

STRUCTURE	BENMONT AVE. (TH-7) (URBAN MINOR ARTERIAL)
LOCATION	TOWN OF BENNINGTON, VERMONT
PROJECT NO.	BRIDGE NO. 57 PROJECT NO. BRF 1000(16)
ENGINEER	STATE OF VERMONT AGENCY OF TRANSPORTATION
CUSTOMER	ALPINE CONSTRUCTION
ITEM	WEB ℄ FLANGE CUTTING DIAGRAMS
SURFACE PREP.	OPEN HOLES
PAINT	

APPROVAL	DRAWN DMM 12-5-14	SHEET NO. C1	JOB NO. 605
SHOP	CHECKED PM 1-2-15		

1411-4 WC-1411A

Sheet C1 - Plotted: 01/06/2015 @ 08:33 (HEATHER)

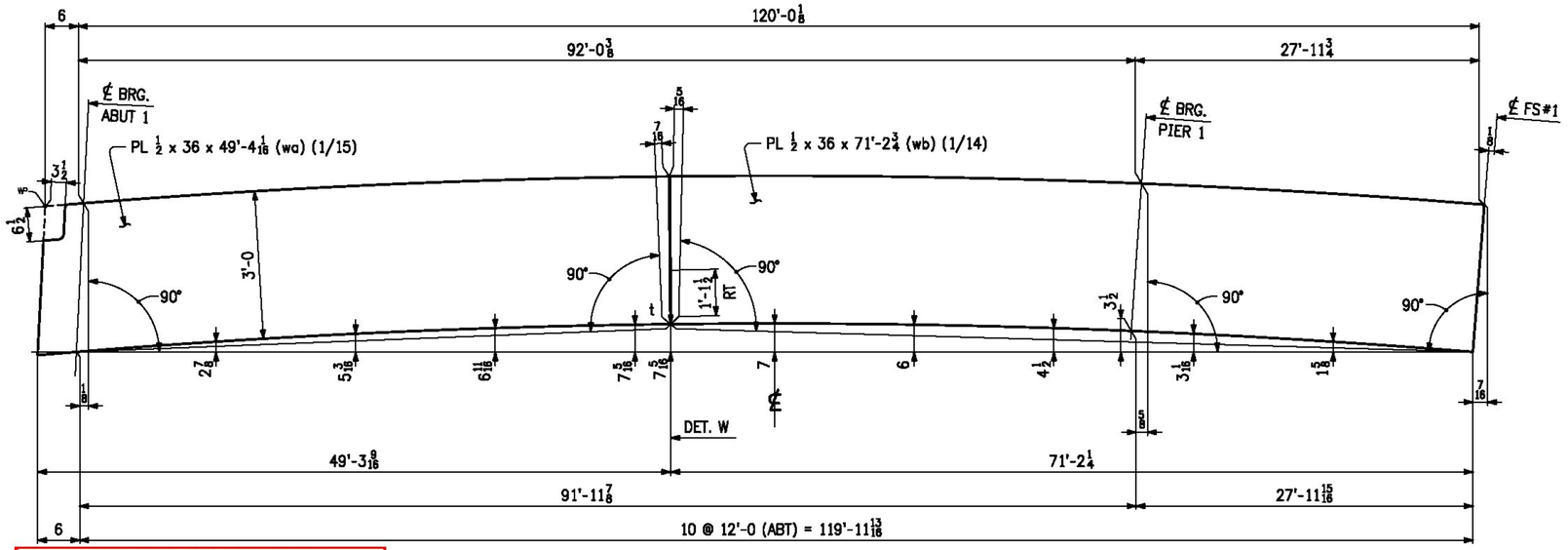

CAMBER DIAGRAM FOR 3G3A, 4G4A ℄ 5G5A

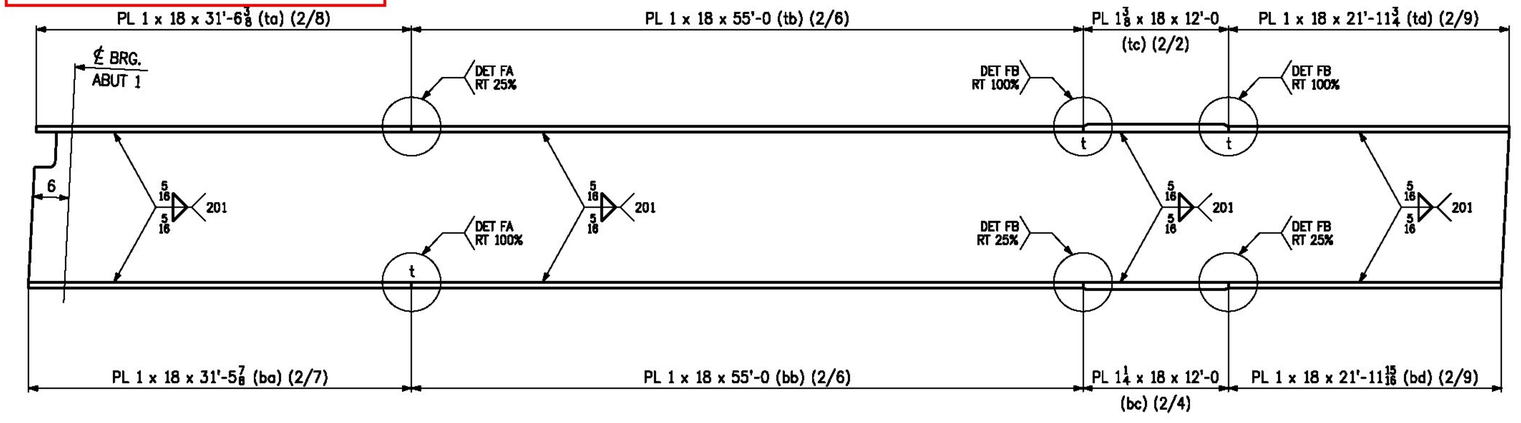

FLANGE DIAGRAM FOR 3G3A, 4G4A ℄ 5G5A

NOTES:

1. MAT'L: M270-50WT2
2. FOR GENERAL NOTES SEE SHT. GN1.
3. "t" INDICATES WELDS SUBJECT TO TENSION.
4. "RT" DENOTES RADIOGRAPHIC INSPECTION. DIMENSION SHOWN IS 1/6 THE WEB DEPTH PLUS 25% OF THE REMAINDER.

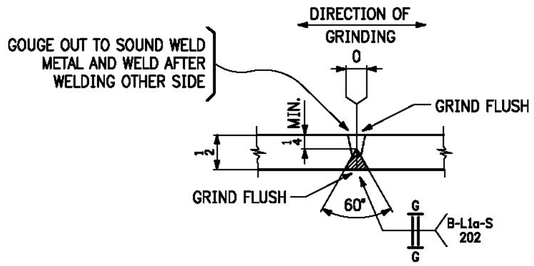

WEB SPLICE PLATE DET. "W"

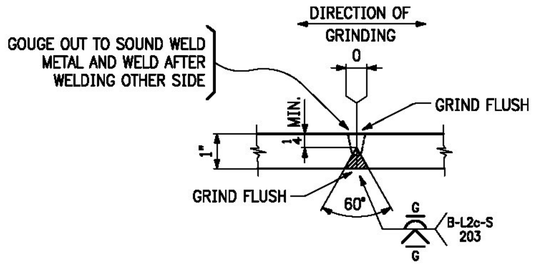

FLANGE PLATE SPLICE DETAIL "FA"

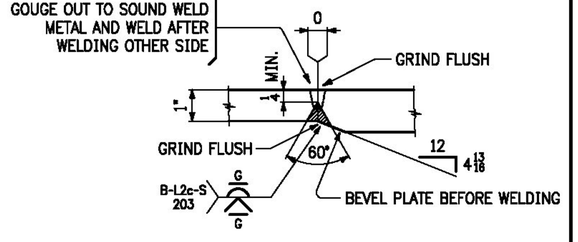

FLANGE PLATE SPLICE DETAIL "FB"

T.Y. LIN INTERNATIONAL

THE STAMPED DOCUMENTS ARE HEREBY:

_X_ APPROVED
____ APPROVED AS NOTED
____ REVISE AND RESUBMIT

SEE TRANSMITTAL FOR ADDITIONAL INFORMATION AS APPLICABLE.

THIS REVIEW IS FOR GENERAL CONFORMANCE WITH DESIGN CONCEPT ONLY. ANY DEVIATION FROM THE PLANS OR SPECIFICATIONS NOT CLEARLY NOTED BY THE CONTRACTOR HAS NOT BEEN REVIEWED. REVIEW BY THE ENGINEER SHALL NOT RELIEVE THE CONTRACTOR OF THE CONTRACTUAL RESPONSIBILITY FOR ANY ERRORS OR DEVIATION FROM THE CONTRACT REQUIREMENTS.

RICK HEBERT — REVIEWER — 2/2/2015 — DATE

NO.	DATE	REMARKS	BY
		REVISIONS	

CASCO BAY STEEL STRUCTURES

CASCO BAY STEEL STRUCTURES
ONE WALLACE AVENUE
SOUTH PORTLAND, ME 04106
PHONE: 207-780-6722
FAX: 207-780-6726

STRUCTURE	BENMONT AVE. (TH-7) (URBAN MINOR ARTERIAL)
LOCATION	TOWN OF BENNINGTON, VERMONT
PROJECT NO.	BRIDGE NO. 57 PROJECT NO. BRF 1000(16)
ENGINEER	STATE OF VERMONT AGENCY OF TRANSPORTATION
CUSTOMER	ALPINE CONSTRUCTION
ITEM	WEB ℄ FLANGE CUTTING DIAGRAMS
SURFACE PREP.	OPEN HOLES
PAINT	

APPROVAL	DRAWN DMM 12-5-14	SHEET NO. C2	JOB NO. 605
SHOP	CHECKED FM 1-2-15		

1411-4

WC-1411B

Sheet C2 - Plotted: 01/06/2015 @ 08:33 (HEATHER)

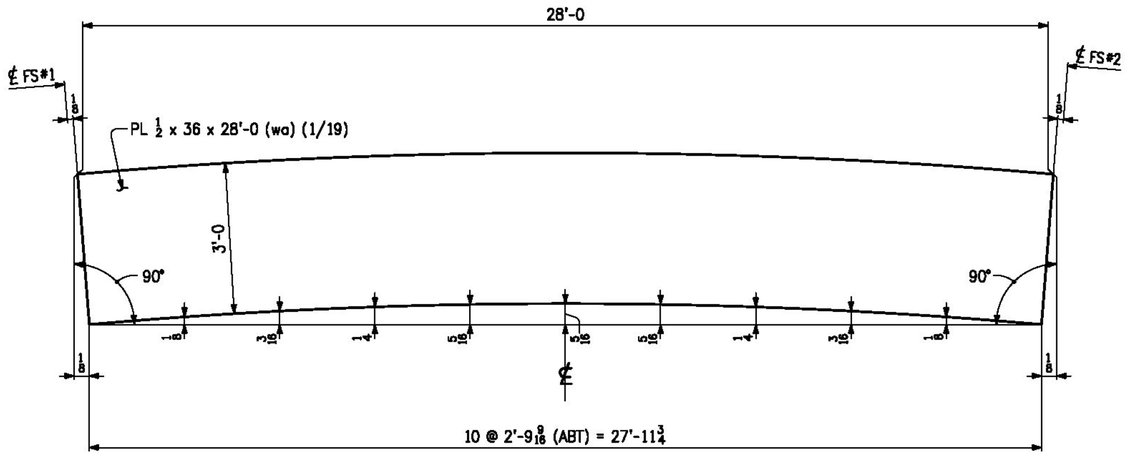

CAMBER DIAGRAM FOR 6G1B, 7G2B, 8G3B, 9G4B ℄ 10G5B

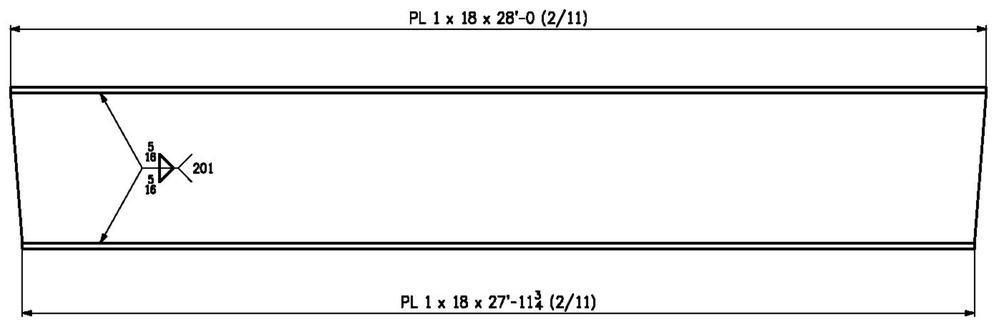

FLANGE DIAGRAM FOR 6G1B, 7G2B, 8G3B, 9G4B ℄ 10G5B

T.Y. LIN INTERNATIONAL

THE STAMPED DOCUMENTS ARE HEREBY:

__X__ APPROVED
_____ APPROVED AS NOTED
_____ REVISE AND RESUBMIT

SEE TRANSMITTAL FOR ADDITIONAL INFORMATION AS APPLICABLE.

THIS REVIEW IS FOR GENERAL CONFORMANCE WITH DESIGN CONCEPT ONLY. ANY DEVIATION FROM THE PLANS OR SPECIFICATIONS NOT CLEARLY NOTED BY THE CONTRACTOR HAS NOT BEEN REVIEWED. REVIEW BY THE ENGINEER SHALL NOT RELIEVE THE CONTRACTOR OF THE CONTRACTUAL RESPONSIBILITY FOR ANY ERRORS OR DEVIATION FROM THE CONTRACT REQUIREMENTS.

RICK HEBERT — REVIEWER
2/2/2015 — DATE

NOTES:

1. MAT'L: M270-50WT2
2. FOR GENERAL NOTES SEE SHT. GN1.

NO.	DATE	REMARKS	BY

REVISIONS

CASCO BAY STEEL STRUCTURES
ONE WALLACE AVENUE
SOUTH PORTLAND, ME 04106
PHONE: 207-780-6722
FAX: 207-780-6726

STRUCTURE: BENMONT AVE. (TH-7) (URBAN MINOR ARTERIAL)
LOCATION: TOWN OF BENNINGTON, VERMONT
PROJECT NO.: BRIDGE NO. 57 PROJECT NO. BRF 1000(16)
ENGINEER: STATE OF VERMONT AGENCY OF TRANSPORTATION
CUSTOMER: ALPINE CONSTRUCTION
ITEM: WEB ℄ FLANGE CUTTING DIAGRAMS
SURFACE PREP.: _____ OPEN HOLES: _____
PAINT: _____

APPROVAL	DRAWN DMM 12-8-14	SHEET NO.	JOB NO.
SHOP	CHECKED FM 1-2-15	C3	605

1411-4

WC-1411C

Sheet C3 - Plotted: 01/08/2015 @ 08:33 (HEATHER)

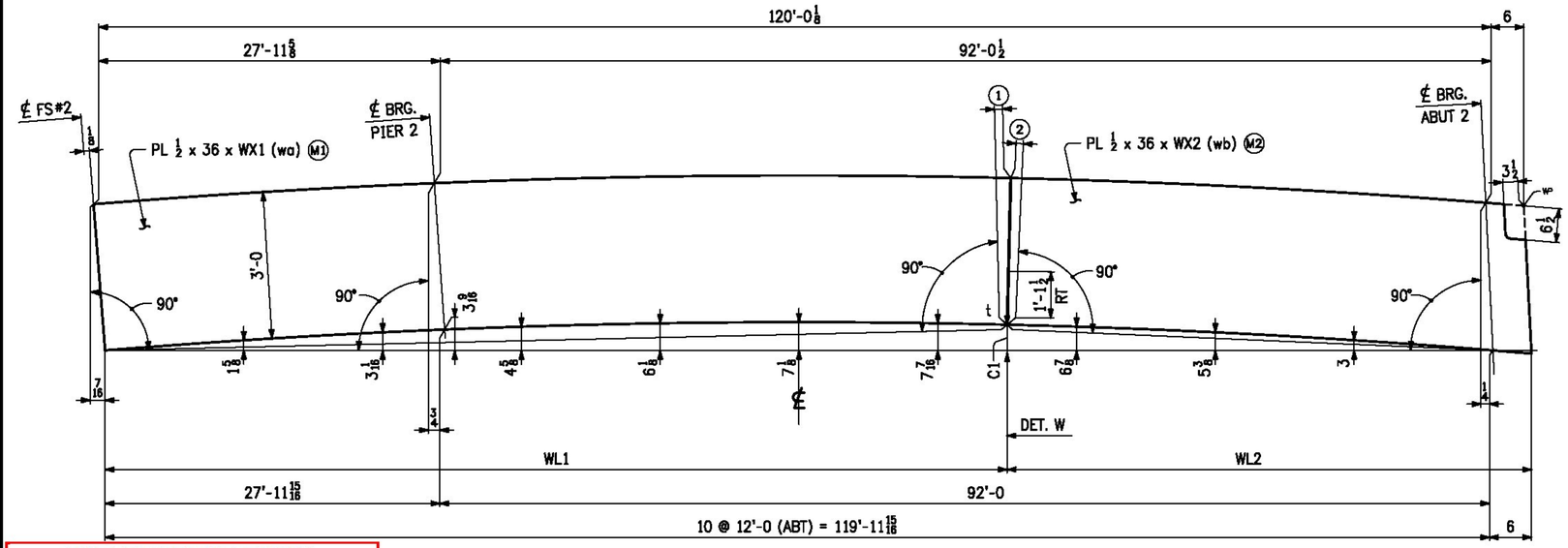

CAMBER DIAGRAM FOR 11G1C, 12G2C ℄ 13G3C

MARK	WX1	WX2	WL1	WL2	C1	①	②	M1	M2
11G1C	73'-5 5/8	47'-1 3/8	73'-5 1/16	47'-0 7/8	7 7/16	3/8	7/16	1/23	1/26
12G2C	77'-6 11/16	43'-0 1/4	77'-6 1/8	42'-11 13/16	7 5/16	7/16	3/8	1/21	1/28
13G3C	74'-2 13/16	46'-4 1/8	74'-2 5/16	46'-3 5/8	7 7/16	3/8	7/16	1/22	1/27

NOTES:

1. MAT'L: M270-50WT2
2. FOR GENERAL NOTES SEE SHT. GN1.
3. "t" INDICATES WELDS SUBJECT TO TENSION.
4. "RT" DENOTES RADIOGRAPHIC INSPECTION. DIMENSION SHOWN IS 1/6 THE WEB DEPTH PLUS 25% OF THE REMAINDER.

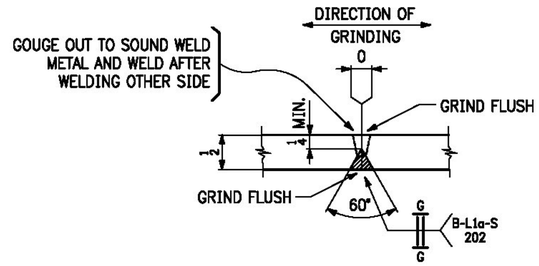

WEB SPLICE PLATE DET. "W"

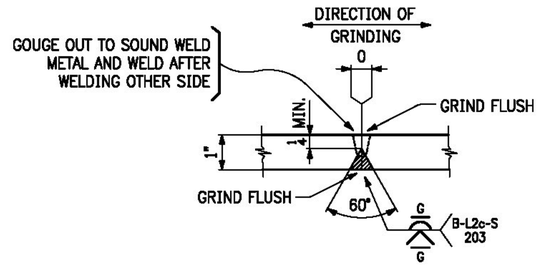

FLANGE PLATE SPLICE DETAIL "FA"

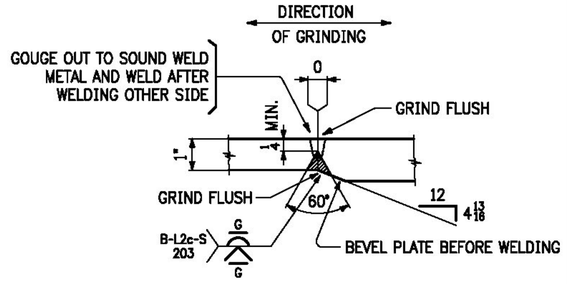

FLANGE PLATE SPLICE DETAIL "FB"

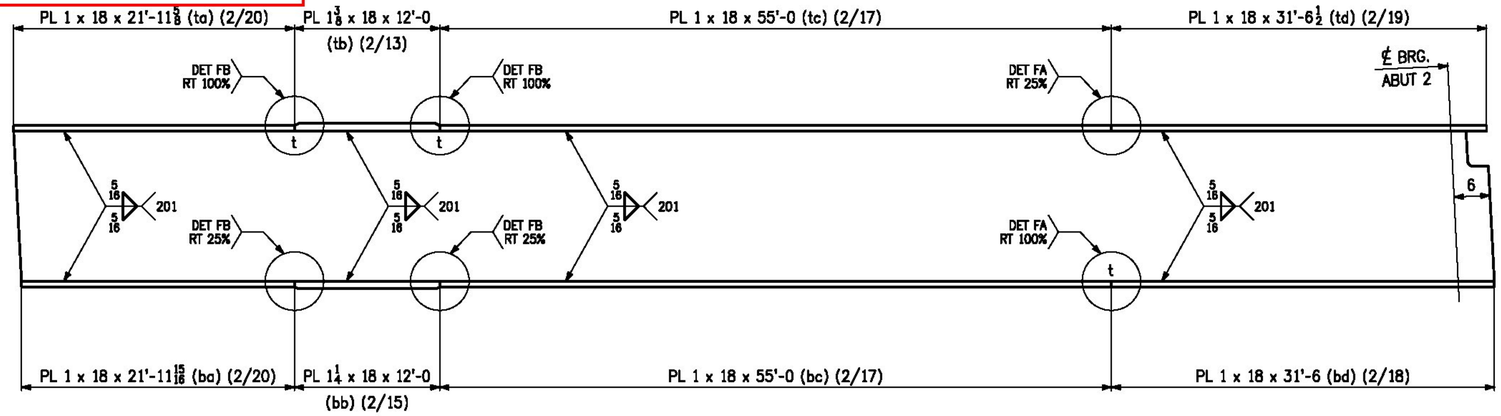

FLANGE DIAGRAM FOR 11G1C, 12G2C ℄ 13G3C

T.Y. LIN INTERNATIONAL

THE STAMPED DOCUMENTS ARE HEREBY:

__X__ APPROVED
____ APPROVED AS NOTED
____ REVISE AND RESUBMIT

SEE TRANSMITTAL FOR ADDITIONAL INFORMATION AS APPLICABLE.

THIS REVIEW IS FOR GENERAL CONFORMANCE WITH DESIGN CONCEPT ONLY. ANY DEVIATION FROM THE PLANS OR SPECIFICATIONS NOT CLEARLY NOTED BY THE CONTRACTOR HAS NOT BEEN REVIEWED. REVIEW BY THE ENGINEER SHALL NOT RELIEVE THE CONTRACTOR OF THE CONTRACTUAL RESPONSIBILITY FOR ANY ERRORS OR DEVIATION FROM THE CONTRACT REQUIREMENTS.

RICK HEBERT (REVIEWER) 2/2/2015 (DATE)

NO.	DATE	REMARKS	BY
		REVISIONS	

CASCO BAY STEEL STRUCTURES
ONE WALLACE AVENUE, SOUTH PORTLAND, ME 04106
PHONE: 207-780-6722 FAX: 207-780-6726

STRUCTURE	BENMONT AVE. (TH-7) (URBAN MINOR ARTERIAL)
LOCATION	TOWN OF BENNINGTON, VERMONT
PROJECT NO.	BRIDGE NO. 57 PROJECT NO. BRF 1000(16)
ENGINEER	STATE OF VERMONT AGENCY OF TRANSPORTATION
CUSTOMER	ALPINE CONSTRUCTION
ITEM	WEB ℄ FLANGE CUTTING DIAGRAMS
SURFACE PREP.	OPEN HOLES
PAINT	

APPROVAL	DRAWN DMM 12-5-14	SHEET NO.	JOB NO.
SHOP	CHECKED FM 1-2-15	C4	605

1411-4 WC-1411D

Sheet C4 - Plotted: 01/08/2015 @ 08:33 (HEATHER)

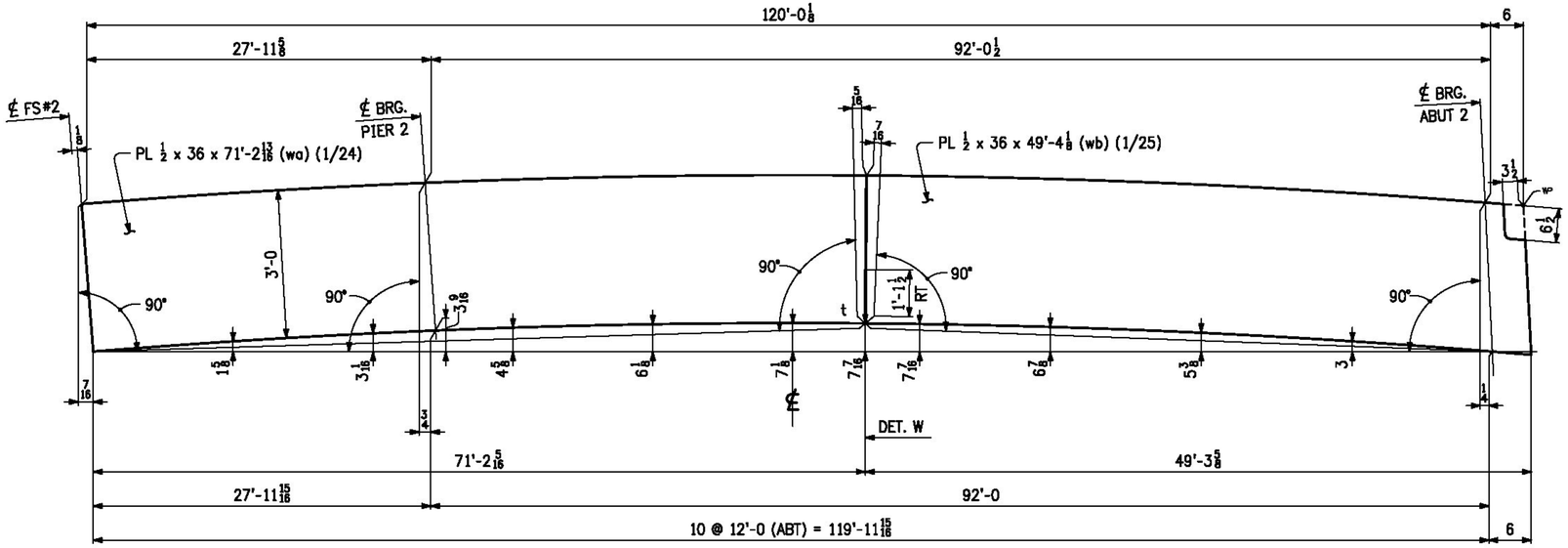

CAMBER DIAGRAM FOR 14G4C ℄ 15G5C

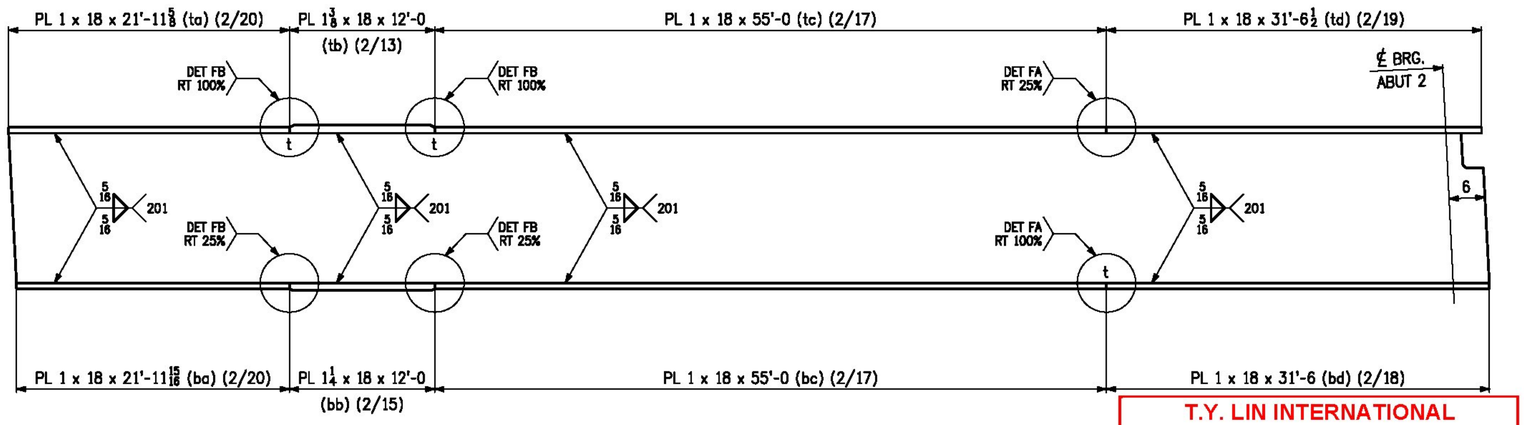

FLANGE DIAGRAM FOR 14G4C ℄ 15G5C

NOTES:

1. MAT'L: M270-50WT2
2. FOR GENERAL NOTES SEE SHT. GN1.
3. "t" INDICATES WELDS SUBJECT TO TENSION.
4. "RT" DENOTES RADIOGRAPHIC INSPECTION. DIMENSION SHOWN IS 1/6 THE WEB DEPTH PLUS 25% OF THE REMAINDER.

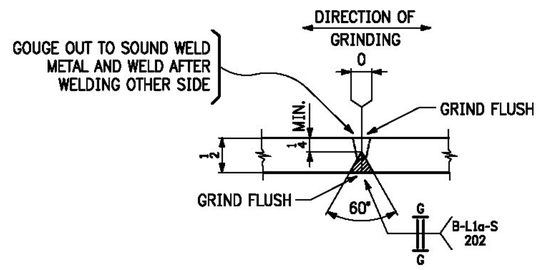

WEB SPLICE PLATE DET. "W"

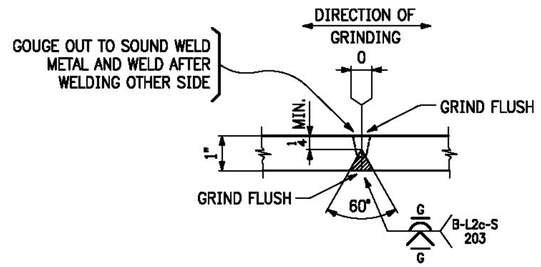

FLANGE PLATE SPLICE DETAIL "FA"

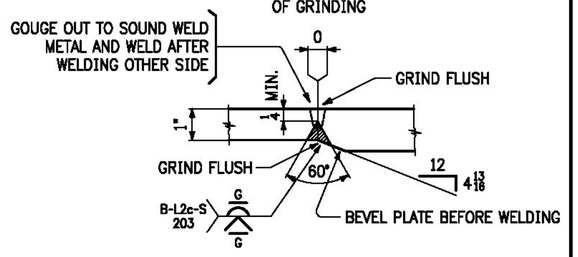

FLANGE PLATE SPLICE DETAIL "FB"

T.Y. LIN INTERNATIONAL

THE STAMPED DOCUMENTS ARE HEREBY:

_X_ APPROVED
___ APPROVED AS NOTED
___ REVISE AND RESUBMIT

SEE TRANSMITTAL FOR ADDITIONAL INFORMATION AS APPLICABLE.

THIS REVIEW IS FOR GENERAL CONFORMANCE WITH DESIGN CONCEPT ONLY. ANY DEVIATION FROM THE PLANS OR SPECIFICATIONS NOT CLEARLY NOTED BY THE CONTRACTOR HAS NOT BEEN REVIEWED. REVIEW BY THE ENGINEER SHALL NOT RELIEVE THE CONTRACTOR OF THE CONTRACTUAL RESPONSIBILITY FOR ANY ERRORS OR DEVIATION FROM THE CONTRACT REQUIREMENTS.

RICK HEBERT (REVIEWER) 2/2/2015 (DATE)

NO.	DATE	REMARKS	BY

REVISIONS

CASCO BAY STEEL STRUCTURES
ONE WALLACE AVENUE
SOUTH PORTLAND, ME 04106
PHONE: 207-780-6722
FAX: 207-780-6726

STRUCTURE	BENMONT AVE. (TH-7) (URBAN MINOR ARTERIAL)
LOCATION	TOWN OF BENNINGTON, VERMONT
PROJECT NO.	BRIDGE NO. 57 PROJECT NO. BRF 1000(16)
ENGINEER	STATE OF VERMONT AGENCY OF TRANSPORTATION
CUSTOMER	ALPINE CONSTRUCTION
ITEM	WEB ℄ FLANGE CUTTING DIAGRAMS
SURFACE PREP.	OPEN HOLES
PAINT	

APPROVAL	DRAWN DMM 12-5-14	SHEET NO. C5	JOB NO. 605
SHOP	CHECKED FM 1-2-15		

1411-4 WC-1411E

Sheet C5 - Plotted: 01/08/2015 @ 08:54 (HEATHER)

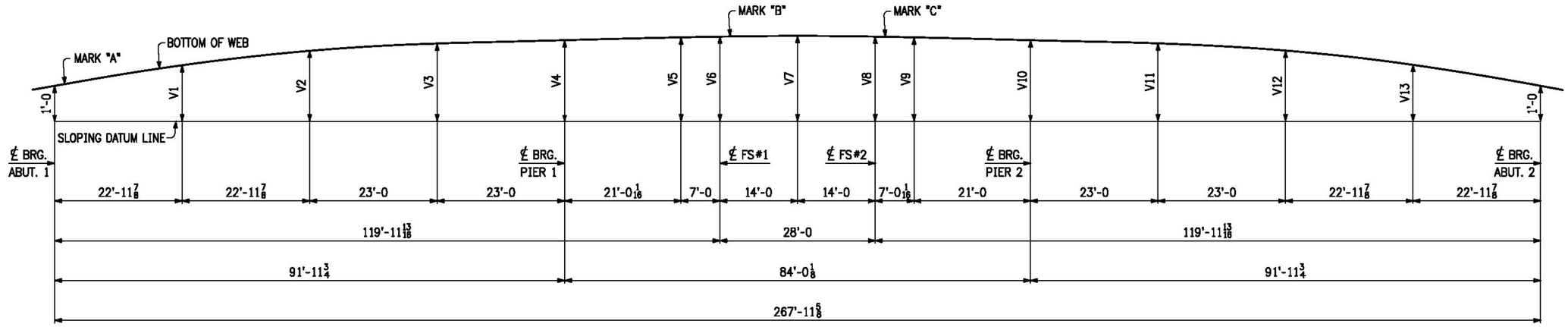

BLOCKING DIAGRAMS

LINE	V1	V2	V3	V4	V5	V6	V7	V8	V9	V10	V11	V12	V13
1 ℄ 2	1'-9 5/16	2'-3 13/16	2'-7 1/8	2'-8 5/8	2'-9 15/16	2'-10 1/4	2'-10 9/16	2'-10 1/4	2'-9 15/16	2'-8 5/8	2'-7 3/16	2'-3 15/16	1'-9 1/2
3	1'-9 5/16	2'-3 13/16	2'-7 1/16	2'-8 9/16	2'-9 7/8	2'-10 3/16	2'-10 1/2	2'-10 3/16	2'-9 7/8	2'-8 9/16	2'-7 3/16	2'-3 15/16	1'-9 7/16
4	1'-9 1/4	2'-3 3/4	2'-7	2'-8 7/16	2'-9 3/4	2'-10 1/16	2'-10 7/16	2'-10 1/8	2'-9 13/16	2'-8 1/2	2'-7 1/8	2'-3 7/8	1'-9 7/16
5	1'-9 3/16	2'-3 5/8	2'-6 7/8	2'-8 1/4	2'-9 9/16	2'-9 15/16	2'-10 1/4	2'-10	2'-9 11/16	2'-8 7/16	2'-7 1/16	2'-3 13/16	1'-9 7/16

NOTES:

1. FOR GENERAL NOTES, SEE DWG. GN1.
2. ALL DIMENSIONS GIVEN AT BOTTOM OF WEB.

T.Y. LIN INTERNATIONAL

THE STAMPED DOCUMENTS ARE HEREBY:

__X__ APPROVED
_____ APPROVED AS NOTED
_____ REVISE AND RESUBMIT

SEE TRANSMITTAL FOR ADDITIONAL INFORMATION AS APPLICABLE.

THIS REVIEW IS FOR GENERAL CONFORMANCE WITH DESIGN CONCEPT ONLY. ANY DEVIATION FROM THE PLANS OR SPECIFICATIONS NOT CLEARLY NOTED BY THE CONTRACTOR HAS NOT BEEN REVIEWED. REVIEW BY THE ENGINEER SHALL NOT RELIEVE THE CONTRACTOR OF THE CONTRACTUAL RESPONSIBILITY FOR ANY ERRORS OR DEVIATION FROM THE CONTRACT REQUIREMENTS.

RICK HEBERT — REVIEWER
2/2/2015 — DATE

NO.	DATE	REMARKS	BY

REVISIONS

CASCO BAY STEEL STRUCTURES
ONE WALLACE AVENUE
SOUTH PORTLAND, ME 04106
PHONE: 207-780-6722
FAX: 207-780-6726

STRUCTURE: BENMONT AVE. (TH-7) (URBAN MINOR ARTERIAL)
LOCATION: TOWN OF BENNINGTON, VERMONT
PROJECT NO.: BRIDGE NO. 57 PROJECT NO. BRF 1000(16)
ENGINEER: STATE OF VERMONT AGENCY OF TRANSPORTATION
CUSTOMER: ALPINE CONSTRUCTION
ITEM: SHOP ASSEMBLY DIAGRAMS
SURFACE PREP. _____ OPEN HOLES _____
PAINT _____

APPROVAL	DRAWN MAY 12-8-14	SHEET NO.	JOB NO.
SHOP	CHECKED GDC 12-11-14	SA1	605

1411-5

BLK-1411

Sheet SA1 - Plotted: 01/28/2015 @ 08:34 (WEATHERD)

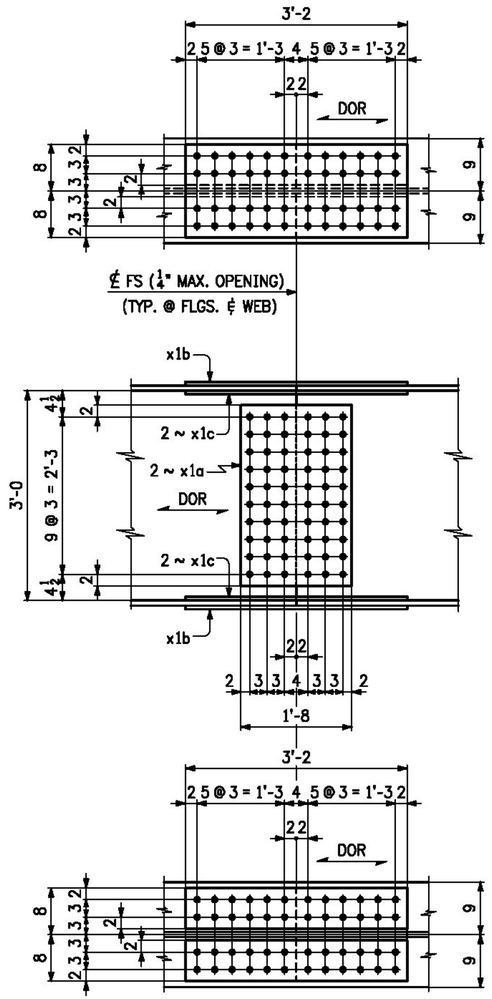

10 ~ FIELD SPLICE ~ X1M1
(FS#1 ℄ 2)

T.Y. LIN INTERNATIONAL

THE STAMPED DOCUMENTS ARE HEREBY:

__X__ APPROVED
_____ APPROVED AS NOTED
_____ REVISE AND RESUBMIT

SEE TRANSMITTAL FOR ADDITIONAL INFORMATION AS APPLICABLE.

THIS REVIEW IS FOR GENERAL CONFORMANCE WITH DESIGN CONCEPT ONLY. ANY DEVIATION FROM THE PLANS OR SPECIFICATIONS NOT CLEARLY NOTED BY THE CONTRACTOR HAS NOT BEEN REVIEWED. REVIEW BY THE ENGINEER SHALL NOT RELIEVE THE CONTRACTOR OF THE CONTRACTUAL RESPONSIBILITY FOR ANY ERRORS OR DEVIATION FROM THE CONTRACT REQUIREMENTS.

RICK HEBERT — REVIEWER
2/2/2015 — DATE

LINE	NO. OF PCS.	SHIP MARK	ASS'Y MARK	MATERIAL						REMARKS
				SHAPE	SECTION	LENGTH FT.	LENGTH IN.	MATERIAL SPEC.	ITEM NO.	
1	10	X1M1			FIELD SPLICE					6607 lbs.
2	20		x1a	PL	½ x 31	1	8	M270-50WT2	3/2	1758 lbs.
3	20		x1b	PL	¾ x 16	3	2	M270-50WT2	3/4	2586 lbs.
4	40		x1c	PL	¾ x 7	3	2	M270-50WT2	3/6	2263 lbs.
5										
6										
7										
8										
9										
10										
11										
12										
13										
14										
15										
16										
17										
18										
19										
20										
21										
22										
23										
24										
25										

NOTES:

1. FOR GENERAL NOTES, SEE SHT. GN1.
2. HOLES IN SPLICE PLATES ARE PRE-DRILLED. ENDS OF GIRDERS ARE DRILLED FROM SOLID USING SPLICE PLATES AS A TEMPLATE.
3. DOR ⟶ DENOTES DIRECTION OF MILL ROLLING.

NO.	DATE	REMARKS	BY
		REVISIONS	

CASCO BAY STEEL STRUCTURES
ONE WALLACE AVENUE
SOUTH PORTLAND, ME 04106
PHONE: 207-780-6722
FAX: 207-780-6726

STRUCTURE: BENMONT AVE. (TH-7) (URBAN MINOR ARTERIAL)
LOCATION: TOWN OF BENNINGTON, VERMONT
PROJECT NO.: BRIDGE NO. 57 PROJECT NO. BRF 1000(16)
ENGINEER: STATE OF VERMONT AGENCY OF TRANSPORTATION
CUSTOMER: ALPINE CONSTRUCTION
ITEM: FIELD SPLICE DETAILS
SURFACE PREP.: SEE SHT. GN1 OPEN HOLES: 15/16ø
PAINT: NONE

APPROVAL		DRAWN	GDC	12-5-14	SHEET NO.	JOB NO.
SHOP		CHECKED	PM	12-30-14	X1	605

1411-9 FS1-1411

Sheet X1 - Plotted: 01/09/2015 @ 08:39 (HEATHER)

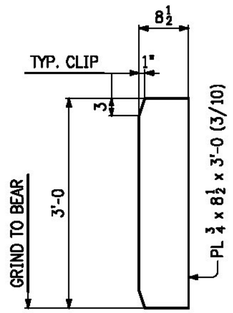

DET. OF PC. ~ x2a
(40 ~ REQ'D)
(@ ABUT. & PIER - BRG. STIFF)

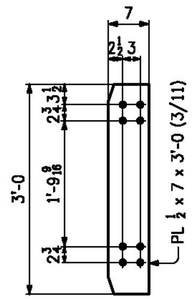

DET. OF PC. ~ x2b
(30 ~ REQ'D)
(CROSSFRAME CONN. PL. LOW)

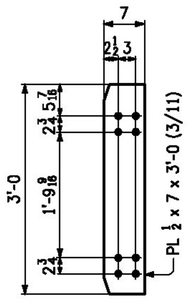

DET. OF PC. ~ x2c
(30 ~ REQ'D)
(CROSSFRAME CONN. PL. HIGH)

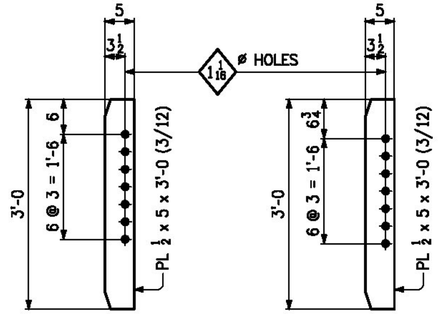

DET. OF PC. ~ x2d
(15 ~ REQ'D)
(DIAPHRAGM CONN. PL. LOW ~ LINE 4)

DET. OF PC. ~ x2f
(15 ~ REQ'D)
(DIAPHRAGM CONN. PL. HIGH ~ LINE 3)

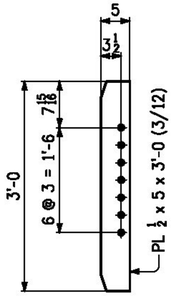

DET. OF PC. ~ x2g
(15 ~ REQ'D)
(DIAPHRAGM CONN. PL. HIGH ~ LINE 4)

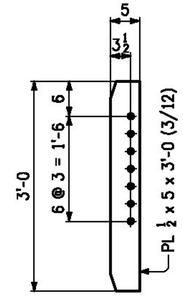

DET. OF PC. ~ x2w
(15 ~ REQ'D)
(DIAPHRAGM CONN. PL. LOW ~ LINE 5)

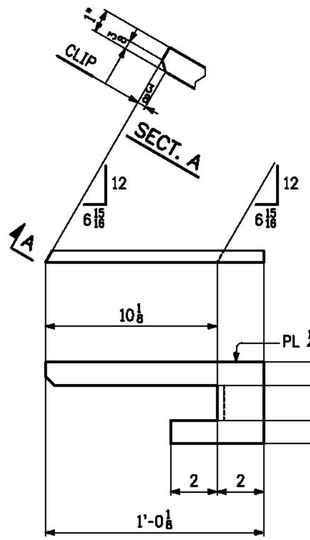

2 ~ DRIP BARS ~ x2n
(PIER 1 LINE 1)
(PIER 2 LINE 5)

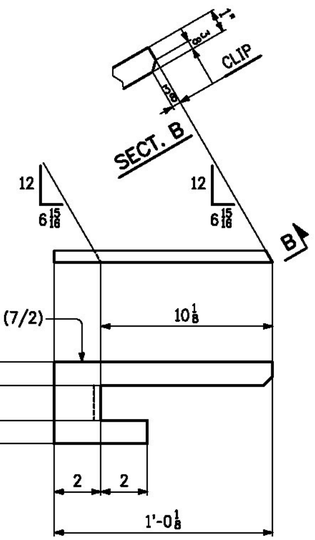

2 ~ DRIP BARS ~ x2p
(PIER 1 LINE 5)
(PIER 2 LINE 1)

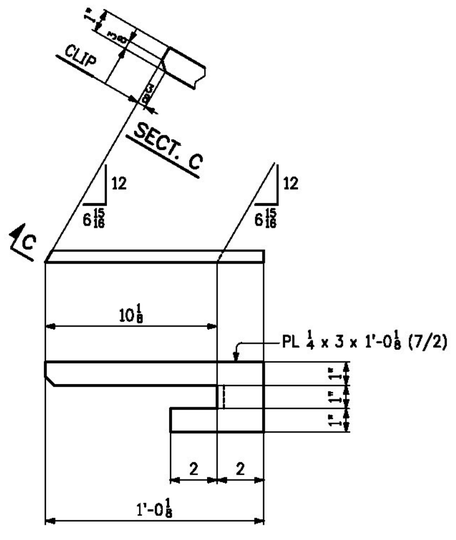

2 ~ DRIP BARS ~ x2t
(ABUT 1 LINE 1)
(ABUT 2 LINE 5)

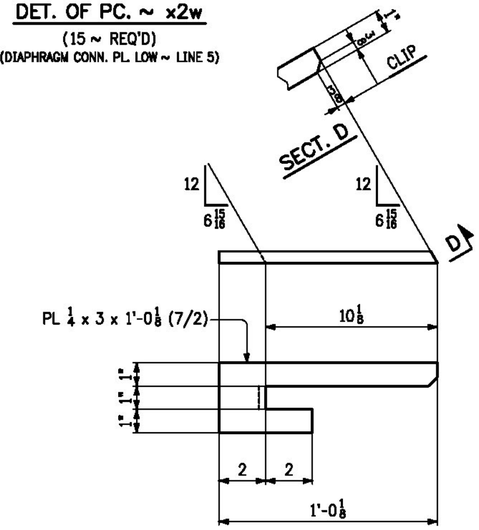

2 ~ DRIP BARS ~ x2v
(ABUT 1 LINE 5)
(ABUT 2 LINE 1)

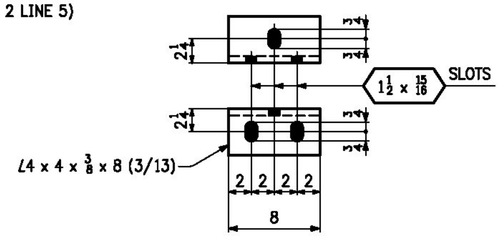

13 ~ SUPPORT ANGLES MK. x2k
(UTILITY SUPPORT GDR. LINE 3)

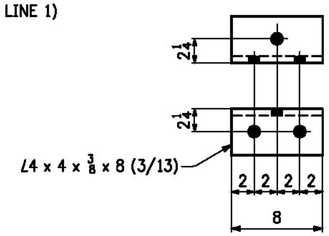

13 ~ SUPPORT ANGLES MK. x2m
(UTILITY SUPPORT GDR. LINE 2)

NOTES:

1. FOR GENERAL NOTES, SEE SHT. GN1.
2. MATERIAL TO BE M270-50W.

T.Y. LIN INTERNATIONAL

THE STAMPED DOCUMENTS ARE HEREBY:

__X__ APPROVED
_____ APPROVED AS NOTED
_____ REVISE AND RESUBMIT

SEE TRANSMITTAL FOR ADDITIONAL INFORMATION AS APPLICABLE.

THIS REVIEW IS FOR GENERAL CONFORMANCE WITH DESIGN CONCEPT ONLY. ANY DEVIATION FROM THE PLANS OR SPECIFICATIONS NOT CLEARLY NOTED BY THE CONTRACTOR HAS NOT BEEN REVIEWED. REVIEW BY THE ENGINEER SHALL NOT RELIEVE THE CONTRACTOR OF THE CONTRACTUAL RESPONSIBILITY FOR ANY ERRORS OR DEVIATION FROM THE CONTRACT REQUIREMENTS.

RICK HEBERT — REVIEWER
2/2/2015 — DATE

NO.	DATE	REMARKS	BY
		REVISIONS	

CASCO BAY STEEL STRUCTURES
ONE WALLACE AVENUE
SOUTH PORTLAND, ME 04106
PHONE: 207-780-6722
FAX: 207-780-6726

STRUCTURE	BENMONT AVE. (TH-7) (URBAN MINOR ARTERIAL)
LOCATION	TOWN OF BENNINGTON, VERMONT
PROJECT NO.	BRIDGE NO. 57 PROJECT NO. BRF 1000(16)
ENGINEER	STATE OF VERMONT AGENCY OF TRANSPORTATION
CUSTOMER	ALPINE CONSTRUCTION
ITEM	GIRDER STANDARDS
SURFACE PREP.	— OPEN HOLES 15/16ø (UN)
PAINT	—

APPROVAL	DRAWN	GDC	12-5-14	SHEET NO. X2	JOB NO. 605
SHOP	CHECKED	PM	12-30-14		

1411-9 STD1-1411

Sheet X2 - Plotted: 01/08/2015 @ 08:36 (HEATHER)

Spacing of waterline support beams are not all at 9'-0" spaces as shown on Contract Drawing Sheet 39 of 75. Maximum variation appears to be 9". The increase in span is acceptable, however the Contractor should refer to the Special Provision (Water Main on Bridge) to ensure compliance with the hanger distance to pipe joint requirements are also met.

T.Y. LIN INTERNATIONAL

THE STAMPED DOCUMENTS ARE HEREBY:

____ APPROVED
_X_ APPROVED AS NOTED
____ REVISE AND RESUBMIT

SEE TRANSMITTAL FOR ADDITIONAL INFORMATION AS APPLICABLE.

THIS REVIEW IS FOR GENERAL CONFORMANCE WITH DESIGN CONCEPT ONLY. ANY DEVIATION FROM THE PLANS OR SPECIFICATIONS NOT CLEARLY NOTED BY THE CONTRACTOR HAS NOT BEEN REVIEWED. REVIEW BY THE ENGINEER SHALL NOT RELIEVE THE CONTRACTOR OF THE CONTRACTUAL RESPONSIBILITY FOR ANY ERRORS OR DEVIATION FROM THE CONTRACT REQUIREMENTS.

RICK HEBERT — REVIEWER
2/2/2015 — DATE

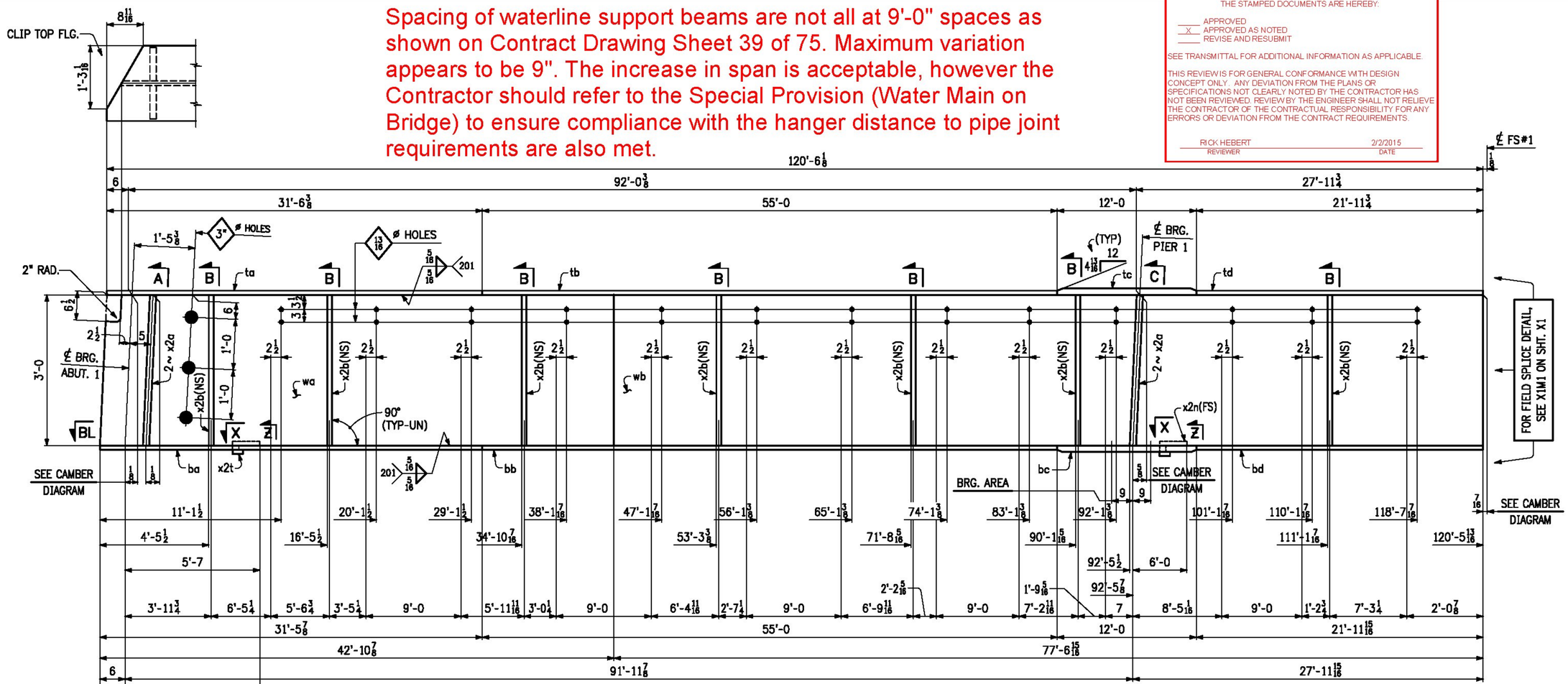

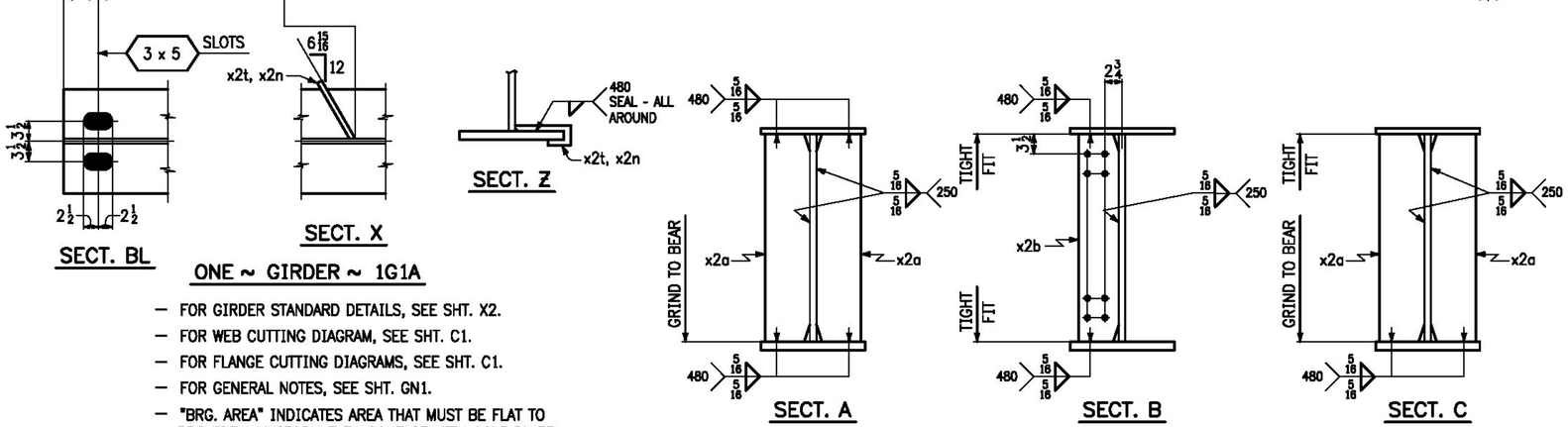

ONE ~ GIRDER ~ 1G1A

- FOR GIRDER STANDARD DETAILS, SEE SHT. X2.
- FOR WEB CUTTING DIAGRAM, SEE SHT. C1.
- FOR FLANGE CUTTING DIAGRAMS, SEE SHT. C1.
- FOR GENERAL NOTES, SEE SHT. GN1.
- "BRG. AREA" INDICATES AREA THAT MUST BE FLAT TO PROVIDE A UNIFORM EVEN CONTACT WITH SOLE PLATE.

NO.	DATE	REMARKS	BY

REVISIONS

CASCO BAY STEEL STRUCTURES
ONE WALLACE AVENUE
SOUTH PORTLAND, ME 04106
PHONE: 207-780-6722
FAX: 207-780-6726

STRUCTURE	BENMONT AVE. (TH-7) (URBAN MINOR ARTERIAL)
LOCATION	TOWN OF BENNINGTON, VERMONT
PROJECT NO.	BRIDGE NO. 57 PROJECT NO. BRF 1000(16)
ENGINEER	STATE OF VERMONT AGENCY OF TRANSPORTATION
CUSTOMER	ALPINE CONSTRUCTION
ITEM	GIRDER ~ 1G1A
SURFACE PREP.	SSPC-SP10 OPEN HOLES 15/16ø (UN)
PAINT	NONE

APPROVAL	DRAWN GDC 12-5-14	SHEET NO.	JOB NO.
SHOP	CHECKED PM 1-3-15	1AB	605

1411-9 G1A-1411

Sheet 01AB - Plotted: 01/08/2015 @ 08:38 (HEATHER)

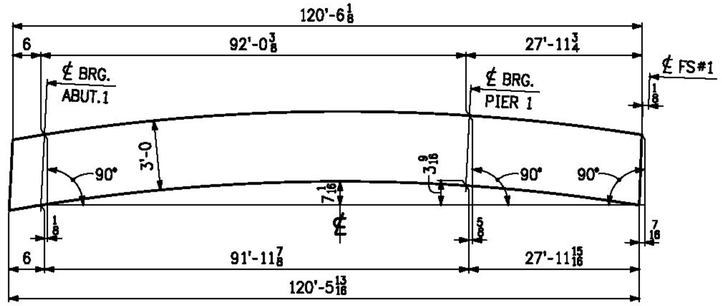

CAMBER DIAGRAM

LINE	NO. OF PCS.	SHIP MARK	ASS'Y MARK	MATERIAL SHAPE	SECTION	LENGTH FT.	LENGTH IN.	MATERIAL SPEC.	ITEM NO.	REMARKS
1	1	1G1A			GIRDER					23,122 lbs.
2	1		wa	PL	1/2 x 36	42	11 5/16	M270-50WT2	1/17	2630 lbs.
3	1		wb	PL	1/2 x 36	77	7 9/16	M270-50WT2	1/12	4755 lbs.
4	1		ta	PL	1 x 18	31	6 3/8	M270-50WT2	2/8	1931 lbs.
5	1		tb	PL	1 x 18	55	0	M270-50WT2	2/6	3369 lbs.
6	1		tc	PL	1 1/8 x 18	12	0	M270-50WT2	2/2	1011 lbs.
7	1		td	PL	1 x 18	21	11 3/4	M270-50WT2	2/9	1346 lbs.
8	1		ba	PL	1 x 18	31	5 7/8	M270-50WT2	2/7	1929 lbs.
9	1		bb	PL	1 x 18	55	0	M270-50WT2	2/6	3369 lbs.
10	1		bc	PL	1 1/4 x 18	12	0	M270-50WT2	2/4	919 lbs.
11	1		bd	PL	1 x 18	21	11 15/16	M270-50WT2	2/9	1347 lbs.
12										
13	4		x2a	PL	3/4 x 8 1/2	3	0	M270-50W	3/10	G1E 260 lbs.
14	7		x2b	PL	1/2 x 7	3	0	M270-50W	3/11	250 lbs.
15	1		x2n	PL	1/4 x 3 1/4	1	0 1/8	M270-50W	7/2	3 lbs.
16	1		x2t	PL	1/4 x 3	1	0 1/8	M270-50W	7/2	3 lbs.
17										
18										
19										
20										
21										
22										
23										
24										
25										

T.Y. LIN INTERNATIONAL

THE STAMPED DOCUMENTS ARE HEREBY:

__X__ APPROVED
_____ APPROVED AS NOTED
_____ REVISE AND RESUBMIT

SEE TRANSMITTAL FOR ADDITIONAL INFORMATION AS APPLICABLE.

THIS REVIEW IS FOR GENERAL CONFORMANCE WITH DESIGN CONCEPT ONLY. ANY DEVIATION FROM THE PLANS OR SPECIFICATIONS NOT CLEARLY NOTED BY THE CONTRACTOR HAS NOT BEEN REVIEWED. REVIEW BY THE ENGINEER SHALL NOT RELIEVE THE CONTRACTOR OF THE CONTRACTUAL RESPONSIBILITY FOR ANY ERRORS OR DEVIATION FROM THE CONTRACT REQUIREMENTS.

RICK HEBERT — REVIEWER
2/2/2015 — DATE

NO.	DATE	REMARKS	BY

REVISIONS

CASCO BAY STEEL STRUCTURES
ONE WALLACE AVENUE
SOUTH PORTLAND, ME 04106
PHONE: 207-780-6722
FAX: 207-780-6726

STRUCTURE: BENMONT AVE. (TH-7) (URBAN MINOR ARTERIAL)
LOCATION: TOWN OF BENNINGTON, VERMONT
PROJECT NO.: BRIDGE NO. 57 PROJECT NO. BRF 1000(16)
ENGINEER: STATE OF VERMONT AGENCY OF TRANSPORTATION
CUSTOMER: ALPINE CONSTRUCTION
ITEM: GIRDER ~ 1G1A
SURFACE PREP.: SSPC-SP10 OPEN HOLES:
PAINT: NONE

APPROVAL	DRAWN	GDC	12-8-14	SHEET NO. 1B	JOB NO. 605
SHOP	CHECKED	PM	1-3-15		

1411-9

G1A-1411B

Sheet 018 - Plotted 01/06/2015 @ 08:38 (HEATHER)

T.Y. LIN INTERNATIONAL

THE STAMPED DOCUMENTS ARE HEREBY:

X APPROVED
APPROVED AS NOTED
REVISE AND RESUBMIT

SEE TRANSMITTAL FOR ADDITIONAL INFORMATION AS APPLICABLE.

THIS REVIEW IS FOR GENERAL CONFORMANCE WITH DESIGN CONCEPT ONLY. ANY DEVIATION FROM THE PLANS OR SPECIFICATIONS NOT CLEARLY NOTED BY THE CONTRACTOR HAS NOT BEEN REVIEWED. REVIEW BY THE ENGINEER SHALL NOT RELIEVE THE CONTRACTOR OF THE CONTRACTUAL RESPONSIBILITY FOR ANY ERRORS OR DEVIATION FROM THE CONTRACT REQUIREMENTS.

RICK HEBERT — REVIEWER
2/2/2015 — DATE

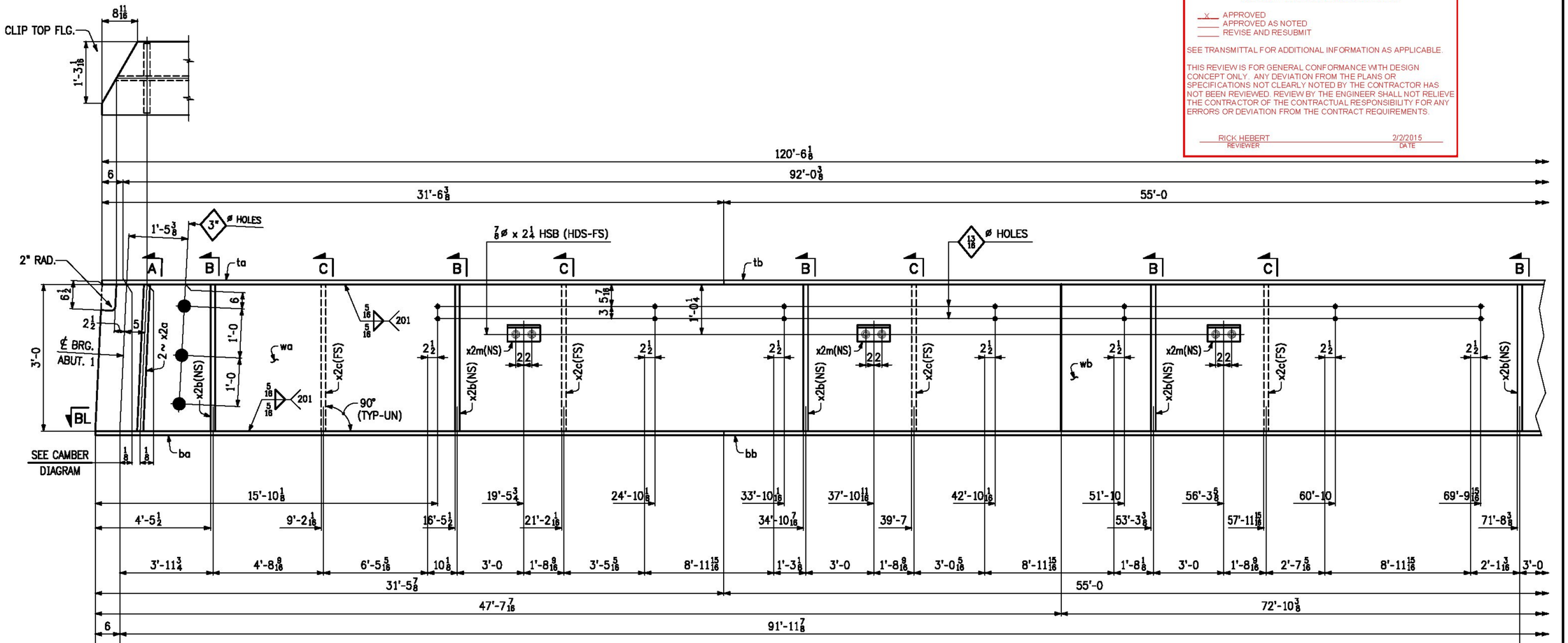

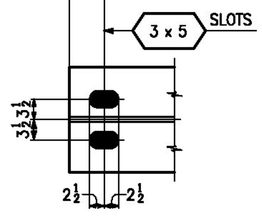

SECT. BL

ONE ~ GIRDER ~ 2G2A

- FOR GIRDER STANDARD DETAILS, SEE SHT. X2.
- FOR WEB CUTTING DIAGRAM, SEE SHT. C1.
- FOR FLANGE CUTTING DIAGRAMS, SEE SHT. C1.
- FOR GENERAL NOTES, SEE SHT. GN1.
- "BRG. AREA" INDICATES AREA THAT MUST BE FLAT TO PROVIDE A UNIFORM EVEN CONTACT WITH SOLE PLATE.

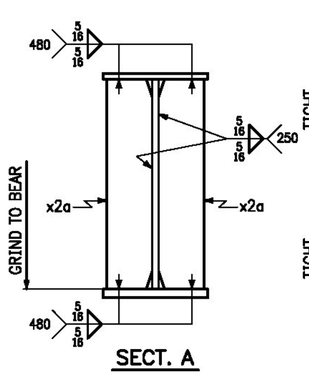

SECT. A

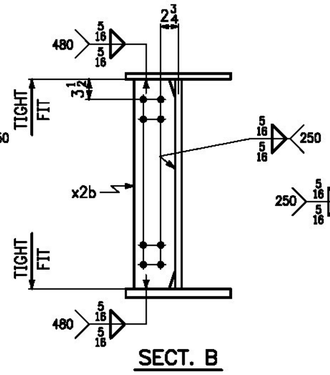

SECT. B

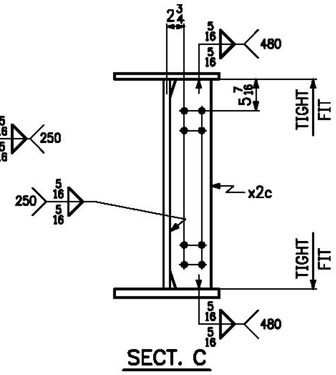

SECT. C

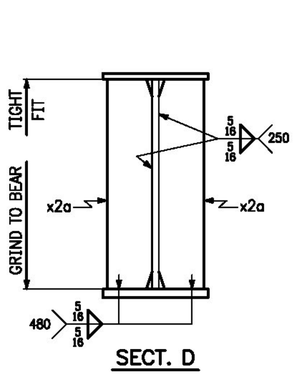

SECT. D

NO.	DATE	REMARKS	BY
		REVISIONS	

CASCO BAY STEEL STRUCTURES

CASCO BAY STEEL STRUCTURES
ONE WALLACE AVENUE
SOUTH PORTLAND, ME 04106
PHONE: 207-780-6722
FAX: 207-780-6726

STRUCTURE	BENMONT AVE. (TH-7) (URBAN MINOR ARTERIAL)
LOCATION	TOWN OF BENNINGTON, VERMONT
PROJECT NO.	BRIDGE NO. 57 PROJECT NO. BRF 1000(16)
ENGINEER	STATE OF VERMONT AGENCY OF TRANSPORTATION
CUSTOMER	ALPINE CONSTRUCTION
ITEM	GIRDER ~ 2G2A
SURFACE PREP.	SSPC-SP10
OPEN HOLES	15/16ø (UN)
PAINT	NONE

APPROVAL	DRAWN	GDC	12-8-14	SHEET NO. 2AB	JOB NO. 605
SHOP	CHECKED	PM	1-3-15		

1411-9

G2A-1411

Sheet 02A9 - Plotted: 01/09/2015 @ 08:36 (HEATHEN)

Spacing of waterline support beams are not all at 9'-0" spaces as shown on Contract Drawing Sheet 39 of 75. Maximum variation appears to be 9". The increase in span is acceptable, however the Contractor should refer to the Special Provision (Water Main on Bridge) to ensure compliance with the hanger distance to pipe joint requirements are also met.

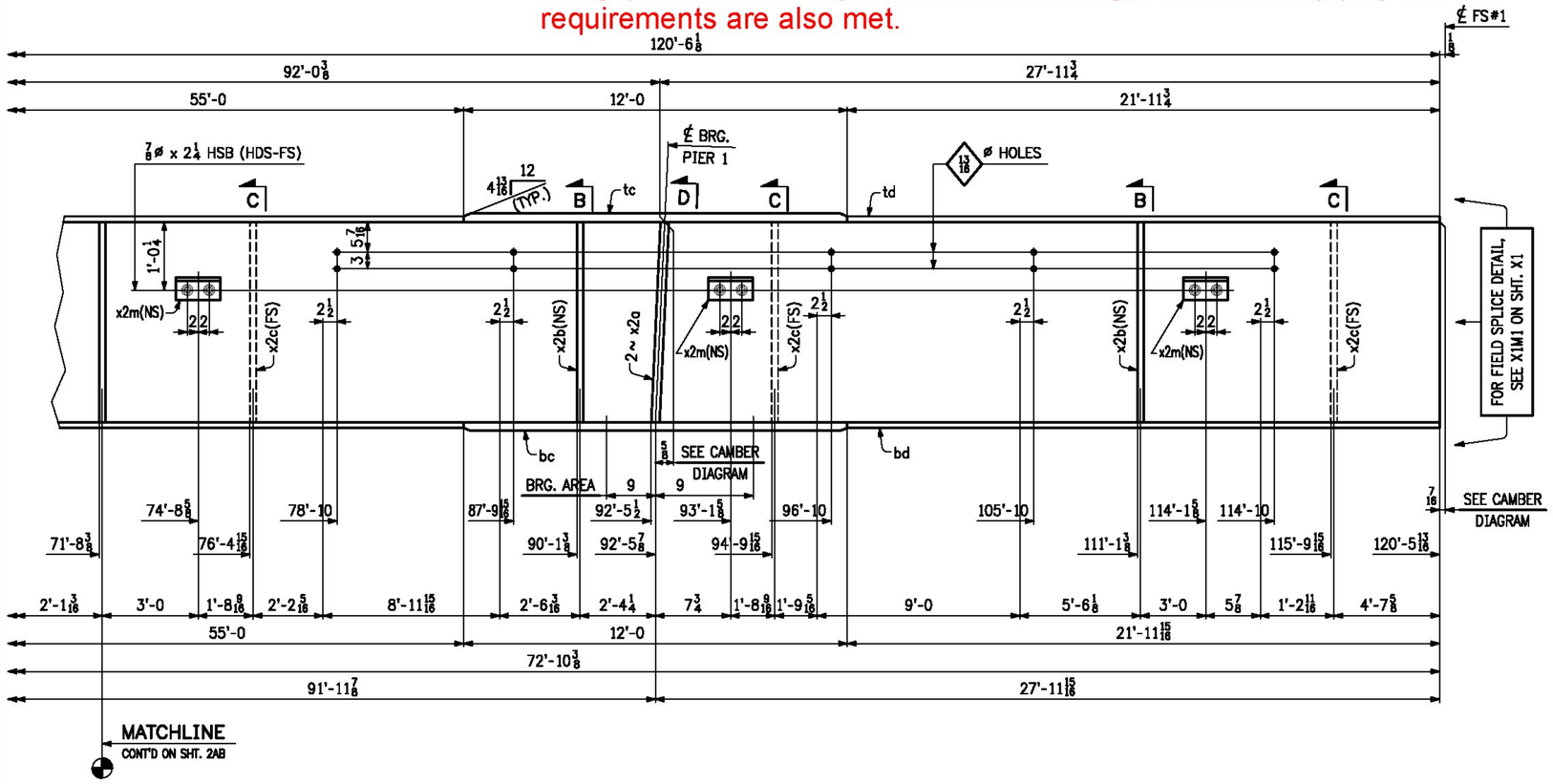

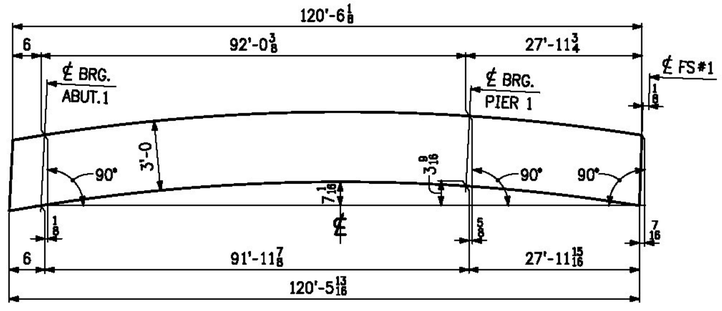

CAMBER DIAGRAM

LINE	NO. OF PCS.	SHIP MARK	ASS'Y MARK	MATERIAL SHAPE	SECTION	LENGTH FT.	LENGTH IN.	MATERIAL SPEC.	ITEM NO.	REMARKS
1	1	2G2A			GIRDER					23,405 lbs.
2	1		wa	PL	1/2 x 36	47	7 15/16	M270-50WT2	1/16	2919 lbs.
3	1		wb	PL	1/2 x 36	72	10 7/8	M270-50WT2	1/13	4466 lbs.
4	1		ta	PL	1 x 18	31	6 3/8	M270-50WT2	2/8	1931 lbs.
5	1		tb	PL	1 x 18	55	0	M270-50WT2	2/6	3369 lbs.
6	1		tc	PL	1 3/8 x 18	12	0	M270-50WT2	2/2	1011 lbs.
7	1		td	PL	1 x 18	21	11 3/4	M270-50WT2	2/9	1346 lbs.
8	1		ba	PL	1 x 18	31	5 7/8	M270-50WT2	2/7	1929 lbs.
9	1		bb	PL	1 x 18	55	0	M270-50WT2	2/6	3369 lbs.
10	1		bc	PL	1 1/4 x 18	12	0	M270-50WT2	2/4	919 lbs.
11	1		bd	PL	1 x 18	21	11 15/16	M270-50WT2	2/9	1347 lbs.
12										
13	4		x2a	PL	3/4 x 8 1/2	3	0	M270-50W	3/10	G1E 260 lbs.
14	7		x2b	PL	1/2 x 7	3	0	M270-50W	3/11	250 lbs.
15	7		x2c	PL	1/2 x 7	3	0	M270-50W	3/11	250 lbs.
16	6		x2m	L	4 x 4 x 3/8	0	8	M270-50W	3/13	39 lbs.
17										
18	12				7/8ø HSB	0	2 1/4	M164 TYPE 3	6/2	
19	12				7/8ø WASHER			M293-3	6/6	
20										
21										
22										
23										
24										
25										

T.Y. LIN INTERNATIONAL

THE STAMPED DOCUMENTS ARE HEREBY:

____ APPROVED
__X__ APPROVED AS NOTED
____ REVISE AND RESUBMIT

SEE TRANSMITTAL FOR ADDITIONAL INFORMATION AS APPLICABLE.

THIS REVIEW IS FOR GENERAL CONFORMANCE WITH DESIGN CONCEPT ONLY. ANY DEVIATION FROM THE PLANS OR SPECIFICATIONS NOT CLEARLY NOTED BY THE CONTRACTOR HAS NOT BEEN REVIEWED. REVIEW BY THE ENGINEER SHALL NOT RELIEVE THE CONTRACTOR OF THE CONTRACTUAL RESPONSIBILITY FOR ANY ERRORS OR DEVIATION FROM THE CONTRACT REQUIREMENTS.

RICK HEBERT — REVIEWER
2/2/2015 — DATE

NO.	DATE	REMARKS	BY
		REVISIONS	

CASCO BAY STEEL STRUCTURES
ONE WALLACE AVENUE
SOUTH PORTLAND, ME 04106
PHONE: 207-780-6722
FAX: 207-780-6726

STRUCTURE: BENMONT AVE. (TH-7) (URBAN MINOR ARTERIAL)
LOCATION: TOWN OF BENNINGTON, VERMONT
PROJECT NO.: BRIDGE NO. 57 PROJECT NO. BRF 1000(16)
ENGINEER: STATE OF VERMONT AGENCY OF TRANSPORTATION
CUSTOMER: ALPINE CONSTRUCTION
ITEM: GIRDER ~ 2G2A
SURFACE PREP.: SSPC-SP10 OPEN HOLES: 15/16ø (UN)
PAINT: NONE

APPROVAL	DRAWN	GDC	12-8-14	SHEET NO.	JOB NO.
SHOP	CHECKED	FM	1-3-15	2B	605

1411-9

G2A-1411B

Sheet I:\29 - Plotted: 01/09/2015 @ 08:39 (HEATHER)

T.Y. LIN INTERNATIONAL
THE STAMPED DOCUMENTS ARE HEREBY:
X APPROVED
APPROVED AS NOTED
REVISE AND RESUBMIT
SEE TRANSMITTAL FOR ADDITIONAL INFORMATION AS APPLICABLE.
THIS REVIEW IS FOR GENERAL CONFORMANCE WITH DESIGN CONCEPT ONLY. ANY DEVIATION FROM THE PLANS OR SPECIFICATIONS NOT CLEARLY NOTED BY THE CONTRACTOR HAS NOT BEEN REVIEWED. REVIEW BY THE ENGINEER SHALL NOT RELIEVE THE CONTRACTOR OF THE CONTRACTUAL RESPONSIBILITY FOR ANY ERRORS OR DEVIATION FROM THE CONTRACT REQUIREMENTS.
RICK HEBERT — REVIEWER
2/2/2015 — DATE

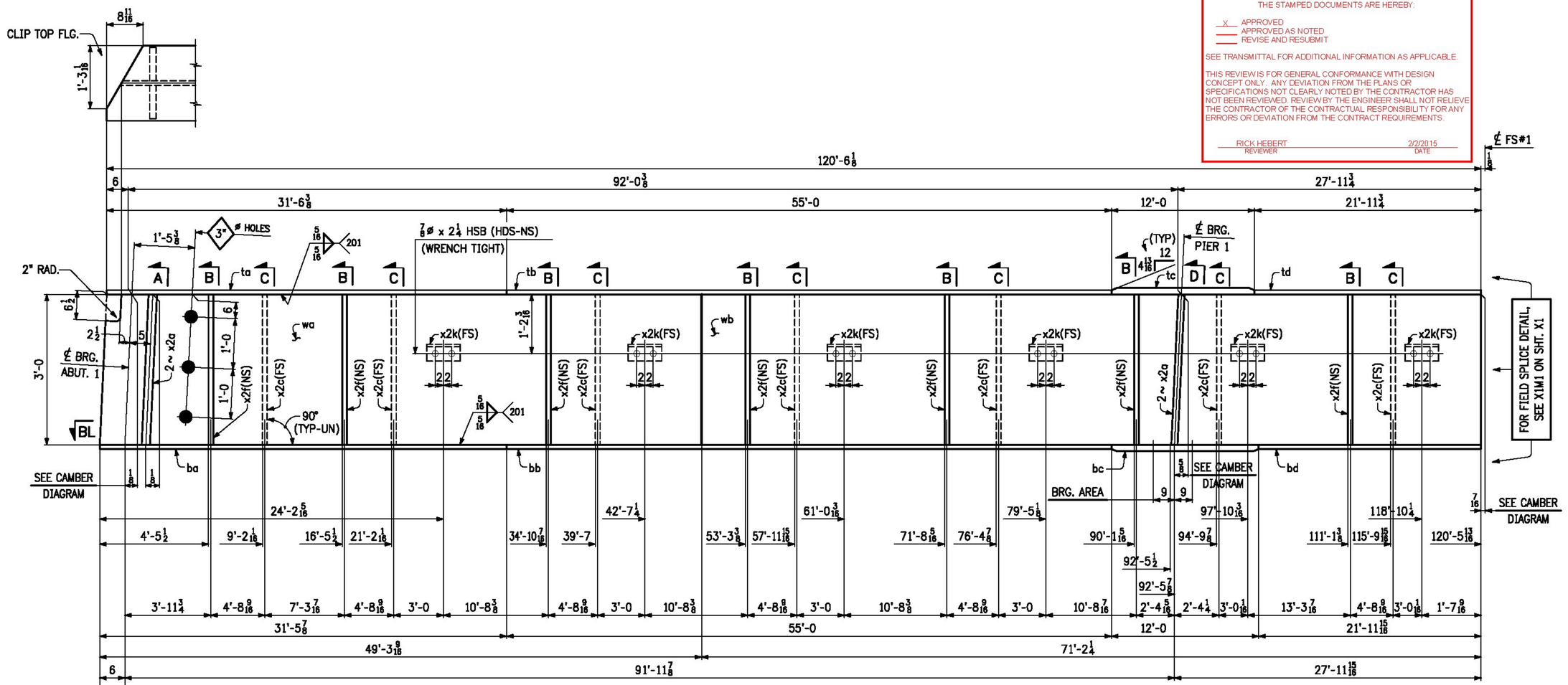

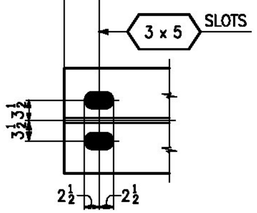

SECT. BL

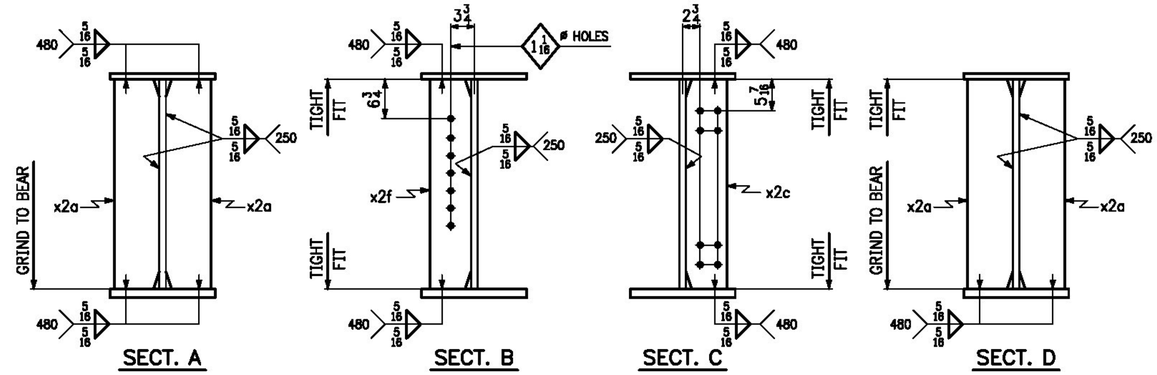

SECT. A SECT. B SECT. C SECT. D

ONE ~ GIRDER ~ 3G3A

- FOR GIRDER STANDARD DETAILS, SEE SHT. X2.
- FOR WEB CUTTING DIAGRAM, SEE SHT. C2.
- FOR FLANGE CUTTING DIAGRAMS, SEE SHT. C2.
- FOR GENERAL NOTES, SEE SHT. GN1.
- "BRG. AREA" INDICATES AREA THAT MUST BE FLAT TO PROVIDE A UNIFORM EVEN CONTACT WITH SOLE PLATE.

NO.	DATE	REMARKS	BY

REVISIONS

CASCO BAY STEEL STRUCTURES
ONE WALLACE AVENUE, SOUTH PORTLAND, ME 04106
PHONE: 207-780-6722
FAX: 207-780-6726

STRUCTURE	BENMONT AVE. (TH-7) (URBAN MINOR ARTERIAL)
LOCATION	TOWN OF BENNINGTON, VERMONT
PROJECT NO.	BRIDGE NO. 57 PROJECT NO. BRF 1000(16)
ENGINEER	STATE OF VERMONT AGENCY OF TRANSPORTATION
CUSTOMER	ALPINE CONSTRUCTION
ITEM	GIRDER ~ 3G3A
SURFACE PREP.	SSPC-SP10 OPEN HOLES 15/16ø (UN)
PAINT	NONE

APPROVAL	DRAWN GDC 12-5-14	SHEET NO.	JOB NO.
SHOP	CHECKED FM 1-5-15	3AB	605

1411-9 G3A-1411

Sheet 03AB - Plotted: 01/06/2015 @ 08:36 (HEATHER)

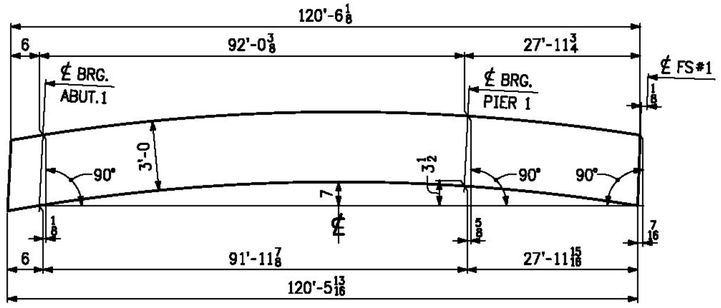

CAMBER DIAGRAM

LINE	NO. OF PCS.	SHIP MARK	ASS'Y MARK	MATERIAL SHAPE	SECTION	LENGTH FT.	LENGTH IN.	MATERIAL SPEC.	ITEM NO.	REMARKS
1	1	3G3A			GIRDER					23,334 lbs.
2	1		wa	PL	1/2 x 36	49	4 1/16	M270-50WT2	1/15	3022 lbs.
3	1		wb	PL	1/2 x 36	71	2 3/4	M270-50WT2	1/14	4363 lbs.
4	1		ta	PL	1 x 18	31	6 3/8	M270-50WT2	2/8	1931 lbs.
5	1		tb	PL	1 x 18	55	0	M270-50WT2	2/6	3369 lbs.
6	1		tc	PL	1 1/8 x 18	12	0	M270-50WT2	2/2	1011 lbs.
7	1		td	PL	1 x 18	21	11 3/4	M270-50WT2	2/9	1346 lbs.
8	1		ba	PL	1 x 18	31	5 7/8	M270-50WT2	2/7	1929 lbs.
9	1		bb	PL	1 x 18	55	0	M270-50WT2	2/6	3369 lbs.
10	1		bc	PL	1 1/4 x 18	12	0	M270-50WT2	2/4	919 lbs.
11	1		bd	PL	1 x 18	21	11 15/16	M270-50WT2	2/9	1347 lbs.
12										
13	4		x2a	PL	3/4 x 8 1/2	3	0	M270-50W	3/10	G1E 260 lbs.
14	7		x2c	PL	1/2 x 7	3	0	M270-50W	3/11	250 lbs.
15	7		x2f	PL	1/2 x 5	3	0	M270-50W	3/12	179 lbs.
16	6		x2k	L	4 x 4 x 3/8	0	8	M270-50W	3/13	39 lbs.
17										
18	12				7/8ø HSB	0	2 1/4	M164 TYPE 3	6/2	
19	12				7/8ø WASHER			M293-3	6/6	
20										
21										
22										
23										
24										
25										

T.Y. LIN INTERNATIONAL

THE STAMPED DOCUMENTS ARE HEREBY:

__X__ APPROVED
_____ APPROVED AS NOTED
_____ REVISE AND RESUBMIT

SEE TRANSMITTAL FOR ADDITIONAL INFORMATION AS APPLICABLE.

THIS REVIEW IS FOR GENERAL CONFORMANCE WITH DESIGN CONCEPT ONLY. ANY DEVIATION FROM THE PLANS OR SPECIFICATIONS NOT CLEARLY NOTED BY THE CONTRACTOR HAS NOT BEEN REVIEWED. REVIEW BY THE ENGINEER SHALL NOT RELIEVE THE CONTRACTOR OF THE CONTRACTUAL RESPONSIBILITY FOR ANY ERRORS OR DEVIATION FROM THE CONTRACT REQUIREMENTS.

RICK HEBERT — REVIEWER
2/2/2015 — DATE

NO.	DATE	REMARKS	BY

REVISIONS

CASCO BAY STEEL STRUCTURES
ONE WALLACE AVENUE
SOUTH PORTLAND, ME 04106
PHONE: 207-780-6722
FAX: 207-780-6726

STRUCTURE: BENMONT AVE. (TH-7) (URBAN MINOR ARTERIAL)
LOCATION: TOWN OF BENNINGTON, VERMONT
PROJECT NO.: BRIDGE NO. 57 PROJECT NO. BRF 1000(16)
ENGINEER: STATE OF VERMONT AGENCY OF TRANSPORTATION
CUSTOMER: ALPINE CONSTRUCTION
ITEM: GIRDER ~ 3G3A
SURFACE PREP.: SSPC-SP10 OPEN HOLES:
PAINT: NONE

APPROVAL	DRAWN	GDC	12-9-14	SHEET NO.	JOB NO.
SHOP	CHECKED	PM	1-5-15	3B	605

1411-9

G3A-1411B

Sheet D3B - Plotted: 01/06/2015 @ 08:37 (HEATHEN)

T.Y. LIN INTERNATIONAL

THE STAMPED DOCUMENTS ARE HEREBY:

_X_ APPROVED
___ APPROVED AS NOTED
___ REVISE AND RESUBMIT

SEE TRANSMITTAL FOR ADDITIONAL INFORMATION AS APPLICABLE.

THIS REVIEW IS FOR GENERAL CONFORMANCE WITH DESIGN CONCEPT ONLY. ANY DEVIATION FROM THE PLANS OR SPECIFICATIONS NOT CLEARLY NOTED BY THE CONTRACTOR HAS NOT BEEN REVIEWED. REVIEW BY THE ENGINEER SHALL NOT RELIEVE THE CONTRACTOR OF THE CONTRACTUAL RESPONSIBILITY FOR ANY ERRORS OR DEVIATION FROM THE CONTRACT REQUIREMENTS.

RICK HEBERT — REVIEWER — 2/2/2015 — DATE

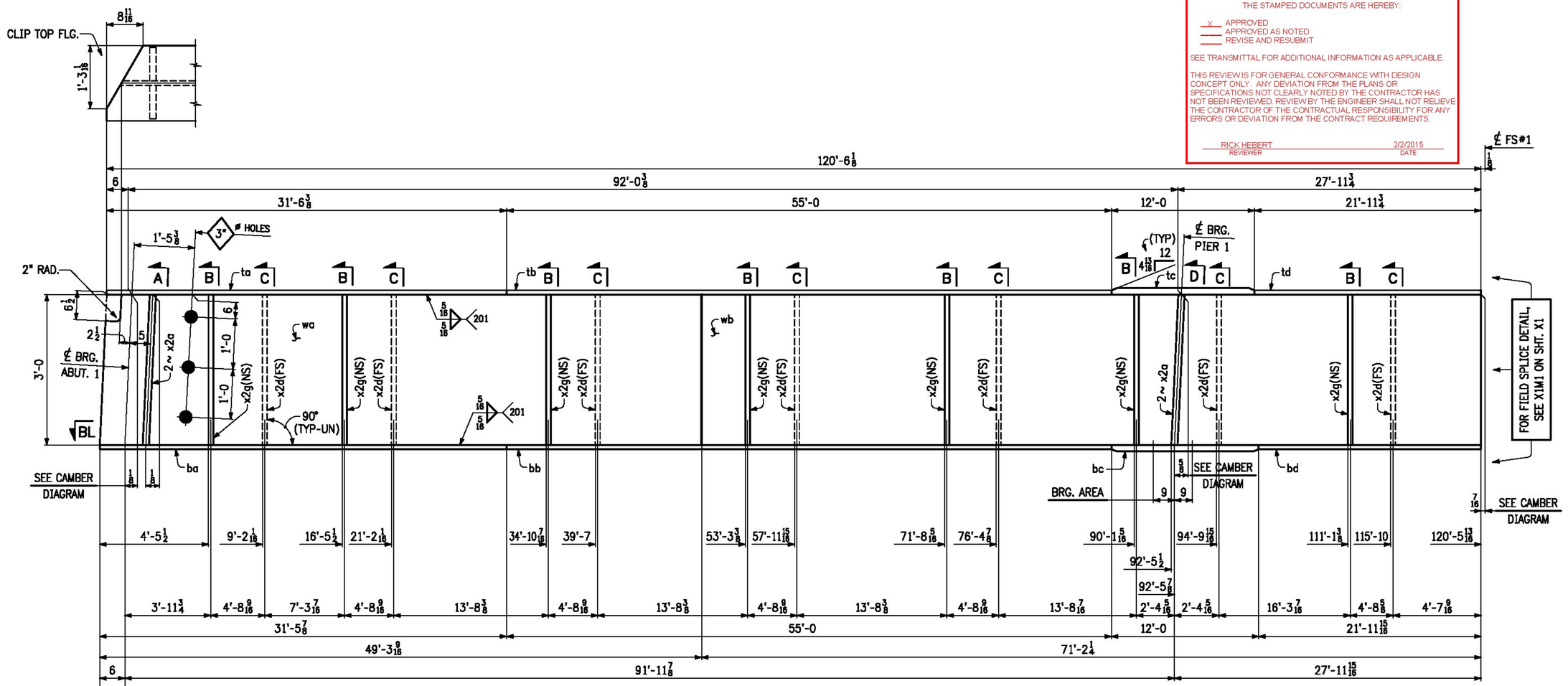

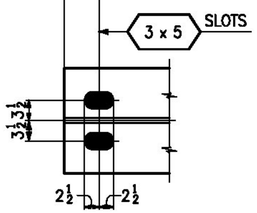

SECT. BL

ONE ~ GIRDER ~ 4G4A

- FOR GIRDER STANDARD DETAILS, SEE SHT. X2.
- FOR WEB CUTTING DIAGRAM, SEE SHT. C2.
- FOR FLANGE CUTTING DIAGRAMS, SEE SHT. C2.
- FOR GENERAL NOTES, SEE SHT. GN1.
- "BRG. AREA" INDICATES AREA THAT MUST BE FLAT TO PROVIDE A UNIFORM EVEN CONTACT WITH SOLE PLATE.

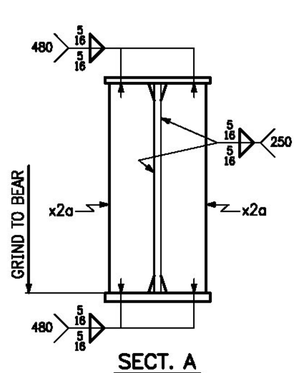

SECT. A

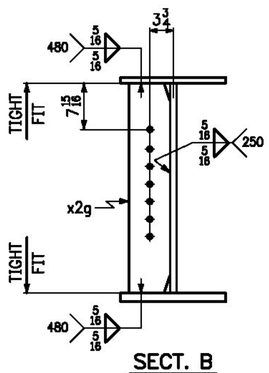

SECT. B

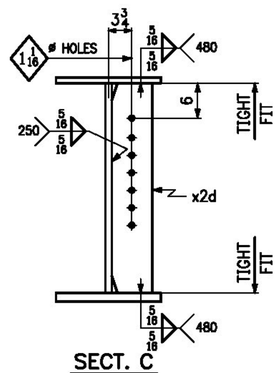

SECT. C

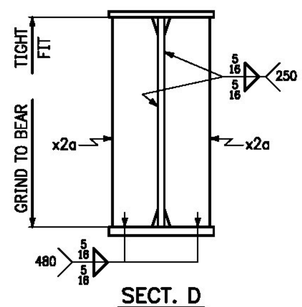

SECT. D

NO.	DATE	REMARKS	BY
		REVISIONS	

CASCO BAY STEEL STRUCTURES

CASCO BAY STEEL STRUCTURES
ONE WALLACE AVENUE — PHONE: 207-780-6722
SOUTH PORTLAND, ME 04106 — FAX: 207-780-6726

STRUCTURE	BENMONT AVE. (TH-7) (URBAN MINOR ARTERIAL)
LOCATION	TOWN OF BENNINGTON, VERMONT
PROJECT NO.	BRIDGE NO. 57 PROJECT NO. BRF 1000(16)
ENGINEER	STATE OF VERMONT AGENCY OF TRANSPORTATION
CUSTOMER	ALPINE CONSTRUCTION
ITEM	GIRDER ~ 4G4A
SURFACE PREP.	SSPC-SP10 — OPEN HOLES 15/16ø (UN)
PAINT	NONE

APPROVAL	DRAWN	GDC	12-9-14	SHEET NO. 4AB	JOB NO. 605
SHOP	CHECKED	PM	1-5-14		

1411-9 G4A-1411

Sheet 0440 - Plotted: 01/06/2015 @ 08:37 (HEATHER)

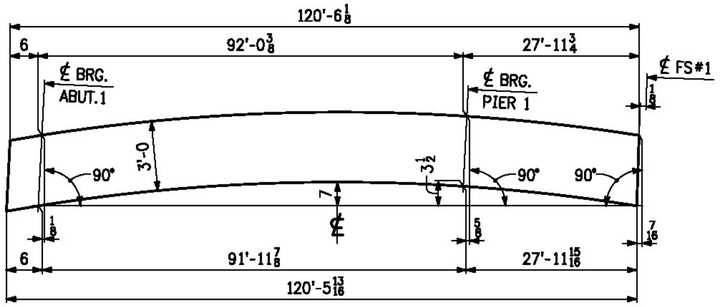

CAMBER DIAGRAM

LINE	NO. OF PCS.	SHIP MARK	ASS'Y MARK	MATERIAL SHAPE	SECTION	LENGTH FT.	LENGTH IN.	MATERIAL SPEC.	ITEM NO.	REMARKS
1	1	4G4A			GIRDER					23,224 lbs.
2	1		wa	PL	1/2 x 36	49	4 1/16	M270-50WT2	1/15	3022 lbs.
3	1		wb	PL	1/2 x 36	71	2 3/4	M270-50WT2	1/14	4363 lbs.
4	1		ta	PL	1 x 18	31	6 3/8	M270-50WT2	2/8	1931 lbs.
5	1		tb	PL	1 x 18	55	0	M270-50WT2	2/6	3369 lbs.
6	1		tc	PL	1 1/8 x 18	12	0	M270-50WT2	2/2	1011 lbs.
7	1		td	PL	1 x 18	21	11 3/4	M270-50WT2	2/9	1346 lbs.
8	1		ba	PL	1 x 18	31	5 7/8	M270-50WT2	2/7	1929 lbs.
9	1		bb	PL	1 x 18	55	0	M270-50WT2	2/6	3369 lbs.
10	1		bc	PL	1 1/4 x 18	12	0	M270-50WT2	2/4	919 lbs.
11	1		bd	PL	1 x 18	21	11 15/16	M270-50WT2	2/9	1347 lbs.
12										
13	4		x2a	PL	3/4 x 8 1/2	3	0	M270-50W	3/10	G1E 260 lbs.
14	7		x2d	PL	1/2 x 5	3	0	M270-50W	3/12	179 lbs.
15	7		x2g	PL	1/2 x 5	3	0	M270-50W	3/12	179 lbs.
16										
17										
18										
19										
20										
21										
22										
23										
24										
25										

T.Y. LIN INTERNATIONAL

THE STAMPED DOCUMENTS ARE HEREBY:

__X__ APPROVED
____ APPROVED AS NOTED
____ REVISE AND RESUBMIT

SEE TRANSMITTAL FOR ADDITIONAL INFORMATION AS APPLICABLE.

THIS REVIEW IS FOR GENERAL CONFORMANCE WITH DESIGN CONCEPT ONLY. ANY DEVIATION FROM THE PLANS OR SPECIFICATIONS NOT CLEARLY NOTED BY THE CONTRACTOR HAS NOT BEEN REVIEWED. REVIEW BY THE ENGINEER SHALL NOT RELIEVE THE CONTRACTOR OF THE CONTRACTUAL RESPONSIBILITY FOR ANY ERRORS OR DEVIATION FROM THE CONTRACT REQUIREMENTS.

RICK HEBERT — REVIEWER
2/2/2015 — DATE

NO.	DATE	REMARKS	BY

REVISIONS

CASCO BAY STEEL STRUCTURES
ONE WALLACE AVENUE
SOUTH PORTLAND, ME 04106
PHONE: 207-780-6722
FAX: 207-780-6726

STRUCTURE: BENMONT AVE. (TH-7) (URBAN MINOR ARTERIAL)
LOCATION: TOWN OF BENNINGTON, VERMONT
PROJECT NO.: BRIDGE NO. 57 PROJECT NO. BRF 1000(16)
ENGINEER: STATE OF VERMONT AGENCY OF TRANSPORTATION
CUSTOMER: ALPINE CONSTRUCTION
ITEM: GIRDER ~ 4G4A
SURFACE PREP.: SSPC-SP10 OPEN HOLES:
PAINT: NONE

APPROVAL	DRAWN	GDC	12-9-14	SHEET NO.	JOB NO.
SHOP	CHECKED	FM	1-5-15	4B	605

1411-9

G4A-1411B

Sheet 049 - Plotted: 01/30/2015 @ 08:37 (HEATHEN)

T.Y. LIN INTERNATIONAL

THE STAMPED DOCUMENTS ARE HEREBY:

_X_ APPROVED
___ APPROVED AS NOTED
___ REVISE AND RESUBMIT

SEE TRANSMITTAL FOR ADDITIONAL INFORMATION AS APPLICABLE.

THIS REVIEW IS FOR GENERAL CONFORMANCE WITH DESIGN CONCEPT ONLY. ANY DEVIATION FROM THE PLANS OR SPECIFICATIONS NOT CLEARLY NOTED BY THE CONTRACTOR HAS NOT BEEN REVIEWED. REVIEW BY THE ENGINEER SHALL NOT RELIEVE THE CONTRACTOR OF THE CONTRACTUAL RESPONSIBILITY FOR ANY ERRORS OR DEVIATION FROM THE CONTRACT REQUIREMENTS.

RICK HEBERT — REVIEWER — 2/2/2015 — DATE

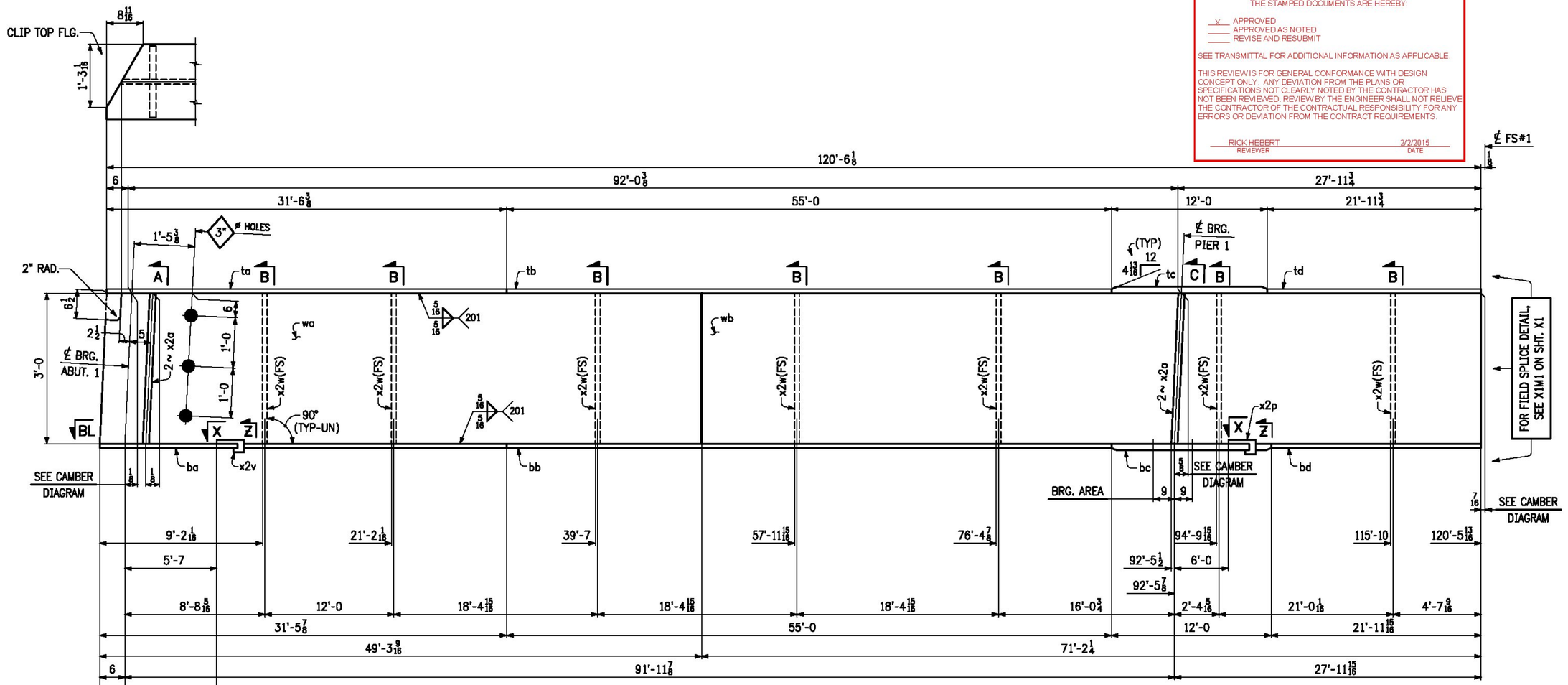

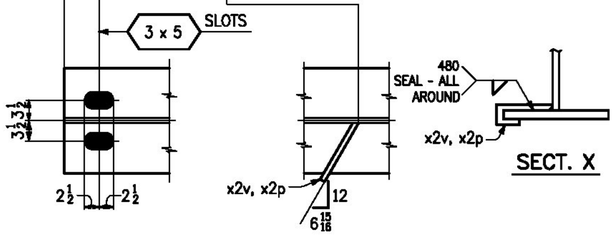

ONE ~ GIRDER ~ 5G5A

- FOR GIRDER STANDARD DETAILS, SEE SHT. X2.
- FOR WEB CUTTING DIAGRAM, SEE SHT. C2.
- FOR FLANGE CUTTING DIAGRAMS, SEE SHT. C2.
- FOR GENERAL NOTES, SEE SHT. GN1.
- "BRG. AREA" INDICATES AREA THAT MUST BE FLAT TO PROVIDE A UNIFORM EVEN CONTACT WITH SOLE PLATE.

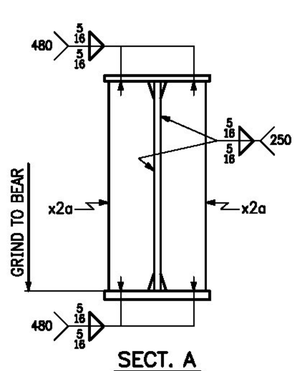

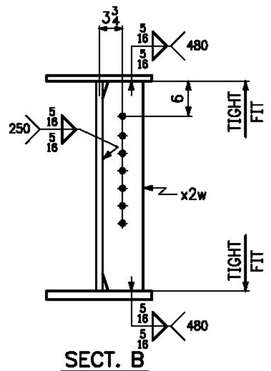

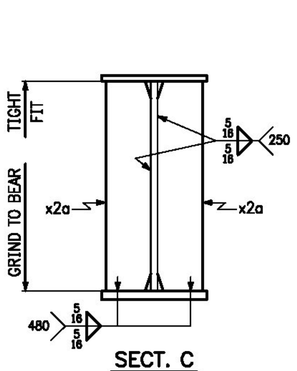

NO.	DATE	REMARKS	BY
		REVISIONS	

CASCO BAY STEEL STRUCTURES
ONE WALLACE AVENUE — PHONE: 207-780-6722
SOUTH PORTLAND, ME 04106 — FAX: 207-780-6726

STRUCTURE	BENMONT AVE. (TH-7) (URBAN MINOR ARTERIAL)
LOCATION	TOWN OF BENNINGTON, VERMONT
PROJECT NO.	BRIDGE NO. 57 PROJECT NO. BRF 1000(16)
ENGINEER	STATE OF VERMONT AGENCY OF TRANSPORTATION
CUSTOMER	ALPINE CONSTRUCTION
ITEM	GIRDER ~ 5G5A
SURFACE PREP.	SSPC-SP10 — OPEN HOLES 15/16ø (UN)
PAINT	NONE

APPROVAL	DRAWN	GDC	12-9-14	SHEET NO. 5AB	JOB NO. 605
SHOP	CHECKED	FM	1-5-15		

1411-9 — G5A-1411

Sheet 0349 - Plotted: 01/06/2015 @ 08:37 (HEATHER)

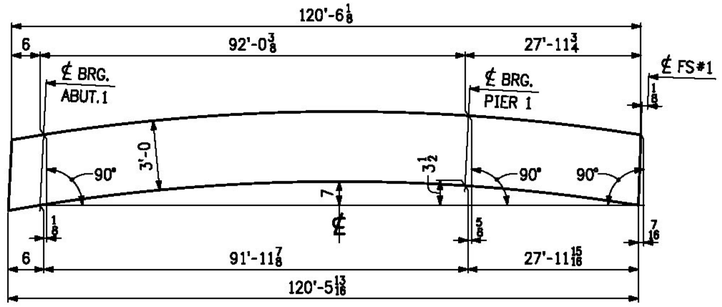

CAMBER DIAGRAM

LINE	NO. OF PCS.	SHIP MARK	ASS'Y MARK	MATERIAL SHAPE	SECTION	LENGTH FT.	LENGTH IN.	MATERIAL SPEC.	ITEM NO.	REMARKS
1	1	5G5A			GIRDER					23,051 lbs.
2	1		wa	PL	1/2 x 36	49	4 1/16	M270-50WT2	1/15	3022 lbs.
3	1		wb	PL	1/2 x 36	71	2 3/4	M270-50WT2	1/14	4363 lbs.
4	1		ta	PL	1 x 18	31	6 3/8	M270-50WT2	2/8	1931 lbs.
5	1		tb	PL	1 x 18	55	0	M270-50WT2	2/6	3369 lbs.
6	1		tc	PL	1 3/8 x 18	12	0	M270-50WT2	2/2	1011 lbs.
7	1		td	PL	1 x 18	21	11 3/4	M270-50WT2	2/9	1346 lbs.
8	1		ba	PL	1 x 18	31	5 7/8	M270-50WT2	2/7	1929 lbs.
9	1		bb	PL	1 x 18	55	0	M270-50WT2	2/6	3369 lbs.
10	1		bc	PL	1 1/4 x 18	12	0	M270-50WT2	2/4	919 lbs.
11	1		bd	PL	1 x 18	21	11 15/16	M270-50WT2	2/9	1347 lbs.
12										
13	4		x2a	PL	3/4 x 8 1/2	3	0	M270-50W	3/10	G1E 260 lbs.
14	7		x2w	PL	1/2 x 5	3	0	M270-50W	3/12	179 lbs.
15	1		x2p	PL	1/4 x 3 1/4	1	0 1/8	M270-50W	7/2	3 lbs.
16	1		x2v	PL	1/4 x 3	1	0 1/8	M270-50W	7/2	3 lbs.
17										
18										
19										
20										
21										
22										
23										
24										
25										

T.Y. LIN INTERNATIONAL

THE STAMPED DOCUMENTS ARE HEREBY:

__X__ APPROVED
____ APPROVED AS NOTED
____ REVISE AND RESUBMIT

SEE TRANSMITTAL FOR ADDITIONAL INFORMATION AS APPLICABLE.

THIS REVIEW IS FOR GENERAL CONFORMANCE WITH DESIGN CONCEPT ONLY. ANY DEVIATION FROM THE PLANS OR SPECIFICATIONS NOT CLEARLY NOTED BY THE CONTRACTOR HAS NOT BEEN REVIEWED. REVIEW BY THE ENGINEER SHALL NOT RELIEVE THE CONTRACTOR OF THE CONTRACTUAL RESPONSIBILITY FOR ANY ERRORS OR DEVIATION FROM THE CONTRACT REQUIREMENTS.

RICK HEBERT — REVIEWER
2/2/2015 — DATE

NO.	DATE	REMARKS	BY

REVISIONS

CASCO BAY STEEL STRUCTURES
ONE WALLACE AVENUE
SOUTH PORTLAND, ME 04106
PHONE: 207-780-6722
FAX: 207-780-6726

STRUCTURE: BENMONT AVE. (TH-7) (URBAN MINOR ARTERIAL)
LOCATION: TOWN OF BENNINGTON, VERMONT
PROJECT NO.: BRIDGE NO. 57 PROJECT NO. BRF 1000(16)
ENGINEER: STATE OF VERMONT AGENCY OF TRANSPORTATION
CUSTOMER: ALPINE CONSTRUCTION
ITEM: GIRDER ~ 5G5A
SURFACE PREP.: SSPC-SP10 OPEN HOLES:
PAINT: NONE

APPROVAL	DRAWN	GDC	12-9-14	SHEET NO.	JOB NO.
SHOP	CHECKED	PM	1-5-15	5B	605

1411-9 G5A-1411B

Sheet DGN - Plotted: 01/30/2015 @ 08:37 (HEATHEN)

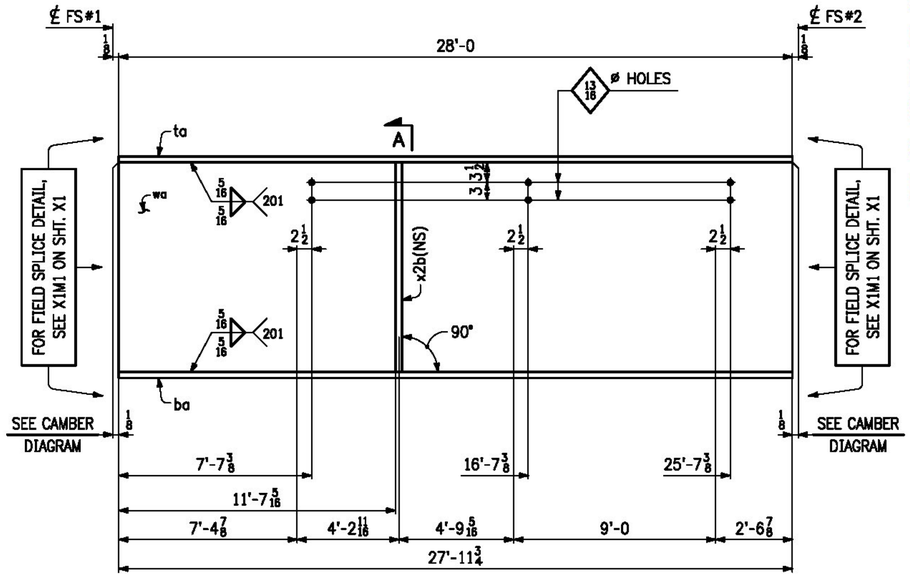

Spacing of waterline support beams are not all at 9'-0" spaces as shown on Contract Drawing Sheet 39 of 75. Maximum variation appears to be 9". The increase in span is acceptable, however the Contractor should refer to the Special Provision (Water Main on Bridge) to ensure compliance with the hanger distance to pipe joint requirements are also met.

LINE	NO. OF PCS.	SHIP MARK	ASS'Y MARK	MATERIAL SHAPE	SECTION	LENGTH FT.	LENGTH IN.	MATERIAL SPEC.	ITEM NO.	REMARKS
1	1	6G1B			GIRDER					5180 lbs.
2	1		wa	PL	1/2 x 36	28	0	M270-50WT2	1/19	1715 lbs.
3	1		ta	PL	1 x 18	28	0	M270-50WT2	2/11	1715 lbs.
4	1		ba	PL	1 x 18	27	11 3/4	M270-50WT2	2/11	1714 lbs.
5										
6	1		x2b	PL	1/2 x 7	3	0	M270-50W	3/11	36 lbs.
7										
8										
9										
10										
11										
12										
13										
14										
15										
16										
17										
18										
19										
20										
21										
22										
23										
24										
25										

ONE ~ GIRDER ~ 6G1B

- FOR GIRDER STANDARD DETAILS, SEE SHT. X2.
- FOR WEB CUTTING DIAGRAM, SEE SHT. C3.
- FOR FLANGE CUTTING DIAGRAMS, SEE SHT. C3.
- FOR GENERAL NOTES, SEE SHT. GN1.

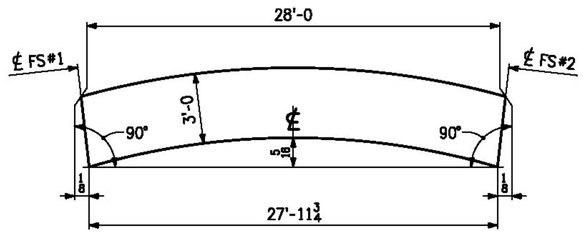

CAMBER DIAGRAM

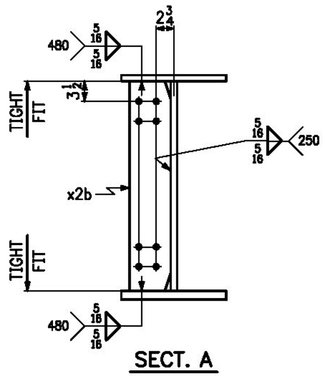

SECT. A

T.Y. LIN INTERNATIONAL

THE STAMPED DOCUMENTS ARE HEREBY:

____ APPROVED
__X__ APPROVED AS NOTED
____ REVISE AND RESUBMIT

SEE TRANSMITTAL FOR ADDITIONAL INFORMATION AS APPLICABLE.

THIS REVIEW IS FOR GENERAL CONFORMANCE WITH DESIGN CONCEPT ONLY. ANY DEVIATION FROM THE PLANS OR SPECIFICATIONS NOT CLEARLY NOTED BY THE CONTRACTOR HAS NOT BEEN REVIEWED. REVIEW BY THE ENGINEER SHALL NOT RELIEVE THE CONTRACTOR OF THE CONTRACTUAL RESPONSIBILITY FOR ANY ERRORS OR DEVIATION FROM THE CONTRACT REQUIREMENTS.

RICK HEBERT — REVIEWER
2/2/2015 — DATE

NO.	DATE	REMARKS	BY

REVISIONS

CASCO BAY STEEL STRUCTURES
ONE WALLACE AVENUE
SOUTH PORTLAND, ME 04106
PHONE: 207-780-6722
FAX: 207-780-6726

STRUCTURE: BENMONT AVE. (TH-7) (URBAN MINOR ARTERIAL)
LOCATION: TOWN OF BENNINGTON, VERMONT
PROJECT NO.: BRIDGE NO. 57 PROJECT NO. BRF 1000(16)
ENGINEER: STATE OF VERMONT AGENCY OF TRANSPORTATION
CUSTOMER: ALPINE CONSTRUCTION
ITEM: GIRDER ~ 6G1B
SURFACE PREP.: SSPC-SP10 OPEN HOLES: 15/16ø (UN)
PAINT: NONE

APPROVAL	DRAWN	GDC	12-10-14	SHEET NO.	JOB NO.
SHOP	CHECKED	FM	1-5-15	6	605

1411-9 G1B-1411

Sheet 06 - Plotted: 01/09/2015 @ 08:37 (HEATHER)

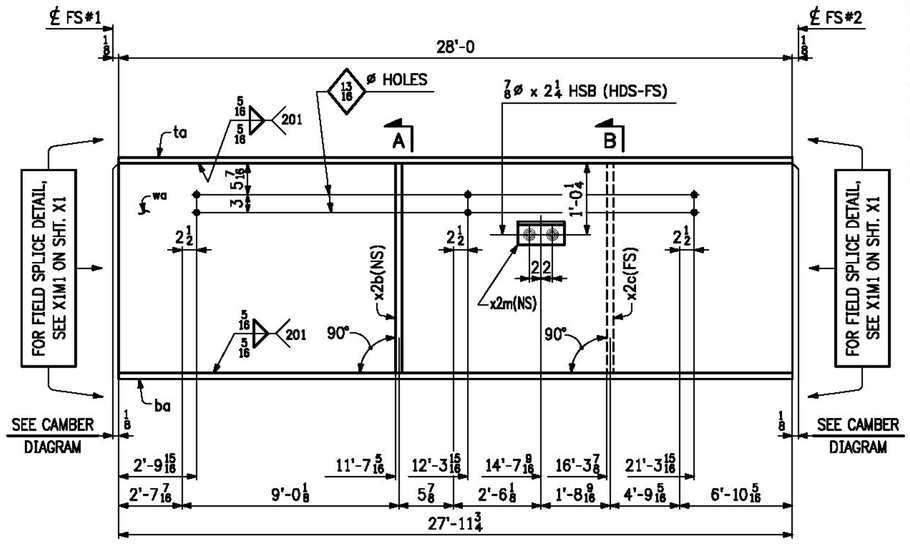

Spacing of waterline support beams are not all at 9'-0" spaces as shown on Contract Drawing Sheet 39 of 75. Maximum variation appears to be 9". The increase in span is acceptable, however the Contractor should refer to the Special Provision (Water Main on Bridge) to ensure compliance with the hanger distance to pipe joint requirements are also met.

LINE	NO. OF PCS.	SHIP MARK	ASS'Y MARK	MATERIAL SHAPE	SECTION	LENGTH FT.	LENGTH IN.	MATERIAL SPEC.	ITEM NO.	REMARKS
1	1	7G2B			GIRDER					5223 lbs.
2	1		wa	PL	1/2 x 36	28	0	M270-50WT2	1/19	1715 lbs.
3	1		ta	PL	1 x 18	28	0	M270-50WT2	2/11	1715 lbs.
4	1		ba	PL	1 x 18	27	11 3/4	M270-50WT2	2/11	1714 lbs.
5										
6	1		x2b	PL	1/2 x 7	3	0	M270-50W	3/11	36 lbs.
7	1		x2c	PL	1/2 x 7	3	0	M270-50W	3/11	36 lbs.
8	1		x2m	L	4 x 4 x 3/8	0	8	M270-50W	3/13	7 lbs.
9										
10	2				7/8ø HSB	0	2 1/4	M164 TYPE 3	6/2	
11	2				7/8ø WASHER			M293-3	6/6	
12										
13										
14										
15										
16										
17										
18										
19										
20										
21										
22										
23										
24										
25										

ONE ~ GIRDER ~ 7G2B

- FOR GIRDER STANDARD DETAILS, SEE SHT. X2.
- FOR WEB CUTTING DIAGRAM, SEE SHT. C3.
- FOR FLANGE CUTTING DIAGRAMS, SEE SHT. C3.
- FOR GENERAL NOTES, SEE SHT. GN1.

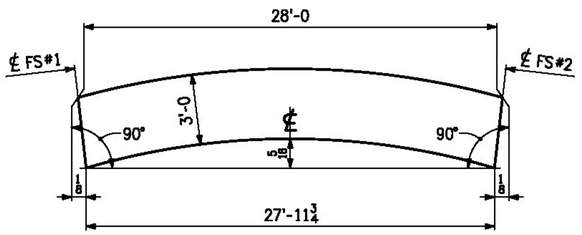

CAMBER DIAGRAM

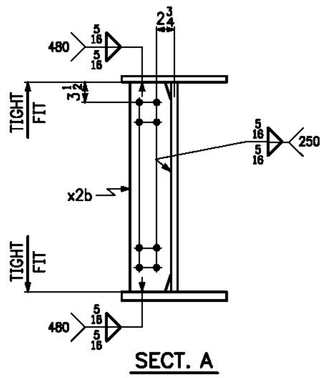

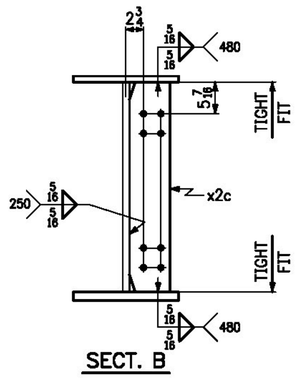

T.Y. LIN INTERNATIONAL

THE STAMPED DOCUMENTS ARE HEREBY:

____ APPROVED
_X_ APPROVED AS NOTED
____ REVISE AND RESUBMIT

SEE TRANSMITTAL FOR ADDITIONAL INFORMATION AS APPLICABLE.

THIS REVIEW IS FOR GENERAL CONFORMANCE WITH DESIGN CONCEPT ONLY. ANY DEVIATION FROM THE PLANS OR SPECIFICATIONS NOT CLEARLY NOTED BY THE CONTRACTOR HAS NOT BEEN REVIEWED. REVIEW BY THE ENGINEER SHALL NOT RELIEVE THE CONTRACTOR OF THE CONTRACTUAL RESPONSIBILITY FOR ANY ERRORS OR DEVIATION FROM THE CONTRACT REQUIREMENTS.

RICK HEBERT — REVIEWER
2/2/2015 — DATE

NO.	DATE	REMARKS	BY

REVISIONS

CASCO BAY STEEL STRUCTURES
ONE WALLACE AVENUE
SOUTH PORTLAND, ME 04106
PHONE: 207-780-6722
FAX: 207-780-6726

STRUCTURE	BENMONT AVE. (TH-7) (URBAN MINOR ARTERIAL)
LOCATION	TOWN OF BENNINGTON, VERMONT
PROJECT NO.	BRIDGE NO. 57 PROJECT NO. BRF 1000(16)
ENGINEER	STATE OF VERMONT AGENCY OF TRANSPORTATION
CUSTOMER	ALPINE CONSTRUCTION
ITEM	GIRDER ~ 7G2B
SURFACE PREP.	SSPC-SP10 OPEN HOLES 15/16ø (UN)
PAINT	NONE

APPROVAL	DRAWN	GDC	12-10-14	SHEET NO. 7	JOB NO. 605
SHOP	CHECKED	PM	1-5-15		

1411-9 G2B-1411

Sheet 07 - Plotted: 01/06/2015 @ 08:38 (HEATHER)

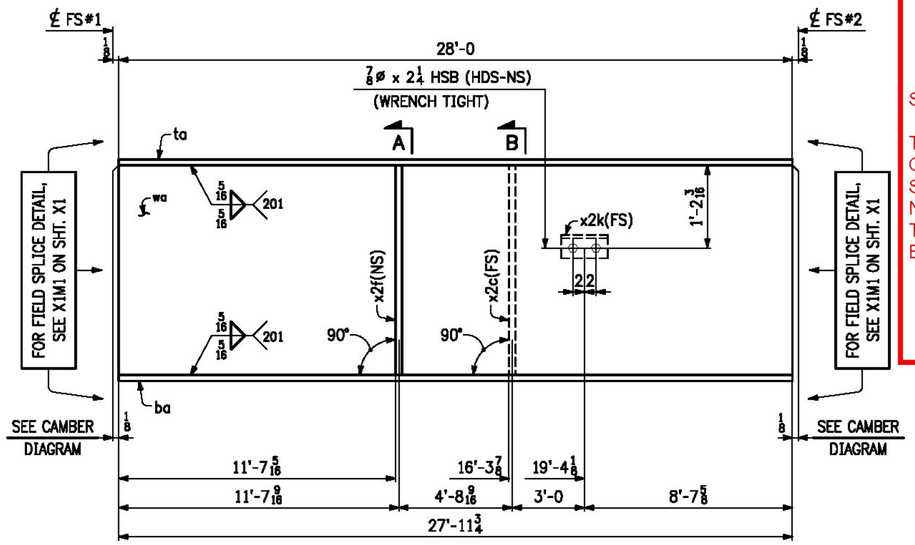

T.Y. LIN INTERNATIONAL

THE STAMPED DOCUMENTS ARE HEREBY:

__X__ APPROVED
_____ APPROVED AS NOTED
_____ REVISE AND RESUBMIT

SEE TRANSMITTAL FOR ADDITIONAL INFORMATION AS APPLICABLE.

THIS REVIEW IS FOR GENERAL CONFORMANCE WITH DESIGN CONCEPT ONLY. ANY DEVIATION FROM THE PLANS OR SPECIFICATIONS NOT CLEARLY NOTED BY THE CONTRACTOR HAS NOT BEEN REVIEWED. REVIEW BY THE ENGINEER SHALL NOT RELIEVE THE CONTRACTOR OF THE CONTRACTUAL RESPONSIBILITY FOR ANY ERRORS OR DEVIATION FROM THE CONTRACT REQUIREMENTS.

RICK HEBERT — REVIEWER
2/2/2015 — DATE

LINE	NO. OF PCS.	SHIP MARK	ASS'Y MARK	MATERIAL SHAPE	SECTION	LENGTH FT.	LENGTH IN.	MATERIAL SPEC.	ITEM NO.	REMARKS
1	1	8G3B			GIRDER					5213 lbs.
2	1		wa	PL	1/2 x 36	28	0	M270-50WT2	1/19	1715 lbs.
3	1		ta	PL	1 x 18	28	0	M270-50WT2	2/11	1715 lbs.
4	1		ba	PL	1 x 18	27	11 3/4	M270-50WT2	2/11	1714 lbs.
5										
6	1		x2c	PL	1/2 x 7	3	0	M270-50W	3/11	36 lbs.
7	1		x2f	PL	1/2 x 5	3	0	M270-50W	3/12	26 lbs.
8	1		x2k	L	4 x 4 x 3/8	0	8	M270-50W	3/13	7 lbs.
9										
10	2				7/8ø HSB	0	2 1/4	M164 TYPE 3	6/2	
11	2				7/8ø WASHER			M293-3	6/6	
12										
13										
14										
15										
16										
17										
18										
19										
20										
21										
22										
23										
24										
25										

ONE ~ GIRDER ~ 8G3B

- FOR GIRDER STANDARD DETAILS, SEE SHT. X2.
- FOR WEB CUTTING DIAGRAM, SEE SHT. C3.
- FOR FLANGE CUTTING DIAGRAMS, SEE SHT. C3.
- FOR GENERAL NOTES, SEE SHT. GN1.

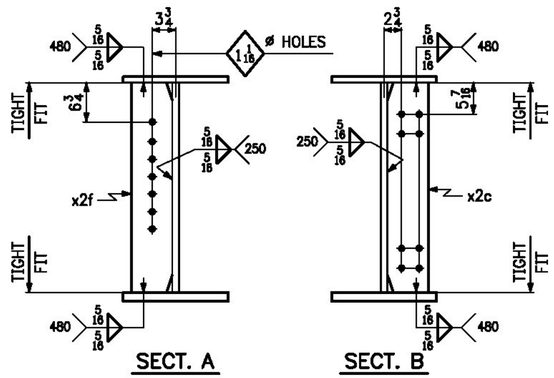

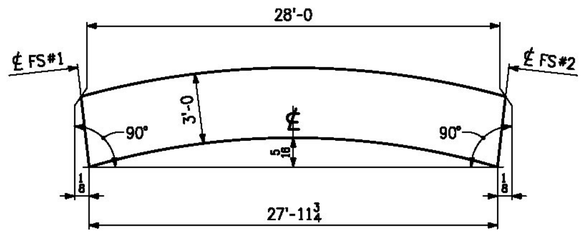

CAMBER DIAGRAM

NO.	DATE	REMARKS	BY

REVISIONS

CASCO BAY STEEL STRUCTURES
ONE WALLACE AVENUE
SOUTH PORTLAND, ME 04106
PHONE: 207-780-6722
FAX: 207-780-6726

STRUCTURE	BENMONT AVE. (TH-7) (URBAN MINOR ARTERIAL)
LOCATION	TOWN OF BENNINGTON, VERMONT
PROJECT NO.	BRIDGE NO. 57 PROJECT NO. BRF 1000(16)
ENGINEER	STATE OF VERMONT AGENCY OF TRANSPORTATION
CUSTOMER	ALPINE CONSTRUCTION
ITEM	GIRDER ~ 8G3B
SURFACE PREP.	SSPC-SP10
OPEN HOLES	15/16ø (UN)
PAINT	NONE

APPROVAL	DRAWN	GDC	12-10-14	SHEET NO. 8	JOB NO. 605
SHOP	CHECKED	PM	1-5-15		

1411-9 G3B-1411

Sheet 08 - Plotted: 01/08/2015 @ 08:38 (HEATHER)

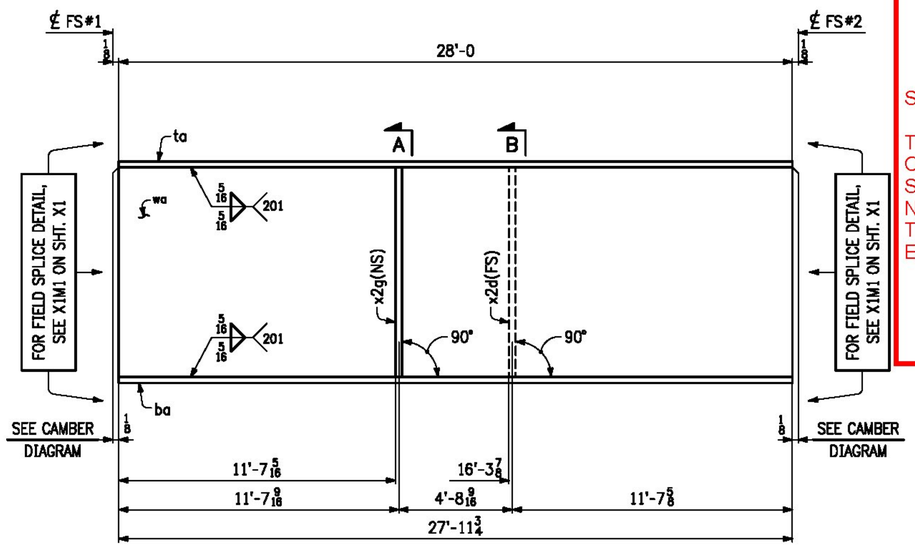

T.Y. LIN INTERNATIONAL

THE STAMPED DOCUMENTS ARE HEREBY:

__X__ APPROVED
_____ APPROVED AS NOTED
_____ REVISE AND RESUBMIT

SEE TRANSMITTAL FOR ADDITIONAL INFORMATION AS APPLICABLE.

THIS REVIEW IS FOR GENERAL CONFORMANCE WITH DESIGN CONCEPT ONLY. ANY DEVIATION FROM THE PLANS OR SPECIFICATIONS NOT CLEARLY NOTED BY THE CONTRACTOR HAS NOT BEEN REVIEWED. REVIEW BY THE ENGINEER SHALL NOT RELIEVE THE CONTRACTOR OF THE CONTRACTUAL RESPONSIBILITY FOR ANY ERRORS OR DEVIATION FROM THE CONTRACT REQUIREMENTS.

RICK HEBERT — REVIEWER
2/2/2015 — DATE

LINE	NO. OF PCS.	SHIP MARK	ASS'Y MARK	MATERIAL SHAPE	MATERIAL SECTION	LENGTH FT.	LENGTH IN.	MATERIAL SPEC.	ITEM NO.	REMARKS
1	1	9G4B			GIRDER					5196 lbs.
2	1		wa	PL	1/2 x 36	28	0	M270-50WT2	1/10	1715 lbs.
3	1		ta	PL	1 x 18	28	0	M270-50WT2	2/11	1715 lbs.
4	1		ba	PL	1 x 18	27	11 3/4	M270-50WT2	2/11	1714 lbs.
5										
6	1		x2d	PL	1/2 x 5	3	0	M270-50W	3/12	26 lbs.
7	1		x2g	PL	1/2 x 5	3	0	M270-50W	3/12	26 lbs.
8										
9										
10										
11										
12										
13										
14										
15										
16										
17										
18										
19										
20										
21										
22										
23										
24										
25										

ONE ~ GIRDER ~ 9G4B

- FOR GIRDER STANDARD DETAILS, SEE SHT. X2.
- FOR WEB CUTTING DIAGRAM, SEE SHT. C3.
- FOR FLANGE CUTTING DIAGRAMS, SEE SHT. C3.
- FOR GENERAL NOTES, SEE SHT. GN1.

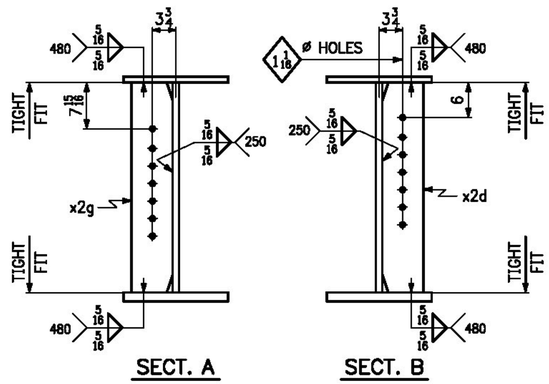

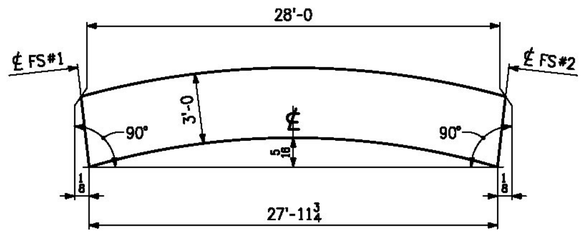

CAMBER DIAGRAM

NO.	DATE	REMARKS	BY
		REVISIONS	

CASCO BAY STEEL STRUCTURES
ONE WALLACE AVENUE
SOUTH PORTLAND, ME 04106
PHONE: 207-780-6722
FAX: 207-780-6726

STRUCTURE	BENMONT AVE. (TH-7) (URBAN MINOR ARTERIAL)
LOCATION	TOWN OF BENNINGTON, VERMONT
PROJECT NO.	BRIDGE NO. 57 PROJECT NO. BRF 1000(16)
ENGINEER	STATE OF VERMONT AGENCY OF TRANSPORTATION
CUSTOMER	ALPINE CONSTRUCTION
ITEM	GIRDER ~ 9G4B
SURFACE PREP.	SSPC-SP10
OPEN HOLES	15/16ø
PAINT	NONE

APPROVAL	DRAWN	GDC	12-10-14	SHEET NO. 9	JOB NO. 605
SHOP	CHECKED	PM	1-5-15		

1411-9 G4B-1411

Sheet 09 - Plotted: 01/09/2015 @ 08:38 (HEATHER)

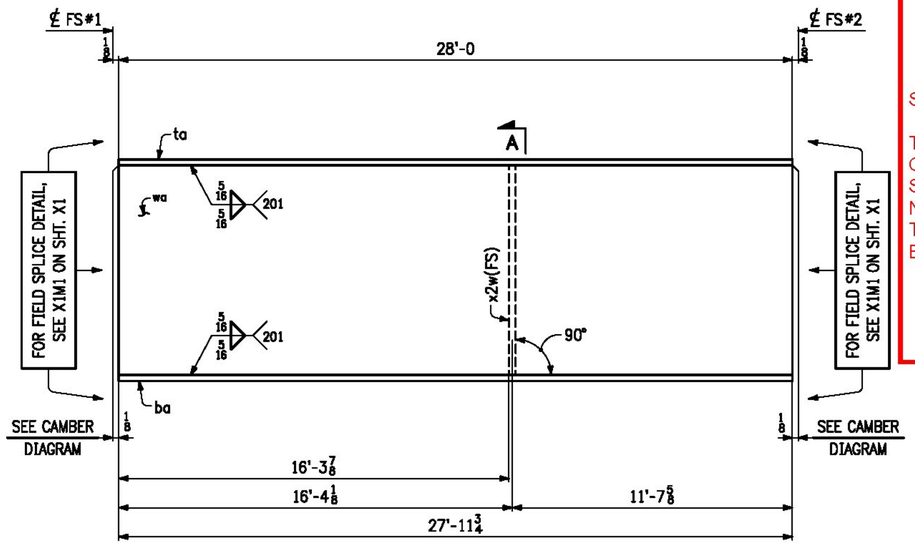

T.Y. LIN INTERNATIONAL

THE STAMPED DOCUMENTS ARE HEREBY:

__X__ APPROVED
_____ APPROVED AS NOTED
_____ REVISE AND RESUBMIT

SEE TRANSMITTAL FOR ADDITIONAL INFORMATION AS APPLICABLE.

THIS REVIEW IS FOR GENERAL CONFORMANCE WITH DESIGN CONCEPT ONLY. ANY DEVIATION FROM THE PLANS OR SPECIFICATIONS NOT CLEARLY NOTED BY THE CONTRACTOR HAS NOT BEEN REVIEWED. REVIEW BY THE ENGINEER SHALL NOT RELIEVE THE CONTRACTOR OF THE CONTRACTUAL RESPONSIBILITY FOR ANY ERRORS OR DEVIATION FROM THE CONTRACT REQUIREMENTS.

RICK HEBERT — REVIEWER
2/2/2015 — DATE

LINE	NO. OF PCS.	SHIP MARK	ASS'Y MARK	MATERIAL						REMARKS
				SHAPE	SECTION	LENGTH FT.	LENGTH IN.	MATERIAL SPEC.	ITEM NO.	
1	1	10G5B			GIRDER					5170 lbs.
2	1		wa	PL	1/2 x 36	28	0	M270-50WT2	1/19	1715 lbs.
3	1		ta	PL	1 x 18	28	0	M270-50WT2	2/11	1715 lbs.
4	1		ba	PL	1 x 18	27	11 3/4	M270-50WT2	2/11	1714 lbs.
5										
6	1		x2w	PL	1/2 x 5	3	0	M270-50W	3/12	26 lbs.
7										
8										
9										
10										
11										
12										
13										
14										
15										
16										
17										
18										
19										
20										
21										
22										
23										
24										
25										

ONE ~ GIRDER ~ 10G5B

- FOR GIRDER STANDARD DETAILS, SEE SHT. X2.
- FOR WEB CUTTING DIAGRAM, SEE SHT. C3.
- FOR FLANGE CUTTING DIAGRAMS, SEE SHT. C3.
- FOR GENERAL NOTES, SEE SHT. GN1.

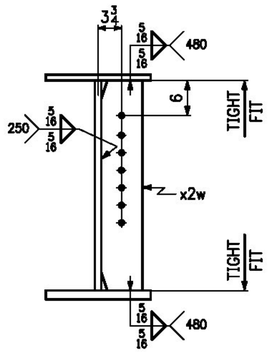

SECT. A

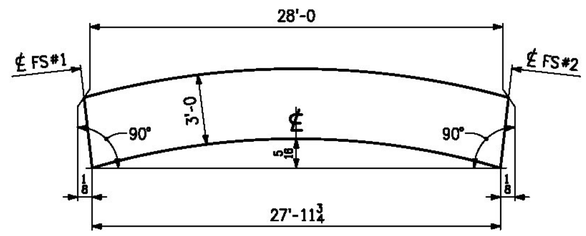

CAMBER DIAGRAM

NO.	DATE	REMARKS	BY

REVISIONS

CASCO BAY STEEL STRUCTURES
ONE WALLACE AVENUE
SOUTH PORTLAND, ME 04106
PHONE: 207-780-6722
FAX: 207-780-6726

STRUCTURE	BENMONT AVE. (TH-7) (URBAN MINOR ARTERIAL)
LOCATION	TOWN OF BENNINGTON, VERMONT
PROJECT NO.	BRIDGE NO. 57 PROJECT NO. BRF 1000(16)
ENGINEER	STATE OF VERMONT AGENCY OF TRANSPORTATION
CUSTOMER	ALPINE CONSTRUCTION
ITEM	GIRDER ~ 10G5B
SURFACE PREP.	SSPC-SP10 — OPEN HOLES 15/16ø
PAINT	NONE

APPROVAL	DRAWN	GDC	12-10-14	SHEET NO. 10	JOB NO. 605
SHOP	CHECKED	FM	1-5-15		

1411-9 G5B-1411

Sheet 10 - Plotted: 01/09/2015 @ 08:38 (HEATHER)

Spacing of waterline support beams are not all at 9'-0" spaces as shown on Contract Drawing Sheet 39 of 75. Maximum variation appears to be 9". The increase in span is acceptable, however the Contractor should refer to the Special Provision (Water Main on Bridge) to ensure compliance with the hanger distance to pipe joint requirements are also met.

T.Y. LIN INTERNATIONAL

THE STAMPED DOCUMENTS ARE HEREBY:

___ APPROVED
_X_ APPROVED AS NOTED
___ REVISE AND RESUBMIT

SEE TRANSMITTAL FOR ADDITIONAL INFORMATION AS APPLICABLE.

THIS REVIEW IS FOR GENERAL CONFORMANCE WITH DESIGN CONCEPT ONLY. ANY DEVIATION FROM THE PLANS OR SPECIFICATIONS NOT CLEARLY NOTED BY THE CONTRACTOR HAS NOT BEEN REVIEWED. REVIEW BY THE ENGINEER SHALL NOT RELIEVE THE CONTRACTOR OF THE CONTRACTUAL RESPONSIBILITY FOR ANY ERRORS OR DEVIATION FROM THE CONTRACT REQUIREMENTS.

RICK HEBERT (REVIEWER) 2/2/2015 (DATE)

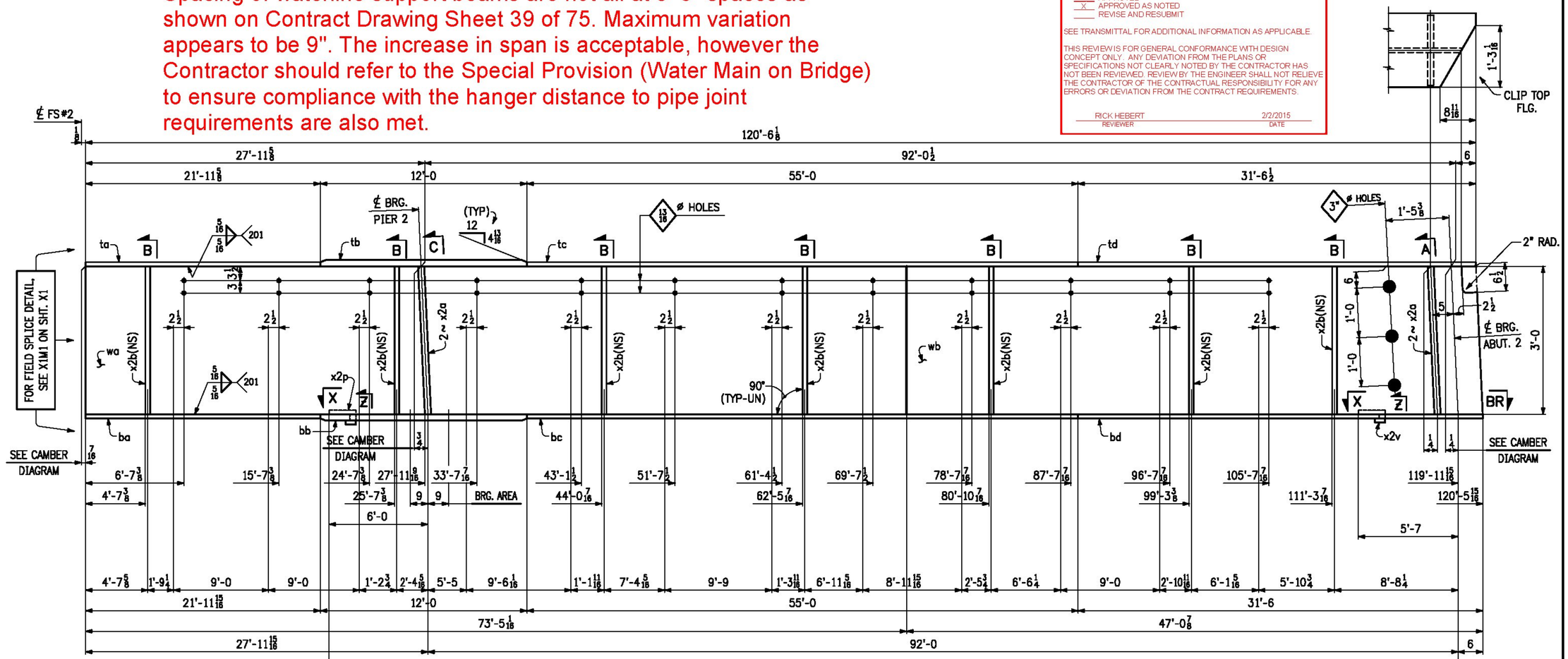

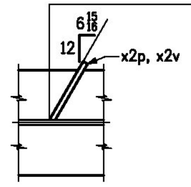

SECT. X

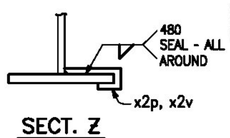

SECT. Z

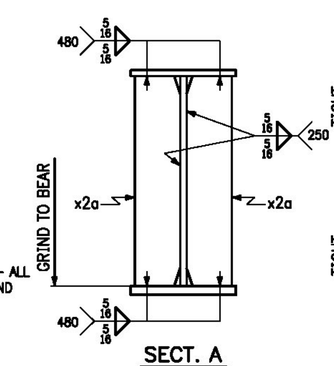

SECT. A

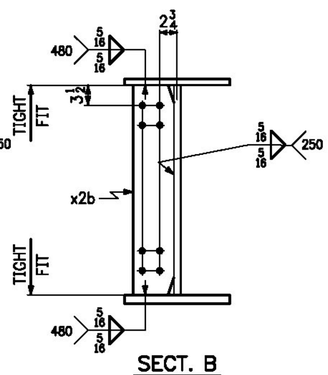

SECT. B

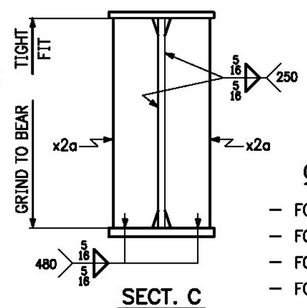

SECT. C

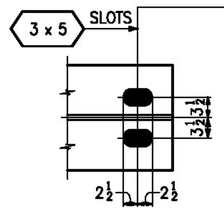

SECT. BR

ONE ~ GIRDER ~ 11G1C

- FOR GIRDER STANDARD DETAILS, SEE SHT. X2.
- FOR WEB CUTTING DIAGRAM, SEE SHT. C4.
- FOR FLANGE CUTTING DIAGRAMS, SEE SHT. C4.
- FOR GENERAL NOTES, SEE SHT. GN1.
- "BRG. AREA" INDICATES AREA THAT MUST BE FLAT TO PROVIDE A UNIFORM EVEN CONTACT WITH SOLE PLATE.

NO.	DATE	REMARKS	BY
		REVISIONS	

CASCO BAY STEEL STRUCTURES
ONE WALLACE AVENUE
SOUTH PORTLAND, ME 04106
PHONE: 207-780-6722
FAX: 207-780-6726

STRUCTURE	BENMONT AVE. (TH-7) (URBAN MINOR ARTERIAL)
LOCATION	TOWN OF BENNINGTON, VERMONT
PROJECT NO.	BRIDGE NO. 57 PROJECT NO. BRF 1000(16)
ENGINEER	STATE OF VERMONT AGENCY OF TRANSPORTATION
CUSTOMER	ALPINE CONSTRUCTION
ITEM	GIRDER ~ 11G1C
SURFACE PREP.	SSPC-SP10
OPEN HOLES	15/16ø (UN)
PAINT	NONE

APPROVAL	DRAWN	GDC	12-9-14	SHEET NO. 11AB	JOB NO. 605
SHOP	CHECKED	PM	1-5-15		

1411-9 G11C-1411

Sheet 11AB - Plotted: 01/08/2015 @ 08:38 (HEATHER)

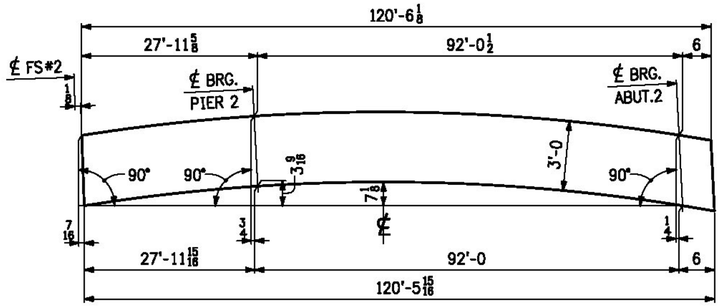

CAMBER DIAGRAM

LINE	NO. OF PCS.	SHIP MARK	ASS'Y MARK	MATERIAL SHAPE	SECTION	LENGTH FT.	LENGTH IN.	MATERIAL SPEC.	ITEM NO.	REMARKS
1	1	11G1C			GIRDER					23,124 lbs.
2	1		wa	PL	1/2 x 36	73	5 5/8	M270-50WT2	1/23	4500 lbs.
3	1		wb	PL	1/2 x 36	47	1 1/8	M270-50WT2	1/26	2886 lbs.
4	1		ta	PL	1 x 18	21	11 5/8	M270-50WT2	2/20	1346 lbs.
5	1		tb	PL	1 3/8 x 18	12	0	M270-50WT2	2/13	1011 lbs.
6	1		tc	PL	1 x 18	55	0	M270-50WT2	2/17	3369 lbs.
7	1		td	PL	1 x 18	31	6 1/2	M270-50WT2	2/18	1932 lbs.
8	1		ba	PL	1 x 18	21	11 15/16	M270-50WT2	2/20	1347 lbs.
9	1		bb	PL	1 1/4 x 18	12	0	M270-50WT2	2/15	919 lbs.
10	1		bc	PL	1 x 18	55	0	M270-50WT2	2/17	3369 lbs.
11	1		bd	PL	1 x 18	31	6	M270-50WT2	2/18	1929 lbs.
12										
13	4		x2a	PL	3/4 x 8 1/2	3	0	M270-50W	3/10	G1E 260 lbs.
14	7		x2b	PL	1/2 x 7	3	0	M270-50W	3/11	250 lbs.
15	1		x2p	PL	1/4 x 3 1/4	1	0 1/8	M270-50W	7/2	3 lbs.
16	1		x2v	PL	1/4 x 3	1	0 1/8	M270-50W	7/2	3 lbs.
17										
18										
19										
20										
21										
22										
23										
24										
25										

T.Y. LIN INTERNATIONAL

THE STAMPED DOCUMENTS ARE HEREBY:

__X__ APPROVED
____ APPROVED AS NOTED
____ REVISE AND RESUBMIT

SEE TRANSMITTAL FOR ADDITIONAL INFORMATION AS APPLICABLE.

THIS REVIEW IS FOR GENERAL CONFORMANCE WITH DESIGN CONCEPT ONLY. ANY DEVIATION FROM THE PLANS OR SPECIFICATIONS NOT CLEARLY NOTED BY THE CONTRACTOR HAS NOT BEEN REVIEWED. REVIEW BY THE ENGINEER SHALL NOT RELIEVE THE CONTRACTOR OF THE CONTRACTUAL RESPONSIBILITY FOR ANY ERRORS OR DEVIATION FROM THE CONTRACT REQUIREMENTS.

RICK HEBERT — REVIEWER
2/2/2015 — DATE

NO.	DATE	REMARKS	BY

REVISIONS

CASCO BAY STEEL STRUCTURES
ONE WALLACE AVENUE
SOUTH PORTLAND, ME 04106
PHONE: 207-780-6722
FAX: 207-780-6726

STRUCTURE: BENMONT AVE. (TH-7) (URBAN MINOR ARTERIAL)
LOCATION: TOWN OF BENNINGTON, VERMONT
PROJECT NO.: BRIDGE NO. 57 PROJECT NO. BRF 1000(16)
ENGINEER: STATE OF VERMONT AGENCY OF TRANSPORTATION
CUSTOMER: ALPINE CONSTRUCTION
ITEM: GIRDER ~ 11G1C
SURFACE PREP.: SSPC-SP10 OPEN HOLES:
PAINT: NONE

APPROVAL	DRAWN	GDC	12-8-14	SHEET NO. 11B	JOB NO. 605
SHOP	CHECKED	PM	1-5-15		

1411-9

G11C-1411B

Sheet 11B - Plotted: 01/08/2015 @ 08:39 (HEATHER)

Spacing of waterline support beams are not all at 9'-0" spaces as shown on Contract Drawing Sheet 39 of 75. Maximum variation appears to be 9". The increase in span is acceptable, however the Contractor should refer to the Special Provision (Water Main on Bridge) to ensure compliance with the hanger distance to pipe joint requirements are also met.

2

T.Y. LIN INTERNATIONAL

THE STAMPED DOCUMENTS ARE HEREBY:

___ APPROVED
_X_ APPROVED AS NOTED
___ REVISE AND RESUBMIT

SEE TRANSMITTAL FOR ADDITIONAL INFORMATION AS APPLICABLE.

THIS REVIEW IS FOR GENERAL CONFORMANCE WITH DESIGN CONCEPT ONLY. ANY DEVIATION FROM THE PLANS OR SPECIFICATIONS NOT CLEARLY NOTED BY THE CONTRACTOR HAS NOT BEEN REVIEWED. REVIEW BY THE ENGINEER SHALL NOT RELIEVE THE CONTRACTOR OF THE CONTRACTUAL RESPONSIBILITY FOR ANY ERRORS OR DEVIATION FROM THE CONTRACT REQUIREMENTS.

RICK HEBERT — REVIEWER — 2/2/2015 — DATE

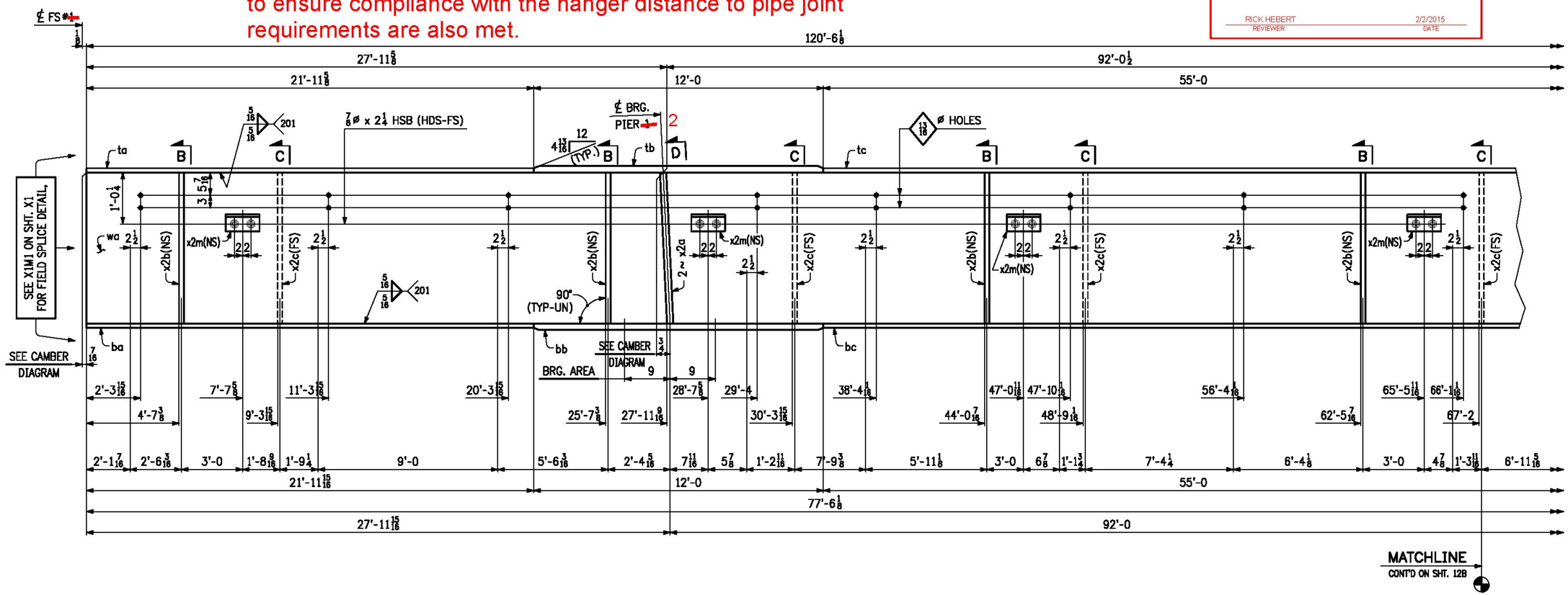

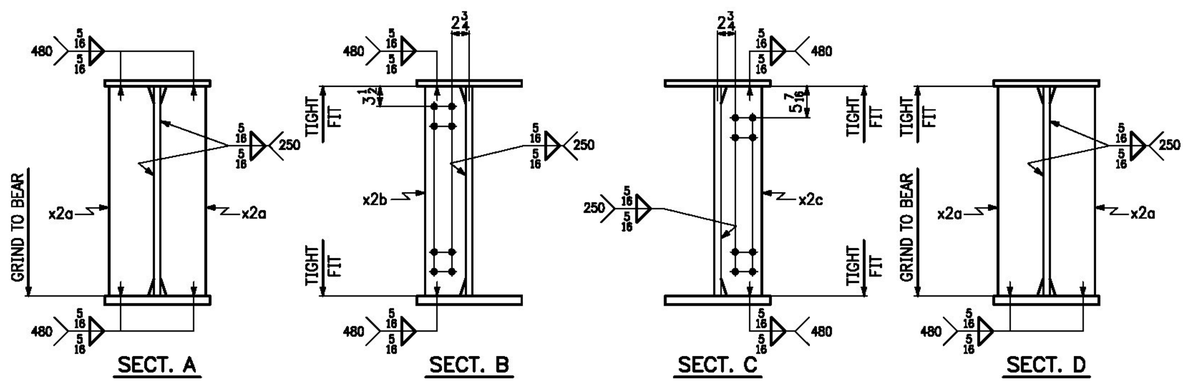

ONE ~ GIRDER ~ 12G2C

- FOR GIRDER STANDARD DETAILS, SEE SHT. X2.
- FOR WEB CUTTING DIAGRAM, SEE SHT. C4.
- FOR FLANGE CUTTING DIAGRAMS, SEE SHT. C4.
- FOR GENERAL NOTES, SEE SHT. GN1.
- "BRG. AREA" INDICATES AREA THAT MUST BE FLAT TO PROVIDE A UNIFORM EVEN CONTACT WITH SOLE PLATE.

NO.	DATE	REMARKS	BY
		REVISIONS	

CASCO BAY STEEL STRUCTURES
ONE WALLACE AVENUE
SOUTH PORTLAND, ME 04106
PHONE: 207-780-6722
FAX: 207-780-6726

STRUCTURE	BENMONT AVE. (TH-7) (URBAN MINOR ARTERIAL)
LOCATION	TOWN OF BENNINGTON, VERMONT
PROJECT NO.	BRIDGE NO. 57 PROJECT NO. BRF 1000(16)
ENGINEER	STATE OF VERMONT AGENCY OF TRANSPORTATION
CUSTOMER	ALPINE CONSTRUCTION
ITEM	GIRDER ~ 12G2C
SURFACE PREP.	SSPC-SP10
OPEN HOLES	15/16ø (UN)
PAINT	NONE

APPROVAL	DRAWN	GDC	12-8-14	SHEET NO. 12AB	JOB NO. 605
SHOP	CHECKED	PM	1-6-15		

1411-9

G12C-1411

Sheet 12AB - Plotted: 01/06/2015 @ 08:39 (REVISED)

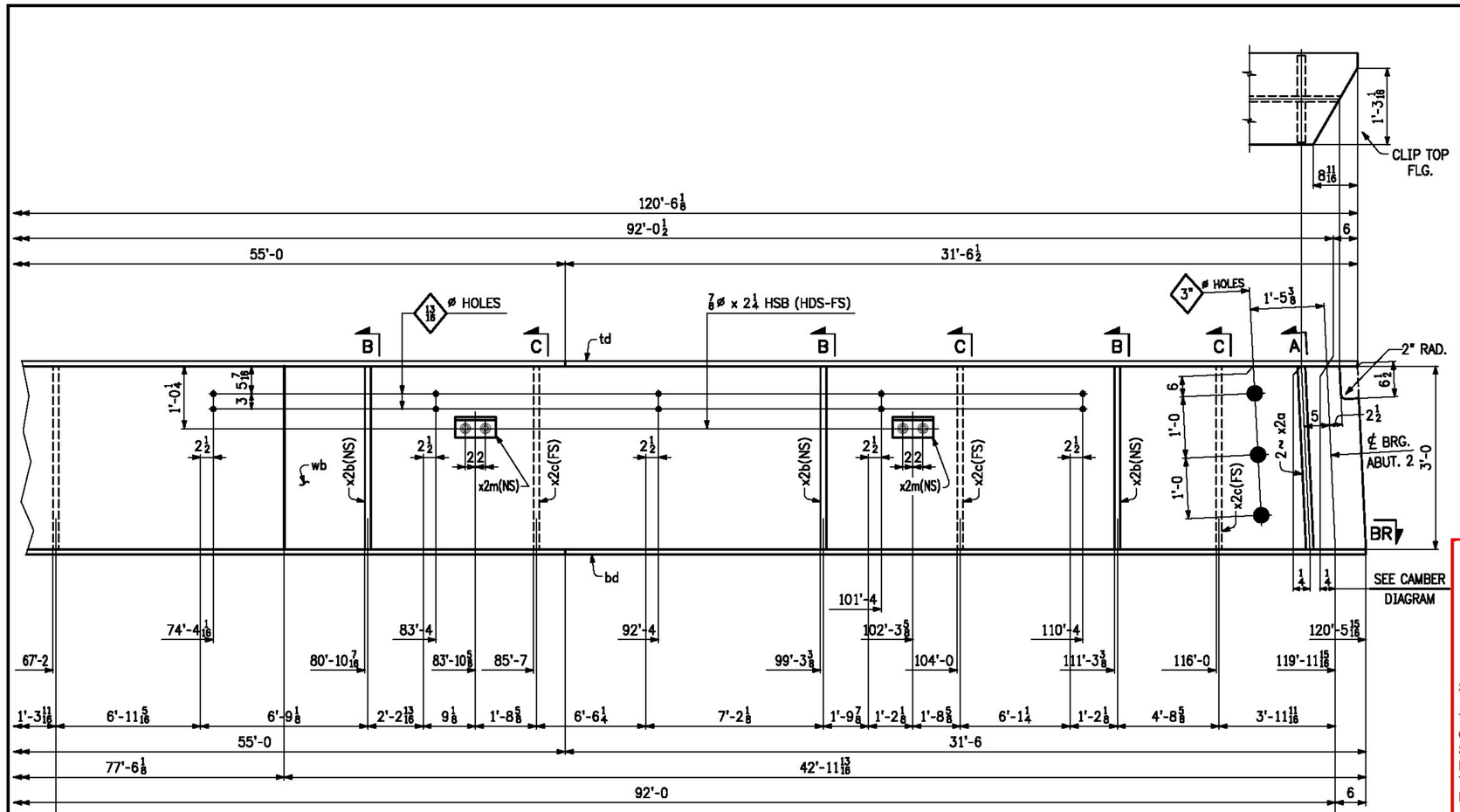

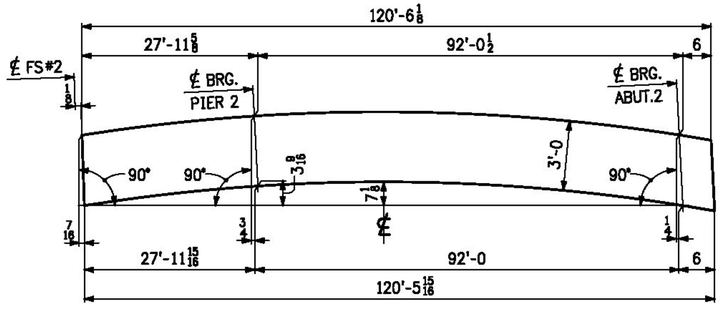

CAMBER DIAGRAM

LINE	NO. OF PCS.	SHIP MARK	ASS'Y MARK	MATERIAL SHAPE	MATERIAL SECTION	LENGTH FT.	LENGTH IN.	MATERIAL SPEC.	ITEM NO.	REMARKS
1	1	12G2C			GIRDER					23,406 lbs.
2	1		wa	PL	1/2 x 36	77	6 11/16	M270-50WT2	1/21	4750 lbs.
3	1		wb	PL	1/2 x 36	43	0 1/4	M270-50WT2	1/28	2635 lbs.
4	1		ta	PL	1 x 18	21	11 5/8	M270-50WT2	2/20	1346 lbs.
5	1		tb	PL	1 3/8 x 18	12	0	M270-50WT2	2/13	1011 lbs.
6	1		tc	PL	1 x 18	55	0	M270-50WT2	2/17	3369 lbs.
7	1		td	PL	1 x 18	31	6 1/2	M270-50WT2	2/18	1932 lbs.
8	1		ba	PL	1 x 18	21	11 15/16	M270-50WT2	2/20	1347 lbs.
9	1		bb	PL	1 1/4 x 18	12	0	M270-50WT2	2/15	919 lbs.
10	1		bc	PL	1 x 18	55	0	M270-50WT2	2/17	3369 lbs.
11	1		bd	PL	1 x 18	31	6	M270-50WT2	2/18	1929 lbs.
12										
13	4		x2a	PL	3/4 x 8 1/2	3	0	M270-50W	3/10	G1E 260 lbs.
14	7		x2b	PL	1/2 x 7	3	0	M270-50W	3/11	250 lbs.
15	7		x2c	PL	1/2 x 7	3	0	M270-50W	3/11	250 lbs.
16	6		x2m	L	4 x 4 x 3/8	0	8	M270-50W	3/13	39 lbs.
17										
18	12				7/8ø HSB	0	2 1/4	M164 TYPE 3	6/2	
19	12				7/8ø WASHER			M293-3	6/6	
20										
21										
22										
23										
24										
25										

T.Y. LIN INTERNATIONAL

THE STAMPED DOCUMENTS ARE HEREBY:

__X__ APPROVED
_____ APPROVED AS NOTED
_____ REVISE AND RESUBMIT

SEE TRANSMITTAL FOR ADDITIONAL INFORMATION AS APPLICABLE.

THIS REVIEW IS FOR GENERAL CONFORMANCE WITH DESIGN CONCEPT ONLY. ANY DEVIATION FROM THE PLANS OR SPECIFICATIONS NOT CLEARLY NOTED BY THE CONTRACTOR HAS NOT BEEN REVIEWED. REVIEW BY THE ENGINEER SHALL NOT RELIEVE THE CONTRACTOR OF THE CONTRACTUAL RESPONSIBILITY FOR ANY ERRORS OR DEVIATION FROM THE CONTRACT REQUIREMENTS.

RICK HEBERT — REVIEWER
2/2/2015 — DATE

NO.	DATE	REMARKS	BY

REVISIONS

CASCO BAY STEEL STRUCTURES
ONE WALLACE AVENUE
SOUTH PORTLAND, ME 04106
PHONE: 207-780-6722
FAX: 207-780-6726

STRUCTURE: BENMONT AVE. (TH-7) (URBAN MINOR ARTERIAL)
LOCATION: TOWN OF BENNINGTON, VERMONT
PROJECT NO.: BRIDGE NO. 57 PROJECT NO. BRF 1000(16)
ENGINEER: STATE OF VERMONT AGENCY OF TRANSPORTATION
CUSTOMER: ALPINE CONSTRUCTION
ITEM: GIRDER ~ 12G2C
SURFACE PREP.: SSPC-SP10 OPEN HOLES: 15/16ø (UN)
PAINT: NONE

APPROVAL	DRAWN	GDC	12-8-14	SHEET NO.	JOB NO.
SHOP	CHECKED	PM	1-6-15	12B	605

1411-9

G12C-1411B

Sheet 123 - Plotted: 01/06/2015 @ 08:39 (HEATHER)

T.Y. LIN INTERNATIONAL

THE STAMPED DOCUMENTS ARE HEREBY:

____ APPROVED
__X__ APPROVED AS NOTED
____ REVISE AND RESUBMIT

SEE TRANSMITTAL FOR ADDITIONAL INFORMATION AS APPLICABLE.

THIS REVIEW IS FOR GENERAL CONFORMANCE WITH DESIGN CONCEPT ONLY. ANY DEVIATION FROM THE PLANS OR SPECIFICATIONS NOT CLEARLY NOTED BY THE CONTRACTOR HAS NOT BEEN REVIEWED. REVIEW BY THE ENGINEER SHALL NOT RELIEVE THE CONTRACTOR OF THE CONTRACTUAL RESPONSIBILITY FOR ANY ERRORS OR DEVIATION FROM THE CONTRACT REQUIREMENTS.

RICK HEBERT — REVIEWER — 2/2/2015 — DATE

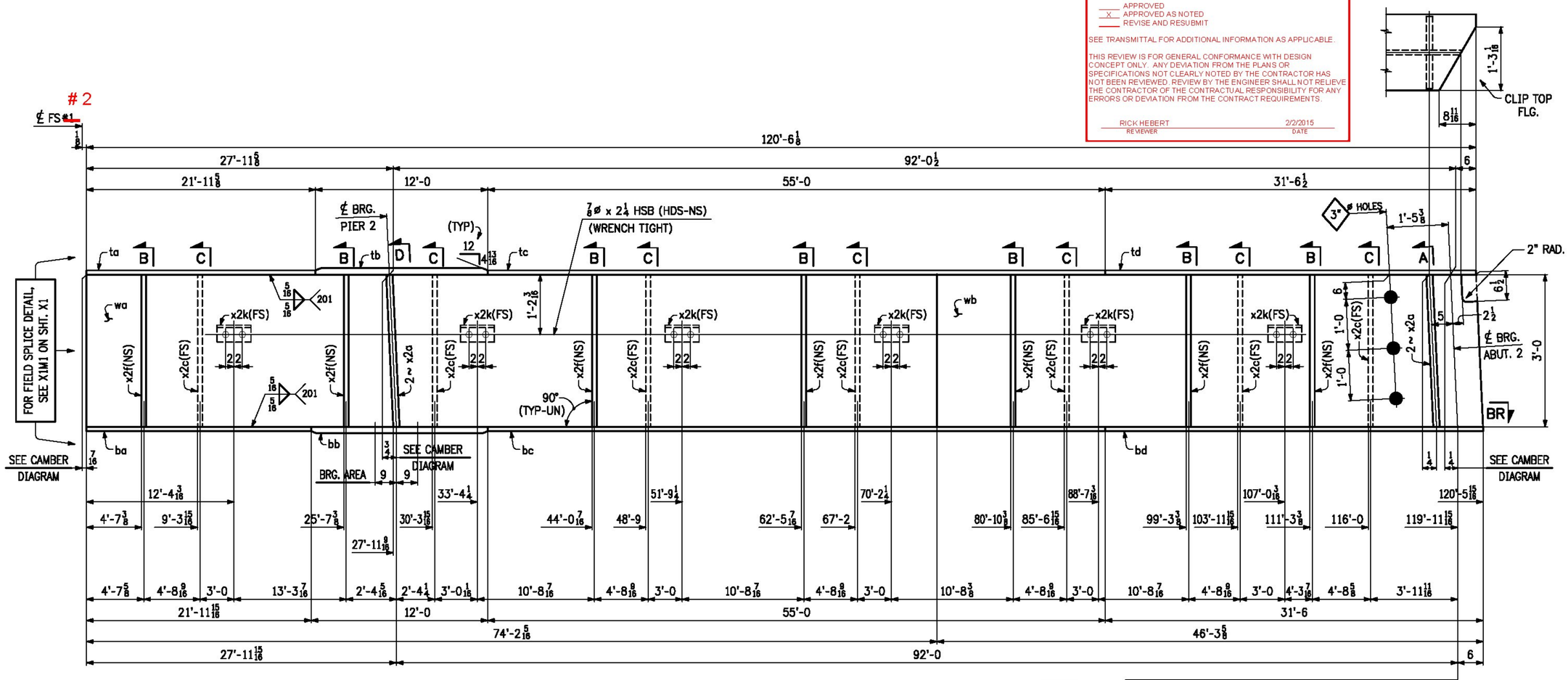

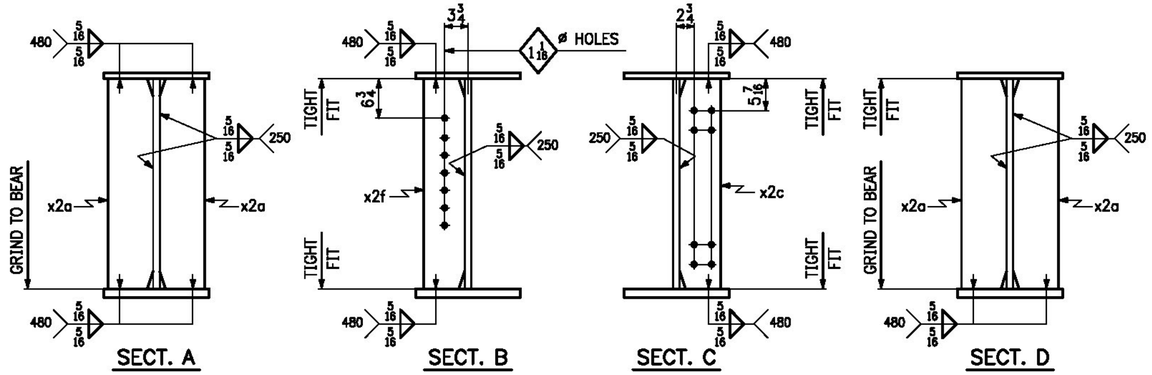

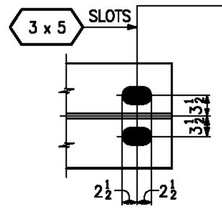

ONE ~ GIRDER ~ 13G3C

- FOR GIRDER STANDARD DETAILS, SEE SHT. X2.
- FOR WEB CUTTING DIAGRAM, SEE SHT. C4.
- FOR FLANGE CUTTING DIAGRAMS, SEE SHT. C4.
- FOR GENERAL NOTES, SEE SHT. GN1.
- "BRG. AREA" INDICATES AREA THAT MUST BE FLAT TO PROVIDE A UNIFORM EVEN CONTACT WITH SOLE PLATE.

NO.	DATE	REMARKS	BY
		REVISIONS	

CASCO BAY STEEL STRUCTURES

CASCO BAY STEEL STRUCTURES
ONE WALLACE AVENUE — PHONE: 207-780-6722
SOUTH PORTLAND, ME 04106 — FAX: 207-780-6726

STRUCTURE	BENMONT AVE. (TH-7) (URBAN MINOR ARTERIAL)
LOCATION	TOWN OF BENNINGTON, VERMONT
PROJECT NO.	BRIDGE NO. 57 PROJECT NO. BRF 1000(16)
ENGINEER	STATE OF VERMONT AGENCY OF TRANSPORTATION
CUSTOMER	ALPINE CONSTRUCTION
ITEM	GIRDER ~ 13G3C
SURFACE PREP.	SSPC-SP10 — OPEN HOLES 15/16ø (UN)
PAINT	NONE

APPROVAL	DRAWN	GDC	12-9-14	SHEET NO. 13AB	JOB NO. 605
SHOP	CHECKED	PM	1-6-15		

1411-9 G13C-1411

Sheet 13AB - Plotted: 01/06/2015 @ 08:39 (HENTHORN)

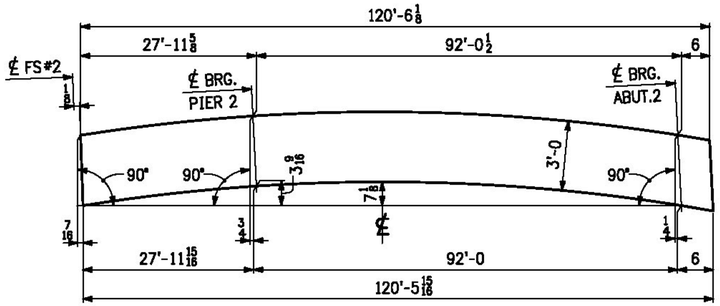

CAMBER DIAGRAM

LINE	NO. OF PCS.	SHIP MARK	ASS'Y MARK	MATERIAL SHAPE	SECTION	LENGTH FT.	LENGTH IN.	MATERIAL SPEC.	ITEM NO.	REMARKS
1	1	13G3C			GIRDER					23,336 lbs.
2	1		wa	PL	1/2 x 36	74	2 13/16	M270-50WT2	1/22	4547 lbs.
3	1		wb	PL	1/2 x 36	46	4 1/8	M270-50WT2	1/27	2839 lbs.
4	1		ta	PL	1 x 18	21	11 5/8	M270-50WT2	2/20	1346 lbs.
5	1		tb	PL	1 3/8 x 18	12	0	M270-50WT2	2/13	1011 lbs.
6	1		tc	PL	1 x 18	55	0	M270-50WT2	2/17	3369 lbs.
7	1		td	PL	1 x 18	31	6 1/2	M270-50WT2	2/19	1932 lbs.
8	1		ba	PL	1 x 18	21	11 15/16	M270-50WT2	2/20	1347 lbs.
9	1		bb	PL	1 1/4 x 18	12	0	M270-50WT2	2/15	919 lbs.
10	1		bc	PL	1 x 18	55	0	M270-50WT2	2/17	3369 lbs.
11	1		bd	PL	1 x 18	31	6	M270-50WT2	2/18	1929 lbs.
12										
13	4		x2a	PL	3/4 x 8 1/2	3	0	M270-50W	3/10	G1E 260 lbs.
14	7		x2c	PL	1/2 x 7	3	0	M270-50W	3/11	250 lbs.
15	7		x2f	PL	1/2 x 5	3	0	M270-50W	3/12	179 lbs.
16	6		x2k	L	4 x 4 x 3/8	0	8	M270-50W	3/13	39 lbs.
17										
18	12				7/8ø HSB	0	2 1/4	M164 TYPE 3	6/2	
19	12				7/8ø WASHER			M293-3	6/6	
20										
21										
22										
23										
24										
25										

T.Y. LIN INTERNATIONAL

THE STAMPED DOCUMENTS ARE HEREBY:

__X__ APPROVED
____ APPROVED AS NOTED
____ REVISE AND RESUBMIT

SEE TRANSMITTAL FOR ADDITIONAL INFORMATION AS APPLICABLE.

THIS REVIEW IS FOR GENERAL CONFORMANCE WITH DESIGN CONCEPT ONLY. ANY DEVIATION FROM THE PLANS OR SPECIFICATIONS NOT CLEARLY NOTED BY THE CONTRACTOR HAS NOT BEEN REVIEWED. REVIEW BY THE ENGINEER SHALL NOT RELIEVE THE CONTRACTOR OF THE CONTRACTUAL RESPONSIBILITY FOR ANY ERRORS OR DEVIATION FROM THE CONTRACT REQUIREMENTS.

RICK HEBERT — REVIEWER
2/2/2015 — DATE

NO.	DATE	REMARKS	BY

REVISIONS

CASCO BAY STEEL STRUCTURES
ONE WALLACE AVENUE
SOUTH PORTLAND, ME 04106
PHONE: 207-780-6722
FAX: 207-780-6726

STRUCTURE: BENMONT AVE. (TH-7) (URBAN MINOR ARTERIAL)
LOCATION: TOWN OF BENNINGTON, VERMONT
PROJECT NO.: BRIDGE NO. 57 PROJECT NO. BRF 1000(16)
ENGINEER: STATE OF VERMONT AGENCY OF TRANSPORTATION
CUSTOMER: ALPINE CONSTRUCTION
ITEM: GIRDER ~ 13G3C
SURFACE PREP.: SSPC-SP10 OPEN HOLES:
PAINT: NONE

APPROVAL	DRAWN	GDC	12-8-14	SHEET NO.	JOB NO.
SHOP	CHECKED	PM	1-6-15	13B	605

1411-9

G13C-1411B

Sheet 13B - Plotted 01/06/2015 @ 08:39 (HEATHER)

T.Y. LIN INTERNATIONAL

THE STAMPED DOCUMENTS ARE HEREBY:

_X_ APPROVED
___ APPROVED AS NOTED
___ REVISE AND RESUBMIT

SEE TRANSMITTAL FOR ADDITIONAL INFORMATION AS APPLICABLE.

THIS REVIEW IS FOR GENERAL CONFORMANCE WITH DESIGN CONCEPT ONLY. ANY DEVIATION FROM THE PLANS OR SPECIFICATIONS NOT CLEARLY NOTED BY THE CONTRACTOR HAS NOT BEEN REVIEWED. REVIEW BY THE ENGINEER SHALL NOT RELIEVE THE CONTRACTOR OF THE CONTRACTUAL RESPONSIBILITY FOR ANY ERRORS OR DEVIATION FROM THE CONTRACT REQUIREMENTS.

RICK HEBERT (REVIEWER) 2/2/2015 (DATE)

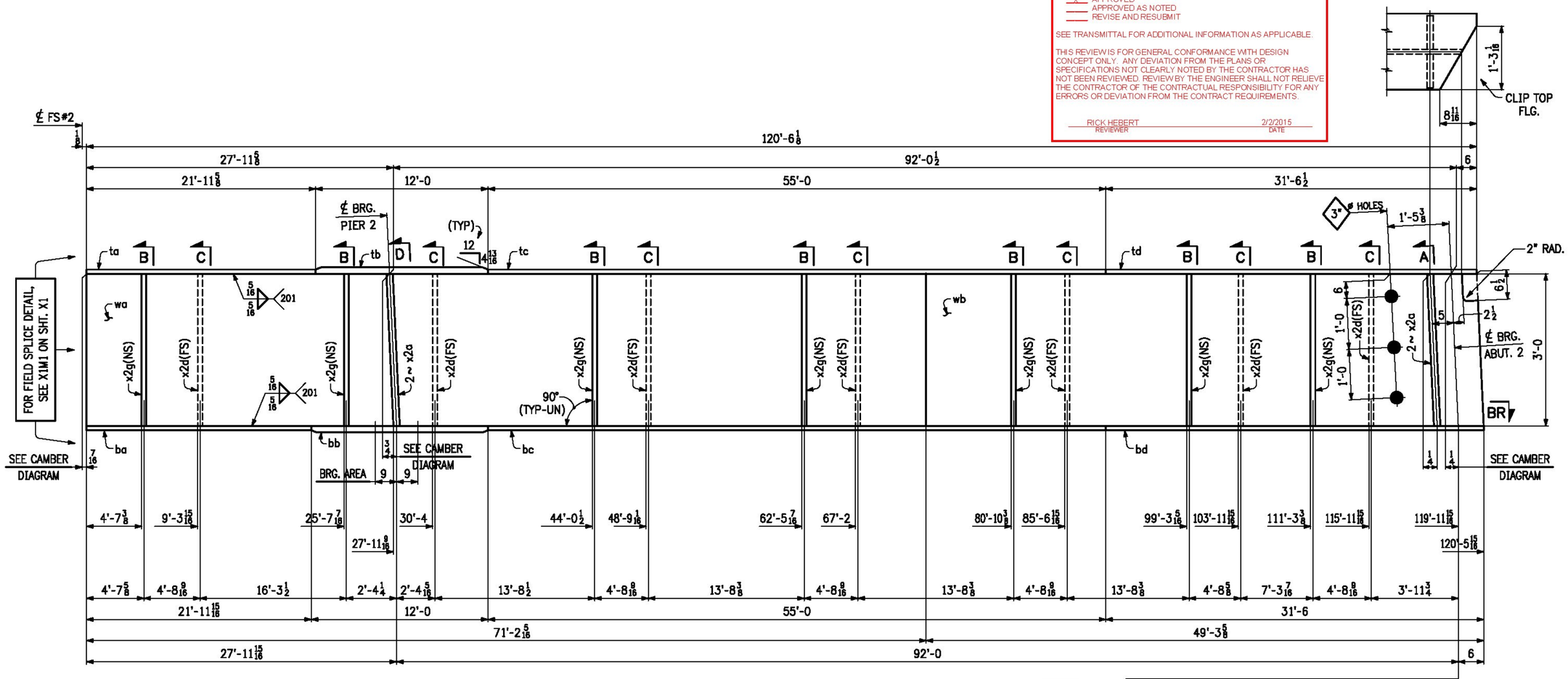

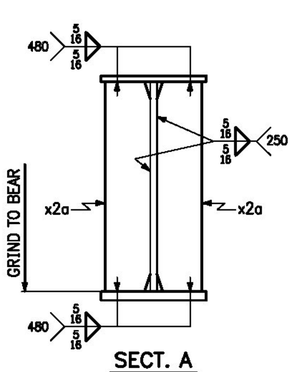

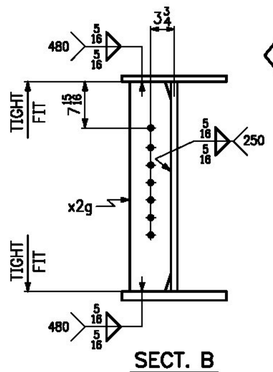

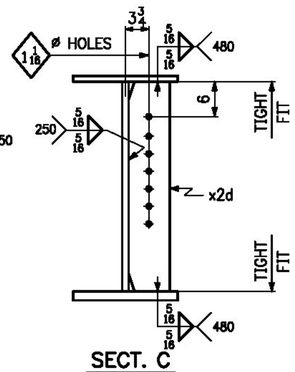

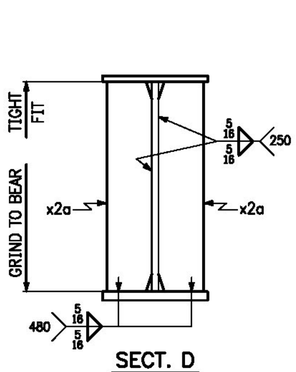

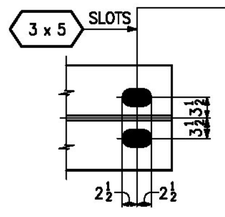

ONE ~ GIRDER ~ 14G4C

- FOR GIRDER STANDARD DETAILS, SEE SHT. X2.
- FOR WEB CUTTING DIAGRAM, SEE SHT. C5.
- FOR FLANGE CUTTING DIAGRAMS, SEE SHT. C5.
- FOR GENERAL NOTES, SEE SHT. GN1.
- "BRG. AREA" INDICATES AREA THAT MUST BE FLAT TO PROVIDE A UNIFORM EVEN CONTACT WITH SOLE PLATE.

NO.	DATE	REMARKS	BY
		REVISIONS	

CASCO BAY STEEL STRUCTURES
ONE WALLACE AVENUE
SOUTH PORTLAND, ME 04106
PHONE: 207-780-6722
FAX: 207-780-6726

STRUCTURE	BENMONT AVE. (TH-7) (URBAN MINOR ARTERIAL)
LOCATION	TOWN OF BENNINGTON, VERMONT
PROJECT NO.	BRIDGE NO. 57 PROJECT NO. BRF 1000(16)
ENGINEER	STATE OF VERMONT AGENCY OF TRANSPORTATION
CUSTOMER	ALPINE CONSTRUCTION
ITEM	GIRDER ~ 14G4C
SURFACE PREP.	SSPC-SP10
OPEN HOLES	15/16ø (UN)
PAINT	NONE

APPROVAL	DRAWN	GDC	12-9-14	SHEET NO. 14AB	JOB NO. 605
SHOP	CHECKED	FM	1-6-15		

1411-9 G14C-1411

Sheet 14A9 - Plotted: 01/06/2015 @ 08:39 (HENTHORN)

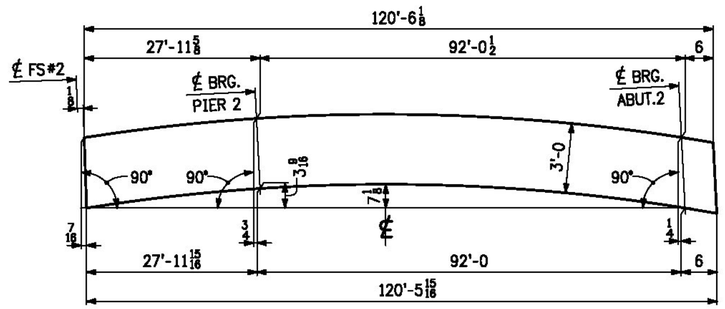

CAMBER DIAGRAM

LINE	NO. OF PCS.	SHIP MARK	ASS'Y MARK	MATERIAL SHAPE	SECTION	LENGTH FT.	LENGTH IN.	MATERIAL SPEC.	ITEM NO.	REMARKS
1	1	14G4C			GIRDER					23,225 lbs.
2	1		wa	PL	1/2 x 36	71	2 13/16	M270-50WT2	1/24	4363 lbs.
3	1		wb	PL	1/2 x 36	49	4 1/8	M270-50WT2	1/25	3022 lbs.
4	1		ta	PL	1 x 18	21	11 5/8	M270-50WT2	2/20	1346 lbs.
5	1		tb	PL	1 3/8 x 18	12	0	M270-50WT2	2/13	1011 lbs.
6	1		tc	PL	1 x 18	55	0	M270-50WT2	2/17	3369 lbs.
7	1		td	PL	1 x 18	31	6 1/2	M270-50WT2	2/19	1932 lbs.
8	1		ba	PL	1 x 18	21	11 15/16	M270-50WT2	2/20	1347 lbs.
9	1		bb	PL	1 1/4 x 18	12	0	M270-50WT2	2/15	919 lbs.
10	1		bc	PL	1 x 18	55	0	M270-50WT2	2/17	3369 lbs.
11	1		bd	PL	1 x 18	31	6	M270-50WT2	2/18	1929 lbs.
12										
13	4		x2a	PL	3/4 x 8 1/2	3	0	M270-50W	3/10	G1E 260 lbs.
14	7		x2d	PL	1/2 x 5	3	0	M270-50W	3/12	179 lbs.
15	7		x2g	PL	1/2 x 5	3	0	M270-50W	3/12	179 lbs.
16										
17										
18										
19										
20										
21										
22										
23										
24										
25										

T.Y. LIN INTERNATIONAL

THE STAMPED DOCUMENTS ARE HEREBY:

__X__ APPROVED
_____ APPROVED AS NOTED
_____ REVISE AND RESUBMIT

SEE TRANSMITTAL FOR ADDITIONAL INFORMATION AS APPLICABLE.

THIS REVIEW IS FOR GENERAL CONFORMANCE WITH DESIGN CONCEPT ONLY. ANY DEVIATION FROM THE PLANS OR SPECIFICATIONS NOT CLEARLY NOTED BY THE CONTRACTOR HAS NOT BEEN REVIEWED. REVIEW BY THE ENGINEER SHALL NOT RELIEVE THE CONTRACTOR OF THE CONTRACTUAL RESPONSIBILITY FOR ANY ERRORS OR DEVIATION FROM THE CONTRACT REQUIREMENTS.

RICK HEBERT — REVIEWER
2/2/2015 — DATE

NO.	DATE	REMARKS	BY

REVISIONS

CASCO BAY STEEL STRUCTURES
ONE WALLACE AVENUE
SOUTH PORTLAND, ME 04106
PHONE: 207-780-6722
FAX: 207-780-6726

STRUCTURE: BENMONT AVE. (TH-7) (URBAN MINOR ARTERIAL)
LOCATION: TOWN OF BENNINGTON, VERMONT
PROJECT NO.: BRIDGE NO. 57 PROJECT NO. BRF 1000(16)
ENGINEER: STATE OF VERMONT AGENCY OF TRANSPORTATION
CUSTOMER: ALPINE CONSTRUCTION
ITEM: GIRDER ~ 14G4C
SURFACE PREP.: SSPC-SP10 OPEN HOLES:
PAINT: NONE

APPROVAL	DRAWN	GDC	12-8-14	SHEET NO.	JOB NO.
SHOP	CHECKED	FM	1-6-15	14B	605

1411-9 G14C-1411B

Sheet 149 - Plotted 01/06/2015 @ 08:40 (HEATHER)

T.Y. LIN INTERNATIONAL

THE STAMPED DOCUMENTS ARE HEREBY:

_X_ APPROVED
___ APPROVED AS NOTED
___ REVISE AND RESUBMIT

SEE TRANSMITTAL FOR ADDITIONAL INFORMATION AS APPLICABLE.

THIS REVIEW IS FOR GENERAL CONFORMANCE WITH DESIGN CONCEPT ONLY. ANY DEVIATION FROM THE PLANS OR SPECIFICATIONS NOT CLEARLY NOTED BY THE CONTRACTOR HAS NOT BEEN REVIEWED. REVIEW BY THE ENGINEER SHALL NOT RELIEVE THE CONTRACTOR OF THE CONTRACTUAL RESPONSIBILITY FOR ANY ERRORS OR DEVIATION FROM THE CONTRACT REQUIREMENTS.

RICK HEBERT — REVIEWER — 2/2/2015 — DATE

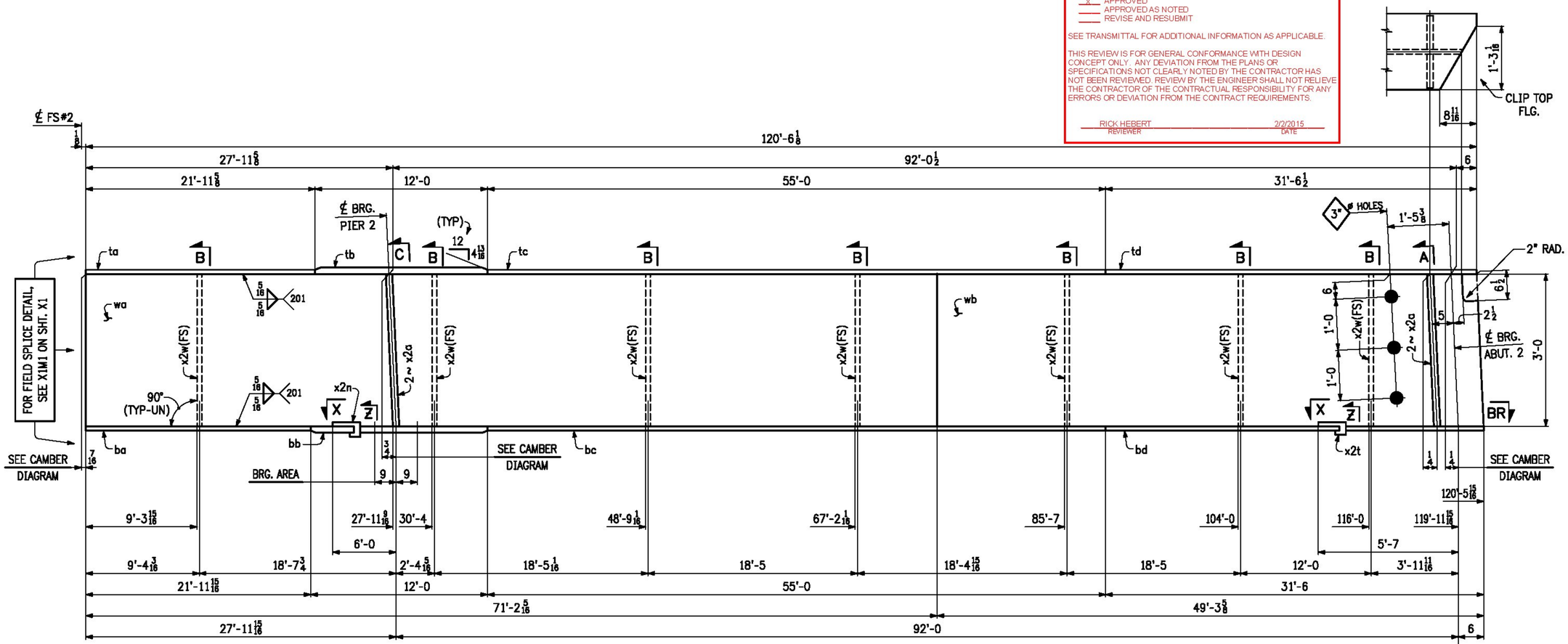

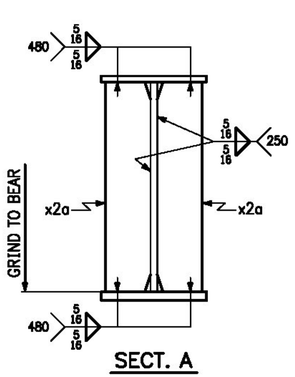

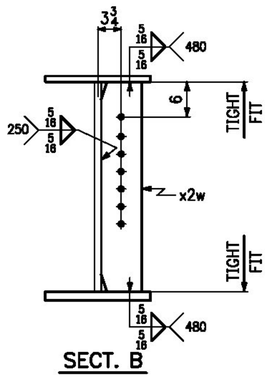

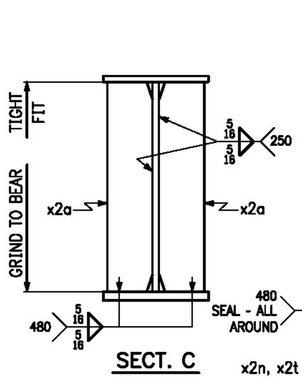

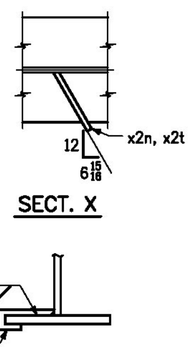

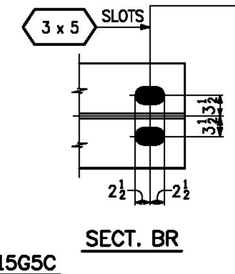

ONE ~ GIRDER ~ 15G5C

- FOR GIRDER STANDARD DETAILS, SEE SHT. X2.
- FOR WEB CUTTING DIAGRAM, SEE SHT. C5.
- FOR FLANGE CUTTING DIAGRAMS, SEE SHT. C5.
- FOR GENERAL NOTES, SEE SHT. GN1.
- "BRG. AREA" INDICATES AREA THAT MUST BE FLAT TO PROVIDE A UNIFORM EVEN CONTACT WITH SOLE PLATE.

NO.	DATE	REMARKS	BY
		REVISIONS	

CASCO BAY STEEL STRUCTURES
ONE WALLACE AVENUE — PHONE: 207-780-6722
SOUTH PORTLAND, ME 04106 — FAX: 207-780-6726

STRUCTURE	BENMONT AVE. (TH-7) (URBAN MINOR ARTERIAL)
LOCATION	TOWN OF BENNINGTON, VERMONT
PROJECT NO.	BRIDGE NO. 57 PROJECT NO. BRF 1000(16)
ENGINEER	STATE OF VERMONT AGENCY OF TRANSPORTATION
CUSTOMER	ALPINE CONSTRUCTION
ITEM	GIRDER ~ 15G5C
SURFACE PREP.	SSPC-SP10 — OPEN HOLES 15/16ø (UN)
PAINT	NONE

APPROVAL	DRAWN	GDC	12-9-14	SHEET NO. 15AB	JOB NO. 605
SHOP	CHECKED	FM	1-6-15		

1411-9 — G15C-1411

Sheet 1540 - Plotted: 01/06/2015 @ 08:40 (NEWHEIDI)

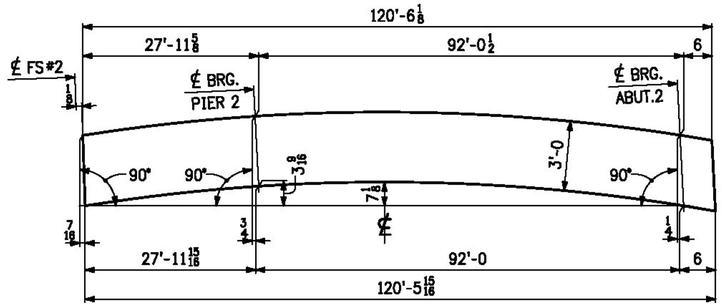

CAMBER DIAGRAM

LINE	NO. OF PCS.	SHIP MARK	ASS'Y MARK	MATERIAL SHAPE	SECTION	LENGTH FT.	LENGTH IN.	MATERIAL SPEC.	ITEM NO.	REMARKS
1	1	15G5C			GIRDER					23,052 lbs.
2	1		wa	PL	1/2 x 36	71	2 13/16	M270-50WT2	1/24	4363 lbs.
3	1		wb	PL	1/2 x 36	49	4 1/8	M270-50WT2	1/25	3022 lbs.
4	1		ta	PL	1 x 18	21	11 5/8	M270-50WT2	2/20	1346 lbs.
5	1		tb	PL	1 3/8 x 18	12	0	M270-50WT2	2/13	1011 lbs.
6	1		tc	PL	1 x 18	55	0	M270-50WT2	2/17	3369 lbs.
7	1		td	PL	1 x 18	31	6 1/2	M270-50WT2	2/19	1932 lbs.
8	1		ba	PL	1 x 18	21	11 15/16	M270-50WT2	2/20	1347 lbs.
9	1		bb	PL	1 1/4 x 18	12	0	M270-50WT2	2/15	919 lbs.
10	1		bc	PL	1 x 18	55	0	M270-50WT2	2/17	3369 lbs.
11	1		bd	PL	1 x 18	31	6	M270-50WT2	2/18	1929 lbs.
12										
13	4		x2a	PL	3/4 x 8 1/2	3	0	M270-50W	3/10	G1E 260 lbs.
14	7		x2w	PL	1/2 x 5	3	0	M270-50W	3/12	179 lbs.
15	1		x2n	PL	1/4 x 3 1/4	1	0 1/8	M270-50W	7/2	3 lbs.
16	1		x2t	PL	1/4 x 3	1	0 1/8	M270-50W	7/2	3 lbs.
17										
18										
19										
20										
21										
22										
23										
24										
25										

T.Y. LIN INTERNATIONAL

THE STAMPED DOCUMENTS ARE HEREBY:

__X__ APPROVED
_____ APPROVED AS NOTED
_____ REVISE AND RESUBMIT

SEE TRANSMITTAL FOR ADDITIONAL INFORMATION AS APPLICABLE.

THIS REVIEW IS FOR GENERAL CONFORMANCE WITH DESIGN CONCEPT ONLY. ANY DEVIATION FROM THE PLANS OR SPECIFICATIONS NOT CLEARLY NOTED BY THE CONTRACTOR HAS NOT BEEN REVIEWED. REVIEW BY THE ENGINEER SHALL NOT RELIEVE THE CONTRACTOR OF THE CONTRACTUAL RESPONSIBILITY FOR ANY ERRORS OR DEVIATION FROM THE CONTRACT REQUIREMENTS.

RICK HEBERT — REVIEWER
2/2/2015 — DATE

NO.	DATE	REMARKS	BY

REVISIONS

CASCO BAY STEEL STRUCTURES
ONE WALLACE AVENUE
SOUTH PORTLAND, ME 04106
PHONE: 207-780-6722
FAX: 207-780-6726

STRUCTURE: BENMONT AVE. (TH-7) (URBAN MINOR ARTERIAL)
LOCATION: TOWN OF BENNINGTON, VERMONT
PROJECT NO.: BRIDGE NO. 57 PROJECT NO. BRF 1000(16)
ENGINEER: STATE OF VERMONT AGENCY OF TRANSPORTATION
CUSTOMER: ALPINE CONSTRUCTION
ITEM: GIRDER ~ 15G5C
SURFACE PREP.: SSPC-SP10 OPEN HOLES:
PAINT: NONE

APPROVAL	DRAWN	GDC	12-10-14	SHEET NO.	JOB NO.
SHOP	CHECKED	FM	1-6-15	15B	605

1411-9

G15C-1411B

Sheet 150 - Plotted 01/06/2015 @ 08:40 (HEATHER)

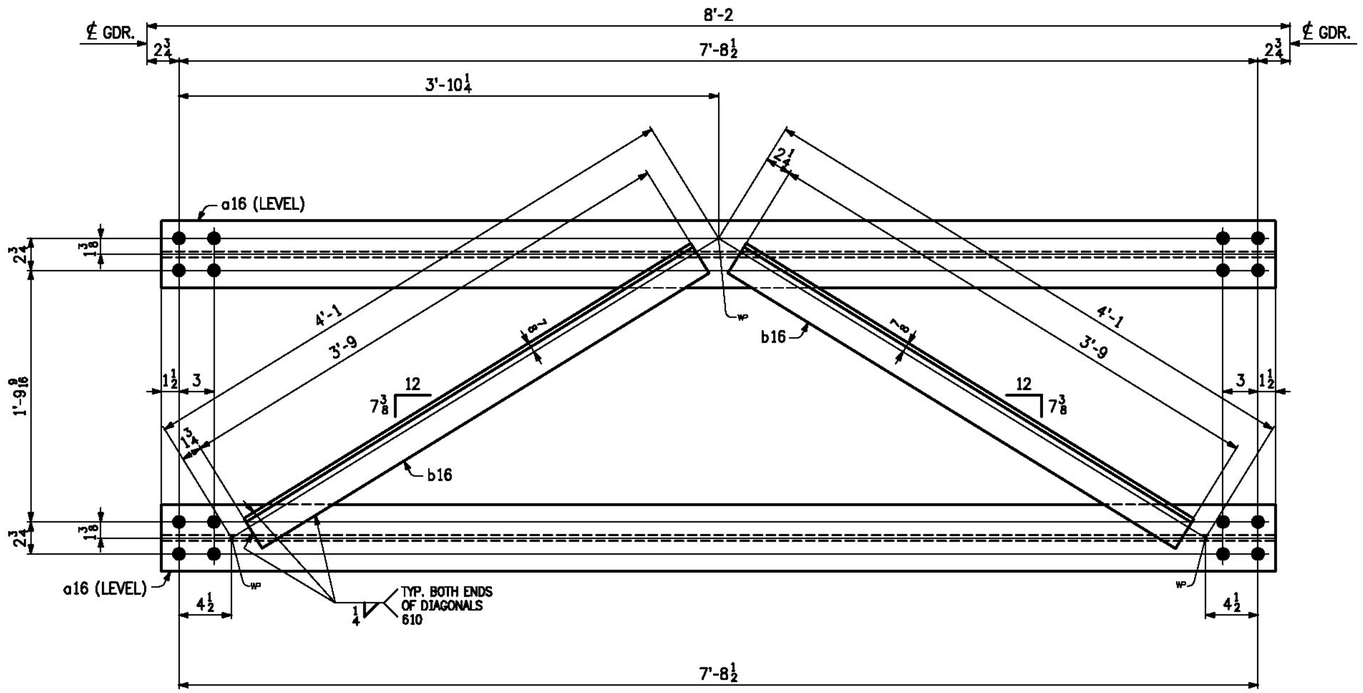

30 ~ CROSSFRAMES ~ 16CF1

LINE	NO. OF PCS.	SHIP MARK	ASS'Y MARK	MATERIAL SHAPE	MATERIAL SECTION	LENGTH FT.	LENGTH IN.	MATERIAL SPEC.	ITEM NO.	REMARKS
1	30	16CF1			CROSSFRAMES					6873 lbs
2	60		a16	WT	5 x 11	7	11½	M270-50W	4/2	5253 lbs
3	60		b16	L	3 x 3 x ⅜	3	9	M270-50W	4/3	1620 lbs
4										
5										
6										
7										
8										
9										
10										
11										
12										
13										
14										
15										
16										
17										
18										
19										
20										
21										
22										
23										
24										
25										

NOTES:

1. FOR GENERAL NOTES, SEE SHT. GN1.

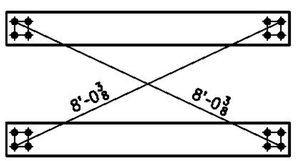

CROSS CORNER CHECK

T.Y. LIN INTERNATIONAL

THE STAMPED DOCUMENTS ARE HEREBY:

__X__ APPROVED
_____ APPROVED AS NOTED
_____ REVISE AND RESUBMIT

SEE TRANSMITTAL FOR ADDITIONAL INFORMATION AS APPLICABLE.

THIS REVIEW IS FOR GENERAL CONFORMANCE WITH DESIGN CONCEPT ONLY. ANY DEVIATION FROM THE PLANS OR SPECIFICATIONS NOT CLEARLY NOTED BY THE CONTRACTOR HAS NOT BEEN REVIEWED. REVIEW BY THE ENGINEER SHALL NOT RELIEVE THE CONTRACTOR OF THE CONTRACTUAL RESPONSIBILITY FOR ANY ERRORS OR DEVIATION FROM THE CONTRACT REQUIREMENTS.

RICK HEBERT — REVIEWER
2/2/2015 — DATE

NO.	DATE	REMARKS	BY

REVISIONS

CASCO BAY STEEL STRUCTURES
ONE WALLACE AVENUE
SOUTH PORTLAND, ME 04106
PHONE: 207-780-6722
FAX: 207-780-6726

STRUCTURE: BENMONT AVE. (TH-7) (URBAN MINOR ARTERIAL)
LOCATION: TOWN OF BENNINGTON, VERMONT
PROJECT NO.: BRIDGE NO. 57 PROJECT NO. BRF 1000(16)
ENGINEER: STATE OF VERMONT AGENCY OF TRANSPORTATION
CUSTOMER: ALPINE CONSTRUCTION
ITEM: CROSSFRAMES
SURFACE PREP.: SSPC-SP10 OPEN HOLES: 15/16ø
PAINT: NONE

APPROVAL	DRAWN GDC 12-4-14	SHEET NO.	JOB NO.
SHOP	CHECKED PM 1-6-15	16	605

1411-13

CF-INT-1411A

Sheet 16 - Plotted: 01/09/2015 @ 08:40 (WEATHER)

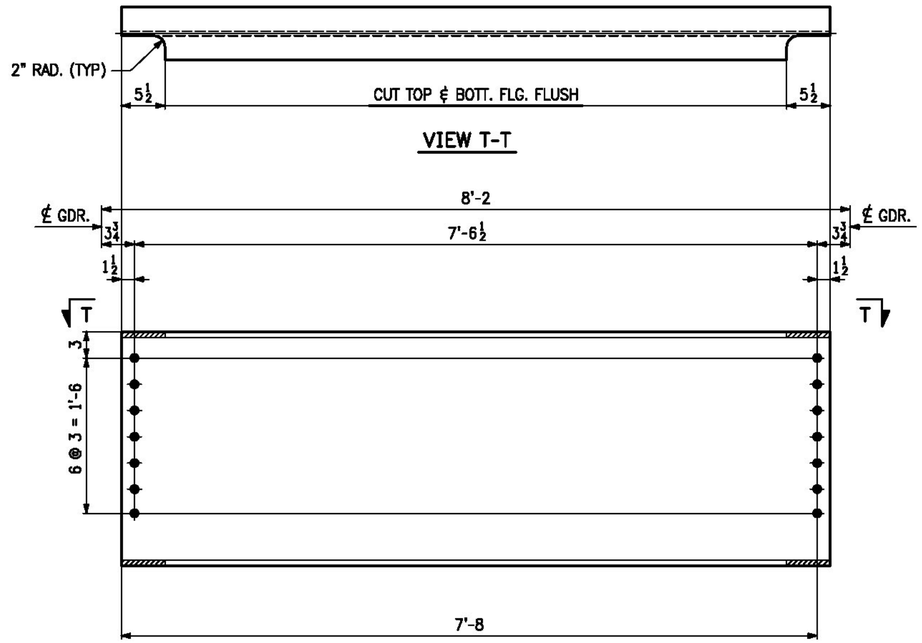

30 ~ DIAPHRAGMS ~ 17D1

LINE	NO. OF PCS.	SHIP MARK	ASS'Y MARK	MATERIAL						
				SHAPE	SECTION	LENGTH FT.	LENGTH IN.	MATERIAL SPEC.	ITEM NO.	REMARKS
1					DIAPHRAGMS					
2	30	17D1		W	27 x 84	7	9½	M270-50W	1/1	19,635 lbs.
3										
4										
5										
6										
7										
8										
9										
10										
11										
12										
13										
14										
15										
16										
17										
18										
19										
20										
21										
22										
23										
24										
25										

NOTES:

1. FOR GENERAL NOTES, SEE SHT. GN1.

T.Y. LIN INTERNATIONAL

THE STAMPED DOCUMENTS ARE HEREBY:

__X__ APPROVED
_____ APPROVED AS NOTED
_____ REVISE AND RESUBMIT

SEE TRANSMITTAL FOR ADDITIONAL INFORMATION AS APPLICABLE.

THIS REVIEW IS FOR GENERAL CONFORMANCE WITH DESIGN CONCEPT ONLY. ANY DEVIATION FROM THE PLANS OR SPECIFICATIONS NOT CLEARLY NOTED BY THE CONTRACTOR HAS NOT BEEN REVIEWED. REVIEW BY THE ENGINEER SHALL NOT RELIEVE THE CONTRACTOR OF THE CONTRACTUAL RESPONSIBILITY FOR ANY ERRORS OR DEVIATION FROM THE CONTRACT REQUIREMENTS.

RICK HEBERT — REVIEWER
2/2/2015 — DATE

NO.	DATE	REMARKS	BY

REVISIONS

CASCO BAY STEEL STRUCTURES
ONE WALLACE AVENUE
SOUTH PORTLAND, ME 04106
PHONE: 207-780-6722
FAX: 207-780-6726

STRUCTURE: BENMONT AVE. (TH-7) (URBAN MINOR ARTERIAL)
LOCATION: TOWN OF BENNINGTON, VERMONT
PROJECT NO.: BRIDGE NO. 57 PROJECT NO. BRF 1000(16)
ENGINEER: STATE OF VERMONT AGENCY OF TRANSPORTATION
CUSTOMER: ALPINE CONSTRUCTION
ITEM: DIAPHRAGMS
SURFACE PREP.: SSPC-SP10 OPEN HOLES: 13/16ø
PAINT: NONE

APPROVAL	DRAWN GDC 12-4-14	SHEET NO.	JOB NO.
SHOP	CHECKED FM 1-6-15	17	605

1411-12 DPH-1411A

Sheet 17 - Plotted: 01/09/2015 @ 08:40 (HEATHER)

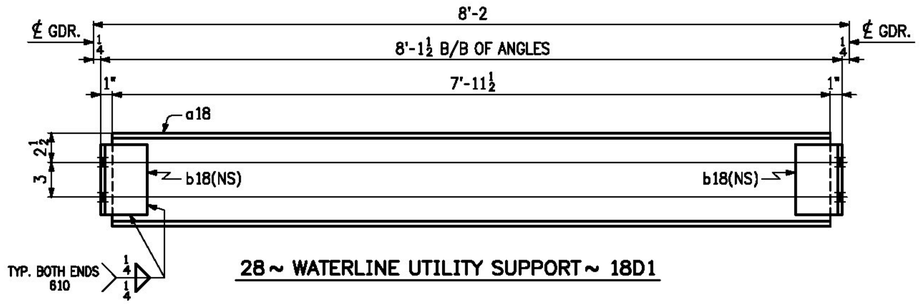

28 ~ WATERLINE UTILITY SUPPORT ~ 18D1

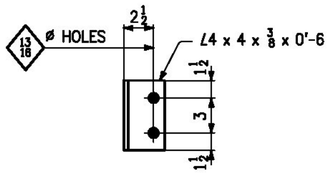

DETAIL OF b18

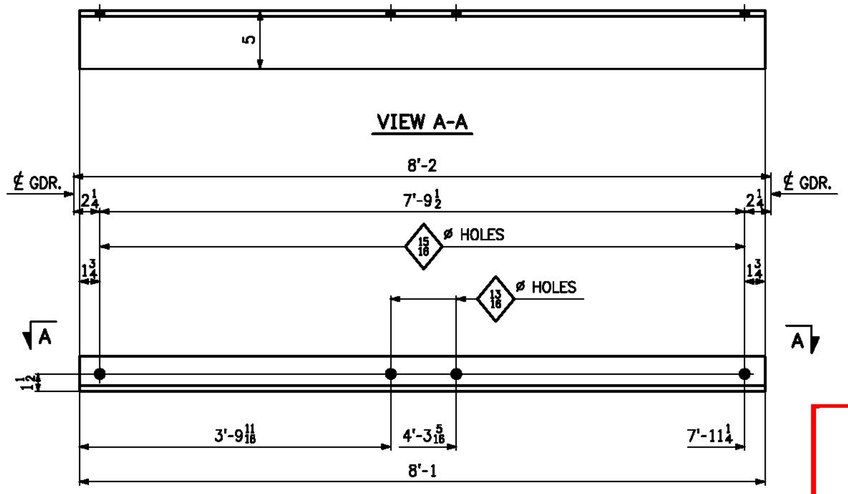

13 ~ 6" DUCT BANK SUPPORTS ~ 18D2

LINE	NO. OF PCS.	SHIP MARK	ASS'Y MARK	MATERIAL SHAPE	SECTION	LENGTH FT.	LENGTH IN.	MATERIAL SPEC.	ITEM NO.	REMARKS
1	28	18D1		WATERLINE UTILITY SUPPORTS						7182 lbs.
2	28		a18	W	8 x 31	7	11½	M270-50W	4/6	6908 lbs.
3	56		b18	L	4 x 4 x ⅜	0	6	M270-50W	4/7	274 lbs.
4										
5				DUCT BANK SUPPORTS						
6	13	18D2		L	5 x 3 x ⅜	8	1	M270-50W	4/5	1030 lbs.
7										
8										
9										
10										
11										
12										
13										
14										
15										
16										
17										
18										
19										
20										
21										
22										
23										
24										
25										

NOTES:

1. FOR GENERAL NOTES, SEE SHT. GN1.

T.Y. LIN INTERNATIONAL

THE STAMPED DOCUMENTS ARE HEREBY:

__X__ APPROVED
____ APPROVED AS NOTED
____ REVISE AND RESUBMIT

SEE TRANSMITTAL FOR ADDITIONAL INFORMATION AS APPLICABLE.

THIS REVIEW IS FOR GENERAL CONFORMANCE WITH DESIGN CONCEPT ONLY. ANY DEVIATION FROM THE PLANS OR SPECIFICATIONS NOT CLEARLY NOTED BY THE CONTRACTOR HAS NOT BEEN REVIEWED. REVIEW BY THE ENGINEER SHALL NOT RELIEVE THE CONTRACTOR OF THE CONTRACTUAL RESPONSIBILITY FOR ANY ERRORS OR DEVIATION FROM THE CONTRACT REQUIREMENTS.

RICK HEBERT — REVIEWER
2/2/2015 — DATE

NO.	DATE	REMARKS	BY
		REVISIONS	

CASCO BAY STEEL STRUCTURES
ONE WALLACE AVENUE
SOUTH PORTLAND, ME 04106
PHONE: 207-780-6722
FAX: 207-780-6726

STRUCTURE: BENMONT AVE. (TH-7) (URBAN MINOR ARTERIAL)
LOCATION: TOWN OF BENNINGTON, VERMONT
PROJECT NO.: BRIDGE NO. 57 PROJECT NO. BRF 1000(16)
ENGINEER: STATE OF VERMONT AGENCY OF TRANSPORTATION
CUSTOMER: ALPINE CONSTRUCTION
ITEM: UTILITY SUPPORTS
SURFACE PREP.: SSPC-SP10 OPEN HOLES: AS NOTED
PAINT: NONE

APPROVAL	DRAWN GDC 12-5-14	SHEET NO.	JOB NO.
SHOP	CHECKED PM 1-6-15	18	605

1411-12 UTILITY-1411A

Sheet 18 - Plotted: 01/08/2015 @ 08:40 (HEATHER)

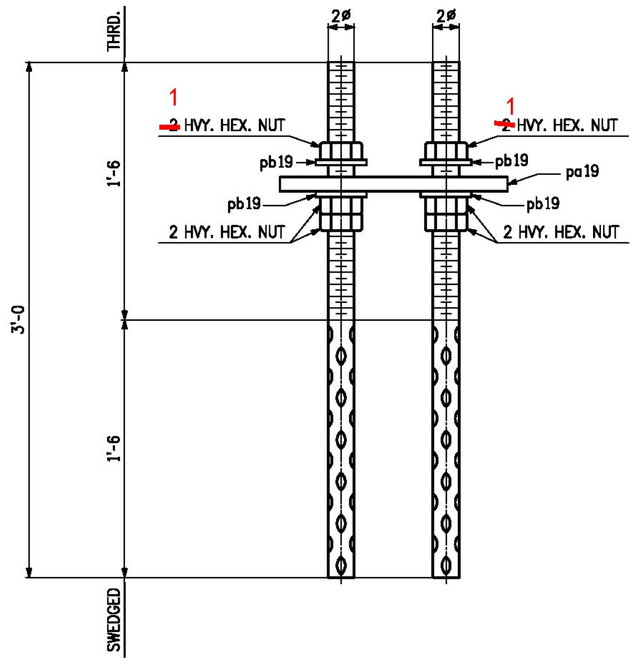

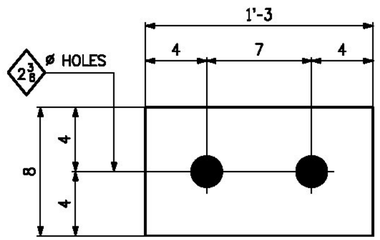

LEVELING PLATE DETAIL ~ pa19

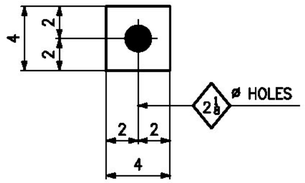

SQUARE WASHER DETAIL ~ pb19

LINE	NO. OF PCS.	SHIP MARK	ASS'Y MARK	MATERIAL SHAPE	SECTION	LENGTH FT.	LENGTH IN.	MATERIAL SPEC.	ITEM NO.	REMARKS
1	10	19AB		LEVELING ASSEMBLY						1379 lbs.
2	20			ROD	2ø	3	0	F1554-55	4/14	640 lbs.
3	60			NUT	2ø			A563M	4/15	180 lbs.
4	10		pa19	PL	1 3/8 x 8	1	3	M270-50W	4/17	468 lbs.
5	40		pb19	PL	1/2 x 4	0	4	M270-50W	4/16	91 lbs.
6										
7										
8										
9										
10										
11										
12										
13										
14										
15										
16										
17										
18										
19										
20										
21										
22										
23										
24										
25										

10 ~ LEVELING BOLT ASSEMBLIES ~ 19AB

(ABUT. 1 & 2)

NOTES:

1. FOR GENERAL NOTES, SEE SHT. GN1.

T.Y. LIN INTERNATIONAL

THE STAMPED DOCUMENTS ARE HEREBY:

____ APPROVED
__X__ APPROVED AS NOTED
____ REVISE AND RESUBMIT

SEE TRANSMITTAL FOR ADDITIONAL INFORMATION AS APPLICABLE.

THIS REVIEW IS FOR GENERAL CONFORMANCE WITH DESIGN CONCEPT ONLY. ANY DEVIATION FROM THE PLANS OR SPECIFICATIONS NOT CLEARLY NOTED BY THE CONTRACTOR HAS NOT BEEN REVIEWED. REVIEW BY THE ENGINEER SHALL NOT RELIEVE THE CONTRACTOR OF THE CONTRACTUAL RESPONSIBILITY FOR ANY ERRORS OR DEVIATION FROM THE CONTRACT REQUIREMENTS.

RICK HEBERT — REVIEWER
2/2/2015 — DATE

NO.	DATE	REMARKS	BY

REVISIONS

CASCO BAY STEEL STRUCTURES
ONE WALLACE AVENUE
SOUTH PORTLAND, ME 04106
PHONE: 207-780-6722
FAX: 207-780-6726

STRUCTURE	BENMONT AVE. (TH-7) (URBAN MINOR ARTERIAL)
LOCATION	TOWN OF BENNINGTON, VERMONT
PROJECT NO.	BRIDGE NO. 57 PROJECT NO. BRF 1000(16)
ENGINEER	STATE OF VERMONT AGENCY OF TRANSPORTATION
CUSTOMER	ALPINE CONSTRUCTION
ITEM	GIRDER LEVELING ASSEMBLY
SURFACE PREP.	____ OPEN HOLES AS NOTED
PAINT	NONE

APPROVAL	DRAWN	MAY	12-9-14	SHEET NO. 19
SHOP	CHECKED	GDC	12-10-14	JOB NO. 605

1411-8

BRG-1411

Sheet 19 - Plotted: 01/08/2015 @ 08:41 [HEATHERI]

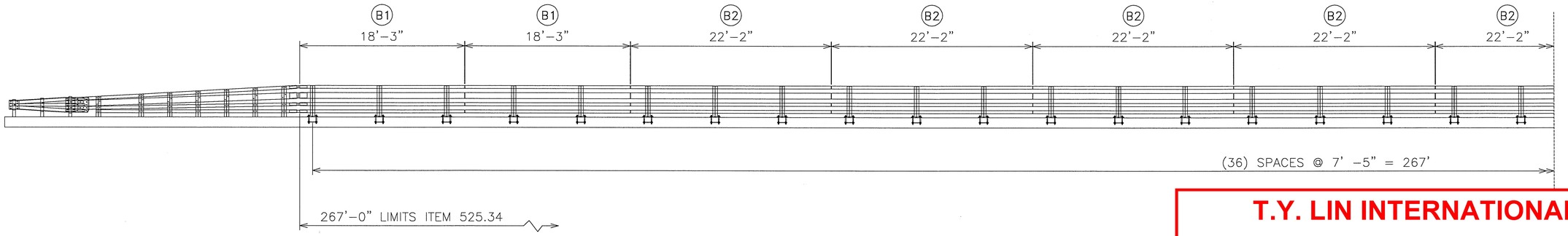

B.I.N. 57

TYPICAL RAILING ELEVATION

LOOKING AT FACE OF RAIL FROM CENTERLINE OF ROAD

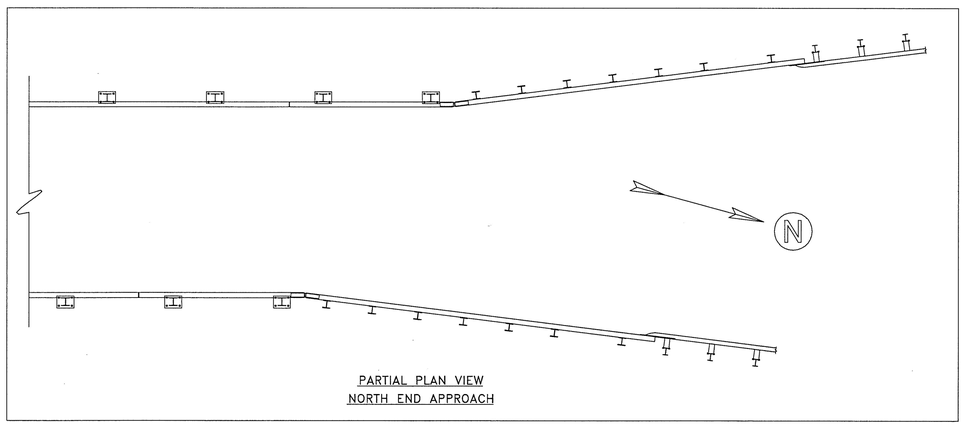

PARTIAL PLAN VIEW
NORTH END APPROACH

REVISIONS		
No.	Remarks	Date
RevA	Notation Corrections	3/24/15
0	Initial submittal	3/2/15

T.Y. LIN INTERNATIONAL

THE STAMPED DOCUMENTS ARE HEREBY:

____ APPROVED
__X__ APPROVED AS NOTED
____ REVISE AND RESUBMIT

SEE TRANSMITTAL FOR ADDITIONAL INFORMATION AS APPLICABLE.

THIS REVIEW IS FOR GENERAL CONFORMANCE WITH DESIGN CONCEPT ONLY. ANY DEVIATION FROM THE PLANS OR SPECIFICATIONS NOT CLEARLY NOTED BY THE CONTRACTOR HAS NOT BEEN REVIEWED. REVIEW BY THE ENGINEER SHALL NOT RELIEVE THE CONTRACTOR OF THE CONTRACTUAL RESPONSIBILITY FOR ANY ERRORS OR DEVIATION FROM THE CONTRACT REQUIREMENTS.

RICK HEBERT — REVIEWER
3/30/2015 — DATE

HIGHWAY SAFETY CORP
GLASTONBURY, CT
860–633–9445

ITEM 525.34 4–BAR BRIDGE RAIL
BRIDGE IMPROVEMENT
BENMONT AVE. (TH–7) (URBAN MINOR ARTERIAL)
B.I.N. 57 P.I.N. BRF 1000 (16)
TOWN OF BENNINGTON, BENNINGTON COUNTY

AISC CERTIFIED FABRICATOR

HSC JOB NO. 2026

GENERAL CONTRACTOR

SUB CONTRACTOR: LAFAYETTE

SHEET NO. 1 of 6

DRAWN	CHECKED	DATE	SCALE	SIZE
MKT		2–17–15	NONE	D

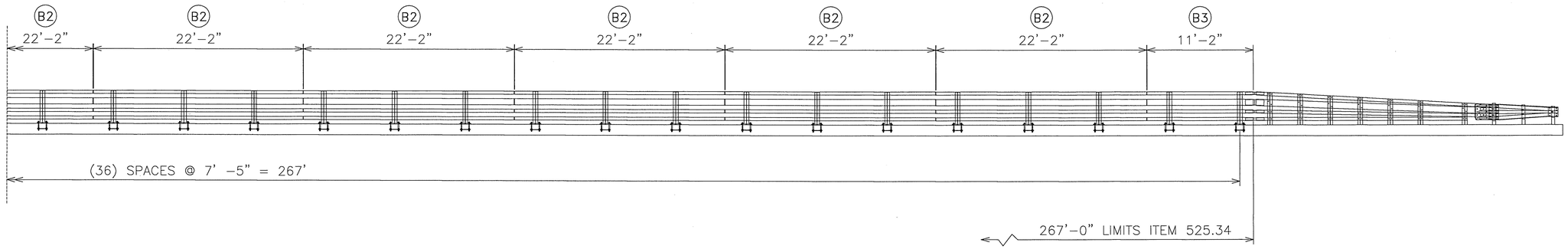

B.I.N. 57

TYPICAL RAILING ELEVATION

LOOKING AT FACE OF RAIL FROM CENTERLINE OF ROAD

T.Y. LIN INTERNATIONAL

THE STAMPED DOCUMENTS ARE HEREBY:

____ APPROVED
__X__ APPROVED AS NOTED
____ REVISE AND RESUBMIT

SEE TRANSMITTAL FOR ADDITIONAL INFORMATION AS APPLICABLE.

THIS REVIEW IS FOR GENERAL CONFORMANCE WITH DESIGN CONCEPT ONLY. ANY DEVIATION FROM THE PLANS OR SPECIFICATIONS NOT CLEARLY NOTED BY THE CONTRACTOR HAS NOT BEEN REVIEWED. REVIEW BY THE ENGINEER SHALL NOT RELIEVE THE CONTRACTOR OF THE CONTRACTUAL RESPONSIBILITY FOR ANY ERRORS OR DEVIATION FROM THE CONTRACT REQUIREMENTS.

RICK HEBERT — REVIEWER
3/30/2015 — DATE

HIGHWAY SAFETY CORP
GLASTONBURY, CT
860–633–9445

ITEM 525.34 4–BAR BRIDGE RAIL
BRIDGE IMPROVEMENT
BENMONT AVE. OVER ROARING BRANCH RIVER
B.I.N. 57 P.I.N. BRF 1000 (16)
TOWN OF BENNINGTON, BENNINGTON COUNTY

AISC CERTIFIED FABRICATOR

HSC JOB NO. 2026

GENERAL CONTRACTOR

SUB CONTRACTOR LAFAYETTE

SHEET NO. 2 of 6

DRAWN	CHECKED	DATE	SCALE	SIZE
MKT		2–17–15	NONE	D

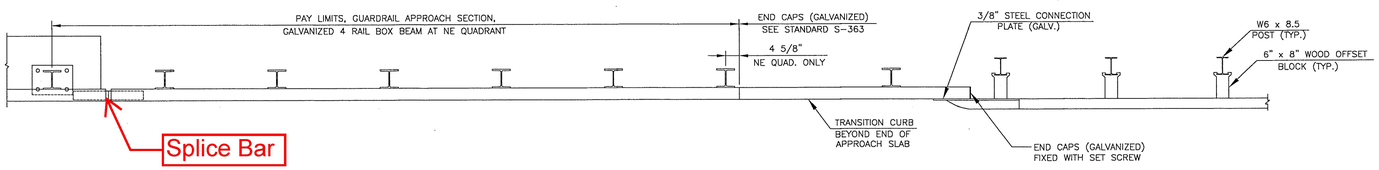

PLAN VIEW – APPROACH RAIL

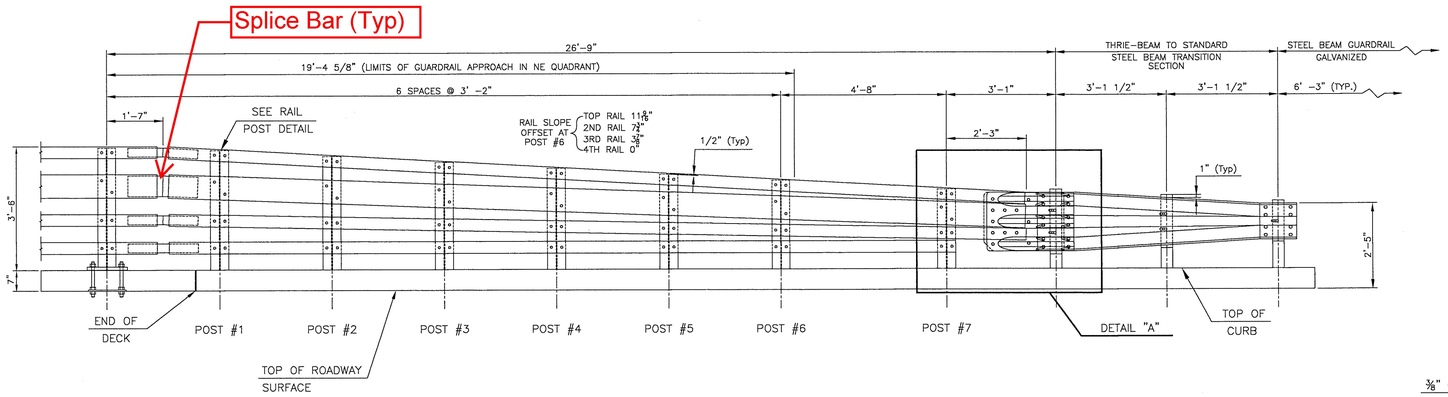

ELEVATION VIEW – NE & SE APPROACH RAIL

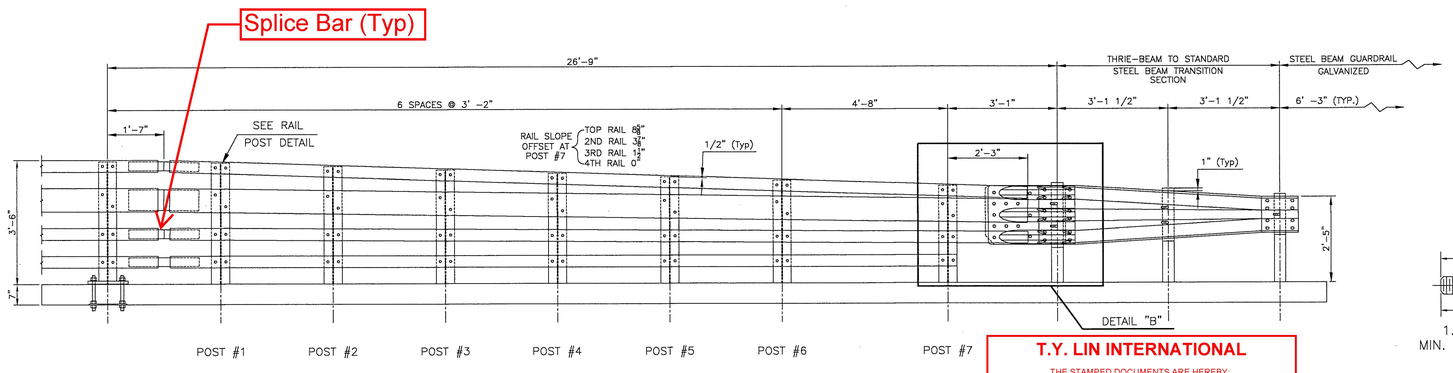

ELEVATION VIEW – NW & SW APPROACH RAIL

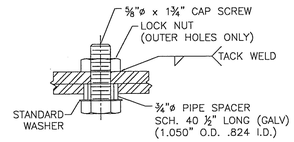

SPLICE BOLT
SECTION

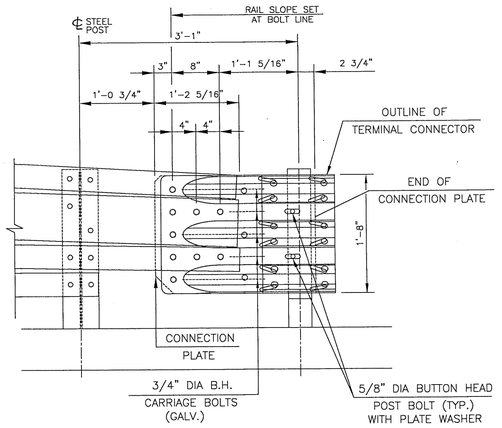

DETAIL A

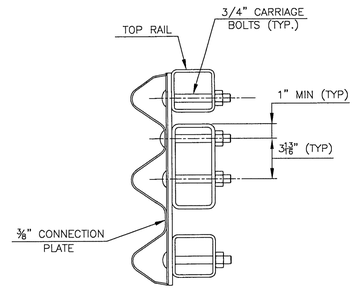

SECTION C–C
CONNECTION PLATE

DETAIL B

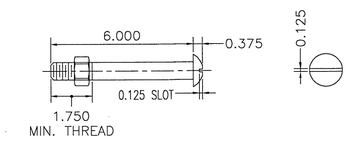

3/4" DIA. A449
ROUND HEAD BOLT

(WITH WASHER AND PREVAILING TORQUE TYPE LOCK NUT)
(SEE NOTE #8)
ONLY FULL DIAMETER BODY BOLTS WILL BE ALLOWED.

T.Y. LIN INTERNATIONAL

THE STAMPED DOCUMENTS ARE HEREBY:

____ APPROVED
X APPROVED AS NOTED
____ REVISE AND RESUBMIT

SEE TRANSMITTAL FOR ADDITIONAL INFORMATION AS APPLICABLE.

THIS REVIEW IS FOR GENERAL CONFORMANCE WITH DESIGN CONCEPT ONLY. ANY DEVIATION FROM THE PLANS OR SPECIFICATIONS NOT CLEARLY NOTED BY THE CONTRACTOR HAS NOT BEEN REVIEWED. REVIEW BY THE ENGINEER SHALL NOT RELIEVE THE CONTRACTOR OF THE CONTRACTUAL RESPONSIBILITY FOR ANY ERRORS OR DEVIATION FROM THE CONTRACT REQUIREMENTS.

RICK HEBERT — REVIEWER
3/30/2015 — DATE

NOTES:

1. PAYMENT FOR GUARDRAIL APPROACH SECTION, GALVANIZED 4 RAIL BOX BEAM SHALL INCLUDE THE TERMINAL CONNECTOR, THE CONNECTION PLATE, RAIL, POSTS, BLOCKS AND ATTACHMENT HARDWARE.

2. ALL BRIDGE APPROACH RAIL MATERIALS, DIMENSIONS, SIZES, AND NOTES SHALL BE THE SHAME AS THOSE OF THE BRIDGE RAIL UNLESS OTHERWISE NOTED.

3. APPROACH RAIL BOLTS SHALL BE ASTM A307 GRADE A AND NUTS SHALL BE AASHTO M291 (ASTM A563 GRADE A OR BETTER) (GALVANIZED). WASHERS SHALL BE ASTM F844

4. FABRICATE SPLICE BARS TO MATCH BEND ANGLES USING A COMPLETE PENETRATION (B-U2) WELDED SPLICE AT CENTERLINE OF RAIL EXPANSION JOINT. NORTH APPROACH SPLICES ALSO BEND IN PLAN; REFER TO DETAIL SHEET FOR BEND ANGLES.

LEGEND:

NW	NORTH WEST
NE	NORTH EAST
SW	SOUTH WEST
SE	SOUTH EAST

HIGHWAY SAFETY CORP
GLASTONBURY, CT
860-633-9445

ITEM 525.34 4-BAR BRIDGE RAIL
BRIDGE IMPROVEMENT
BENMONT AVE. OVER ROARING BRANCH RIVER
B.I.N. 57 P.I.N. BRF 1000 (16)
TOWN OF BENNINGTON, BENNINGTON COUNTY

MSC CERTIFIED FABRICATOR

HSC JOB NO. 2026

GENERAL CONTRACTOR

SUB CONTRACTOR LAFAYETTE

SHEET NO. 3 of 6

DRAWN	CHECKED	DATE	SCALE	SIZE
MKT		2-17-15	NONE	D

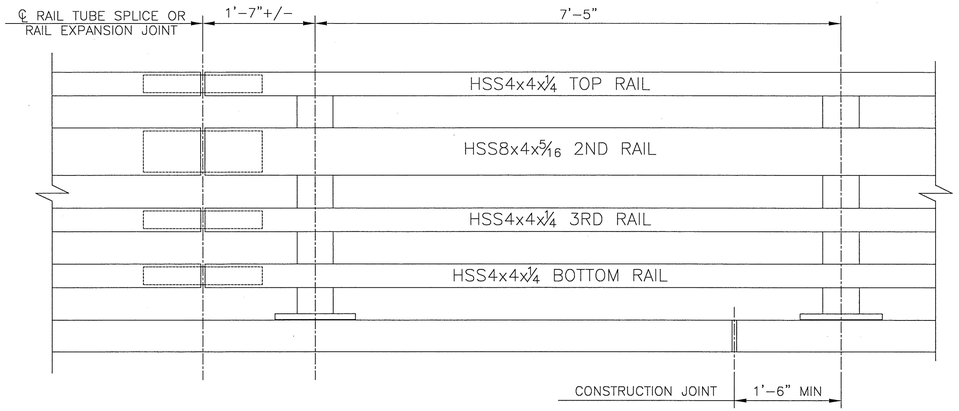

BRIDGE RAILING ELEVATION

T.Y. LIN INTERNATIONAL

THE STAMPED DOCUMENTS ARE HEREBY:

___ APPROVED
_X_ APPROVED AS NOTED
___ REVISE AND RESUBMIT

SEE TRANSMITTAL FOR ADDITIONAL INFORMATION AS APPLICABLE.

THIS REVIEW IS FOR GENERAL CONFORMANCE WITH DESIGN CONCEPT ONLY. ANY DEVIATION FROM THE PLANS OR SPECIFICATIONS NOT CLEARLY NOTED BY THE CONTRACTOR HAS NOT BEEN REVIEWED. REVIEW BY THE ENGINEER SHALL NOT RELIEVE THE CONTRACTOR OF THE CONTRACTUAL RESPONSIBILITY FOR ANY ERRORS OR DEVIATION FROM THE CONTRACT REQUIREMENTS.

RICK HEBERT — REVIEWER
3/30/2015 — DATE

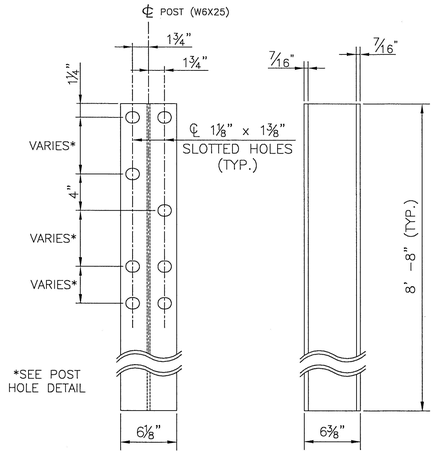

RAIL POST
(NOT TO SCALE)

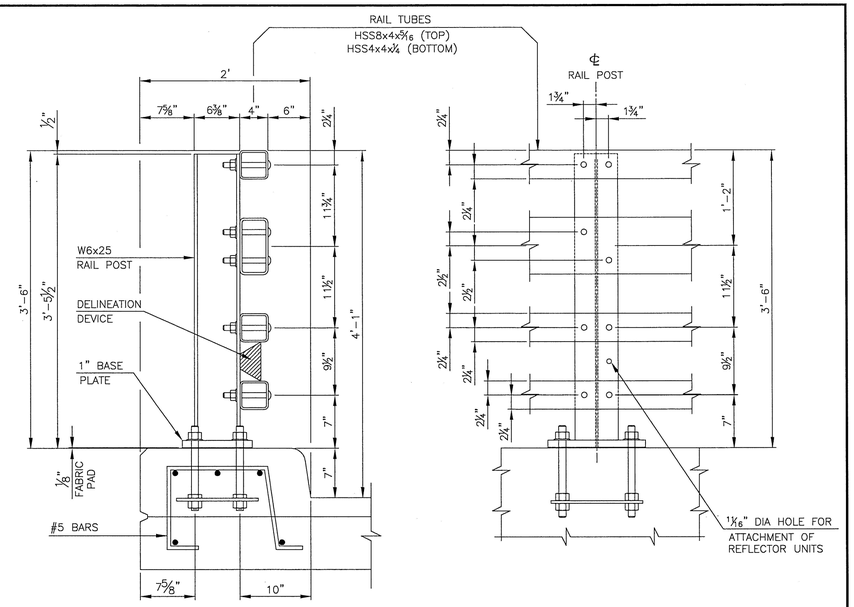

TYPICAL SECTION

PARTIAL RAIL ELEVATION

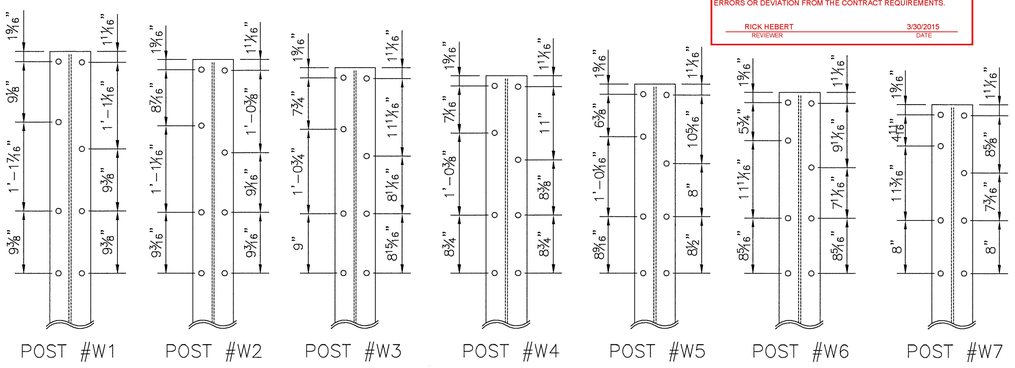

WEST APPROACH POST HOLE DETAIL

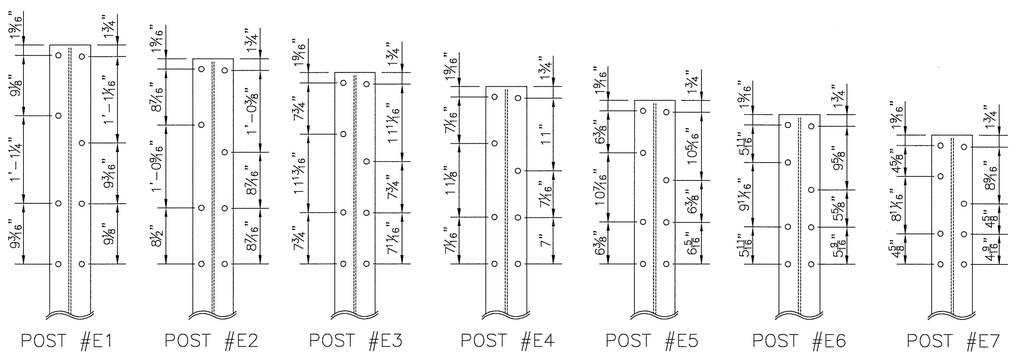

EAST APPROACH POST HOLE DETAIL

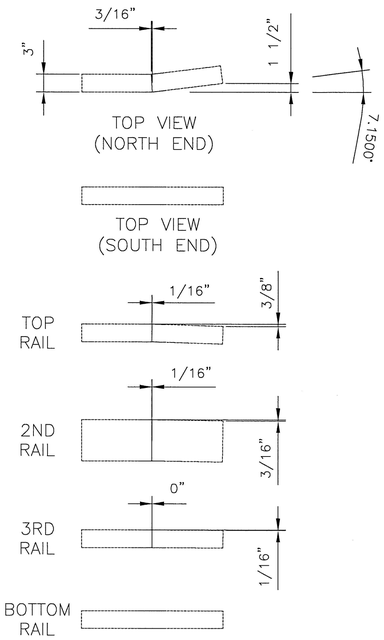

WEST APPROACH
SPLICE TUBES

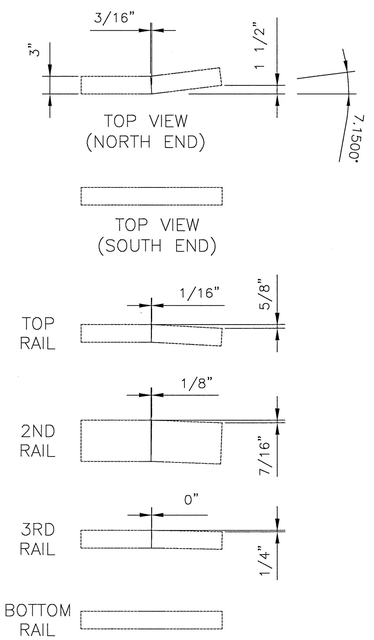

EAST APPROACH
SPLICE TUBES

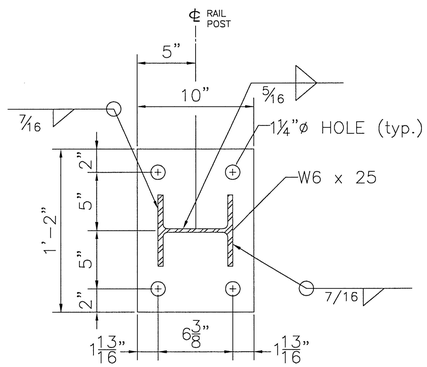

POST BASE PLATE
1" x 10" x 14" BASE PLATE

NOTE:

BEARING PAD TO HAVE SAME SHAPE AND DIMENSIONS AS BASE PLATE.

HIGHWAY SAFETY CORP
GLASTONBURY, CT
860-633-9445

ITEM 525.34 4-BAR BRIDGE RAIL
BRIDGE IMPROVEMENT
BENMONT AVE. OVER ROARING BRANCH RIVER
B.I.N. 57 P.I.N. BRF 1000 (16)
TOWN OF BENNINGTON, BENNINGTON COUNTY

AISC CERTIFIED FABRICATOR

HSC JOB NO. 2026

GENERAL CONTRACTOR

SUB CONTRACTOR: LAFAYETTE

SHEET NO. 4 of 6

DRAWN	CHECKED	DATE	SCALE	SIZE
MKT		2-17-15	NONE	D

BILL OF MATERIAL

EAST RAIL APPROACH

QUANTITY = 2

NE	SE	mk	Description	Spec.
1	1	**E1**	END POST W6x25 8'-8" OAH (GALV)	A572 gr 50
1	1	**E2**	END POST W6x25 8'-8" OAH (GALV)	A572 gr 50
1	1	**E3**	END POST W6x25 8'-8" OAH (GALV)	A572 gr 50
1	1	**E4**	END POST W6x25 8'-8" OAH (GALV)	A572 gr 50
1	1	**E5**	END POST W6x25 8'-8" OAH (GALV)	A572 gr 50
1	1	**E6**	END POST W6x25 8'-8" OAH (GALV)	A572 gr 50
1	1	**E7**	END POST W6x25 8'-8" OAH (GALV)	A572 gr 50
0	1		SPLICE TUBE FOR 4x4 RAIL (GALV) angled TS 3x3x5/16 1'-11.750" LG w/ 2 WELDED NUTS	A500 gr B
0	1		SPLICE TUBE FOR 8x4 RAIL (GALV) angled TS 7x3x3/8 1'-11.750" LG w/ 2 WELDED NUTS	A500 gr B
0	1		SPLICE TUBE FOR 4x4 RAIL (GALV) angled TS 3x3x5/16 1'-11.750" LG w/ 2 WELDED NUTS	A500 gr B
0	1		SPLICE TUBE FOR 4x4 RAIL (GALV) angled TS 3x3x5/16 1'-11.750" LG w/ 2 WELDED NUTS	A500 gr B
1	0		SPLICE TUBE FOR TOP 4x4 RAIL (GALV) double angled TS 3x3x5/16 1'-11.750" LG w/ 2 WELDED NUTS	A500 gr B
1	0		SPLICE TUBE FOR 8x4 RAIL (GALV) double angled TS 7x3x3/8 1'-11.750" LG w/ 2 WELDED NUTS	A500 gr B
1	0		SPLICE TUBE FOR 3RD 4x4 RAIL (GALV) double angled TS 3x3x5/16 1'-11.750" LG w/ 2 WELDED NUTS	A500 gr B
1	0		SPLICE TUBE FOR BOTTOM 4x4 RAIL (GALV) angled TS 3x3x5/16 1'-11.750" LG w/ 2 WELDED NUTS	A500 gr B
1	1		UPPER RAIL APPROACH TUBE HSS 4 x 4 x 1/25 x 24'-2" w/ 3.500 SLOTS FOR 4" EXP GAP (GALV)	A500 gr B
1	1		UPPER MIDDLE RAIL APPROACH TUBE HSS 8 x 4 x 5/16 x 24'-2.000" (GALV)	A500 gr B
1	1		LOWER MIDDLE RAIL APPROACH 4 x 4 x 1/25 x 24'-2" (Galv)	A500 gr B
1	1		LOWER RAIL APPROACH TUBE HSS 4 x 4 x 5/16 x 22'-2.000" w/ 3.500 SLOTS FOR 4" EXP GAP (GALV)	A500 gr B
1	1		BACK PLATE	A36
1	1		END CAP 3/16"x4"x8" w/ 4x 1"x1"x.125" TABS (GALV)	A36
3	3		END CAP 3/16"x4"x4" w/ 4x 1"x1"x.125" TABS (GALV)	A36
1	1		THRIE POST W6x8.5# x 7'-0" (GALV)	A572, Gr 50
1	1		TRANSITION POST W6x8.5# x 7'-0" (GALV)	A572, Gr 50
1	1		STANDARD POST W6x8.5# x 7'-0" (GALV)	A572, Gr 50
1	1		WOOD BLOCK 6" X 8" X 21.5" OFFSET ROUTED	WOOD
1	1		WOOD BLOCK THRIE 6" X 8" X 18" ROUTED FOR TRANSITION POST	WOOD
1	1		WOOD BLOCK 6" X 8" X 14" ROUTED	WOOD
1	1		TERMINAL CONNECTOR 10 Ga. (with slotted holes)	M180 B2
1	1		THRIE TRANSITION PANEL 10 Ga.	M180 B2
32	32		3/4" SLOTTED HEAD BOLT (GALV.) 0.75" DIA. X 6.00" LG. NO SHLDR	A325
20	20		5/8" GUARDRAIL SPLICE BOLT (GALV.) 0.625" DIA. X 1.750" LG. W/ NUT	A307
16	16		3/4" SPACER PIPE 0.750" DIA. (SCH 40) X 0.5" LG.	A53 gr B
64	64		3/4" HEAVY HEX NUT (GALV.) 0.750" DIA.	A563 DH
20	20		5/8" DBL. RECESSED NUT (GALV.) 0.625" DIA.	A563 DH
1	1		3/4" ROUND HEAD BOLT (GALV.) 0.750" DIA. X 2.000" LG.	A307
6	6		POST BOLT 0.625" x 11" x 9.5" HDG (5/8)	A307

WEST RAIL APPROACH

QUANTITY = 2

NW	SW	mk	Description	Spec.
1	1	**W1**	END POST W6x25 8'-8" OAH (GALV)	A572 gr 50
1	1	**W2**	END POST W6x25 8'-8" OAH (GALV)	A572 gr 50
1	1	**W3**	END POST W6x25 8'-8" OAH (GALV)	A572 gr 50
1	1	**W4**	END POST W6x25 8'-8" OAH (GALV)	A572 gr 50
1	1	**W5**	END POST W6x25 8'-8" OAH (GALV)	A572 gr 50
1	1	**W6**	END POST W6x25 8'-8" OAH (GALV)	A572 gr 50
1	1	**W7**	END POST W6x25 8'-8" OAH (GALV)	A572 gr 50
0	1		SPLICE TUBE FOR 4x4 RAIL (GALV) angled TS 3x3x5/16 1'-11.750" LG w/ 2 WELDED NUTS	A500 gr B
0	1		SPLICE TUBE FOR 8x4 RAIL (GALV) angled TS 7x3x3/8 1'-11.750" LG w/ 2 WELDED NUTS	A500 gr B
0	1		SPLICE TUBE FOR 4x4 RAIL (GALV) angled TS 3x3x5/16 1'-11.750" LG w/ 2 WELDED NUTS	A500 gr B
0	1		SPLICE TUBE FOR 4x4 RAIL (GALV) angled TS 3x3x5/16 1'-11.750" LG w/ 2 WELDED NUTS	A500 gr B
1	0		SPLICE TUBE FOR TOP 4x4 RAIL (GALV) double angled TS 3x3x5/16 1'-11.750" LG w/ 2 WELDED NUTS	A500 gr B
1	0		SPLICE TUBE FOR 8x4 RAIL (GALV) double angled TS 7x3x3/8 1'-11.750" LG w/ 2 WELDED NUTS	A500 gr B
1	0		SPLICE TUBE FOR 3RD 4x4 RAIL (GALV) double angled TS 3x3x5/16 1'-11.750" LG w/ 2 WELDED NUTS	A500 gr B
1	0		SPLICE TUBE FOR BOTTOM 4x4 RAIL (GALV) angled TS 3x3x5/16 1'-11.750" LG w/ 2 WELDED NUTS	A500 gr B
1	1		UPPER RAIL APPROACH TUBE HSS 4 x 4 x 1/25 x 9'-4.000" w/ 3.500 SLOTS FOR 4" EXP GAP (GALV)	A500 gr B
1	1		UPPER MIDDLE RAIL APPROACH TUBE HSS 8 x 4 x 5/16 x 9'-4.000" (GALV)	A500 gr B
1	1		LOWER MIDDLE RAIL APPROACH 4 x 4 x 1/25 (Galv)	A500 gr B
1	1		LOWER RAIL APPROACH TUBE HSS 4 x 4 x 5/16 x 22'-2.000" w/ 3.500 SLOTS FOR 4" EXP GAP (GALV)	A500 gr B
1	1		BACK PLATE	A36
1	1		END CAP 3/16"x4"x8" w/ 4x 1"x1"x.125" TABS (GALV)	A36
3	3		END CAP 3/16"x4"x4" w/ 4x 1"x1"x.125" TABS (GALV)	A36
1	1		THRIE POST W6x8.5# x 7'-0" (GALV)	A572, Gr 50
1	1		TRANSITION POST W6x8.5# x 7'-0" (GALV)	A572, Gr 50
1	1		STANDARD POST W6x8.5# x 7'-0" (GALV)	A572, Gr 50
1	1		WOOD BLOCK 6" X 8" X 21.5" OFFSET ROUTED	WOOD
1	1		WOOD BLOCK THRIE 6" X 8" X 18" ROUTED FOR TRANSITION POST	WOOD
1	1		WOOD BLOCK 6" X 8" X 14" ROUTED	WOOD
1	1		TERMINAL CONNECTOR 10 Ga. (with slotted holes)	M180 B2
1	1		THRIE TRANSITION PANEL 10 Ga.	M180 B2
31	31		3/4" SLOTTED HEAD BOLT (GALV.) 0.75" DIA. X 6.00" LG. NO SHLDR	A325
20	20		5/8" GUARDRAIL SPLICE BOLT (GALV.) 0.625" DIA. X 1.750" LG. W/ NUT	A307
16	16		3/4" SPACER PIPE 0.750" DIA. (SCH 40) X 0.5" LG.	A53 gr B
64	64		3/4" HEAVY HEX NUT (GALV.) 0.750" DIA.	A563 DH
20	20		5/8" DBL. RECESSED NUT (GALV.) 0.625" DIA.	A563 DH
3	3		3/4" ROUND HEAD BOLT (GALV.) 0.750" DIA. X 2.000" LG.	A307
6	6		POST BOLT 0.625" x 11" x 9.5" HDG (5/8)	A307

4 RAIL

TOTAL PAY LENGTH ITEM 525.34 = 534 LF

W	E	mk	Description	Spec.
37	37		PED POST W6 x 25 x 3'-6" OAH WITH 1"x10"x14" BASE PLATE (GLV)	A572 gr 50
36	36		SPLICE TUBE FOR 4x4 RAIL (GALV) TS 3x3x5/16 0'-0" LG w/ 2 WELDED NUTS	A500 gr B
12	12		SPLICE TUBE FOR 8x4 RAIL (GALV) TS 7x3x3/8 0'-0" LG w/ 2 WELDED NUTS	A500 gr B
6	6	**B1**	TUBULAR STEEL RAIL (GLV) HSS 4 x 4 x 1/4 x 18'-3" OAL	A500 gr B
30	30	**B2**	TUBULAR STEEL RAIL (GLV) HSS 4 x 4 x 1/4 x 22'-2" OAL	A500 gr B
3	3	**B3**	TUBULAR STEEL RAIL (GLV) HSS 4 x 4 x 1/4 x 11'-2" OAL	A500 gr B
2	2	**B1**	TUBULAR STEEL RAIL (GLV) HSS 8 x 4 x 5/16 x 18'-3" OAL	A500 gr B
10	10	**B2**	TUBULAR STEEL RAIL (GLV) HSS 8 x 4 x 5/16 x 22'-2" OAL	A500 gr B
1	1	**B3**	TUBULAR STEEL RAIL (GLV) HSS 8 x 4 x 5/16 x 11'-2" OAL	A500 gr B
37	37		BR NEOPRENE PAD 0.125 x 10.00 x 14.00	neoprene
37	37		ANCHOR PLATE (GALV) PL .375 x 9.375 x 13.000 w/ 6.250 DIA. CTR HOLE	A36
148	148		ANCHOR STUD 1" DIA. x 12" LG. (GALV)	A449
296	296		HEAVY HEX NUT 1" DIA. (GALV)	A563 DH
148	148		JAMB NUTS 1" DIA. (GALV)	A563 DH
148	148		STANDARD WASHER 1" DIA.	F436
192	192		5/8" HEX HEAD BOLT (GALV.) 0.625" DIA. X 1.750" LG.	A325
296	296		3/4" ROUND HEAD BOLT (GALV.) 0.750" DIA. X 6.000" LG. NO SHLDR W/ TYPE A WASHER	A325
296	296		3/4" HEAVY HEX NUT (GALV.) 1" DIA.	A563 DH
74	74		5/8" HEX HEAD BOLT (GALV.) 0.625" DIA. X 5.5" LG. w/ 2 NUTS & 1 STANDARD WASHER	A325
96	96		5/8" GUARDRAIL SPLICE BOLT (GALV.) 0.625" DIA. X 1.750" LG. W/ NUT	A307

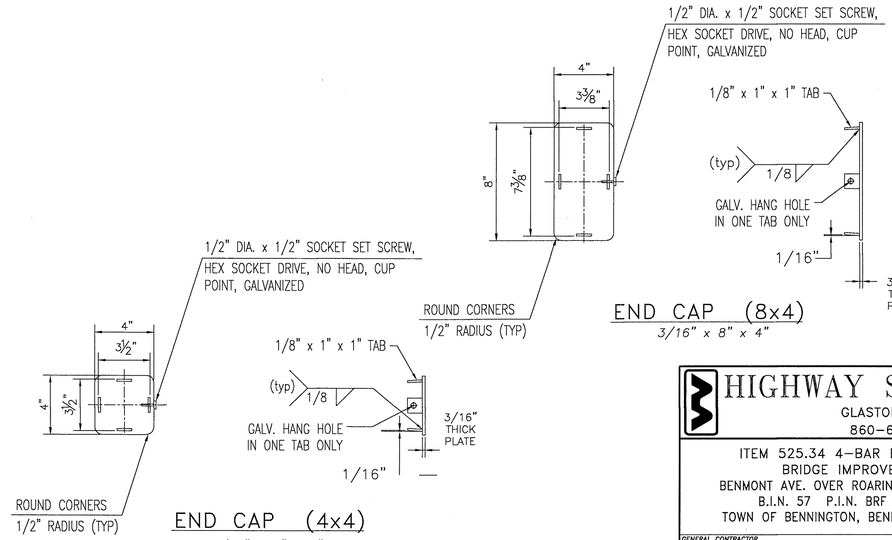

T.Y. LIN INTERNATIONAL

THE STAMPED DOCUMENTS ARE HEREBY:

____ APPROVED
__X__ APPROVED AS NOTED
____ REVISE AND RESUBMIT

SEE TRANSMITTAL FOR ADDITIONAL INFORMATION AS APPLICABLE.

THIS REVIEW IS FOR GENERAL CONFORMANCE WITH DESIGN CONCEPT ONLY. ANY DEVIATION FROM THE PLANS OR SPECIFICATIONS NOT CLEARLY NOTED BY THE CONTRACTOR HAS NOT BEEN REVIEWED. REVIEW BY THE ENGINEER SHALL NOT RELIEVE THE CONTRACTOR OF THE CONTRACTUAL RESPONSIBILITY FOR ANY ERRORS OR DEVIATION FROM THE CONTRACT REQUIREMENTS.

RICK HEBERT — REVIEWER
3/30/2015 — DATE

HIGHWAY SAFETY CORP
GLASTONBURY, CT
860-633-9445

ITEM 525.34 4-BAR BRIDGE RAIL
BRIDGE IMPROVEMENT
BENMONT AVE. OVER ROARING BRANCH RIVER
B.I.N. 57 P.I.N. BRF 1000 (16)
TOWN OF BENNINGTON, BENNINGTON COUNTY

AISC CERTIFIED FABRICATOR

GENERAL CONTRACTOR
SUB CONTRACTOR: LAFAYETTE

HSC JOB NO. 2026
SHEET NO. 5 of 6

DRAWN	CHECKED	DATE	SCALE	SIZE
MKT		2-17-15	NONE	D

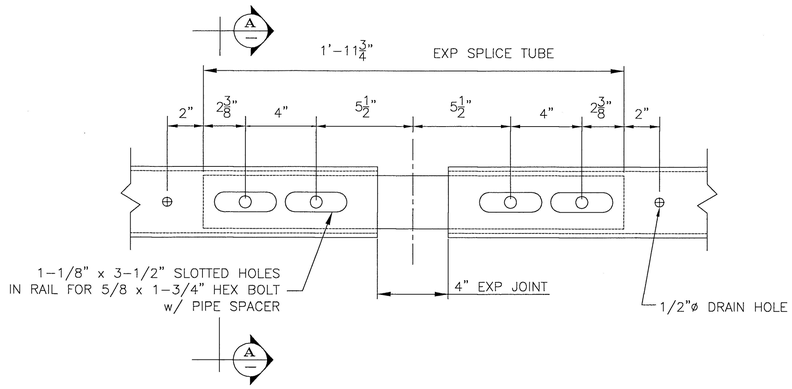

EXPANSION SPLICE DETAIL

BOTTOM VIEW

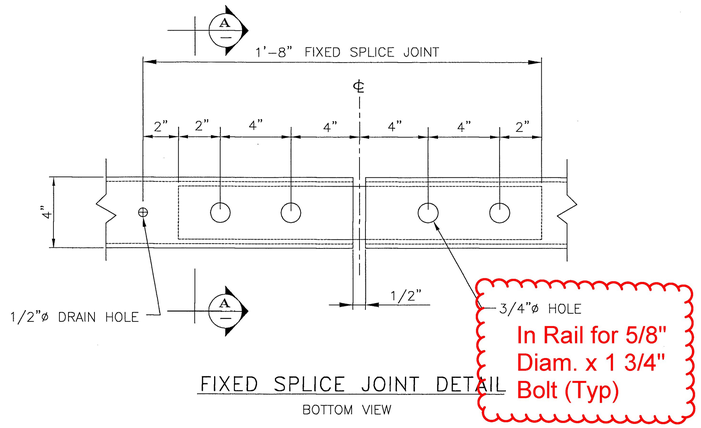

FIXED SPLICE JOINT DETAIL

BOTTOM VIEW

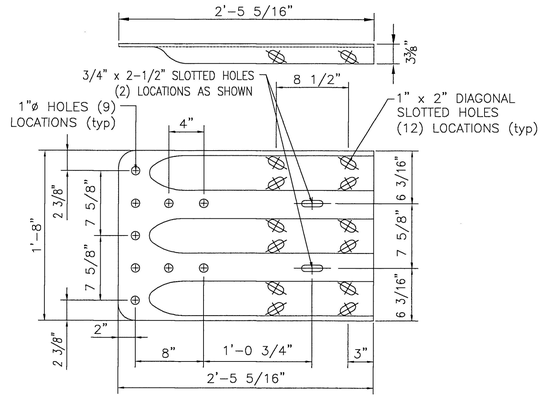

TERMINAL CONNECTOR

10 GAUGE (AASHTO M180 B2)

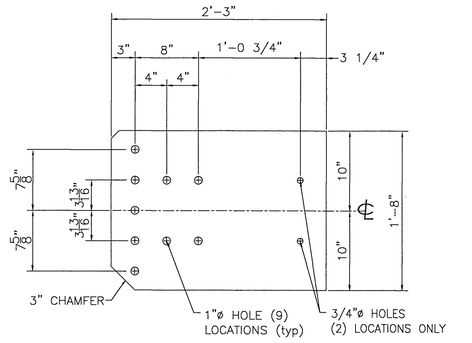

CONNECTION PLATE

3/8" x 1'-8" x 2'-3"

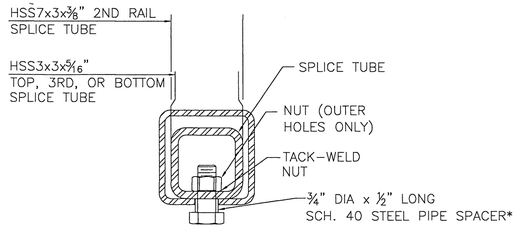

⅝" DIA TAPPED HOLE IN SPLICE TUBE
1⅛" x 3½" SLOT* OR ¾"ø HOLE**
IN RAIL TUBE FOR ⅝" DIA.
BOLT AND PLAIN HARDENED WASHER

A-A RAIL TUBE SPLICE AND RAIL EXPANSION JOINT SECTION

*EXPANSION JOINT
**SPLICE

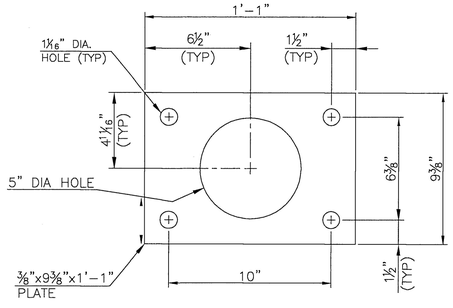

ANCHOR PLATE

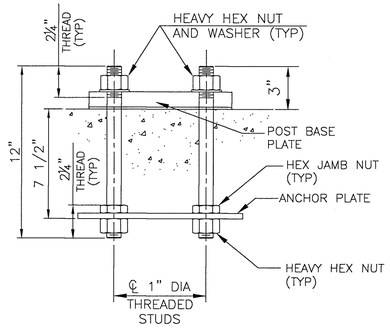

RAIL POST ANCHORAGE

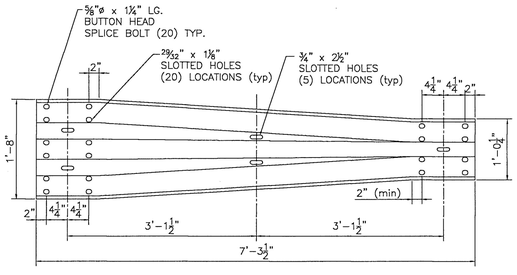

THRIE TRANSITION PANEL

10 GAUGE (AASHTO M180 B2)

NOTES:

1. ALL WORK AND MATERIALS SHALL CONFORM TO SECTION 525.
2. PRIOR TO GALVANIZING, ALL EXPOSED CUT OR SHEARED EDGES SHALL BE ROUNDED TO A 1/16" RADIUS AND BE FREE OF BURRS.
3. ALL POSTS SHALL BE SET NORMAL TO GRADE.
4. SECTIONS OF RAIL TUBE SHALL BE ATTACHED TO A MINIMUM OF TWO (2) RAIL POSTS AND PREFERABLY TO AT LEAST FOUR (4) POSTS.
5. RAIL TUBE EXPANSION JOINT SHALL BE PROVIDED IN ANY RAIL BAY SPANNING THE END OF AN INTEGRAL ABUTMENT BRIDGE AND AT ALL SUPERSTRUCTURE EXPANSION JOINTS. EXPANSION JOINT WIDTH SHALL BE 4" AT 45°F AND WILL BE ADJUSTED IN THE FIELD BY THE ENGINEER FOR OTHER TEMPERATURES.
6. HOLES IN RAILS FOR RAIL TUBE ATTACHMENT SHALL BE FIELD-DRILLED. HOLES SHALL BE COATED WITH AND APPROVED ZINC-RICH PAINT DURING INSTALLATION.
7. RAIL POST ANCHORING NUTS SHALL BE TIGHTENED TO A SNUG FIT AND GIVEN AN ADDITIONAL ONE-EIGHTH TURN.
8. RAIL TUBES SHALL BE ATTACHED USING 3/4" FULL DIAMETER BODY ASTM A449 ROUND HEAD BOLTS INSERTED THROUGH THE FACE OF THE TUBE. HOLES IN POSTS SHALL BE 1/16" LARGER THAN THE BOLT SIZE.
9. ANY BENDING OR CURVING OF RAIL SHALL BE DONE IN A FABRICATION PLANT IN ACCORDANCE WITH SUBMITTED PROCEDURES.
10. THE MINIMUM DISTANCE FROM A POST TO AN EXPANSION JOINT SHALL BE SUCH TO MAINTAIN MINIMUM EDGE DISTANCE OF 5" FROM ANY ANCHOR STUD TO THE END OF THE SLAB, OR TO THE EXPANSION JOINT RECESS POUR, IF ONE IS USED.
11. A DELINEATOR (SEE VAOT STANDARD DRAWING G-1 FOR DETAILS) SHALL BE INSTALLED AT NEAREST POST TO 30 FT SPACING. WHITE IS TO BE INSTALLED ON THE DRIVER'S RIGHT. FOR ONE WAY BRIDGES, YELLOW IS TO BE INSTALLED ON THE DRIVER'S LEFT. PAYMENT SHALL BE INCIDENTAL TO OTHER ITEMS.
12. THIS RAILING MEETS THE REQURIEMENTS FOR A TL-4 SERVICE LEVEL.

MATERIALS

RAIL TUBES.....ASTM A500 GRADE B OR ASTM A501
RAIL POSTS AND BASE PLATES.....ASTM A709/A709M, GRADE 50
ALL OTHER SHAPES AND PLATES.....ASTM A709/A709M, GARDE 36
ANCHOR STUDS.....ASTM A449
ALL OTHER BOLTS (UNLESS NOTED).....AASHTO M164, TYPE1

NUTS FOR AASHTO M164 BOLTS AND FOR ANCHOR STUDS SHALL COMPLY WITH AASTHO M291 (ASTM A563).

WASHERS SHALL COMPLY WITH AASHTO M293 (ASTM F436) SPECIFCATIONS.

1/8" PAD SHALL COMPLY WITH STANDARD SPECIFICATION SUBSECTION 731.01 OR 731.02.

RAIL POSTS AND BASE PLATES SHALL BE TESTED FOR IMPACT PROPERTIES IN ACCORDANCE WITH ASTM A370 CHARPY IMPACT TESTING USING TYPE A SPECIMEN.

T.Y. LIN INTERNATIONAL

THE STAMPED DOCUMENTS ARE HEREBY:

____ APPROVED
__X__ APPROVED AS NOTED
____ REVISE AND RESUBMIT

SEE TRANSMITTAL FOR ADDITIONAL INFORMATION AS APPLICABLE.

THIS REVIEW IS FOR GENERAL CONFORMANCE WITH DESIGN CONCEPT ONLY. ANY DEVIATION FROM THE PLANS OR SPECIFICATIONS NOT CLEARLY NOTED BY THE CONTRACTOR HAS NOT BEEN REVIEWED. REVIEW BY THE ENGINEER SHALL NOT RELIEVE THE CONTRACTOR OF THE CONTRACTUAL RESPONSIBILITY FOR ANY ERRORS OR DEVIATION FROM THE CONTRACT REQUIREMENTS.

RICK HEBERT — REVIEWER
3/30/2015 — DATE

HIGHWAY SAFETY CORP
GLASTONBURY, CT
860-633-9445

ITEM 525.34 4-BAR BRIDGE RAIL
BRIDGE IMPROVEMENT
BENMONT AVE. OVER ROARING BRANCH RIVER
B.I.N. 57 P.I.N. BRF 1000 (16)
TOWN OF BENNINGTON, BENNINGTON COUNTY

NSC CERTIFIED FABRICATOR

HSC JOB NO. 2026

GENERAL CONTRACTOR

SUB CONTRACTOR: LAFAYETTE

SHEET NO. 6 of 6

DRAWN	CHECKED	DATE	SCALE	SIZE
MKT		2-17-15	NONE	D

Highway Safety Corporation

Glastonbury, CT

Welding Procedure Specification

Material specification: A572 gr 50, A709 Gr 50

Welding process: Gas Metal Arc Welding (GMAW) Spray Transfer

Manual, semi-automatic, or automatic: Semi-Automatic

Position of welding: Flat (1F) or Horizontal (2F)

Filler metal specification: AWS A5.18

Filler metal classification: ER70S-6

Electrode and manufacturer: Lincoln Electric Lincoln Weld L-56

Flux and manufacturer: N/A

Shielding gas: 86% Argon / 14% CO2 Flow rate: 35-45 CFM

Single or multiple pass: Single or Multiple

Single or multiple arc: Single

Welding current: DCEP

Polarity: Reverse - electrode positive

Welding progression: Stringers

Root treatment: clean base metal

Preheat and interpass temperature: base metal up to 3/4" (50ºF) ; over 3/4 thru 1-1/2" (150ºF) : over 1-1/2" thru 2-1/2" (225ºF)

Postheat treatment: None

Electrode extension: 3/4" ± 1/4"

WELDING PROCEDURE

Weld size	Pass no.	Electrode size	Welding parameters		Travel speed	Joint detail
			Amperes	Volts		
5/16"	1	0.062"	300 A ± 30	29 V ± 2	15 ipm ± 2	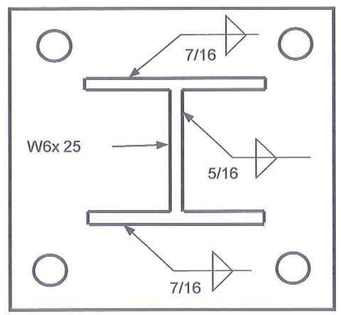
7/16"	1 & 2	0.062"	↓	↓	15 ipm ± 2	

This procedure may vary due to fabrication sequence, fit-up, pass size, etc. within the limitation of variables given in section 5 of latest edition AWS D1.5

Paul A Radice
CWI 98070221
QC1 EXP. 7/1/2016

WPS no. W-VTPEDPOST1

Revision no. 0

Supporting PQR no. Pre-Qualified

Project Name Bennington VT

Fabricator Highway Safety Corporation

Prepared By: Paul Radice

Date 03-02-15

Project Number BRF 1000 (16)

Highway Safety Corporation

Glastonbury, CT

Welding Procedure Specification

Material specification **ASTM A500 gr B**

Welding process **Gas Metal Arc Welding (GMAW)**

Manual, semi-automatic, or automatic **Semi-Automatic**

Position of welding **Flat (1F) or Horizontal (2F)**

Filler metal specification **AWS A5.18**

Filler metal classification **ER70S-6**

Electrode and manufacturer **Lincoln Electric Lincoln Weld L-56**

Flux and manufacturer **N/A**

Shielding gas **86% Argon / 14% CO2** Flow rate **35-45 CFM**

Single or multiple pass **Single**

Single or multiple arc **Single**

Welding current **DCEP**

Polarity **Reverse - electrode positive**

Welding progression **Stringers**

Root treatment **clean base metal**

Preheat and interpass temperature **base metal up to 3/4" (50ºF)**

Postheat treatment **None**

Electrode extension **3/4" ± 1/4"**

WELDING PROCEDURE

Weld size	Pass no.	Electrode size	Welding parameters		Travel speed	Joint detail
			Amperes	Volts		
	1	**0.063"**	**300 A ± 30**	**29 V ± 2**	**15 ipm ± 2**	B-U2a-GF 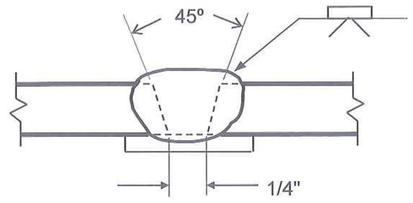

This procedure may vary due to fabrication sequence, fit-up, pass size, etc. within the limitation of variables given in section 5 of latest edition AWS D1.1

Paul A Radice
CWI 98070221
QC1 EXP. 7/1/2016

WPS no. **W-VGwBCK**

Revision no. **0**

Supporting PQR no. **Pre-Qualified**

Project Name **Bennington VT**

Fabricator **Highway Safety Corporation**

Prepared By: **Paul Radice**

Date **03-02-15**

Project Number **BRF 1000 (16)**

Assume proposing to measured from face of concrete, OK.

Should this be 2 @ approx. 9'-6 5/8" ?

Should this be 3 @ approx. 7'- 0" ?

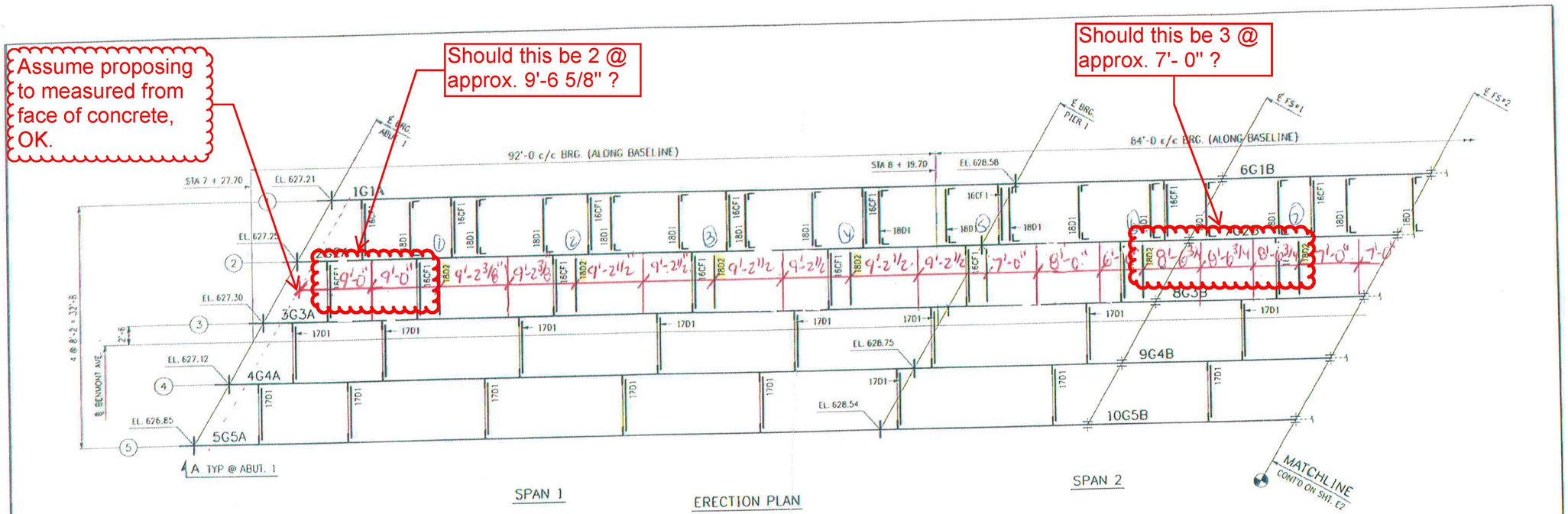

ERECTION PLAN

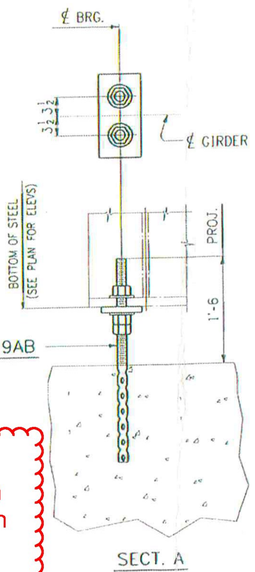

LEVELING BOLT ASSEMBLY ~ 19AB
(ABUT. 1 & 2)

SECT. A

CONTRACTOR NOTE:
ELEVATIONS ARE GIVEN TO BOTTOM OF STEEL - DO NOT POUR TO FINAL ELEVATIONS WITHOUT VERIFICATION OF BEARING HEIGHTS AND BRIDGE SEATS.

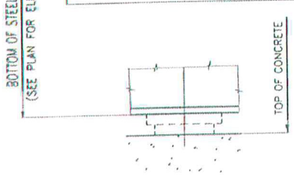

TYP. PIER ELEVATION

Ok with general spacings as indicated. Did find some minor discrepancies with summations for spacings in comparison to locations of utility supports shown in approved shop drawings. Just check/verify spacings as noted.

NOTES:

1. FOR GENERAL NOTES, SEE DWG. GN1.
2. ALL DIMENSIONS ARE GIVEN IN A HORIZONTAL PLANE.

T.Y. LIN INTERNATIONAL

THE STAMPED DOCUMENTS ARE HEREBY:

X APPROVED
___ APPROVED AS NOTED
___ REVISE AND RESUBMIT

SEE TRANSMITTAL FOR ADDITIONAL INFORMATION AS APPLICABLE.

THIS REVIEW IS FOR GENERAL CONFORMANCE WITH DESIGN CONCEPT ONLY. ANY DEVIATION FROM THE PLANS OR SPECIFICATIONS NOT CLEARLY NOTED BY THE CONTRACTOR HAS NOT BEEN REVIEWED. REVIEW BY THE ENGINEER SHALL NOT RELIEVE THE CONTRACTOR OF THE CONTRACTUAL RESPONSIBILITY FOR ANY ERRORS OR DEVIATION FROM THE CONTRACT REQUIREMENTS.

RICK HEBERT — REVIEWER
7/8/2015 — DATE

NO.	DATE	REMARKS	BY

REVISIONS

CASCO BAY STEEL STRUCTURES
ONE WALLACE AVENUE
SOUTH PORTLAND, ME 04106
PHONE: 207-780-6722
FAX: 207-780-6726

STRUCTURE	BENMONT AVE. (TH-7) (URBAN MINOR ARTERIAL)
LOCATION	TOWN OF BENNINGTON, VERMONT
PROJECT NO.	BRIDGE NO. 57 PROJECT NO. BRF 1000(16)
ENGINEER	STATE OF VERMONT AGENCY OF TRANSPORTATION
CUSTOMER	ALPINE CONSTRUCTION
ITEM	ERECTION PLAN
SURFACE PREP.	OPEN HOLES
PAINT	
APPROVAL	DRAWN MJH 12-3-14
SHOP	CHECKED FM 1-6-15

SHEET NO. E1
JOB NO. 605

1411-1
EPLN 1411A

Should this be approx. 7'-0" ?

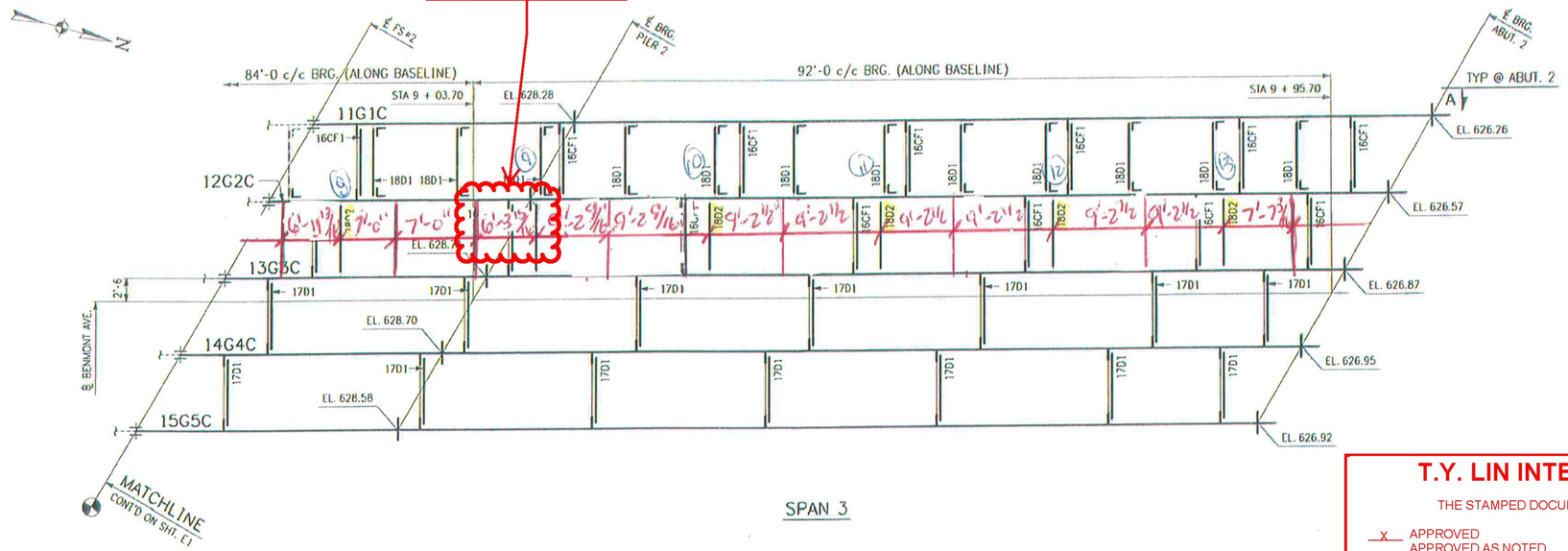

SPAN 3

Ok with general spacings as indicated. Did find some minor discrepancies with summations for spacings in comparison to locations of utility supports shown in approved shop drawings. Just check/verify spacings as noted.

T.Y. LIN INTERNATIONAL

THE STAMPED DOCUMENTS ARE HEREBY:

__X__ APPROVED
____ APPROVED AS NOTED
____ REVISE AND RESUBMIT

SEE TRANSMITTAL FOR ADDITIONAL INFORMATION AS APPLICABLE.

THIS REVIEW IS FOR GENERAL CONFORMANCE WITH DESIGN CONCEPT ONLY. ANY DEVIATION FROM THE PLANS OR SPECIFICATIONS NOT CLEARLY NOTED BY THE CONTRACTOR HAS NOT BEEN REVIEWED. REVIEW BY THE ENGINEER SHALL NOT RELIEVE THE CONTRACTOR OF THE CONTRACTUAL RESPONSIBILITY FOR ANY ERRORS OR DEVIATION FROM THE CONTRACT REQUIREMENTS.

RICK HEBERT — REVIEWER
7/8/2015 — DATE

FIELD BOLT LIST — A325 TYPE 3 BOLTS

LINE	NO. REQ'D.	BOLT DIAM.	BOLT LEN.	BOLTS /CONN.	# OF CONN.	GRIP	THICKNESS OF PCS. CONNECTED	WASH CODE	PIECES CONNECTED AND REMARKS
1									FIELD SPLICES
2	480	7/8	3 1/4	48	10	2 1/2	3/4 1" 3/4	1	TOP FLANGE SPLICE
3	600	7/8	2 1/4	60	10	1 1/2	1/2 1/2 1/2	1	WEB SPLICE
4	480	7/8	3 1/4	48	10	2 1/2	3/4 1" 3/4	1	BOTTOM FLANGE SPLICE
5									
6									DIAPHRAGMS
7	112	3/4	2	4	28	7/8	3/8 1/2	1	WATERLINE UTILITY SUPPORTS TO GDR'S
8	26	7/8	2	2	13	3/4	3/8 3/8	1	6" DUCT BANK SUPPORTS TO GDR. CONN. L
9	210	7/8	2 1/4	14	30	15/16	7/16 1/2	1	DPH'S BTW. GDR'S 4 ℄ 5 TO CONN. PL'S
10	210	7/8	2 1/2	14	30	15/16	7/16 1/2	2	DPH'S BTW. GDR'S 3 ℄ 4 TO CONN. PL'S
11	112	3/4	2	4	28	11/16	3/8 5/16	1	WATERLINE UTILITY SUPPORT W8 x 31 TO L4 x 4
12									
13									CROSSFRAMES
14	480	7/8	2 1/4	16	30	7/8	3/8 1/2	1	CF'S BTW. GDR'S 1, 2 ℄ 3 TO CONN. PL'S

1: 1 HARD FLAT WASHER
2: 2 HARD FLAT WASHERS ⚠

WASHER CODES

FIELD BOLT SUMMARY — 2% + 3 ADDED, MIN. 3 EXTRA

	LINE	NO. OF BOLTS	BOLT DIAM.	TYPE	BOLT LEN.	ACTUAL COUNT	
	1	30	7/8	A325 Type 3	2	26	
⚠	2	707	7/8	A325 Type 3	2 1/4	690	
	3	615	7/8	A325 Type 3	2 3/4	600	
	4	982	7/8	A325 Type 3	3 1/4	960	
⚠	5	217	7/8	A325 Type 3	2 1/2	210	
⚠	6	231	3/4	A325 Type 3	2	224	
	7						
⚠	8	2768	Hard Flat Washers for 7/8" BOLT		2696	F436-3	
	9						
⚠	10	231	Hard Flat Washers for 3/4" BOLT		224	F436-3	
	11						
	12						

NO.	DATE	REMARKS	BY
⚠	2-26-15	ADDED BOLTS FOR BOLTING OF L4 x 4 x 3/8 TO W8 x 31 AT WATER SUPPORT	WCC

REVISIONS

CASCO BAY STEEL STRUCTURES
ONE WALLACE AVENUE, SOUTH PORTLAND, ME 04106
PHONE: 207-780-6722 FAX: 207-780-6726

STRUCTURE	BENMONT AVE. (TH-7) (URBAN MINOR ARTERIAL)
LOCATION	TOWN OF BENNINGTON, VERMONT
PROJECT NO.	BRIDGE NO. 57 PROJECT NO. BRF 1000(16)
ENGINEER	STATE OF VERMONT AGENCY OF TRANSPORTATION
CUSTOMER	ALPINE CONSTRUCTION
ITEM	ERECTION PLAN
SURFACE PREP.	OPEN HOLES
PAINT	
APPROVAL	
SHOP	DRAWN 12-3-14 / CHECKED 1-6-15

SHEET NO. E2 — JOB NO. 605

1411-1 — EPLN: 1411B

Sheet E2 - Plotted: 06/25/2015 @ 08:32 (DMRS)

LINE	NO. OF PCS.	SHIP MARK	ASS'Y MARK	MATERIAL SHAPE	SECTION	LENGTH FT.	LENGTH IN.	MATERIAL SPEC.	ITEM NO.	REMARKS
1				DUCT	BANK SUPPORTS					
2	18	20D1	a20	L	5 x 3 x 3/8	8	0 1/2	M270-50W	4/5	687 lbs.
3	183		b20	L	4 x 4 x 3/8	0	8	M270-50W	4/8	183 lbs.
4	183		c20	L	4 x 4 x 3/8	0	8	M270-50W	4/8	183 lbs.
5	54				7/8 BOLT	0	2	A307	8/3	
6										
7	110				7/8 BOLT	0	2 1/4	A307		
8										
9										
10										
11										
12										
13										
14										
15										
16										
17										
18										
19										
20										
21										
22										
23										
24										
25										

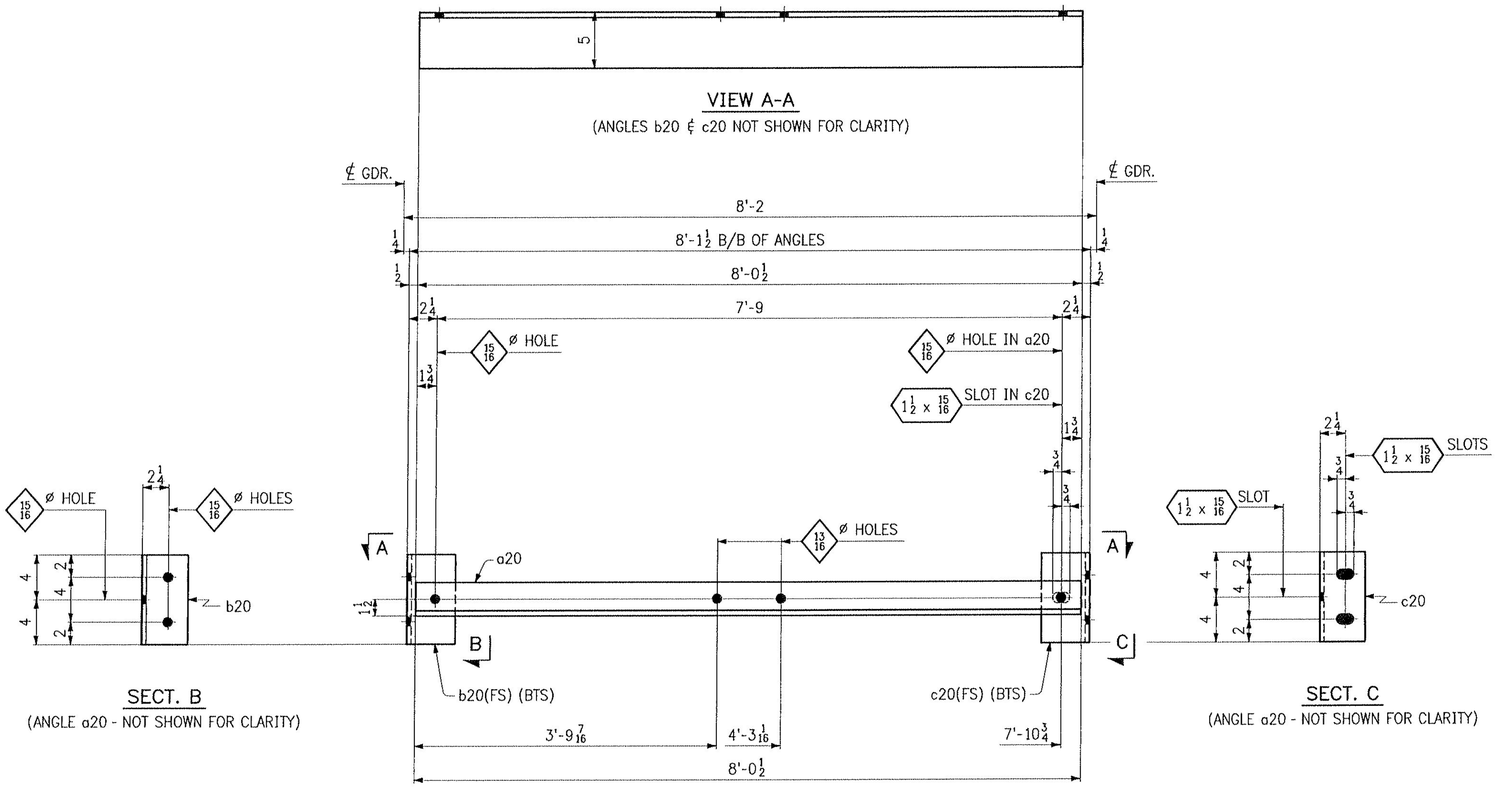

SECT. B
(ANGLE a20 - NOT SHOWN FOR CLARITY)

SECT. C
(ANGLE a20 - NOT SHOWN FOR CLARITY)

27 ~ 6" DUCT BANK SUPPORTS ~ 20D1

NOTES:

1. FOR GENERAL NOTES, SEE SHT. GN1.
2. BTS - BOLTED FOR SHIPMENT.

T.Y. LIN INTERNATIONAL

THE STAMPED DOCUMENTS ARE HEREBY:

X APPROVED
____ APPROVED AS NOTED
____ REVISE AND RESUBMIT

SEE TRANSMITTAL FOR ADDITIONAL INFORMATION AS APPLICABLE.

THIS REVIEW IS FOR GENERAL CONFORMANCE WITH DESIGN CONCEPT ONLY. ANY DEVIATION FROM THE PLANS OR SPECIFICATIONS NOT CLEARLY NOTED BY THE CONTRACTOR HAS NOT BEEN REVIEWED. REVIEW BY THE ENGINEER SHALL NOT RELIEVE THE CONTRACTOR OF THE CONTRACTUAL RESPONSIBILITY FOR ANY ERRORS OR DEVIATION FROM THE CONTRACT REQUIREMENTS.

RICK HEBERT — REVIEWER
7/8/2015 — DATE

NO.	DATE	REMARKS	BY

REVISIONS

CASCO BAY STEEL STRUCTURES
ONE WALLACE AVENUE
SOUTH PORTLAND, ME 04106
PHONE: 207-780-6722
FAX: 207-780-6726

STRUCTURE: BENMONT AVE. (TH-7) (URBAN MINOR ARTERIAL)
LOCATION: TOWN OF BENNINGTON, VERMONT
PROJECT NO.: BRIDGE NO. 57 PROJECT NO. BRF 1000(16)
ENGINEER: STATE OF VERMONT AGENCY OF TRANSPORTATION
CUSTOMER: ALPINE CONSTRUCTION
ITEM: UTILITY SUPPORTS
SURFACE PREP.: SSPC-SP10 OPEN HOLES: AS NOTED
PAINT: NONE

APPROVAL	DRAWN WCG 6-30-15	SHEET NO.	JOB NO.
SHOP	CHECKED RJH 7-6-15	20	605

1411-12

UTILITY-1411B

Sheet 20 - Plotted: 07/07/2015 @ 10:50 (HEATHER)