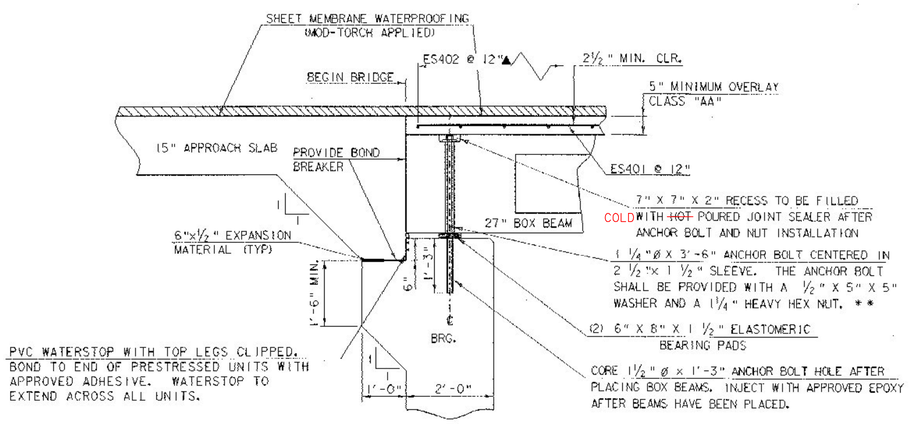

ABUTMENT #1 END OF BRIDGE DETAIL

SCALE ¾" = 1'-0

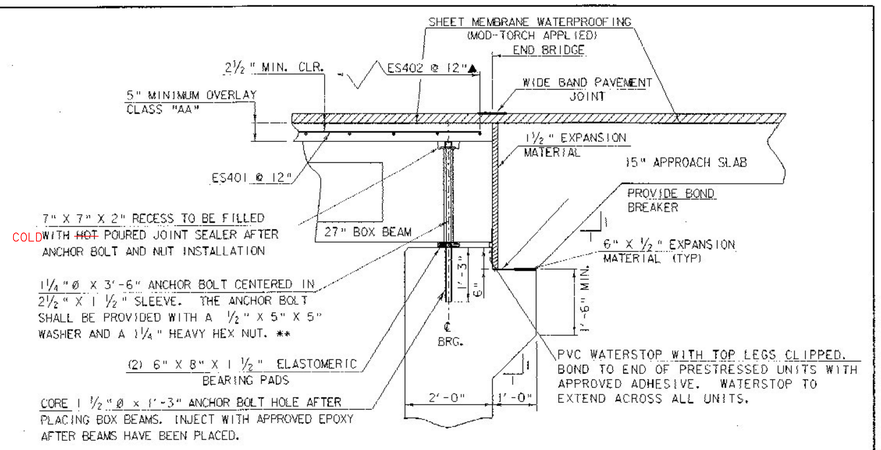

ABUTMENT #2 END OF BRIDGE DETAIL

SCALE ¾" = 1'-0

** NOTE: FABRICATOR SHALL SUPPLY A SELF ADHESIVE COMPRESSIBLE SEALER BETWEEN THE BOTTOM OF THE UNITS AND THE BRIDGE SEAT. THIS COMPRESSIBLE SEALER SHALL SURROUND THE 2½" X 1½" SLEEVE IN THE UNIT. THE PURPOSE OF THE SEALER IS TO FACILITATE PLACEMENT OF THE EPOXY AROUND THE ANCHOR BOLTS.

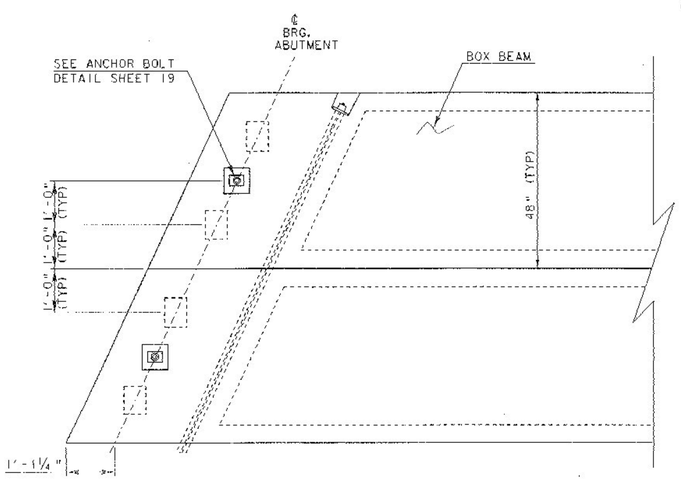

ABUTMENT BEARING PLACEMENT DETAIL

SCALE ¾" = 1'-0

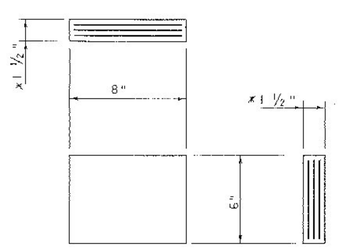

ELASTOMERIC BEARING DETAIL

* 4 - 0.30" LAYERS OF ELASTOMERIC ALTERNATING WITH 3 - 14 GAGE STEEL REINFORCING PLATES

SCALE 3" = 1'-0

BEARING NOTES

1) ALTERNATE CONFIGURATIONS FOR ELASTOMERIC BEARINGS MAY BE SUBMITTED FOR APPROVAL. ANY ALTERNATE BEARING SUBMITTED SHALL BE DESIGNED AND CERTIFIED TO MEET THE LOADS AND CRITERIA SHOWN ON THIS SHEET AND MAINTAIN THE ANCHORAGE SYSTEM SHOWN. THE BEARINGS SHALL BE DESIGNED ACCORDING TO AASHTO "STANDARD SPECIFICATIONS FOR HIGHWAY BRIDGES" 1996 ED. AND ITS LATEST REVISIONS.

2) THE BEARING SHAPE FACTOR SHALL BE BETWEEN 5.0 AND 12.0.

3) ALL REINFORCEMENT BETWEEN LAYERS OF ELASTOMERIC SHALL BE STEEL GR. A36. NO FABRIC REINFORCEMENT WILL BE PERMITTED.

4) ELASTOMERIC BEARINGS REINFORCED WITH STEEL SHALL HAVE A ⅛" EDGE SEAL OF ELASTOMERIC INTEGRAL WITH THE BEARING OVER ALL PLATES.

5) ALL MATERIALS AND FABRICATION SHALL BE PER AASHTO DIVISION II SECTION 18.2 AND AASHTO MATERIAL SPECIFICATION M251.

6) DESIGN CRITERIA:

A) TEMPERATURE RANGE: 80° F

B) 60 DUROMETER ELASTOMERIC

C) MAXIMUM BEARING STRESS: 1000 PSI

D) DESIGN ROTATION: 0.014 RAD.

E) REACTION/BEAM:
DDL: 41.8 K
LLL: 24.2 K

PROJECT NAME: UNDERHILL
PROJECT NUMBER: BRS 0233 (2)

FILE NAME: 88j099/sj099sup.dgn
IPARM NAME: sj099bea.i
PROJECT LEADER: C.P. WILLIAMS
DESIGNED BY: K.M. HIGGINS
END OF BRIDGE DETAILS

PLOT DATE: 21-FEB-2001
DRAWN BY: D.G. BASSETT
CHECKED BY: K.M. HIGGINS
SHEET 19 OF 43