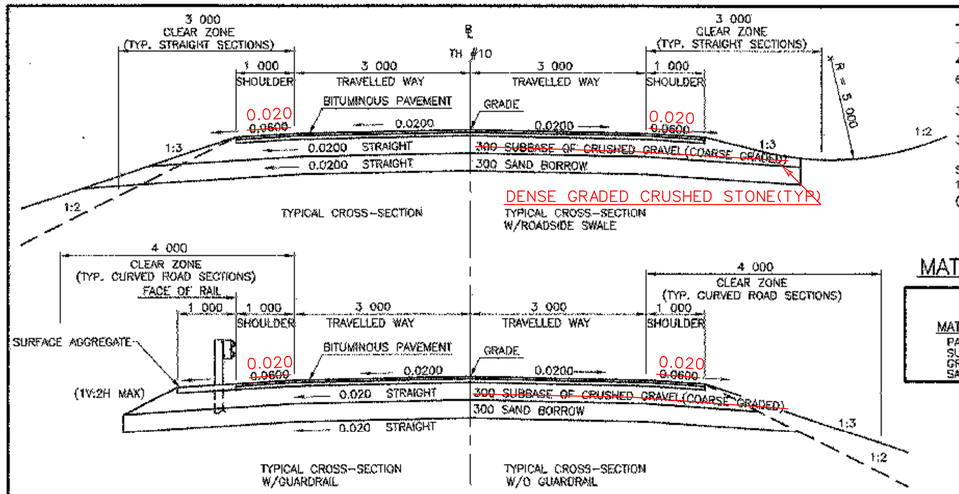

TYPICAL ROADWAY SECTIONS

SCALE 1:50

TYPICAL SECTIONS

40 BITUMINOUS CONCRETE PAVEMENT (TYPE III)
60 BITUMINOUS CONCRETE PAVEMENT (TYPE II)

300 SUBBASE OF CRUSHED GRAVEL (COARSE GRADED)

300 SAND BORROW

SHOULDERS:
100 BITUMINOUS CONCRETE PAVEMENT
(40 TYPE III OVER 60 TYPE II)

MATERIALS TOLERANCE TABLE

MATERIAL ITEM	THICKNESS TOLERANCE IN MILLIMETERS
PAVEMENT (TOTAL DEPTH)	± 5
SUBBASE	± ± 25
GRANULAR BORROW	± ± 25
SAND BORROW	± 25

BRIDGE PAVEMENT

TOP LIFT 40 TYPE III
BOTTOM LIFT 60 TYPE II

EMULSIFIED ASPHALT BETWEEN LIFTS

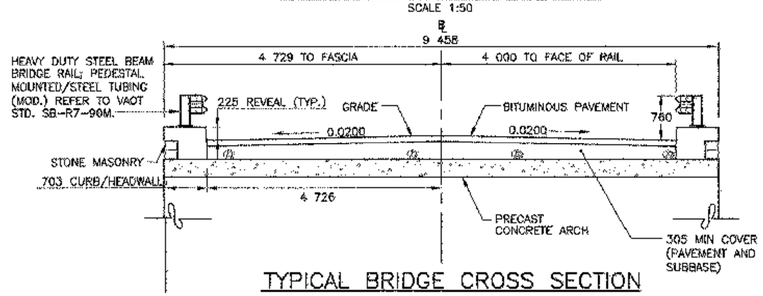

TYPICAL BRIDGE CROSS SECTION

SCALE 1:50

$$\text{STRENGTH RF} = \frac{\phi M_n - 1.3M_{DL}}{A \times M_{LL+I}}$$

$$\text{*SERVICEABILITY RF} = B \left[\frac{.95F_y S_{LL+I} - M_{DL}\frac{S_{LL+I}}{S_{DL}} - M_{SDL}\frac{S_{LL+I}}{S_{DL}}}{1.67\ M_{LL+I}}\right]$$

LOADING LEVELS (LOAD FACTOR)	LOAD FACTOR LOAD RATING (METRIC TONS)						
	TRUCK						
	H	HS	3S2	6 AXLE	3A STR.	4A STR.	5A SEMI
INVENTORY A=2.17, B=1.00			X	X	X	X	X
POSTED A=1.55, B=1.40			X	X	X	X	X
OPERATING A=1.30, B=1.67	X		X	X	X	X	X

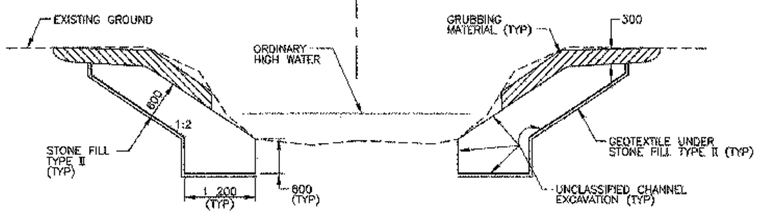

NOTE: WHENEVER CHANNEL SLOPE INTERSECTS ROADWAY SUBBASE GRUBBING MATERIAL SHALL BEGIN AT THE BOTTOM OF SUBBASE.

TYPICAL CHANNEL SECTION

NOT TO SCALE

SEEDING FORMULA
RURAL AREAS

% WT.	KG/HA	NAME	PURITY %	GERM %
37.1	26	CREEPING RED FESCUE	98	85
37.1	26	TALL FESCUE	95	90
5.7	4	RED TOP	95	90
14.4	10	BIRDSFOOT TREFOIL	98	85
5.7	4	ANNUAL RYE GRASS	95	85
100.0	70			

THE SEED MIXTURE SHALL NOT HAVE A WEED CONTENT EXCEEDING 0.40% BY WEIGHT AND SHALL BE FREE OF ALL NOXIOUS WEED SEED.

SEED TO BE APPLIED PER SEEDING FORMULA OR AS DIRECTED BY THE ENGINEER.

FERTILIZER: FORMULA 10-20-10, TO BE USED WITH SEED, APPLIED AT THE RATE OF 560 KG/HA. (HYDRO SEEDERS MAY USE 19-19-19 FORMULA).

AGRICULTURAL LIMESTONE: TO BE APPLIED AT THE RATE OF 4 500 KG/HA, OR AS DIRECTED BY THE ENGINEER.

HAY MULCH: TO BE PLACED ON EARTH SLOPES AT THE RATE OF 4 500 KG/HA OR AS DIRECTED BY THE ENGINEER.

TOPSOIL: TO BE USED WITH SEED AS INDICATED ON THE PLANS, OR AS DIRECTED BY THE ENGINEER

TACK COAT: EMULSIFIED ASPHALT IS TO BE APPLIED AT THE RATE OF 0.0679 L/m² BETWEEN SUCCESSIVE COURSES OF PAVEMENT AT THE DISCRETION OF THE ENGINEER.

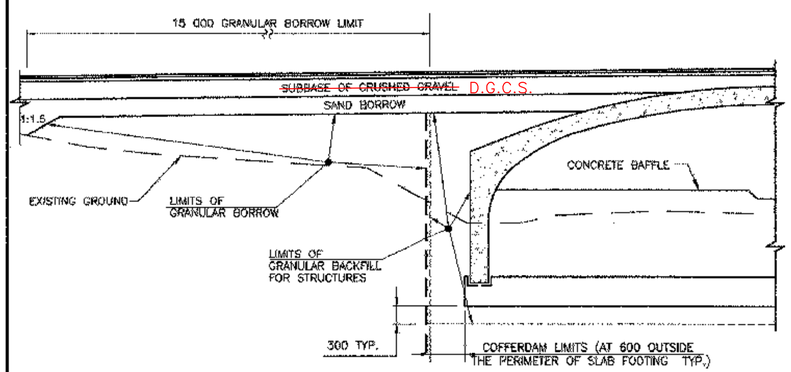

TYPICAL ABUTMENT SECTION

SCALE 1:50

1000 0 1000 2000 4000
SCALE IN MILLIMETERS

COFFERDAM NOTES:

1. COFFERDAM LIMITS TO BE DETERMINED BY CONTRACTOR.
2. FOR PURPOSES OF ESTIMATING EARTHWORK QUANTITIES, THE LIMITS OF COFFERDAM HAVE BEEN ASSUMED TO BE 600 OUTSIDE THE PERIMETER OF THE SLAB FOOTING.
3. 300 UNDERCUT SHALL BE USED UNDER ENTIRE ARCH AND WINGWALL FOOTINGS AND EXTEND 300 BEYOND EDGE.
4. IF A COFFERDAM IS CONSTRUCTED WHICH IS MORE THAN THE INDICATED MINIMUM DISTANCE OUTSIDE THE FOOTING LIMITS, PAYMENT FOR ALL UNCLASSIFIED CHANNEL EXCAVATION INCLUDING THAT PORTION WHICH IS INSIDE THE COFFERDAM BUT OUTSIDE THE MINIMUM COFFERDAM LIMITS SHOWN WILL BE MADE AT THE CONTRACT UNIT PRICE FOR UNCLASSIFIED CHANNEL EXCAVATION.

TRAFFIC DATA

1995	ADT	= 460
1995	DHV	= 64
2015	ADT	= 635
2015	DHV	= 91
	D	= 54%
	T	= 1%

DESIGN SPEED = 50 km/h
ESALS (FLEXIBLE) TOTAL BOTH DIRECTIONS (1995–2015) 109,500
(1995–2035) 349,500

FINAL HYDRAULICS REPORT

VAOT Metric

HYDROLOGIC DATA

DRAINAGE AREA= 49.608 sq. km
CHARACTER OF TERRAIN: RURAL, MOUNTAINOUS WITH SIGNIFICANT WETLAND STORAGE
CHARACTER & TYPE OF STREAM: RURAL, SINUOUS WITH LARGE FLOOD PLAINS; ALLUVIAL AND LATERALLY UNSTABLE
NATURE OF STREAMBED: 0.9% GRADIENT, SILT AND GRAVEL

Q2.33= 8 cms Q50= 31 cms
Q10= 17 cms Q100= 41 cms
Q25= 23 cms Q500= 70 cms

DATE OF FLOOD OF RECORD: NOVEMBER 1927
WATER SURFACE ELEV.: NOT AVAILABLE ESTIMATED DISCHARGE: NOT AVAILABLE
NATURAL STREAM VELOCITY @ Q 25 2.3 m/s
ICE CONDITIONS: MODERATE DEBRIS: LIGHT
DOES THE STREAM REACH MAXIMUM HIGHWATER ELEVATION RAPIDLY? NO
IS ORDINARY RISE RAPID? NO
IS STAGE AFFECTED BY UPSTREAM OR DOWNSTREAM CONDITIONS? NO
IF YES, DESCRIBE.

WATERSHED STORAGE 13% HEADWATERS YES UNIFORM THROUGHOUT WATERSHED – – –
IMMEDIATELY ABOVE SITE YES

EXISTING STRUCTURE

STRUCTURE TYPE: DECK HAS BEEN REMOVED YEAR BUILT: 1919
CLEAR SPAN (NORMAL TO STREAM): 6.65 m
VERTICAL CLEARANCE ABOVE STREAMBED: 0.845± m
WATERWAY OF FULL OPENING: 5.02 sq m
DISPOSITION OF STRUCTURE: BRIDGE DECK IS REMOVED; ABUTMENTS TO BE DISPOSED OF
TYPE OF MATERIAL UNDER SUBSTRUCTURE: MEDIUM DENSE SANDY GRAVEL AND SILT

WATER SURFACE ELEV. @ Q2.33= 252.30 m VELOCITY= 1.46 m/s
Q10= 252.97 m " 3.12 m/s
Q25= 253.26 m " 3.52 m/s
Q50= 253.42 m " 3.41 m/s
Q100= 253.56 m " 3.46 m/s

LONG TERM STREAMBED CHANGES: LATERALLY UNSTABLE

IS THE ROADWAY OVERTOPPED BELOW THE Q100? YES FREQUENCY: Q 25
RELIEF ELEVATION: 253.029 DISCHARGE OVER ROAD @ Q100: 23 cms

UPSTREAM STRUCTURE: TOWN: CLARENDON DISTANCE: 350 m
HIGHWAY NO.: TH #3 STRUCTURE NO.: BR 15
STRUCTURE TYPE: CONCRETE T-BEAM
CLEAR SPAN: 20.12 m CLEAR HEIGHT: 3.35 m
YEAR BUILT: 1938 FULL WATERWAY: 67.4 sq m

DOWNSTREAM STRUCTURE: TOWN: CLARENDON DISTANCE: 3.6 km
HIGHWAY NO.: TH #18 STRUCTURE NO.: BR 24
STRUCTURE TYPE: CONCRETE T-BEAM
CLEAR SPAN: 10.06 m CLEAR HEIGHT: 2.44 m
YEAR BUILT: 1949 FULL WATERWAY: 24.5 sq m

PROPOSED STRUCTURE

STRUCTURE TYPE: PRECAST CONCRETE ARCH BRIDGE

CLEAR SPAN (NORMAL TO STREAM): 9.754 m
VERTICAL CLEARANCE ABOVE STREAMBED: 1.594 m (TO APEX OF ARCH)
WATERWAY OF FULL OPENING: 11.09 sq m

WATER SURFACE ELEV. @ Q2.33= 252.17 m VELOCITY= 1.80 m/s
Q10= 252.60 m " " 2.53 m/s
Q25= 252.89 m " " 3.09 m/s
Q50= 253.48 m " = 2.36 m/s
Q100= 253.69 m " = 2.58 m/s

IS THE ROADWAY OVERTOPPED BELOW THE Q100? YES FREQUENCY: Q 50
RELIEF ELEVATION: 253.176 DISCHARGE OVER ROAD @ Q100: 13 cms

AVERAGE LOW ELEVATION OF SUPERSTRUCTURE: NOT APPLICABLE (APEX = EL. 252.894)
VERTICAL CLEARANCE @ Q 25 NO CLEARANCE

SCOUR: 1.6 m
REQUIRED CHANNEL PROTECTION: TYPE II STONE FILL

PERMIT INFORMATION

AVERAGE DAILY FLOW: 1.1 cms ELEV: 251.82
ORDINARY LOW WATER: 0.5 cms ELEV: 251.74
ORDINARY HIGH WATER: 3.3 cms ELEV: 251.90

ADDITIONAL COMMENTS

POOR FOUNDATION CONDITIONS REQUIRE A FULL BOTTOM SLAB TO ELIMINATE DIFFERENTIAL SETTLEMENT.

DESIGN CRITERIA:
1. DESIGN LIVE LOAD AASHTO MS 22.5
2. DESIGN SPAN 9754 ℄ BRG TO ℄ BRG
3. ALLOWABLE LOAD FOR SPREAD FOOTINGS ON SOIL 120 kPa ON LEDGE N/A
4. ALLOWABLE LOAD FOR PILING N/A TYPE N/A ESTIMATED LENGTH N/A
5. STRUCTURAL STEEL AASHTO 270M/M 270 GRADE N/A
6. REINFORCING STEEL GRADE 420
7. CONCRETE CLASS A f'_c 30 MPa
   CLASS B f'_c 25 MPa
   SILICA FUME f'_c 35 MPa

TRAFFIC MAINTENANCE:
1. IS TRAFFIC TO BE MAINTAINED? NO IF YES, ON EXISTING STRUCTURE N/A OR ON TEMPORARY BRIDGE N/A
2. TEMPORARY BRIDGE REQUIREMENTS: ONE OR TWO WAY N/A TRAFFIC CONTROL SIGNALS REQUIRED N/A
   MINIMUM CLEAR SPAN (NORMAL TO STREAM): N/A VERTICAL CLEARANCE ABOVE STREAMBED: N/A
   WATERWAY OF FULL OPENING: N/A
   ARE SIDEWALKS REQUIRED? N/A IF SO, ON WHAT SIDE? N/A
   STRUCTURE TYPE: N/A

REVISIONS

NO.	DESCRIPTION	BY & DATE

DuBois & King inc.
engineering planning management development

STATE OF VERMONT
AGENCY OF TRANSPORTATION

CLARENDON, VERMONT	Bridge No. 25
	Log Sta.
TOWN HIGHWAY NO. 10	Surv. Sta.

TOWN HIGHWAY NO. 10 OVER THE CLARENDON RIVER

PRELIMINARY INFORMATION SHEET

Designed by: W.S. CHESBROUGH	Drawn by: N.B. DIMICK
Checked by: K.S. MARSHIA date:	Bridge Design Supervisor J.W. TUCKER date
VAOT PROJECT NO. BRO 1443(27)	DK PROJECT NO. R13567F5
Bridge Sheet No.	Sheet 2 of 25

Z:\R13567F5\dwg\FINAL\1336FP02.dwg Th, Jun 08 08:05:55 2000

Metric

LEGEND

- DECIDUOUS TREE
- STUMP
- TREE LINE
- GRAVEL ROAD
- ROADWAY CENTERLINE
- JERSEY BARRIER
- BUILDINGS
- UTILITY POLE
- GUY WIRE
- SIGN
- R.O.W.
- FENCE
- SURVEY CONTROL POINT
- OVERHEAD POWER
- NEW BRIDGE DECK
- EDGE OF RIVER
- WETLAND
- LIMIT OF CUT
- LIMIT OF FILL
- CLEAR ZONE
- SNOW FENCE

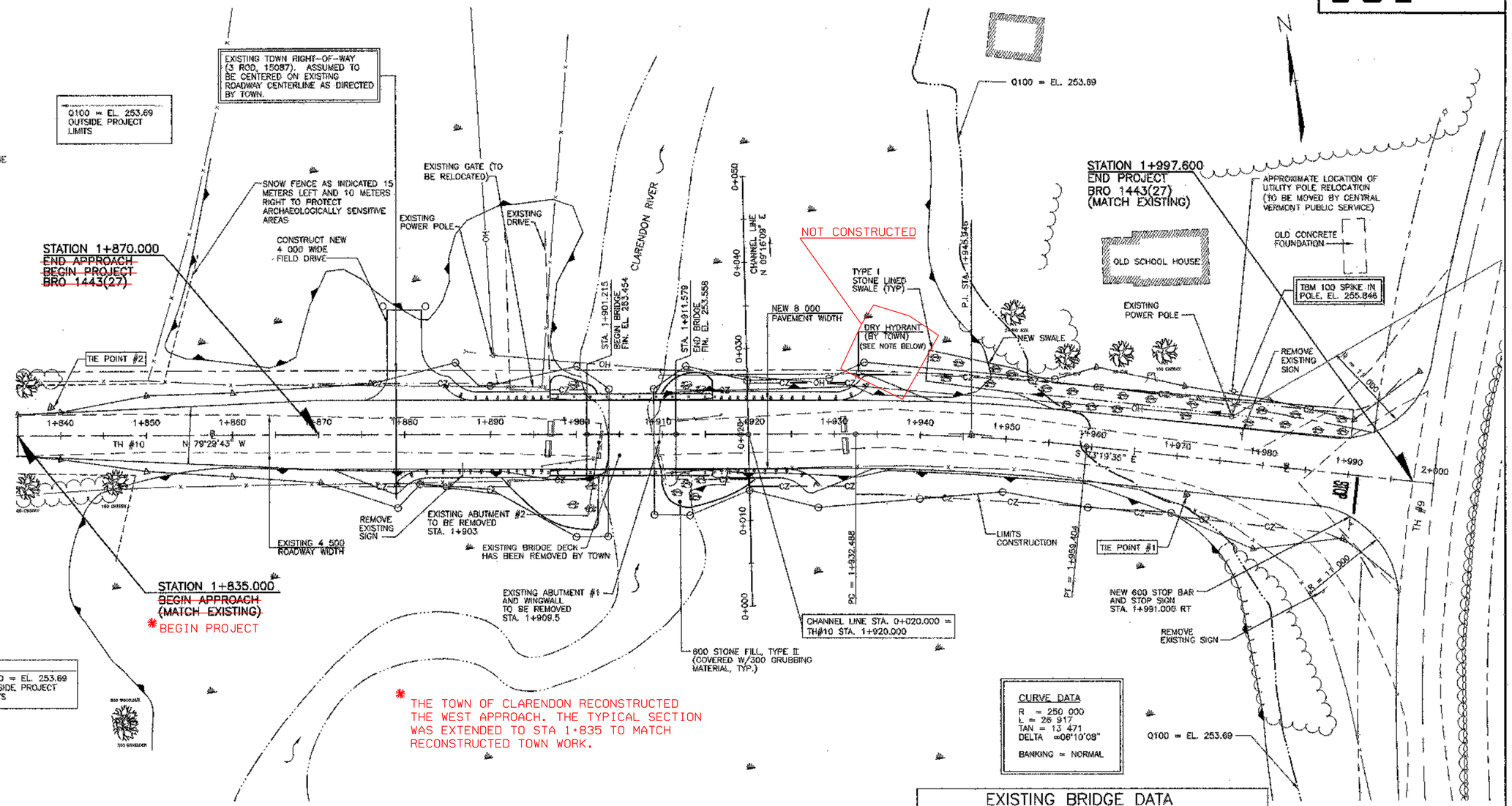

CURVE DATA

R = 250 000
L = 26 917
TAN = 13 471
DELTA = 06°10'08"

BANKING = NORMAL

LAYOUT PLAN

SCALE: 1:250

EXISTING BRIDGE DATA

COMPONENT	LENGTH	HEIGHT	THICKNESS	CONSTRUCTION
SUPERSTRUCTURE	REMOVED			
ABUTMENT NO. 1 AND WINGWALL	6 200	2 000	500	CONCRETE
ABUTMENT NO. 2	4 000	2 000	600	LAID-UP STONE WITH CONCRETE CAP

NOTE:

1. ALL DIMENSIONS AND ELEVATIONS ARE IN MILLIMETERS UNLESS OTHERWISE NOTED. ALL STATIONS ARE IN KILOMETERS.
2. TOWN SHALL COORDINATE WITH SELECTED CONTRACTOR FOR PRICE AND INSTALLATION OF DRY HYDRANT.

THE TOWN DID NOT PURSUE THE CONSTRUCTION OF THIS HYDRANT.

HEAVY DUTY STEEL BEAM GUARDRAIL

STA. 1+878.811 RT to 1+895.923 RT
STA. 1+884.472 LT to 1+895.923 LT
STA. 1+916.873 RT to 1+928.240 RT
STA. 1+916.873 LT to 1+933.910 LT

REMOVE AND RESET FENCE

STA. 1+870.0 LT to 1+892.0 LT (ELECTRIC AND BARBED WIRE)
STA. 1+870.0 RT to 1+902.0 RT (ELECTRIC)
STA. 1+913.0 RT to 1+980.0 RT (ELECTRIC)
STA. 1+895.0 LT TO STA. 1+880.0 LT (MOVE FIELD GATE)

BITUMINOUS CONCRETE PAVEMENT

STA. 1+855.000 TO STA. 1+997.600

100 mm YELLOW LINE

STA. 1+855.000 TO STA. 1+997.600

CONSTRUCT DRIVE

STA. 1+880.0 LT

GUARDRAIL ANCHORS

STA. 1+880.811 RT
STA. 1+886.650 LT
STA. 1+926.240 RT
STA. 1+931.910 LT

BRIDGE RAILING
HEAVY DUTY STEEL BEAM
W/FASCIA MOUNTED/STEEL TUBING (MOD.)

STA. 1+895.923 RT to STA. 1+916.873 RT
STA. 1+895.923 LT to STA. 1+916.873 LT

NEW SWALE

STA. 1+940.0 LT to STA. 1+990.0 LT

REMOVING SIGNS

STA. 1+886.861 RT
STA. 1+977.197 LT
STA. 1+988.502 RT

600 STOP BAR

STA. 1+991.000 RT

LETTER OR SYMBOL

STA. 1+991.000 RT

TRAFFIC SIGNS, TYPE A

STA. 1+991.000 RT

REVISIONS		
NO.	DESCRIPTION	BY & DATE

STATE OF VERMONT
AGENCY OF TRANSPORTATION

CLARENDON, VERMONT	Bridge No. 25
	Log Sta.
TOWN HIGHWAY NO. 10	Surv. Sta.
TOWN HIGHWAY NO. 10 OVER THE CLARENDON RIVER	
LAYOUT SHEET	
Designed by: W.S. CHESBROUGH	Drawn by: N.B. DIMICK
Checked by: K.S. MARSHIA date	Bridge Design Supervisor J.W. TUCKER date
VAOT PROJECT NO. BRO 1443(27)	OK PROJECT NO. R1356765
Bridge Sheet No.	SHEET 7 of 25

D:\R1356765\Dwg\SFT1ML\R1356765.dwg Mon Jun 18 11:50:05 2000

Metric

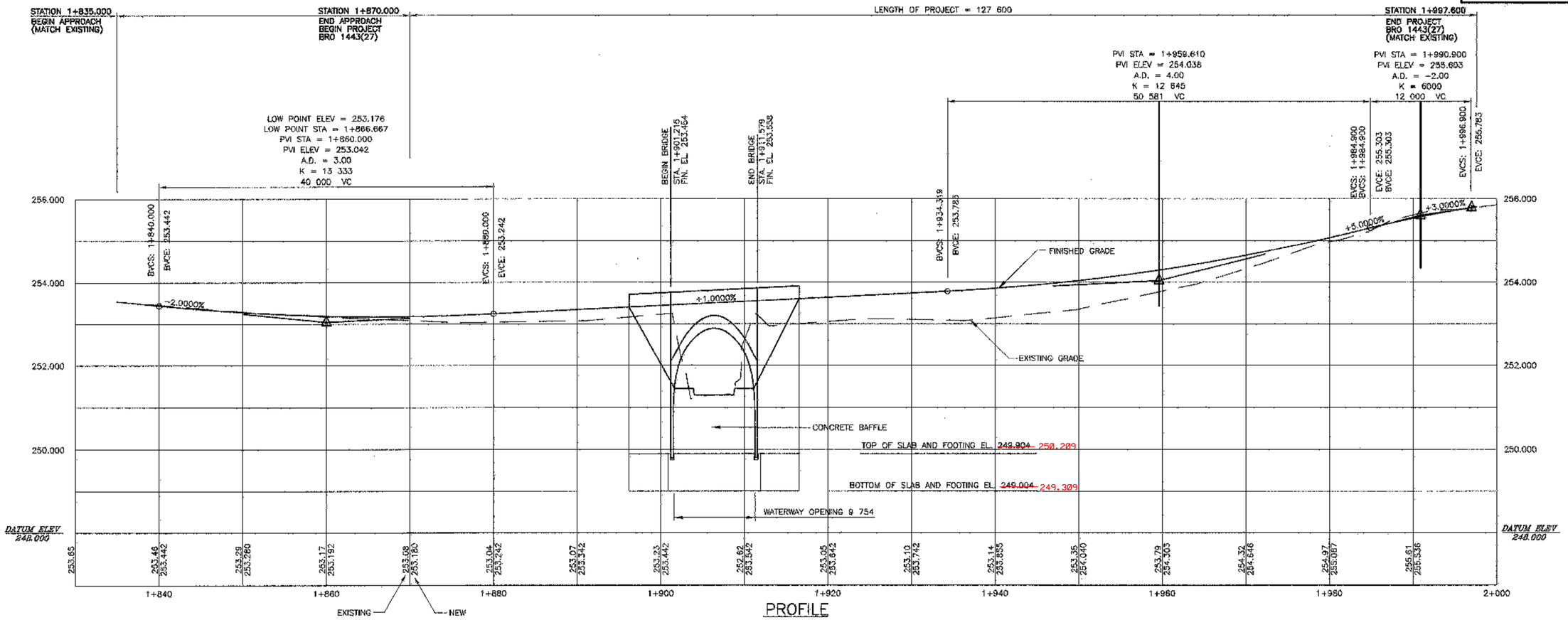

PROFILE

SCALE HORIZ. 1:250
VERT. 1:50

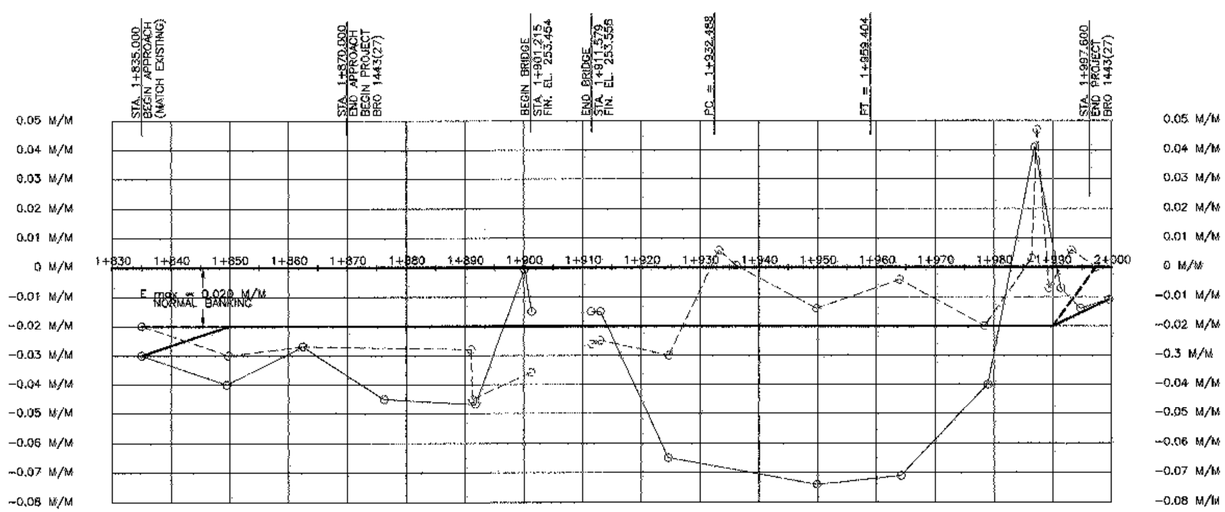

BANKING DIAGRAM

SCALE HORIZ. 1:10
VERT. 0.010 M/M

LEGEND

- LEFT EDGE OF EXISTING ROAD
- RIGHT EDGE OF EXISTING ROAD
- LEFT EDGE OF PROPOSED ROAD
- RIGHT EDGE OF PROPOSED ROAD

ARCHIVED IN DPR

REVISIONS		
NO.	DESCRIPTION	BY & DATE

DuBois & King inc.
engineering planning management development

STATE OF VERMONT
AGENCY OF TRANSPORTATION

CLARENDON, VERMONT	Bridge No. 25
	Log Sta.
TOWN HIGHWAY NO. 10	Surv. Sta.

TOWN HIGHWAY NO. 10 OVER THE CLARENDON RIVER

PROFILE SHEET

Designed by: W.S. CHESBROUGH	Drawn by: N.B. DIMICK
Checked by: K.S. MARSHA date	Bridge Design Supervisor J.W. TUCKER date
VAOT PROJECT NO. BRO 1443(27)	DK PROJECT NO. R13567F5
Bridge Sheet No.	SHEET 8 of 25

T:\R13567F5\dwg\FINAL\13567F508.dwg Thu Oct 05 08:20:03 2000

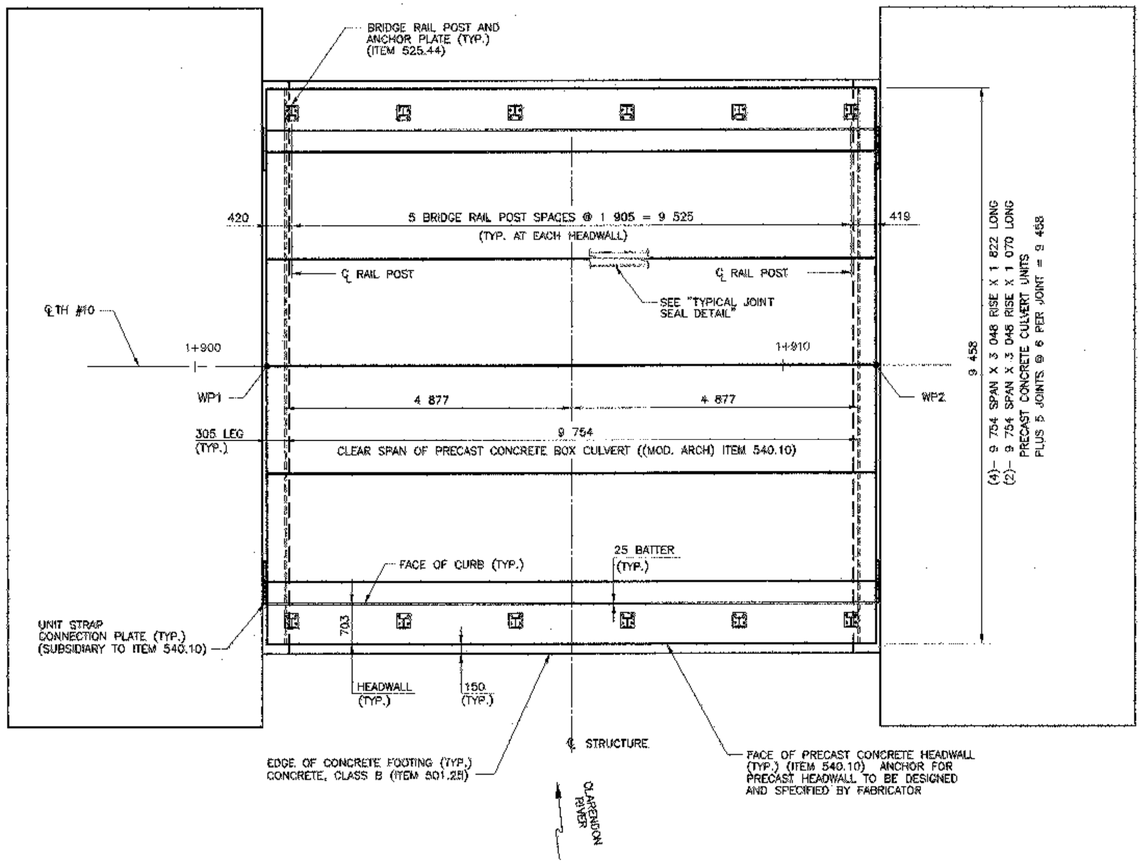

(BAFFLES NOT SHOWN FOR CLARITY)

ARCH PLAN

SCALE: 1 : 50

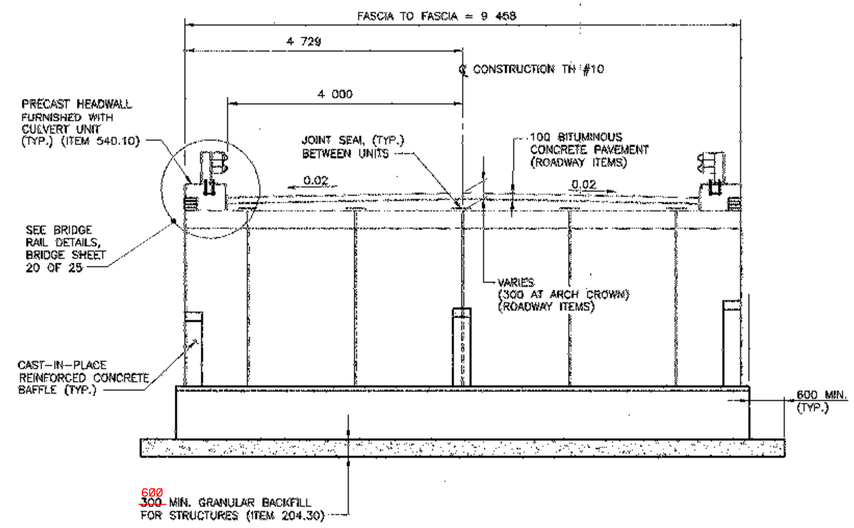

ARCH SECTION

SCALE: 1 : 50

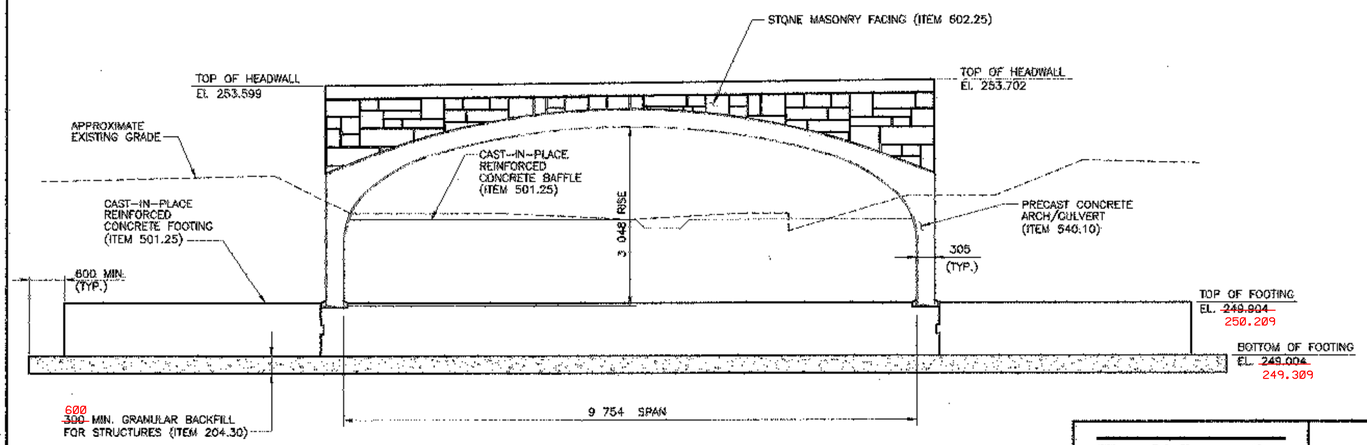

ARCH ELEVATION

SCALE: 1 : 50

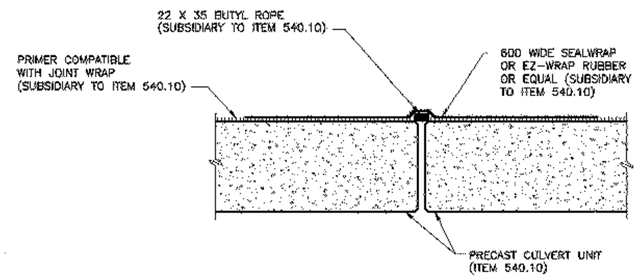

NOTE: MATERIALS SHOWN SHALL BE IN ACCORDANCE WITH MANUFACTURER'S RECOMMENDATIONS.

TYPICAL JOINT SEAL DETAIL

NOT TO SCALE

ARCHIVED ON CADD

REVISIONS		
NO.	DESCRIPTION	BY & DATE

Hayashi Corporation
Consulting Engineers
22 Manchester Road
Derry, NH 03038
Phone: (603) 425-2647
Fax: (603) 425-2697

DuBois & King inc.
engineering planning management development

STATE OF VERMONT
AGENCY OF TRANSPORTATION

CLARENDON, VERMONT	Bridge No. 25
	Log Sta.
TOWN HIGHWAY NO. 10	Surv. Sta.
TOWN HIGHWAY NO. 10 OVER THE CLARENDON RIVER	
ARCH MASONRY	
Designed by: K.L. JAMES	Drawn by: N.J. HOYT
Checked by: M.H. GALLO date 6/15/00	Bridge Design Supervisor J.W. TUCKER date
VAOT PROJECT NO. BRO 1443(27)	DK PROJECT NO. R13567FS
Bridge Sheet No.	SHEET 14 of 25

HC FILE # 090ARCH.DWG / PLOT SCALE 1 = 50

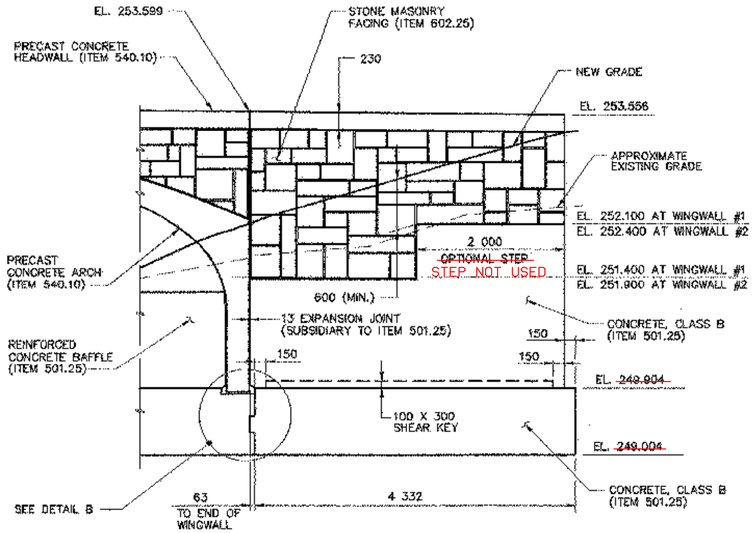

WINGWALL #1 ELEVATION

SCALE: 1 : 40

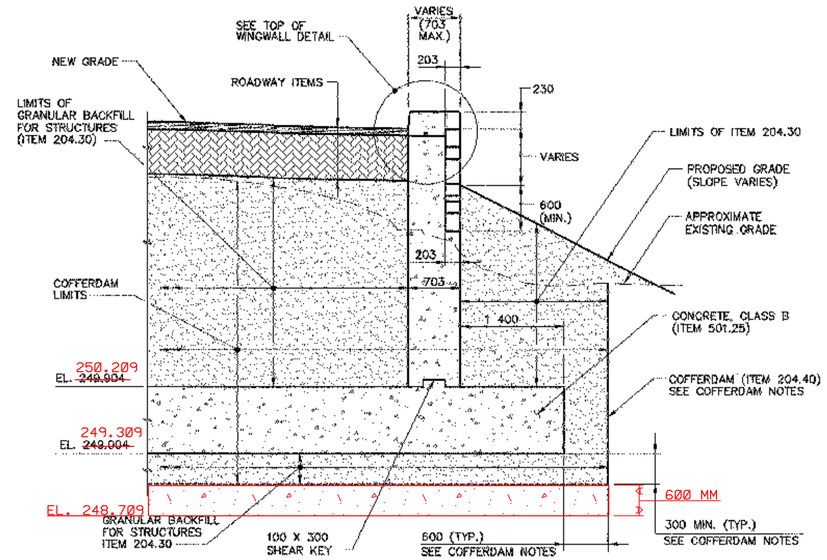

(BRIDGE RAIL NOT SHOWN)

TYPICAL WINGWALL SECTION

SCALE: 1 : 40

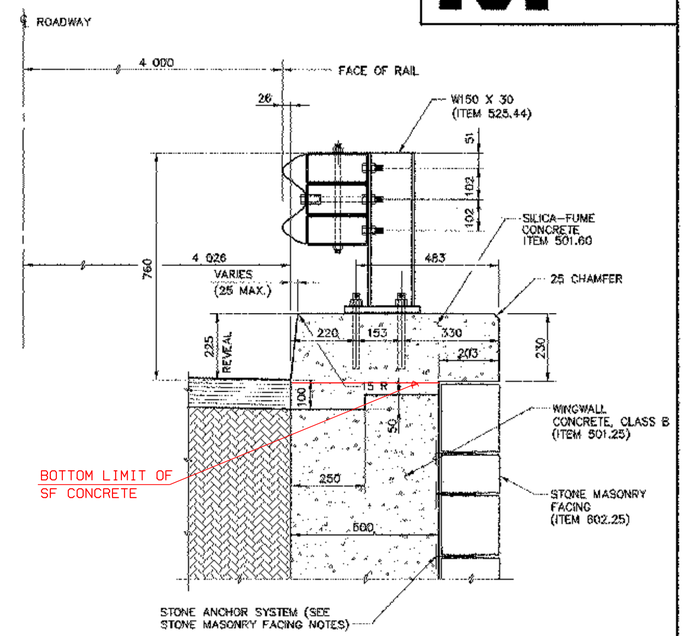

NOTES:

1. SEE "FLARED END FOR CURB" DETAIL FOR CURB GEOMETRY AT WINGWALL ENDS.
2. SEE BRIDGE SHEET 20 OF 25 FOR BRIDGE RAIL DETAILS.

TOP OF WINGWALL DETAIL

SCALE: 1 : 10

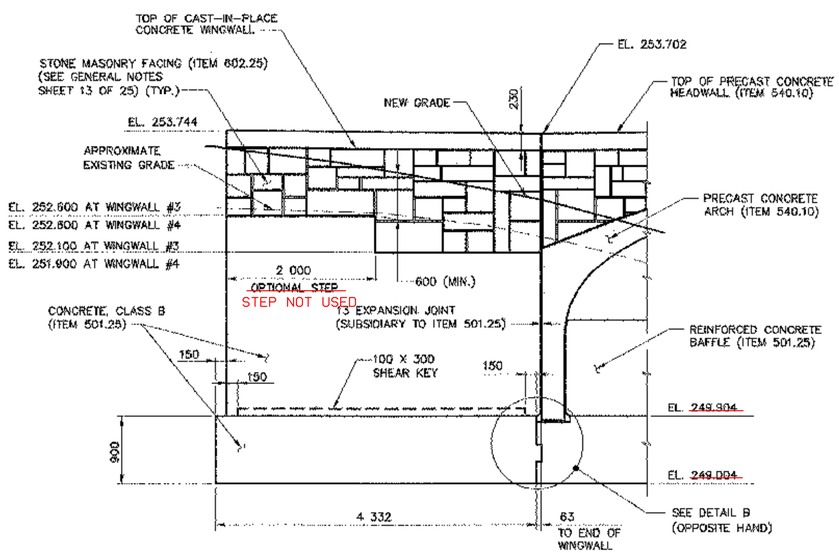

WINGWALL #3 ELEVATION

SCALE: 1 : 40

NOTE : WINGWALL #2 & #4 ARE SIMILAR BUT OPPOSITE HAND

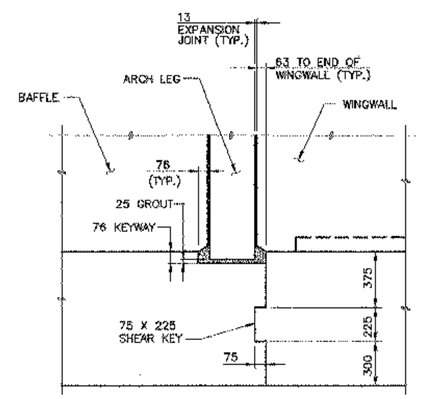

DETAIL B

SCALE 1 : 20

COFFERDAM NOTES:

1. COFFERDAM LIMITS TO BE DETERMINED BY THE CONTRACTOR.
2. FOR PURPOSES OF ESTIMATING EARTHWORK QUANTITIES, THE LIMITS OF COFFERDAM HAVE BEEN ASSUMED TO BE 600 OUTSIDE THE PERIMETER OF THE FOOTING.
3. 300 MIN. UNDERCUT AS DIRECTED BY THE RESIDENT ENGINEER.
4. FOR THE PAYMENT OF, AND THE WORK CLASSIFIED AS COFFERDAM, SEE VAOT STANDARD SPECIFICATIONS FOR CONSTRUCTION, 1995, SECTION 204 – EXCAVATION FOR STRUCTURES.

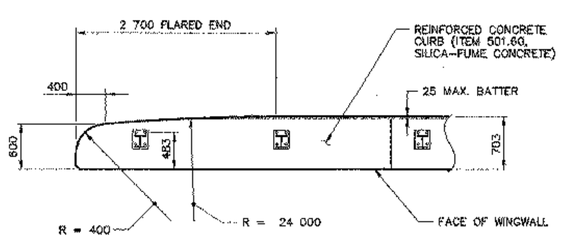

FLARED END FOR CURB

SCALE 1:40

ARCHIVED ON CADD

REVISIONS		
NO.	DESCRIPTION	BY & DATE

Hayashi Corporation
Consulting Engineers
22 Manchester Road
Derry, NH 03038
Phone: (603) 425-2647
Fax: (603) 435-2775

DuBois & King inc.
engineering planning management development

STATE OF VERMONT
AGENCY OF TRANSPORTATION

CLARENDON, VERMONT	Bridge No. 25
	Log Sta.
TOWN HIGHWAY NO. 10	Surv. Sta.
TOWN HIGHWAY NO. 10 OVER THE CLARENDON RIVER	
WINGWALL MASONRY	
Designed by: K.L. JAMES	Drawn by: N.J.HOYT
Checked by: M.H. GALLO date 6/15/00	Bridge Design Supervisor J.W. TUCKER date
VAOT PROJECT NO. BRO 1443(27)	DK PROJECT NO. R13567F5
Bridge Sheet No.	SHEET 16 of 25

HC FILE: BRIDGE15.DWG / PLOT SCALE 1 = 40

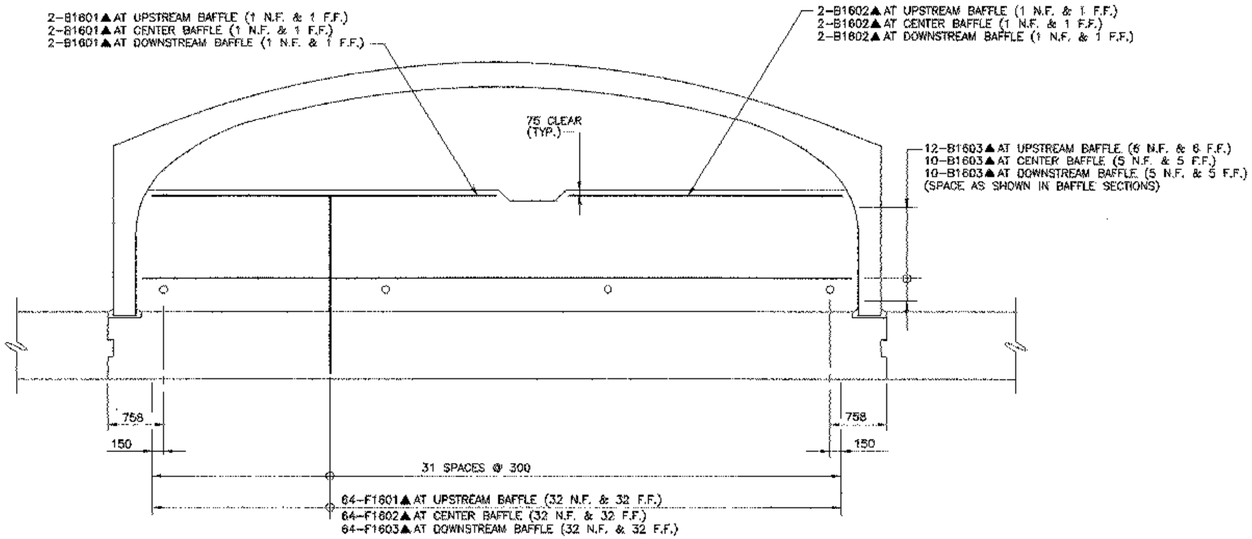

(UPSTREAM FACE OF UPSTREAM BAFFLE SHOWN)
(WEEP HOLES & REINFORCING IN FOOTING NOT SHOWN)

BAFFLE REINFORCEMENT

SCALE 1:40

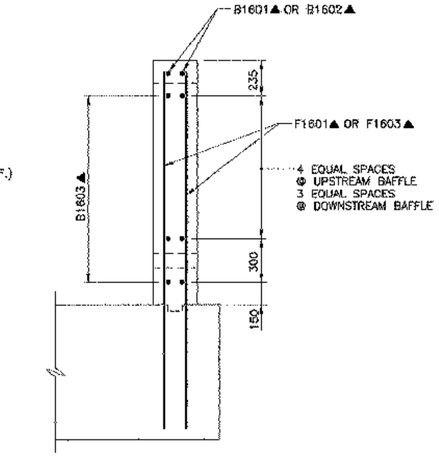

(UPSTREAM BAFFLE SHOWN –
DOWNSTREAM BAFFLE SIMILAR, BUT OPPOSITE HAND)

REINFORCEMENT AT EXTERIOR BAFFLE SECTION

SCALE 1:20

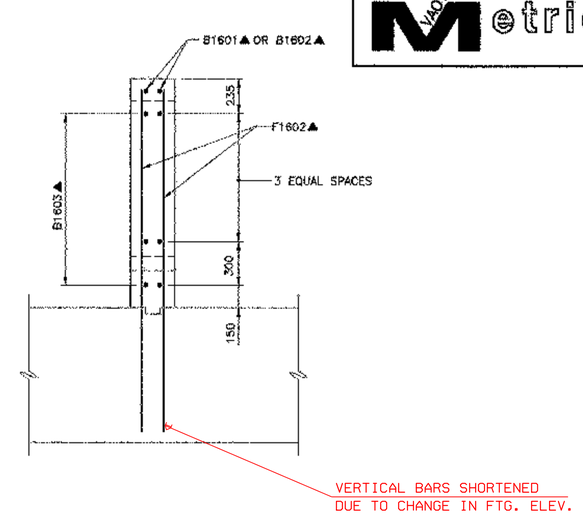

REINFORCEMENT AT CENTER BAFFLE SECTION

SCALE 1:20

REINFORCEMENT NOTES:

1. REINFORCING STEEL SHALL HAVE A CLEAR COVER OF 75 AT ALL EXPOSED SURFACES, UNLESS OTHERWISE NOTED.
2. N.F. = NEAR FACE
   F.F. = FAR FACE
   E.F. = EACH FACE
3. ▲ DENOTES BAR TO BE CUT TO FIT IN THE FIELD.
4. FOR ALL WINGWALL AND CURB DETAILS, REINFORCEMENT FOR WINGWALL #1 IS SHOWN. REINFORCEMENT FOR WINGWALLS #2, #3 & #4 SIMILAR EXCEPT FOR NOTATION (i.e. E2W1601, E3W1601, E4W1601, RESPECTIVELY, INSTEAD OF E1W1601).
5. WEEP HOLES & REINFORCING IN FOOTING NOT SHOWN FOR CLARITY.
6. THE ARCH MANUFACTURER SHALL PROVIDE A POSITIVE CONNECTION BETWEEN THE HEADWALL AND WINGWALL. THIS CONNECTION IS INTENDED TO ALLOW EXPANSION AND CONTRACTION OF THE WINGWALL, BUT PROVIDE SUPPORT FOR OVERTURNING. A HORIZONTAL NO. 5 REINFORCING BAR AT 305 ON CENTER INSTALLED IN A PVC SLEEVE IS ONE METHOD TO PROVIDE THIS CONNECTION. A DETAIL SHALL BE PROVIDED TO THE ENGINEER FOR REVIEW AS PART OF THE SHOP DRAWING SUBMITTAL.

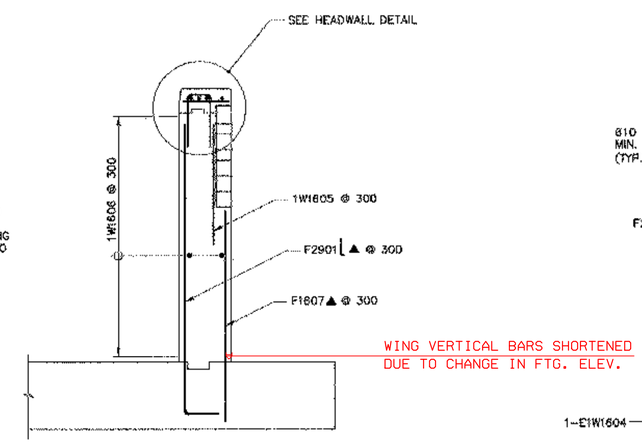

TYPICAL WINGWALL SECTION

SCALE: 1 : 40

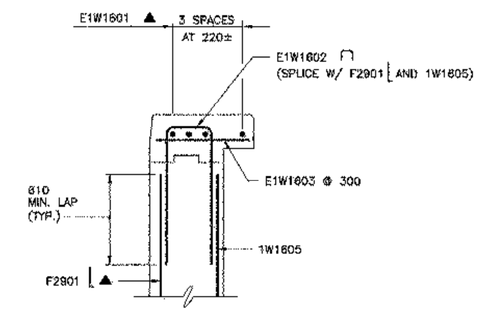

HEADWALL DETAIL

SCALE: 1 : 20

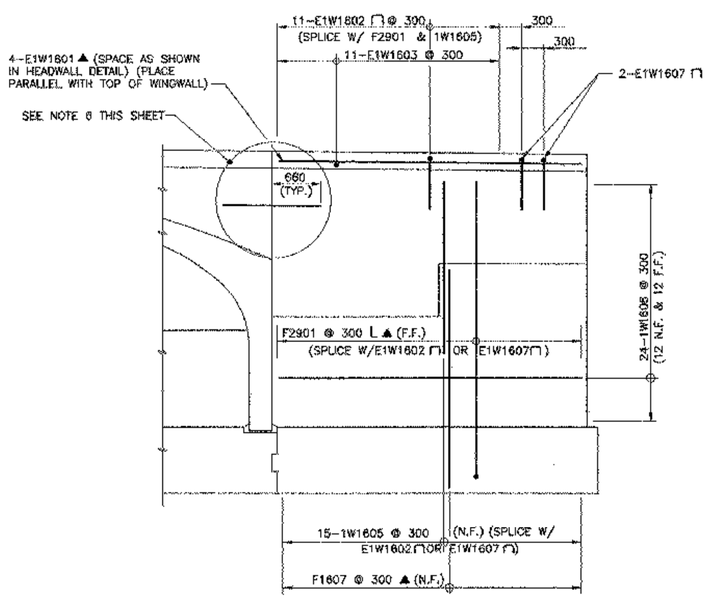

TYPICAL WINGWALL ELEVATION

SCALE: 1 : 40

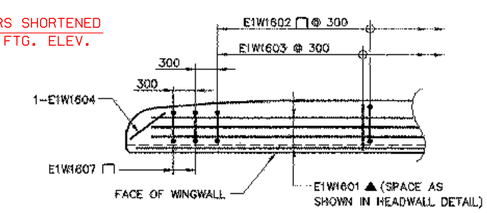

NOTE : BARS SHALL BE TURNED AS REQUIRED TO FIT FLARED ENDS

FLARED END FOR CURB

SCALE 1:40

ARCHIVED ON CADD

REVISIONS		
NO.	DESCRIPTION	BY & DATE

STATE OF VERMONT
AGENCY OF TRANSPORTATION

CLARENDON, VERMONT	Bridge No. 25
	Log Sta.
TOWN HIGHWAY NO. 10	Surv. Sta.
TOWN HIGHWAY NO. 10 OVER THE CLARENDON RIVER	
WINGWALL & BAFFLE REINFORCEMENT	
Designed by: K.L. JAMES	Drawn by: N.J. HOYT
Checked by: M.H. GALLO date 6/15/00	Bridge Design Supervisor J.W. TUCKER date
VAOT PROJECT NO. BRO 1443(27)	DK PROJECT NO. R13667F5
Bridge Sheet No.	SHEET 19 of 25

Hayashi Corporation
Consulting Engineers
22 Manchester Road
Derry, NH 03038
Phone: (603) 425-2647
Fax: (603) 425-2775

DuBois & King inc.
engineering planning management development

HC FILE J:\BRO\WGR.DWG / PLOT SCALE 1 = 40

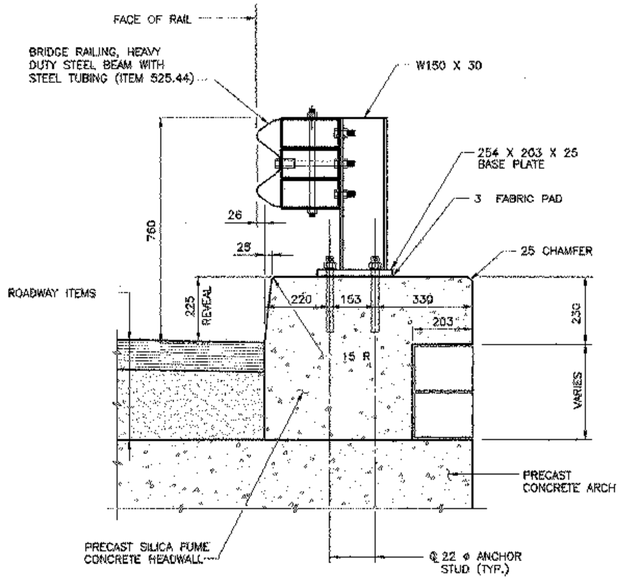

NOTES:

FOR BRIDGE RAIL AT WINGWALL, SEE TOP OF WINGWALL DETAIL, SHEET 16

SEE GENERAL NOTE NO. 27.

BRIDGE RAIL @ HEADWALL

SCALE: 1 : 10

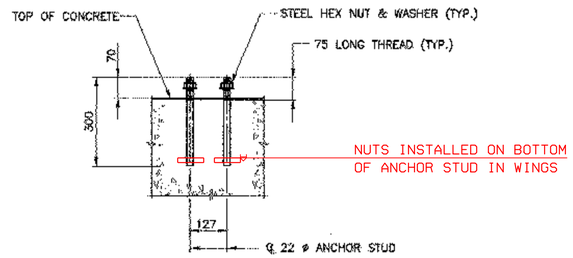

POST ANCHOR ASSEMBLY

SCALE: 1 : 10

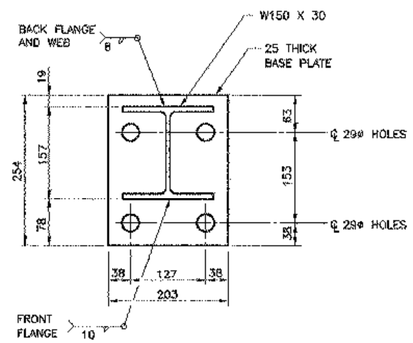

BASE PLATE DETAIL

SCALE: 1 : 5

NOTES:

1. SEE STANDARD DRAWING SB-R7-90M FOR STANDARD DETAILS AND REQUIREMENTS NOT SHOWN HERE.
2. BRIDGE RAIL (ITEM 525.44), SHALL INCLUDE POSTS, BASE PLATES, ANCHOR BOLTS, PREFORMED PADS, RAIL ASSEMBLY, BOLTS, NUTS, WASHERS, HEAVY DUTY STEEL BEAM (HDSB), TUBING, ETC. ITEM 525.44 SHALL MEET THE REQUIREMENTS OF SECTION 525 OF VAOT STANDARD SPECIFICATIONS, EXCEPT AS NOTED BELOW.
3. BASE PLATES SHALL CONFORM TO AASHTO M 270/M 270M GRADE 345 AND SHALL BE GALVANIZED AFTER FABRICATION IN ACCORDANCE WITH AASHTO M 111.
4. ANCHOR BOLTS, NUTS AND WASHERS SHALL CONFORM TO ASTM A449 AND SHALL BE GALVANIZED IN ACCORDANCE WITH AASHTO M 232.
5. ANCHOR BOLTS SHALL BE CAST INTO THE CURB OR HEADWALL, AND SHALL CONFORM WITH THE REQUIREMENTS OF VAOT STANDARD SPECIFICATION SUBSECTION 714.07, EXCEPT AS NOTED IN NOTE 4 ABOVE.
6. HOLES IN BASE PLATES SHALL BE FILLED FLUSH WITH POLYURETHANE JOINT SEALER AFTER RAIL INSTALLATION, (SUBSIDIARY TO ITEM 525.44).
7. EACH PIECE OF RAIL SHALL BE ATTACHED TO A MINIMUM OF THREE POSTS.
8. FABRIC PADS SHALL CONFORM TO AASHTO M251 AND SUBSECTION 731.01 OF VAOT STANDARD SPECIFICATIONS.
9. NUTS FOR THREADED ANCHOR BOLTS CONNECTING THE BASE PLATE TO THE CONCRETE SHALL BE TIGHTENED TO A SNUG FIT AND GIVEN AN ADDITIONAL 1/8 OF A TURN.
10. FOR BRIDGE RAIL POST SPACING, SEE GENERAL PLAN & ELEVATION ON SHEET 11.

ARCHIVED ON CADD

REVISIONS		
NO.	DESCRIPTION	BY & DATE

Hayashi Corporation
Consulting Engineers
22 Manchester Road
Derry, NH 03038
Phone: (603) 425-2647
Fax: (603) 425-2775

DuBois & King inc.
engineering planning management development

STATE OF VERMONT
AGENCY OF TRANSPORTATION

CLARENDON, VERMONT	Bridge No. 25
	Log Sta.
TOWN HIGHWAY NO. 10	Surv. Sta.
TOWN HIGHWAY NO. 10 OVER THE CLARENDON RIVER	
BRIDGE RAIL SHEET	
Designed by: K.L. JAMES	Drawn by: N.J. HOYT
Checked by: M.H. GALLO date 6/15/00	Bridge Design Supervisor J.W. TUCKER date
VAOT PROJECT NO. BRO 1443(27)	DK PROJECT NO. R13567F5
Bridge Sheet No.	SHEET 20 of 25

FILE #20GRAIL.DWG / PLOT SCALE 1 = 10

Metric

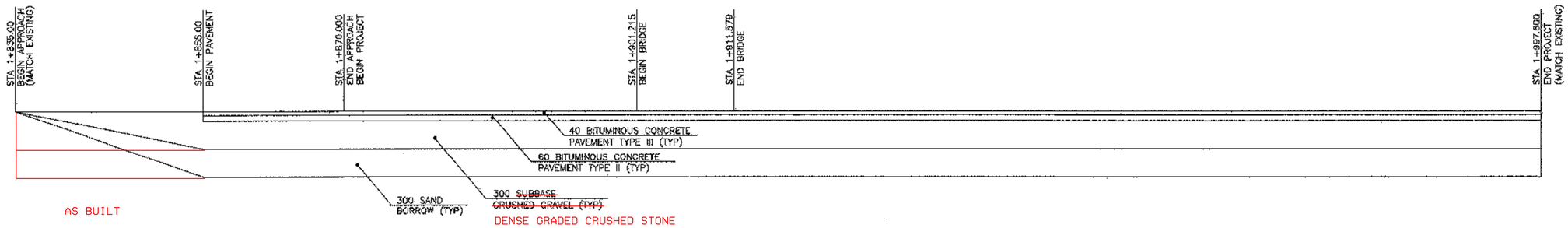

MATERIAL TRANSITION DETAIL

SCALE HORIZ. 1:250
VERT. 1:25

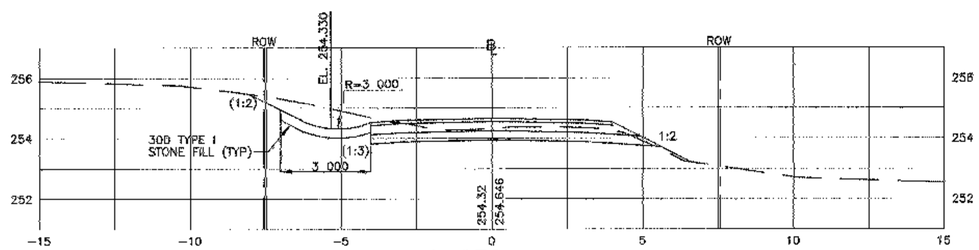

1+970

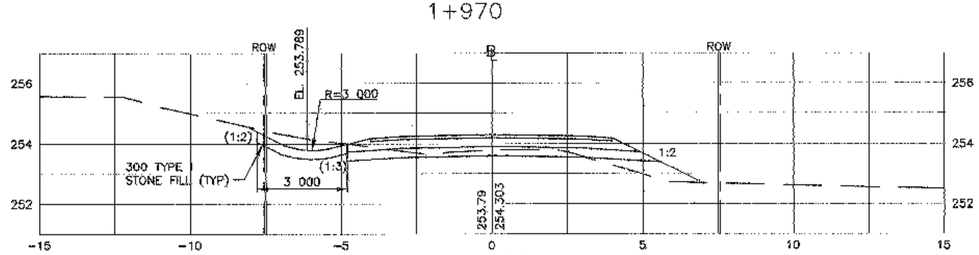

1+960

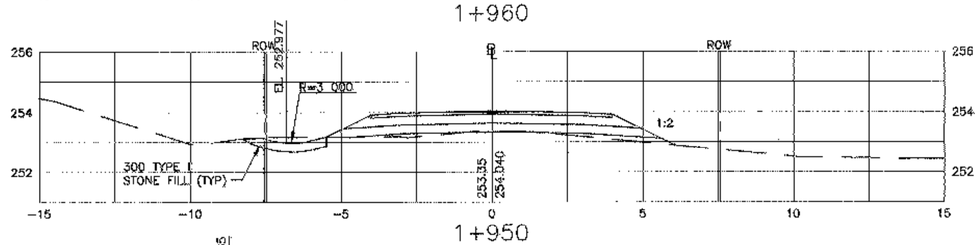

1+950

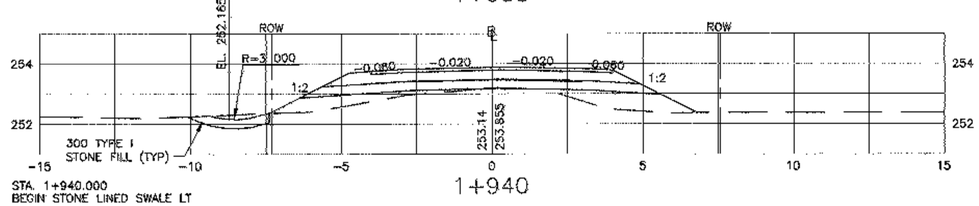

1+940

STA. 1+940.000
BEGIN STONE LINED SWALE LT

STA. 1+933.910
END HEAVY DUTY STEEL BEAM
GUARD RAIL LT

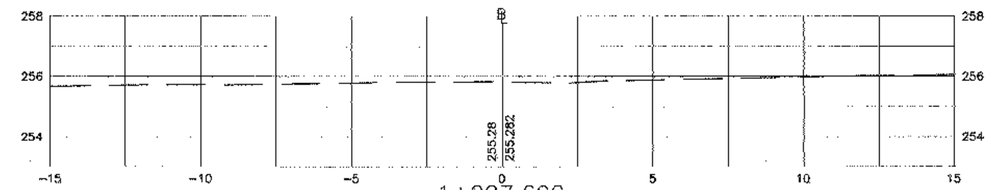

1+997.600

STA. 1+997.600
END PROJECT
BRO 1443(27)
(MATCH EXISTING)

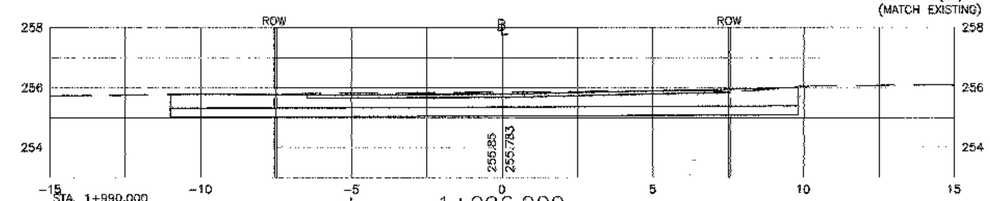

1+996.900

STA. 1+990.000
END STONE LINED SWALE LT

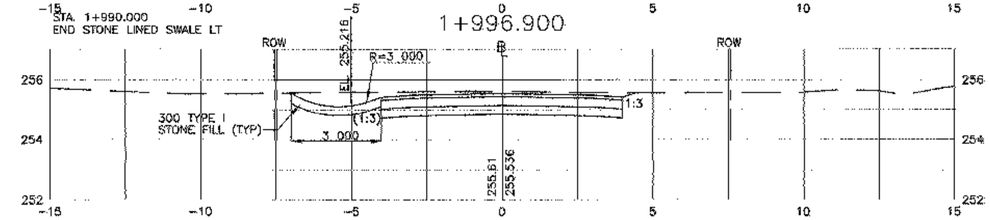

1+990

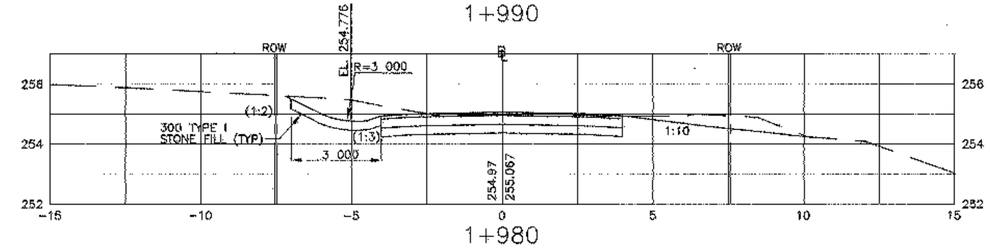

1+980

ROADWAY CROSS SECTIONS

SCALE HORIZ. 1:100 VERT. 1:100

REVISIONS		
NO.	DESCRIPTION	BY & DATE

DuBois & King inc.
engineering planning management development

STATE OF VERMONT
AGENCY OF TRANSPORTATION

CLARENDON, VERMONT	Bridge No. 25
	Log Sta.
TOWN HIGHWAY NO. 10	Surv. Sta.

TOWN HIGHWAY NO. 10 OVER THE CLARENDON RIVER

ROADWAY CROSS SECTIONS

Designed by: W.S. CHESBROUGH	Drawn by: N.B. DIMICK
Checked by: K.S. MARSHIA date	Bridge Design Supervisor J.W. TUCKER date
VAOT PROJECT NO. BRO 1443(27)	DK PROJECT NO. R13567F5
Bridge Sheet No.	SHEET 24 of 25

I:\R13567F5\dwg\FINAL\13567S2.dwg Thu Jul 08 10:38:58 2010