STATE OF VERMONT
AGENCY OF TRANSPORTATION

PRELIMINARY INFORMATION SHEET

INDEX OF SHEETS

1. TITLE SHEET
2. PRELIMINARY INFORMATION SHEET
3. PROJECT TYPICAL SECTIONS
4-5. QUANTITY SHEETS
6. R.O.W. LAYOUT SHEET
7. TIE INFORMATION
8. ALIGNMENT SHEET
9. LAYOUT SHEET
10. PROFILE SHEET
11. EXISTING TRAFFIC SIGNS LAYOUT SHEET
12. NEW TRAFFIC SIGNS AND PAVEMENT MARKINGS LAYOUT SHEET
13. TRAFFIC SIGN SUMMARY SHEET
13A. TRAFFIC CONTROL SHEET
14. EROSION CONTROL NARRATIVE
15. EXISTING CONDITIONS SITE PLAN
16. EROSION PREVENTION AND SEDIMENT CONTROL PLAN
17-19. EROSION CONTROL DETAILS
20. PLAN AND ELEVATION
21. PROJECT NOTES
22. DECK REINFORCING PLAN & BRIDGE TYPICAL SECTION
23. TRUSS REPAIRS
24. FRAMING PLAN
25. FLOOR BEAM ELEVATIONS
REV. 25A. FLOOR BEAM ELEVATIONS & LIGHT TRUSS DETAILS
26. LATERAL BRACING DETAILS
27-32. BEARING DETAILS
33. EXPANSION JOINT PLAN AND ELEVATION
34. EXPANSION JOINT DETAILS
35. DOWNSPOUT DETAILS
36. APPROACH SLAB DETAILS
37. SPECIAL PROVISION (BOX BEAM GUARDRAIL, PAINTED) LAYOUT
37A. SPECIAL PROVISION (BOX BEAM GUARDRAIL, PAINTED) DETAILS
37B. TRUSS RAILING ELEVATION
REV. 37C. TRUSS RAILING DETAILS (1)
37D. TRUSS RAILING DETAILS (2)
38. MISCELLANEOUS PROJECT DETAILS
39. EXISTING ABUTMENT CONCRETE REMOVAL DETAILS
40. ABUTMENT NO.1 DETAILS
41. ABUTMENT NO.1 STEM REINFORCING DETAILS
42. ABUTMENT NO.2 DETAILS
43. ABUTMENT NO.2 STEM REINFORCING DETAILS
44. ABUTMENT SECTIONS
45. ABUTMENT BACKWALL DETAILS
46. WINGWALL ELEVATIONS
47. REINFORCING STEEL SCHEDULE
48. BANKING DIAGRAM & MATERIAL TRANSITION DETAIL
49-53. ROADWAY CROSS SECTIONS
54-55. T.H. 66 CROSS SECTIONS
58-62. CHANNEL CROSS SECTIONS
63-85. REFERENCE SHEETS
NEW 25B. HEAVY TRUSS FLOOR BEAM TO TRUSS AT ABUT. *END DETAILS

LIST OF STANDARDS

A-80	SHARED USE PATH/HIGHWAY INTERSECTION DETAILS	3/31/2004
B-5	SLOPE GRADING, EMBANKMENTS, MUCK	6/1/1994
D-1	PRECAST REINFORCED CONCRETE PIPE DROP INLET WITH CAST IRON GRATE	6/1/1994
	PRECAST REINFORCED CONCRETE PIPE DROP INLET WITH CONCRETE COVER	
E-100	CONSTRUCTION APPROACH SIGNS	37988
E-100A	SIDE ROAD CONSTRUCTION - APPROACH SIGNS	1/2/2004
E-101	CONSTRUCTION SIGN DETAILS	5/30/2003
E-102	CONSTRUCTION SIGN DETAILS	6/30/2003
E-102A	CONSTRUCTION SIGN DETAILS	5/1/2004
E-106	TRAFFIC CONTROL - MISCELLANEOUS DETAILS	3/1/2004
E-107	DELINEATION, BARRICADES AND DETOURS FOR U-TURNS ON DIVIDED HIGHWAY	6/30/2003
E-107A	BREAKAWAY BARRICADE DETAILS	8/8/1995
E-121	STANDARD SIGN PLACEMENT - CONVENTIONAL ROAD	8/8/1995
E-123	GUIDE SIGN PLACEMENT - MISCELLANEOUS DETAILS	3/16/2004
E-131B	BICYCLE GUIDE SIGN DETAILS	5/30/2003
E-141	REGULATORY SIGN DETAILS	9/20/1995
E-142	REGULATORY SIGN DETAILS	9/20/1995
E-143	REGULATORY SIGN DETAILS	6/15/2004
E-143B	REGULATORY SIGN DETAILS	3/15/2005
E-146	REGULATORY SIGN DETAILS	9/20/1995
E-153B	WARNING SIGN DETAILS	5/30/2003
E-160	FLANGED CHANNEL STEEL SIGN POST	5/20/1999
E-164	SQUARE STEEL SIGN POST	5/20/1999
E-191	PAVEMENT MARKING DETAILS	36192
E-193	PAVEMENT MARKING DETAILS	8/18/1995
E-195	SHARE USE PATH PAVEMENT MARKINGS AND SIGN DETAILS	2/6/2004

FINAL HYDRAULIC REPORT

HYDROLOGIC DATA

Date: August 24, 2005

DRAINAGE AREA : 202.6 sq. mi.
CHARACTER OF TERRAIN : Steeply sloped woodlands
STREAM CHARACTERISTICS : Sinuous with moderate flood plane
NATURE OF STREAMBED : Sand and gravel

PEAK FLOW DATA

Q 2.33 =	2,000 cfs	Q 50 =	6,020 cfs
Q 10 =	3,500 cfs	Q 100 =	7,500 cfs
Q 25 =	4,800 cfs	Q 500 =	13,000 cfs

DATE OF FLOOD OF RECORD : November 1927
ESTIMATED DISCHARGE: 24,000 cfs
WATER SURFACE ELEV.: Unknown
NATURAL STREAM VELOCITY : @ Q25 = 3.9 fps
ICE CONDITIONS : Moderate
DEBRIS: Moderate
DOES THE STREAM REACH MAXIMUM HIGHWATER ELEV. RAPIDLY? No
IS ORDINARY RISE RAPID? No
IS STAGE AFFECTED BY UPSTREAM OR DOWNSTREAM CONDITIONS? Yes
IF YES, DESCRIBE: 100 year backwater from the Connecticut River extends 500' upstream of bridge 81.

WATERSHED STORAGE: >1% HEADWATERS:
UNIFORM: x
IMMEDIATELY ABOVE SITE:

EXISTING STRUCTURE INFORMATION

STRUCTURE TYPE: Steel Thru Truss
YEAR BUILT: 1929
CLEAR SPAN(NORMAL TO STREAM): 96.5'
VERTICAL CLEARANCE ABOVE STREAMBED: 22'
WATERWAY OF FULL OPENING: 2,075 sq. ft.
DISPOSITION OF STRUCTURE: Rehabilitation
TYPE OF MATERIAL UNDER SUBSTRUCTURE: Unknown

WATER SURFACE ELEVATIONS AT:

Q2.33 =	293.1'	VELOCITY =	4.7 fps
Q10 =	297.8'	"	3.9 fps
Q25 =	300.9'	"	3.9 fps
Q50 =	303.8'	"	3.8 fps
Q100 =	305.8'	"	4.1 fps

LONG TERM STREAMBED CHANGES: Unknown

IS THE ROADWAY OVERTOPPED BELOW Q100: No
FREQUENCY:
RELIEF ELEVATION: 309.3'
DISCHARGE OVER ROAD @Q100:

UPSTREAM STRUCTURE

TOWN: Springfield DISTANCE: 9,750'
HIGHWAY# : TH 430 (Bridge St) STRUCTURE #: Br 43
CLEAR SPAN: 117' CLEAR HEIGHT: 13'
YEAR BUILT: 1989 FULL WATERWAY: 1213 sq. ft.
STRUCTURE TYPE: Single Span Plate Girder

DOWNSTREAM STRUCTURE

TOWN: Springfield DISTANCE: 3,850'
HIGHWAY# : VT 11 STRUCTURE #: Br 66
CLEAR SPAN: 255' CLEAR HEIGHT: 16'
YEAR BUILT: 1966 FULL WATERWAY: 4150 sq. ft.
STRUCTURE TYPE: 3-Span Welded Girder

LOAD FACTOR LOAD RATING (TONS)

LOADING LEVELS (LOAD FACTOR)	TRUCK						
	H	HS	3S2	6 AXLE	3A. STR.	4A. STR.	5A. SEMI
INVENTORY A=2.17; B=1.00	32	37					
POSTED A=1.55; B=1.40	45	52	63		48	50	59
OPERATING A=1.30; B=1.67		62	72	152	57	59	

STRENGTH RF = $\frac{\phi M_N - 1.3 M_{DL}}{A \times M_{LL+I}}$ SERVICEABILITY RF = $B \left[\frac{.95 F_y S_{LL+I} - M_{DL} \frac{S_{LL+I}}{S_{DL}} - M_{SDL} \frac{S_{LL+I}}{S_{SDL}}}{1.67 M_{LL+I}} \right]$

MEMBERS OF LIGHT TRUSS CONTROL LOAD RATING.

TRAFFIC DATA

YEAR	ADT	DHV	% D	% T	ADTT
2005	290	40	66	6	20
2025	390	50	66	6	30

20 year ESAL for flexible pavement from 2005 to 2025 : 141,000
40 year ESAL for flexible pavement from 2005 to 2045 : 323,000
Design Speed : 35 mph

PROPOSED STRUCTURE

STRUCTURE TYPE: Rehabilitation of Existing Truss with 6" facing on both abutments

CLEAR SPAN(NORMAL TO STREAM): 95.5'
VERTICAL CLEARANCE ABOVE STREAMBED: 23'
WATERWAY OF FULL OPENING: 2,110 sq. ft.

WATER SURFACE ELEVATIONS AT:

Q2.33 =	293.1'	VELOCITY=	4.7 fps
Q10 =	297.8'	"	3.9 fps
Q25 =	300.9'	"	3.9 fps
Q50 =	303.8'	"	3.8 fps
Q100 =	305.8'	"	4.1 fps

IS THE ROADWAY OVERTOPPED BELOW Q100: No
FREQUENCY:
RELIEF ELEVATION: 309.3'
DISCHARGE OVER ROAD @Q100:

AVERAGE LOW ELEVATION OF SUPERSTRUCTURE: 308.6'
VERTICAL CLEARANCE: @ Q25 = 7.7'

SCOUR: 4.0' of contraction scour @ Q500

REQUIRED CHANNEL PROTECTION: Stone Fill Type IV

PERMIT INFORMATION

AVERAGE DAILY FLOW:	420 cfs	DEPTH OR ELEVATION:
ORDINARY LOW WATER:	185 cfs	Elev= 288.0'
ORDINARY HIGH WATER:	860 cfs	Elev= 295.0'

TEMPORARY BRIDGE REQUIREMENTS

STRUCTURE TYPE: n/a
CLEAR SPAN (NORMAL TO STREAM):
VERTICAL CLEARANCE ABOVE STREAMBED:
WATERWAY AREA OF FULL OPENING:

ADDITIONAL INFORMATION

This bridge is presently closed. During construction, traffic will continue to use detour established by Town of Springfield.

DESIGN CRITERIA

1. DESIGN LIVE LOAD AASHTO HS20-44
2. DESIGN SPAN 160 FT.
3. ALLOWABLE LOAD FOR SPREAD FOOTINGS ON SOIL N/A
   ON LEDGE N/A
4. ALLOWABLE LOAD FOR PILING N/A
   TYPE N/A
   ESTIMATED LENGTH N/A
5. STRUCTURAL STEEL AASHTO M270M/M270 GRADE M270 GRADE 50 (PAINTED)
6. REINFORCING STEEL GRADE 60
7. CONCRETE, HIGH PERFORMANCE CLASS A f'c: 4000 psi
   CONCRETE, HIGH PERFORMANCE CLASS B f'c: 3500 psi
   SELF-CONSOLIDATING CONCRETE f'c: 3500 psi
8. DESIGN SOIL UNIT WEIGHT 140 pcf
9. DESIGN LOAD FOR SPREAD FOOTINGS ON SOIL N/A

TRAFFIC MAINTENANCE

1. IS TRAFFIC TO BE MAINTAINED? NO
   IF YES, ON EXISTING STRUCTURE? N/A
   OR ON TEMPORARY BRIDGE? N/A
   ONE OR TWO-WAY TRAVEL? N/A
2. TRAFFIC CONTROL SIGNALS REQUIRED? N/A
3. ARE SIDEWALKS REQUIRED? N/A
   IF SO, ON WHAT SIDE? N/A

PROJECT NAME: **SPRINGFIELD**
PROJECT NUMBER: **BHO 1442(30)**

FILE NAME: **96j348\structures\s96j348pi.xls** PLOT DATE: **12/19/2007**
PROJECT MANAGER: **R.R. WHITCOMB** DRAWN BY: **G. ROY**
DESIGNED BY: **C. CARLSON** CHECKED BY: **C. CARLSON**
PRELIMINARY INFORMATION SHEET SHEET **2** OF **85**

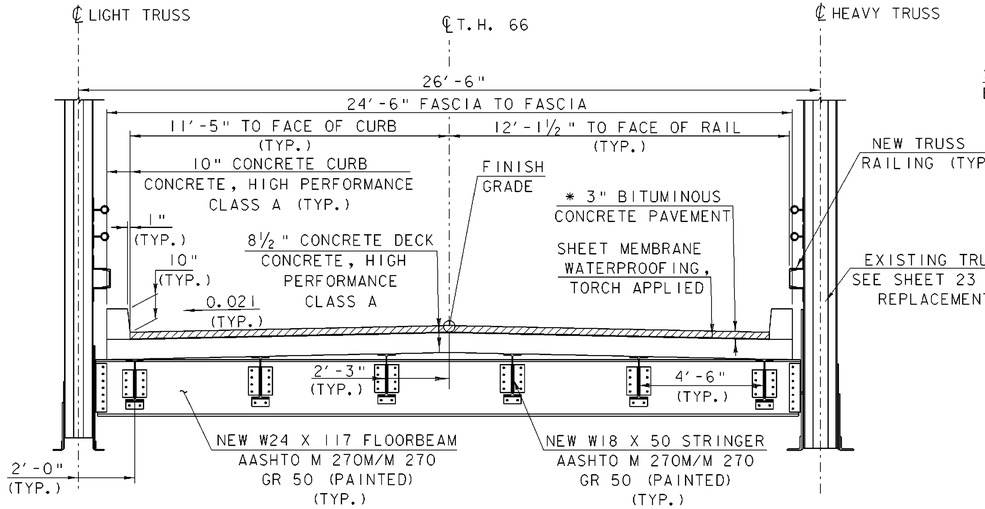

* 1½" TYPE III OR IV OVER 1½" TYPE III OR IV

BRIDGE TYPICAL SECTION

1 0 1 2 3 4 5

SCALE: ⅜" = 1'-0"

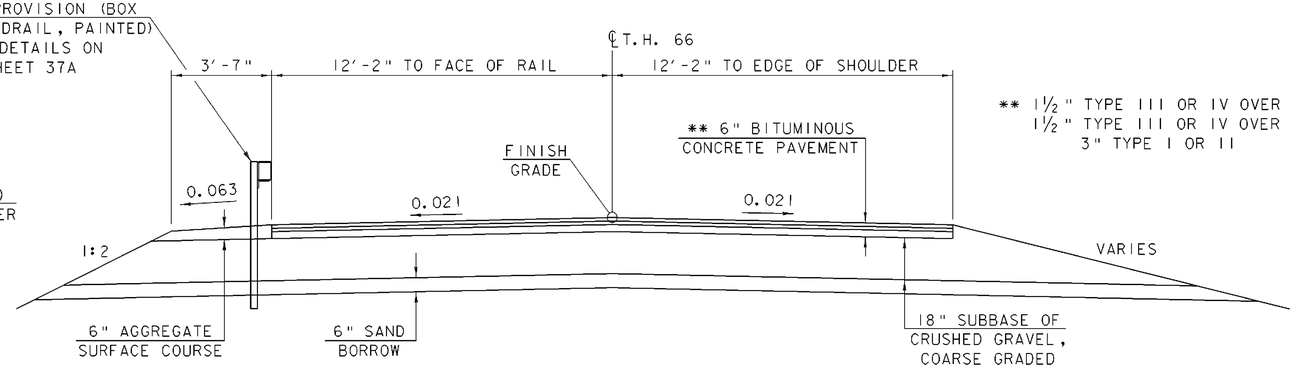

** 1½" TYPE III OR IV OVER 1½" TYPE III OR IV OVER 3" TYPE I OR II

T.H. 66 ROADWAY TYPICAL SECTION

1 0 1 2 3 4 5

SCALE: ⅜" = 1'-0"

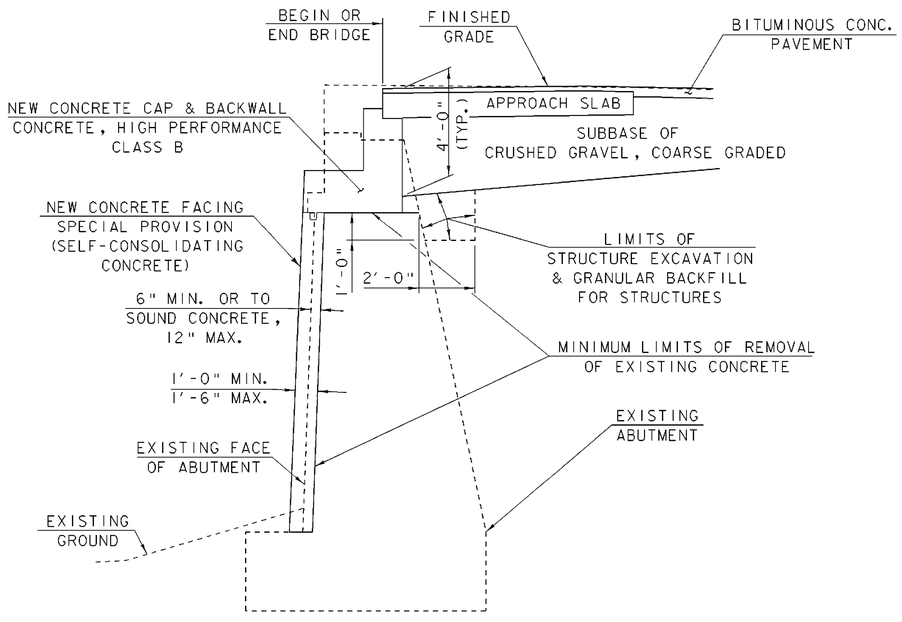

ABUTMENT EARTHWORK TYPICAL SECTION

NTS

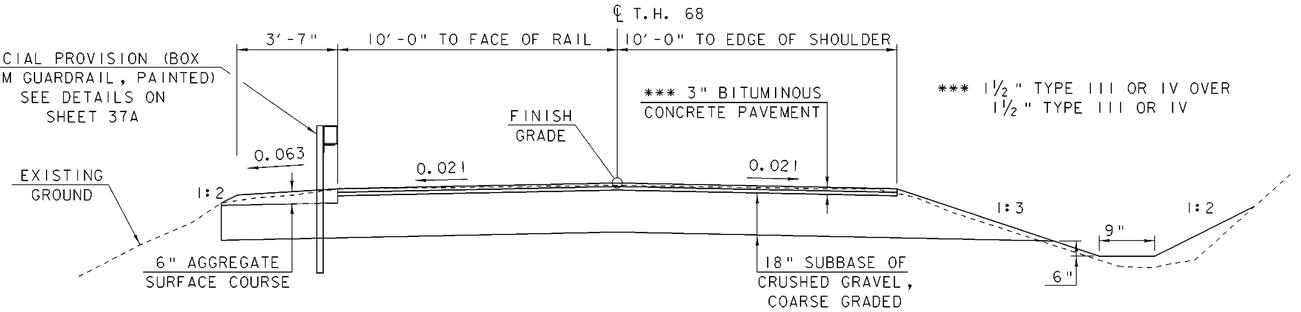

*** 1½" TYPE III OR IV OVER 1½" TYPE III OR IV

T.H. 68 ROADWAY TYPICAL SECTION

1 0 1 2 3 4 5

SCALE: ⅜" = 1'-0"

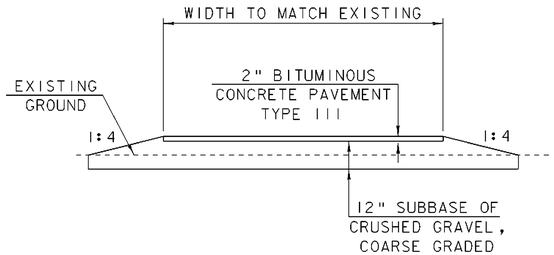

BIKE PATH TYPICAL SECTION

1 0 1 2 3 4 5

SCALE: ⅜" = 1'-0"

MATERIAL ITEM	TOLERANCE
PAVEMENT	±¼" TOTAL THICKNESS
BASE COURSE	±½"
SUBBASE	± 1"
SAND BORROW	± 1"

PROJECT TYPICAL SECTIONS

PROJECT NAME: SPRINGFIELD
PROJECT NUMBER: BHO 1442(30)

FILE NAME: 96J348/str/s96j348typ.dgn
PROJECT MANAGER: R. R. WHITCOMB
DESIGNED BY: J. PERRIGO
s96j348typ.1

PLOT DATE: 27-DEC-2007
DRAWN BY: J. PERRIGO
CHECKED BY: C. CARLSON
SHEET 3 OF 85

STATE OF VERMONT
AGENCY OF TRANSPORTATION

QUANTITY SHEET #1

SUMMARY OF ESTIMATED QUANTITIES

FULL E &C	ROADWAY	EROSION CONTROL	TRAINING	ABUT. NO. 1	ABUT. NO. 2	APPROACH SLAB NO. 1	APPROACH SLAB NO. 2	BRIDGE	BRIDGE QUANTITY	ROUND	GRAND TOTAL	FINAL	UNIT	ITEMS	ITEM NUMBER
	1										1	1	LS	CLEARING AND GRUBBING, INCLUDING INDIVIDUAL TREES & STUMPS	201.10
	750										750	679.70	CY	COMMON EXCAVATION	203.15
	80										80	70.70	CY	SAND BORROW	203.31
	20	10									30	21.10	CY	TRENCH EXCAVATION OF EARTH	204.20
	10										10	0	CY	TRENCH EXCAVATION OF ROCK	204.21
								30	30		30	41.25	CY	STRUCTURE EXCAVATION	204.25
								30	30		30	41.25	CY	GRANULAR BACKFILL FOR STRUCTURES	204.30
	180										180	183.33	SY	COLD PLANING, BITUMINOUS PAVEMENT	210.10
	680	10									690	715.10	CY	SUBBASE OF CRUSHED GRAVEL, COARSE GRADED	301.25
	30										30	30.34	CY	AGGREGATE SURFACE COURSE	401.10
	2.6					0.1	0.1	0.6	0.8		3.4	3.4	CWT	EMULSIFIED ASPHALT	404.65
	320					9	9	69	87		407	440.88	TON	BITUMINOUS CONCRETE PAVEMENT (PG 58-28)	406.25
				3				117	120		120	118.14	CY	CONCRETE, HIGH PERFORMANCE CLASS A	501.33
				63	42	23	23		151		151	313.44	CY	CONCRETE, HIGH PERFORMANCE CLASS B	501.34
								1	1		1	1	LS	SHORING SUPERSTRUCTURE	502.10
								103330	103330		103330	98196	LB	STRUCTURAL STEEL, ROLLED BEAM	506.50
								4970	4970		4970	4650	LB	STRUCTURAL STEEL, PLATE GIRDER	506.55
								54760	54760		54760	67692	LB	STRUCTURAL STEEL	506.60
				11280	8830				20110		20110	21109	LB	REINFORCING STEEL	507.15
				310	270				580		580	641	LF	DRILLING AND GROUTING DOWELS	507.16
				710	160	3020	3020	24190	31100		31100	31193	LB	EPOXY COATED REINFORCING STEEL	507.17
								1	1		1	1	LS	SHEAR CONNECTORS (1770 - 7/8" X 6")	508.15
								1	1		1	1	LS	STRUCTURAL PAINTING, SHOP APPLIED (80 TONS)	513.25
								1	1		1	1	LS	STRUCTURAL PAINTING, FIELD APPLIED (40 TONS)	513.30
								1	1		1	1	LS	CONTAINMENT & ENVIRONMENTAL PROTECTION, FIELD	513.36
								1	1		1	1	LS	SURFACE PREPARATION, SHOP (80 TONS)	513.40
								1	1		1	1	LS	SURFACE PREPARATION, FIELD (40 TONS)	513.41
					10		10	5	25		25	25	GAL	WATER REPELLENT, SILANE	514.10
								38	38		38	40.5	LF	BRIDGE EXPANSION JOINT, ASPHALTIC PLUG	516.10
								38	38		38	38	LF	BRIDGE EXPANSION JOINT, VERMONT	516.11
								438	438		438	411.44	SY	SHEET MEMBRANE WATERPROOFING, TORCH APPLIED	519.20
								440	440		440	433.8	SY	REMOVAL OF BRIDGE PAVEMENT	529.10
								1	1		1	1	EACH	PARTIAL REMOVAL OF STRUCTURE	529.20
				83	65				148		148	159.79	CY	REMOVAL OF CONCRETE OR MASONRY	529.25
								12	12		12	12	EACH	BEARING DEVICE ASSEMBLY, PREFORMED FABRIC PAD	531.10
								4	4		4	4	EACH	BEARING DEVICE ASSEMBLY, STEEL	531.13
														BEGIN OPTION AA	
	40										40	0	LF	18" CSP .064 (2-2/3 X 1/2)	601.0015
	40										40	0	LF	18" RCP CLASS III	601.0815
	40										40	40	LF	18" CPEP (SL)	601.2615
														END OPTION AA	
	1										1	0	EACH	PRC REINFORCED CONCRETE DROP INLET w/ CAST IRON GRATE	604.18

DETAILED SUMMARY OF QUANTITIES

QUANTITIES	UNIT	ITEMS
		TEMPORARY EROSION CONTROL ITEMS
		(INCLUDED UNDER EROSION CONTROL)
10	CY	ITEM 204.20 TRENCH EXCAVATION OF EARTH
10	CY	ITEM 301.25 SUBBASE OF CRUSHED GRAVEL, COARSE GRADED
10	HR	ITEM 608.25 ALL PURPOSE EXCAVATOR RENTAL, TYPE I
10	CY	ITEM 613.10 STONE FILL, TYPE I
70	SY	ITEM 649.51 GEOTEXTILE FOR SILT FENCE
230	SY	ITEM 649.61 GEOTEXTILE FOR FILTER CURTAIN
10	LB	ITEM 651.17 SEED, WINTER RYE
1	TON	ITEM 651.25 HAYMULCH
80	SY	ITEM 653.20 TEMPORARY EROSION MATTING

EARTHWORKS SUMMARY

		FILL AVAILABLE:
750	CY	COMMON EXCAVATION: 750 * 1.0
18	CY	TRENCH EXCAVATION OF EARTH: 30 * 0.6
6	CY	TRENCH EXCAVATION OF ROCK: 10 * 0.6
18	CY	STRUCTURE EXCAVATION: 30 * 0.6
792	CY	SUBTOTAL
8	CY	ROUNDING
800	CY	TOTAL
800	CY	FILL AVAILABLE
20	CY	FILL REQUIRED
780	**CY**	**WASTE**

PROJECT NAME: **SPRINGFIELD**
PROJECT NUMBER: **BHO 1442(30)**

FILE NAME: **s96j348qs.xls**
PROJECT MANAGER: **R. WHITCOMB**
DESIGNED BY: **J. PERRIGO**
QUANTITY SHEET #1

PLOT DATE: **12/18/2007**
DRAWN BY: **L. BULLOCK**
CHECKED BY: **C. CARLSON**
SHEET **4** OF **85**

STATE OF VERMONT
AGENCY OF TRANSPORTATION

QUANTITY SHEET #2

SUMMARY OF ESTIMATED QUANTITIES

FULL E &C		ROADWAY		EROSION CONTROL		TRAINING		ABUT. NO. 1		ABUT. NO. 2		APPROACH SLAB NO. 1	APPROACH SLAB NO. 2		BRIDGE
				10											
		30		10											
		3													
		76													
		2													
		400													
1															
1															
1															
1															
1															
						520									
		1													
		1													
		100													
		110													
		42													
		8													
		80													
				70											
				230											
				50											
				10											
				200											
				1											
				1											
				80											
				1											
				50											
				1											
				80											
				10											
				30											
				1											
				700											
		56.4													
		109													
		109													
		21													
								61		52					113
		253													

TOTALS

ROUND	GRAND TOTAL	FINAL
	10	7
	40	65.17
	3	3
	76	122
	2	2
	400	0
	1	1
	1	1
	1	1
	1	1
	1	0.725
	520	520
	1	1
	1	1
	100	100
	110	816
	42	47
	8	8
	80	87.80
	70	76.66
	230	231.10
	50	50
	10	10
	200	200
	1	1
	1	0.40
	80	72.65
	1	1
	50	71
	1	0.904
	80	202.30
	10	0
	30	20.74
	1	1
	700	869.00
	56.4	57.90
	109	100.66
	109	0
	21	21
	113	0
	253	252.60

DESCRIPTIONS

UNIT	ITEMS	ITEM NUMBER
HR	ALL PURPOSE EXCAVATOR RENTAL, TYPE I	608.25
CY	STONE FILL, TYPE I	613.10
EA	BOLLARDS	619.14
LF	REMOVAL AND DISPOSAL OF GUARDRAIL	621.80
EA	GUIDE POSTS	621.85
HR	FLAGGERS	630.15
LS	FIELD OFFICE, ENGINEERS	631.10
LS	TESTING EQUIPMENT, CONCRETE	631.16
LS	TESTING EQUIPMENT, BITUMINOUS	631.17
LS	TESTING EQUIPMENT, PROTECTIVE COATINGS	631.18
LU	FIELD OFFICE TELEPHONE (NABI)	631.25
HR	EMPLOYEE TRAINEESHIP	634.10
LS	MOBILIZATION / DEMOBILIZATION	635.11
LS	TRAFFIC CONTROL	641.10
LF	4 INCH WHITE LINE	646.20
LF	4 INCH YELLOW LINE	646.21
LF	24 INCH STOP BAR	646.26
EACH	LETTER OR SYMBOL	646.30
SY	GEOTEXTILE UNDER STONE FILL	649.31
SY	GEOTEXTILE FOR SILT FENCE	649.51
SY	GEOTEXTILE FOR FILTER CURTAIN	649.61
LB	SEED	651.15
LB	SEED, WINTER RYE	651.17
LB	FERTILIZER	651.18
TON	AGRICULTURAL LIMESTONE	651.20
TON	HAYMULCH	651.25
CY	TOPSOIL	651.35
LS	EPSC PLAN	652.10
HR	MONITORING EPSC PLAN	652.20
LU	MAINTENANCE OF EPSC PLAN (NABI)	652.30
SY	TEMPORARY EROSION MATTING	653.20
CY	TEMPORARY STONE CHECK DAM, TYPE I	653.25
CY	VEHICLE TRACKING PAD	653.35
EA	INLET PROTECTION DEVICE, TYPE I	653.40
LF	PROJECT DEMARCATION FENCE	653.55
SF	TRAFFIC SIGNS, TYPE A	675.20
	BEGIN OPTION BB	
LF	FLANGED CHANNEL SIGN POST	675.301
LF	SQUARE TUBE SIGN POST AND ANCHOR	675.341
	END OPTION BB	
EACH	REMOVING SIGNS	675.50
CY	SPECIAL PROVISION (SELF-CONSOLIDATING CONCRETE)	900.608
LF	SPECIAL PROVISION (BOX BEAM GUARDRAIL, PAINTED)	900.640

DETAILED SUMMARY OF QUANTITIES

QUANTITIES	UNIT	ITEMS
		NABI = NOT A BID ITEM

PROJECT NAME: **SPRINGFIELD**
PROJECT NUMBER: **BHO 1442(30)**

FILE NAME: **s96j348qs.xls**
PROJECT MANAGER: **R. WHITCOMB**
DESIGNED BY: **J. PERRIGO**
QUANTITY SHEET #2

PLOT DATE: **12/18/2007**
DRAWN BY: **L. BULLOCK**
CHECKED BY: **C. CARLSON**
SHEET **5** OF **85**

RECONSTRUCT BIKE PATH
STA. 10+91.16 LT.

RECONSTRUCT T.H. 68 APPROACH
STA. 11+51.75 RT.

CONSTRUCT PAVED APRON
STA. 13+60.53 LT.

SPECIAL PROVISION (BOX BEAM GUARDRAIL, PAINTED)
STA. 10+90.45 LT. - STA. 11+69.49 LT.
T.H.68 STA. 30+65.07 LT. - STA. 12+01.49 RT.
STA. 13+29.49 LT. - STA. 13+47.20 LT.
STA. 13+61.49 RT. - STA. 14+49.20 RT.

GUIDE POSTS
STA. 10+90.20 LT.
STA. 13+47.91 LT.

REMOVAL AND DISPOSAL OF GUARDRAIL
STA. 11+17.70 LT. - STA. 11+64.90 RT.
STA. 11+89.20 RT. - STA. 11+94.20 RT.
STA. 13+34.30 LT. - STA. 13+45.00 LT.

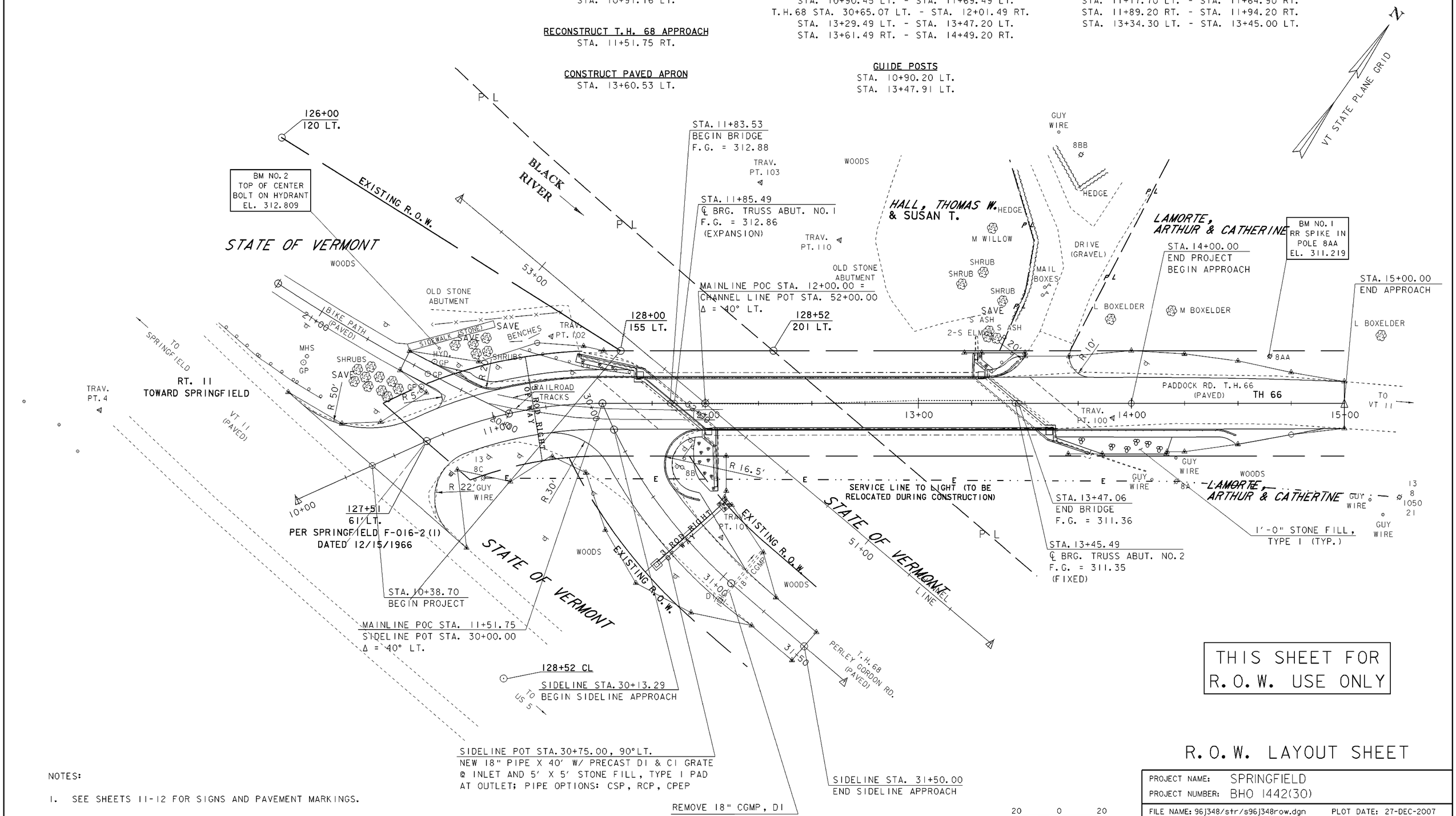

THIS SHEET FOR R.O.W. USE ONLY

NOTES:

1. SEE SHEETS 11-12 FOR SIGNS AND PAVEMENT MARKINGS.

R.O.W. LAYOUT SHEET

PROJECT NAME: SPRINGFIELD	
PROJECT NUMBER: BHO 1442(30)	
FILE NAME: 96j348/str/s96j348row.dgn	PLOT DATE: 27-DEC-2007
PROJECT MANAGER: R.R. WHITCOMB	DRAWN BY: G. ROY
DESIGNED BY: G. ROY	CHECKED BY: C. CARLSON
96j348/str/s96j348row.i	SHEET 6 OF 85

GPS CONTROL POINTS

HVCTRL #1

DESIGNATION

"A98001"

** N = 283994.4600
E = 1649011.6700
ELEV. = 326.960

GENERAL LOCATION, SPRINGFIELD, VT. TO REACH FROM THE INTERSECTION OF U.S.ROUTE 5 SOUTH AND VT ROUTE 11 GO NORTHWEST ALONG VT ROUTE 11 FOR 1.5 MI (2.4 KM) TO THE SITE OF THE MARK ON THE RIGHT, ABOUT MIDWAY BETWEEN AND ON THE OPPOSITE SIDE OF THE ROAD FROM POLES 56 AND 57. THE MARK IS SET 3 CM BELOW GROUND SURFACE IN THE TOP OF A 30 CM DIAMETER CONCRETE MONUMENT POURED 1.3 M (4.3 FT) DEEP. IT IS 1.1 M (3.6 FT) NORTHEAST OF AND ABOUT LEVEL WITH THE NORTHEAST EDGE OF PAVEMENT OF VT ROUTE 11, 6.2 M (20.3 FT) SOUTHWEST OF THE CENTERLINE OF A GRAVEL RECREATIONAL PATH, AND 1.1 M (3.6 FT) SOUTHEAST OF A FIBERGLASS WITNESS POST. NOTE, MARK IS INTERVISIBLE WITH MARK A98002.

HVCTRL #2

DESIGNATION

"A98002"

** N = 282429.0500
E = 1650496.4000
ELEV. = 344.870

GENERAL LOCATION, SPRINGFIELD, VT. TO REACH FROM THE INTERSECTION OF U.S.ROUTE 5 SOUTH AND VT ROUTE 11 GO NORTHWEST ALONG VT ROUTE 11 FOR 1.9 MI (3.1 KM) TO A SMALL CONCRETE BRIDGE OVER SEAVERS BROOK AND THE MARK ON THE LEFT IN THE TOP OF THE NORTHWEST END OF THE CONCRETE HEADWALL OF THE BRIDGE. IT IS BETWEEN THE SPRINGFIELD WASTE WATER TREATMENT FACILITY AND LAVALLEYS SPRINGFIELD BUILDING SUPPLY. TO REACH FROM THE INTERSECTION OF VT ROUTE 11, PARK STREET, AND VT ROUTE 143 IN SPRINGFIELD GO SOUTHEAST ALONG VT ROUTE 11 FOR 1.6 MI (2.6 KM) TO THE SITE OF THEMARK. THE MARK IS 4.0 M (13.1 FT) SOUTHWEST OF AND ABOUT 1.0 M (3.3 FT) LOWER THAN THE SOUTHWEST EDGE OF PAVEMENT OF VT ROUTE 11, 0.35 M (1.15 FT) SOUTHEAST OF THE NORTHWEST END OF THE HEADWALL, 0.15 M (0.49 FT) NORTHEAST OF THE SOUTHWEST FACE OF THE HEADWALL, AND 1.0 M (3.3 FT) WEST OF A FIBERGLASS WITNESS POST. NOTE, MARK IS INTERVISIBLE WITH MARK A98001.

* DESCRIPTION PROVIDED BY VERMONT AGENCY OF TRANSPORTATION GEODETIC SURVEY UNIT

TRAVERSE TIES

HVCTRL #4

NORTH = 280817.5104
EAST = 1652380.3464
ELEV. = 318.030

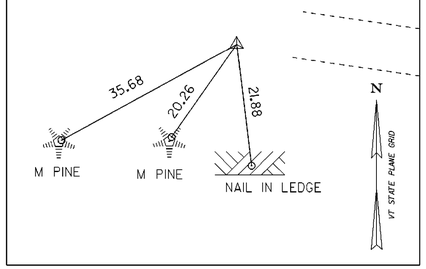

HVCTRL #5

NORTH = 281234.1461
EAST = 1652993.4986
ELEV. = 306.237

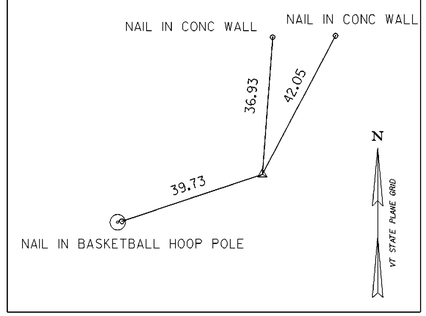

* MAIN TRAVERSE COMPLETED: JAN. 21, 2005 BY R.GILMAN PC, P.WINTERS

ALIGNMENT TIES

MAINLINE POB
STA. 10+00.00
N = 280836.7990
E = 1652480.2083

MAINLINE PC
STA. 10+66.73
N = 280894.3026
E = 1652514.0646

MAINLINE PT
STA. 11+51.42
N = 280956.1614
E = 1652570.9859

MAINLINE POE
STA. 15+00.00
N = 281157.3337
E = 1652855.6518

SIDELINE PC
STA. 30+00.00
N = 280956.3517
E = 1652571.2553

SIDELINE PT
STA. 31+04.80
N = 280922.2932
E = 1652669.3247

SIDELINE POE
STA. 31+50.00
N = 280917.9252
E = 1652714.3158

CHANNEL LINE POB
STA. 50+25.00
N = 280969.7003
E = 1652785.0541

CHANNEL LINE POE
STA. 53+50.00
N = 280996.6203
E = 1652461.1709

DATUM
VERTICAL NAVD 88
HORIZONTAL NAD 83(1986)
ADJUSTMENT COMPASS

TIE INFORMATION

PROJECT NAME: SPRINGFIELD
PROJECT NUMBER: BHO 1442(30)

FILE NAME: 96j348/str/s96j348tie.dgn
PROJECT MANAGER: R.R. WHITCOMB
DESIGNED BY: G. ROY
s96j348tie.i

PLOT DATE: 27-DEC-2007
DRAWN BY: J. HULETT
CHECKED BY: P. BEYOR
SHEET 7 OF 85

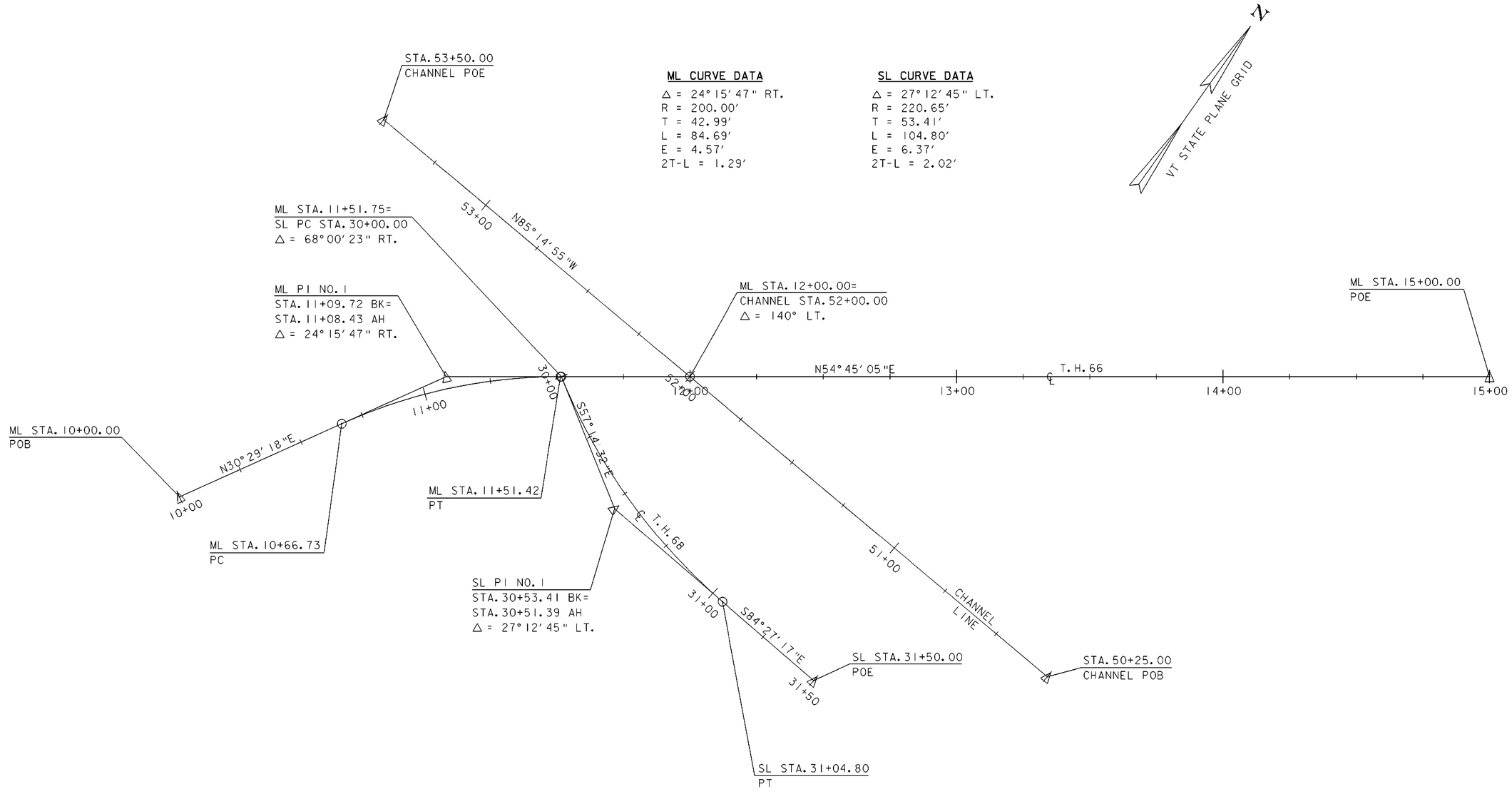

ALIGNMENT SHEET

20 0 20

SCALE: 1" = 20′-0"

PROJECT NAME:	SPRINGFIELD
PROJECT NUMBER:	BHO 1442(30)

FILE NAME: 96J348\structures\s96J348all.1	PLOT DATE: 27-DEC-2007
PROJECT MANAGER: R. R. WHITCOMB	DRAWN BY: G. ROY
DESIGNED BY: G. ROY	CHECKED BY: C. CARLSON
s96J348all.1	SHEET 8 OF 85

RECONSTRUCT BIKE PATH
STA. 10+91.16 LT.

RECONSTRUCT T.H. 68 APPROACH
STA. 11+51.75 RT.

CONSTRUCT PAVED APRON
STA. 13+60.53 LT.

SPECIAL PROVISION (BOX BEAM GUARDRAIL, PAINTED)
STA. 10+90.45 LT. - STA. 11+69.49 LT.
T.H.68 STA. 30+65.07 LT. - STA. 12+01.49 RT.
STA. 13+29.49 LT. - STA. 13+47.20 LT.
STA. 13+61.49 RT. - STA. 14+49.20 RT.

GUIDE POSTS
STA. 10+90.20 LT.
STA. 13+47.91 LT.

REMOVAL AND DISPOSAL OF GUARDRAIL
STA. 11+17.70 LT. - STA. 11+64.90 RT.
STA. 11+89.20 RT. - STA. 11+94.20 RT.
STA. 13+34.30 LT. - STA. 13+45.00 LT.

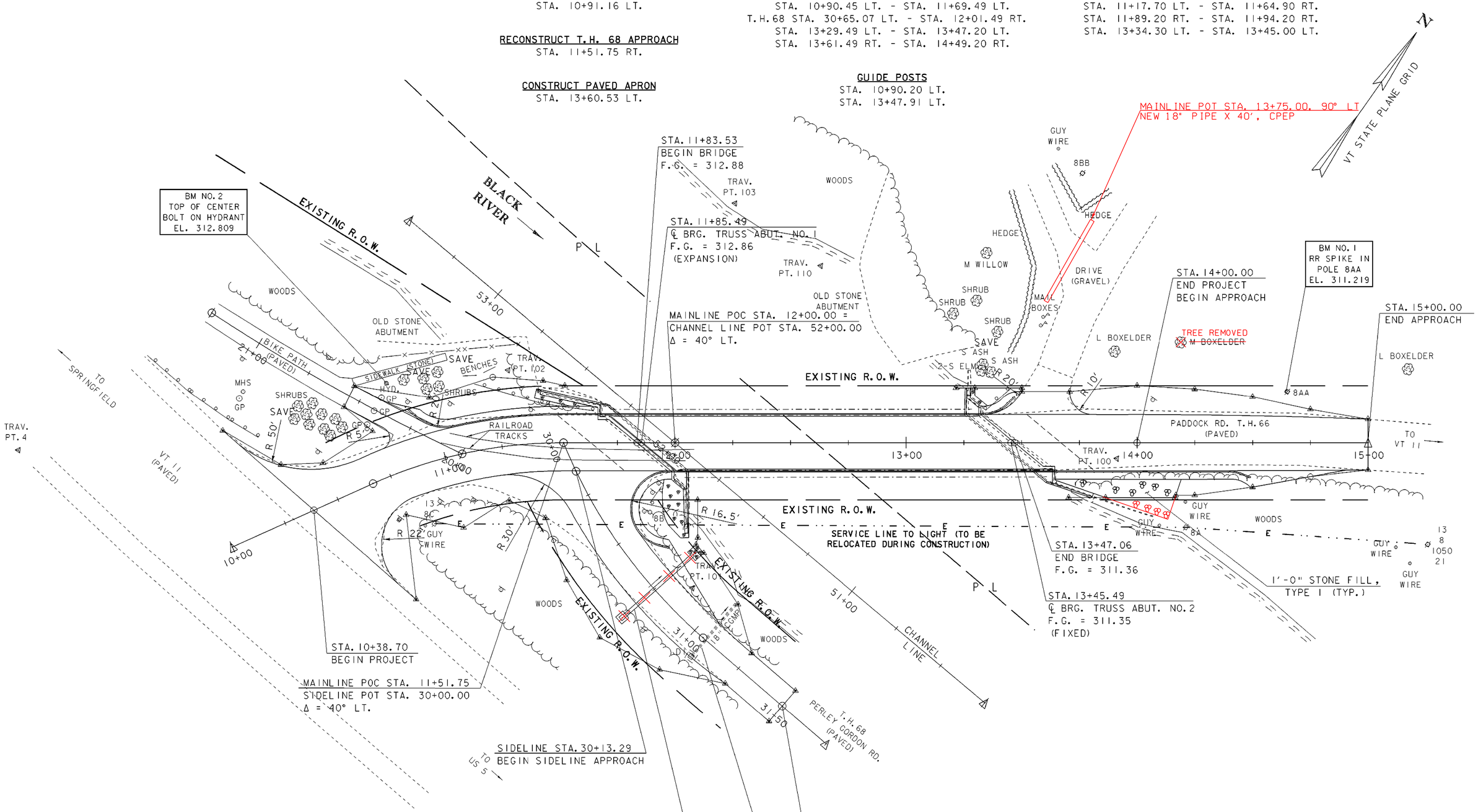

NOTES:

1. SEE SHEETS 11-12 FOR SIGNS AND PAVEMENT MARKINGS.

LAYOUT SHEET

PROJECT NAME: SPRINGFIELD	
PROJECT NUMBER: BHO 1442(30)	
FILE NAME: 96j348/str/s96j348bdr.dgn	PLOT DATE: 27-DEC-2007
PROJECT MANAGER: R.R. WHITCOMB	DRAWN BY: G. ROY
DESIGNED BY: G. ROY	CHECKED BY: C. CARLSON
s96j348101.i	SHEET 9 OF 85

Profile Along T.H. 66

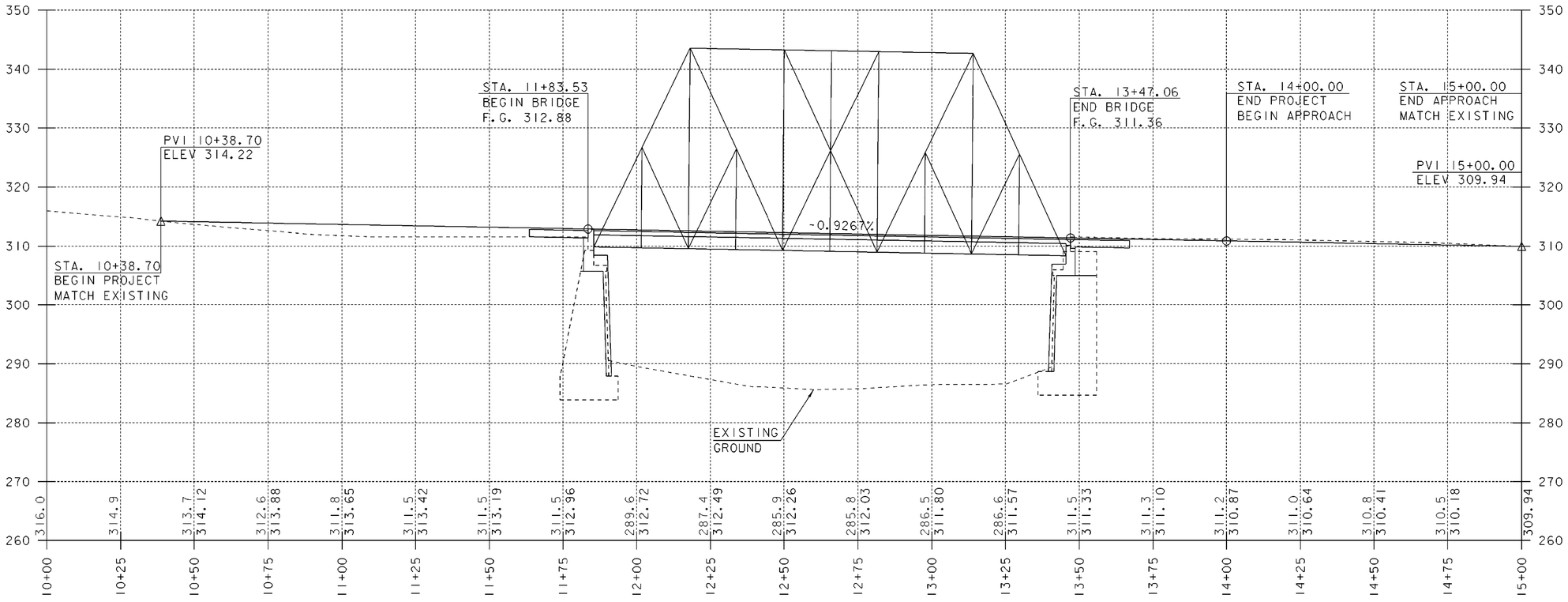

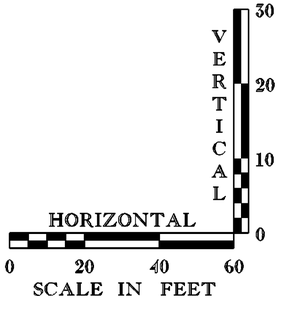

NOTE:
ELEVATIONS SHOWN TO THE NEAREST TENTH ARE EXISTING GROUND.
ELEVATIONS SHOWN TO THE NEAREST HUNDREDTH ARE FINISH GRADE.

PROFILE SHEET

PROJECT NAME: SPRINGFIELD
PROJECT NUMBER: BHO 1442(30)

FILE NAME: 96j348/str/sj348xsl.dgn
PROJECT MANAGER: R. WHITCOMB
DESIGNED BY: J. PERRIGO
96sj348pf.i

PLOT DATE: 27-DEC-2007
DRAWN BY: J. PERRIGO
CHECKED BY: G. ROY
SHEET 10 OF 85

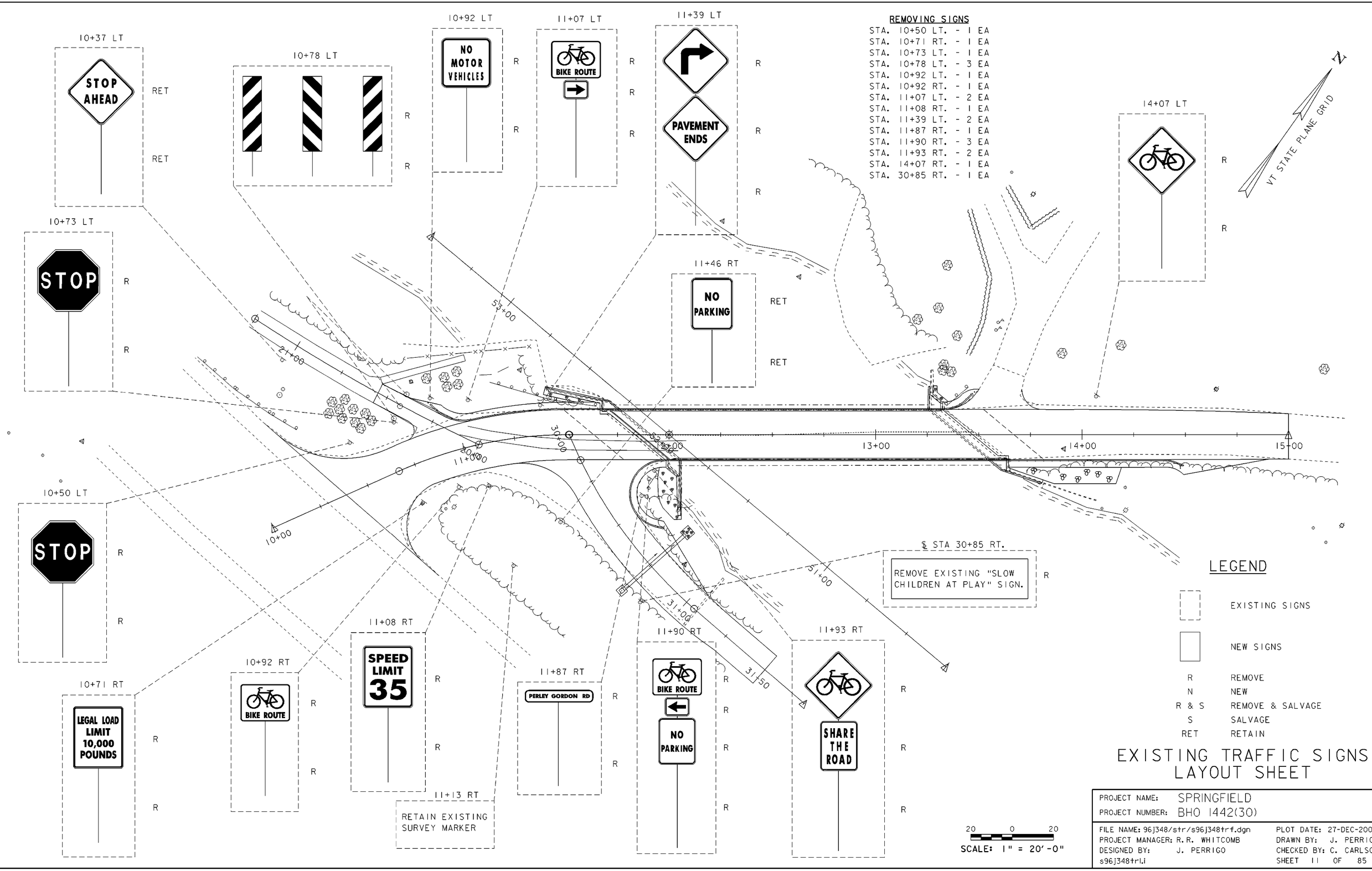

EXISTING TRAFFIC SIGNS LAYOUT SHEET

PROJECT NAME:	SPRINGFIELD
PROJECT NUMBER:	BHO 1442(30)

FILE NAME: 96j348/str/s96j348trf.dgn	PLOT DATE: 27-DEC-2007
PROJECT MANAGER: R.R. WHITCOMB	DRAWN BY: J. PERRIGO
DESIGNED BY: J. PERRIGO	CHECKED BY: C. CARLSON
s96j348trl.i	SHEET 11 OF 85

10+98 LT

FRONT VIEW

SIDE VIEW

NO MOTOR VEHICLES

BIKE ROUTE

N N N N

10+79 LT
(PAID AS ITEM 619.14, "BOLLARDS")

TYPE II OBJECT MARKERS

N N

10+73 LT

STOP

N N

4 INCH WHITE LINE
STA. 10+25 LT. - 10+68 LT.
STA. 10+65 RT. - 10+83 RT.

4 INCH YELLOW LINE
STA. 10+42 CL. - ~~10+75~~ 14+50 CL. (DOUBLE)
STA. 20+32 CL. - 20+52 CL.

24 INCH STOP BAR
STA. 10+42 LT. - 15'
STA. 20+31 LT. - 5'
STA. 30+25 LT. - 27'

LETTER OR SYMBOL
STA. 10+53 LT. "STOP"
STA. 30+36 LT. "STOP"

14+07 LT

N N

VT STATE PLANE GRID

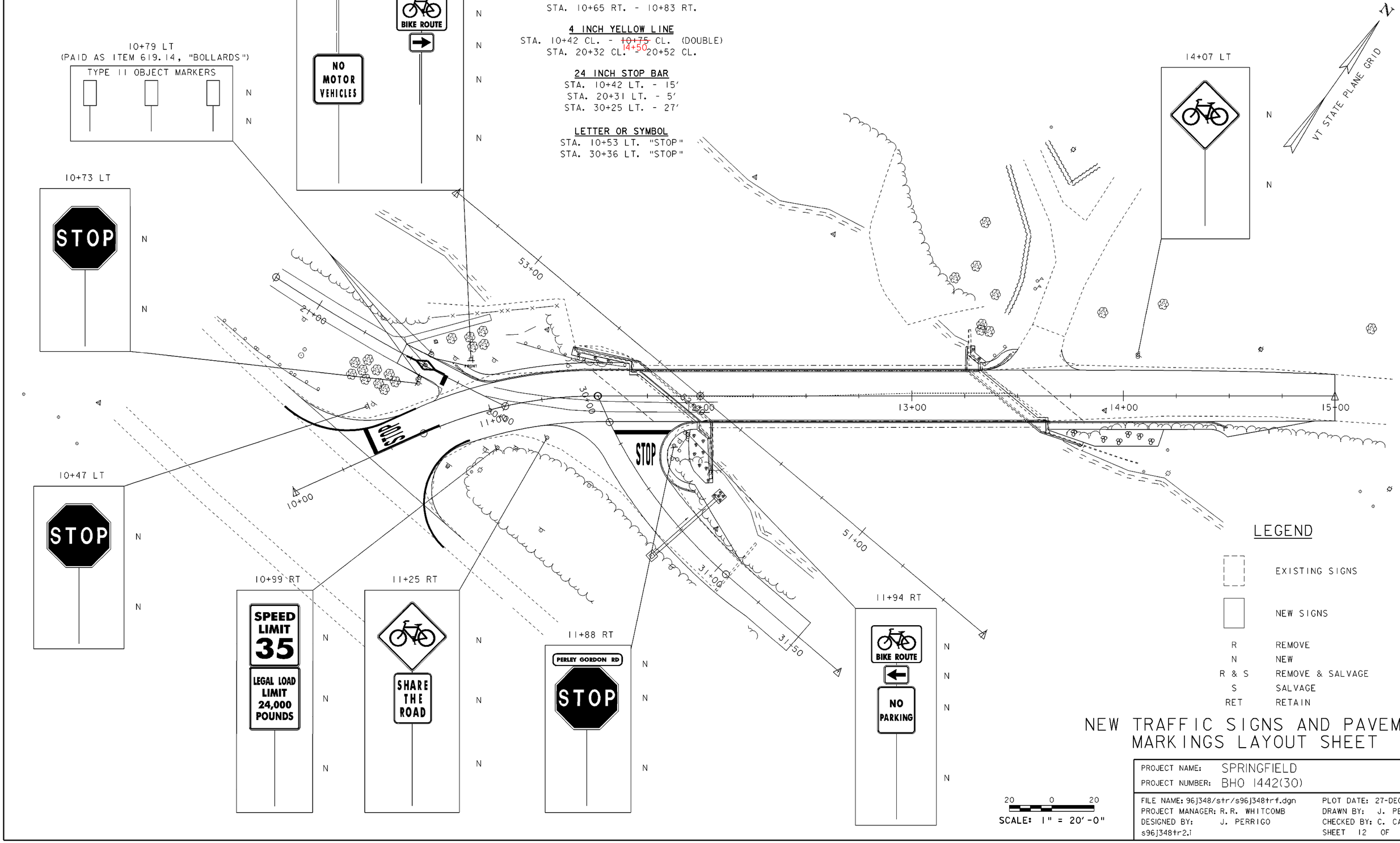

10+47 LT

STOP

N N

10+99 RT

SPEED LIMIT 35

LEGAL LOAD LIMIT 24,000 POUNDS

N N N

11+25 RT

SHARE THE ROAD

N N N

11+88 RT

PERLEY GORDON RD

STOP

N N N

11+94 RT

BIKE ROUTE

NO PARKING

N N N N

LEGEND

	EXISTING SIGNS
	NEW SIGNS
R	REMOVE
N	NEW
R & S	REMOVE & SALVAGE
S	SALVAGE
RET	RETAIN

NEW TRAFFIC SIGNS AND PAVEMENT MARKINGS LAYOUT SHEET

20 0 20
SCALE: 1" = 20'-0"

PROJECT NAME: SPRINGFIELD
PROJECT NUMBER: BHO 1442(30)

FILE NAME: 96j348/str/s96j348trf.dgn
PROJECT MANAGER: R.R. WHITCOMB
DESIGNED BY: J. PERRIGO
s96j348tr2.i

PLOT DATE: 27-DEC-2007
DRAWN BY: J. PERRIGO
CHECKED BY: C. CARLSON
SHEET 12 OF 85

STATE OF VERMONT
AGENCY OF TRANSPORTATION

TRAFFIC SIGN SUMMARY SHEET

MILEMARKER, STATION, OR SIGN NUMBER	SIGN LEGEND (FOR ALL POST LENGTHS SEE ORIGINAL RECORD PLANS)	SIGN DIMENSIONS EA	WIDTH (in)	HEIGHT (in)	NEW & SALVAGED SIGNS "A"	"B"	SALV SIGN	SALV TIS	EXIST POST RETAIN	EXIST POST SALVAGE	NEW SIGN POSTS NO. OF POSTS	FLANGED CHANNEL lb/ft 1.12	2.0	3.0	SQUARE STEEL (in) lb/ft 1.75 1.88	2.0 2.16	2.5 3.35	ANCHOR	SLEEVE	TUBULAR ALUMINUM Ø (in) lb/ft 3.0 1.3	4.0 1.7	4.0 MOD 1.7	FOUNDATION	TUBULAR STEEL Ø (in) lb/ft 3.0 7.6	3.5 9.0	4.0 10.8	5.0 14.6	W-SHAPE STEEL FTG. SIZE 24"	30"	WEIGHT	POST SIZE	SIGN FRAME REQUIRED	REMARKS	SIGN DETAIL DETAIL ON SHEET NUMBER	STD. SHEET NUMBER
												OPTION ITEMS																									
10+47 LT.	STOP	1	30	30	6.25						1			X			X	X																RI-1		E-143
10+73 LT.	STOP	1	18	18	2.25						1			~~X~~			X	X																RI-1 USED EXISTING POST		E-143
10+79 LT.		~~6~~ 3	6	12	~~3.0~~ ~~1.5~~						3																							USE WOOD BOLLARDS, ITEM 619.14 SEE STANDARD A-80 OM2-2V		A-80
10+98 LT.	BIKE ROUTE	1	24	18	3.0						1			X			X	X																DII-1		E-131B
		1	12	9	0.75																												M7-1		E-131B
10+74 LT.	NO MOTOR VEHICLES	1	24	24	4.0																												R5-3		E-143B
10+99 RT.	SPEED LIMIT 35	1	24	30	5.0						1			X			X	X																R2-1 USED EXISTING POST		E-142
	LEGAL LOAD LIMIT 24,000 POUNDS	1	24	30	5.0																												VR-017		E-141
11+25 RT.		1	24	24	4.0						1			X			X	X																WII-1		E-153B
	SHARE THE ROAD	1	18	24	3.0																												WI6-1		E-153B
11+88 RT.	PERLEY GORDON RD	1	42	9	2.63						1			X			X	X																D3-1 (MOUNT PERPENDICULAR TO STOP SIGN)		E-123
	STOP	1	30	30	6.25																												RI-1		E-143
11+94 RT.	BIKE ROUTE	1	24	18	3.0						1			X			X	X																DII-1		E-131B
		1	12	9	0.75																												M7-1		E-131B
	NO PARKING	1	24	30	5.0																												R8-3		E-146
14+07 LT.		1	24	24	4.0						1			X			X	X																WII-1		E-153B
												FT	FT	FT ~~100.66~~ ~~109~~	FT	FT	FT ~~0~~ ~~109~~		EA	LB	LB	LB		LB	LB	LB	LB								
TOTALS		SF ~~56.4~~ 57.90	SF	EA.	SF							FT ~~109~~ 100.66			FT ~~109~~ 0					LB			EA.	LB				EA.	EA.	LB					

FINAL POST LENGTHS ARE TO BE DETERMINED IN THE FIELD. POST SIZES ARE COMPUTED BASED ON INFORMATION FURNISHED ON THE STANDARD SHEETS AND THE TRAFFIC & SAFETY DIVISION'S "SIGN POST DESIGN GUIDELINE."

TRAFFIC SIGN SUMMARY SHEET

PROJECT NAME: SPRINGFIELD
PROJECT NUMBER: BHO 1442(30)

FILE NAME: 96J348/str/s96J348tss.dgn
PROJECT MANAGER: R. R. WHITCOMB
DESIGNED BY: J. PERRIGO
s96J348tss.i

PLOT DATE: 27-DEC-2007
DRAWN BY: J. PERRIGO
CHECKED BY: C. CARLSON
SHEET 13 OF 85

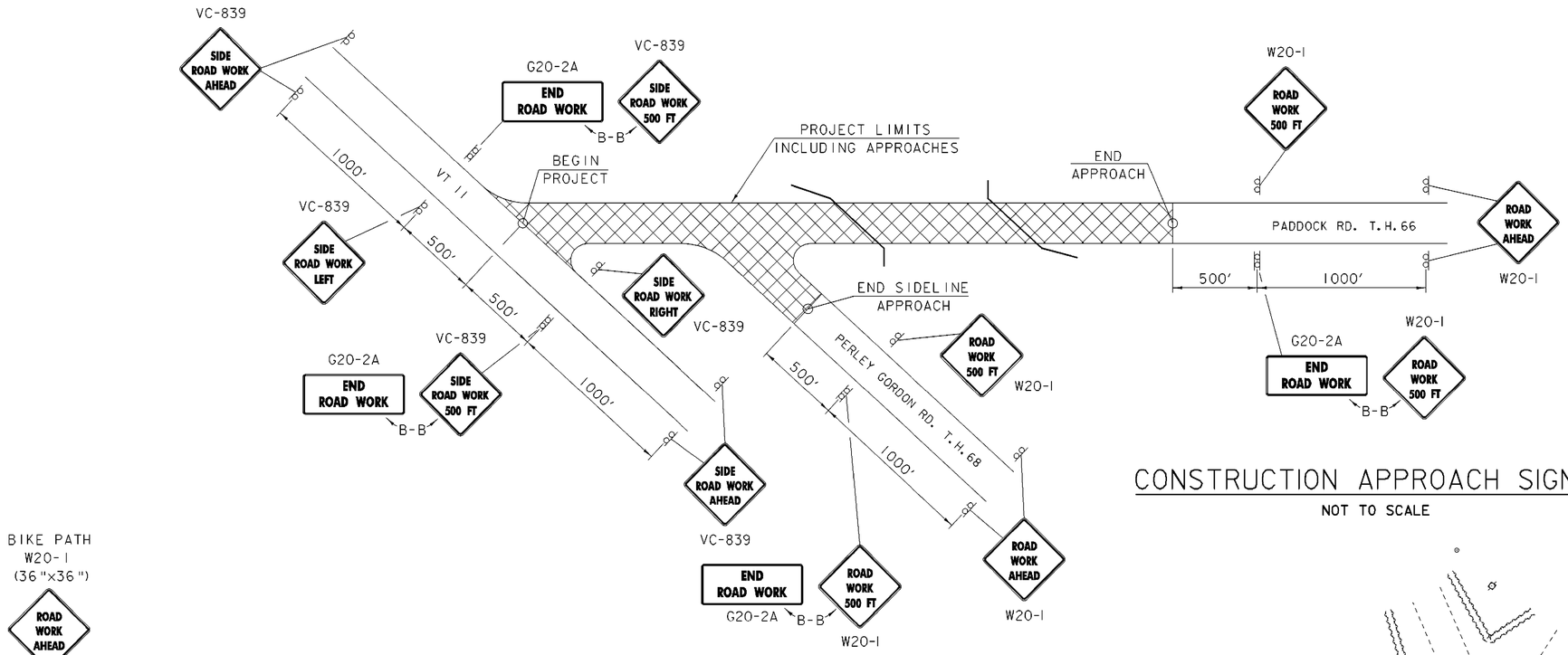

CONSTRUCTION APPROACH SIGNING

NOT TO SCALE

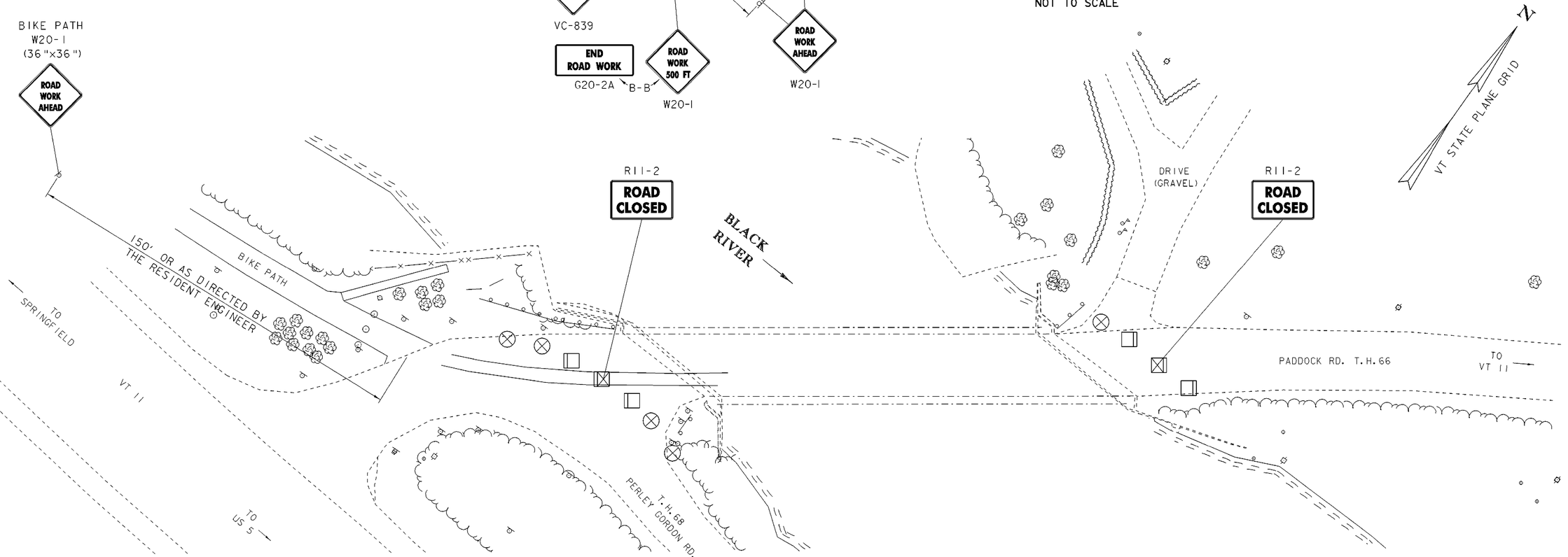

TRAFFIC CONTROL SHEET

LEGEND

- TYPE III BARRICADE
- TYPE III BARRICADE (MODIFIED)
- REFLECTORIZED BARRELS

20 0 20

SCALE: 1" = 20'-0"

PROJECT NAME: SPRINGFIELD
PROJECT NUMBER: BHO 1442(30)

FILE NAME: 96j348/str/s96j348tc.dgn
PROJECT MANAGER: R. R. WHITCOMB
DESIGNED BY: G. ROY
s96j348tc.i

PLOT DATE: 27-DEC-2007
DRAWN BY: G. ROY
CHECKED BY: C. CARLSON
SHEET 13A OF 85

STATE OF VERMONT
AGENCY OF TRANSPORTATION

EROSION CONTROL NARRATIVE

DESCRIPTION OF PROJECT

This project involves the reconstruction of a bridge over the Black River. The project is on TH#66, Paddock Road, a paved town highway, in the Town of Springfield. An existing, single span, steel truss bridge will be rehabilitated on the existing alignment while traffic is maintained by a detour. The existing abutments will remain in place with repairs being made to the bridge seats and facing.

Total roadway approach work, including three approaches, is approximately 580 feet.

No 'Threatened & Endangered Species,' or Wetlands, have been identified in the project area.

Archeological and historic resources have been identified in the project area, including the bridge.

It is anticipated that this project will last approximately two construction seasons.

Total disturbed area (including both on-site and contiguous waste, borrow, staging and haul roads) is equal to 0.36 acres. Should the area of disturbance change and result in 1 or more acres of earth disturbance, or should the project become part of a common plan of development, then the contractor will be responsible for additional permitting with the Agency of Natural Resources.

SITE INVENTORY & ANALYSIS

OFF SITE DRAINAGE CHARACTERISTICS:
The property surrounding the project site consists of well established vegetation, gently to steeply sloping land. The project lies close to the intersection of T.H. 66, T.H. 68 and VT 11. Due to the nature of the surrounding terrain, runoff water entering the project site will be primarily limited to that which is conveyed along roadway ditches and curbing.

DRAINAGE, WATERWAYS, BODIES OF WATER:
The area surrounding the project site is very flat with the exception of the river banks. There are no obvious natural drainage ways within the project area except for the Black River. The Black River bisects the project site. There are no other water bodies or wetlands within the project area. The Black River is straight, non braided and non anabranched.

TOPOGRAPHY, EXISTING ROADS, BUILDINGS, UTILITIES:
The topography of the project site is flat and open along the western side of the project and flat and wooded to the east. Development along Paddock Road consists of residential zoning. There is a residence on the eastern side of the project but the house is set well back from the construction limits.
The project is intersected by T.H. 68 a paved town highway and VT 11 a paved state highway. The project will include approach work on T.H. 68. VT 11 will not be affected by the project. Overhead utility service is present at the site but will not be affected by the project. There is an old abutment on the project site from a past bridge that consists of laid up stone.

VEGETATION:
Vegetation within the project limits consists of a mix of brush, small trees and mature trees along the river bank. No fields or agricultural crops exist near the project. Impacts to vegetation will be limited to the south eastern quadrant of the project where minimal clearing and grubbing will occur.

SOILS:
The Soil Conservation Service has mapped the soils throughout Windsor County. There are several soil types identified within the project site.

The soil type identified on the southern river bank is Macomber-Taconic complex. It is present in 25-70% slopes and very rocky. The soil is considered to be highly erodible with a K-factor of 0.39.

The soil type identified on the northern river bank is Hinckley Loamy Fine Sand. It is present in 0-8% slopes. The soil is considered to be potentially highly erodible with a K-factor of 0.30.

Generally, K-values indicate the following: 0.0 - 0.23 = low erodibility; 0.24 - 0.36 = moderate erodibility; 0.37 and higher = higher erodibility.

SENSITIVE RESOURCE AREAS:
No 'Threatened & Endangered Species' have been identified within the project limits. There will be no adverse effect to Historic features. Two archaeological areas have been identified: one site to the west of wingwall 3 and one site to the east of Wingwall 4. See sheet 16 for the exact location of these two sites. There are no wetlands within the vicinity of the project.

PROXIMITY TO NATURAL OR MAN-MADE WATER FEATURES:
The bridge crosses the Black River. No adverse effects are expected to the river during construction and rehabilitation of the bridge.

TEMPORARY EROSION PREVENTION & SEDIMENT CONTROL

Temporary erosion prevention measures to be utilized include:

Project Demarcation Fencing, denoted -PDF- on the plans, to delineate the limits the contractor can access with construction equipment. This measure limits the area that can be disturbed and exposed to erosion.

Seeding, mulching and biodegradable erosion control matting, or an equivalent product, will be utilized on all slopes steeper than 1V:3H that are not lined with stone fill. These slopes shall be stabilized within 48 hours after reaching final grade or during intermittent phases of construction activity.

Temporary measures to control sediment transport include:

Silt fence will be installed a distance of 5' - 10' from the toe of slopes to prevent sediment transport to down gradient areas. Each line of silt fence will be placed along the contour with ends turned slightly uphill to create a ponding effect should water try to run along the fencing and around the ends. The maximum slope length between separate runs of silt fence is 100'. Silt fence shall be installed prior to any upslope earthwork.

Measures such as silt fence shall be checked regularly for accumulation of sediment. Sediment build-up shall be removed when the level of sediment reaches one-half the height of the control measure. Sediments shall be disposed of in an approved area such that they will not be subject to erosion.

Vehicle tracking pads to the project site, staging areas, as well as to waste and borrow areas shall be established. The minimum size of a vehicle tracking pad is 12' x 50'.
All surface water flowing to or diverted towards a vehicle tracking pad shall be piped under the stone. Pipes shall be appropriately sized for the contributing area, however, no pipes smaller than 6" diameter shall be used.

Sandbags will be used to create a dry environment while pouring the new abutment facing. It is proposed that the sandbags will be placed on the existing toe. Creating a dry area will prevent any transport of concrete or sediment. Sandbags shall stay in place until concrete has cured and the forms are removed.

PERMANENT EROSION CONTROL MEASURES

Permanent erosion control measures will be utilized:

Stone Fill, Type I will be utilized at both abutment wingwalls to dissipate water velocities and reduce erosion potential behind the walls.

Any area disturbed by construction shall be seeded and mulched to promote vegetation growth.

GENERAL EROSION & SEDIMENT CONTROL GUIDELINES

The Erosion Control Plans are meant as a guideline for preventing erosion and controlling sediment transport. The work outlined in this narrative consists of applying measures throughout the life of the project to control erosion and minimize the sedimentation of receiving waters. The measures include stabilization and structural practices, stormwater controls and other pollution prevention controls.

Coordinate the installation, use, and removal of erosion and sediment control measures with construction activities to ensure economical, effective and continuous erosion and sediment control. Employ temporary stabilization practices in incremental stages as construction proceeds. The contractor will use additional erosion control measures as necessitated by the sequence of construction and as directed by the Engineer and On-site Coordinator. See subsection 105.23 of the Vermont ACT Standard Specifications for Construction, dated 2006.

Install all erosion and sediment control measures as shown in the Erosion Control Plan or as directed by the Engineer and On-site coordinator. Do not modify the type, size or location of any control or practice without approval of the Engineer and On-site coordinator. Any changes shall be noted on the plans, in the weekly inspection report, and reported to the appropriate authority in a timely manner. Inspect all control measures weekly and after each rainfall event. Repair measures promptly once damage is discovered.

Preventing initial soil erosion is much more effective than treating eroded sediment. Therefore, stabilize all disturbed areas promptly after construction activity has temporarily or permanently ceased. Temporary vegetation shall be established if the area is to be without construction activity for a period of 14 days. All exposed areas shall be appropriately stabilized prior to a significant rain event. Perimeter control measures shall be installed following clearing, but prior to the start of any grubbing or grading activity, install other temporary controls in incremental stages as construction proceeds.

Maintaining vegetated buffers along stream banks, wetlands or other sensitive areas is a crucial erosion and sediment control measure that should be established wherever possible.

Control only sediment-laden runoff generated by the project site. Collect and route clean offsite runoff around or through the project site using diversion berms, diversion channels, culverts and/or temporary pipes.

Do not allow construction equipment to operate on the down slope side of perimeter control measures.

PROJECT NAME:	**SPRINGFIELD**		
PROJECT NUMBER:	**BHO 1442(30)**		
FILE NAME:	**/96j348/str/s96j348ec.dgn**	PLOT DATE:	**8/1/2005**
PROJECT LEADER:	**R.R. WHITCOMB**	DRAWN BY:	**J. PERRIGO**
DESIGNED BY:	**J. PERRIGO**	CHECKED BY:	**C. CARLSON**
EROSION CONTROL NARRATIVE		SHEET	**14** OF **85**

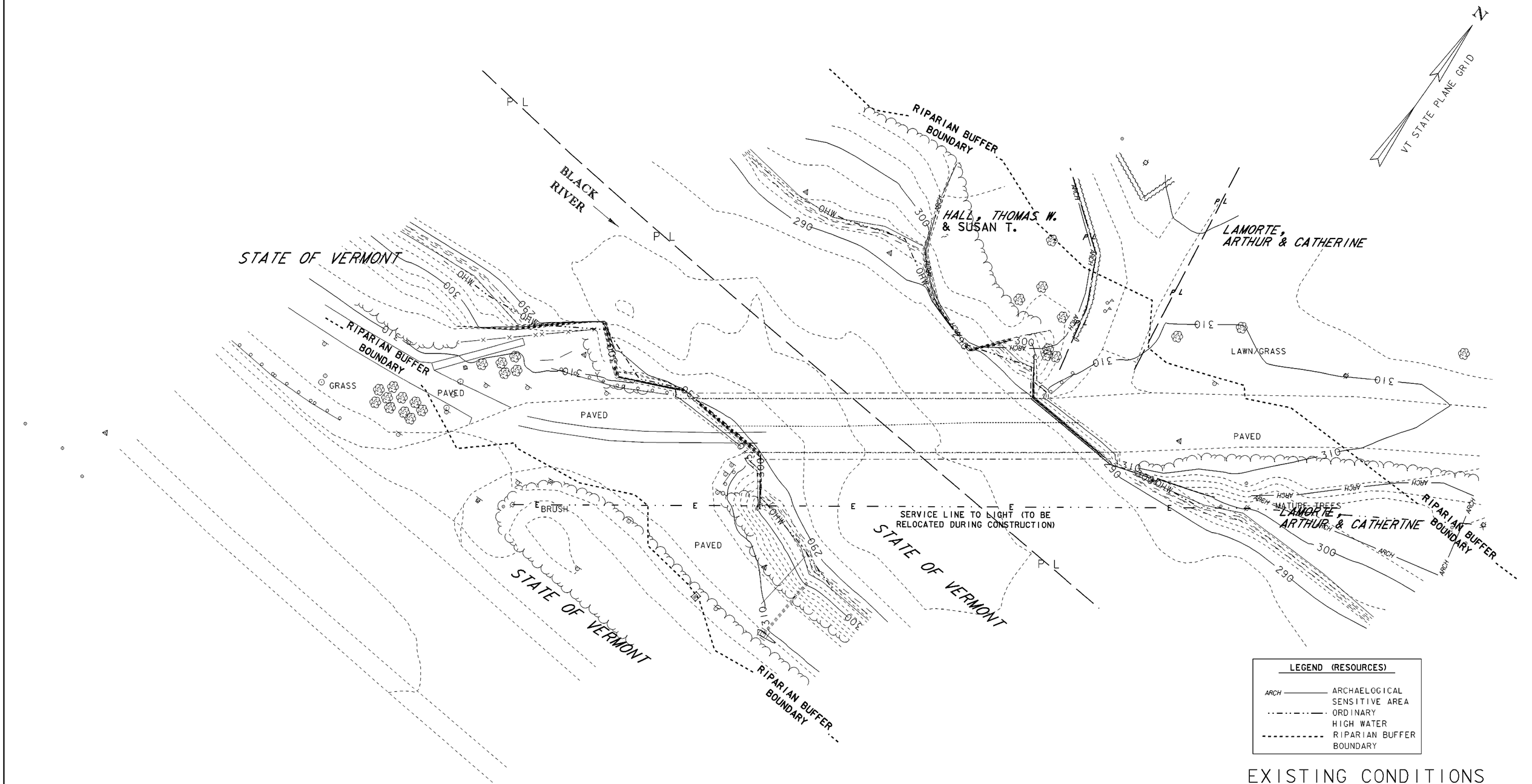

EXISTING CONDITIONS SITE PLAN

20 0 20
SCALE: 1" = 20'-0"

PROJECT NAME:	SPRINGFIELD
PROJECT NUMBER:	BHO 1442(30)

FILE NAME: 96j348/str/s96j348ec.dgn	PLOT DATE: 27-DEC-2007
PROJECT MANAGER: R. R. WHITCOMB	DRAWN BY: J. PERRIGO
DESIGNED BY: J. PERRIGO	CHECKED BY: C. CARLSON
s96j348ecl.i	SHEET 15 OF 85

NOTES:

SILT FENCE INSTALLATION MAY REQUIRE PHASING TO MAXIMIZE EFFECTIVENESS. INSTALL AND/OR MOVE SILT FENCE AS CONSTRUCTION PROGRESSES TO OBTAIN THE GREATEST PREVENTION OF SEDIMENT TRANSPORT. ALL SILT FENCE INSTALLATION SHALL BE PROPERLY KEYED INTO THE GROUND AND SUPPORTED AS DETAILED ON SHEET 19. SILT FENCE SHOULD BE INSTALLED ALONG THE CONTOURS TO PREVENT CONCENTRATION OF RUNOFF. THE ENDS OF EACH RUN OF SILT FENCE SHOULD BE TURNED UPHILL TO PROVIDE A SMALL POOL FOR SILT SHOULD WATER TRY TO RUN AROUND THE END OF THE SILT FENCE.

SURFACE ROUGHENING HELPS REDUCE RUNOFF VELOCITIES AND INCREASES INFILTRATION RATES. ROUGHENING MAY BE ACCOMPLISHED BY A NUMBER OF METHODS SUCH AS TRACKING UP AND DOWN THE SLOPE WITH A BULLDOZER, TRACKING ACROSS THE SLOPE WITH A WHEELED VEHICLE OR ANY METHOD OF SCARIFYING THE SLOPE SUCH THAT THE GROOVES CREATED RUN PERPENDICULAR TO THE DIRECTION OF WATER RUNOFF.

FOR CLARITY, AREAS TO BE SEEDED AND MULCHED HAVE NOT BEEN INDICATED, HOWEVER, ALL DISTURBED AREAS SHALL BE SEEDED AND MULCHED AS APPLICABLE.

A FINAL CONDITIONS SITE PLAN HAS BEEN OMITTED FROM THIS SET OF PLANS BECAUSE OF THE MINIMAL GRADE CHANGES AND THE MINIMAL AREA OF DISTURBANCE. WITH THE EXCEPTION OF SEEDING AND MULCHING NO OTHER EROSION CONTROL MEASURES WILL BE EMPLOYED IN THE FINAL CONDITION. FOR FINAL GRADES SEE CROSS SECTION SHEETS 49-55.

EROSION AND SEDIMENT CONTROL INDEX	
NO.	DESCRIPTION
1	PROJECT DEMARCATION FENCE
2	INSTALL CONTINUOUS LINE OF SILT FENCE
3	INSTALL EROSION MATTING IN AREAS WITH SLOPES STEEPER THAN 1V:3H
4	INSTALL STONE FILL, TYPE I BEHIND WINGWALLS TO PREVENT EROSION
5	INSTALL CONTINUOUS LINE OF FILTER CURTAIN
6	INSTALL FILTER FABRIC DROP INLET PROTECTION

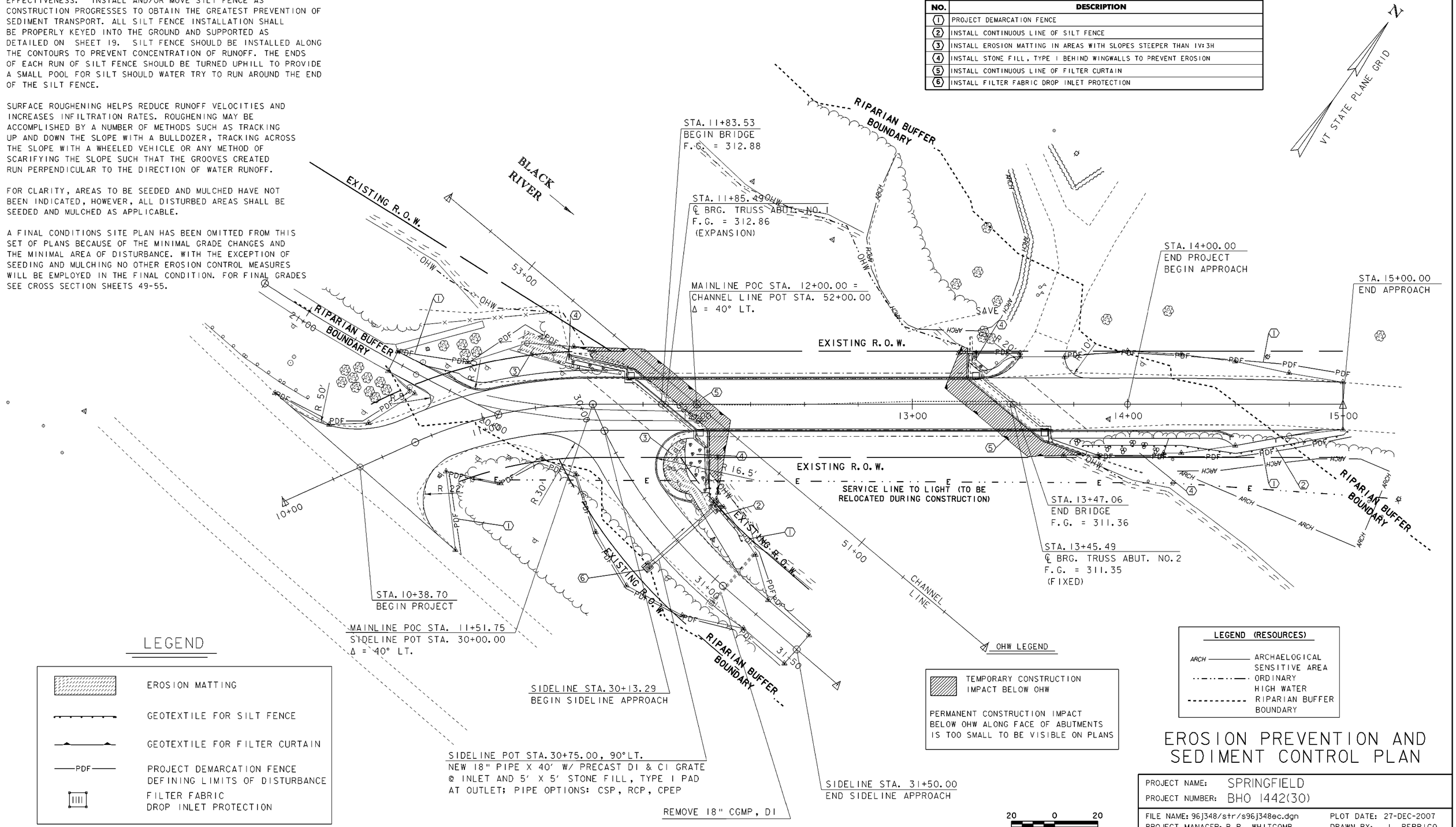

LEGEND

- EROSION MATTING
- GEOTEXTILE FOR SILT FENCE
- GEOTEXTILE FOR FILTER CURTAIN
- PDF — PROJECT DEMARCATION FENCE DEFINING LIMITS OF DISTURBANCE
- FILTER FABRIC DROP INLET PROTECTION

OHW LEGEND

TEMPORARY CONSTRUCTION IMPACT BELOW OHW

PERMANENT CONSTRUCTION IMPACT BELOW OHW ALONG FACE OF ABUTMENTS IS TOO SMALL TO BE VISIBLE ON PLANS

LEGEND (RESOURCES)

- ARCH — ARCHAEOLOGICAL SENSITIVE AREA
- ORDINARY HIGH WATER
- RIPARIAN BUFFER BOUNDARY

SCALE: 1" = 20'-0"

EROSION PREVENTION AND SEDIMENT CONTROL PLAN

PROJECT NAME: SPRINGFIELD
PROJECT NUMBER: BHO 1442(30)

FILE NAME: 96J348/str/s96j348ec.dgn
PROJECT MANAGER: R.R. WHITCOMB
DESIGNED BY: J. PERRIGO
s96j348ec2.i

PLOT DATE: 27-DEC-2007
DRAWN BY: J. PERRIGO
CHECKED BY: C. CARLSON

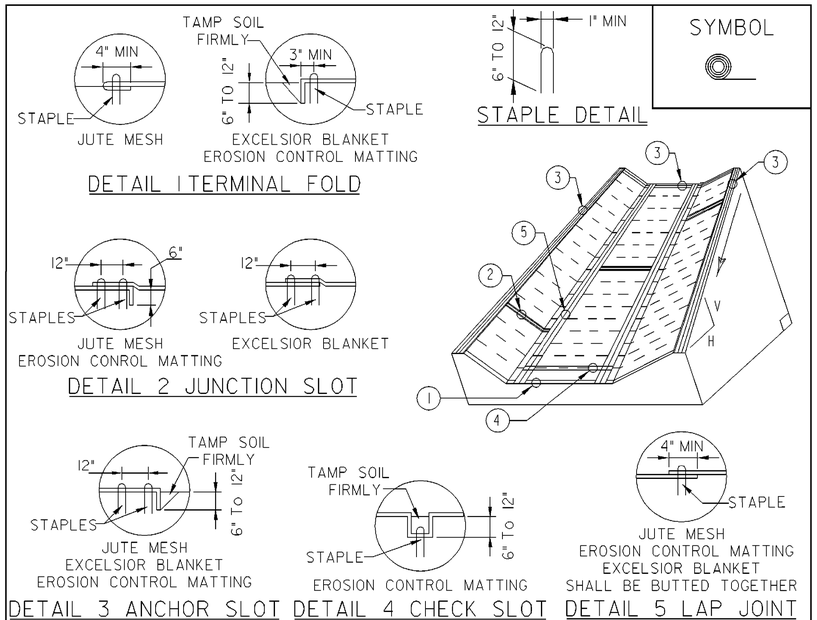

CONSTRUCTION SPECIFICATIONS

1. EROSION MATTING, CHECK SLOTS, SHALL BE SPACED IN DITCH CHANNEL SO THAT ONE OCCURS WITHIN EACH 50' ON SLOPES OF MORE THAN 4% AND LESS THAN 6%. ON SLOPES OF 6% OR MORE, THEY SHALL BE SPACED SO THAT ONE OCCURS WITHIN EACH 25'.

2. APPLY FERTILIZER, LIME SEED PRIOR TO PLACING MATTING.

3. STAPLES ARE TO BE PLACED ALTERNATELY, IN COLUMNS APPROXIMATELY 2' APART AND IN ROWS APPROXIMATELY 3' APART. APPROXIMATELY 175 STAPLES ARE REQUIRED PER 4'X225' ROLL OF MATERIAL AND 125 STAPLES ARE REQUIRED PER 4'X150' ROLL OF MATERIAL.

4. DISTURBED AREAS SHALL BE SMOOTHLY GRADED. EROSION CONTROL MATERIAL SHALL BE PLACED LOOSELY OVER GROUND SURFACE. DO NOT STRETCH.

5. ALL TERMINAL ENDS AND TRANSVERSE LAPS SHALL BE STAPLED AT APPROXIMATELY 12" INTERVALS.

ADAPTED FROM DETAILS PROVIDED BY: ILLINOIS USDA-NRCS
ORIGINALLY DEVELOPED BY USDA-NRCS
VERMONT DEPARTMENT OF ENVIRONMENTAL CONSERVATION

ROLLED EROSION CONTROL PRODUCT (RECP) DITCH

NOTES:
REFER TO "THE VERMONT STANDARDS & SPECIFICATIONS FOR EROSION PREVENTION & SEDIMENT CONTROL -2006- " FROM THE VT AGENCY OF NATURAL RESOURCES FOR ADDITIONAL GUIDANCE.

THIS ITEM SHALL BE PAID FOR UNDER ITEM
653.20 TEMPORARY EROSION MATTING.

REVISIONS	
MARCH 8, 2007	JMF
APRIL 16, 2007	WHF

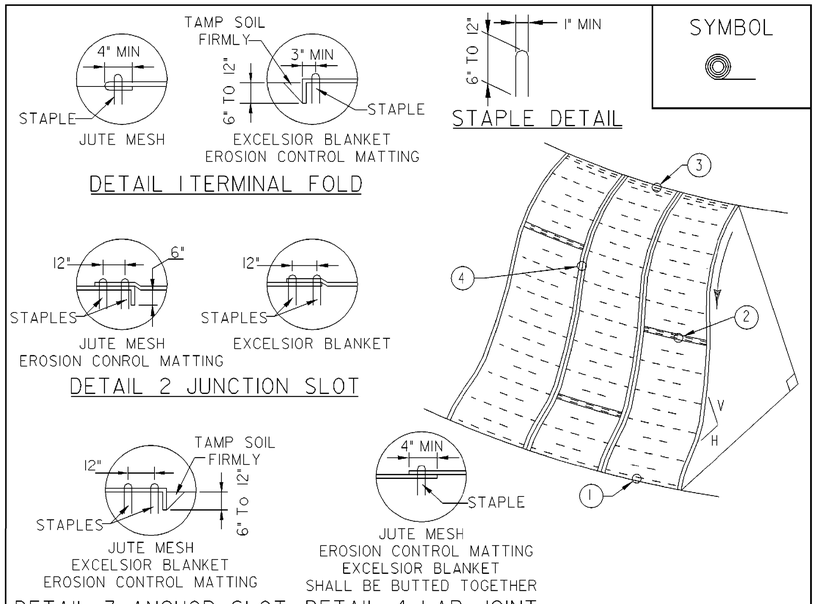

CONSTRUCTION SPECIFICATIONS

1. APPLY TO SLOPES GREATER THAN 3H:1V OR WHERE NECESSARY TO AID IN ESTABLISHING VEGETATION.

2. APPLY FERTILIZER, LIME AND SEED PRIOR TO PLACING MATTING.

3. STAPLES ARE TO BE PLACED ALTERNATELY, IN COLUMNS APPROXIMATELY 2' APART AND IN ROWS APPROXIMATELY 3' APART. APPROXIMATELY 175 STAPLES ARE REQUIRED PER 4'X225' ROLL OF MATERIAL AND 125 STAPLES ARE REQUIRED PER 4'X150' ROLL OF MATERIAL.

4. DISTURBED AREAS SHALL BE SMOOTHLY GRADED. EROSION CONTROL MATERIAL SHALL BE PLACED LOOSELY OVER GROUND SURFACE. DO NOT STRETCH.

5. ALL TERMINAL ENDS AND TRANSVERSE LAPS SHALL BE STAPLED AT APPROXIMATELY 12" INTERVALS.

ADAPTED FROM DETAILS PROVIDED BY: ILLINOIS USDA-NRCS
ORIGINALLY DEVELOPED BY USDA-NRCS
VERMONT DEPARTMENT OF ENVIRONMENTAL CONSERVATION

ROLLED EROSION CONTROL PRODUCT (RECP) SIDE SLOPE

NOTES:
REFER TO "THE VERMONT STANDARDS & SPECIFICATIONS FOR EROSION PREVENTION & SEDIMENT CONTROL -2006- " FROM THE VT AGENCY OF NATURAL RESOURCES FOR ADDITIONAL GUIDANCE.

THIS ITEM SHALL BE PAID FOR UNDER ITEM
653.20 TEMPORARY EROSION MATTING.

NEW	
APRIL 16, 2007	WHF
REVISIONS	

EROSION CONTROL DETAILS SHEET (1)

PROJECT NAME: SPRINGFIELD
PROJECT NUMBER: BHO 1442(30)

FILE NAME: 96J348/str/s96J348ec.dgn
PROJECT LEADER: R. WHITCOMB
DESIGNED BY: C. CARLSON
s96J348edl.i

PLOT DATE: 27-DEC-2007
DRAWN BY: L. BULLOCK
CHECKED BY: C. CARLSON
SHEET 17 OF 85

SYMBOL

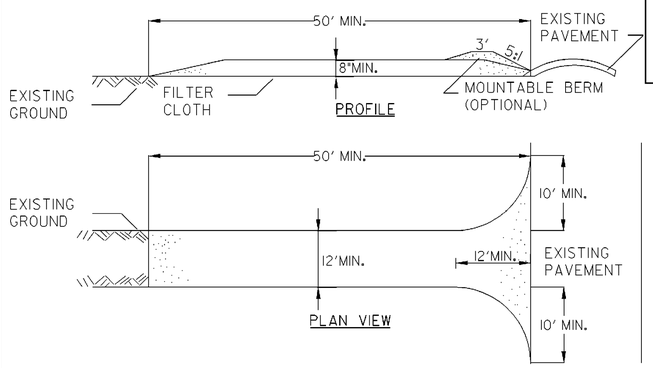

CONSTRUCTION SPECIFICATIONS

1. STONE SIZE - USE 1-4" STONE, OR RECLAIMED OR RECYCLED CONCRETE EQUIVALENT.
2. LENGTH - NOT LESS THAN 50 FEET (EXCEPT ON A SINGLE RESIDENCE LOT WHERE A 30 FOOT MINIMUM LENGTH APPLIES).
3. THICKNESS - NOT LESS THAN EIGHT (8) INCHES.
4. WIDTH - TWELVE (12) FOOT MINIMUM, BUT NOT LESS THAN THE FULL WIDTH AT POINTS WHERE INGRESS OR EGRESS OCCURS. TWENTY-FOUR (24) FOOT IF SINGLE ENTRANCE TO SITE.
5. GEOTEXTILE MUST BE PLACED OVER THE ENTIRE AREA PRIOR TO PLACING STONE.
6. SURFACE WATER - ALL SURFACE WATER FLOWING OR DIVERTED TOWARD CONSTRUCTION ENTRANCES SHALL BE PIPED BENEATH THE ENTRANCE. IF PIPING IS IMPRACTICAL, A MOUNTABLE BERM WITH 5:1 SLOPES WILL BE PERMITTED.
7. MAINTENANCE - THE ENTRANCE SHALL BE MAINTAINED IN A CONDITION WHICH WILL PREVENT TRACKING OR FLOWING OF SEDIMENT ONTO PUBLIC RIGHTS-OF-WAY, ALL SEDIMENT SPILLED, DROPPED, WASHED OR TRACKED ONTO PUBLIC RIGHTS-OF-WAY MUST BE REMOVED IMMEDIATELY.
8. WHEN WASHING IS REQUIRED, IT SHALL BE DONE ON AN AREA STABILIZED WITH STONE AND WHICH DRAINS INTO AN APPROVED SEDIMENT TRAPPING DEVICE.
9. PERIODIC INSPECTION AND NEEDED MAINTENANCE SHALL BE PROVIDED ACCORDING TO PERMIT REQUIREMENTS.

ADAPTED FROM DETAILS PROVIDED BY: NEW YORK STATE DEC
ORIGINALLY DEVELOPED BY USDA-NRCS
VERMONT DEPARTMENT OF ENVIRONMENTAL CONSERVATION

STABILIZED CONSTRUCTION ENTRANCE

NOTES:
REFER TO "THE VERMONT STANDARDS & SPECIFICATIONS FOR EROSION PREVENTION & SEDIMENT CONTROL -2006- " FROM THE VT AGENCY OF NATURAL RESOURCES FOR ADDITIONAL GUIDANCE.

THIS ITEM SHALL BE PAID FOR UNDER ITEM
653.35 VEHICLE TRACKING PAD

REVISIONS	
FEBRUARY 9, 2007	WHF
MARCH 8, 2007	JMF

SYMBOL

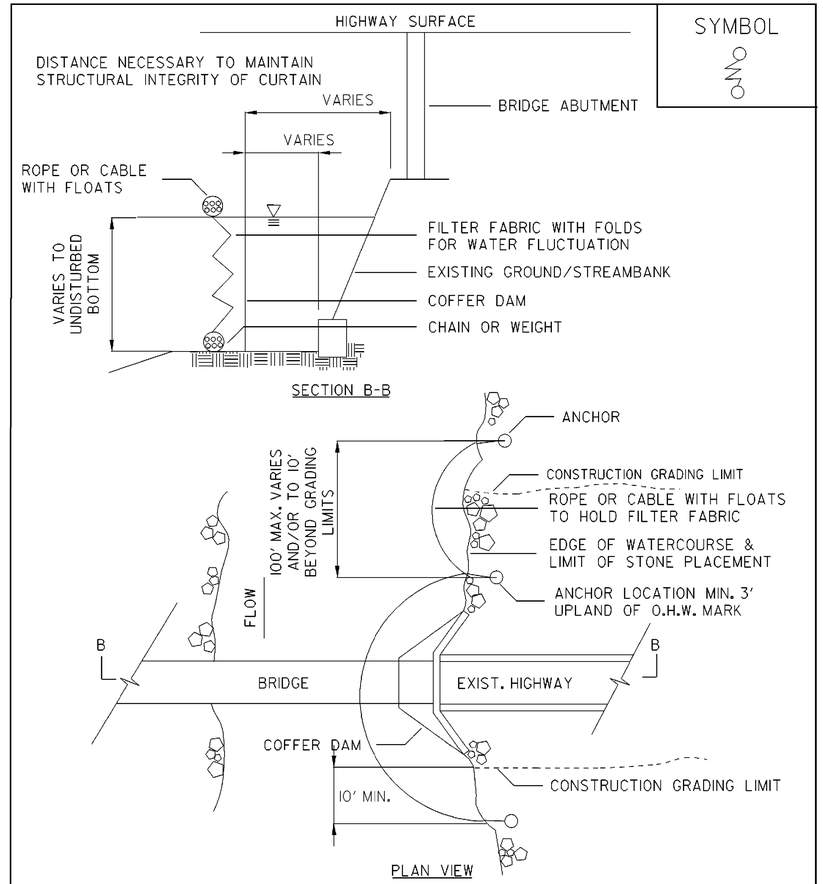

ADAPTED FROM DETAILS PROVIDED BY: NEW YORK STATE DEC
ORIGINALLY DEVELOPED BY USDA-NRCS
VERMONT AGENCY OF TRANSPORTATION

TURBIDITY CURTAIN

NOTES:
THIS ITEM SHALL BE PAID FOR UNDER ITEM
649.61 GEOTEXTILE FOR FILTER CURTAIN

SYMBOL

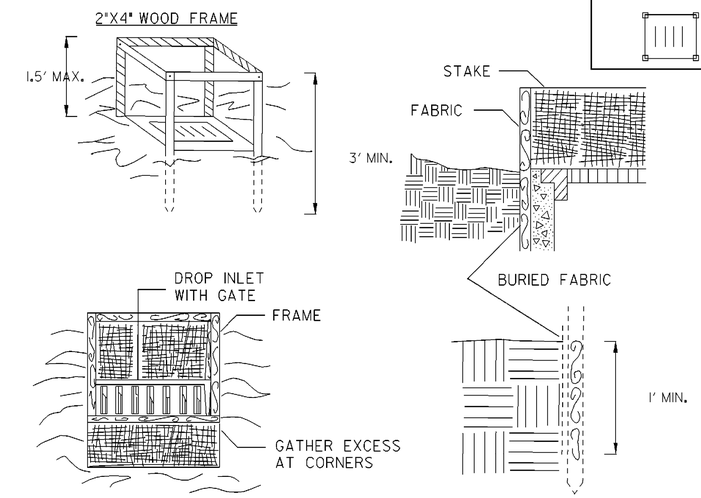

CONSTRUCTION SPECIFICATIONS

1. FILTER FABRIC SHALL HAVE AN EOS OF 40-85. BURLAP MAY BE USED FOR SHORT TERM APPLICATIONS.
2. CUT FABRIC FROM A CONTINUOUS ROLL TO ELIMINATE JOINTS. IF JOINTS ARE NEEDED THEY WILL BE OVERLAPPED TO THE NEXT STAKE.
3. STAKE MATERIALS WILL BE STANDARD 2" x 4" WOOD OR EQUIVALENT METAL WITH A MINIMUM LENGTH OF 3 FEET.
4. SPACE STAKES EVENLY AROUND INLET 3 FEET APART AND DRIVE A MINIMUM 18 INCHES DEEP. SPANS GREATER THAN 3 FEET MAY BE BRIDGED WITH THE USE OF WIRE MESH BEHIND THE FILTER FABRIC FOR SUPPORT.
5. FABRIC SHALL BE EMBEDDED 1FOOT MINIMUM BELOW GROUND AND BACKFILLED. IT SHALL BE SECURELY FASTENED TO THE STAKES AND FRAME.
6. A 2" x 4" WOOD FRAME SHALL BE COMPLETED AROUND THE CREST OF THE FABRIC FOR OVER FLOW STABILITY.

MAXIMUM DRAINAGE AREA 1 ACRE

ADAPTED FROM DETAILS PROVIDED BY: NEW YORK STATE DEC
ORIGINALLY DEVELOPED BY USDA-NRCS
VERMONT DEPARTMENT OF ENVIRONMENTAL CONSERVATION

FILTER FABRIC DROP INLET PROTECTION

NOTES:
REFER TO "THE VERMONT STANDARDS & SPECIFICATIONS FOR EROSION PREVENTION & SEDIMENT CONTROL -2006- " FROM THE VT AGENCY OF NATURAL RESOURCES FOR ADDITIONAL GUIDANCE.

THIS ITEM SHALL BE PAID FOR UNDER ITEM
653.40 INLET PROTECTION DEVICE, TYPE I

REVISIONS	
MARCH 8, 2007	JMF

EROSION CONTROL DETAILS SHEET (2)

PROJECT NAME: SPRINGFIELD
PROJECT NUMBER: BHO 1442(30)

FILE NAME: 96J348/str/s96J348ec.dgn
PROJECT LEADER: R. WHITCOMB
DESIGNED BY: C. CARLSON
s96J348ed2.1

PLOT DATE: 27-DEC-2007
DRAWN BY: str3
CHECKED BY: C. CARLSON
SHEET 18 OF 85

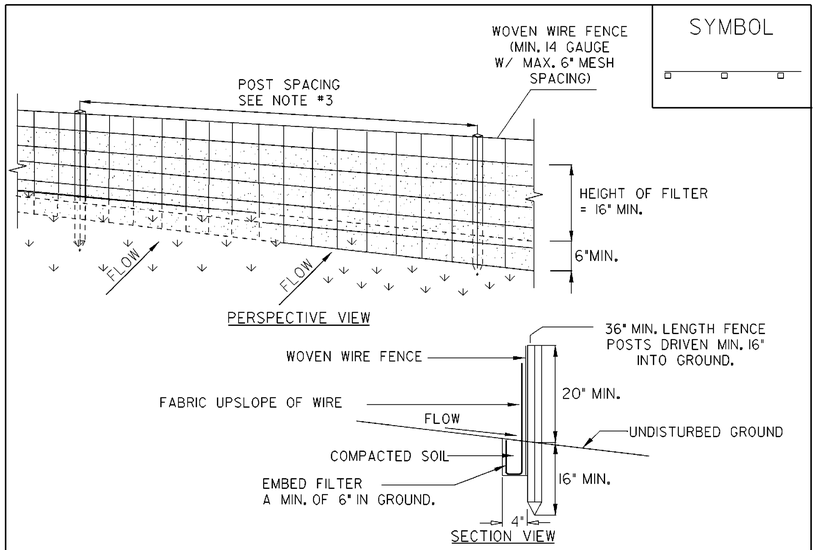

CONSTRUCTION SPECIFICATIONS

1. WOVEN WIRE FENCE REINFORCEMENT IS ONLY REQUIRED WITHIN 100 FT UPSLOPE OF RECEIVING WATERS.

2. WHERE REQUIRED FENCE SHALL BE WOVEN WIRE, MIN. 14 GAUGE WITH A 6" MAXIMUM MESH OPENING. FILTER CLOTH SHALL BE EITHER FILTER X, MIRAFI100X, STABILINKA T140N OR APPROVED EQUIVALENT.

3. POST SPACING FOR WIRE-BACKED FENCE SHALL BE 10' MAXIMUM. FOR FILTER-CLOTH FENCE, WHEN ELONGATION IS >50%, POST SPACING SHALL NOT EXCEED 4'. FOR FILTER-CLOTH FENCE, WHEN ELONGATION IS <50%, POST SPACING SHALL NOT EXCEED 6'.

4. WOVEN WIRE FENCE IS TO BE FASTENED SECURELY TO FENCE POSTS WITH WIRE TIES. FILTER CLOTH IS TO BE FASTENED SECURELY TO WOVEN WIRE FENCE WITH TIES SPACED EVERY 24" AT TOP AND MID SECTION.

5. WHEN TWO SECTIONS OF FILTER CLOTH ADJOIN EACH OTHER THEY SHALL BE OVER-LAPPED BY SIX INCHES AND FOLDED.

6. PREFABRICATED UNITS SHALL BE GEOFAB, ENVIROFENCE, OR APPROVED EQUIVALENT.

7. MAINTENANCE SHALL BE PERFORMED AS NEEDED AND MATERIAL REMOVED WHEN SEDIMENT REACHES HALF OF FABRIC HEIGHT.

ADAPTED FROM DETAILS PROVIDED BY: NEW YORK STATE DEC
ORIGINALLY DEVELOPED BY USDA-NRCS
VERMONT DEPARTMENT OF ENVIRONMENTAL CONSERVATION

SILT FENCE

NOTES:
REFER TO "THE VERMONT STANDARDS & SPECIFICATIONS FOR EROSION PREVENTION & SEDIMENT CONTROL -2006- " FROM THE VT AGENCY OF NATURAL RESOURCES FOR ADDITIONAL GUIDANCE.

THIS ITEM SHALL BE PAID FOR UNDER ITEM
649.51 GEOTEXTILE FOR SILT FENCE (FILTER FABRIC ONLY FENCE)

SEEDING FORMULA RURAL AREAS

% WT.	LBS./A.	NAME	PUR %	GERM %
37.5	22.5	CREEPING RED FESCUE	98	85
37.5	22.5	TALL FESCUE	95	90
5.0	3.0	RED TOP	95	90
15.0	9.0	BIRDSFOOT TREFOIL	98	85
5.0	3.0	ANNUAL RYEGRASS	95	85
100.0	60.0			

SEEDING FORMULA URBAN AREAS

% WT.	LBS./A.	NAME	PUR %	GERM %
42.5	34.0	CREEPING RED FESCUE	98	85
10.0	8.0	PERENNIAL RYE GRASS	95	90
42.5	34.0	KENTUCKY BLUE GRASS	85	85
5.0	4.0	ANNUAL RYE GRASS	95	85
100.00	80.0			

GENERAL NOTES

SEED MIXTURE: SHALL NOT HAVE A WEED CONTENT EXCEEDING 0.40% BY WEIGHT AND SHALL BE FREE OF ALL NOXIOUS SEED.

SEED: TO BE APPLIED PER SEEDING FORMULAS OR AS DIRECTED BY THE ENGINEER.

FERTILIZER: FORMULA 10-20-10, TO BE USED WITH SEED, APPLIED AT THE RATE OF 500 LBS./ACRE. (HYDRO SEEDERS MAY USE 19-19-19 FORMULA).

AGRICULTURAL LIMESTONE: TO BE APPLIED AT THE RATE OF 2 TONS/ACRE, OR AS DIRECTED BY THE ENGINEER.

HAY MULCH: TO BE PLACED ON EARTH SLOPES AT THE RATE OF 2 TONS/ACRE, OR AS DIRECTED BY THE ENGINEER.

TOPSOIL: TO BE USED WITH SEED AS INDICATED ON THE PLANS, OR AS DIRECTED BY THE ENGINEER.

SLOPE ROUNDING: ALL CUT SLOPES TO BE ROUNDED IN ACCORDANCE WITH STANDARD SHEET B - 5.

EROSION CONTROL DETAILS SHEET (3)

PROJECT NAME: SPRINGFIELD
PROJECT NUMBER: BHO 1442(30)

FILE NAME: 96J348/str/s96J348ec.dgn
PROJECT LEADER: R. WHITCOMB
DESIGNED BY: C. CARLSON
s96J348ed3.1
PLOT DATE: 27-DEC-2007
DRAWN BY: str3
CHECKED BY: C. CARLSON
SHEET 19 OF 85

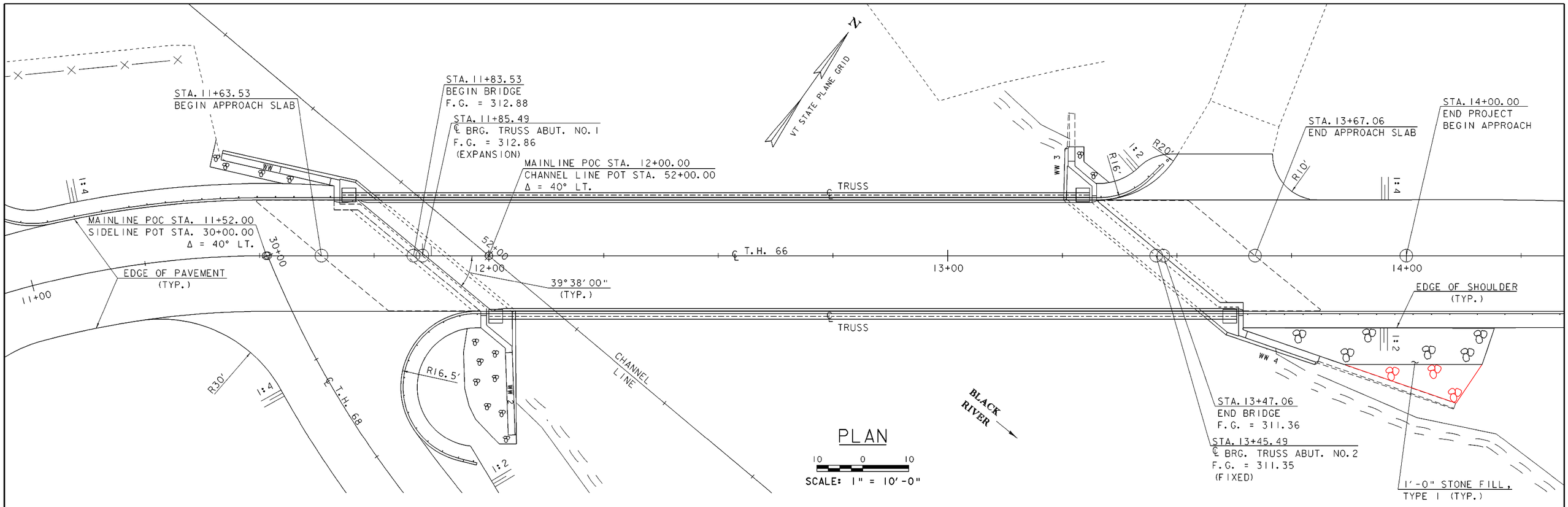

PLAN

10 0 10

SCALE: 1" = 10'-0"

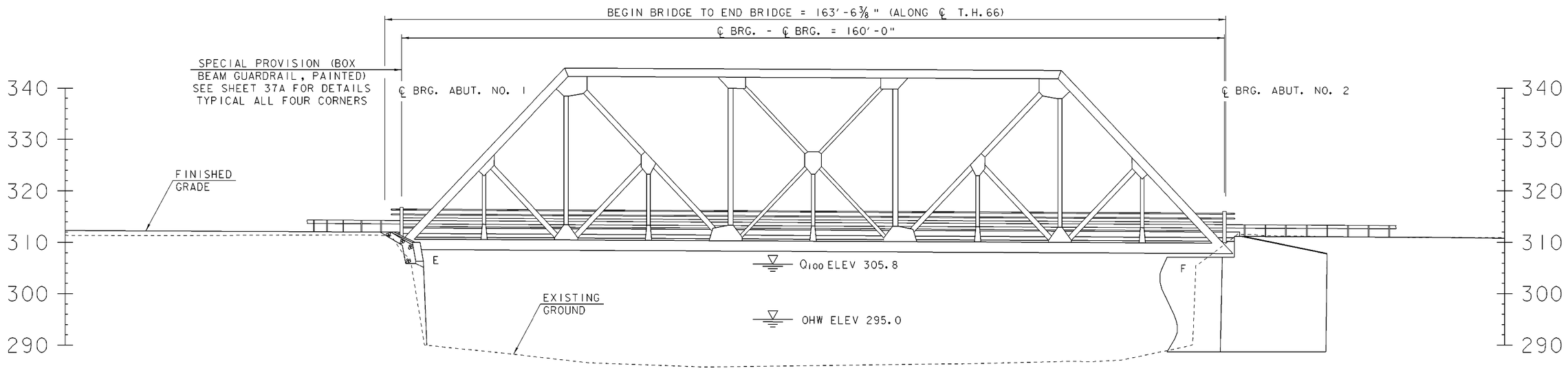

ELEVATION

10 0 10

SCALE: 1" = 10'-0"

PLAN AND ELEVATION

PROJECT NAME:	SPRINGFIELD
PROJECT NUMBER:	BHO 1442(30)

FILE NAME: 96j348/str/s96j348pe.dgn	PLOT DATE: 27-DEC-2007
PROJECT MANAGER: R.R. WHITCOMB	DRAWN BY: G. ROY
DESIGNED BY: G. ROY	CHECKED BY: C. CARLSON
s96j348pe.i	SHEET 20 OF 85

GENERAL

1. ALL MATERIALS AND CONSTRUCTION SHALL CONFORM TO THE STATE OF VERMONT AGENCY OF TRANSPORTATION STANDARD SPECIFICATIONS FOR CONSTRUCTION DATED 2006, AND ITS LATEST REVISIONS, AND THE AASHTO STANDARD SPECIFICATIONS FOR HIGHWAY BRIDGES, DATED 2002, AND ITS LATEST REVISIONS.

2. BRIDGE 81 IS CURRENTLY CLOSED TO VEHICULAR TRAFFIC AND IS OPEN FOR BICYCLES AND PEDESTRIANS. THE BRIDGE WILL BE CLOSED TO ALL VEHICLES, PEDESTRIANS AND BICYCLES DURING CONSTRUCTION OF THE PROJECT. BICYCLES AND PEDESTRIANS WILL BE DETOURED ONTO TOWN HIGHWAY 68 (PERLEY GORDON RD.) DURING CONSTRUCTION.

3. THE TOWN WILL BE RESPONSIBLE FOR OFF PROJECT DETOUR SIGNS. THE CONTRACTOR SHALL ERECT AND MAINTAIN ALL ON AND OFF-PROJECT CONSTRUCTION SIGNS AND BARRICADES. PAYMENT FOR THIS WORK SHALL BE CONSIDERED INCIDENTAL TO ITEM 641.10, "TRAFFIC CONTROL."

4. THE EXISTING BARRICADES, CONCRETE BARRIER AND SIGNS (WITHIN THE PROJECT LIMITS) THAT ARE CURRENTLY BEING USED FOR THE CLOSURE OF THE BRIDGE ARE THE PROPERTY OF THE TOWN OF SPRINGFIELD. THE CONTRACTOR SHALL CALL HARRY HENDERSON, PUBLIC WORKS DIRECTOR AT (802) 886-2208 TOWN TWO WEEKS PRIOR TO THE REMOVAL OF THESE ITEMS. PROJECT SIGNS AND BARRICADES SHALL BE IN PLACE PRIOR TO REMOVING TOWN OWNED SIGNS AND BARRICADES.

5. FULL ACCESS TO ALL SIDE ROADS, DRIVES AND THE BIKE/PEDESTRIAN PATH WITHIN THE PROJECT LIMITS SHALL BE MAINTAINED AT ALL TIMES. IF THE CONTRACTOR MUST RESTRICT ACCESS, THEY MUST NOTIFY THE PROPERTY OWNERS AND TOWN IN ADVANCE. THIS WORK SHALL BE CONSIDERED INCIDENTAL TO ITEM 641.10, "TRAFFIC CONTROL."

6. THE CONTRACTOR SHALL TAKE ALL PRECAUTIONS NECESSARY TO PREVENT SILTATION OR POLLUTION, IN PARTICULAR THE DISCHARGE OF RAW CONCRETE INTO THE BLACK RIVER, AS DIRECTED BY THE RESIDENT ENGINEER AND STANDARD SPECIFICATIONS SECTION 105.

7. FOR INFORMATION REGARDING UTILITIES, SEE THE SPECIAL PROVISIONS.

8. (A) EXISTING DIMENSIONS: DIMENSIONS AND ANGLES OF THE EXISTING STRUCTURE SHOWN ON THESE PLANS ARE FOR GENERAL REFERENCE ONLY. THEY HAVE BEEN TAKEN FROM LIMITED FIELD INVESTIGATION AND ARE NOT GUARANTEED. THE CONTRACTOR SHALL TAKE ALL FIELD MEASUREMENTS NECESSARY TO ASSURE PROPER FIT OF THE FINISHED WORK AND SHALL ASSUME FULL RESPONSIBILITY FOR THEIR ACCURACY. WHEN SHOP DRAWINGS BASED ON FIELD MEASUREMENTS ARE SUBMITTED FOR APPROVAL, THE FIELD MEASUREMENTS SHALL ALSO BE SUBMITTED FOR REFERENCE BY THE REVIEWER. NO EXTRA PAYMENT WILL BE MADE FOR OBTAINING THE NECESSARY MEASUREMENTS.

   (B) THESE PLANS WERE PREPARED BASED ON INFORMATION OBTAINED FROM REFERENCE PLANS SHEETS 63-85. THE CONTRACTOR MAY BE REQUIRED TO MAKE MINOR CHANGES TO THE DIMENSIONS SHOWN ON THE PLANS TO FIT THE ACTUAL FIELD CONDITIONS.

9. ALL DIMENSIONS SHOWN IN THE PLANS ARE HORIZONTAL OR VERTICAL AND ARE GIVEN AT 68 DEGREES FAHRENHEIT, UNLESS NOTED OTHERWISE

EARTHWORK AND RELATED ITEMS

10. ITEM 529.20, "PARTIAL REMOVAL OF STRUCTURES" SHALL INCLUDE REMOVAL AND DISPOSAL OF THE FOLLOWING:
    - CONCRETE BRIDGE DECK
    - EXISTING LATERAL BRACING
    - EXISTING BOTTOM CHORD MEMBERS
    - EXISTING FLOOR BEAMS AND STRINGERS
    - EXISTING ANGLES, PLATES OR STRUCTURAL SECTIONS REMOVED TO MAKE REPAIRS TO THE BRIDGE
    - VERTICAL AND DIAGONAL MEMBERS OF THE TRUSS DESIGNATED TO BE REPLACED
    - EXISTING BRIDGE RAILING
    - EXISTING BEARINGS (STRINGERS, FLOOR BEAMS AND TRUSSES)
    - EXISTING RAILROAD TRACKS ON AND OFF THE BRIDGE WITHIN THE PROJECT LIMITS

STRUCTURAL STEEL

11. ALL STRUCTURAL STEEL PAID FOR UNDER THE ITEM 506.50 "STRUCTURAL STEEL (ROLLED BEAM)", 506.55 "STRUCTURAL STEEL (PLATE GIRDER) AND 506.60, "STRUCTURAL STEEL" SHALL CONFORM TO AASHTO M 270M/M 270, GRADE 50 (PAINTED).

12. ITEM 506.50 "STRUCTURAL STEEL (ROLLED BEAM) " SHALL INCLUDE THE FOLLOWING:
    - REPLACEMENT OF FLOOR BEAMS WITH W24 X 117 ROLLED BEAMS AS DETAILED ON SHEETS 25 AND 25A
    - REPLACEMENT OF STRINGERS WITH W18 X 50 ROLLED BEAMS AS DETAILED ON SHEET 24
    - ANGLES REQUIRED FOR REPLACEMENT OF BOTTOM CHORDS
    - CHANNELS AND ANGLES REQUIRED FOR REPLACEMENT OF TRUSS MEMBERS
    - REPLACEMENT OF LATERAL BRACING

13. ITEM 506.55 "STRUCTURAL STEEL (PLATE GIRDER) SHALL INCLUDE THE FOLLOWING:
    - REPLACEMENT OF DIAGONAL MEMBERS AS DETAILED ON SHEET 23
    - AN ADDITIONAL 2000 POUNDS OF STRUCTURAL STEEL (PLATE GIRDER) IS INCLUDED IN THIS PAY ITEM FOR ANY ADDITIONAL DIAGONALS OR VERTICALS THAT REQUIRE REPLACEMENT.

14. A) ITEM 506.60, "STRUCTURAL STEEL", SHALL INCLUDE ALL NEW STEEL NOT OTHERWISE DESIGNATED, INCLUDING BUT NOT LIMITED TO:
    - NEW GUSSET PLATES
    - NEW LATTICE BARS
    - NEW DOWNSPOUT DETAILED ON SHEET 35
    - NEW PLATES THAT MAKE UP BOTTOM CHORDS OR TRUSS MEMBERS
    - NEW CHANNELS, ANGLES, PIPES AND ATTACHMENTS THAT MAKE UP THE BRIDGE RAILING ON THE TRUSS (SEE SHEETS 37B - 37D)

    B) 2000 POUNDS OF ADDITIONAL PAINTED STRUCTURAL STEEL HAVE BEEN INCLUDED FOR ANY UNIDENTIFIED TRUSS REPAIRS. AFTER INITIAL REMOVAL OF TRUSS MEMBERS IDENTIFIED IN THE PLANS FOR REPLACEMENT AND CLEANING OF THE AREAS OF THE REMAINING MEMBERS NOW EXPOSED, CONTACT THE VTRANS STRUCTURES PROJECT MANAGER AND/OR PROJECT ENGINEER. PERSONNEL FROM THE STRUCTURES DESIGN SECTION WILL INSPECT THE TRUSS WITH THE RESIDENT ENGINEER TO DETERMINE IF ADDITIONAL TRUSS REPAIRS OR TRUSS MEMBER REPLACEMENT ARE REQUIRED. PAYMENT OF ANY OF ADDITIONAL 2000 POUNDS QUANTITY WILL ONLY BE MADE FOR REPAIRS DIRECTED BY THE ENGINEER.

15. ALL NEW STRUCTURAL STEEL ELEMENTS SUBJECT TO TENSION SHALL BE CHARPY V-NOTCH TESTED. THESE MEMBERS ARE DESIGNATED BY (CVN) IN THE APPLICABLE DETAILS.

16. WHEREVER POSSIBLE, EXISTING RIVETS THAT ARE REMOVED FOR REPAIRS SHALL BE REPLACED WITH 7/8" DIAMETER DOME-HEADED HIGH STRENGTH BOLTS MEETING AASHTO M-164 TYPE 1. IN LOCATIONS DOME-HEADED BOLTS CAN NOT BE INSTALLED, HIGH STRENGTH BOLTS, NUTS AND WASHERS SHALL BE USED.

17. CONNECTIONS NOT DETAILED SHALL BE DETAILED BY THE FABRICATOR AND SUBMITTED TO THE STRUCTURES ENGINEER FOR APPROVAL.

18. ALL BOLTS SHALL BE COATED IN ACCORDANCE WITH AASHTO M-298 CLASS 50, TYPE I. BOLTS SHALL NOT BE PAID FOR SEPARATELY BUT SHALL BE CONSIDERED INCIDENTAL TO OTHER STRUCTURAL STEEL ITEMS.

19. THE EXISTING STRUCTURAL STEEL ON THIS PROJECT WAS PAINTED WITH A MATERIAL WHICH MAY CONTAIN LEAD. THE REMOVED STRUCTURAL STEEL IS TO BECOME THE PROPERTY OF THE CONTRACTOR. THE CONTRACTOR SHALL INDEMNIFY AND HOLD THE STATE, ITS OFFICERS AND EMPLOYEES HARMLESS CONCERNING THE CONTRACTOR'S USE OR DISPOSITION OF THE STRUCTURAL STEEL.

20. ANY NECESSARY SHORING OF THE TRUSS SHALL BE PERFORMED IN ACCORDANCE WITH SECTION 502 OF THE STANDARD SPECIFICATIONS AND SHALL BE PAID FOR UNDER ITEM 502.10, "SHORING SUPERSTRUCTURE". THE CONTRACTOR SHALL TAKE CARE SUCH THAT THE TRUSS REMAINS STABLE DURING DISMANTLING OF THE EXISTING FLOOR SYSTEM AND DURING REPAIR WORK TO TRUSS MEMBERS, SUBSTRUCTURES, AND BEARINGS. THE CONTRACTOR SHALL SUBMIT PLANS FOR DISMANTLING AND SHORING, INCLUDING ASSOCIATED DESIGN CALCULATIONS TO THE STRUCTURES ENGINEER. (SEE SUBSECTION 502.02 OF THE SPECIFICATIONS)

PAINTING

21. THE FAYING SURFACES OF THE TRUSS WHERE THE NEW FLOOR BEAM BRACKETS CONNECT TO THE EXISTING TRUSS MEMBERS SHALL BE BLAST CLEANED AND PRIMED IN ACCORDANCE WITH VAOT SPECIFICATION 513, PRIOR TO THE INSTALLATION OF THE NEW STEEL ELEMENTS. THE TRUSS FAYING SURFACE AND ALL OTHER FAYING SURFACES SHALL MEET THE CLASS "B" COEFFICIENT IN THE "AASHTO SPECIFICATIONS FOR HIGHWAY BRIDGES." THIS IS REQUIRED FOR THOSE LOCATIONS WHERE NEW STEEL IS TO BE ATTACHED TO THE EXISTING TRUSS.

22. THE COLOR OF THE FINAL COAT OF PAINT SHALL BE ~~GREEN~~ BLACK (COLOR CHIP ~~14062~~ 27038) IN ACCORDANCE WITH FEDERAL STANDARD NO. 595.

23. AFTER THE FINAL COAT OF PAINT HAS BEEN APPLIED AND HAS THOROUGHLY CURED, THE FOLLOWING SHALL BE GREASED PER THE 513 VAOT SPECIFICATION:

    - ENTIRE FLOOR SYSTEM
    - ALL TRUSS COMPONENTS BELOW THE TOP OF CURB
    - BEARINGS

    PAYMENT FOR THE GREASE SHALL BE INCIDENTAL TO ITEM 513.30, "STRUCTURAL STEEL PAINTING, FIELD APPLIED." THE COLOR OF THE GREASE SHALL BE ~~GREEN~~ BLACK.

24. ALL NEW STEEL ELEMENTS UNDER THE ITEM 506.50, "STRUCTURAL STEEL (ROLLED BEAM), 506.55 STRUCTURAL STEEL (PLATE GIRDER), 506.60, "STRUCTURAL STEEL" SHALL BE GIVEN AN APPROVED SHOP APPLIED PAINTING SYSTEM PER SPECIFICATION 513.

- THE FAYING SURFACES WERE NOT PRIMED WHEN DISMANTLED. A PENETRATING SEALER (RUST BOND) WAS USED AFTER THE GUSSETS WERE REASSEMBLED.

25. THE PAINT SYSTEM USED IN THE FIELD AND THE SHOP APPLIED PAINT SYSTEM SHALL BE COMPATIBLE AND PROVIDED FROM THE SAME MANUFACTURER.

CONCRETE

26. (A) ABUTMENTS FROM ABOVE CUT LINE TO CONSTRUCTION JOINT AND APPROACH SLABS SHALL BE HIGH PERFORMANCE CLASS B AND SHALL BE PAID FOR UNDER ITEM 501.34, "CONCRETE, HIGH PERFORMANCE CLASS B". DECK (INCLUDING BACK WALLS AND APPROACH SLAB BRACKETS) AND CURB CONCRETE SHALL BE HIGH PERFORMANCE CLASS A AND SHALL BE PAID FOR UNDER ITEM 501.33, "CONCRETE, HIGH PERFORMANCE CLASS A".

    (B) ABUTMENT AND WINGWALL FACINGS SHALL BE SELF CONSOLIDATING CONCRETE AND SHALL BE PAID FOR UNDER ITEM 900.608, "SPECIAL PROVISION (SELF-CONSOLIDATING CONCRETE)"

    (C) THE CONTRACTOR SHALL CONTACT THE CONCRETE PRODUCER EARLY SO THAT THE PRODUCER WILL HAVE TIME TO DO TRIAL MIXES AND TESTING FOR THE SELF-CONSOLIDATING CONCRETE.

27. CONCRETE PORTIONS OF ABUTMENTS AND WINGWALLS ABOVE ADJACENT BRIDGE SEAT ELEVATIONS SHALL NOT BE PLACED UNTIL FINISH GRADES HAVE BEEN DETERMINED BY THE RESIDENT ENGINEER.

28. THE DECK IS TO BE POURED IN ONE CONTINUOUS POUR WITH A MAXIMUM DURATION OF EIGHT HOURS. IF CIRCUMSTANCES BEYOND THE CONTRACTOR'S CONTROL PREVENT THIS FROM BEING ACCOMPLISHED, A TRANSVERSE CONSTRUCTION JOINT SHALL BE USED BETWEEN ADJACENT POURS. A MINIMUM 96 HOUR DELAY BETWEEN ADJACENT POURS SHALL BE OBSERVED.

29. ALL EXPOSED EDGES OF CONCRETE SHALL BE CHAMFERED 1 INCH X 1 INCH.

30. WATER REPELLENT, SILANE (ITEM 514.10) SHALL BE APPLIED TO ALL EXPOSED CONCRETE SURFACES, EXCEPT THE UNDERSIDE OF THE DECK BETWEEN DRIP NOTCHES. SEE SUPPLEMENTAL SPECIFICATION 514.

31. JOINTS AND SCORE MARKS IN CONCRETE SHALL BE CONSTRUCTED AS SHOWN IN THE PLANS OR AS DIRECTED BY THE RESIDENT ENGINEER.

32. THE KEY IN CONCRETE CONSTRUCTION JOINTS SHALL BE MONOLITHIC AND CONTINUOUS FOR THE FULL LENGTH OF THE JOINT. UPWARD KEYS SHALL BE PLACED INTEGRALLY WITH THE CONCRETE BELOW THE JOINT.

33. ALL SUPERSTRUCTURE REINFORCING STEEL SHALL BE EPOXY COATED AND PAID FOR UNDER ITEM 507.17, "EPOXY COATED REINFORCING STEEL". CUTTING AND REPAIRING DAMAGED AREAS OF COATED REINFORCING STEEL SHALL BE PERFORMED IN ACCORDANCE WITH SUBSECTION 507.04 OF THE STANDARD SPECIFICATIONS.

34. MINIMUM COVER FOR REINFORCING STEEL SHALL BE AS INDICATED IN THE PLANS.

35. REINFORCING STEEL PLACEMENT TOLERANCES SHALL BE:
    SPACING: +/- 1 INCH
    CLEARANCE: +/- 1/4 INCH

36. FOLLOWING THE DRILLING AND GROUTING OF DOWELS, THE EXISTING CONCRETE SURFACES SHALL BE PRESSURE WASHED PRIOR TO PLACEMENT OF FORMS. THIS WORK WILL BE INCIDENTAL TO ITEM 529.25, "REMOVAL OF CONCRETE OR MASONRY".

MISCELLANEOUS

37. (A) IN ADDITION TO CLEARING AND GRUBBING AREAS DESCRIBED IN THE STANDARD SPECIFICATIONS, THE CONTRACTOR SHALL REMOVE ALL TREES AND VEGETATION LOCATED FROM STA 11+25 LT TO STA 11+40 LT ON AND AROUND THE EXISTING WINGWALL AND OLD STONE ABUTMENT. THIS WORK WILL BE PAID FOR UNDER ITEM 201.10 "CLEARING AND GRUBBING, INCLUDING INDIVIDUAL TREES AND STUMPS."

    (B) THE CONTRACTOR SHALL PLACE 6" OF TOPSOIL OVER THIS REMOVAL AREA. THE AREA SHALL ALSO BE SEEDED AND MULCHED.

38. THE CONTRACTOR SHALL USE CARE WHILE WORKING IN THE AREA OF THE PARK WHERE THE BENCHES, STONE SIDEWALK AND SHRUBS ARE LOCATED. ANY DAMAGE THAT IS INCURRED SHALL BE REPAIRED BY THE CONTRACTOR AT NO ADDITIONAL COST TO THE AGENCY.

PROJECT NAME:	SPRINGFIELD
PROJECT NUMBER:	BHO 1442 (30)
FILE NAME: 96J348/str/s96J348pn.dgn	PLOT DATE: 27-DEC-2007
PROJECT MANAGER: R. R. WHITCOMB	DRAWN BY: G. ROY
DESIGNED BY: C. CARLSON	CHECKED BY: C. CARLSON
s96J348pn.i	SHEET 21 OF 85

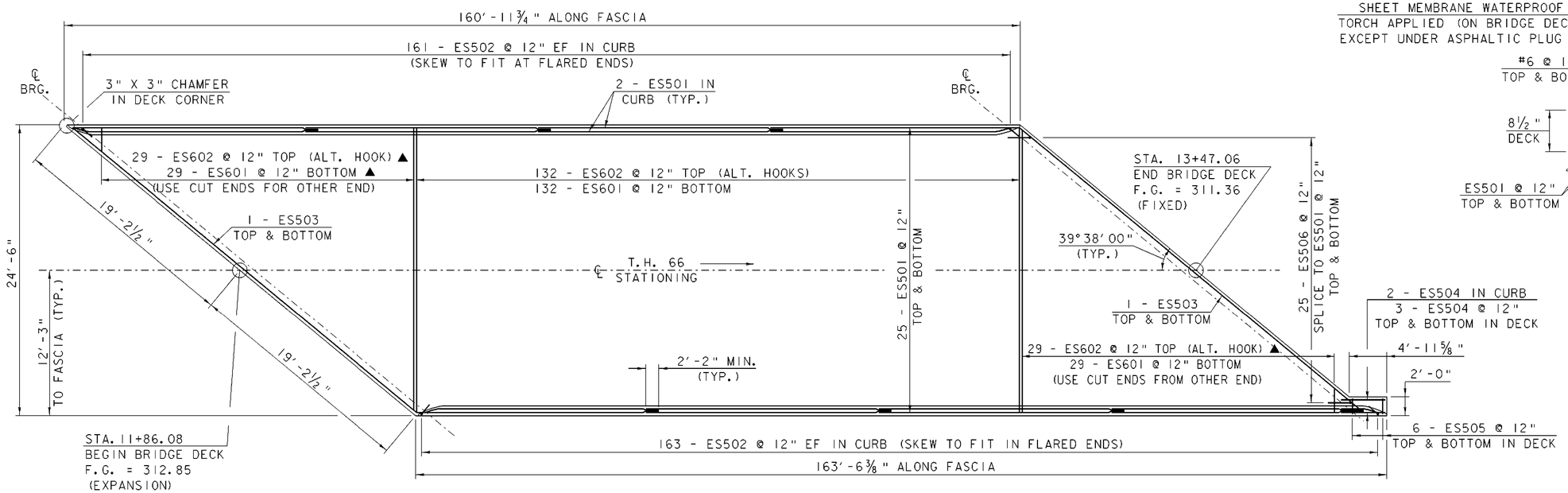

DECK REINFORCING PLAN

HORIZONTAL SCALE: 1" = 10'-0" VERTICAL SCALE: 1" = 5'-0"

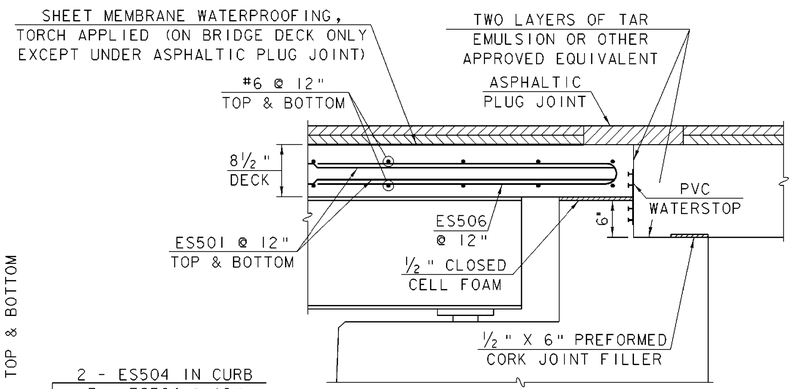

ABUTMENT NO. 2 END DETAIL

SCALE: 1" = 1'-0"

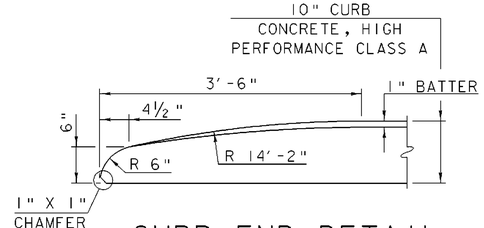

CURB END DETAIL

SCALE: 1" = 1'-0"

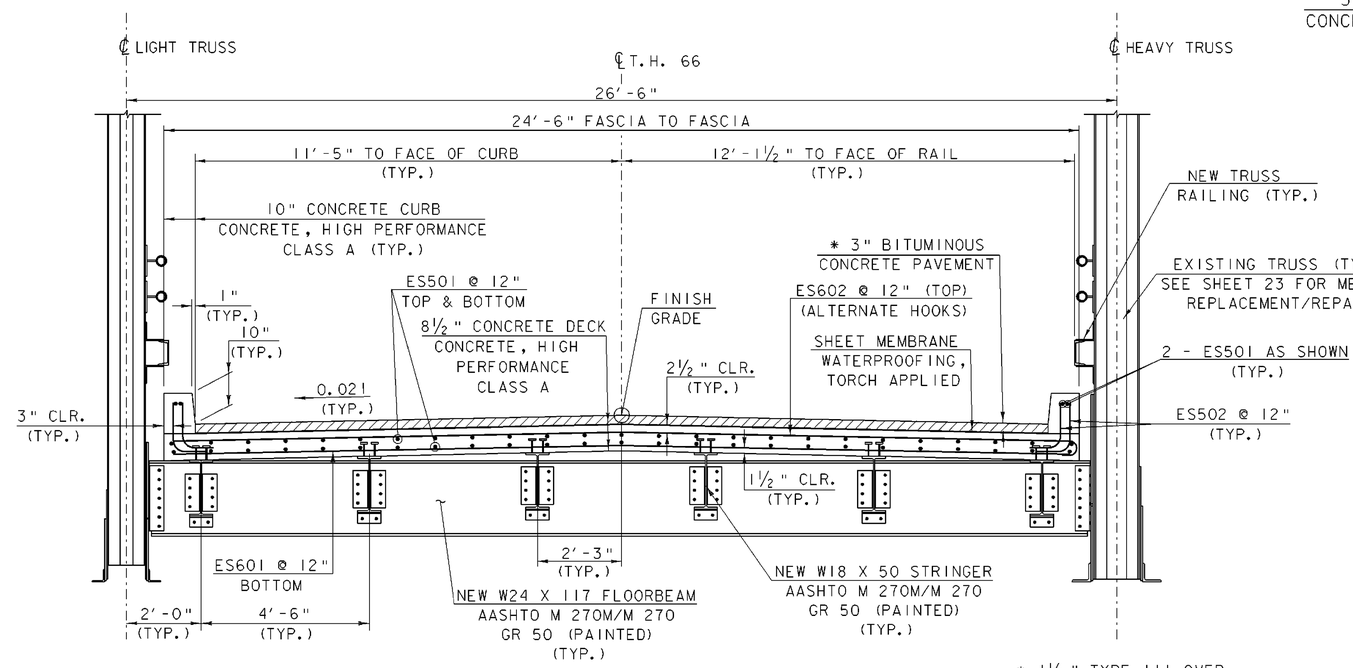

BRIDGE TYPICAL SECTION

SCALE: ½" = 1'-0"

* 1½" TYPE III OVER
1½" TYPE III

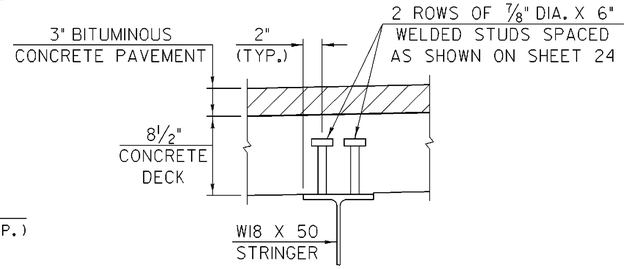

STRINGER HAUNCH & SHEAR CONNECTOR DETAILS

NTS

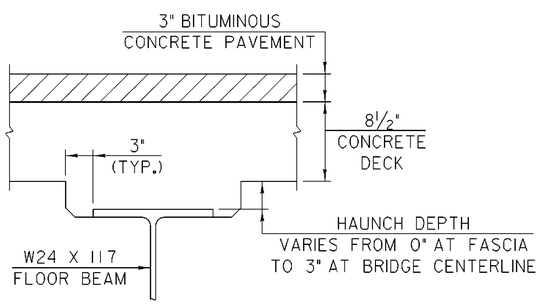

FLOOR BEAM HAUNCH DETAIL

NTS

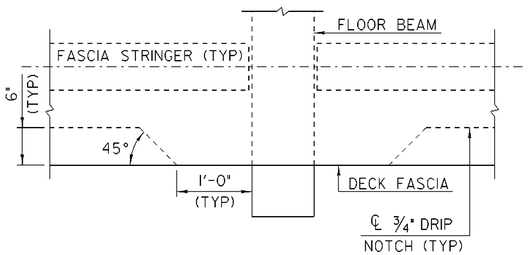

TYPICAL DRIP NOTCH DETAIL AT FLOOR BEAMS

SCALE: 1" = 1'-0"

DECK REINFORCING PLAN & BRIDGE TYPICAL SECTION

PROJECT NAME:	SPRINGFIELD
PROJECT NUMBER:	BHO 1442(30)

FILE NAME: 96J348/str/s96J348dck.dgn		PLOT DATE: 27-DEC-2007	
PROJECT MANAGER: R.R. WHITCOMB		DRAWN BY: J. PERRIGO	
DESIGNED BY:	J. PERRIGO	CHECKED BY: C. CARLSON	
s96J348dck.1		SHEET 22 OF 85	

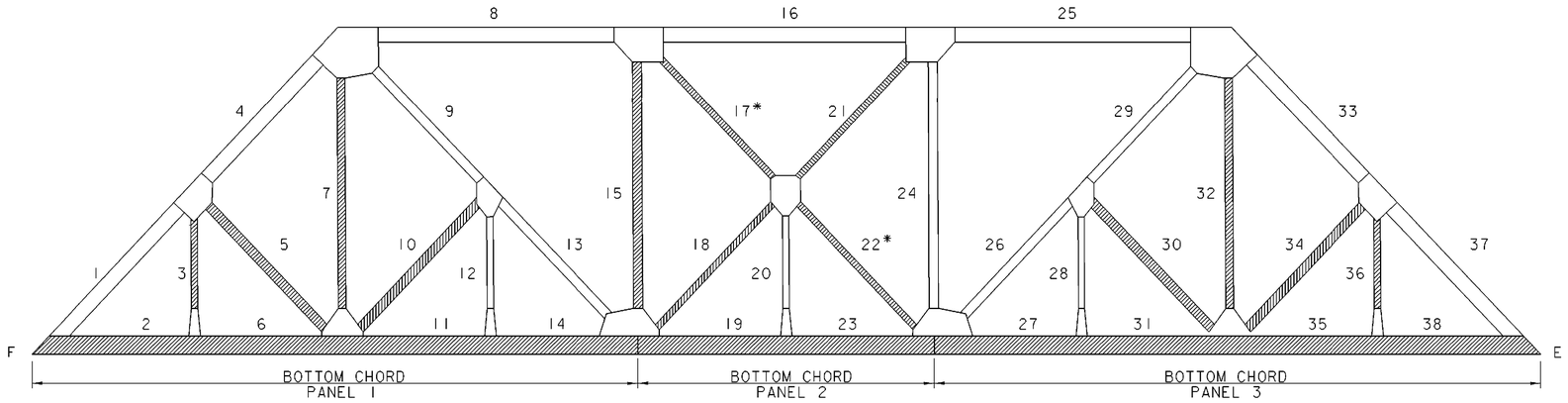

UPSTREAM FASCIA

(LIGHT TRUSS)
(LOOKING FROM ℄ ROADWAY)

LEGEND

REPLACE MEMBER

* MEMBERS 17 AND 22 ARE ONE CONTINUOUS PIECE AND SHALL BE REPLACED AS ONE PIECE.

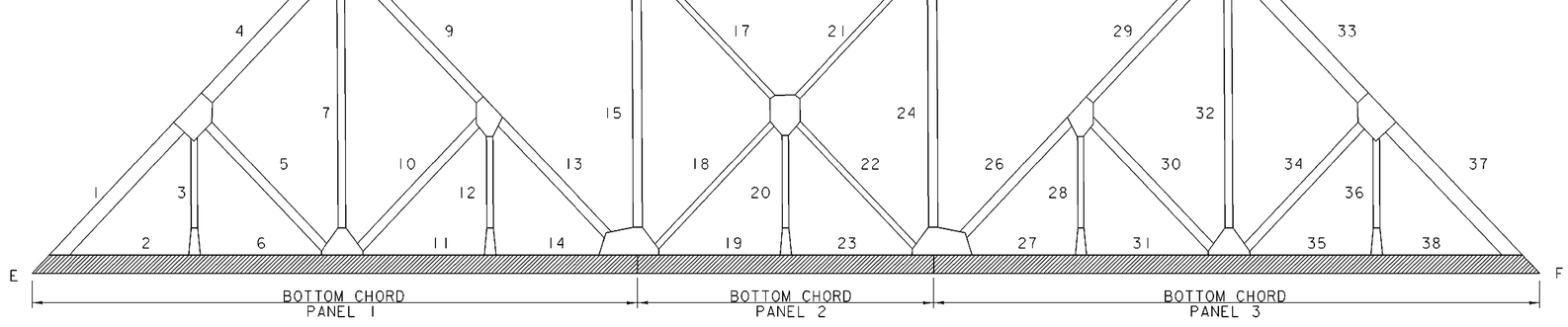

DOWNSTREAM FASCIA

(HEAVY TRUSS)
(LOOKING FROM ℄ ROADWAY)

REHABILITATION OF TRUSS BRIDGE

A. REPLACE ALL FLOOR BEAMS WITH NEW BEAMS.
B. REPLACE ALL STRINGERS WITH NEW STRINGERS WITH SHEAR CONNECTORS.
C. REPLACE BOTTOM LATERAL BRACING WITH NEW ANGLES AND PLATES.
D. REPLACE ALL CONNECTIONS BETWEEN STRINGERS AND FLOOR BEAMS AND FLOOR BEAM TO TRUSS MEMBERS.
E. REPLACE TRUSS MEMBERS AS SHOWN.
F. REPLACE BEARINGS.
G. FACE ABUTMENTS AND WINGWALLS, CAP WINGWALLS, REPAIR BRIDGE SEATS AND REPLACE BACKWALLS AS DETAILED ON SHEETS 39 THROUGH 46.
H. REPLACE BRIDGE RAILING AS DETAILED ON SHEET 37B - 37D.
I. REPLACE THE CONCRETE DECK WITH HIGH PERFORMANCE CONCRETE, ADD MEMBRANE AND PAVEMENT.
J. CLEAN AND PAINT EXISTING TRUSSES.

THE MEMBERS SHOWN ABOVE FOR REPLACEMENT ARE A MINIMUM REQUIREMENT. FIELD INSPECTION MAY REQUIRE ADDITIONAL MEMBER REPLACEMENT. ALL REPLACEMENT MEMBERS SHALL BE OF EQUAL GEOMETRY AND SECTION PROPERTIES AS THOSE BEING REPLACED. THOSE PROPERTIES ARE SHOWN ON THIS SHEET AND THE REFERENCE SHEETS ATTACHED TO THESE PLANS.

UPSTREAM TRUSS REPAIRS

BOTTOM CHORD PANEL 1: REPLACE 2 (OF 2) 4" X 4" X 3/8" ANGLES
REPLACE 2 (OF 2) 20" X 9/16" PLATES
REPLACE SINGLE LACING 2 1/2" X 3/8"
BOTTOM CHORD PANEL 2: REPLACE 2 (OF 2) 4" X 4" X 7/16" ANGLES
REPLACE 2 (OF 2) 20" X 3/4" PLATES
REPLACE SINGLE LACING 2 1/2" X 3/8"
BOTTOM CHORD PANEL 3: REPLACE 2 (OF 2) 4" X 4" X 3/8" ANGLES
REPLACE 2 (OF 2) 20" X 9/16" PLATES
REPLACE SINGLE LACING 2 1/2" X 3/8"
MEMBER 3: REPLACE 4 (OF 4) 4" X 4" X 5/16" ANGLES
REPLACE SINGLE LACING 2 1/2" X 5/16"
MEMBER 5: ~~REPLACE~~ 1 (OF 2) 10" X 20 LB/FT CHANNEL RETAINED
REPLACE DOUBLE LACING 2 1/4" X 5/16"
MEMBER 7: REPLACE 12" CB X 55 LB/FT
MEMBER 10: ~~REPLACE~~ 1 (OF 2) 10" X 20 LB/FT CHANNEL RETAINED
REPLACE DOUBLE LACING 2 1/4" X 5/16"
MEMBER 15: REPLACE 1 (OF 2) 10" X 20 LB/FT CHANNEL
REPLACE DOUBLE LACING 2 1/4" X 5/16"
* MEMBER 17: REPLACE EXISTING 12" CB X 34 LB/FT
MEMBER 18: REPLACE EXISTING 12" CB X 34 LB/FT
MEMBER 21: REPLACE EXISTING 12" CB X 34 LB/FT
* MEMBER 22: REPLACE EXISTING 12" CB X 34 LB/FT
MEMBER 30: ~~REPLACE~~ 1 (OF 2) 10" X 20 LB/FT CHANNEL RETAINED
REPLACE DOUBLE LACING 2 1/4" X 5/16"
MEMBER 32: REPLACE 12" CB X 55 LB/FT
MEMBER 34: ~~REPLACE~~ 1 (OF 2) 10" X 20 LB/FT CHANNEL RETAINED
REPLACE DOUBLE LACING 2 1/4" X 5/16"
MEMBER 36: REPLACE 4 (OF 4) 4" X 4" X 5/16" ANGLES
REPLACE SINGLE LACING 2 1/2" X 5/16"

DOWNSTREAM TRUSS REPAIRS

BOTTOM CHORD PANEL 1: REPLACE 2 (OF 2) 6" X 6" X 5/8" ANGLES
REPLACE 2 (OF 2) 24" X 5/8" PLATES
REPLACE SINGLE LACING 2 1/2" X 3/8"
BOTTOM CHORD PANEL 2: REPLACE 2 (OF 2) 6" X 6" X 3/4" ANGLES
REPLACE 2 (OF 2) 24" X 3/4" PLATES
REPLACE SINGLE LACING 2 1/2" X 3/8"
BOTTOM CHORD PANEL 3: REPLACE 2 (OF 2) 6" X 6" X 5/8" ANGLES
REPLACE 2 (OF 2) 24" X 5/8" PLATES
REPLACE SINGLE LACING 2 1/2" X 3/8"

EXISTING TRUSS MEMBER PROPERTIES

EXISTING 12" CB X 34 LB/FT

AREA = 9.99 $in.^2$
DEPTH = 12.022 in.
FLANGE WIDTH = 6.635 in.
FLANGE THICKNESS = 0.431 in.
WEB THICKNESS = 0.375 in.
I_x = 238.1 $in.^4$
S_x = 39.6 $in.^3$
r_x = 4.88 in.
I_y = 21 $in.^4$
S_y = 6.3 $in.^3$
r_y = 1.45 in.

EXISTING 12" CB X 55 LB/FT

AREA = 16.17 $in.^2$
DEPTH = 12 in.
FLANGE WIDTH = 9 in.
FLANGE THICKNESS = 0.665 in.
WEB THICKNESS = 0.375 in.
I_x = 428.4 $in.^4$
S_x = 71.4 $in.^3$
r_x = 5.15 in.
I_y = 80.9 $in.^4$
S_y = 18 $in.^3$
r_y = 2.24 in.

CB = CARNEGIE BEAM

TRUSS REPAIRS

PROJECT NAME: SPRINGFIELD
PROJECT NUMBER: BHO 1442(30)

FILE NAME: 96J348/str/s96J348sup.dgn
PROJECT MANAGER: R. R. WHITCOMB
DESIGNED BY: J. PERRIGO
s96J348trr.i

PLOT DATE: 27-DEC-2007
DRAWN BY: J. PERRIGO
CHECKED BY: C. CARLSON
SHEET 23 OF 85

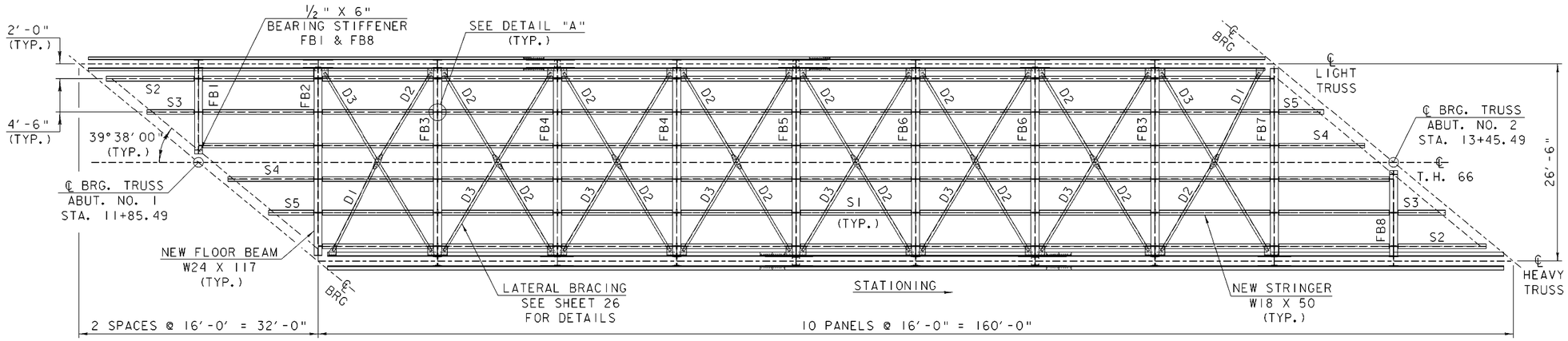

FLOOR SYSTEM FRAMING PLAN

10 2 4 6 8 10

SCALE: 1/8" = 1'-0"

(SEE SHEETS 25 & 25A FOR ADDITIONAL CONNECTION DETAILS & 25B)

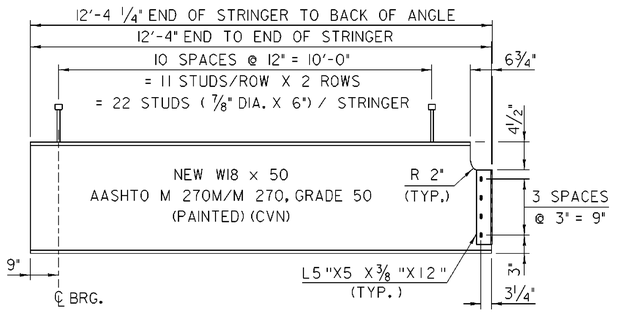

2 EA. - STRINGER S2

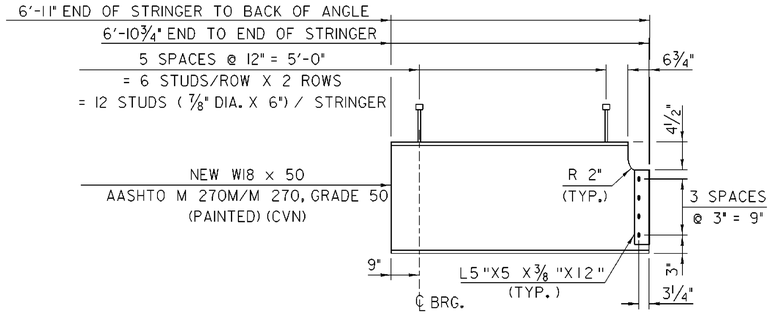

2 EA. - STRINGER S3

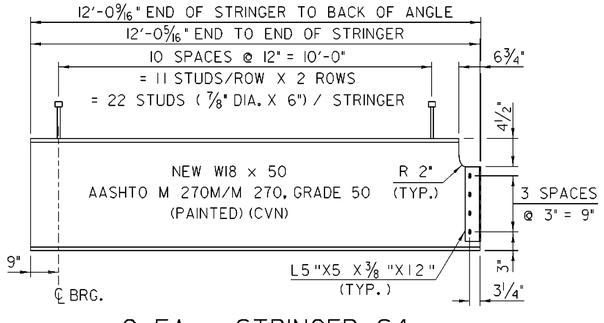

2 EA. - STRINGER S4

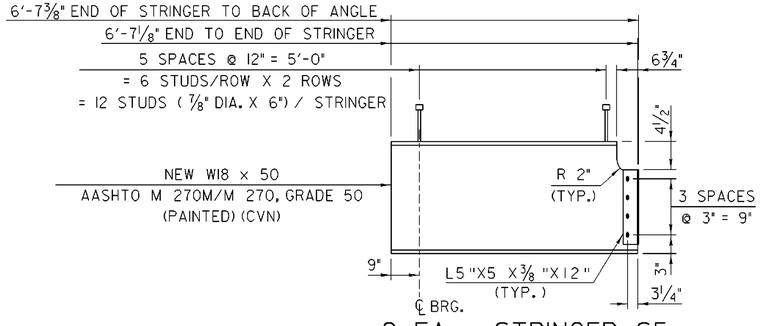

2 EA. - STRINGER S5

STRINGER ELEVATIONS

1 0 1 2 3 4

HORIZONTAL SCALE: 1/2" = 1'-0"

1 0 1 2

VERTICAL SCALE: 1" = 1'-0"

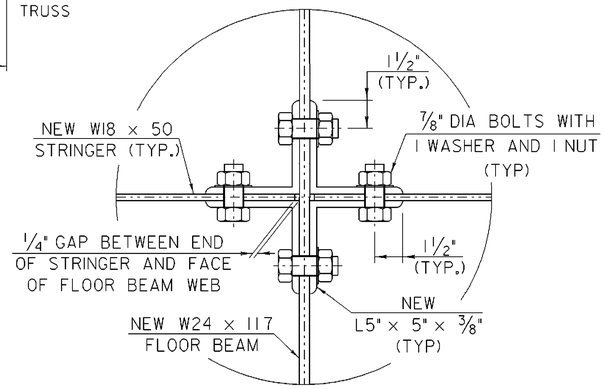

DETAIL "A" SHOWING CONNECTION BETWEEN NEW FLOOR BEAMS AND STRINGERS

0.5 0.25 0 0.25 0.5

SCALE: 3" = 1'-0"

NOTE: FLANGES OF FLOOR BEAMS AND STRINGERS NOT SHOWN FOR PURPOSES OF CLARITY.

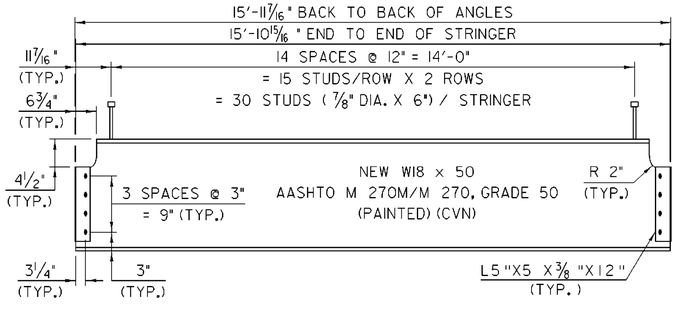

54 EA. - STRINGER S1

FRAMING PLAN

PROJECT NAME:	SPRINGFIELD
PROJECT NUMBER:	BHO 1442(30)

FILE NAME: 96J348/str/s96J348frm.dgn		PLOT DATE: 27-DEC-2007	
PROJECT LEADER: R. WHITCOMB		DRAWN BY: L. BULLOCK	
DESIGNED BY: J. PERRIGO		CHECKED BY: J. PERRIGO	
s96J348frm.i		SHEET 24	OF 85

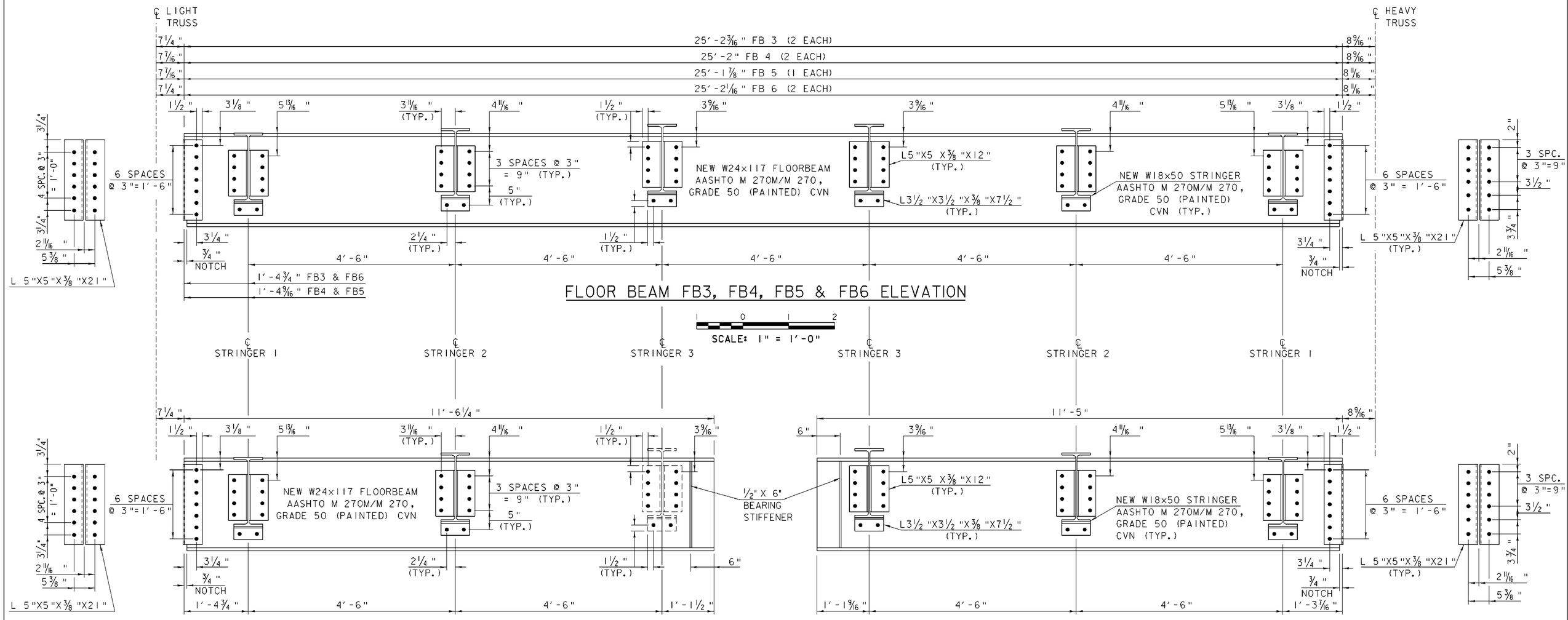

FLOOR BEAM FB3, FB4, FB5 & FB6 ELEVATION

SCALE: 1" = 1'-0"

FLOOR BEAM FB1 ELEVATION

SCALE: 1" = 1'-0"

FLOOR BEAM FB8 ELEVATION

SCALE: 1" = 1'-0"

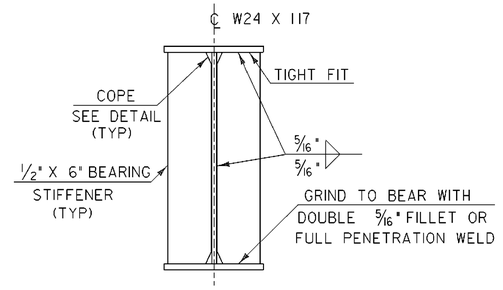

BEARING STIFFENERS @ FB1 & FB8

NTS

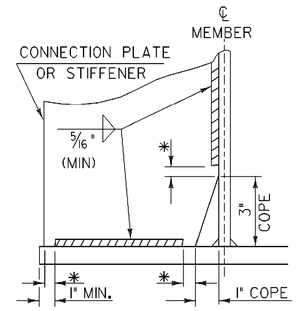

WELD TERMINATION AND COPING DETAILS FOR STEEL MEMBERS

* NO WELD FOR 3/8" MIN. 7/8" MAX. (EXCEPT MUST MAINTAIN 1" MINIMUM FROM EDGE OF FLANGE)

FLOOR BEAM ELEVATIONS

PROJECT NAME:	SPRINGFIELD
PROJECT NUMBER:	BHO 1442(30)

FILE NAME: 96j348/str/s96j348frm.dgn	PLOT DATE: 27-DEC-2007
PROJECT LEADER: R. WHITCOMB	DRAWN BY: J. PERRIGO
DESIGNED BY: J. PERRIGO	CHECKED BY: D. PETERSON
s96j348fbl.i	SHEET 25 OF 85

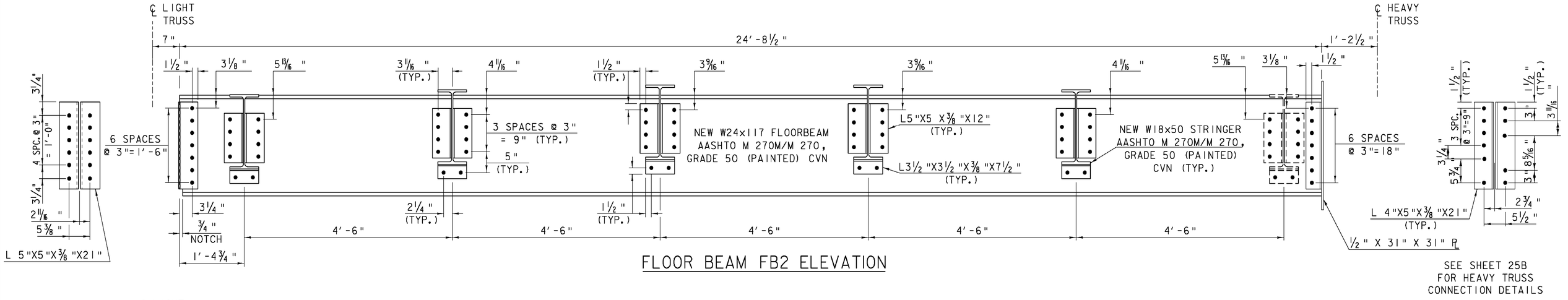

FLOOR BEAM FB2 ELEVATION

SEE SHEET 25B FOR HEAVY TRUSS CONNECTION DETAILS

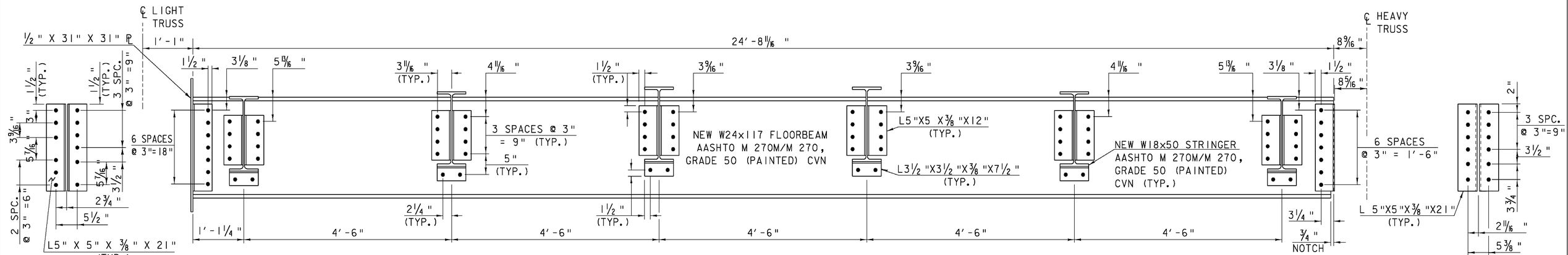

FLOOR BEAM FB7 ELEVATION

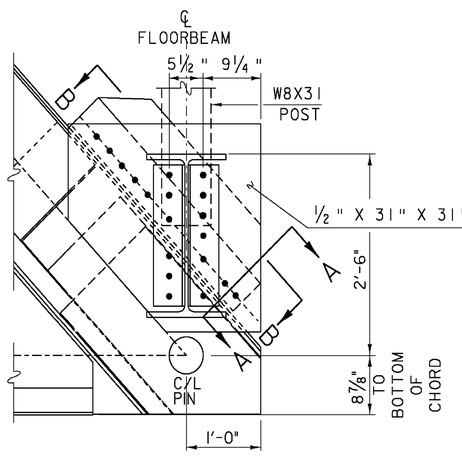

CONNECTION OF FB7 W/ LIGHT TRUSS AND RAIL POST (ABUT. NO.2 END)

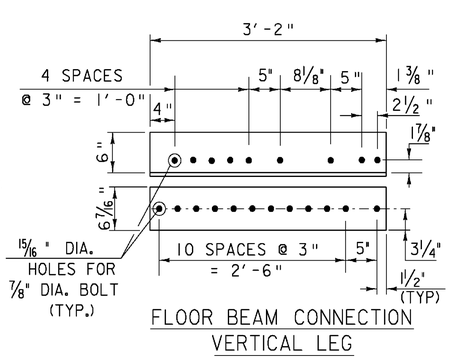

FLOOR BEAM CONNECTION VERTICAL LEG

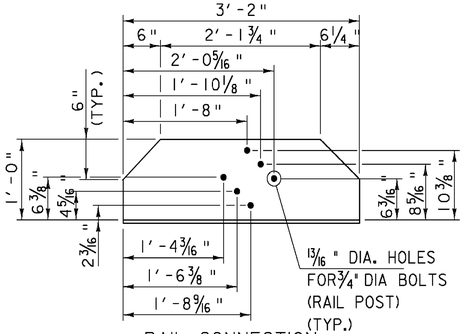

RAIL CONNECTION VERTICAL LEG

SUPPORT BRACKET DETAILS

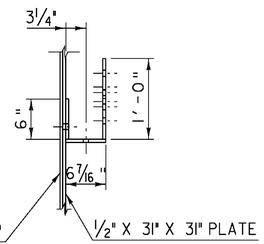

SECTION A-A SUPPORT BRACKET

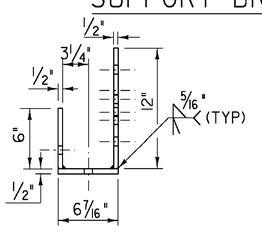

SUPPORT BRACKET

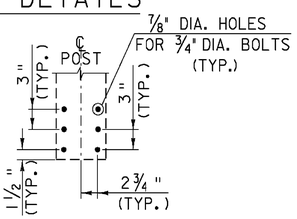

GUARD RAIL POST DETAIL FOR LIGHT TRUSS

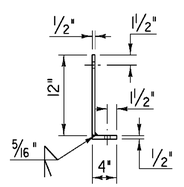

POST BRACKET

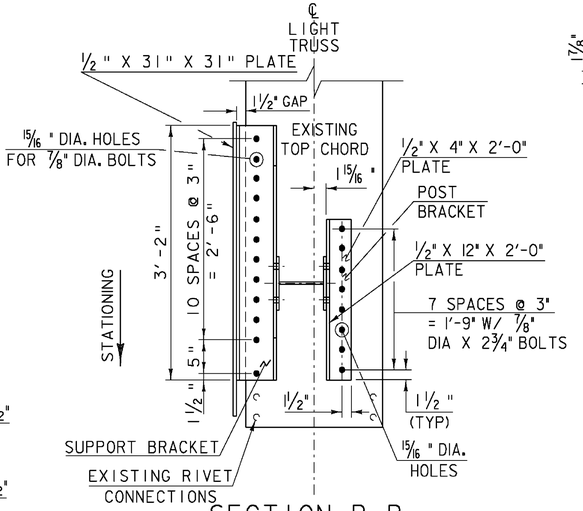

SECTION B-B

SCALE: 1" = 1′-0"

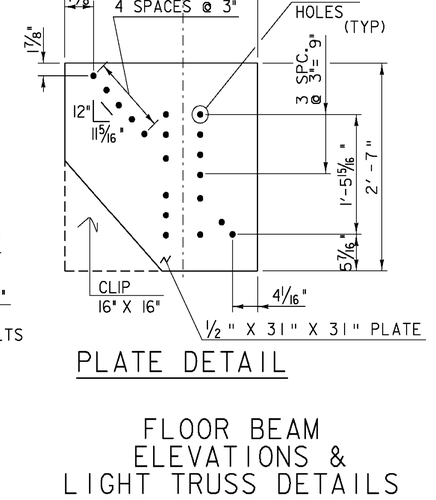

PLATE DETAIL

FLOOR BEAM ELEVATIONS & LIGHT TRUSS DETAILS

PROJECT NAME:	SPRINGFIELD
PROJECT NUMBER:	BHO 1442(30)
FILE NAME: 96J348/str/s96J348frm.dgn	PLOT DATE: 30-OCT-2008
PROJECT LEADER: R. WHITCOMB	DRAWN BY: J. PERRIGO
DESIGNED BY: J. PERRIGO	CHECKED BY: D. PETERSON
s96J348fb2.1	SHEET 25A OF 85

REVISION SHEET 10-27-08

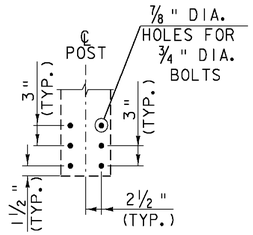

GUARD RAIL
POST DETAIL
FOR HEAVY TRUSS

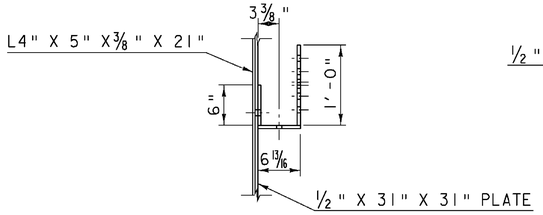

SECTION A-A
SUPPORT BRACKET

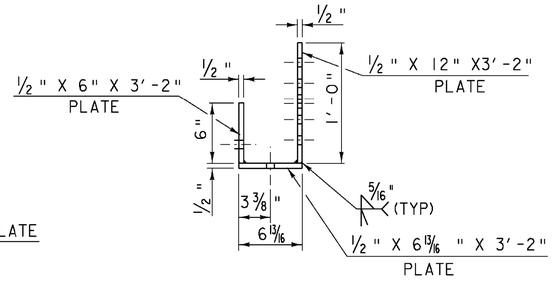

SUPPORT BRACKET

SCALE 3/4 " = 1'-0"
0 2

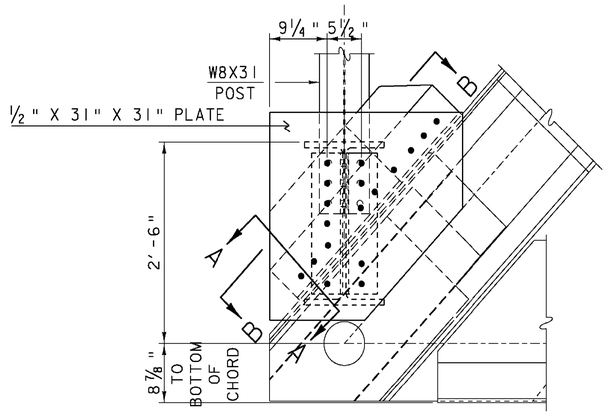

CONNECTION OF FB2
W/ HEAVY TRUSS
AND RAIL POST
(ABUT. NO. 1 END)

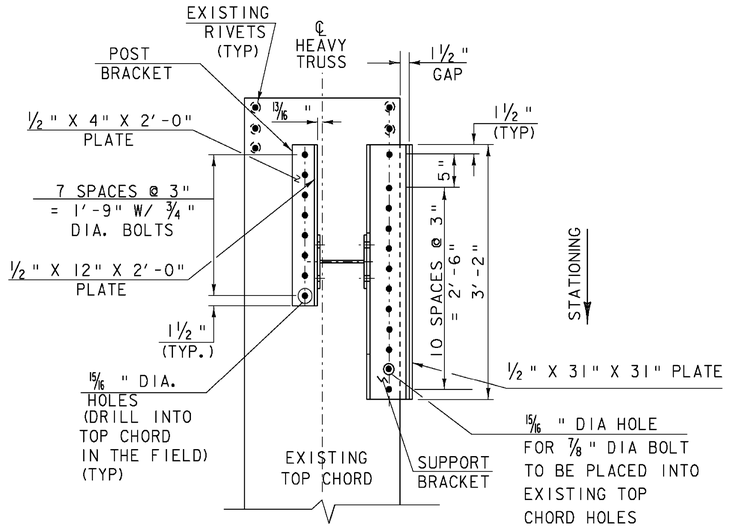

SECTION B-B

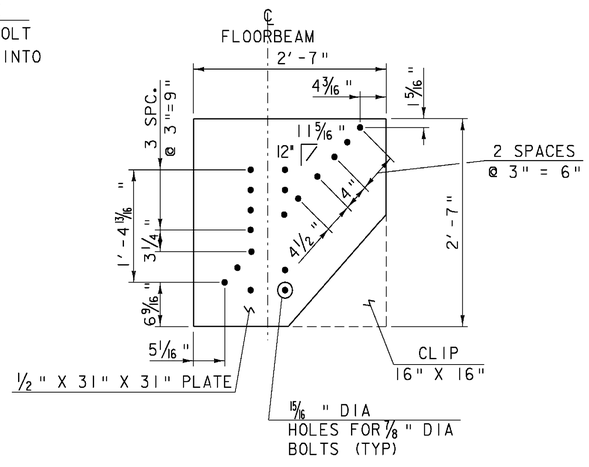

PLATE DETAIL

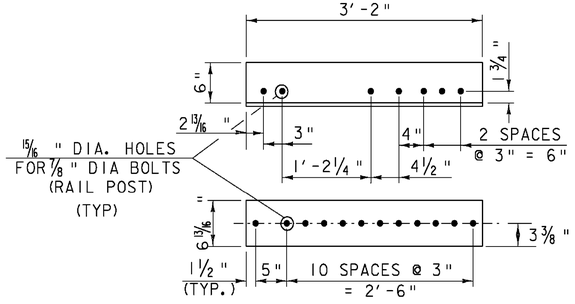

FLOOR BEAM CONNECTION
VERTICAL LEG

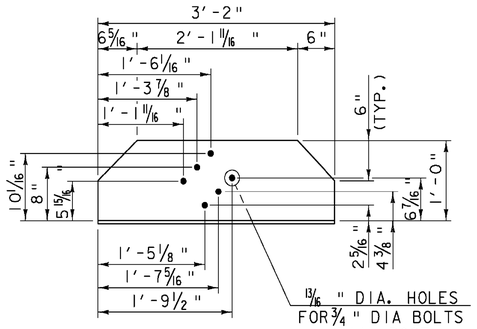

RAIL CONNECTION
VERTICAL LEG

SUPPORT BRACKET DETAILS

HEAVY TRUSS FLOOR BEAM
TO TRUSS AT ABUTMENT NO. 1
END DETAILS

1 0 1 2
SCALE: 1" = 1'-0"

NEW SHEET DUE TO REVISONS
10/27/2008

PROJECT NAME: SPRINGFIELD
PROJECT NUMBER: BHO 1442(30)

FILE NAME: 96J348/str/s96J348frm.dgn
PROJECT LEADER: R. WHITCOMB
DESIGNED BY: J. PERRIGO
s96J348fb3.1

PLOT DATE: 30-OCT-2008
DRAWN BY: J. PERRIGO
CHECKED BY: D. PETERSON
SHEET 25B OF 85

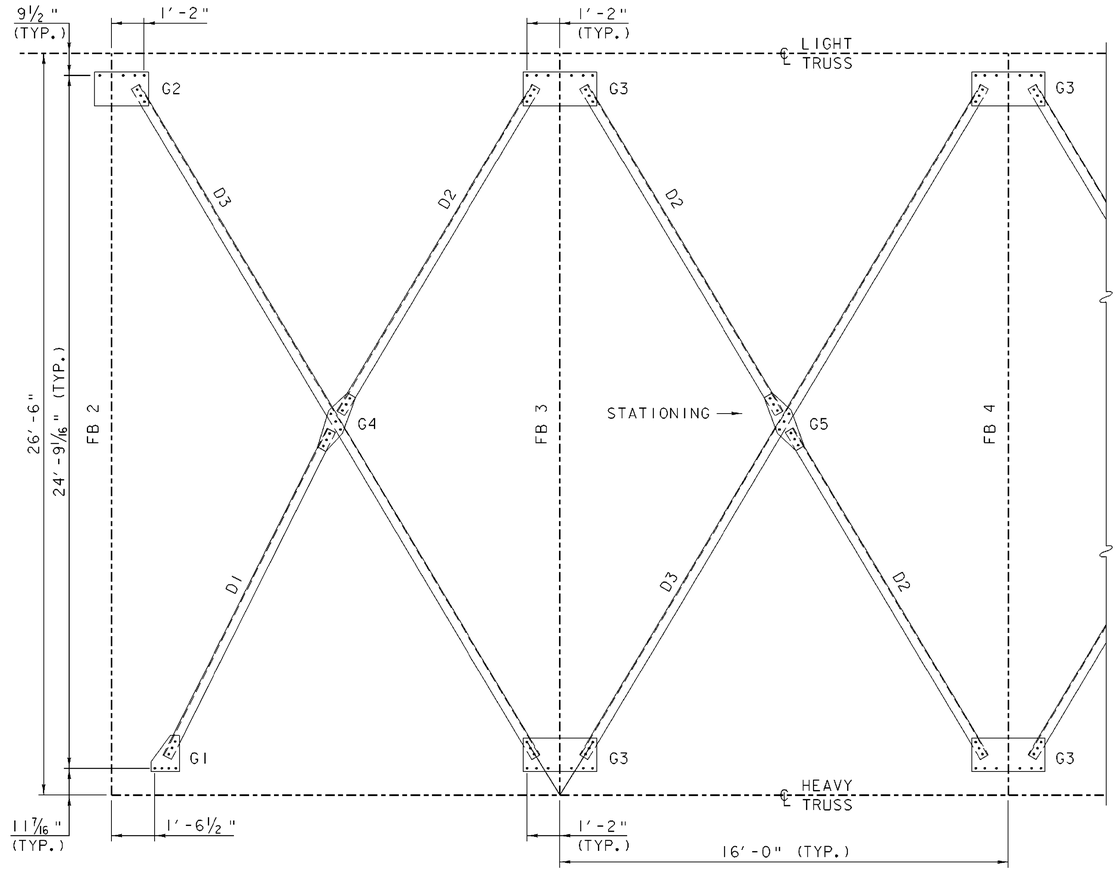

LATERAL BRACING PLAN

SCALE: 3/8" = 1'-0"

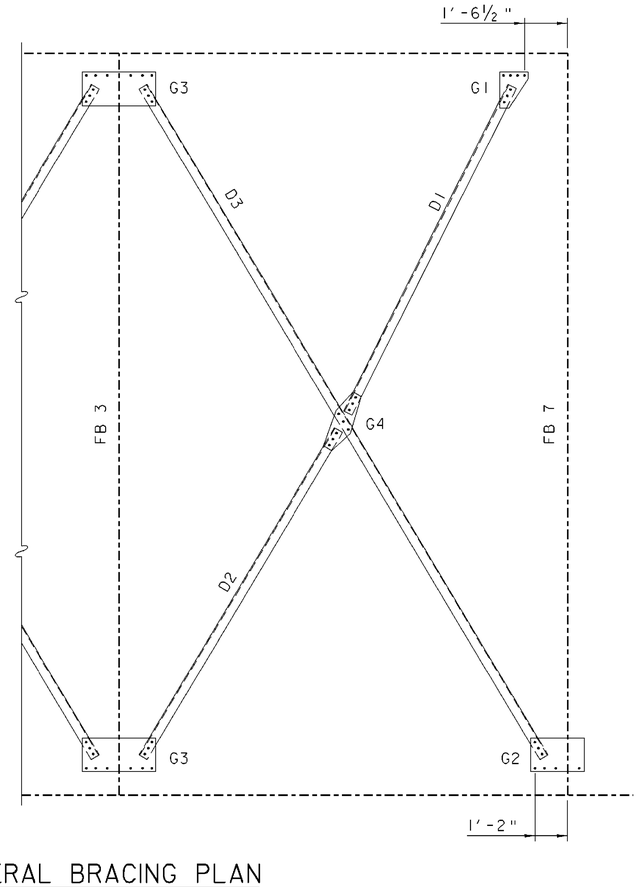

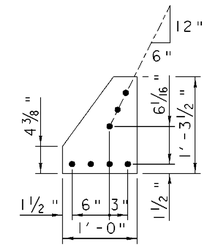

2 EA.-PLATE "G1"

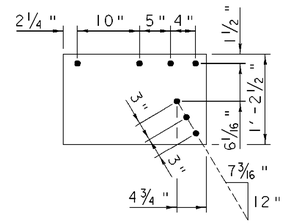

2 EA.-PLATE "G2"

LATERAL CONNECTION PLATE DETAILS

1 0 1 2

SCALE: 1" = 1'-0"

ALL PLATES ARE 3/8" THICK

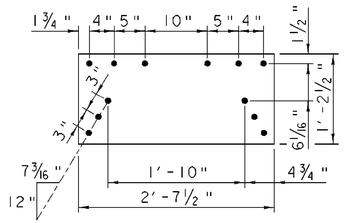

(TYP.) 14 EA.-PLATE "G3"

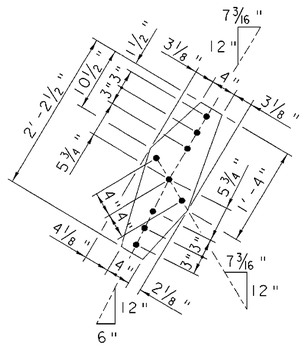

2 EA.-PLATE "G4"

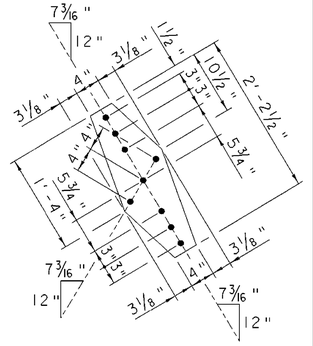

6 EA.-PLATE "G5"

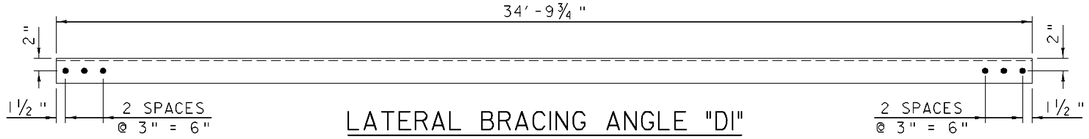

LATERAL BRACING ANGLE "D1"

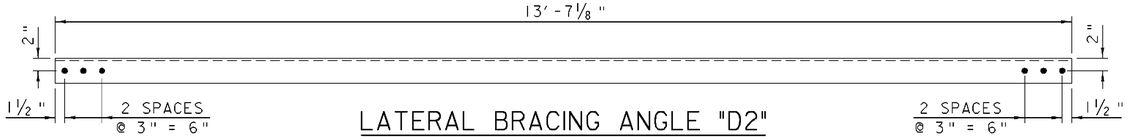

LATERAL BRACING ANGLE "D2"

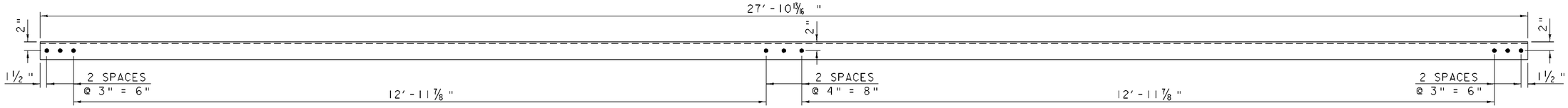

LATERAL BRACING ANGLE "D3"

LATERAL BRACING ANGLE DETAILS

1 0 1 2

SCALE: 1" = 1'-0"

LATERAL BRACING DETAILS

PROJECT NAME: SPRINGFIELD
PROJECT NUMBER: BHO 1442(30)

FILE NAME: 96j348/str/s96j348frm.dgn
PROJECT LEADER: R. WHITCOMB
DESIGNED BY: C. CARLSON
s96j348lbl.1

PLOT DATE: 27-DEC-2007
DRAWN BY: L. BULLOCK
CHECKED BY: C. CARLSON
SHEET 26 OF 85

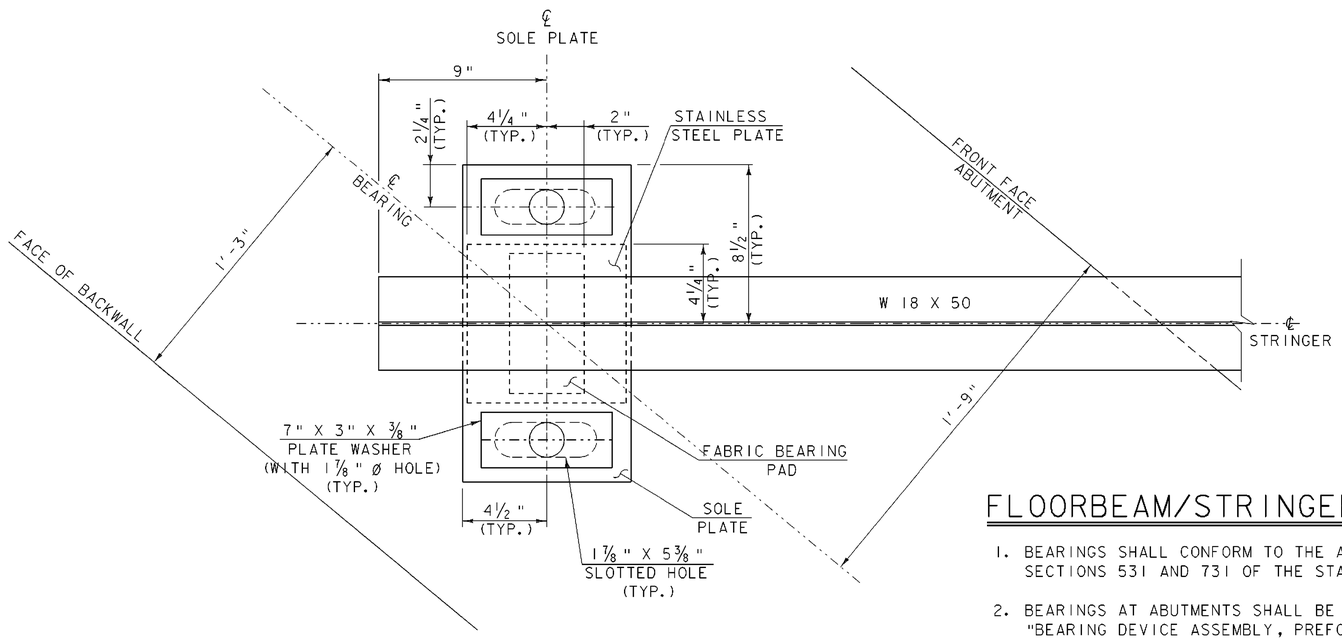

PLAN VIEW

SCALE 3" = 1'-0

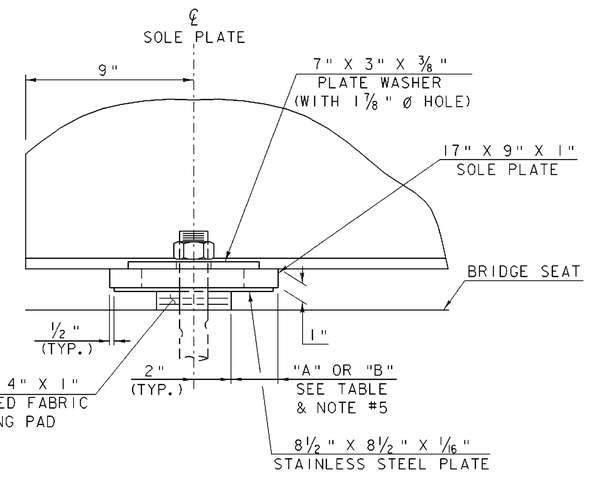

SIDE VIEW

SCALE 3" = 1'-0

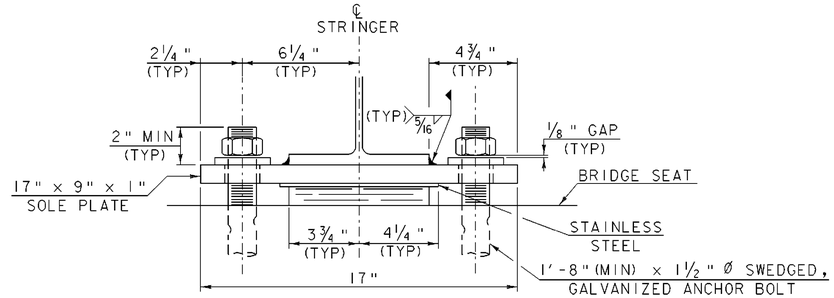

FRONT VIEW

SCALE 3" = 1'-0

FLOORBEAM/STRINGER BEARING NOTES

1. BEARINGS SHALL CONFORM TO THE APPLICABLE PROVISIONS OF SECTIONS 531 AND 731 OF THE STANDARD SPECIFICATIONS.
2. BEARINGS AT ABUTMENTS SHALL BE PAID FOR UNDER ITEM 531.10 "BEARING DEVICE ASSEMBLY, PREFORMED FABRIC PAD".
3. SHOP DRAWINGS SHALL BE SUBMITTED AS PER STANDARD SPECIFICATION 531.03. THE SUBMITTAL SHALL INCLUDE ASSOCIATED WELDING AND BONDING PROCEDURES.
4. DESIGN CRITERIA:
   - A. DESIGN FABRIC PAD TO CONCRETE PRESSURE: 1000 PSI MAXIMUM
   - B. DESIGN ROTATION: 0.015 RADIANS MINIMUM
   - C. DESIGN VERTICAL LOAD STRINGER: 31 KIPS
     DESIGN VERTICAL LOAD FLOOR BEAM: 77 KIPS
   - D. DESIGN HORIZONTAL LOAD: MINIMUM 10% OF VERTICAL LOAD
5. THE "B" DISTANCE IS THE FINAL SETTING FOR THE BEARING PAD AFTER THE CONCRETE SLAB, CURB, PAVEMENT AND BRIDGE RAIL HAVE BEEN PLACED. THE "A" DISTANCE IS FOR SETTING THE BEARING AFTER THE STRUCTURAL STEEL IS ERECTED AND BEFORE THE CONCRETE DECK IS POURED. THE DIFFERENCE IS THE THEORETICAL ELONGATION OF THE BOTTOM FLANGE DUE TO DEAD LOAD DEFLECTION. THE FINAL "B" DISTANCE SHOWN IN THE TABLE MUST BE ATTAINED WITHIN ⅛ INCH.
6. THE CONCRETE SURFACE UNDER THE BEARING DEVICE SHALL BE LEVEL.
7. ANCHOR BOLTS SHALL HAVE A MINIMUM 15 INCHES EMBEDMENT INTO THE CONCRETE AND SHALL CONFORM TO STANDARD SPECIFICATION 714.08.
8. ALL STEEL IN BEARING DEVICES (EXCEPT STAINLESS STEEL) SHALL BE AASHTO M 270M/M 270, GRADE 36 OR 50.
9. ALL BEARING DEVICES SHALL BE GALVANIZED OR METALIZED AS PER STANDARD SPECIFICATIONS 506.15 AND 531.04(b). IF THE BEARINGS ARE METALIZED, THEY SHALL BE SEALED WITH AN APPROVED SEALER AS SPECIFIED IN SUBSECTION 506.15. AREAS OF GALVANIZING OR METALIZING DAMAGED BY FIELD WELDING OR HANDLING SHALL BE REPAIRED IN CONFORMANCE WITH SUBSECTION 513.06(f).
10. ALL ANCHOR BOLTS, NUTS AND WASHERS SHALL BE GALVANIZED. ALL WASHERS SHALL BE ⅜ INCH PLATE MINIMUM. PAYMENT FOR ANCHOR BOLTS, NUTS, WASHERS AND THEIR INSTALLATIONS SHALL BE INCLUDED IN THE UNIT PRICE BID FOR ITEM 531.10, "BEARING DEVICE ASSEMBLY, PREFORMED FABRIC PAD".

STRINGER

TEMP	"A" DIST	"B" DIST
-30°F	3 9/16"	3 7/16"
-15°F	3 3/8"	3 1/4"
0°F	3 3/16"	3 1/16"
15°F	3"	2 7/8"
30°F	2 13/16"	2 11/16"
45°F	2 5/8"	2 1/2"
60°F	2 7/16"	2 5/16"
75°F	2 1/4"	2 1/8"
90°F	2 1/16"	1 15/16"
105°F	1 7/8"	1 3/4"
120°F	1 11/16"	1 9/16"

STRINGER EXPANSION BEARING DETAILS

PROJECT NAME: SPRINGFIELD
PROJECT NUMBER: BHO 1442(30)

FILE NAME: 96J348\str\s96J348brg.dgn
PROJECT MANAGER: R.R. WHITCOMB
DESIGNED BY: C. CARLSON
s96J348brgl.i

PLOT DATE: 27-DEC-2007
DRAWN BY: L. BULLOCK
CHECKED BY: C. CARLSON
SHEET 27 OF 85

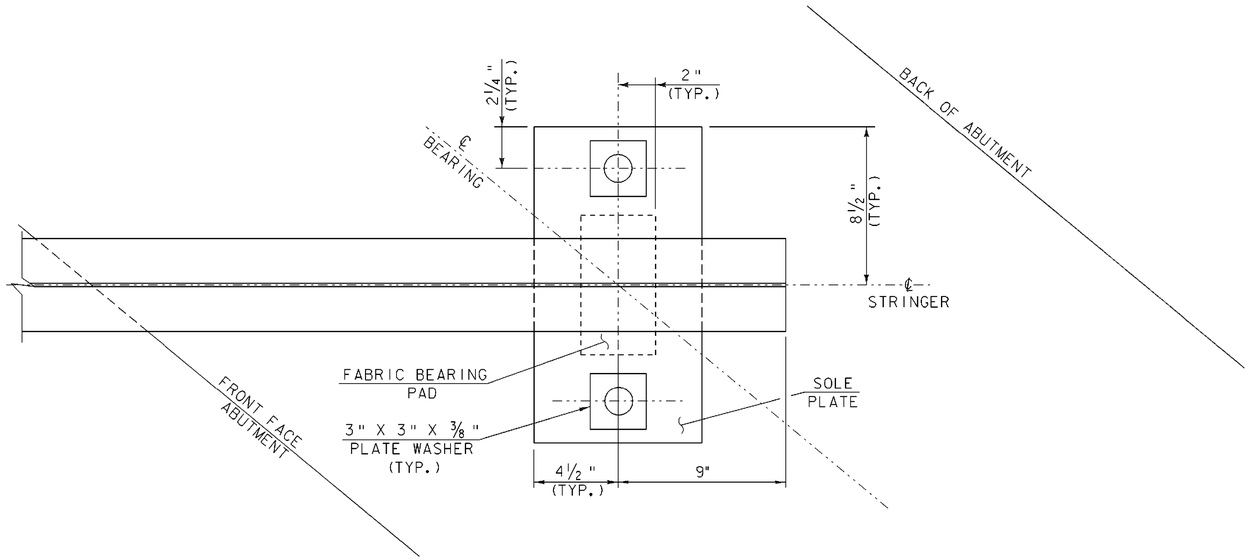

PLAN VIEW

SCALE 3" = 1'-0

1 9 6 3 0 1

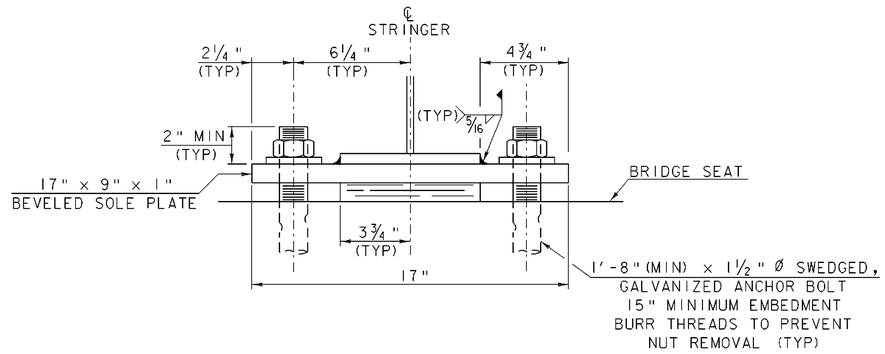

FRONT VIEW

SCALE 3" = 1'-0

1 9 6 3 0 1

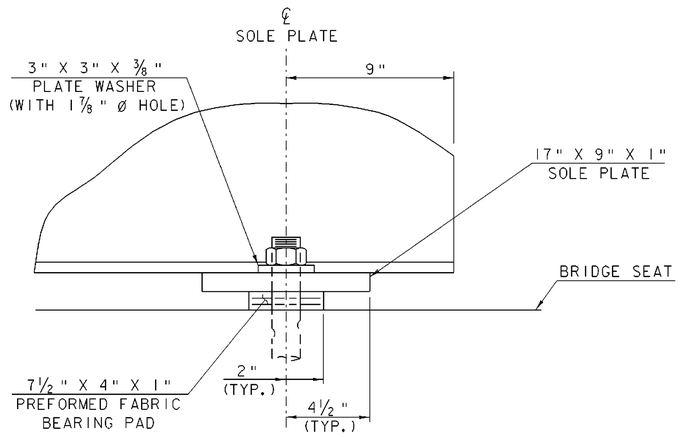

SIDE VIEW

SCALE 3" = 1'-0

1 9 6 3 0 1

STRINGER FIXED BEARING DETAILS

PROJECT NAME: SPRINGFIELD
PROJECT NUMBER: BHO 1442(30)

FILE NAME: 96J348\str\s96J348brg.dgn
PROJECT MANAGER: R. R. WHITCOMB
DESIGNED BY: C. CARLSON
s96J348brg2.i

PLOT DATE: 27-DEC-2007
DRAWN BY: L. BULLOCK
CHECKED BY: C. CARLSON
SHEET 28 OF 85

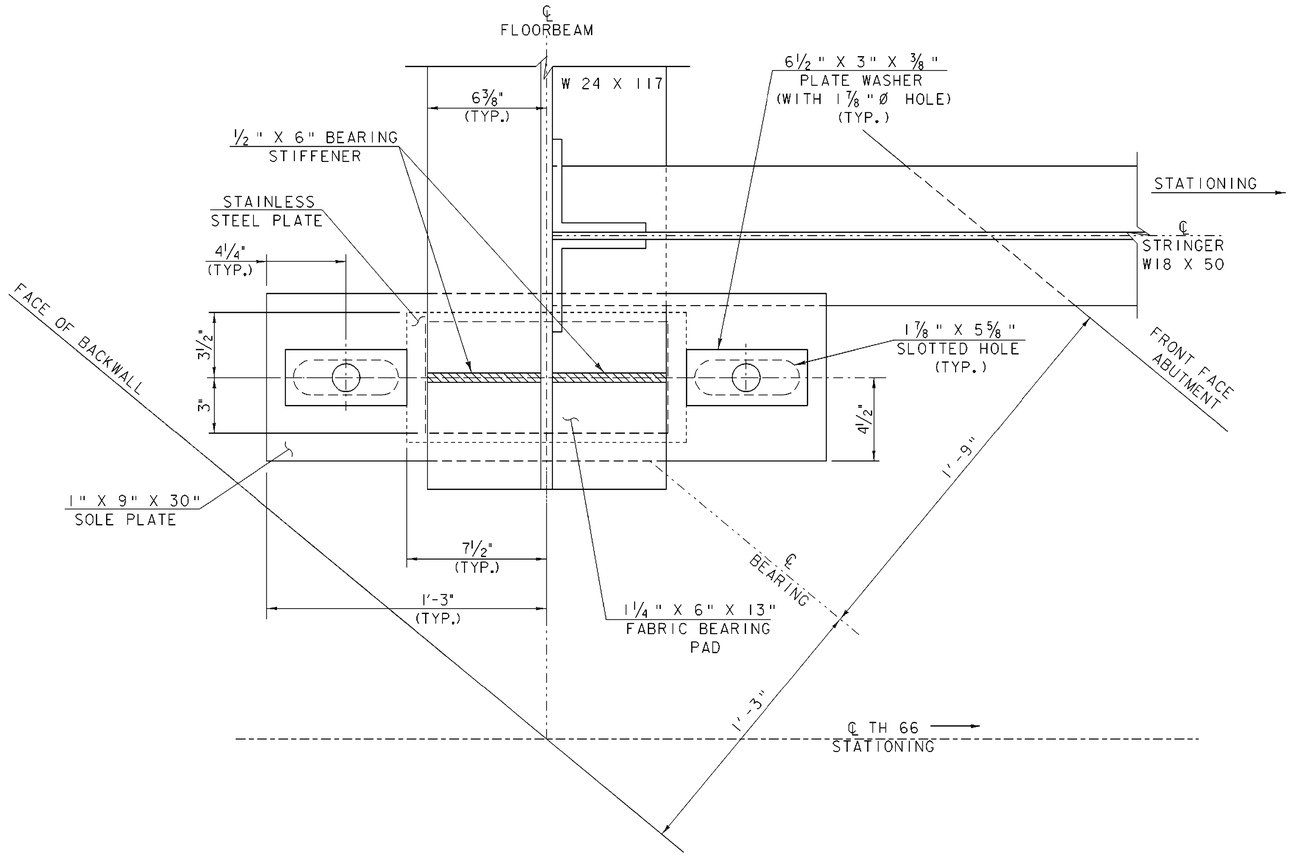

PLAN VIEW

SCALE 3" = 1'-0

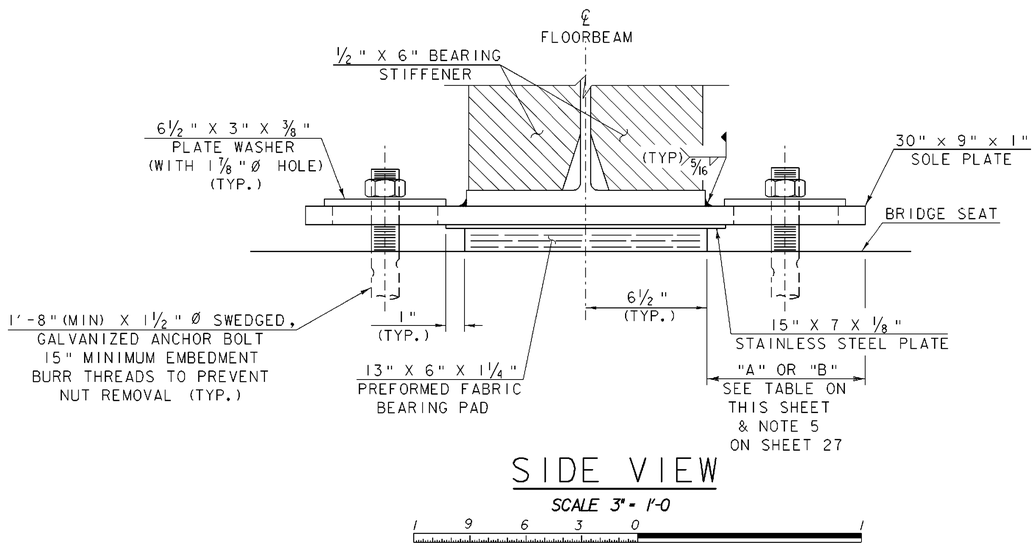

SIDE VIEW

SCALE 3" = 1'-0

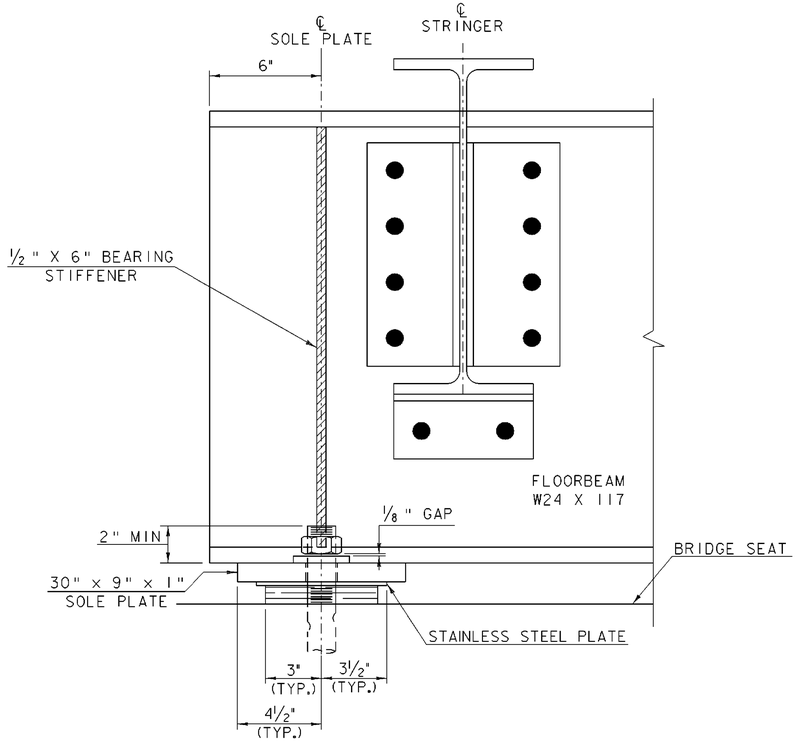

FRONT VIEW

SCALE 3" = 1'-0

FLOOR BEAM

TEMP	"A" DIST	"B" DIST
-30°F	9 9/16"	9 7/16"
-15°F	9 3/8"	9 1/4"
0°F	9 3/16"	9 1/16"
15°F	9"	8 7/8"
30°F	8 13/16"	8 11/16"
45°F	8 5/8"	8 1/2"
60°F	8 7/16"	8 5/16"
75°F	8 1/4"	8 1/8"
90°F	8 1/16"	7 15/16"
105°F	7 7/8"	7 3/4"
120°F	7 11/16"	7 9/16"

FLOORBEAM EXPANSION BEARING DETAILS

PROJECT NAME: SPRINGFIELD
PROJECT NUMBER: BHO 1442(30)

FILE NAME: 96j348\str\s96j348brg.dgn
PROJECT MANAGER: R. R. WHITCOMB
DESIGNED BY: C. CARLSON
s96j348brg3.i

PLOT DATE: 27-DEC-2007
DRAWN BY: L. BULLOCK
CHECKED BY: C. CARLSON
SHEET 29 OF 85

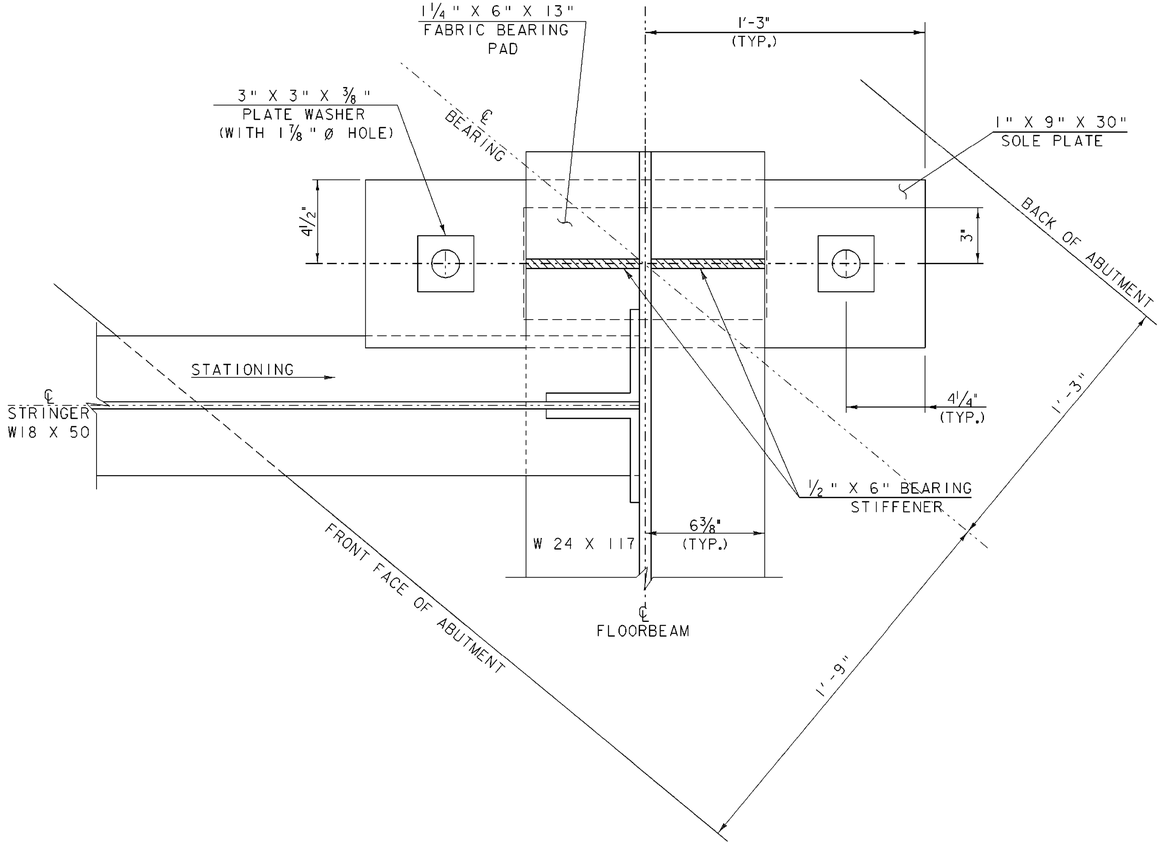

PLAN VIEW

SCALE 3" = 1'-0

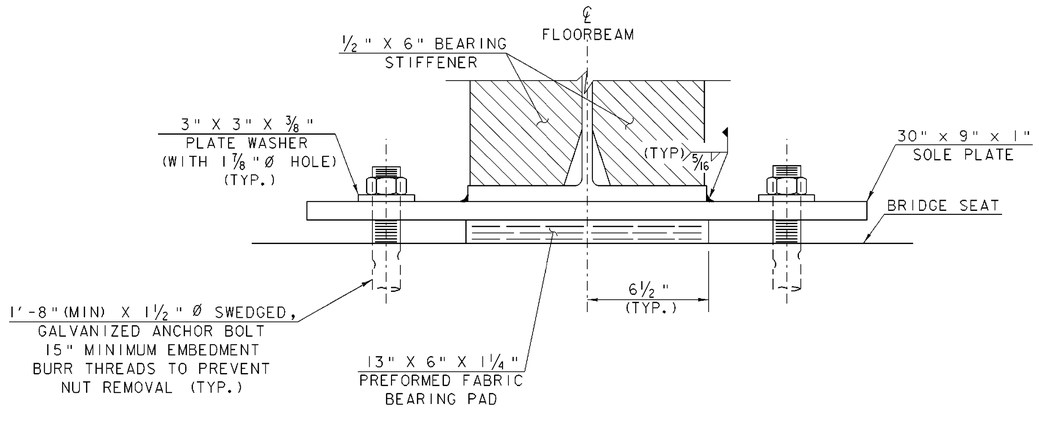

SIDE VIEW

SCALE 3" = 1'-0

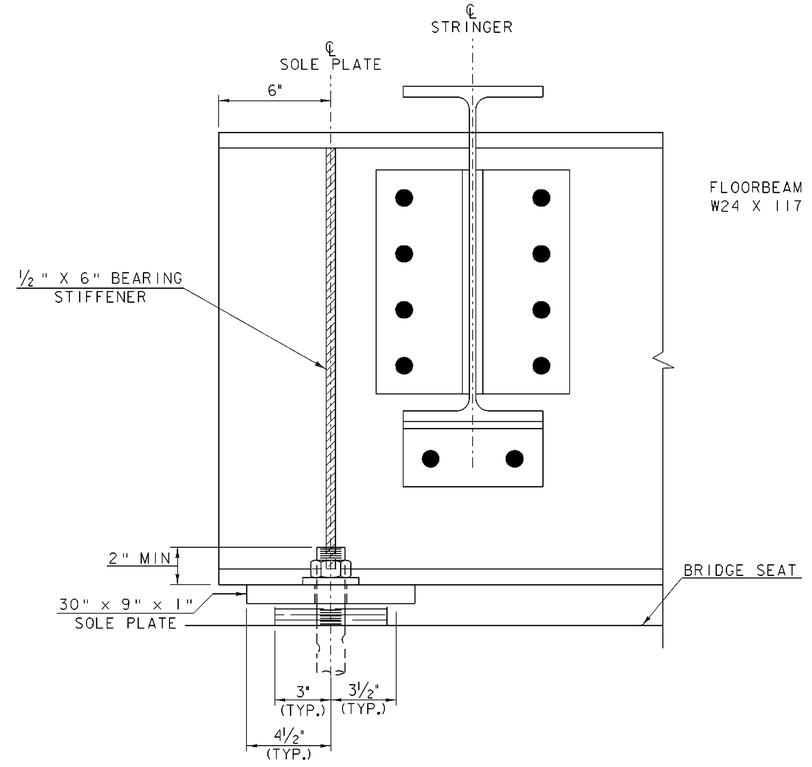

FRONT VIEW

SCALE 3" = 1'-0

FLOORBEAM
FIXED BEARING DETAILS

PROJECT NAME:	SPRINGFIELD
PROJECT NUMBER:	BHO 1442(30)

FILE NAME: 96J348\str\s96J348brg.dgn	PLOT DATE: 27-DEC-2007
PROJECT MANAGER: R. R. WHITCOMB	DRAWN BY: L. BULLOCK
DESIGNED BY: C. CARLSON	CHECKED BY: C. CARLSON
s96J348brg4.i	SHEET 30 OF 85

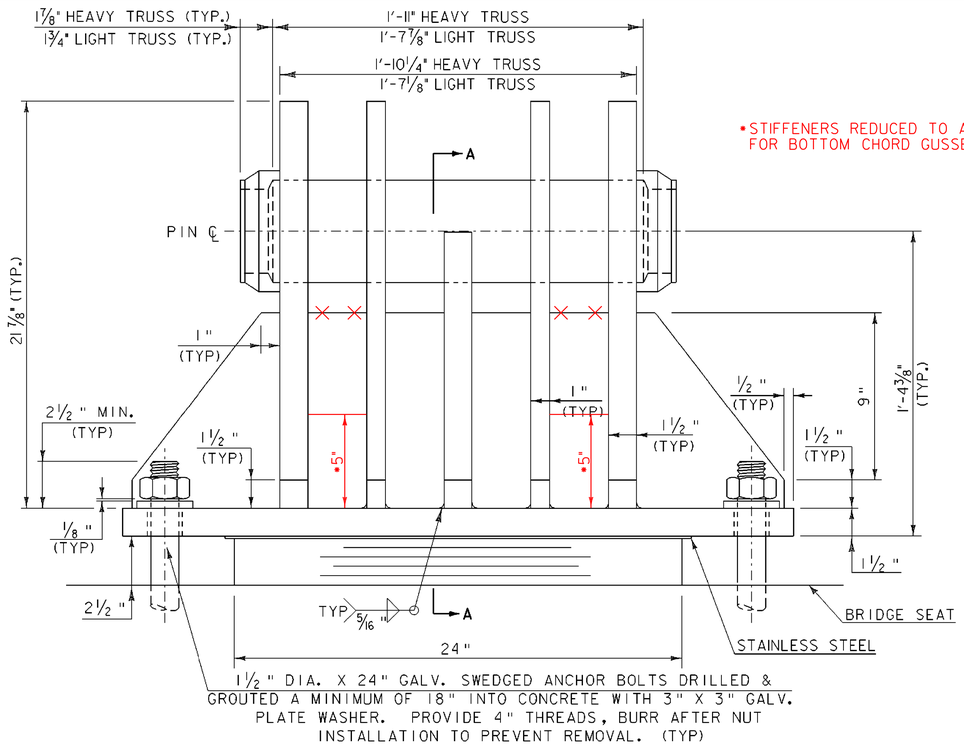

FRONT ELEVATION EXPANSION BEARING

SCALE: 3" = 1'-0"

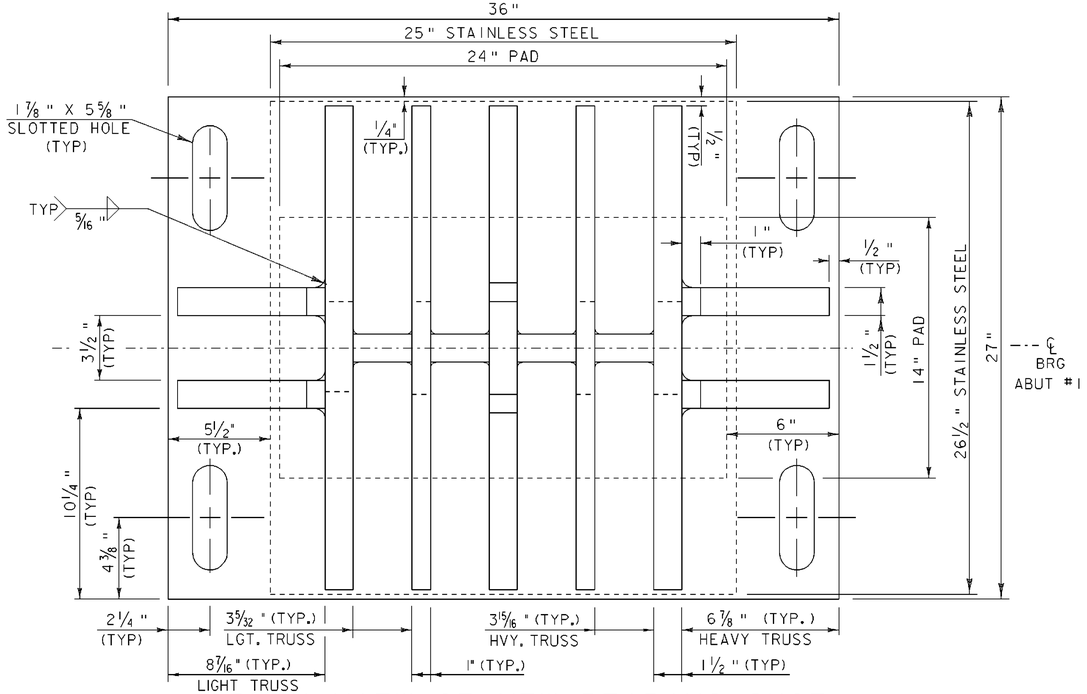

PLAN VIEW OF NEW BEARING SHOE

SCALE: 3" = 1'-0"

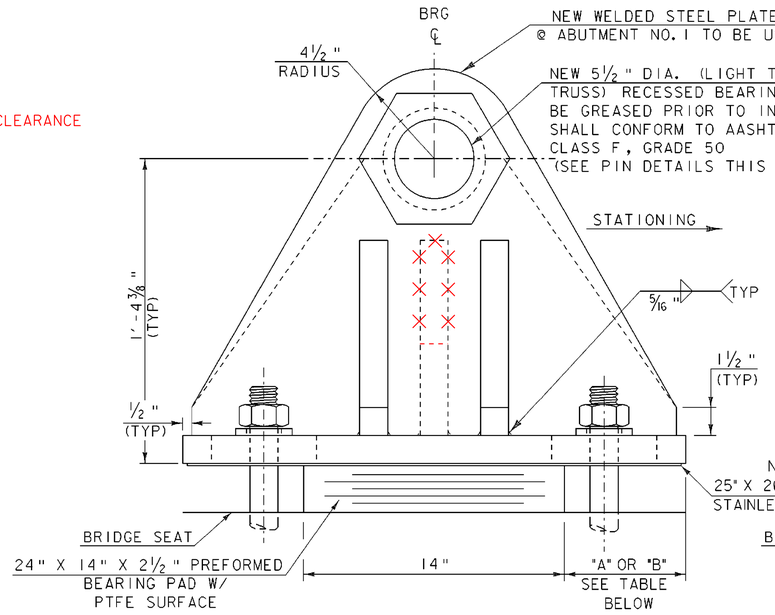

SIDE ELEVATION EXPANSION BEARING

SCALE: 3" = 1'-0"

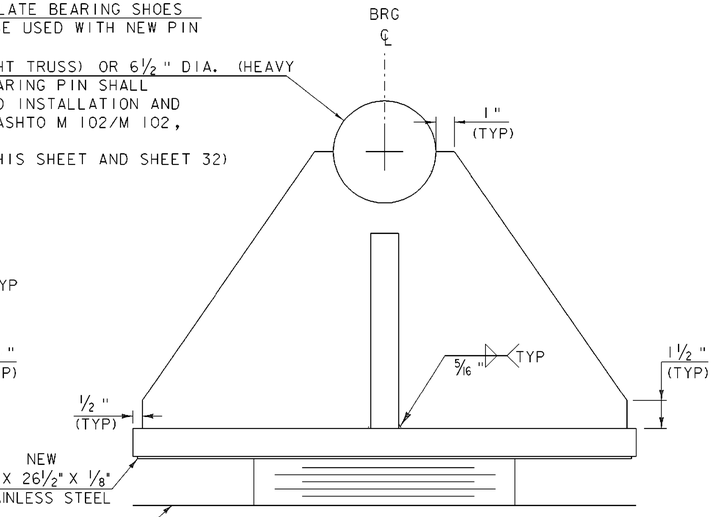

SECTION A-A

SCALE: 3" = 1'-0"

TRUSS BEARING NOTES

1) BEARINGS SHALL CONFORM TO VAOT STANDARD SPECIFICATIONS FOR CONSTRUCTION SECTIONS 531 AND 731.

2) ALL COMPONENTS OF BEARINGS, EXCEPT PINS AND STAINLESS STEEL, SHALL BE AASHTO M 270M/M 270, GRADE 50 STEEL.

3) ALL COMPONENTS OF BEARING DEVICES, EXCEPT PINS, PREFORMED PAD AND STAINLESS STEEL, SHALL BE METALIZED IN CONFORMANCE WITH VAOT STANDARD SPECIFICATIONS FOR CONSTRUCTION SUBSECTIONS 531.04(b) AND 506.15. AREAS OF METALIZING DAMAGED BY FIELD WELDING OR HANDLING SHALL BE REPAIRED IN CONFORMANCE WITH SUBSECTION 513.06(f).

4) ALL ANCHOR BOLTS, NUTS, AND WASHERS SHALL BE GALVANIZED. ALL WASHERS SHALL BE 3/8" PLATE. PAYMENT FOR ANCHOR BOLTS, NUTS, AND WASHERS SHALL BE INCLUDED IN THE UNIT BID PRICE FOR ITEM 531.13 "BEARING DEVICE ASSEMBLY, STEEL".

5) "B" DISTANCE IS THE FINAL SETTING FOR THE BEARING PAD AFTER THE CONCRETE SLAB, CURB, AND PAVEMENT ARE PLACED. "A" DISTANCE IS LISTED FOR SETTING THE BEARING BEFORE THE CONCRETE DECK AND CURBS HAVE BEEN PLACED. THE FINAL DISTANCE, AS SHOWN IN THE TABLE, MUST BE ATTAINED WITHIN 1/16 OF AN INCH.

6) ANCHOR BOLTS SHALL HAVE A MINIMUM OF 18" EMBEDMENT INTO THE EXISTING CONCRETE AND SHALL CONFORM TO SUBSECTION 714.08. THE ANCHOR BOLTS SHALL BE DRILLED AND GROUTED INTO THE ABUTMENT BRIDGE SEATS. THE DRILLING AND GROUTING OF THE ANCHOR BOLTS WILL BE INCIDENTAL TO THE ITEM 531.13 "BEARING DEVICE ASSEMBLY, STEEL".

BEARING NOTES CONTINUED ON SHEET 32

EXPANSION BEARING

TEMP	"A" DIST	"B" DIST
0°F	7 5/8"	7 1/4"
15°F	7 7/16"	7 1/16"
30°F	7 1/4"	6 7/8"
45°F	7 1/16"	6 11/16"
60°F	6 7/8"	6 1/2"
75°F	6 11/16"	6 5/16"
90°F	6 1/2"	6 1/8"
105°F	6 5/16"	5 15/16"

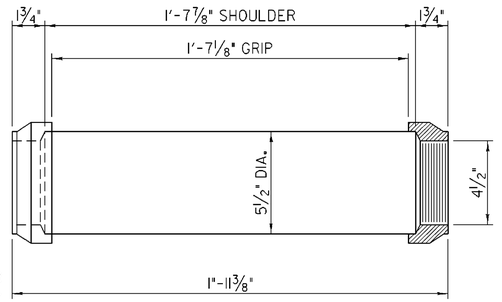

PIN DETAIL LIGHT TRUSS

SCALE: 3" = 1'-0"

TRUSS EXPANSION BEARING DETAILS

PROJECT NAME: SPRINGFIELD
PROJECT NUMBER: BHO 1442(30)

FILE NAME: 96j348\str\s96j348brg.dgn
PROJECT MANAGER: R.R. WHITCOMB
DESIGNED BY: C. CARLSON
s96j348brg5.i

PLOT DATE: 27-DEC-2007
DRAWN BY: D. PETERSON
CHECKED BY: C. CARLSON

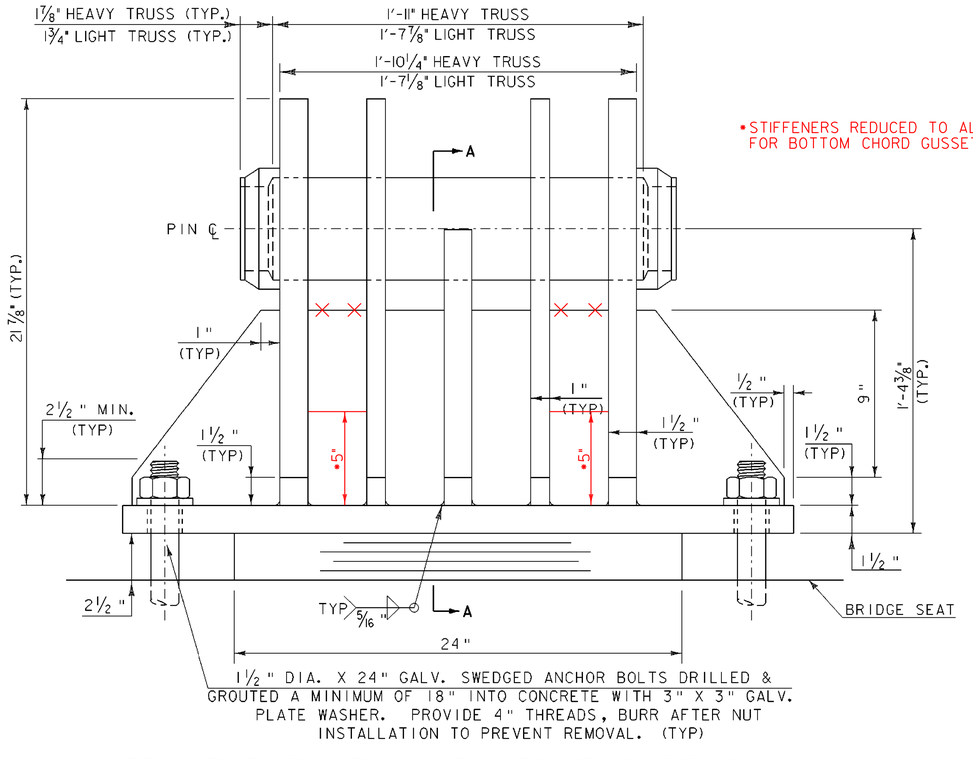

FRONT ELEVATION FIXED END BEARING

SCALE: 3" = 1'-0"

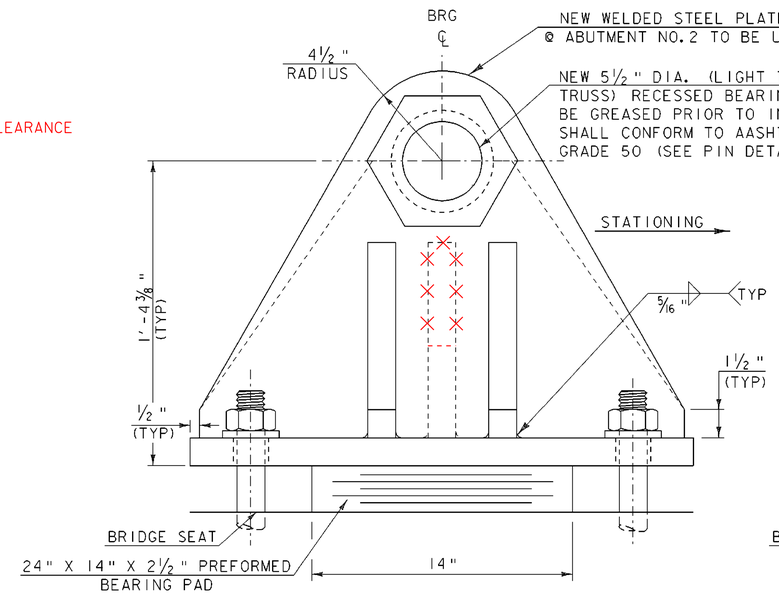

SIDE ELEVATION FIXED END BEARING

SCALE: 3" = 1'-0"

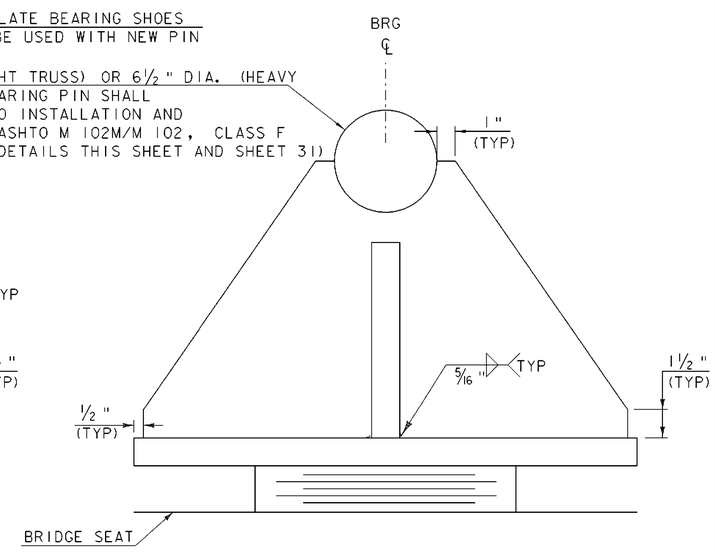

SECTION A-A

SCALE: 3" = 1'-0"

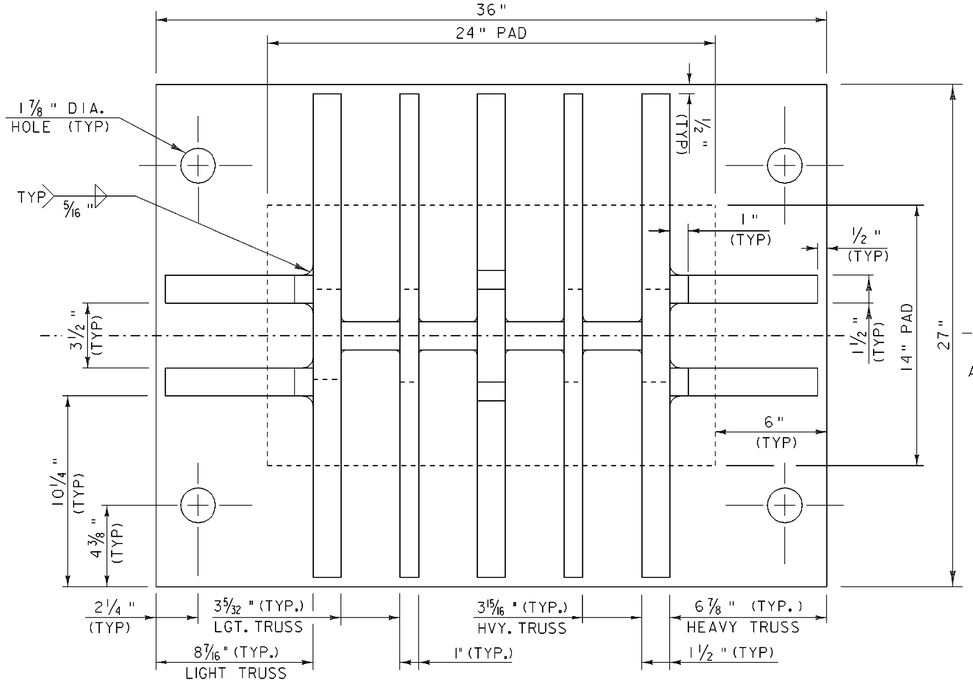

PLAN VIEW OF NEW BEARING SHOE

SCALE: 3" = 1'-0"

TRUSS BEARING NOTES CONTINUED

7) EXISTING ANCHOR BOLTS SHALL BE CUT AT CUT LINE ELEVATION SHOWN ON SHEET 39 OR PULLED OUT IF THIS CAN BE DONE WITHOUT DAMAGE TO EXISTING CONCRETE. THIS WORK WILL BE INCIDENTAL TO ITEM 529.20 "PARTIAL REMOVAL OF STRUCTURE".

8) REMOVAL OF EXISTING TRUSS BEARINGS SHALL BE PAID FOR AS PART OF ITEM 529.20, "PARTIAL REMOVAL OF STRUCTURE".

9) DESIGN CRITERIA:
- A: PAD TO CONCRETE DESIGN PRESSURE = 1000 PSI
- B: MINIMUM ALLOWABLE DESIGN ROTATION = 0.015 RADIANS
- C: HORIZONTAL CAPACITY SHALL BE MINIMUM OF 10% VERTICAL CAPACITY.
- D: DESIGN LOAD PER TRUSS BEARING = 323 KIPS
  - RDL = 221 KIPS
  - RLL = 102 KIPS

10) SHOP DRAWINGS CONFORMING TO SUBSECTION 531.03 SHALL BE SUBMITTED TO INCLUDE WELDING AND BONDING PROCEDURES.

11) THE FABRICATOR SHALL METALIZE THE BEARINGS IN ACCORDANCE WITH SUBSECTION 506.15 (b) AFTER FABRICATION AND SHOP APPLY A PAINT SYSTEM MEETING SPECIFICATION 513 TO THE OUTSIDE OF THE BEARINGS. THE FINAL COLOR SHALL BE ~~GREEN~~ BLACK COLOR CHIP # ~~14062~~ 27038. THE COST OF ANY METALIZING OR SHOP APPROVED PAINT WILL BE CONSIDERED INCIDENTAL TO ITEM 531.13 "BEARING DEVICE ASSEMBLY, STEEL".

12) ITEM 531.13, "BEARING DEVICE ASSEMBLY, STEEL" SHALL INCLUDE THE FABRIC BEARING PADS, ANCHOR BOLTS, WASHERS, STAINLESS STEEL, SOLE PLATES, NEW STEEL PLATES THAT MAKE UP BEARING, PINS, ANCHOR BOLTS, WASHERS, NUTS, WELDING, INSTALLATION AND OTHER INCIDENTALS REQUIRED TO CONSTRUCT THE TRUSS BEARINGS.

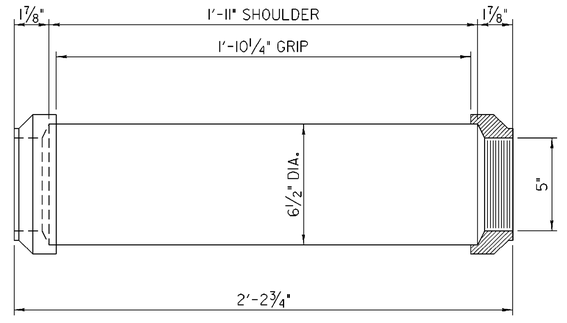

PIN DETAIL HEAVY TRUSS

SCALE: 3" = 1'-0"

TRUSS FIXED BEARING DETAILS

PROJECT NAME:	SPRINGFIELD
PROJECT NUMBER:	BHO 1442(30)
FILE NAME: 96J348\str\s96J348brg.dgn	PLOT DATE: 27-DEC-2007
PROJECT MANAGER: R.R. WHITCOMB	DRAWN BY: D. PETERSON
DESIGNED BY: C. CARLSON	CHECKED BY: C. CARLSON
s96J348brg6.i	SHEET 32 OF 85

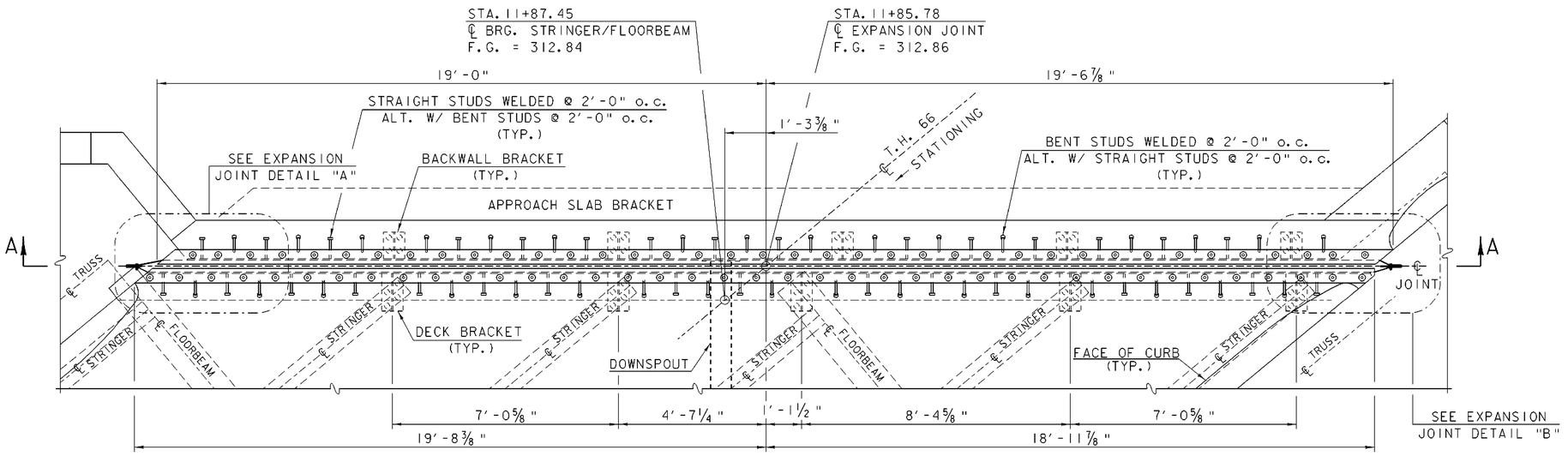

EXPANSION JOINT PLAN AT ABUTMENT NO. 1

FLOW

SCALE: 1/2" = 1'-0"

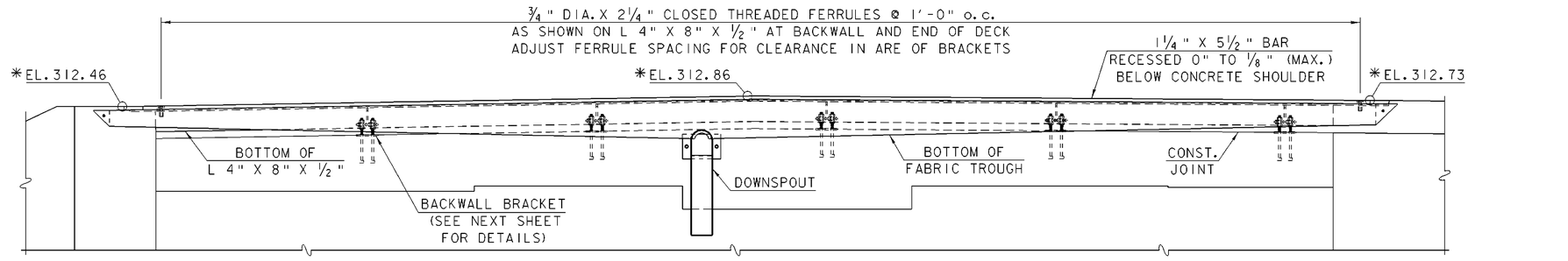

SECTION "A-A"

SCALE: 1/2" = 1'-0"

* ELEVATIONS SHOWN ARE AT CENTERLINE EXPANSION JOINT

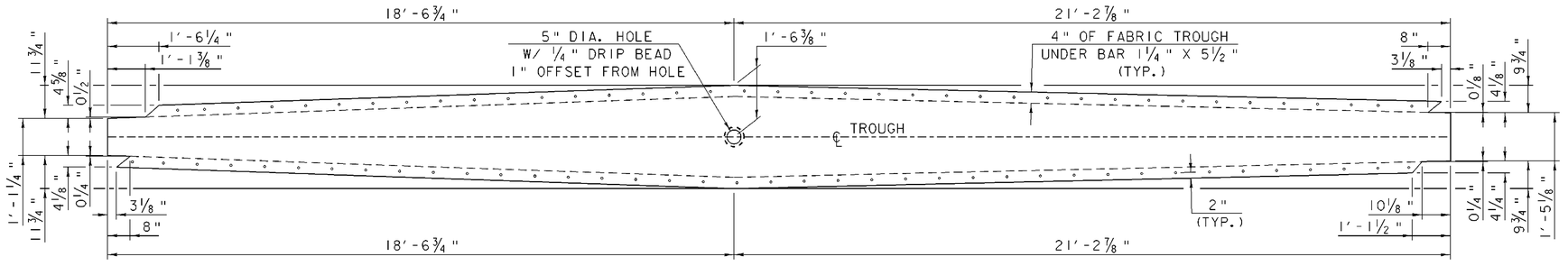

FABRIC TROUGH PLAN

SCALE: 1/2" = 1'-0"

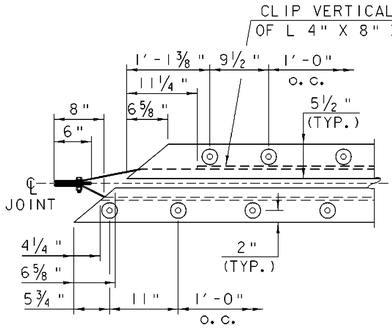

EXPANSION JOINT DETAIL "A"

SCALE: 1" = 1'-0"

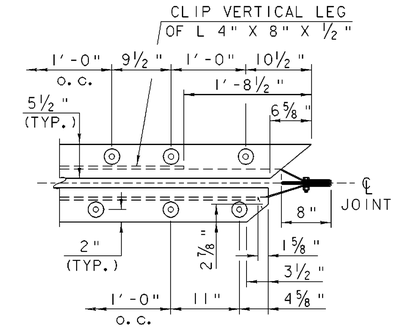

EXPANSION JOINT DETAIL "B"

SCALE: 1" = 1'-0"

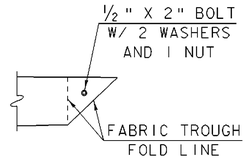

FABRIC TROUGH FOLD DETAIL

SCALE: 1" = 1'-0"

EXPANSION JOINT PLAN AND ELEVATION

PROJECT NAME:	SPRINGFIELD
PROJECT NUMBER:	BHO 1442(30)

FILE NAME: 96J348/str/s96J348sup.dgn	PLOT DATE: 27-DEC-2007
PROJECT MANAGER: R. R. WHITCOMB	DRAWN BY: D. PETERSON
DESIGNED BY: J. PERRIGO	CHECKED BY: C. CARLSON
s96J348ejp.1	SHEET 33 OF 85

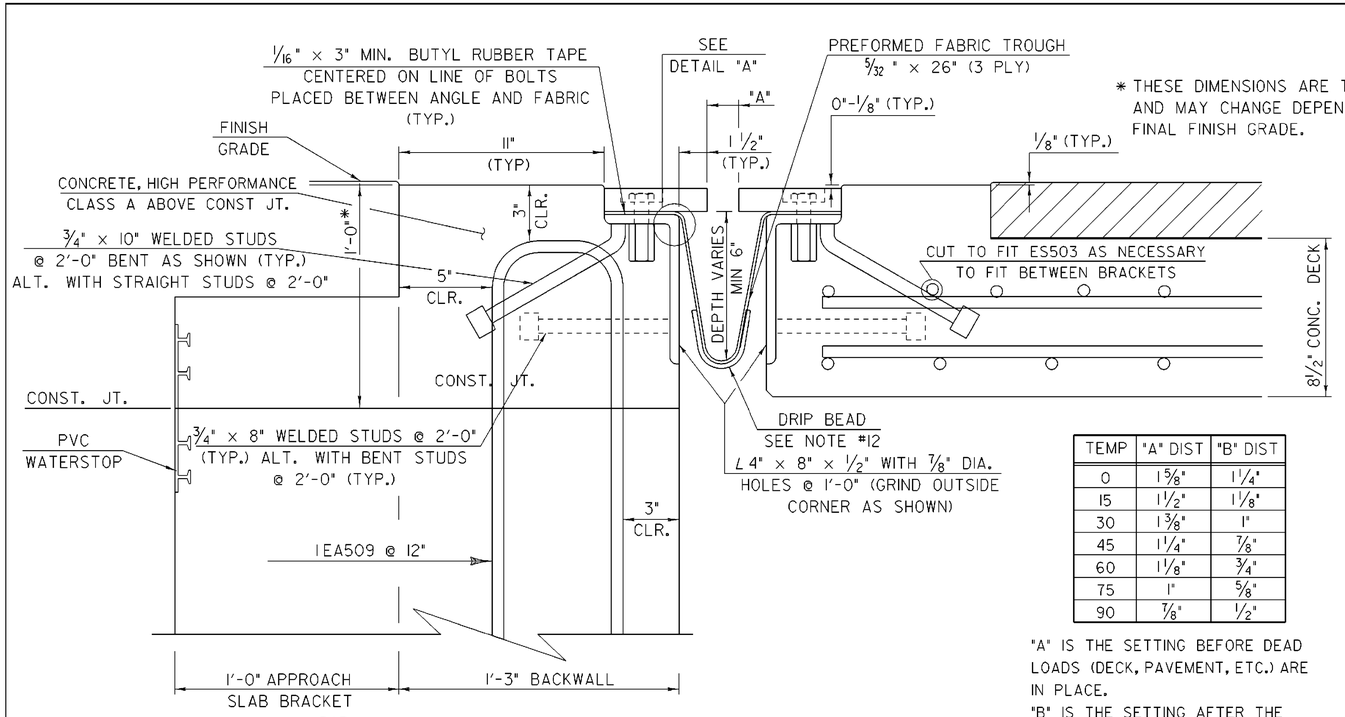

* THESE DIMENSIONS ARE THEORETICAL AND MAY CHANGE DEPENDING UPON THE FINAL FINISH GRADE.

TEMP	"A" DIST	"B" DIST
0	1 5/8"	1 1/4"
15	1 1/2"	1 1/8"
30	1 3/8"	1"
45	1 1/4"	7/8"
60	1 1/8"	3/4"
75	1"	5/8"
90	7/8"	1/2"

"A" IS THE SETTING BEFORE DEAD LOADS (DECK, PAVEMENT, ETC.) ARE IN PLACE.
"B" IS THE SETTING AFTER THE DEAD LOADS ARE IN PLACE.

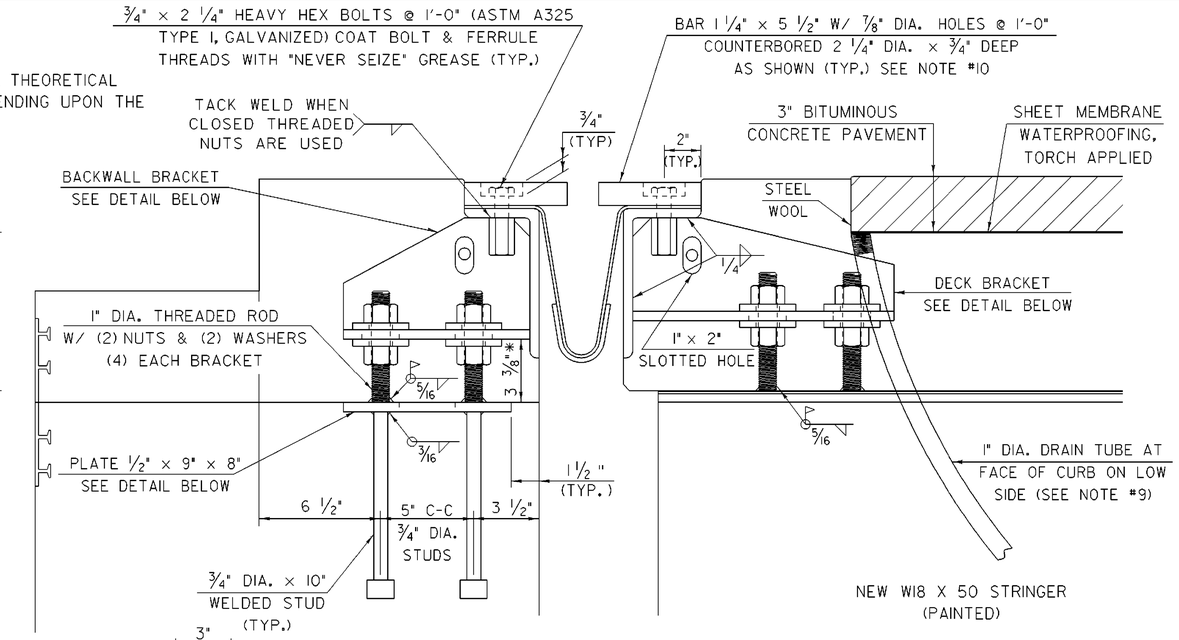

TYPICAL SECTION BETWEEN BRACKETS

SCALE: 3" = 1'- 0" (NORMAL TO ℄ BEARING)

TYPICAL SECTION AT BRACKETS

SCALE: 3" = 1'- 0" (NORMAL TO ℄ BEARING)

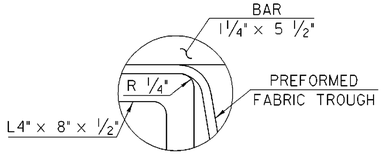

DETAIL "A"

NOT TO SCALE

BACKWALL BRACKET PLAN

SCALE: 3" = 1'- 0"

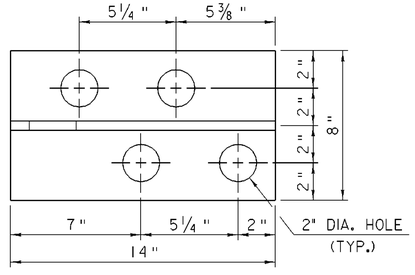

DECK BRACKET PLAN

SCALE: 3" = 1'- 0"

ALL PLATES 1/2"

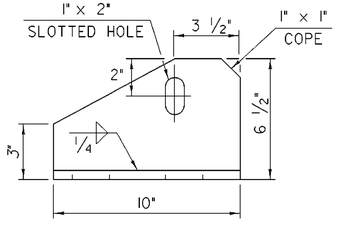

BACKWALL BRACKET ELEVATION

SCALE: 3" = 1'- 0"

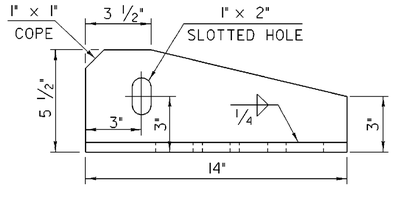

DECK BRACKET ELEVATION

SCALE: 3" = 1'- 0"

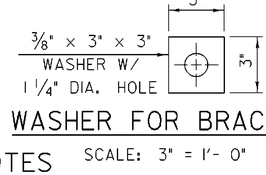

WASHER FOR BRACKET

SCALE: 3" = 1'- 0"

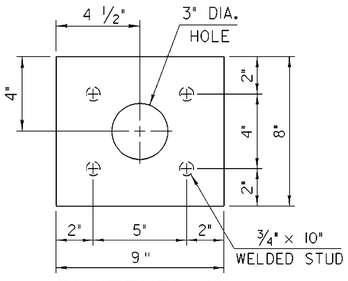

PLATE PLAN

SCALE: 3" = 1'- 0"

EXPANSION JOINT NOTES

1. DETAILS ON THIS SHEET ARE FOR ITEM 516.11 "BRIDGE EXPANSION JOINT, VERMONT".
2. PREFORMED FABRIC MATERIAL SHALL BE CONTINUOUS AND SHALL CONFORM TO SUBSECTION 707.07.
3. BUTYL RUBBER TAPE SHALL CONFORM TO SUBSECTION 707.12.
4. THE FINAL FINISH OF THE EXPANSION DEVICE SHALL BE COVERED DURING THE PLACING OF BRIDGE DECK.
5. ALL STEEL COMPONENTS SHALL BE AASHTO M 270M/M 270, GRADE 36 GALVANIZED OR METALIZED AS PER SUBSECTION 506.15 (a) OR (b) UNLESS OTHERWISE SPECIFIED.
6. THE ITEM "BRIDGE EXPANSION JOINT, VERMONT" SHALL INCLUDE THE FABRICATION AND ERECTION OF THE COMPLETE JOINT ASSEMBLY INCLUDING ALL STEEL PLATES, BRACKETS, ANGLES, WELDED STUDS OR RODS, PREFORMED FABRIC DRAIN TROUGH MATERIAL AND PLASTIC DRAIN TUBES, BUTYL RUBBER TAPE AND ANY OTHER MISCELLANEOUS MATERIAL NECESSARY TO INSTALL JOINT.
7. THE 4" X 8" X 1/2" ANGLES SHALL BE FURNISHED AS ONE CONTINUOUS PIECE. THE 1 1/4" X 5 1/2" BARS EACH SIDE OF THE JOINT SHALL BE PROVIDED IN TWO EQUAL LENGTHS.
8. COAT CONCRETE CONTACT SURFACES WITH EPOXY BONDING COMPOUND MEETING THE REQUIREMENTS OF SUBSECTION 719.02. PAYMENT SHALL BE INCLUDED IN THE UNIT PRICE BID FOR ITEM 516.11 "BRIDGE EXPANSION JOINT, VERMONT".
9. A 1" DIAMETER PLASTIC DRAIN TUBE SHALL BE INSTALLED AS SHOWN AT THE FACE OF CURB. THE UPPER END IS TO BE PLUGGED WITH STEEL WOOL AND THE LOWER END IS TO EXTEND BELOW THE BOTTOM OF THE FLOOR BEAM. THE DRAIN TUBES SHALL BE FASTENED TO THE FLOOR BEAM USING A METHOD APPROVED BY THE ENGINEER.
10. FILL COUNTERBORED HOLES WITH HOT POURED JOINT SEALER AFTER BOLT INSTALLATION. PAYMENT FOR THE WORK SHALL BE INCIDENTAL TO ITEM 516.11.
11. PAYMENT FOR WATERSTOP SHALL BE INCIDENTAL TO "CONCRETE, HIGH PERFORMANCE CLASS A". SEE SHEET 36 FOR WATERSTOP DETAILS.
12. A 1/4" DRIP BEAD OF PREFORMED MATERIAL SHALL BE CEMENTED TO THE BOTTOM OF THE FABRIC TROUGH USING AN ADHESIVE APPROVED BY THE MANUFACTURER. THE DRIP BEAD SHALL BE APPLIED 1" FROM THE EDGE OF THE CUT HOLE IN THE TROUGH.
13. FABRIC TROUGH SHALL BE THOROUGHLY CLEANED AND FLUSHED AFTER PAVING OPERATION.
14. THE EXPANSION JOINT SHALL BE SHOP ASSEMBLED AND SHIPPED AS ONE UNIT.
15. ALL BOLTS, STUDS AND RELATED HARDWARE EXCEPT AS NOTED SHALL CONFORM TO SUBSECTION 714.04 AND SHALL BE GALVANIZED IN ACCORDANCE WITH SUBSECTION 516.02

EXPANSION JOINT DETAILS

PROJECT NAME: SPRINGFIELD
PROJECT NUMBER: BHO 1442(30)

FILE NAME: 96J348/str/s96J348sup.dgn
PROJECT MANAGER: R.R. WHITCOMB
DESIGNED BY: J. PERRIGO
s96J348ejd.1

PLOT DATE: 27-DEC-2007
DRAWN BY: D. PETERSON
CHECKED BY: C. CARLSON

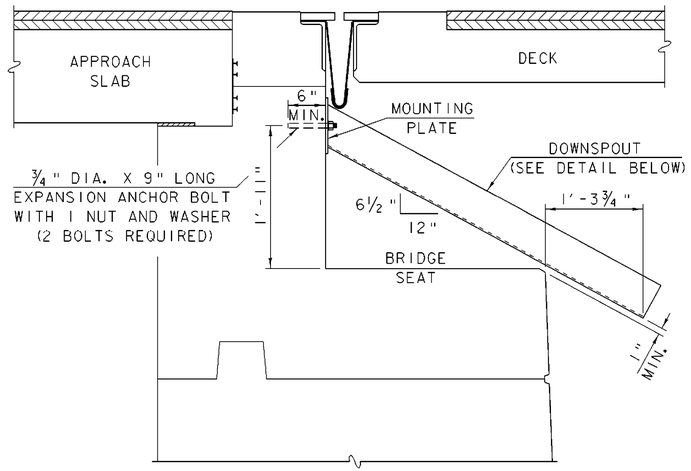

DOWNSPOUT ELEVATION

SCALE: 1" = 1'-0"

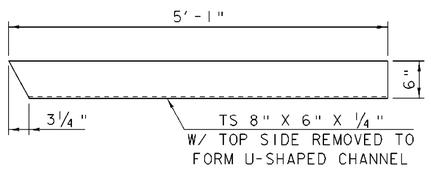

DOWNSPOUT DETAIL

SCALE: 1" = 1'-0"

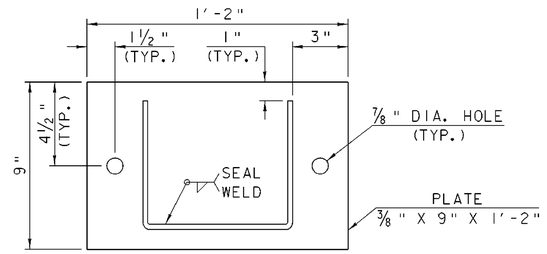

MOUNTING PLATE DETAIL

SCALE: 3" = 1'-0"

DOWNSPOUT NOTES

1. HOLLOW STRUCTURAL STEEL TUBING SHALL CONFORM TO SUBSECTION 714.11.
2. ALL PLATES, BARS, AND ANGLES SHALL CONFORM TO SUBSECTION 714.02.
3. DOWNSPOUT SHALL BE GALVANIZED IN ACCORDANCE WITH SUBSECTION 506.15(a) AFTER FABRICATION.
4. ALL BOLTS AND RELATED HARDWARE SHALL CONFORM TO SUBSECTION 714.04 AND SHALL BE GALVANIZED IN ACCORDANCE WITH SUBSECTION 516.02.
5. AREAS WHERE THE GALVANIZING HAS BEEN REMOVED FROM THE DOWNSPOUT EITHER BY CUTTING, BURNING, WELDING, PLACING, OR ANY OTHER MEANS SHALL BE REPAIRED IN CONFORMANCE WITH SUBSECTION 513.06(f).
6. THE DOWNSPOUT, MOUNTING PLATE AND ALL ANCHOR BOLTS WITH RELATED HARDWARE SHALL BE PAID FOR UNDER ITEM 506.60, "STRUCTURAL STEEL".

DOWNSPOUT DETAILS

PROJECT NAME: SPRINGFIELD
PROJECT NUMBER: BHO 1442(30)

FILE NAME: 96j348/str/s96j348sup.dgn
PROJECT MANAGER: R. R. WHITCOMB
DESIGNED BY: J. PERRIGO
s96j348dsd.i

PLOT DATE: 27-DEC-2007
DRAWN BY: G. ROY
CHECKED BY: C. CARLSON
SHEET 35 OF 85

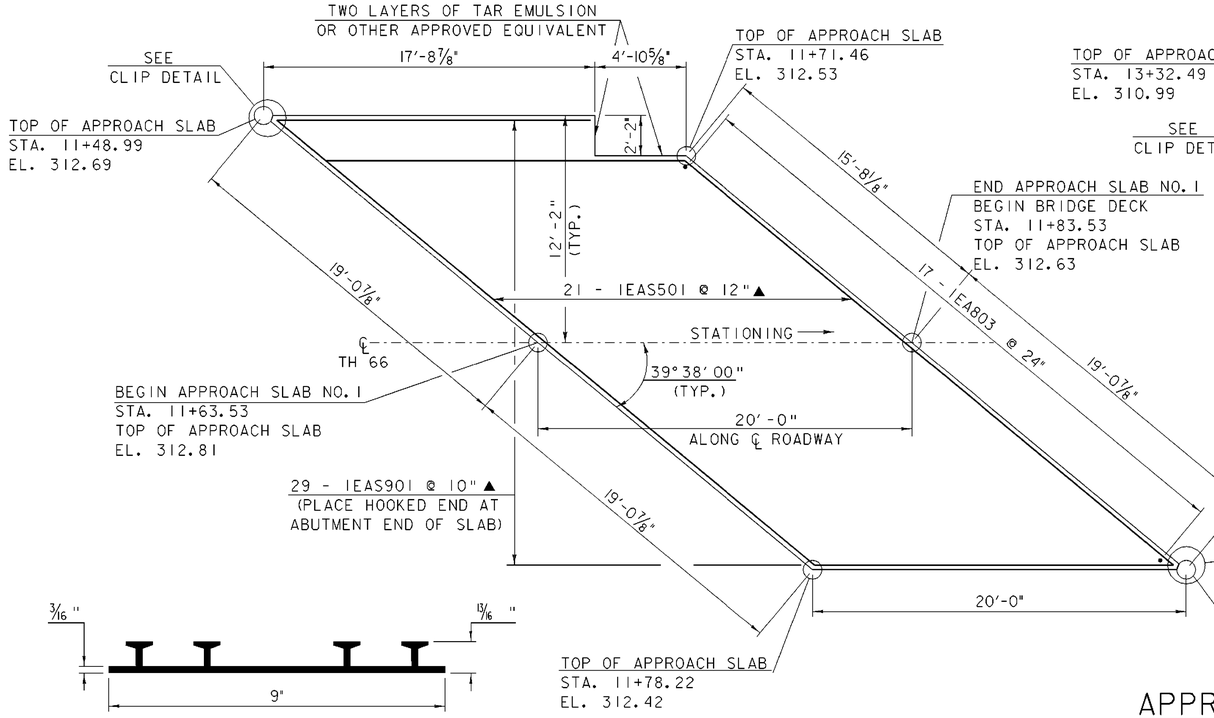

PVC WATERSTOP DETAIL

THE COSTS FOR PVC WATERSTOP SHALL BE INCLUDED IN THE UNIT BID PRICE FOR ITEM 501.33, "CONCRETE, HIGH PERFORMANCE CLASS A". OTHER CONFIGURATIONS MAY BE USED UPON APPROVAL OF THE STRUCTURES ENGINEER.

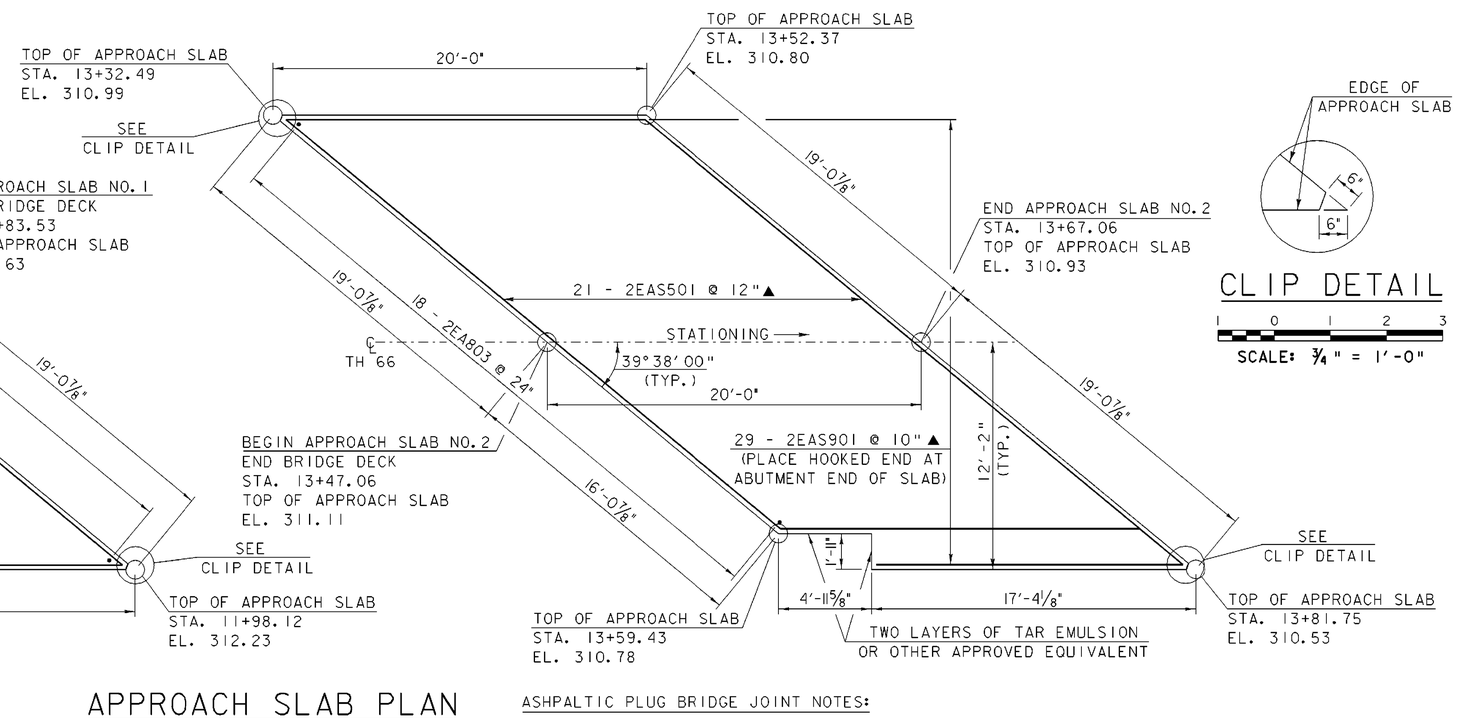

CLIP DETAIL

SCALE: 3/4" = 1'-0"

APPROACH SLAB PLAN

SCALE: 1/4" = 1'-0"

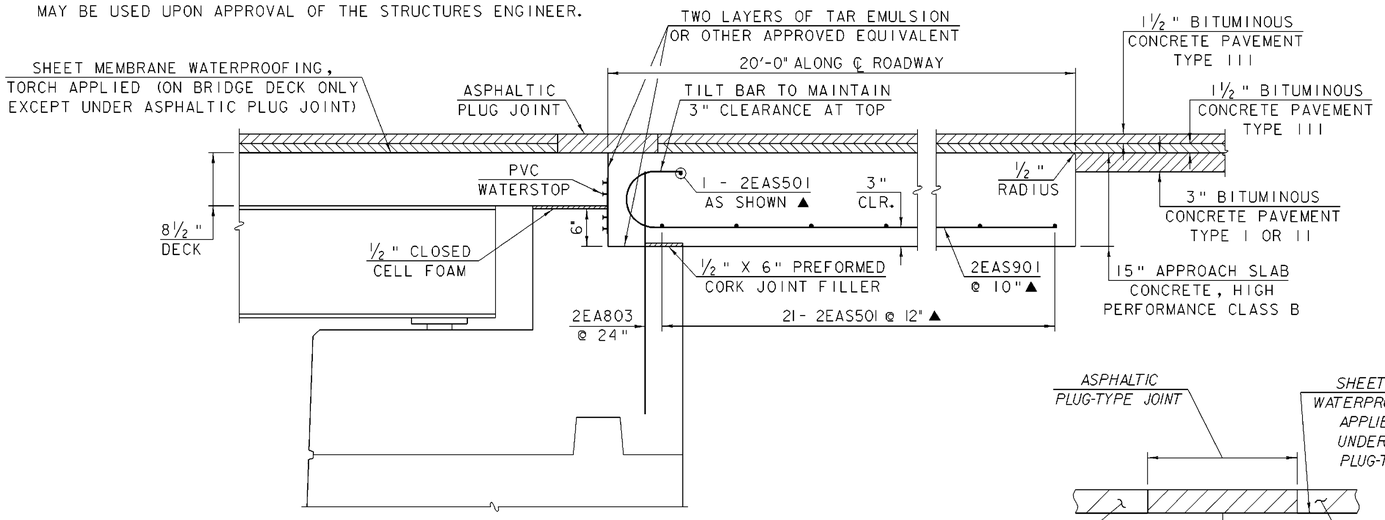

APPROACH SLAB NO. 2 DETAIL

SCALE: 1" = 1'-0"

(APPROACH NO. 1 SIMILAR EXCEPT NO ASPHALTIC PLUG JOINT)

ASPHALTIC PLUG-TYPE JOINT DETAIL

NTS

ASHPALTIC PLUG BRIDGE JOINT NOTES:

1. INSTALLATION
   - A. THE JOINT SHALL BE LOCATED CENTRALLY OVER THE DECK AND FIXED JOINT MARKED OUT TO THE MANUFACTURER'S RECOMMENDED WIDTH.
   - B. THE JOINT SHALL BE EXCAVATED AS SHOWN ON THE PLANS BY USE OF SAWS AND PNEUMATIC HAMMER OR A HAMMER AND CHISEL.
   - C. THE JOINT AREA SHALL BE BLAST CLEANED OF DEBRIS AND ASPHALT. THE JOINT AREA SHALL BE THOROUGHLY DRIED USING HOT COMPRESSED AIR PRIOR TO APPLYING BINDER MATERIAL.
   - D. SPALLED AND DEFECTIVE CONCRETE SHALL BE REPAIRED WITH AN APPROVED MATERIAL AS AGREED UPON BY THE ENGINEER.
   - E. THE BINDER MATERIAL SHALL BE HEATED AND PLACED AS RECOMMENDED BY THE MANUFACTURER.
   - F. THE BINDER MATERIAL AND AGGREGATE SHALL BE HEATED AND MIXED AS RECOMMENDED BY THE MANUFACTURER.
   - G. THE INSTALLATION OF MATERIAL, COMPACTION, AND TOP COATING SHALL BE AS RECOMMENDED BY THE MANUFACTURER.
   - H. IMMEDIATELY AFTER TOP COATING, AN ANTI-SKID MATERIAL SHALL BE CAST OVER THE JOINT TO REDUCE THE RISK OF TRACKING.
   - I. JOINT SHALL BE PROTECTED FROM TRAFFIC UNTIL THE MATERIAL HAS COOLED TO 125 DEG. F +/-.

2. WEATHER LIMITATIONS. BINDER MATERIAL SHALL BE APPLIED ONLY WHEN THE FOLLOWING CONDITIONS PREVAIL:
   - A. THE AMBIENT AIR TEMPERATURE IS AT LEAST 50 DEG F AND RISING.
   - B. THE ROAD SURFACE IS SUFFICIENTLY DRY.
   - C. WEATHER CONDITIONS OR OTHER CONDITIONS ARE FAVORABLE AND ARE EXPECTED TO REMAIN SO FOR THE PERFORMANCE OF SATISFACTORY WORK.

APPROACH SLAB DETAILS

PROJECT NAME:	SPRINGFIELD
PROJECT NUMBER:	BHO 1442(30)

FILE NAME: 96J348/str/s96j348sup.dgn	PLOT DATE: 27-DEC-2007
PROJECT MANAGER: R.R. WHITCOMB	DRAWN BY: J. PERRIGO
DESIGNED BY: J. PERRIGO	CHECKED BY: C. CARLSON
s96j348asd.i	SHEET 36 OF 85

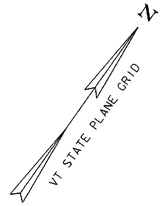

SOUTHWEST QUADRANT

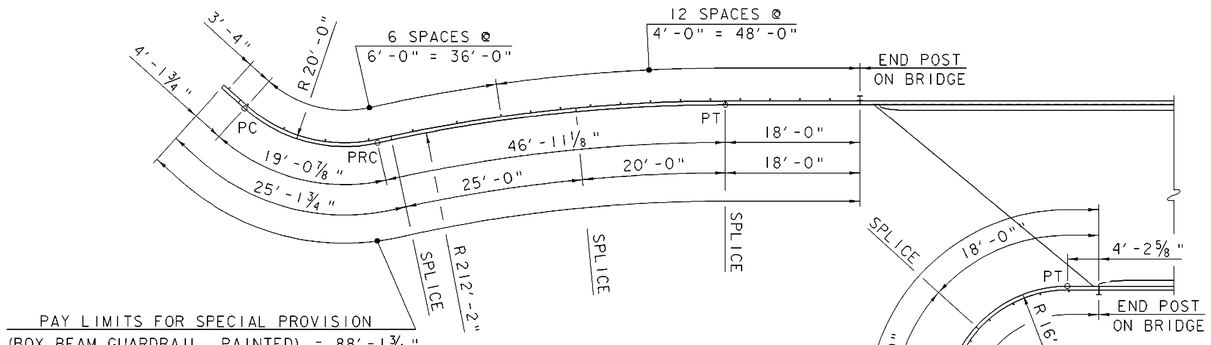

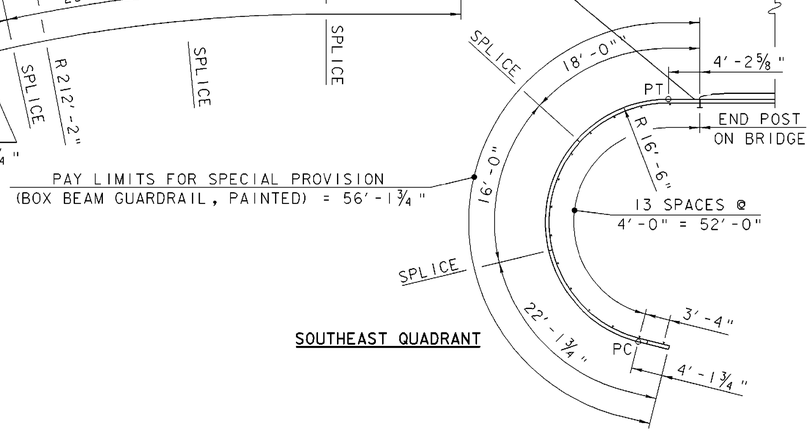

SOUTHEAST QUADRANT

NORTHWEST QUADRANT

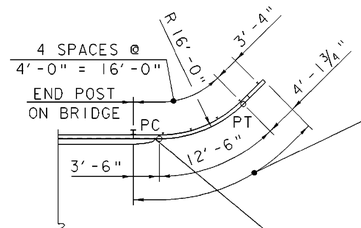

NORTHEAST QUADRANT

BOX BEAM RAIL, POSTS AND ALL APPURTENANCES SHALL BE PAINTED IN ACCORDANCE WITH SUBSECTION 513.06(f), NEW GALVANIZED SURFACES. THE COLOR SHALL MATCH THE ~~GREEN~~ FINISH COAT USED FOR THE TRUSS. PAYMENT FOR THIS WORK SHALL BE INCLUDED IN THE PRICE BID FOR ITEM 900.640, SPECIAL PROVISION (BOX BEAM GUARD RAIL, PAINTED). BLACK

SPECIAL PROVISION (BOX BEAM GUARDRAIL, PAINTED) LAYOUT

10 0 10

SCALE: 1" = 10'-0"

SPECIAL PROVISION (BOX BEAM GUARDRAIL, PAINTED) LAYOUT

PROJECT NAME: SPRINGFIELD
PROJECT NUMBER: BHO 1442(30)

FILE NAME: 96J348/str/s96J348rail.dgn
PROJECT LEADER: R. WHITCOMB
DESIGNED BY: C. CARLSON
s96j348bgl.i

PLOT DATE: 27-DEC-2007
DRAWN BY: G. ROY
CHECKED BY: C. CARLSON
SHEET 37 OF 85

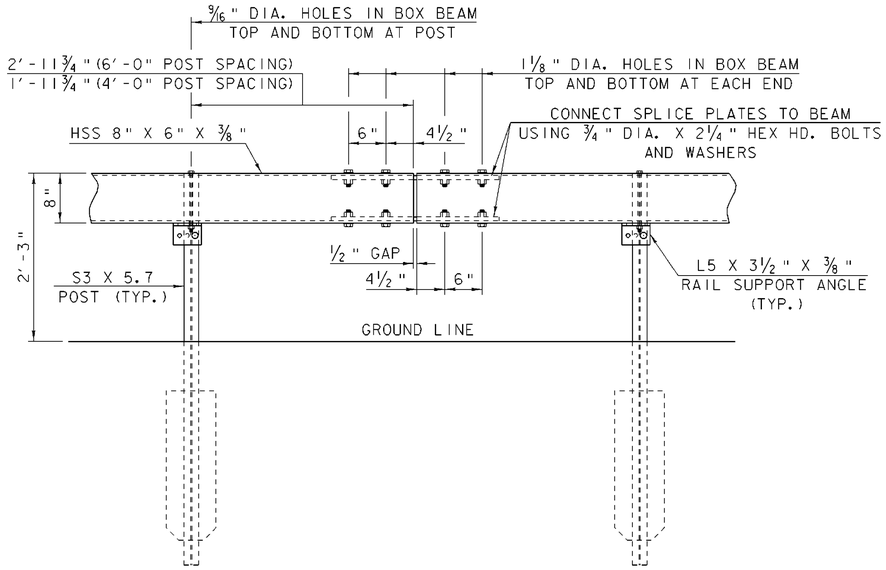

GUARD RAIL SPLICE DETAIL

SCALE: 1" = 1'-0"

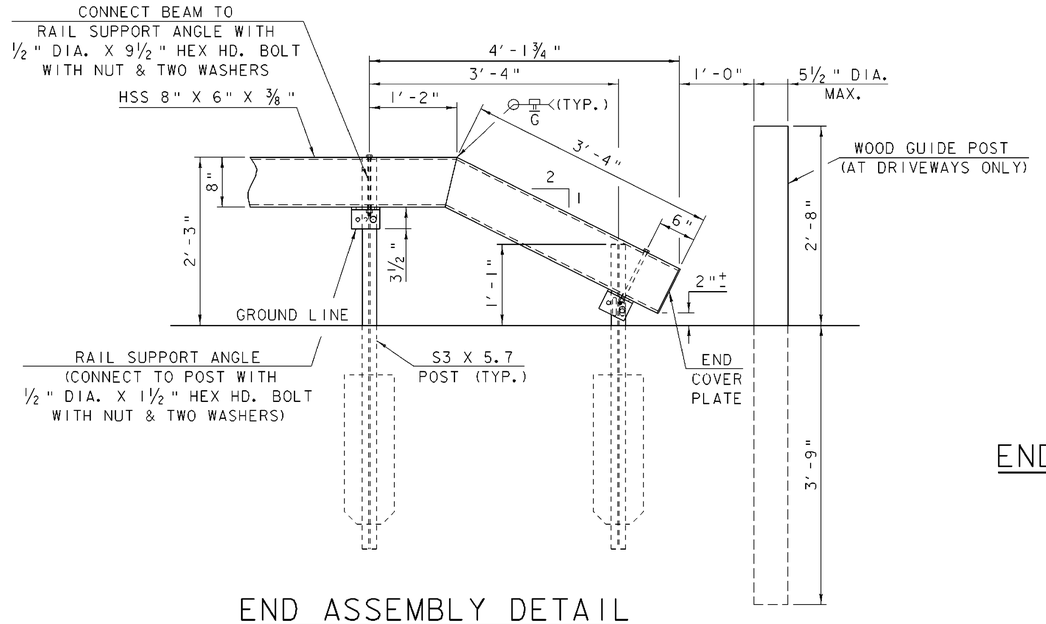

END ASSEMBLY DETAIL

SCALE: 1" = 1'-0"

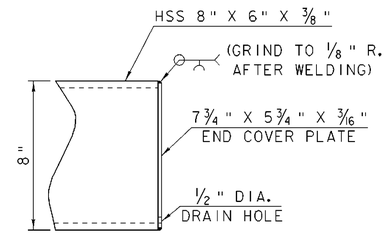

END COVER PLATE DETAIL

0.5 0.25 0 0.25 0.5

SCALE: 3" = 1'-0"

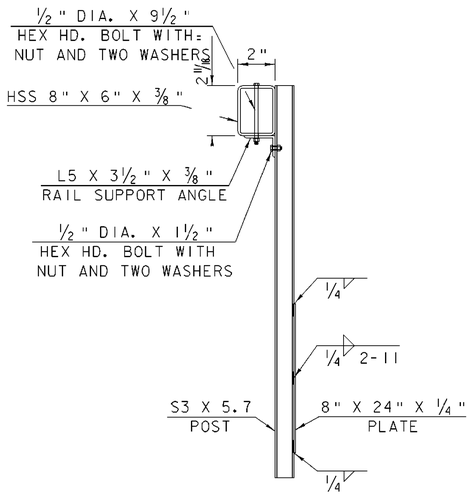

SIDE VIEW

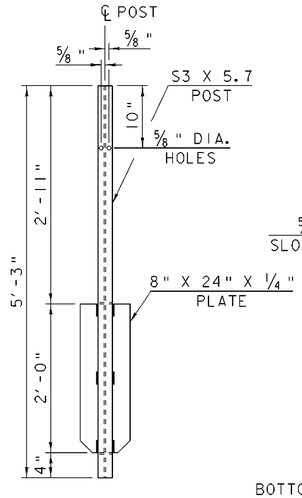

STANDARD POST

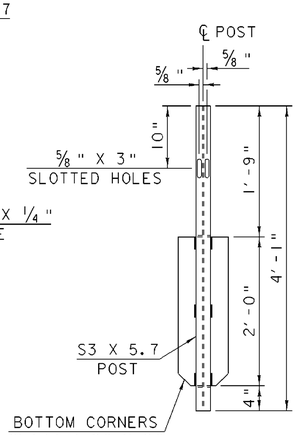

END POST

GUARD RAIL POST DETAILS

SCALE: 1" = 1'-0"

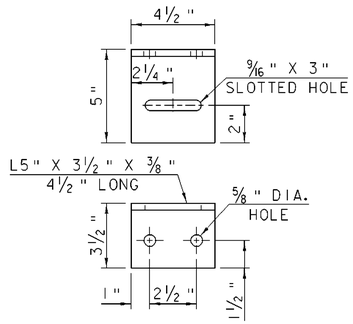

RAIL SUPPORT ANGLE

0.5 0.25 0 0.25 0.5

SCALE: 3" = 1'-0"

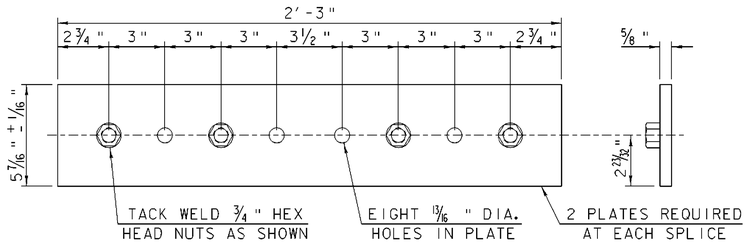

SPLICE PLATE DETAIL

0.5 0.25 0 0.25 0.5

SCALE: 3" = 1'-0"

SPECIAL PROVISION (BOX BEAM GUARDRAIL, PAINTED) DETAILS

PROJECT NAME:	SPRINGFIELD
PROJECT NUMBER:	BHO 1442(30)

FILE NAME: 96J348/str/s96J348rail.dgn	PLOT DATE: 27-DEC-2007
PROJECT LEADER: R. WHITCOMB	DRAWN BY: L. BULLOCK
DESIGNED BY: C. CARLSON	CHECKED BY: C. CARLSON
s96J348bgd.1	SHEET 37A OF 85

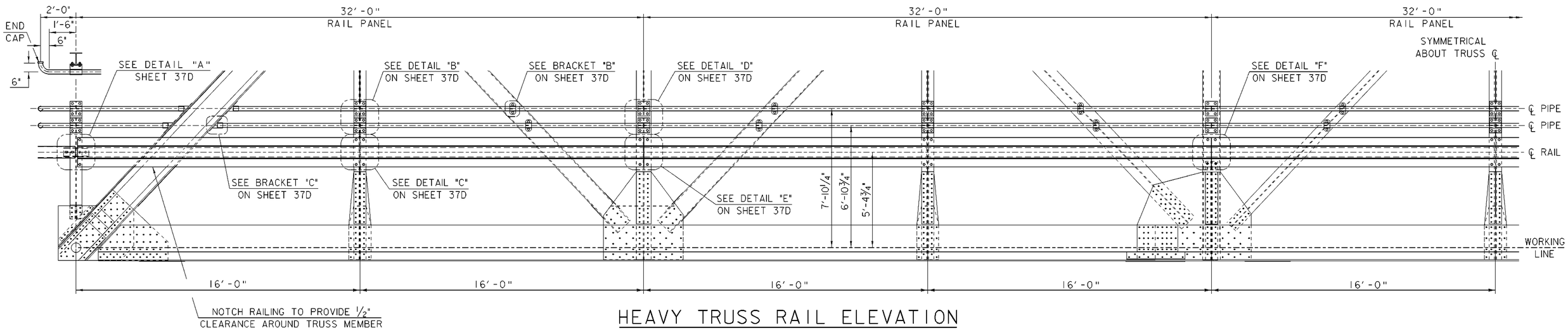

HEAVY TRUSS RAIL ELEVATION

1 0 1 2 3 4 5

SCALE: ⅜" = 1'-0"

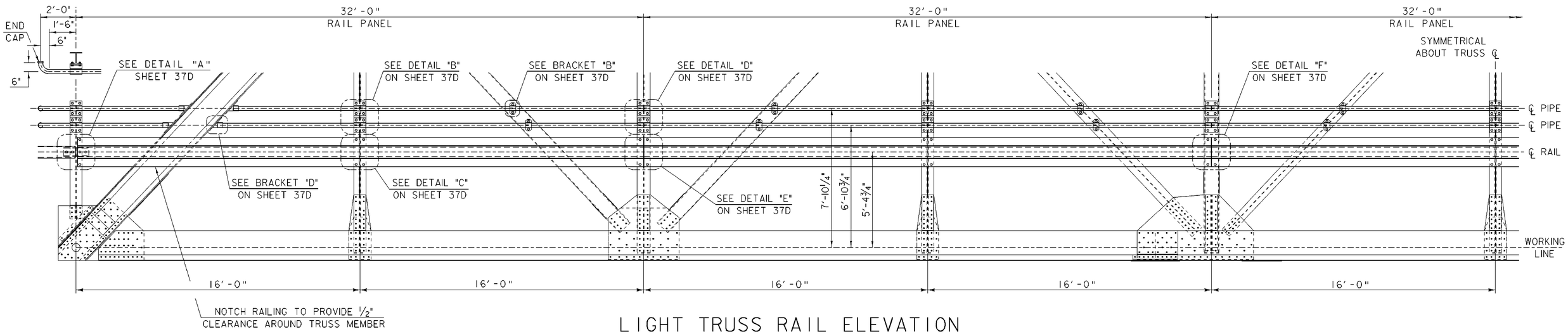

LIGHT TRUSS RAIL ELEVATION

1 0 1 2 3 4 5

SCALE: ⅜" = 1'-0"

TRUSS RAILING ELEVATION

PROJECT NAME:	SPRINGFIELD
PROJECT NUMBER:	BHO 1442(30)
FILE NAME: 96J348/str/s96J348rail.dgn	PLOT DATE: 27-DEC-2007
PROJECT LEADER: R. WHITCOMB	DRAWN BY: L. BULLOCK
DESIGNED BY: C. CARLSON	CHECKED BY: C. CARLSON
s96J348rail.i	SHEET 37B OF 85

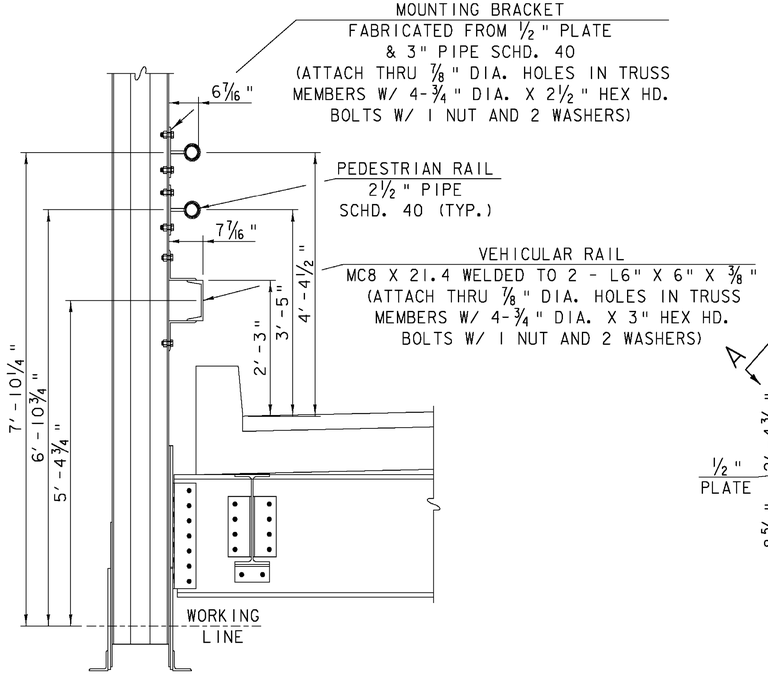

LIGHT TRUSS RAILING DETAIL

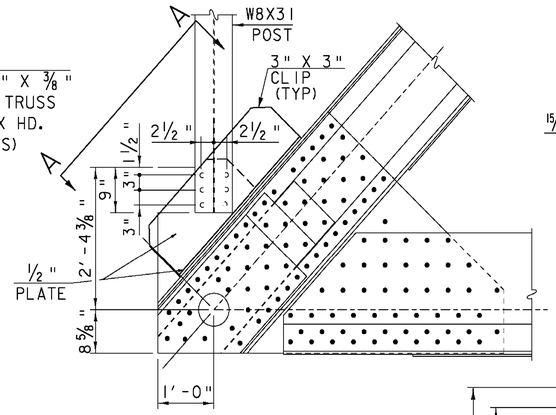

VIEW B-B

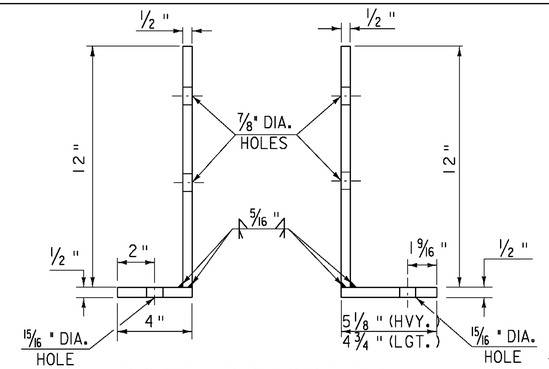

POST BRACKET/ CHORD BRACKET

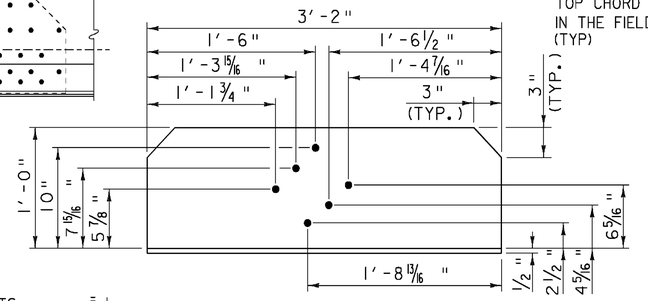

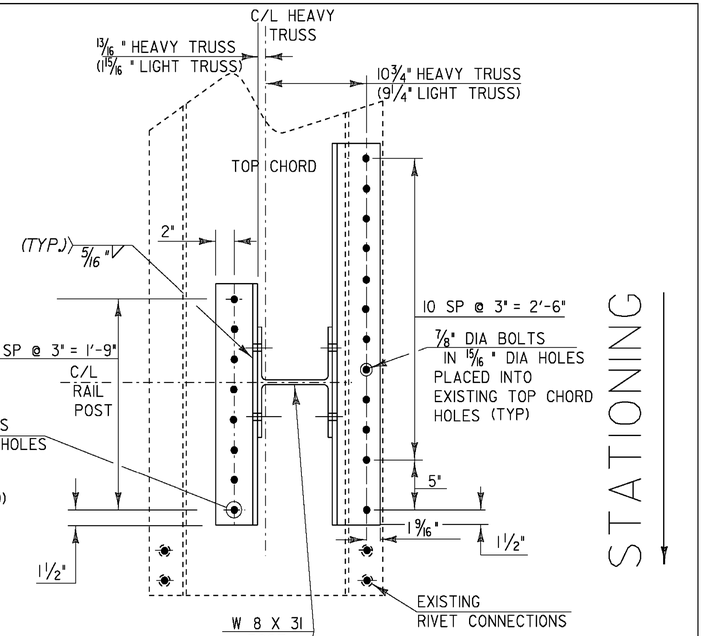

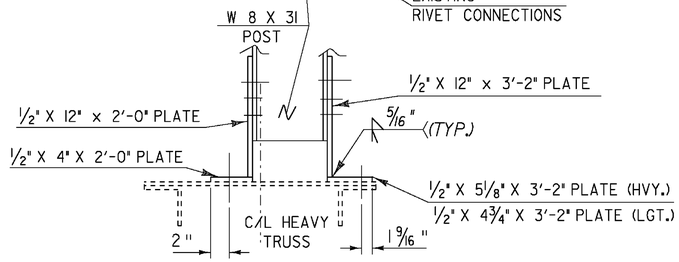

(LIGHT TRUSS MIRROR IMAGE NOTE DIMENSIONS FOR LIGHT TRUSS)

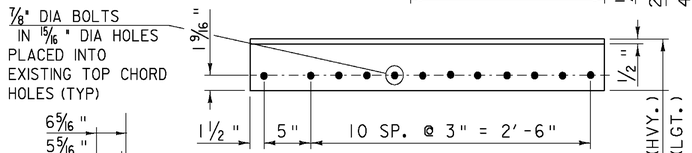

CHORD BRACKET

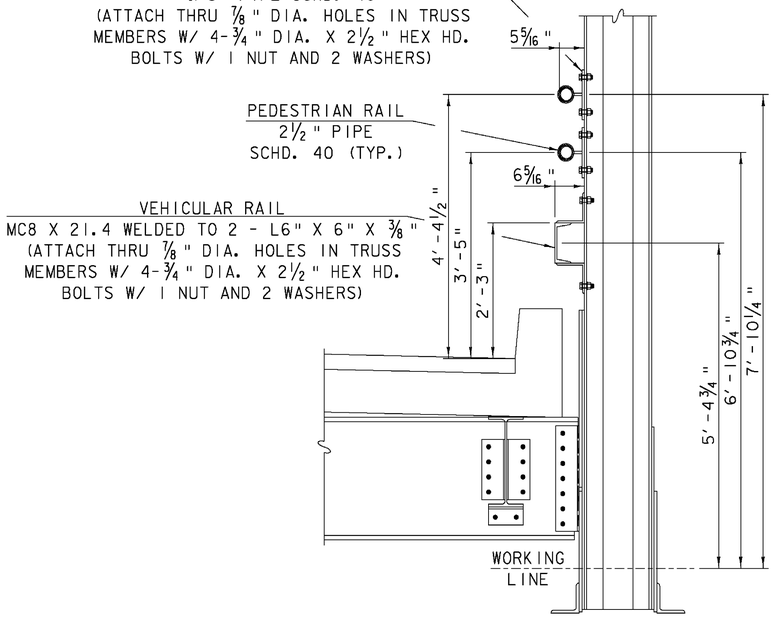

HEAVY TRUSS RAILING DETAIL

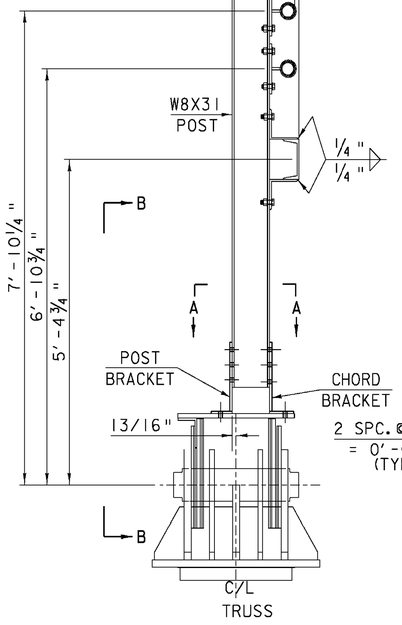

ELEVATION AT HEAVY TRUSS BEARING

(LOOKING BACK STATION)

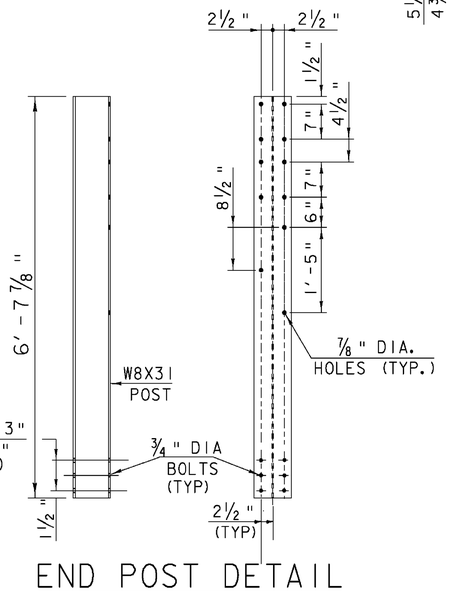

END POST DETAIL

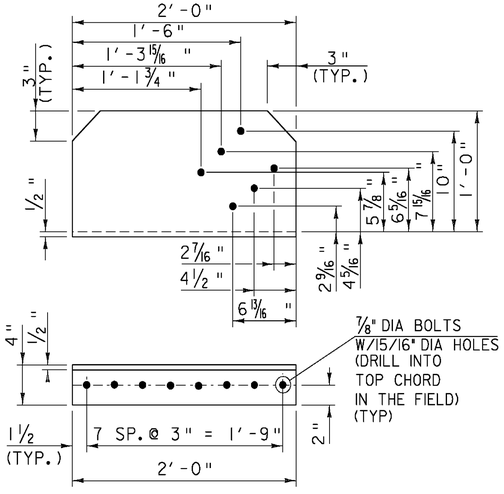

POST BRACKET

TRUSS RAILING DETAILS (1)

SCALE: 3/4 " = 1'-0"

UNLESS NOTED OTHERWISE, ALL HOLES 15/16 " DIA.

REVISION SHEET 10-27-08

PROJECT NAME:	SPRINGFIELD
PROJECT NUMBER:	BHO 1442(30)
FILE NAME: 96J348/str/s96J348rail.dgn	PLOT DATE: 30-OCT-2008
PROJECT LEADER: R. WHITCOMB	DRAWN BY: STR3
DESIGNED BY: C. CARLSON	CHECKED BY: C. CARLSON
s96J348rail2.1	SHEET 37C OF 85

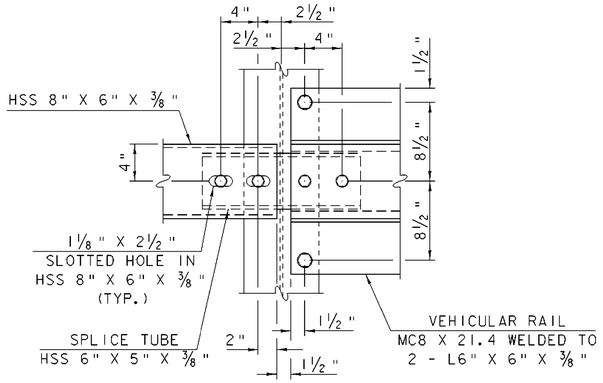

DETAIL "A"

SCALE: 1½" = 1'-0"

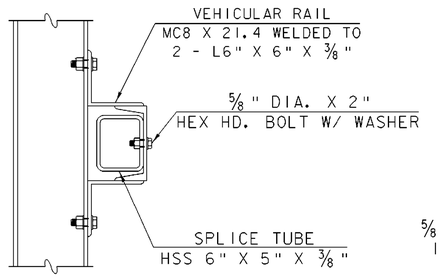

SPLICE DETAIL TO TRUSS VEHICULAR RAIL

SCALE: 1½" = 1'-0"

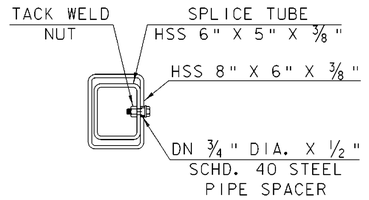

⅝" DIA. TAPPED HOLE IN SPLICE TUBE AND 1⅛" X 2½" SLOTTED HOLE IN RAIL TUBE FOR BOLT AND WASHER

SPLICE DETAIL TO BOX BEAM GUARDRAIL

SCALE: 1½" = 1'-0"

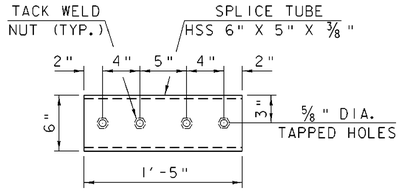

SPLICE TUBE DETAIL

SCALE: 1½" = 1'-0"

NOTES

1. TRUSS RAILING SHALL BE FURNISHED IN EQUAL LENGTH SEGMENTS NOT TO EXCEED FIVE SEGMENTS PER TRUSS LINE.
2. TRUSS VEHICULAR RAIL, PEDESTRIAN RAIL AND BRACKETS SHALL BE PAID FOR AS ITEM 506.60, "STRUCTURAL STEEL".
3. ALL RAIL COMPONENTS SHALL BE FABRICATED FROM AASHTO M 270M/M 270 GRADE 36 STRUCTURAL STEEL.
4. TRUSS RAILING SHALL BE PAINTED ~~GREEN~~ BLACK PER ITEM 513.25, "STRUCTURAL PAINTING, SHOP APPLIED."
5. MOUNTING BRACKETS SHALL BE MADE FROM 3" PIPE SCHD. 40 AND ½" PLATE.

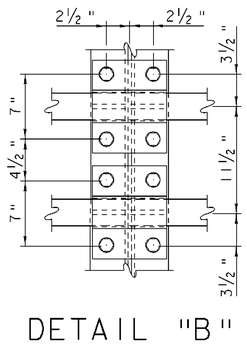

DETAIL "B"

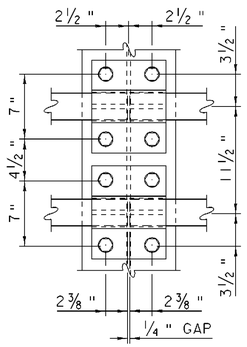

DETAIL "D"

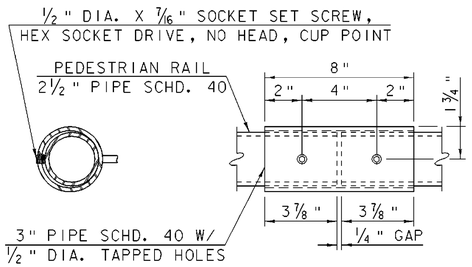

PEDESTRIAN RAIL SPLICE DETAIL

SCALE: 3" = 1'-0"

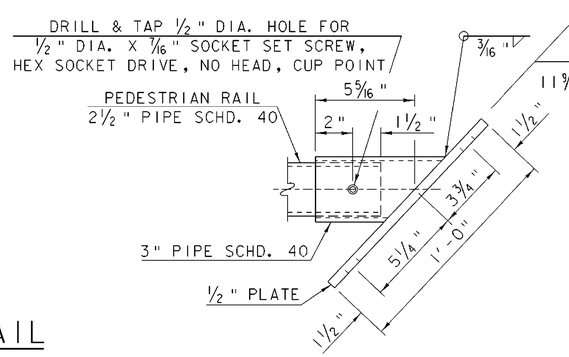

SECTION "B-B"

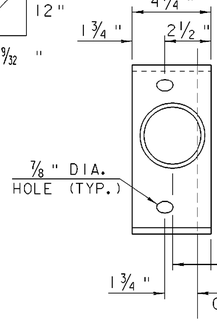

BRACKET "C"

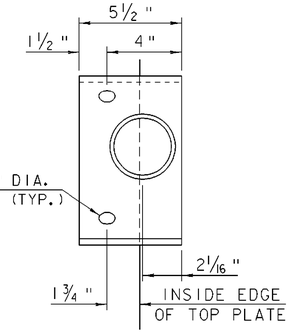

BRACKET "D"

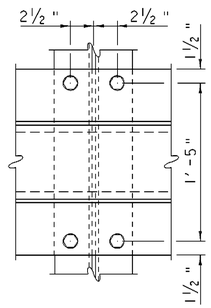

DETAIL "C"

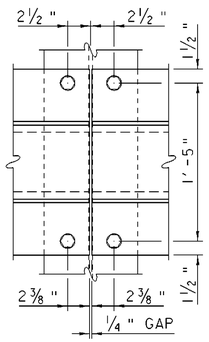

DETAIL "E"

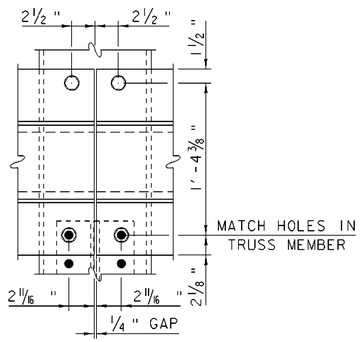

DETAIL "F"

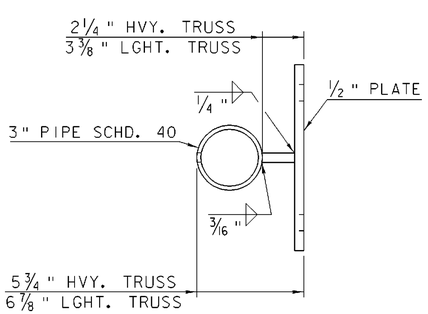

SECTION "A-A"

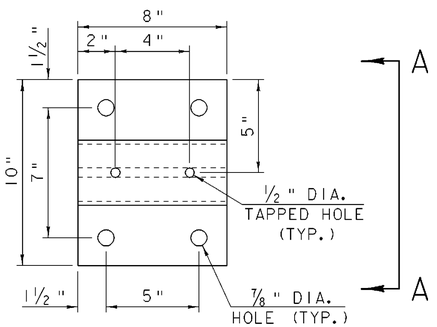

BRACKET "A"

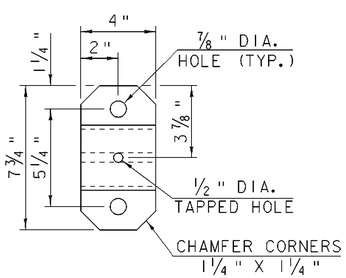

BRACKET "B"

TRUSS RAILING ATTACHMENT DETAILS

SCALE: 1½" = 1'-0"

MOUNTING BRACKET DETAILS

SCALE: 3" = 1'-0"

TRUSS RAILING DETAILS (2)

PROJECT NAME:	SPRINGFIELD
PROJECT NUMBER:	BHO 1442(30)
FILE NAME: 96J348/str/s96J348rail.dgn	PLOT DATE: 27-DEC-2007
PROJECT LEADER: R. WHITCOMB	DRAWN BY: L. BULLOCK
DESIGNED BY: C. CARLSON	CHECKED BY: C. CARLSON
s96J348rail3.i	SHEET 37D OF 85

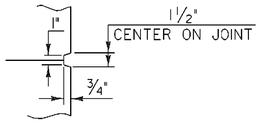

SCORE MARK DETAIL

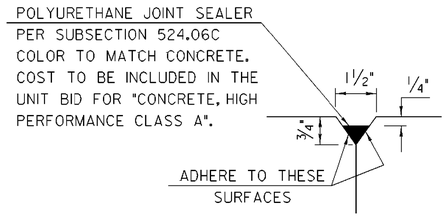

DETAIL "B"

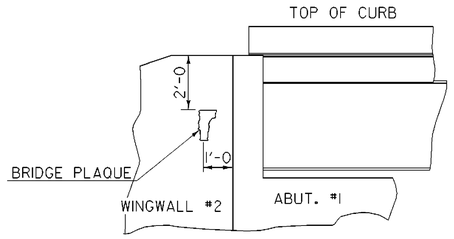

LOCATE BRIDGE PLAQUE

THE BRIDGE PLAQUE WILL BE SUPPLIED BY THE AGENCY OF TRANSPORTATION AND SHALL BE INSTALLED BY THE CONTRACTOR AT ABUTMENT #1 ON THE RIGHT SIDE AS SHOWN OR AS DIRECTED BY THE ENGINEER. THIS WORK IS INCIDENTAL TO THE ITEM "CONCRETE, HIGH PERFORMANCE CLASS B".

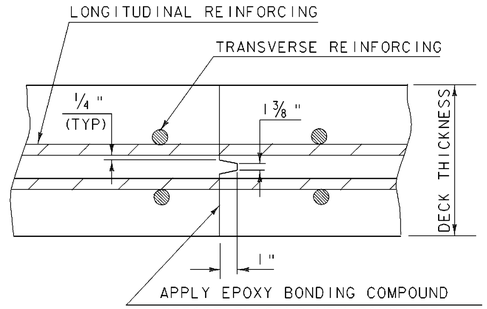

TRANSVERSE BRIDGE SLAB
CONSTRUCTION JOINT DETAILS

NTS

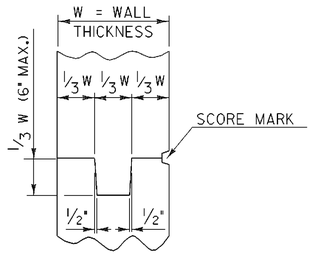

TYPICAL CONCRETE CONSTRUCTION JOINT

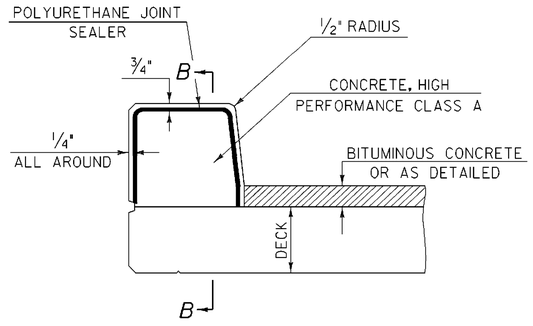

TYPICAL SECTION THROUGH
CONCRETE CURB CONSTRUCTION JOINT

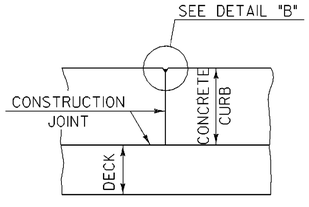

SECTION B - B

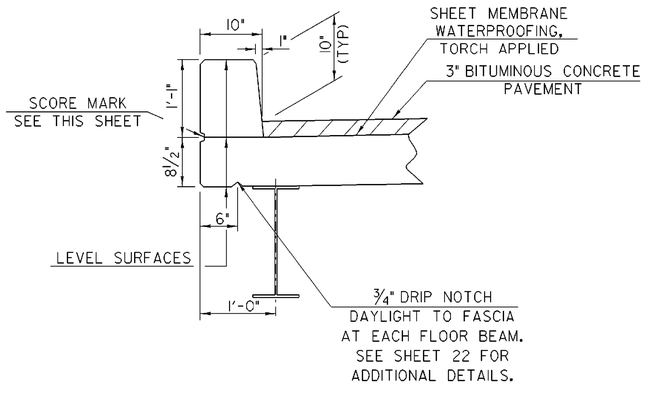

CURB SECTION

NTS

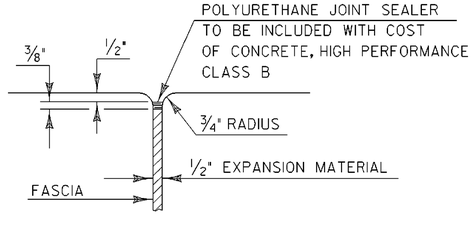

JOINT BETWEEN FASCIA
AND WINGWALL

MISCELLANEOUS PROJECT DETAILS

PROJECT NAME:	SPRINGFIELD
PROJECT NUMBER:	BHO 1442(30)

FILE NAME: 96J348/str/s96J348sup.dgn	PLOT DATE: 27-DEC-2007
PROJECT MANAGER: R.R. WHITCOMB	DRAWN BY: D. PETERSON
DESIGNED BY: J. PERRIGO	CHECKED BY: C. CARLSON
s96J348misc.i	SHEET 38 OF 85

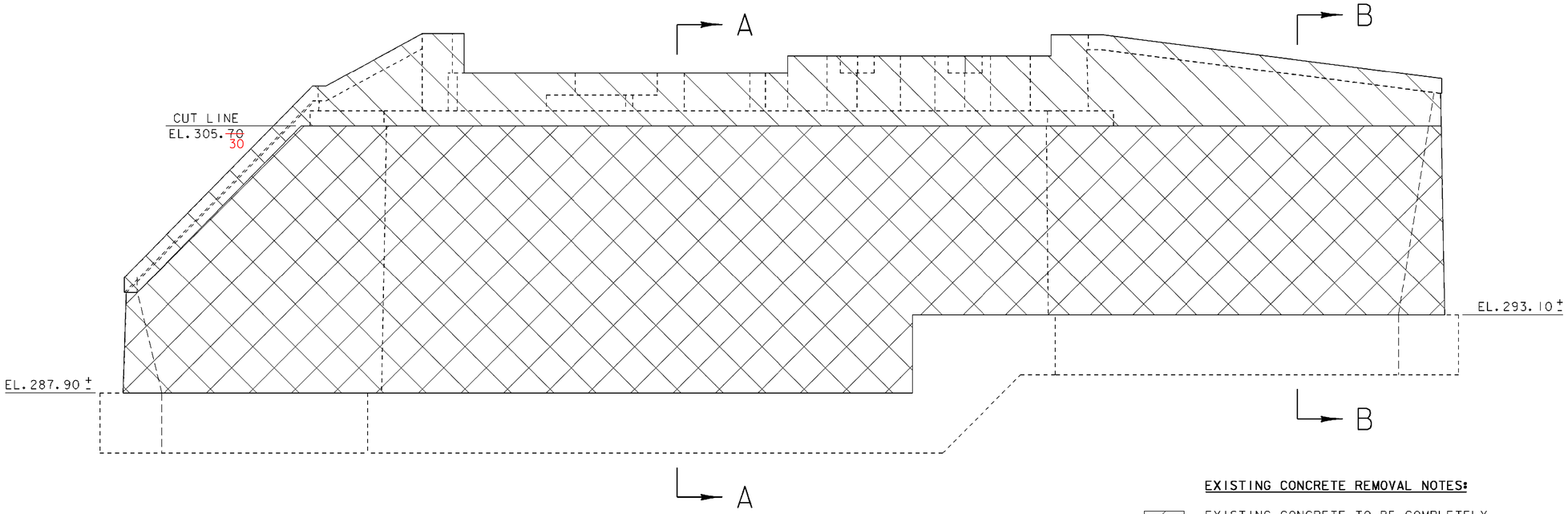

ABUTMENT NO. 1 ELEVATION

1 0 1 2 3 4 5 6

SCALE: 1/4" = 1'-0"

EXISTING CONCRETE REMOVAL NOTES:

EXISTING CONCRETE TO BE COMPLETELY REMOVED AND REPLACED WITH NEW CONCRETE AS SHOWN IN THE PLANS.

EXISTING CONCRETE TO BE PARTIALLY REMOVED AND REMAINING CONCRETE TO BE FACED WITH NEW CONCRETE AS SHOWN IN THE PLANS.

ALL CONCRETE REMOVAL AS DETAILED SHALL BE PAID FOR UNDER ITEM 529.25, "REMOVAL OF CONCRETE OR MASONRY".

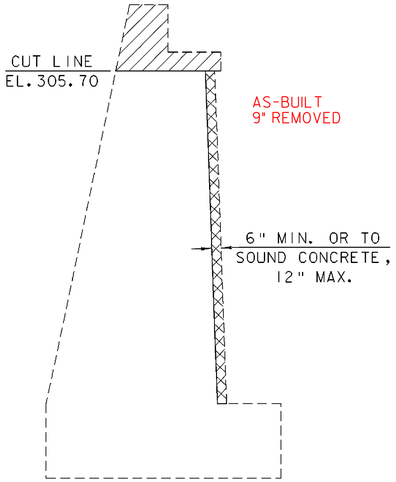

SECTION "A-A"

1 0 1 2 3 4 5 6

SCALE: 1/4" = 1'-0"

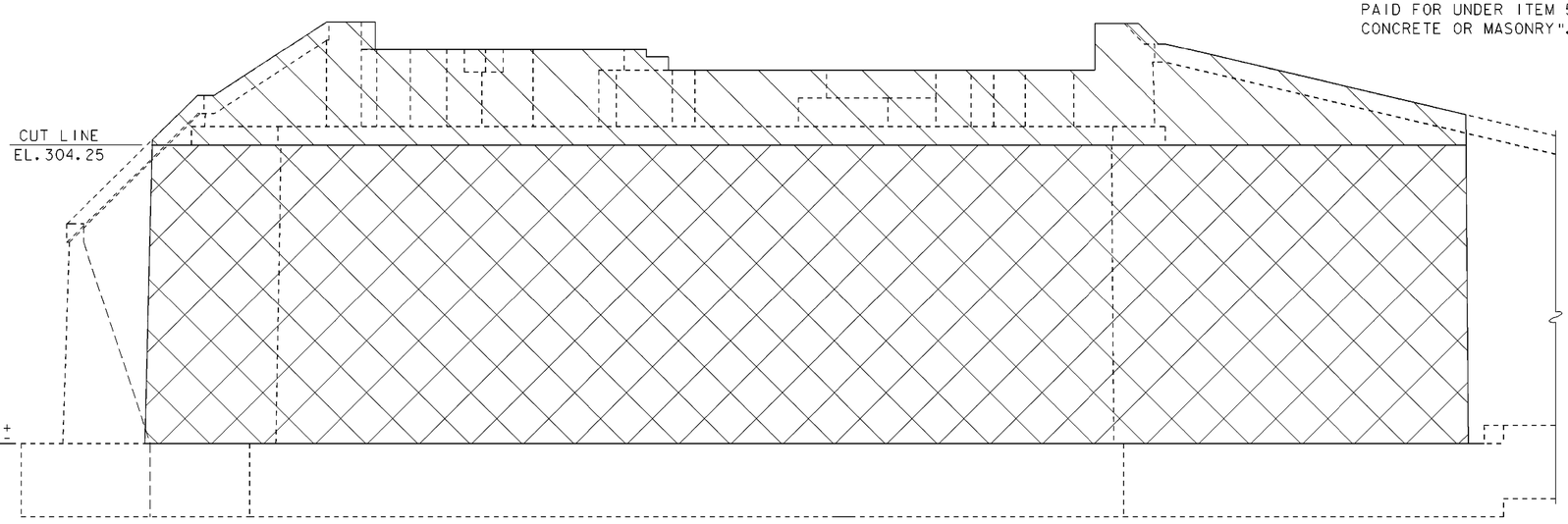

ABUTMENT NO. 2 ELEVATION

1 0 1 2 3 4 5 6

SCALE: 1/4" = 1'-0"

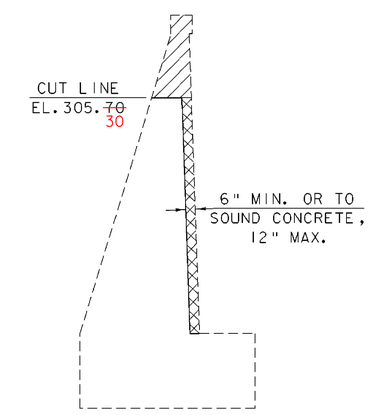

SECTION "B-B"

1 0 1 2 3 4 5 6

SCALE: 1/4" = 1'-0"

EXISTING ABUTMENT CONCRETE REMOVAL DETAILS

PROJECT NAME:	SPRINGFIELD
PROJECT NUMBER:	BHO 1442(30)

FILE NAME: 96J348/str/s96J348ab.dgn	PLOT DATE: 27-DEC-2007
PROJECT MANAGER: R. R. WHITCOMB	DRAWN BY: G. ROY
DESIGNED BY: C. CARLSON	CHECKED BY: C. CARLSON
s96J348cr.i	SHEET 39 OF 85

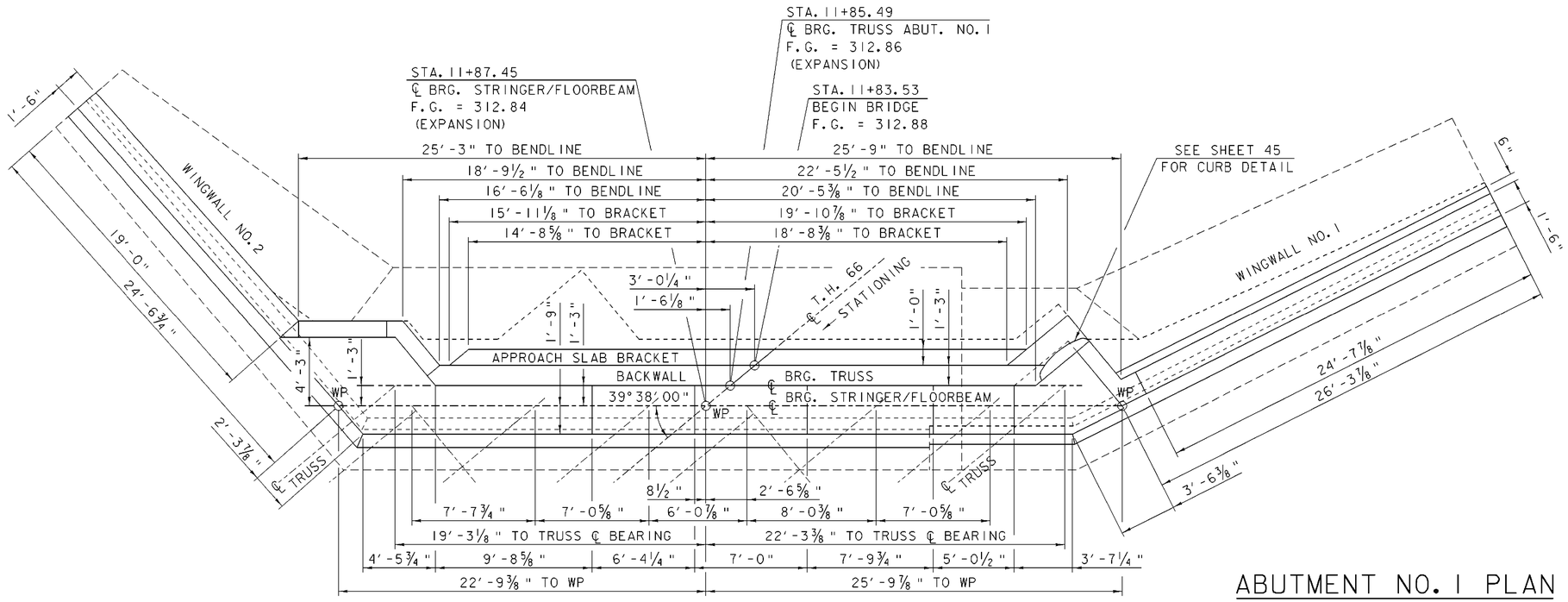

ABUTMENT NO. 1 PLAN

1 0 1 2 3 4 5 6

SCALE: ¼" = 1'-0"

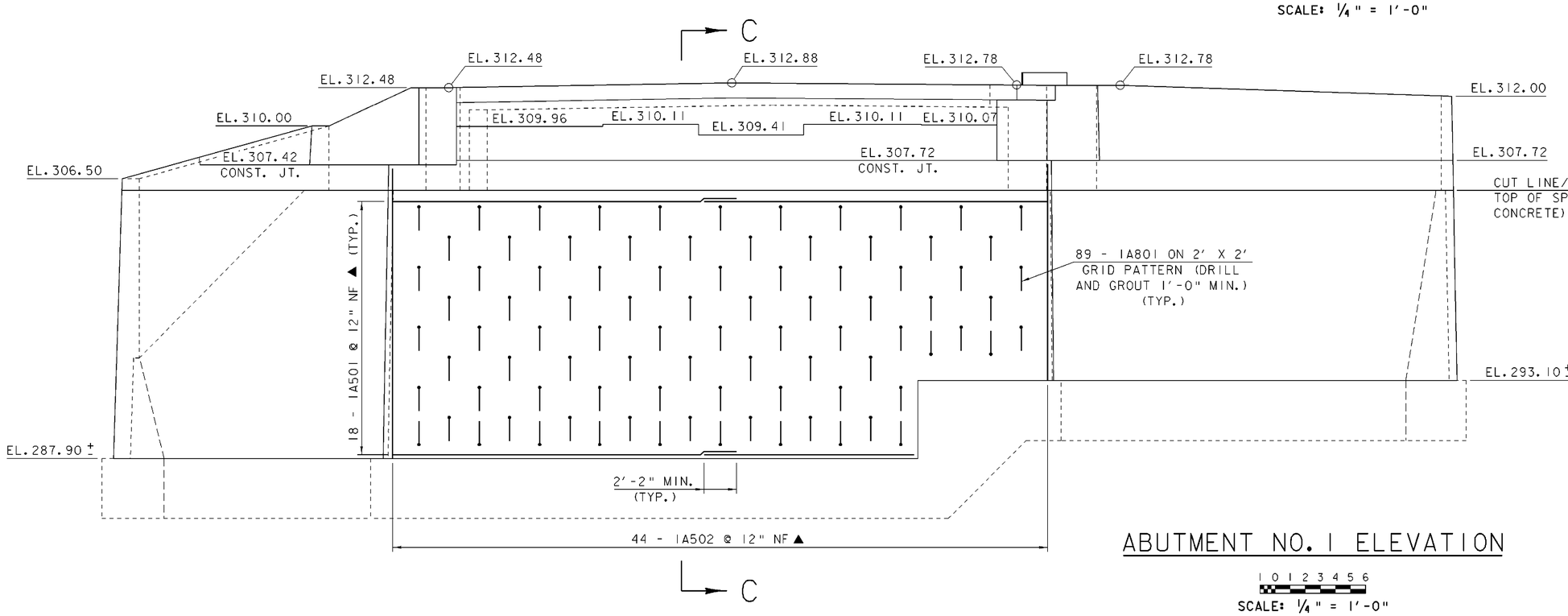

ABUTMENT NO. 1 ELEVATION

1 0 1 2 3 4 5 6

SCALE: ¼" = 1'-0"

NOTE:

NF = NEAR FACE
FF = FAR FACE
EF = EACH FACE
▲ = CUT TO FIT IN FIELD
3" CLR. UNLESS OTHERWISE NOTED
2'-2" BAR LAP UNLESS OTHERWISE NOTED

ABUTMENT NO. 1 DETAILS

PROJECT NAME: SPRINGFIELD
PROJECT NUMBER: BHO 1442(30)

FILE NAME: 96J348/str/s96J348ab.dgn
PROJECT MANAGER: R. R. WHITCOMB
DESIGNED BY: C. CARLSON
s96J348ab1.i

PLOT DATE: 27-DEC-2007
DRAWN BY: G. ROY
CHECKED BY: C. CARLSON

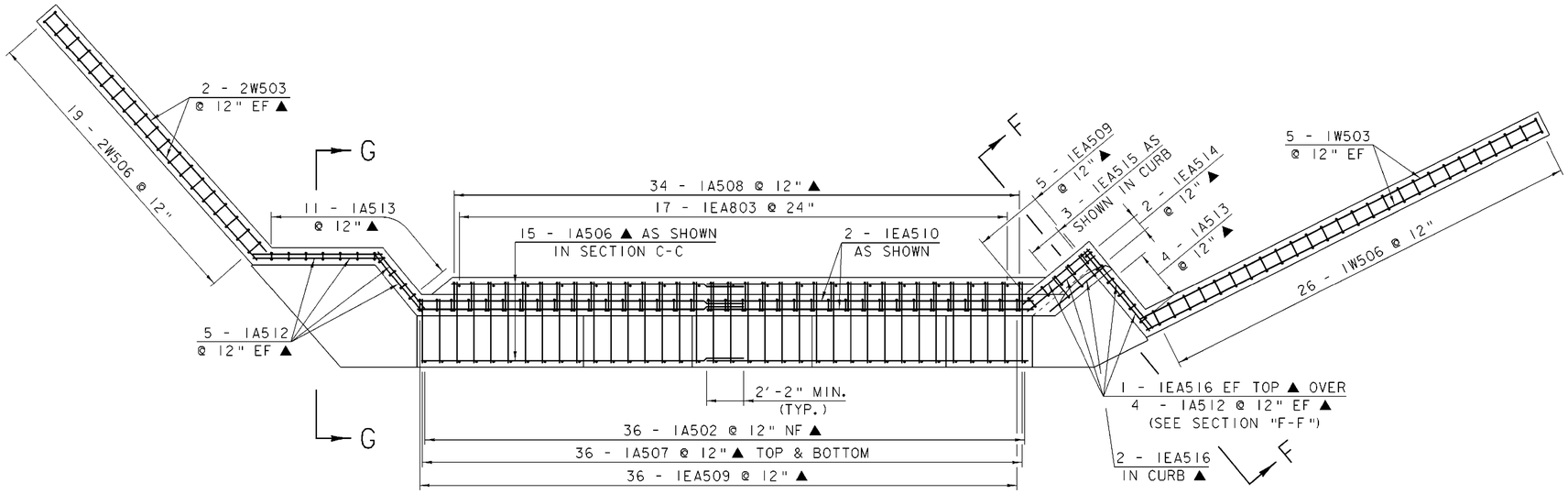

ABUTMENT NO. 1 SECOND POUR REINFORCING PLAN

SCALE: 1/4" = 1'-0"

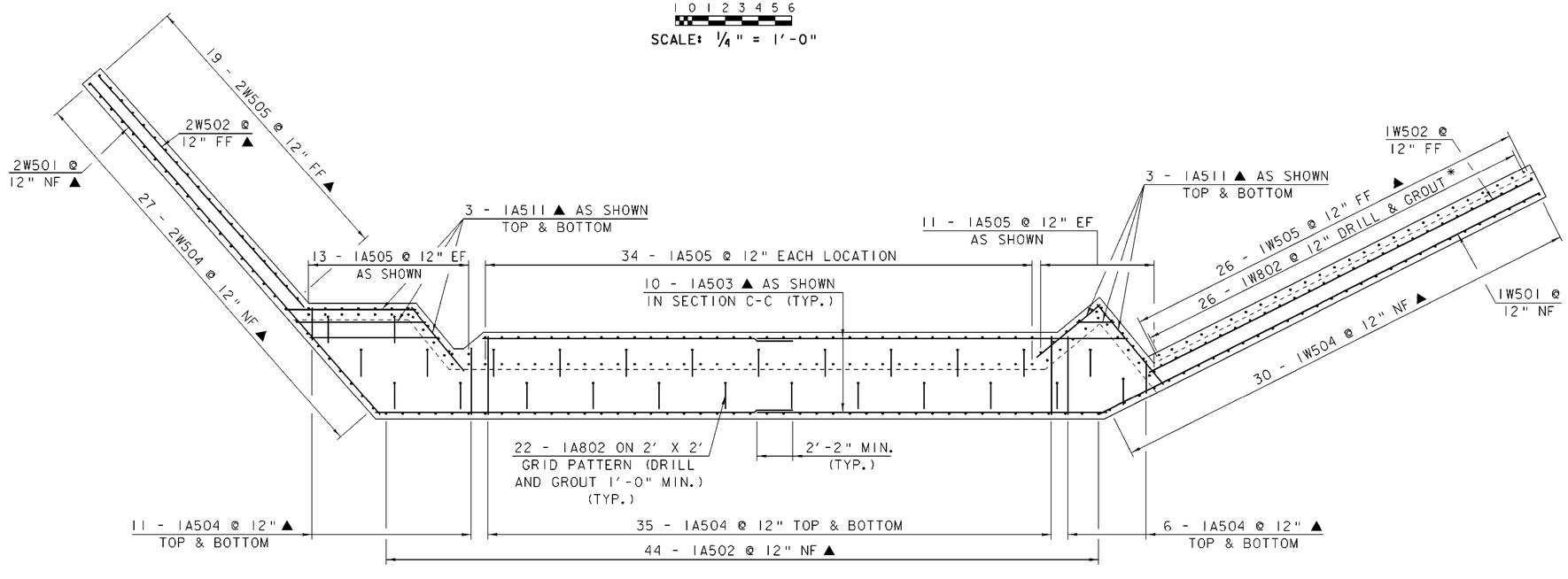

ABUTMENT NO. 1 FIRST POUR REINFORCING PLAN

SCALE: 1/4" = 1'-0"

NOTE:

NF = NEAR FACE
FF = FAR FACE
EF = EACH FACE
▲ = CUT TO FIT IN FIELD
3" CLR. UNLESS OTHERWISE NOTED
2'-2" BAR LAP UNLESS OTHERWISE NOTED

SEE SHEET 44 FOR ABUTMENT SECTIONS G-G AND F-F.

* DRILL AND GROUT DOWELS A MINIMUM OF 2'-0 INTO EXISTING WINGWALL

ABUTMENT NO. 1 STEM REINFORCING DETAILS

PROJECT NAME:	SPRINGFIELD
PROJECT NUMBER:	BHO 1442(30)

FILE NAME: 96J348/str/s96J348ab.dgn		PLOT DATE: 27-DEC-2007	
PROJECT MANAGER: R. R. WHITCOMB		DRAWN BY: G. ROY	
DESIGNED BY:	C. CARLSON	CHECKED BY: C. CARLSON	
s96J348abls.i		SHEET 41 OF 85	

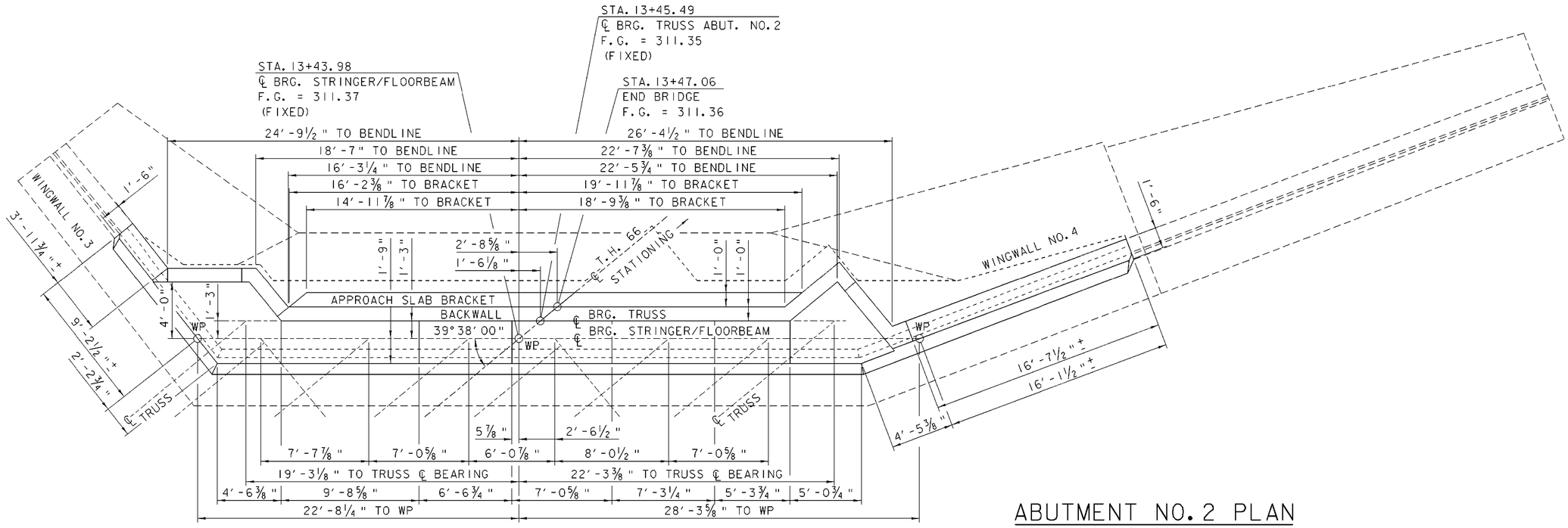

ABUTMENT NO. 2 PLAN

1 0 1 2 3 4 5 6

SCALE: ¼" = 1'-0"

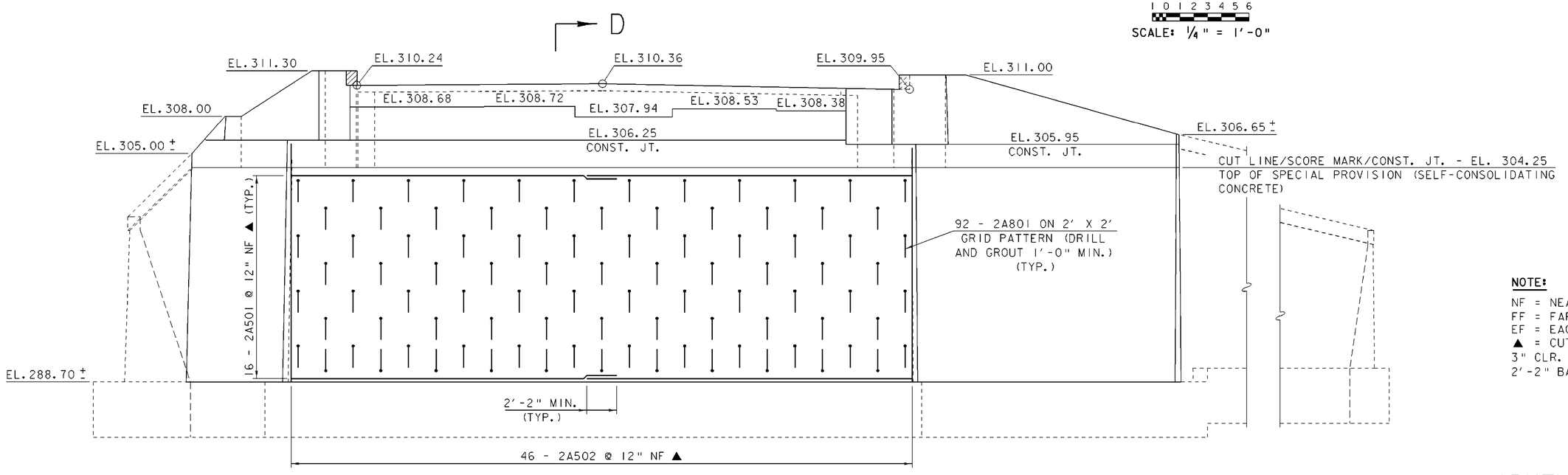

ABUTMENT NO. 2 ELEVATION

1 0 1 2 3 4 5 6

SCALE: ¼" = 1'-0"

NOTE:

NF = NEAR FACE
FF = FAR FACE
EF = EACH FACE
▲ = CUT TO FIT IN FIELD
3" CLR. UNLESS OTHERWISE NOTED
2'-2" BAR LAP UNLESS OTHERWISE NOTED

ABUTMENT NO. 2 DETAILS

PROJECT NAME: SPRINGFIELD
PROJECT NUMBER: BHO 1442(30)

FILE NAME: 96J348/str/s96J348ab.dgn
PROJECT MANAGER: R. R. WHITCOMB
DESIGNED BY: C. CARLSON
s96J348ab2.i

PLOT DATE: 27-DEC-2007
DRAWN BY: G. ROY
CHECKED BY: C. CARLSON
SHEET 42 OF 85

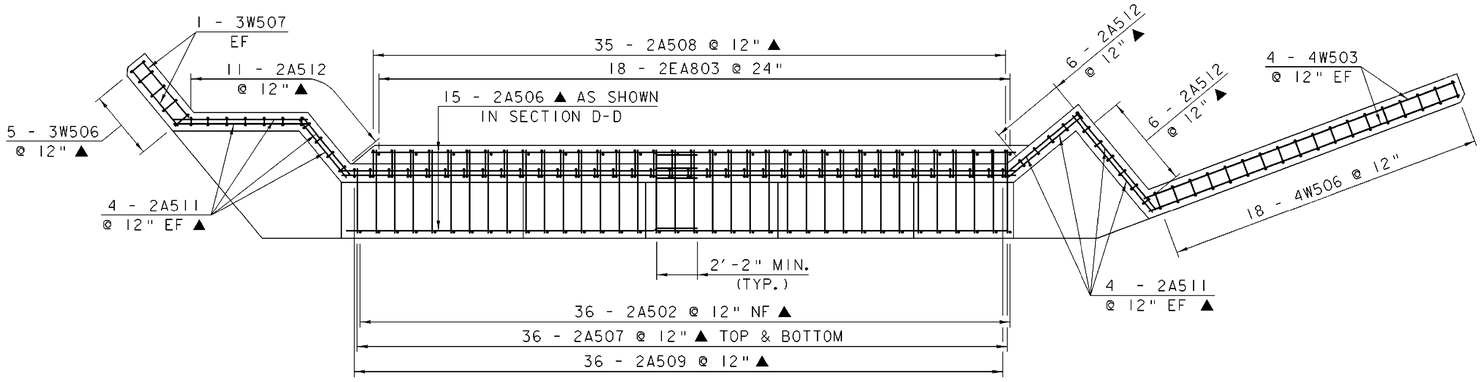

ABUTMENT NO. 2 SECOND POUR REINFORCING PLAN

1 0 1 2 3 4 5 6

SCALE: 1/4" = 1'-0"

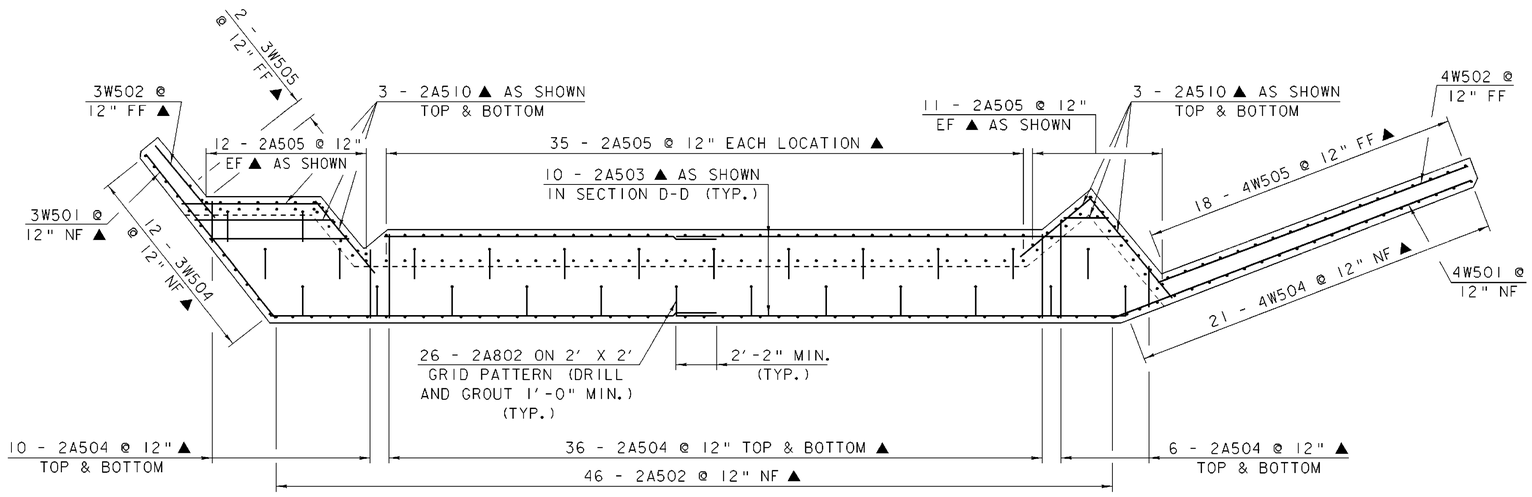

ABUTMENT NO. 2 FIRST POUR REINFORCING PLAN

1 0 1 2 3 4 5 6

SCALE: 1/4" = 1'-0"

NOTE:

NF = NEAR FACE
FF = FAR FACE
EF = EACH FACE
▲ = CUT TO FIT IN FIELD
3" CLR. UNLESS OTHERWISE NOTED
2'-2" BAR LAP UNLESS OTHERWISE NOTED

ABUTMENT NO. 2
STEM REINFORCING DETAILS

PROJECT NAME:	SPRINGFIELD
PROJECT NUMBER:	BHO 1442(30)

FILE NAME: 96J348/str/s96J348ab.dgn		PLOT DATE: 27-DEC-2007	
PROJECT MANAGER: R. R. WHITCOMB		DRAWN BY: G. ROY	
DESIGNED BY: C. CARLSON		CHECKED BY: C. CARLSON	
s96j348ab2s.i		SHEET 43 OF 85	

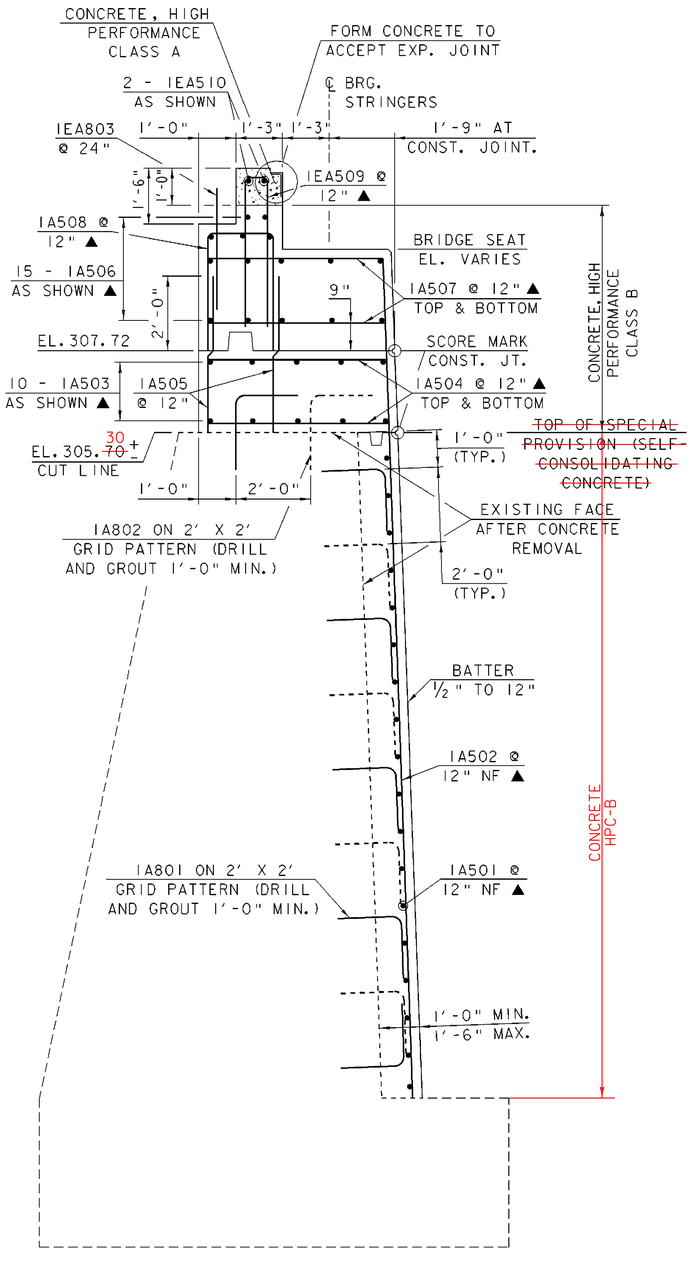

SECTION "C-C" ABUTMENT #1

SCALE: ½" = 1'-0"

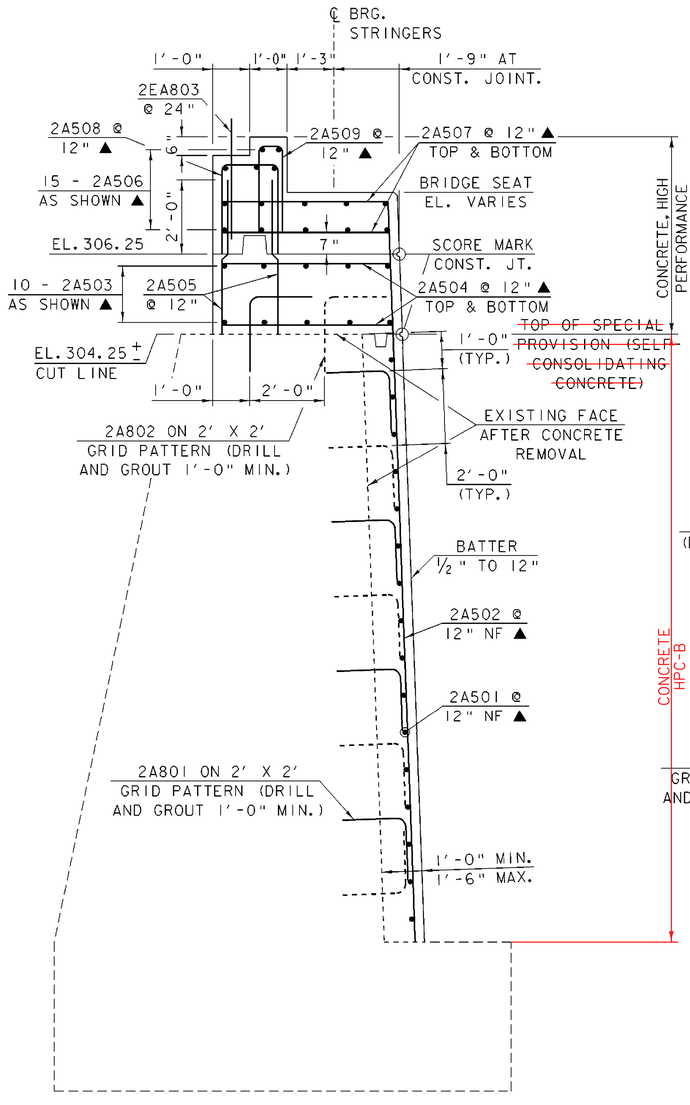

SECTION "D-D" ABUTMENT #2

SCALE: ½" = 1'-0"

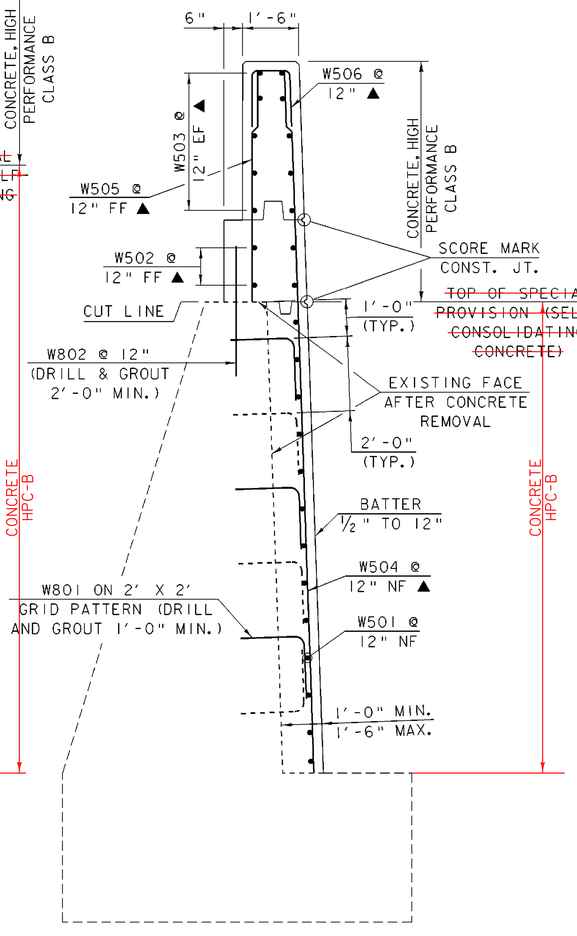

SECTION "E-E"

SCALE: ½" = 1'-0"

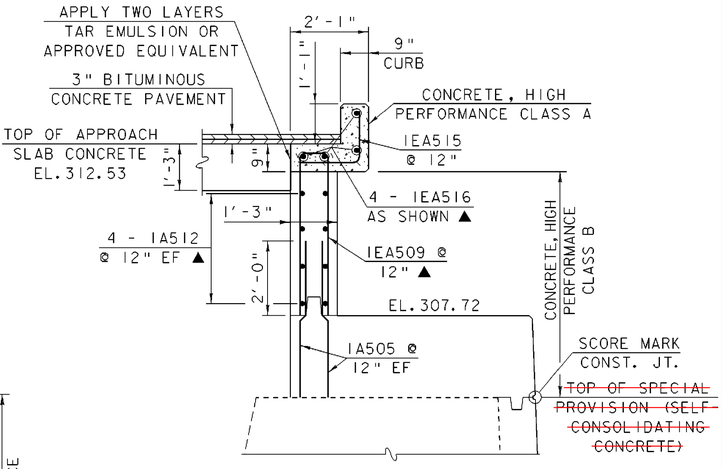

SECTION "F-F"

SCALE: ½" = 1'-0"

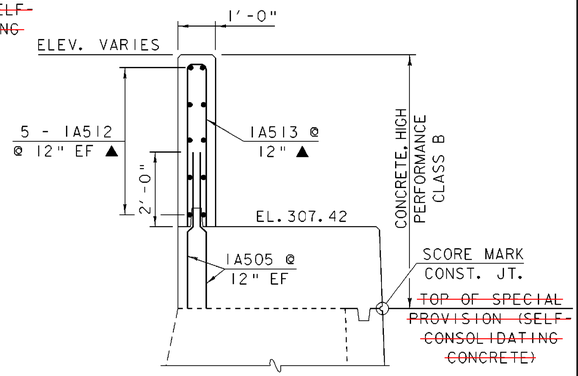

SECTION "G-G"

SCALE: ½" = 1'-0"

NOTE:

NF = NEAR FACE
FF = FAR FACE
EF = EACH FACE
▲ = CUT TO FIT IN FIELD
3" CLR. UNLESS OTHERWISE NOTED
2'-2" BAR LAP UNLESS OTHERWISE NOTED

NOTE:

TAR EMULSION OR APPROVED EQUIVALENT SHALL BE INCIDENTAL TO PAY ITEM "CONCRETE, HIGH PERFORMANCE CLASS A".

ABUTMENT SECTIONS

PROJECT NAME:	SPRINGFIELD
PROJECT NUMBER:	BHO 1442(30)

FILE NAME: 96j348/str/s96j348ab.dgn		PLOT DATE: 27-DEC-2007	
PROJECT MANAGER: R. R. WHITCOMB		DRAWN BY: G. ROY	
DESIGNED BY: C. CARLSON		CHECKED BY: C. CARLSON	
s96j348sect.i		SHEET 44 OF 85	

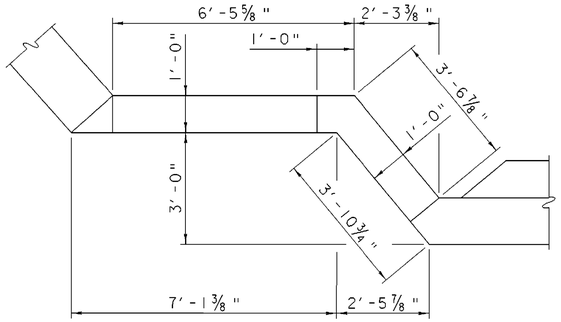

BACKWALL DETAIL @ WINGWALL NO. 2

1 0 1 2 3 4

SCALE: ½" = 1'-0"

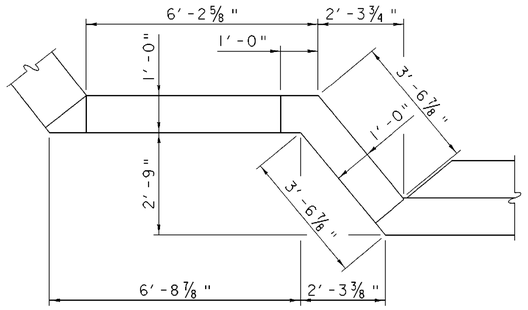

BACKWALL DETAIL @ WINGWALL NO. 3

1 0 1 2 3 4

SCALE: ½" = 1'-0"

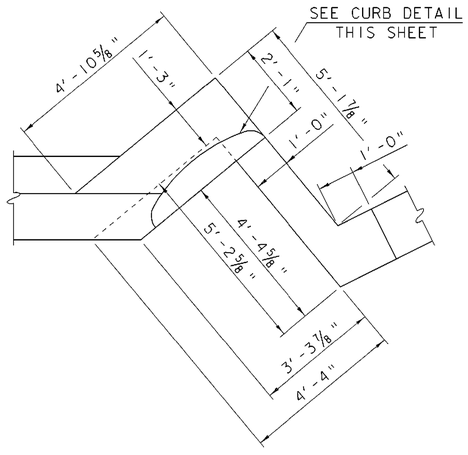

BACKWALL DETAIL @ WINGWALL NO. 1

1 0 1 2 3 4

SCALE: ½" = 1'-0"

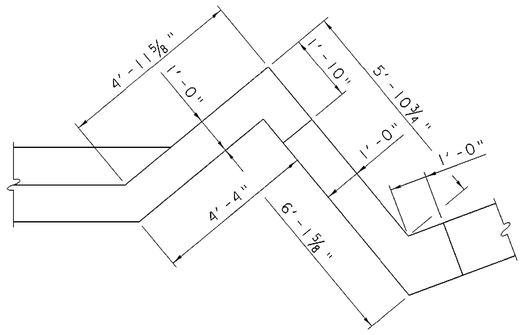

BACKWALL DETAIL @ WINGWALL NO. 4

1 0 1 2 3 4

SCALE: ½" = 1'-0"

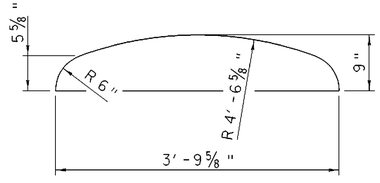

CURB DETAIL

1 0 1 2

SCALE: 1" = 1'-0"

ABUTMENT BACKWALL DETAILS

PROJECT NAME:	SPRINGFIELD
PROJECT NUMBER:	BHO 1442(30)

FILE NAME: 96j348/str/s96j348ab.dgn	PLOT DATE: 27-DEC-2007
PROJECT MANAGER: R. R. WHITCOMB	DRAWN BY: G. ROY
DESIGNED BY: C. CARLSON	CHECKED BY: C. CARLSON
s96j348bw.1	SHEET 45 OF 85

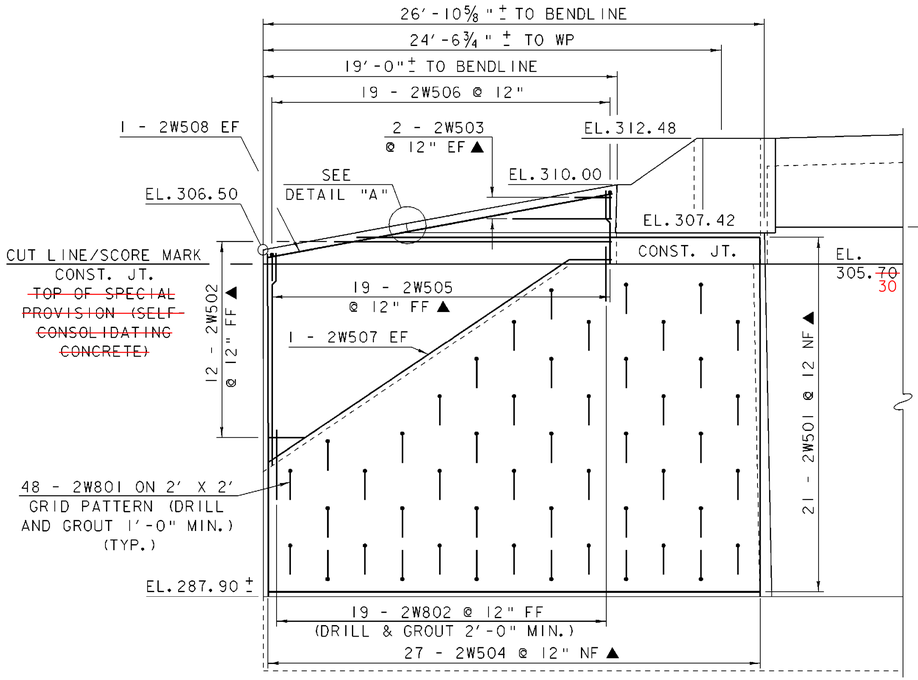

WINGWALL NO. 2 ELEVATION

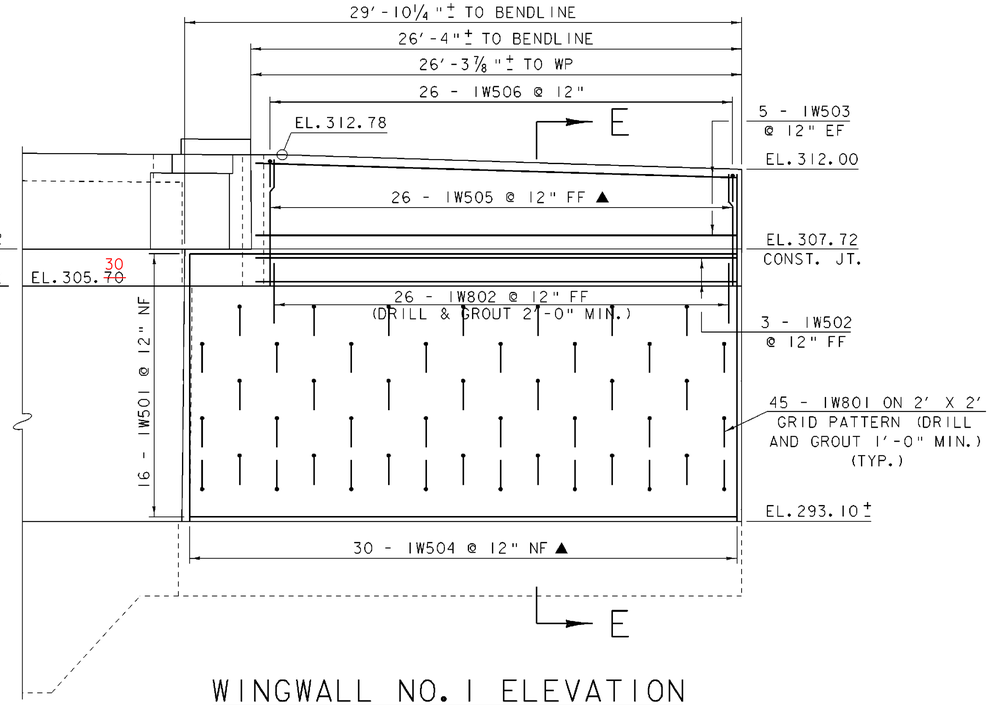

WINGWALL NO. 1 ELEVATION

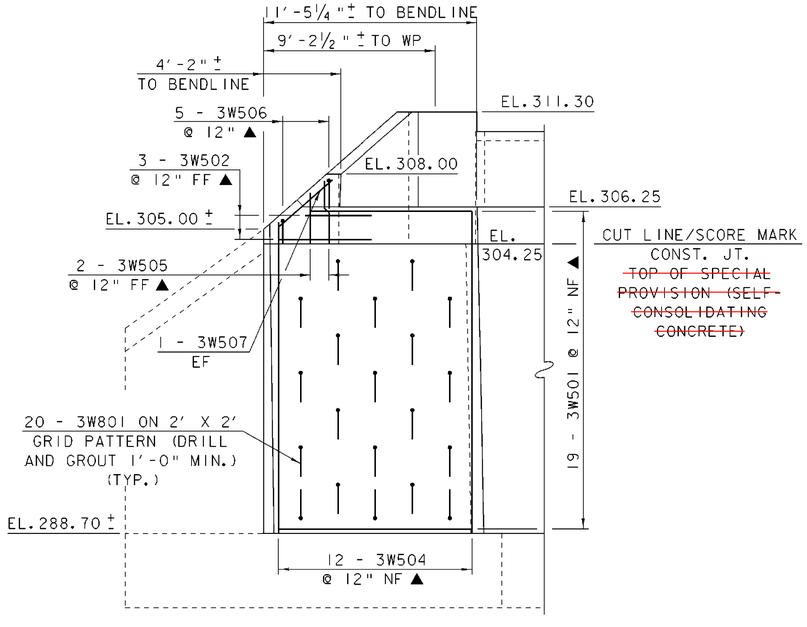

WINGWALL NO. 3 ELEVATION

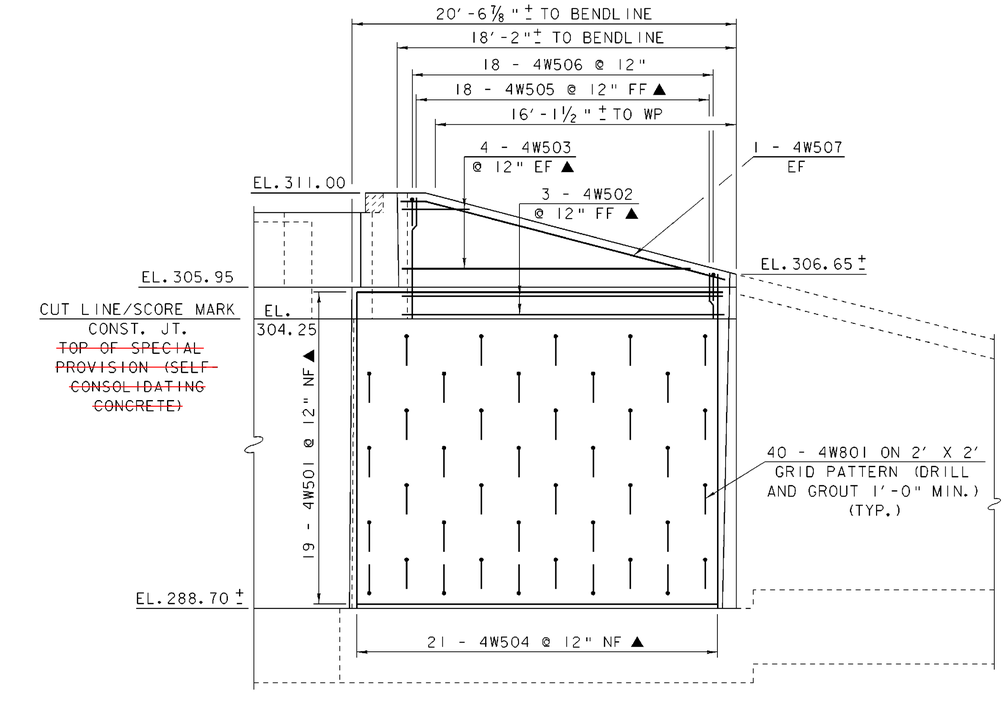

WINGWALL NO. 4 ELEVATION

SCALE: 1/4" = 1'-0"

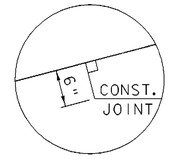

DETAIL "A"

SCALE: 1" = 1'-0"

NOTE:

NF = NEAR FACE
FF = FAR FACE
EF = EACH FACE
▲ = CUT TO FIT IN FIELD
3" CLR. UNLESS OTHERWISE NOTED
2'-2" BAR LAP UNLESS OTHERWISE NOTED

WINGWALL ELEVATIONS

PROJECT NAME: SPRINGFIELD
PROJECT NUMBER: BHO 1442(30)

FILE NAME: 96j348/str/s96j348ab.dgn
PROJECT MANAGER: R. R. WHITCOMB
DESIGNED BY: C. CARLSON
s96j348ww.1

PLOT DATE: 27-DEC-2007
DRAWN BY: G. ROY
CHECKED BY: C. CARLSON
SHEET 46 OF 85

STATE OF VERMONT
AGENCY OF TRANSPORTATION

REINFORCING STEEL SCHEDULE

ITEM	EACH	SIZE	LENGTH	MARK	TYPE	A	B	C	D	E	F	G	H	J	K	R	O
	DECK																
✳	217	5	41'- 9"	ES501	STR												
	4	5	37'- 11"	ES503	STR												
✳	9	5	7'- 6"	ES504	STR												
	12	5	1'- 6"	ES505	STR												
	648	5	2'- 2"	ES502	17		1'- 4"	0'- 10"	---								
	25	5	4'- 3"	ES506	S11								4'- 0"				0'- 3"
✳ ▲	162	6	24'- 0"	ES601	STR												
✳ ▲	191	6	24'- 8"	ES602	1	0'- 8"	24'- 0"					---		0'- 6"			
	APPROACH SLAB NO. 1																
✳ ▲	23	5	37'- 8"	1EAS501	STR												
✳ ▲	30	9	20'- 9"	1EAS901	1	1'- 3"	19'- 6"					---		0'- 11"			
	APPROACH SLAB NO. 2																
✳ ▲	23	5	37'- 8"	2EAS501	STR												
✳ ▲	30	9	20'- 9"	2EAS901	1	1'- 3"	19'- 6"					---		0'- 11"			
	ABUTMENT NO. 1																
▲	36	5	22'- 10"	1A501	STR												
▲	44	5	22'- 11"	1A502	STR												
▲	20	5	25'- 10"	1A503	STR												
✳ ▲	105	5	6'- 6"	1A504	STR												
	116	5	4'- 0"	1A505	STR												
▲	30	5	18'- 10"	1A506	STR												
▲	72	5	4'- 8"	1A507	STR												
	4	5	18'- 10"	1EA510	STR												
▲	12	5	8'- 0"	1A511	STR												
▲	36	5	7'- 7"	1A512	STR												
▲	6	5	6'- 0"	1EA516	STR												
▲	34	5	8'- 5"	1A508	S10		3'- 4"	1'- 9"	3'- 4"								
▲	41	5	9'- 9"	1EA509	S10		4'- 6"	0'- 9"	4'- 6"								
▲	15	5	10'- 2"	1A513	S10		4'- 10"	0'- 6"	4'- 10"								
▲	2	5	9'- 0"	1EA514	S10		4'- 3"	0'- 6"	4'- 3"								
	3	5	2'- 11"	1EA515	17		---	1'- 7"	1'- 4"								
	17	8	3'- 3"	1EA803	STR												
	89	8	3'- 4"	1A801	17		---	1'- 8"	1'- 8"								
	22	8	3'- 8"	1A802	17		---	1'- 8"	2'- 0"								
	WINGWALL NO. 1																
	16	5	29'- 9"	1W501	STR												
	3	5	25'- 11"	1W502	STR												
	10	5	25'- 11"	1W503	STR												
▲	30	5	19'- 5"	1W504	STR												
✳ ▲	27	5	6'- 9"	1W505	STR												
	26	5	4'- 0"	1W506	S10		1'- 6"	1'- 0"	1'- 6"								
	45	8	3'- 4"	1W801	17		---	1'- 8"	1'- 8"								
	26	8	3'- 6"	1W802	STR												
	WINGWALL NO. 2																
▲	21	5	26'- 7"	2W501	STR												
▲	12	5	18'- 9"	2W502	STR												
▲	4	5	5'- 4"	2W503	STR												
▲	27	5	21'- 9"	2W504	STR												
▲	19	5	11'- 5"	2W505	STR												
	2	5	18'- 10"	2W508	STR												
	19	5	4'- 0"	2W506	S10		1'- 6"	1'- 0"	1'- 6"								
	2	5	21'- 9"	2W507	19		---	19'- 6"	2'- 3"				1'- 3"		1'- 10"		
	48	8	3'- 4"	2W801	17		---	1'- 8"	1'- 8"								
	19	8	3'- 6"	2W802	STR												

ITEM	EACH	SIZE	LENGTH	MARK	TYPE	A	B	C	D	E	F	G	H	J	K	R	O
	ABUTMENT NO. 2																
▲	32	5	24'- 0"	2A501	STR												
▲	46	5	19'- 9"	2A502	STR												
▲	20	5	25'- 9"	2A503	STR												
✳ ▲	105	5	6'- 3"	2A504	STR												
▲	116	5	4'- 0"	2A505	STR												
▲	30	5	18'- 7"	2A506	STR												
▲	72	5	4'- 6"	2A507	STR												
▲	12	5	7'- 5"	2A510	STR												
▲	32	5	7'- 2"	2A511	STR												
▲	35	5	8'- 0"	2A508	S10		3'- 3"	1'- 6"	3'- 3"								
▲	36	5	7'- 0"	2A509	S10		3'- 3"	0'- 6"	3'- 3"								
▲	23	5	7'- 8"	2A512	S10		3'- 7"	0'- 6"	3'- 7"								
	18	8	3'- 3"	2EA803	STR												
	92	8	3'- 4"	2A801	17		---	1'- 8"	1'- 8"								
	26	8	3'- 8"	2A802	17		---	1'- 8"	2'- 0"								
	WINGWALL NO. 3																
▲	19	5	11'- 2"	3W501	STR												
▲	3	5	5'- 0"	3W502	STR												
				3W503			NOT USED										
▲	12	5	19'- 0"	3W504	STR												
▲	2	5	2'- 8"	3W505	STR												
	2	5	3'- 10"	3W507	STR												
▲	5	5	4'- 0"	3W508	S10		1'- 6"	1'- 0"	1'- 6"								
	20	8	3'- 4"	3W801	17		---	1'- 8"	1'- 8"								
	WINGWALL NO. 4																
▲	19	5	20'- 6"	4W501	STR												
▲	3	5	17'- 8"	4W502	STR												
▲	8	5	11'- 4"	4W503	STR												
▲	21	5	22'- 0"	4W504	STR												
✳ ▲	19	5	5'- 9"	4W505	STR												
▲	18	5	4'- 0"	4W506	STR		1'- 6"	1'- 0"	1'- 6"								
	2	5	18'- 0"	4W507	19		---	1'- 4"	16'- 8"								
	40	8	3'- 4"	4W801	17		---	1'- 8"	1'- 8"								

~ NOTES ~

1. UNLESS OTHERWISE DESIGNATED, ALL BAR REINFORCEMENT FOR CONCRETE IN SIZES UP TO AND INCLUDING NO. 18 SHALL CONFORM TO THE REQUIREMENTS OF THE "SPECIFICATIONS FOR DEFORMED BILLET-STEEL BARS FOR CONCRETE REINFORCEMENT", AASHTO M 31 (ASTM A 615-SI). ALL BARS SHALL BE GRADE 60, UNLESS OTHERWISE DESIGNATED.
2. FOR TYPICAL BENDING DETAILS, RECOMMENDED PIN DIAMETER "D" OF BENDS AND HOOKS, AND OTHER STANDARD PRACTICE, SEE CURRENT CONCRETE REINFORCING STEEL INSTITUTE "MANUAL OF STANDARD PRACTICE".
3. BARS WHICH REQUIRE MORE ACCURATE BENDING THAN STANDARD PRACTICES SHOULD HAVE LIMITS INDICATED.
4. ALL DIMENSIONS ARE OUT TO OUT OF BAR EXCEPT "A" AND "G" ON STANDARD 180 DEGREE AND 135 DEGREE HOOKS.
5. "J" DIMENSION ON 180 DEGREE HOOKS TO BE SHOWN ONLY WHERE NECESSARY TO RESTRICT HOOK SIZE. OTHERWISE, STANDARD HOOKS ARE TO BE USED.
6. "H" DIMENSION ON STIRRUPS TO BE SHOWN ONLY WHEN NECESSARY TO MAINTAIN CLEARANCES.
7. WHERE SLOPE DIFFERS FROM 45 DEGREES, DIMENSIONS "H" AND "K" MUST BE SHOWN.
8. ▲ DENOTES BARS TO BE CUT IN FIELD.
9. ✳ DENOTES ONE EXTRA BAR ADDED FOR TESTING PURPOSES.
10. △ DENOTES TWO EXTRA BARS ADDED FOR TESTING PURPOSES.
11. E IN BAR MARK PREFIX DENOTES EPOXY COATED REINFORCING STEEL.

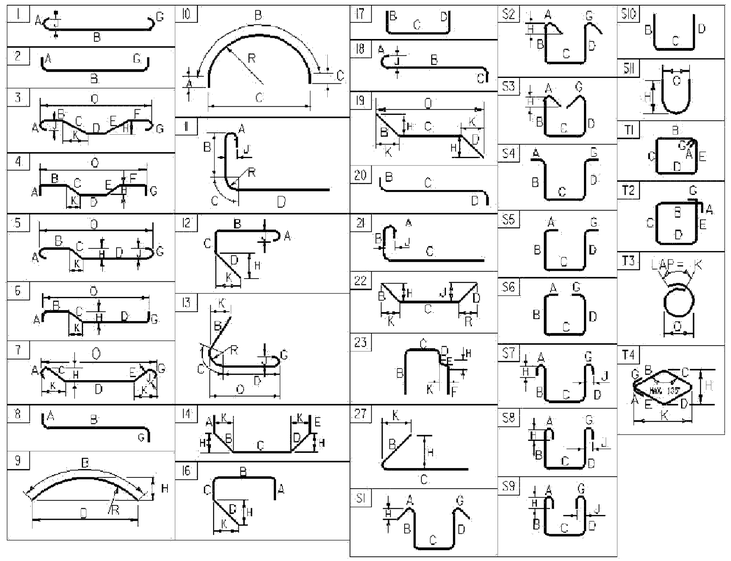

ASTM STANDARD REINFORCING BARS

BAR SIZE DESIGNATION	WEIGHT POUNDS PER FOOT	NOMINAL DIMENSIONS ROUND SECTION DIAMETER INCHES	AREA INCHES²	PERIMETER INCHES
#3	0.376	0.375	0.11	1.178
#4	0.668	0.500	0.20	1.571
#5	1.043	0.625	0.31	1.963
#6	1.502	0.750	0.44	2.356
#7	2.044	0.875	0.60	2.749
#8	2.670	1.000	0.79	3.142
#9	3.400	1.128	1.00	3.544
#10	4.303	1.270	1.27	3.990
#11	5.313	1.410	1.56	4.430
#14	7.65	1.693	2.25	5.32
#18	13.60	2.257	4.00	7.09

PROJECT NAME: **SPRINGFIELD**
PROJECT NUMBER: **BHO 1442(30)**

FILE NAME: **s96j348rss.xls**
PROJECT MANAGER: **R. WHITCOMB**
DESIGNED BY: **J. PERRIGO**
REINFORCING STEEL SCHEDULE SHEET

PLOT DATE: **9/26/2007**
DRAWN BY: **L. BULLOCK**
CHECKED BY: **C. CARLSON**
SHEET **47** OF **85**

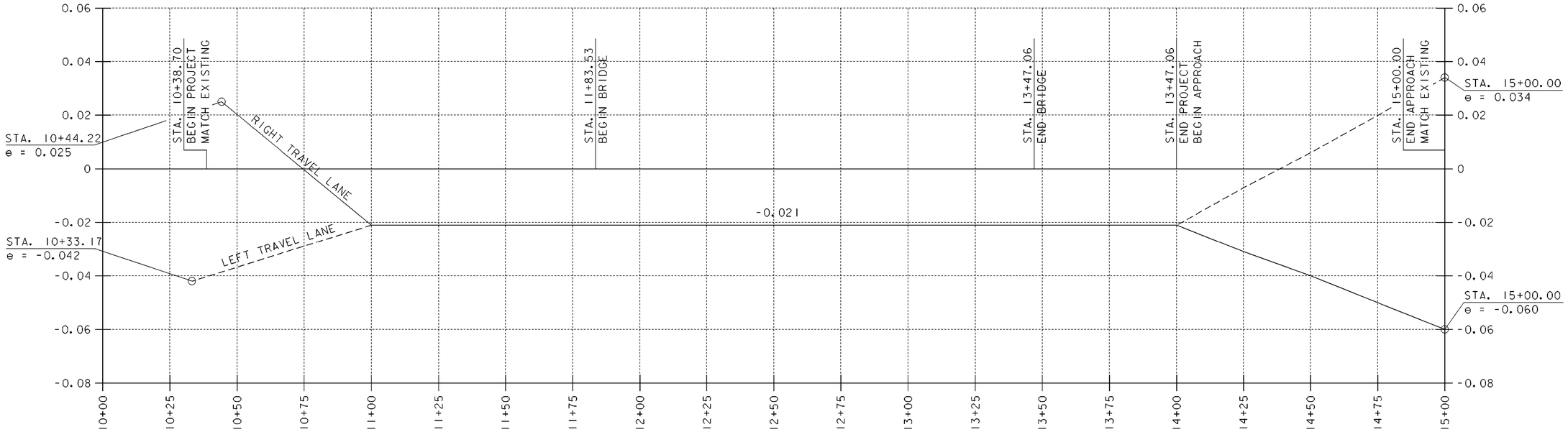

BANKING DIAGRAM

20 0 20

HORIZ. SCALE: 1" = 20'-0"

0.02 0 0.02

VERT. SCALE: 1" = 0.02'/'

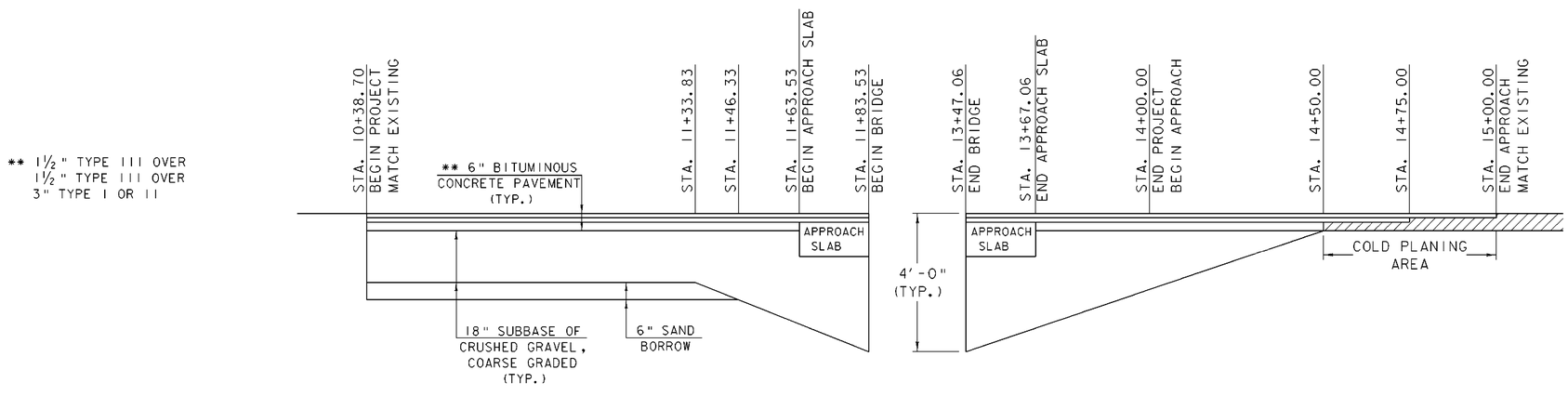

NOTES:

1. SEE MAINLINE CROSS SECTIONS TO DETERMINE CUT OR FILL.
2. SEE SHEET 3 OF THE PLANS FOR ADDITIONAL ABUTMENT EARTHWORK DETAILS.

MATERIAL TRANSITION DETAIL

HORIZ.: 20 0 20

SCALE: 1" = 20'-0"

VERT.: 2 0 2

SCALE: 1" = 2'-0"

BANKING DIAGRAM & MATERIAL TRANSITION DETAIL

PROJECT NAME: SPRINGFIELD
PROJECT NUMBER: BHO 1442(30)

FILE NAME: 96J348/str/s96J348xsl.dgn
PROJECT MANAGER: R. R. WHITCOMB
DESIGNED BY: J. PERRIGO
s96J348mat.i

PLOT DATE: 27-DEC-2007
DRAWN BY: J. PERRIGO
CHECKED BY: G. ROY
SHEET 48 OF 85