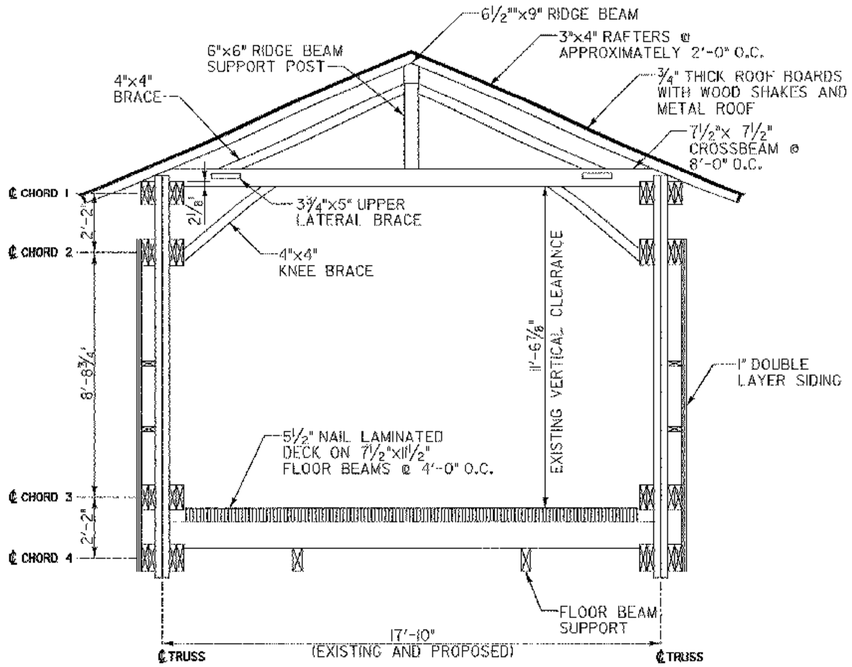

EXISTING TYPICAL SECTION

SCALE: ⅜" = 1'-0"

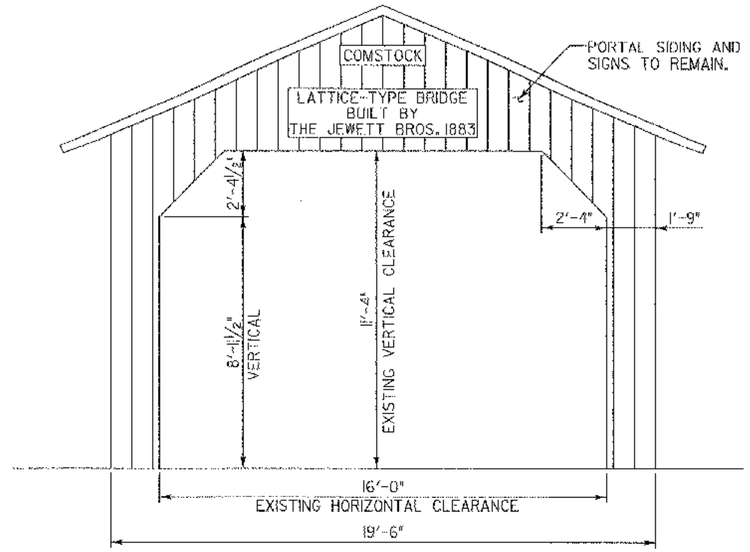

EXISTING PORTAL SECTION

(EAST PORTAL SHOWN, WEST PORTAL SIMILAR)

SCALE: ⅜" = 1'-0"

PLAN NOTES:

1. APPLY FIRE RETARDANT AND INSECTICIDE/FUNGICIDE COATINGS TO WOODEN BRIDGE MEMBERS AS OUTLINED IN SPECIFICATIONS.
2. SIDING IS TO BE REMOVED INTACT AND STORED ON-SITE. FOR REINSTALLATION AFTER COMPLETION OF TRUSS REPAIRS. SIDING THAT IS NOT SALVAGEABLE SHALL BE REPLACED. NEW SIDING BOARDS SHALL CONSIST OF SINGLE VERTICAL PIECES IN ALL LOCATIONS. HORIZONTAL JOINTS IN THE SIDING WILL NOT BE ALLOWED.
3. SEVERE RACKING EXISTS IN PORTAL SECTIONS. PORTALS ARE TO BE PLUMMED AND STRAIGHTENED.

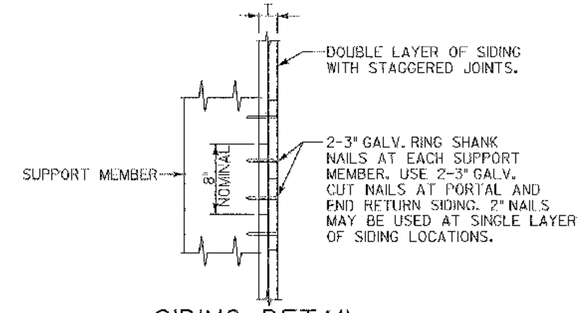

SIDING DETAIL

SCALE: 1½" = 1'-0"

WORKING STRESS LOAD RATING (TONS)

(FLOOR BEAMS CONTROL LOAD RATING)

STRESS LEVELS	H (6)	HS (20)	3S2	TRUCK 6 AXLE	3A STR	4A STR	5A SEMI
INVENTORY	6.3	[redacted]					
POSTED (89% OF OPERATING)	7.6	[redacted]					
OPERATING	[redacted]						

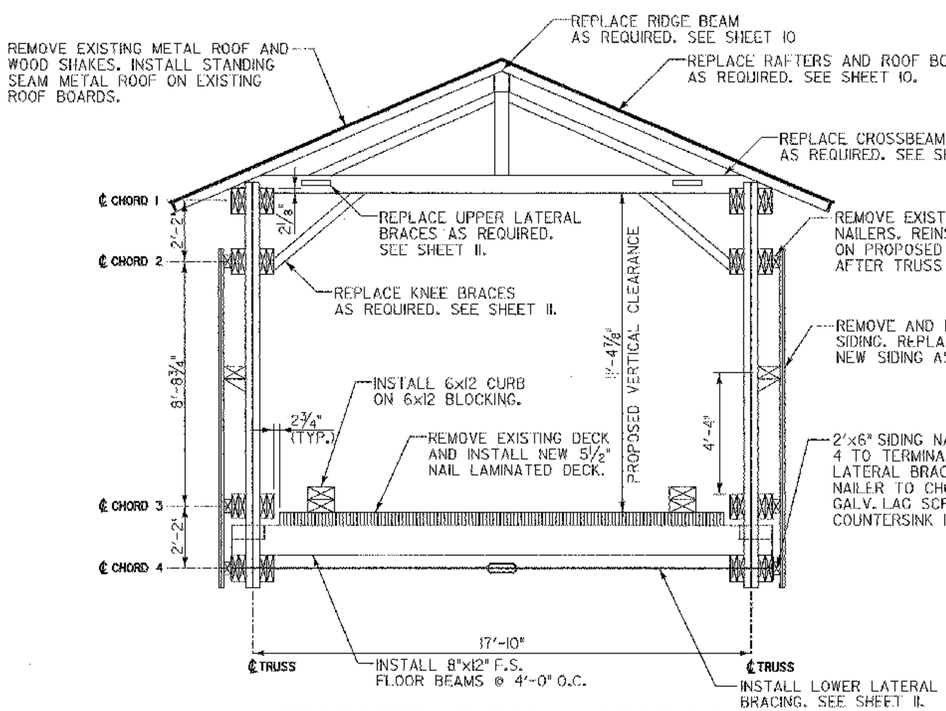

PROPOSED TYPICAL SECTION

SCALE: ⅜" = 1'-0"

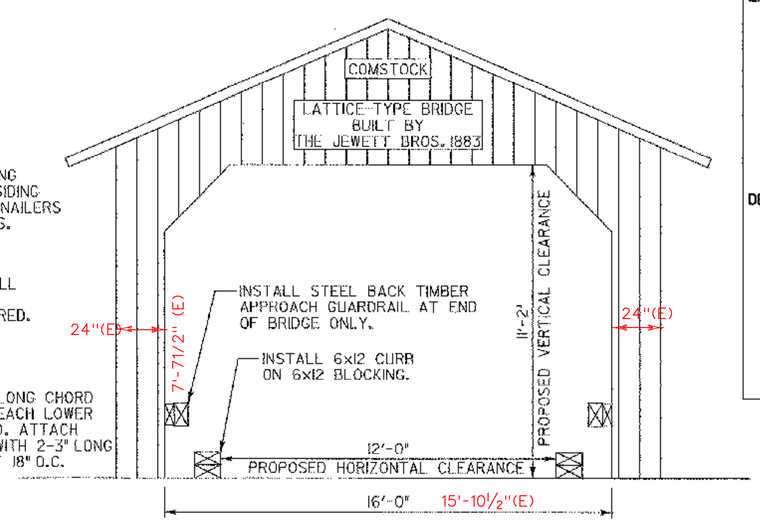

PROPOSED PORTAL SECTION

(EAST PORTAL SHOWN, WEST SIMILAR)

SCALE: ⅜" = 1'-0"

EXISTING STRUCTURE:

STRUCTURE TYPE: SINGLE SPAN TIMBER COVERED BRIDGE, YEAR BUILT: 1883

CLEAR SPAN (NORMAL TO STREAM): 64'-11"+/-

VERTICAL CLEARANCE ABOVE STREAMBED: VARIES 16 FT.+/- MAX.

TYPE OF MATERIAL UNDER SUBSTRUCTURE: PRIMARILY LEDGE

WATER SURFACE ELEVATION: VARIES

LONG TERM STREAM BED CHANGES: NONE

IS THE ROADWAY OVERTOPPED BELOW THE Q100? YES FREQUENCY: N/A

RELIEF ELEVATION: NO DISCHARGE OVER ROAD @Q100: NONE

DESIGN CRITERIA:

1. DESIGN LIVE LOAD AASHTO H6
2. DESIGN SPAN 68 FEET
3. ALLOWABLE LOAD FOR SPREAD FOOTINGS ON SOIL N/A ON LEDGE N/A
4. ALLOWABLE LOAD FOR PILING N/A TYPE N/A ESTIMATED LENGTH N/A
5. STRUCTURAL STEEL AASHTO GRADE N/A
6. REINFORCING STEEL GRADE 60
7. CONCRETE CLASS B (HPCA) f'_c = 3500 PSI

HTA consulting engineers
150 Dow Street - Manchester, NH 03101-1227
Tel 603-669-5555 Fax 603-669-1166
184 South Winooski Ave. - Burlington, VT 05401
Tel 802-860-1331 Fax 802-860-6489
Web Page: www.hetyleatanner.com E-Mail: hta@htaeng.com

STATE OF VERMONT
AGENCY OF TRANSPORTATION

Town Of MONTGOMERY	Bridge No. 41
Highway No. 42	Log Sta. — / Surv. Sta. —
COMSTOCK COVERED BRIDGE	
PRELIMINARY INFORMATION	
Designed By J.W. ROCKWELL	Drawn By J.D. GEER
Checked By S.T. JAMES / Date 1-2003	Bridge Design Supervisor / Date
PROJECT MONTGOMERY	PROJECT NO. BHO 1448(26)
L.C.C. Info. —	ZJ3041
Bridge Sheet No. 2	Sheet 2 of 18

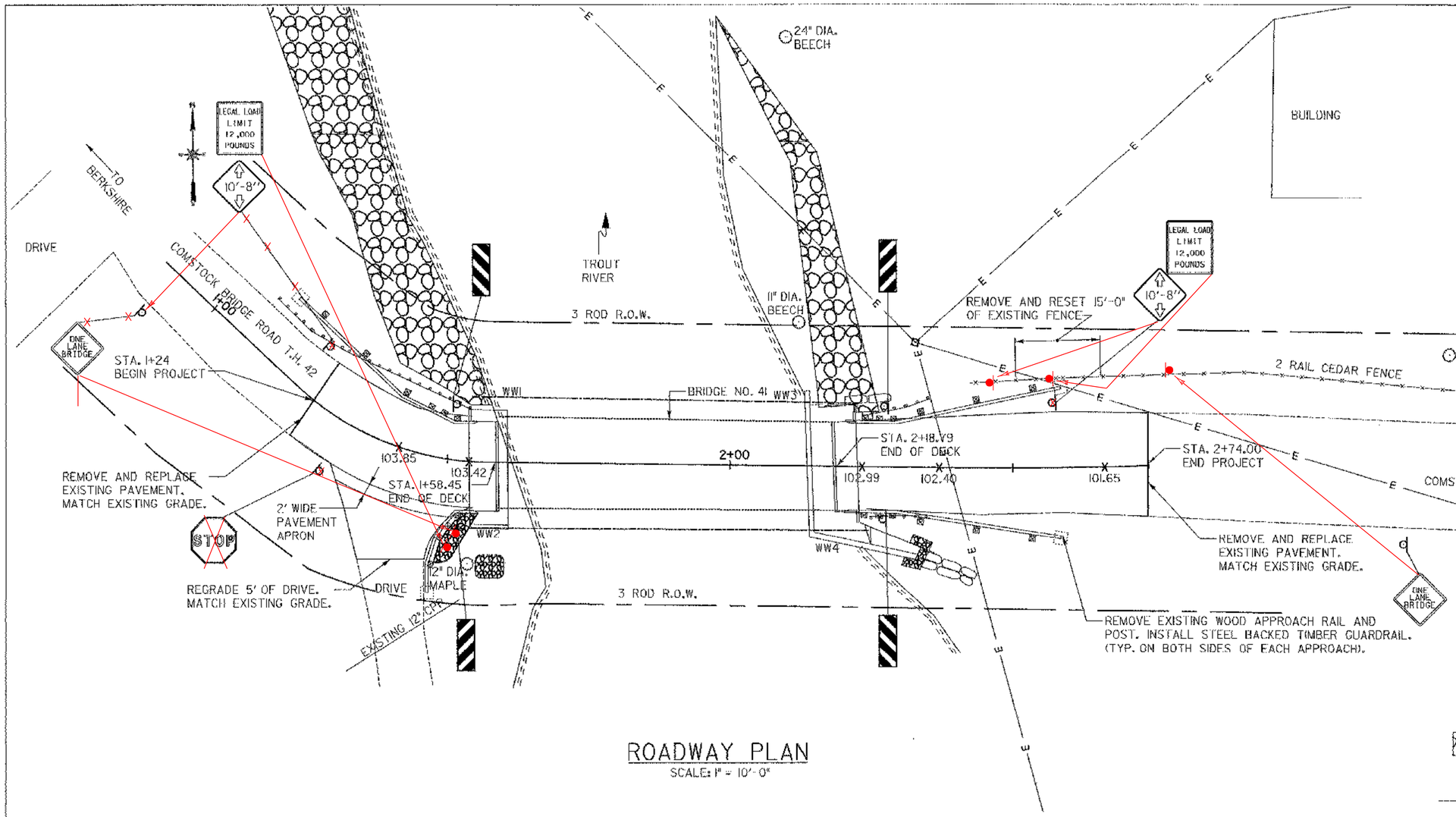

ROADWAY PLAN

SCALE: 1" = 10'-0"

PLAN NOTES:

1. INSTALL TEMPORARY TRAFFIC BARRIERS AT EACH APPROACH TO THE BRIDGE AS DIRECTED BY THE RESIDENT ENGINEER.
2. ALL SIGNS DETAILED ON THIS SHEET ARE PROPOSED. A LOAD LIMIT SIGN SHALL BE ADDED AT THE ENDS OF COMSTOCK BRIDGE ROAD AND SYLVESTER ROAD AS DIRECTED BY THE ENGINEER.
3. SIGN LOCATIONS SHOWN ARE APPROXIMATE. FINAL LOCATION WILL BE DETERMINED BY THE RESIDENT ENGINEER IN THE FIELD.
4. INSTALL TEMPORARY TRAFFIC BARRICADES AT BOTH BRIDGE APPROACHES.
5. SEE SHEETS 15 - 17 FOR STEEL BACKED TIMBER GUARDRAIL DETAILS.
6. ALL WORK SHALL BE COMPLETED WITHIN THE R.O.W. AS SHOWN.
7. REMOVE AND DISPOSE OF ALL EXISTING WOOD APPROACH RAIL AND POSTS (4 LOCATIONS).

BASELINE CONTROL:

1. STA. 1+58.45 AND STA. 2+18.79, POINT LOCATED AT CENTER OF EXISTING BRIDGE AT THE END OF DECK.
2. SEE SHEET 14 FOR TYPICAL APPROACH AND DRIVE SECTIONS. PROPOSED PAVEMENT ELEVATIONS TO MATCH EXISTING.

LEGEND

- EXISTING STONE FILL
- EDGE OF RIVER
- E — OVERHEAD ELECTRIC
- EXISTING RAIL
- PROPSOSED RAIL
- X — PROPOSED SPOT ELEVATIONS
- EXISTING LEDGE

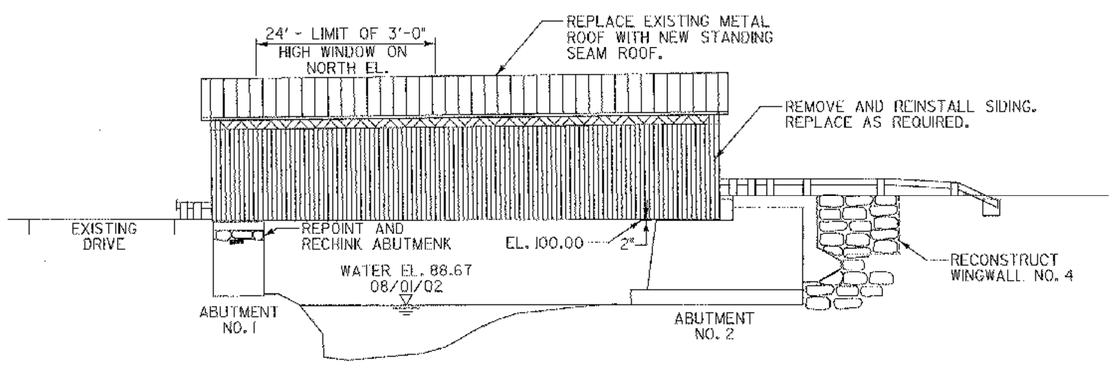

ELEVATION

(SOUTH ELEVATION)

SCALE: 1" = 10'-0"

HTA consulting engineers
150 Dow Street - Manchester, NH 03101-1227
Tel 603-669-5555 Fax 603-669-4168
184 South Winooski Ave. - Burlington, VT 05401
Tel 802-860-1331 Fax 802-869-6459
Web Page: www.hoyletanner.com E-Mail: hta@hoyletanner.com

STATE OF VERMONT
AGENCY OF TRANSPORTATION

Town Of MONTGOMERY	Bridge No. 41
Highway No. 42	Log Sta. — / Surv. Sta. —
COMSTOCK COVERED BRIDGE	
ROADWAY PLAN & ELEVATION	
Designed By J.W. ROCKWELL	Drawn By J.D. GEER
Checked By S.T. JAMES — Date 1-2003	Bridge Design Supervisor — Date
PROJECT MONTGOMERY	PROJECT NO. BHO 1448(26)
L.G.C. Info. —	ZJ304RP
Bridge Sheet No. 4	Sheet 4 of 18

STATE OF VERMONT
AGENCY OF TRANSPORTATION

TRAFFIC SIGN SUMMARY SHEET

MILEMARKER, STATION, OR SIGN NUMBER	SIGN LEGEND	SIGN DIMENSIONS EA	WIDTH (in)	HEIGHT (in)	NEW & SALVAGED SIGNS "A"	"B"	SALV SIGN	SALV TIS	EXIST POST RETAIN	SALVAGE	NEW SIGN POSTS NO. OF POSTS	FLANGED CHANNEL lb/ft 1.12	2.0	3.0	SQUARE STEEL (in) lb/ft 1.75 1.88	2.0 2.16	2.5 3.35	ANCHOR	SLEEVE	TUBULAR ALUMINUM Ø (in) lb/ft 3.0 1.3	4.0 1.7	4.0 MOD 1.7	FOUND-ATION	TUBULAR STEEL Ø (in) lb/ft 3.0 7.6	3.5 9.0	4.0 10.8	5.0 14.6	W-SHAPE STEEL FTG. SIZE 24"	30"	WEIGHT	POST SIZE	SIGN REQUIRED	REMARKS	SIGN DETAIL DETAIL ON SHEET NUMBER	STD. SHEET NUMBER
												OPTION ITEMS																								
W12-2	10'-8"	2	30"	30"	6.25						2			16 X																				X	E-155
W5-3	ONE LANE BRIDGE	2	30"	30"	6.25						-			~~X~~																				5	SEE BELOW
OM-3L		2	12"	36"	3.00						2 ~~1~~			10 X 10																				X	E-120
OM-3R		2	12"	36"	3.00						2 ~~1~~			10 X 10																				X	E-120
VR-017	LEGAL LOAD LIMIT 12,000 POUNDS	5	24"	30"	5.00						2 ~~1~~			14 X 14																					

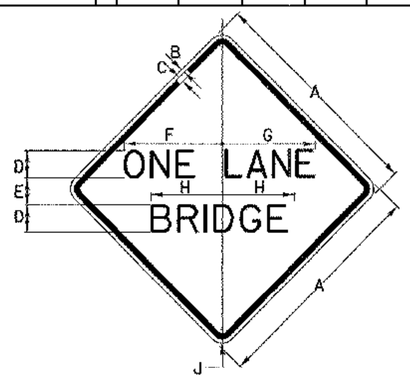

COLORS
LEGEND-BLACK (NON - REFL.)
BACKGROUND - YELLOW (REFL.)

SIGN	DIMENSIONS (INCHES) A	B	C	D	E	F	G	H	J
MIN.	30	1/2	3/4	5C	3 1/4	13 5/16	12 11/16	9 1/8	1 7/8
STD.	36	5/8	7/8	6C	4	16	15 1/4	11 1/2	2 1/4
SPECIAL	48	3/4	1 1/4	8C	5	21 1/4	20 1/4	15 3/8	3

FINAL POST LENGTHS ARE TO BE DETERMINED IN THE FIELD. POST SIZES ARE COMPUTED BASED ON INFORMATION FURNISHED ON THE STANDARD SHEETS AND THE TRAFFIC & SAFETY DIVISION'S 'SIGN POST DESIGN GUIDELINE.'

TOTALS	XX					FT	FT	FT	FT	FT	FT		EA	LB	LB	LB		LB	LB	LB	LB			
	SF 62.0	SF	EA.	SF		FT ~~166~~ 100			FT					LB			EA.	LB				EA.	EA.	LB

HTA consulting engineers
150 Dow Street - Manchester, NH 03101-1227
Tel:603-669-5555 Fax: 603-669-4618
184 South Winooski Ave. - Burlington, VT 05401
Tel:802-860-1331 Fax: 802-860-6499
Web Page: www.haytomasser.com E-Mail: hta@lite-rite.com

STATE OF VERMONT
AGENCY OF TRANSPORTATION

Town Of MONTGOMERY	Bridge No. 41
Highway No. 42	Log Sta. —
	Surv. Sta. —

COMSTOCK COVERED BRIDGE

TRAFFIC SIGN SUMMARY SHEET

Designed By JW.ROCKWELL	Drawn By J.D.GEER
Checked By S.T.JAMES Date 1-2003	Bridge Design Supervisor Date
PROJECT MONTGOMERY	PROJECT NO. BHO 1448(26)
L.G.C. Info. —	ZJ304TRF
Bridge Sheet No. 5	Sheet 5 of 18

GENERAL NOTES

1. ALL MATERIALS AND CONSTRUCTION SHALL CONFORM TO STATE OF VERMONT AGENCY OF TRANSPORTATION STANDARD SPECIFICATIONS FOR CONSTRUCTION ADOPTED 2001, AND IT'S LATEST REVISIONS AND THE AASHTO STANDARD SPECIFICATIONS FOR HIGHWAY BRIDGES, 16TH EDITION, DATED 1996, AND IT'S LATEST REVISIONS.
2. DESIGN OF THE REHABILITATED STRUCTURE IS FOR AN AASHTO H6 TRUCK LOAD.
3. ALL DIMENSIONS SHOWN ON THE PLANS SHALL BE CHECKED IN THE FIELD PRIOR TO COMMENCING THE WORK. ACTUAL WORK SHALL MATCH FIELD CONDITIONS.
4. BRIDGE 41 SHALL REMAIN CLOSED TO TRAFFIC DURING CONSTRUCTION.
5. THE CONTRACTOR SHALL ERECT AND MAINTAIN ALL CONSTRUCTION SIGNS AND BARRACADES. ALL DETOUR TRAFFIC CONTROL SIGNS WILL BE SUPPLIED, INSTALLED, MAINTAINED AND REMOVED BY THE TOWN OF MONTGOMERY.
6. ANY EXISTING SIGNS SHALL BECOME THE PROPERTY OF THE TOWN OF MONTGOMERY.
7. PARTIAL REMOVAL OF THE EXISTING BRIDGE STRUCTURE, ITEM 529.20 EXCEPT AS NOTED OTHERWISE ON THE PLANS, SHALL INCLUDE THE REMOVAL AND DISPOSAL OF THE FOLLOWING EXISTING ITEMS:
   - A. ROOFING (METAL ROOF AND SHAKES)
   - B. FLOOR DECKING AND FLOOR BEAMS
   - C. LONGITUDINAL FLOOR BEAM SUPPORT MEMBERS
   - D. BEARING BLOCKS
   - E. SIDING (PARTIAL)

   REMOVAL AND DISPOSAL OF EXISTING BRIDGE MEMBERS, NOT NOTED ABOVE, SHALL BE CONSIDERED INCIDENTAL TO THE APPLICABLE ITEM 522.20 AND SHALL BE INCLUDED IN THE REPLACEMENT COST. ALL REMOVED MATERIAL SHALL BE STOCKPILED ON SITE FOR REMOVAL BY THE TOWN.
8. THE CONTRACTOR SHALL TAKE SPECIAL CARE AND PRECAUTION TO INSURE THAT NO DEBRIS FALLS INTO THE TROUT RIVER DURING CONSTRUCTION.
9. ALL WORK SHALL BE COMPLETED WITHIN THE R.O.W. AS SHOWN ON SHEET 4.
10. THE CONTRACTOR SHALL AVOID UNNECESSARY DISASSEMBLY OF THE TOWN LATTICE TRUSSES. ONLY THE JOINTS THAT MUST BE DISASSEMBLED TO EFFECT REPAIRS TO THE TRUSSES SHALL BE DISASSEMBLED. AT NO POINT IN THE CONSTRUCTION SEQUENCE SHALL THE TRUSSES BE DISASSEMBLED TO THE EXTENT THAT THE EXISTING GEOMETRY AND MEMBER LOCATION IS LOST.

CONCRETE NOTES

C1. ALL REINFORCING STEEL SHALL BE DETAILED AND FABRICATED USING PROCEDURES AND TOLERANCES IN ACCORDANCE WITH APPLICABLE PUBLICATIONS OF THE "CONCRETE REINFORCING STEEL INSTITUTE" (CRSI).

C2. REINFORCING PLACEMENT TOLERANCES SHALL BE:

SPACING	+/- 1"
CLEARANCE	+/- 1/4"

C3. ALL EXPOSED EDGES OF CONCRETE SHALL BE CHAMFERED 3/4" BY 3/4".

C4. WATER REPELLENT SHALL BE APPLIED TO ALL NEW AND EXISTING EXPOSED CONCRETE SURFACES.

STRUCTURAL STEEL NOTES

S1. ALL STRUCTURAL STEEL ASSOCIATED WITH THE BRIDGE INCLUDING PLATES, BOLTS, LAG BOLTS, TURNBUCKLES, NUTS, WASHERS, RODS AND MISCELLANEOUS STEEL, SHALL BE HOT DIPPED GLAVANIZED IN ACCORDANCE WITH ASTM/AASHTO 232M/M232, ASTM A153/A153M EXCEPT FOR PLATES WHICH SHALL BE GALVANIZED PER AASHTO M 111M/M 111 AND PAID FOR UNDER ITEM 506.75 UNLESS OTHERWISE NOTED. ALL STEEL PLATES SHALL BE ASTM A36, ALL RODS SHALL BE ASTM A307.

S2. THE ONLY STEEL ITEMS NOT PAID FOR UNDER ITEM 506.75 ARE REBAR, AND BOLTS, NUTS, PLATES ETC. REQUIRED FOR THE STEEL BACKED GUARDRAIL AND AS NOTED IN THE NOTE W4. THE HOLD DOWN RODS, NUTS AND PLATES ARE TO BE PAID UNDER ITEM 531.10.

RECOMMENDED SEQUENCE OF WORK

1. THE TOWN OF MONTGOMERY WILL INSTALL THE TEMPORARY DETOUR SIGNS. THE CONTRACTOR SHALL INSTALL CONSTRUCTION SIGNS AND BARRICADES AT EACH END OF THE BRIDGE AND CLOSE IT TO TRAFFIC.
2. INSTALL TEMPORARY BRIDGE SUPPORT STRUCTURE OR MOVE THE BRIDGE TO A STAGING AREA TO COMPLETE REPAIRS. THE CONTRACTOR SHALL SUBMIT PLANS AND DESIGN CALCULATIONS FOR THE PROPOSED TEMPORARY STRUCTURE, IF USED, TO THE RESIDENT ENGINEER PRIOR TO THE INSTALLATION OF THE SUPPORT STRUCTURE.
3. REMOVE EXISTING METAL ROOF AND SHAKES.
4. REMOVE THE EXISTING FLOOR DECKING, FLOOR BEAMS, LONGITUDINAL FLOOR BEAM SUPPORTS AND SIDING MEMBERS. PROVIDE TEMPORARY SUPPORT OF THE LOWER CHORDS AS REQUIRED.
5. CHORD 4 OF EACH TRUSS AND ALL TRUNNELS THROUGH IT SHALL BE REMOVED IN THEIR ENTIRETY TO FACILITATE MEMBER INSPECTION AND NEW FLOOR BEAM INSTALLATION.
6. THE EXISTING BRIDGE SHALL BE JACKED AND SHORED AS REQUIRED TO STRAIGHTEN, RELEASE STRESSES, PLUMB AND RE-ALIGN THE TRUSSES. SHIMMING OF THE EXISTING TRUSSES WITH HARDWOOD SHIMS MAY BE REQUIRED. THE CONTRACTOR SHALL SUBMIT THE PROPOSED METHOD OF JACKING AND SHORING TO THE RESIDENT ENGINEER PRIOR TO THE START OF JACKING OPERATIONS. (SEE SPECIFICATIONS).
7. REPLACE BRIDGE MEMBERS AS DETAILED IN CONTRACT DRAWINGS AND COMPLETE ABUTMENT WORK.
8. COMPLETE ROADWAY AND APPROACH WORK AS DETAILED ON DRAWINGS.
9. COMPLETE REMAINING WORK ITEMS, REMOVE TEMPORARY BRIDGE SUPPORT STRUCTURE, IF USED, REOPEN BRIDGE TO TRAFFIC.

WOOD NOTES

W1. ALL WOOD CONSTRUCTION SHALL COMPLY WITH THE LATEST AASHTO SPECIFICATIONS, THE NATIONAL DESIGN SPECIFICATION (NDS) AND SUPPLEMENT FOR WOOD CONSTRUCTION, AND THE AMERICAN INSTITUTE OF TIMBER CONSTRUCTION (AITC) SPECIFICATION.

W2. MOISTURE CONTENT OF WOOD USED SHALL NOT EXCEED 16% AT THE TIME OF USE FOR ALL MEMBERS LESS THAN 5" THICK AND 19% FOR ALL MEMBERS EQUAL TO OR GREATER THAN 5" THICK.

W3. EACH PIECE OF WOOD OR TIMBER SHALL BE GRADED, BY A RECOGNIZED LUMBER GRADING AGENCY. A CERTIFICATE OF COMPLIANCE SHALL BE SUBMITTED FOR ALL WOOD.

W4. ALL NUTS, BOLTS, WASHERS, AND SCREWS SHALL CONFORM TO ASTM A307, ALL NAILS AND SPIKES SHALL CONFORM TO ASTM 1667 AND BE HOT DIPPED GALVANIZED IN ACCORDANCE WITH ASTM A153. THE COST OF CONNECTORS FOR WOOD MEMBERS (CURBS, PLANKS, ETC.) IS PAID FOR UNDER THE CORRESPONDING LUMBER AND TIMBER PAY ITEM.

W5. ALL WOOD SHALL BE DOUGLAS FIR NO. 1 OR BETTER WHERE THE SPECIES IS NOT NOTED.

W6. ALL FIELD CUTS AND BORINGS OF TREATED WOOD SHALL BE TREATED WITH TWO COATS OF COPPER NAPHTHENATE LIBERALLY APPLIED PER SPECIFICATION SECTION 522.

W7. EXISTING TRUSS, ROOF RAFTER AND UPPER LATERAL BRACING JOINTS SHALL BE REPLICATED ON ALL STRUCTURE MEMBERS TO BE REPLACED UNLESS OTHERWISE NOTED IN THE CONTRACT DRAWINGS.

W8. THE WOOD CURB BLOCKING, AND TRIM TREATMENT SHALL COMPLY WITH STANDARD SPECIFICATION 726.01 TYPE II PENTACHLOROPHENOL.

W9. APPLY FIRE RETARDANT AND INSECTICIDE/FUNGICIDE COATING TO WOODEN BRIDGE MEMBERS AS OUTLINED IN THE SPECIFICATIONS.

MINIMUM ALLOWABLE WOOD STRESSES

SPECIES	SIZE	GRADE	F_b (PSI)	F_t (PSI)	F_v (PSI)	F_c (PSI)	E (10^6 PSI)
DOUGLAS FIR	2"-4" THICK	NO. 1	1000	675	95	1500	1.7
DOUGLAS FIR	BEAMS & STRINGERS*	NO. 1	1350	675	85	925	1.6
DOUGLAS FIR	POSTS & TIMBERS**	NO. 1	1200	825	85	1000	1.6
DOUGLAS FIR	2"-4" THICK	SELECT STRUCTURAL	1500	1000	95	1700	1.9
DOUGLAS FIR	BEAMS & STRINGERS*	SELECT STRUCTURAL	1600	950	85	1100	1.6
EASTERN HEMLOCK-TAMARACK	2"-4" THICK	NO. 1	775	350	85	1000	1.1
EASTERN HEMLOCK-TAMARACK	BEAMS & STRINGERS*	NO. 1	1150	775	85	800	1.2
EASTERN HEMLOCK-TAMARACK	POSTS & TIMBERS**	NO. 1	1100	725	85	875	1.3
EASTERN SPRUCE (SOFTWOODS)	2"-4" THICK	NO. 1	775	350	70	1000	1.1
EASTERN WHITE PINE	2"-4" THICK	NO. 1	775	350	70	1000	1.1
WHITE OAK	BEAMS & STRINGERS*	NO. 1	1200	575	105	775	1.0

* 5" & THICKER AND WIDTH MORE THAN 2 IN. GREATER THAN THICKNESS (E.G. 8x12)

** 5" & THICKER AND WIDTH NOT MORE THAN 2 IN. GREATER THAN THICKNESS (E.G. 6x6)

WOOD MATERIALS LIST

COMPONENT	EXISTING (AVERAGE SIZE IN INCHES)	PROPOSED (ACTUAL SIZE IN INCHES)	PROPOSED SPECIES & GRADE
CROSSBEAM	7 1/2x7 1/2	7 1/2x7 1/2	DOUGLAS FIR NO. 1
FLOOR BEAM	7 1/2x12	8X12	P.T. DOUGLAS FIR SELECT STRUCT.
FLOOR DECKING	5 1/2" THICK	5 1/2" THICK	P.T. EASTERN SPRUCE NO. 1
KNEE BRACING	4x4	4x4	EASTERN HEMLOCK - TAMARACK NO. 1
LOWER LATERAL BRACE	---	4 1/2X4 1/2	DOUGLAS FIR NO. 1
LOWER LATERAL BRACING BEARING BLOCKS	---	VARIES	WHITE OAK NO. 1
RAFTERS	3X4	3X4	EASTERN WHITE PINE NO. 1
RIDGE BEAM	6 1/2x9	8x8 ~~6 1/2x9~~	EASTERN HEMLOCK - TAMARACK NO. 1
RIDGE BEAM POST	6x6	8x8 ~~6x6~~	EASTERN HEMLOCK - TAMARACK NO. 1
ROOF BOARDS	3/4" THICK	1.0 ~~3/4~~" THICK	EASTERN WHITE PINE NO. 1
ROOF BRACE	4x4	4x4	EASTERN HEMLOCK - TAMARACK NO. 1
SIDING	1" THICK	1" THICK	EASTERN WHITE PINE -COMMON- PREMIUM GRADE
SLEEPER BEAM	---	9"x9" THICK	P.T. DOUGLAS FIR SELECT STRUCT.
TRUSS BEARING BLOCK	---	10" WIDE 2" OR 5" THICK	BLACK LOCUST NO. 1
TRUSS CHORD (1+2)	3X11	3X11	DOUGLAS FIR SELECT STRUCT.
TRUSS CHORD (3)	3x10 1/2	3x10 1/2	DOUGLAS FIR SELECT STRUCT.
TRUSS CHORD 4	3x11 1/2	3x11 1/2	DOUGLAS FIR SELECT STRUCT.
TRUSS END POST	6x18	6x18	DOUGLAS FIR SELECT STRUCT.
TRUSS LATTICE	3x10 1/2	3x10 1/2	DOUGLAS FIR SELECT STRUCT.
UPPER LATERAL BRACE	3 3/4x5	3 3/4x5	EASTERN HEMLOCK - TAMARACK NO. 1
WOOD CURB	---	5 1/2x11 1/2	P.T. DOUGLAS FIR NO. 1
WOOD CURB BLOCKING	---	5 1/2x11 1/2	P.T. DOUGLAS FIR NO. 1

HTA consulting engineers
150 Dow Street - Manchester, NH 03101-1227
Tel 603-669-5555 Fax 660-669-468
164 South Winooski Ave. - Burlington, VT 05401
Tel 802-860-1333 Fax 802-860-6499
Web Page: www.hoylehromer.com E-Mail: hqburlvt@hta.com

STATE OF VERMONT
AGENCY OF TRANSPORTATION

Town Of MONTGOMERY	Bridge No. 41
	Log Sta. —
Highway No. 42	Surv. Sta. —
COMSTOCK COVERED BRIDGE	
GENERAL NOTES	
Designed By J.W. ROCKWELL	Drawn By J.D. GEER
Checked By S.T. JAMES — Date 1-2003	Bridge Design Supervisor — Date
PROJECT MONTGOMERY	PROJECT NO. BHO 1448(26)
L.G.C. Info. —	Z.030 AGNT
Bridge Sheet No. 6	Sheet 6 of 18

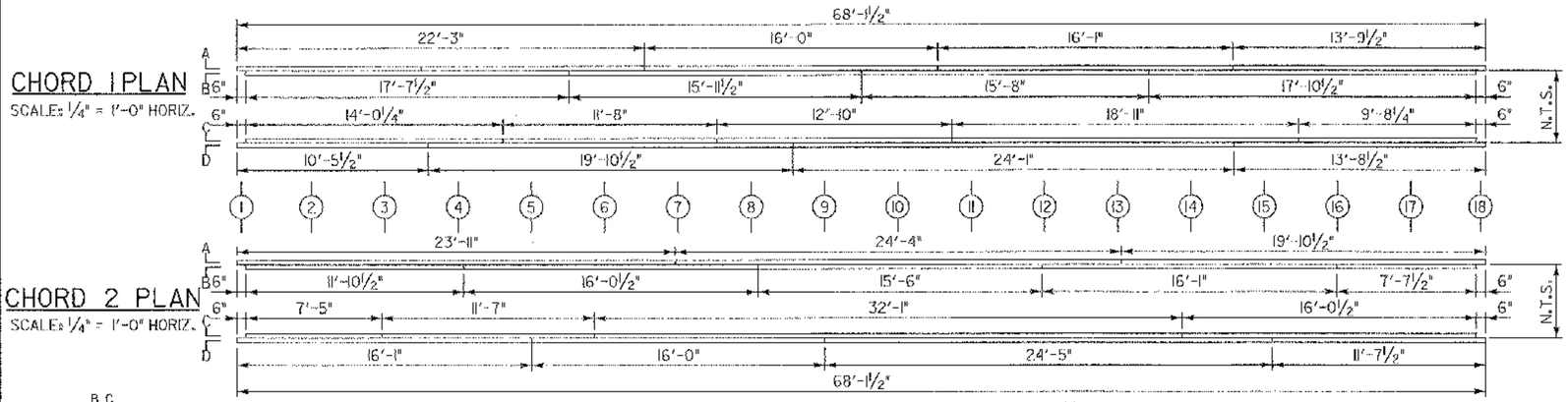

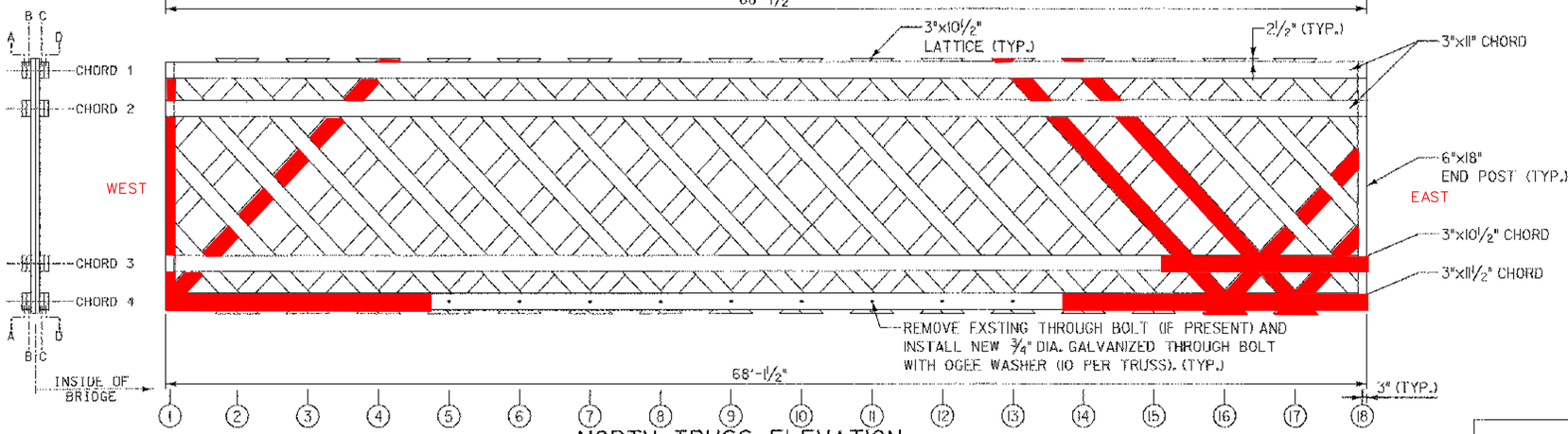

NORTH TRUSS ELEVATION
(LOOKING NORTH)
SCALE: 1/4" = 1'-0"

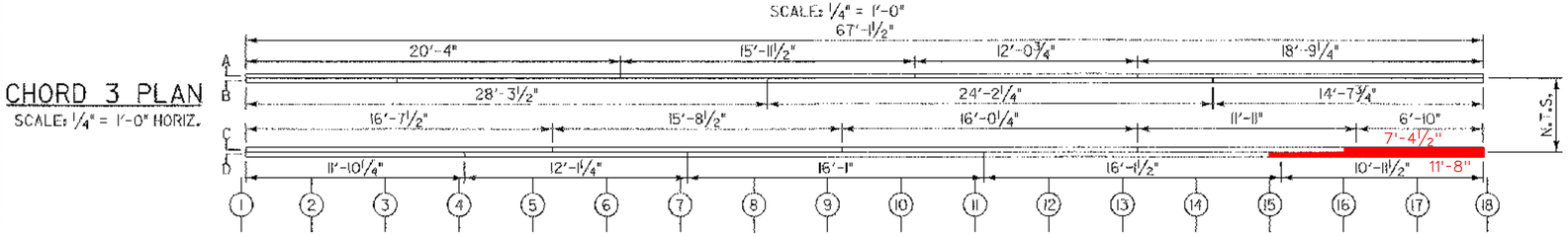

PLAN NOTES:

1. DIMENSIONS SHOWN ARE FOR BIDDING PURPOSE ONLY. ALL DIMENSIONS AND MEMBER SIZES SHOULD BE VERIFIED.
2. TRUSS NODES ARE LOCATED AT THE CENTER OF THE INTERSECTION OF LATTICE MEMBERS AND CHORD 4.
3. SIDING SUPPORTS NOT SHOWN FOR CLARITY.
4. RACKING EXISTS IN TRUSSES. TRUSSES ARE TO BE PLUMMED AND STRAIGHTENED TO VERTICAL.
5. CHORD 3 AND 4 OF BOTH THE NORTH AND SOUTH TRUSS ARE OUT OF ALIGNMENT AND CONTAIN 6" TO 12" OF SWEEP. CHORDS ARE TO BE RETURNED TO THE ORIGINAL STRAIGHT CONDITION.
6. SEE SHEET 8 FOR LATTICE CONNECTION DETAILS. NEW TRUNNEL ORIENTATION TO MATCH EXISTING.
7. SPLICE LOCATIONS IN CHORD 4 ARE APPROXIMATE AND ARE BASED UPON A VISUAL SURVEY.
8. CHORD 4 SHALL BE REMOVED AND LATER REPLACED IN IT'S ENTIRETY FROM EACH TRUSS FOR INSPECTION. THE COST OF THIS WORK WILL BE PAID FOR UNDER ITEM 502.10. THE COST OF TRUNNEL REMOVAL FROM CHORD 4 WILL BE PAID FOR UNDER ITEM 529.20 (MOD.) AND SHALL INCLUDE THE COST OF REDRILLING THE EXISTING HOLE (IF DISTORTED) AND INSTALLING A NEW TRUNNEL BASED ON THE NEW HOLE DIAMETER. IF, IN THE OPINION OF THE RESIDENT ENGINEER, THE EXISTING TRUNNEL AND HOLE ARE ADEQUATE FOR REUSE, THE EXISTING TRUNNELS SHALL BE REUSED. TRUNNEL REMOVAL AND INSTALLATION FOR ALL OTHER CHORD AND LATTICE REPLACEMENT SHALL BE INCIDENTAL TO THAT PAY ITEM.

CAMBER NOTES:

1. ALL VALUES IN CAMBER TABLE ARE MEASURED FROM A REFERENCE LINE THAT IS A STRAIGHT LEVEL LINE CONNECTING POINTS LOCATED AT THE TOP OF CHORD 3. NEGATIVE VALUES INDICATE DOWN DIRECTIONS (SAG).
2. THE TEMPORARY BRIDGE SHORING SHALL BE IN PLACE PRIOR TO THE START OF JACKING OPERATIONS. INSTALLATION OF NEW TRUSS MEMBERS SHALL NOT BEGIN UNTIL JACKING OPERATIONS ARE COMPLETE.
3. DUE TO THE SMALL AMOUNT OF TRUSS MEMBERS REPLACEMENT IT IS NOT ANTICIPATED THAT ADDITIONAL CAMBER CAN BE ADDED TO THE TRUSSES. THE CONTRACTOR SHALL JACK THE BRIDGE TO A MAXIMUM 1 3/4" MIDSPAN CAMBER PRIOR TO REPLACING TRUSS MEMBERS.
4. THE CONTRACTOR SHALL ASSIST THE RESIDENT ENGINEER WITH THE MEASUREMENT OF THE AS BUILT CAMBER.

EXISTING AND AS-BUILT TRUSS CAMBER (INCHES) * +

NODES	(1A)	(1B)	(2A)	~~(2B)~~ MIDDLE	NODES	(1A)	(1B)	(2A)	~~(2B)~~ MIDDLE
1	-------	-------	-------	-------	10	0.88	1.23	3.00	3.48
2	-------	-------	-------	-------	11	0.95	1.32	2.64	3.24
3	0.00	0.00	-------	1.44	12	0.54	0.81	2.28	2.76
4	0.31	0.21	1.92	2.04	13	0.26	0.54	1.92	2.28
5	0.39	0.66	2.40	2.64	14	0.09	0.51	1.44	1.92
6	0.70	0.75	2.88	3.00	15	0.17	0.00	0.96	1.32
7	1.14	1.32	3.00	3.48	16	0.00	------	-------	0.84
8	1.09	1.41	3.03	3.48	17	------	------	-------	-------
9	1.04	1.26	3.12	3.48	18	-------	-------	-------	-------

(1A) EXISTING CAMBER NORTH TRUSS
(1B) EXISTING CAMBER SOUTH TRUSS
(2A) AS-BUILT CAMBER NORTH TRUSS
(2B) AS BUILT CAMBER SOUTH TRUSS

* NEGATIVE VALUES INDICATE SAG
\+ NODES WITHOUT EXISTING CAMBER VALUE WERE NOT ACCESSIBLE AT TIME OF SURVEY.

LEGEND

(1) TRUSS NODE

MEMBER TO BE REPLACED

N.T.S. NOT TO SCALE.

HTA consulting engineers
150 Dow Street - Manchester, NH 03101-2727
Tel 603-669-2223 Fax 603-669-4168
184 South Winooski Ave. - Burlington, VT 05401
Tel 802-860-1131 Fax 802-860-6429
Web Page: www.hoylesterner.com E-Mail: hta@hta-nh.com

STATE OF VERMONT
AGENCY OF TRANSPORTATION

Town Of MONTGOMERY	Bridge No. 41
Highway No. 42	Log Sta. — / Surv. Sta. —
COMSTOCK COVERED BRIDGE	
NORTH TRUSS ELEVATION & CHORD PLAN	
Designed By J.W. ROCKWELL	Drawn By J.D. GEER
Checked By S.T. JAMES / Date 1-2003	Bridge Design Supervisor / Date
PROJECT MONTGOMERY	PROJECT NO. BHO 1448(26)
F.G.C. Info. —	ZJ304TRS1
Bridge Sheet No. 7	Sheet 7 of 18

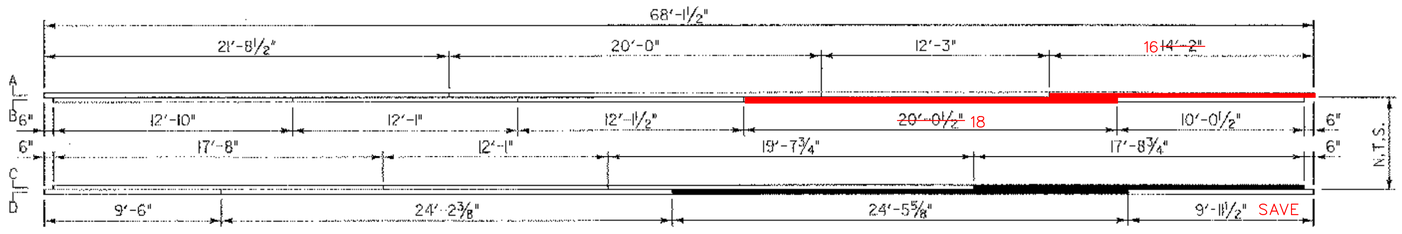

CHORD 1 PLAN

SCALE: ¼" = 1'-0" HORIZ.

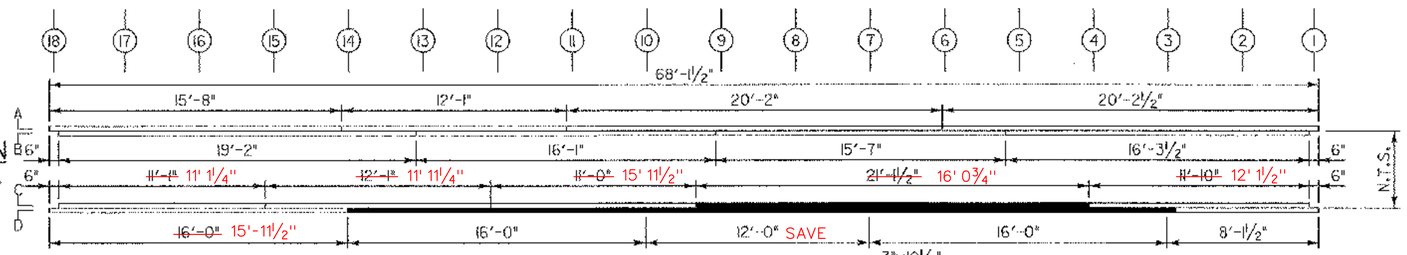

CHORD 2 PLAN

SCALE: ¼" = 1'-0" HORIZ.

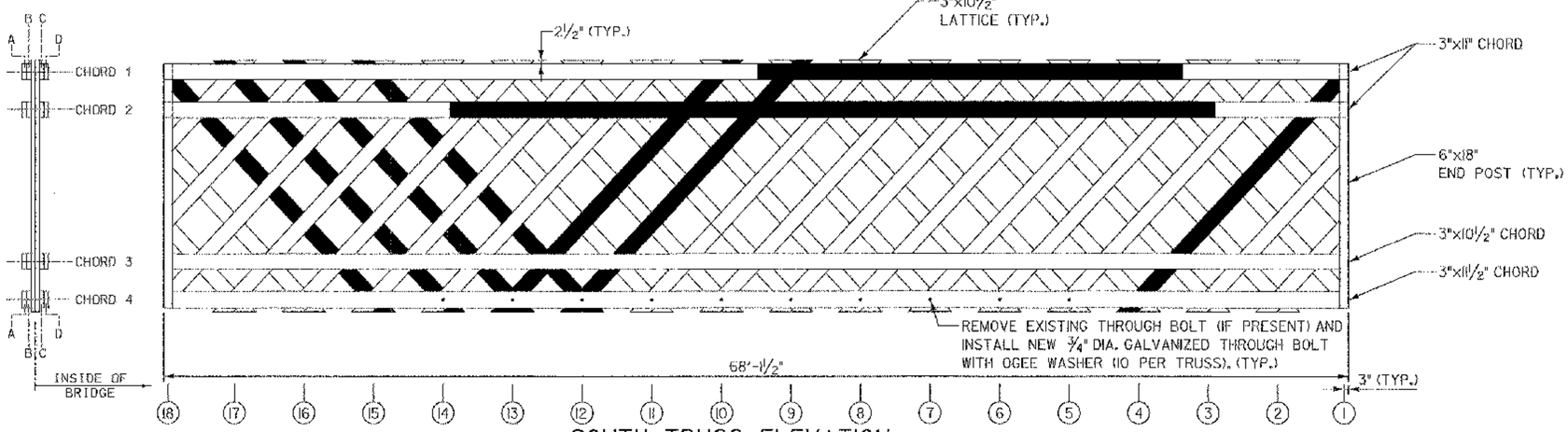

SOUTH TRUSS ELEVATION

(LOOKING SOUTH)

SCALE: ¼" = 1'-0"

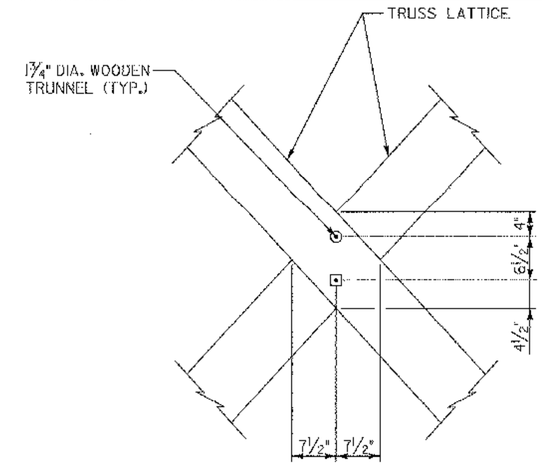

LATTICE TO LATTICE CONNECTION

SCALE: 1" = 1'-0"

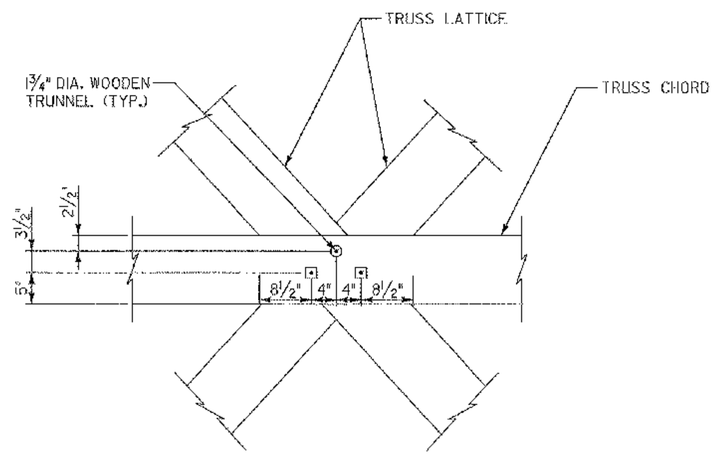

LATTICE TO CHORD CONNECTION

SCALE: 1" = 1'-0"

NOTE: CHORD 3 AND 4 SHOWN, CHORD 1 AND 2 MIRROR IMAGES OF CHORD 3 AND 4. THROUGH BOLTS IN CHORD 4 NOT SHOWN FOR CLARITY.

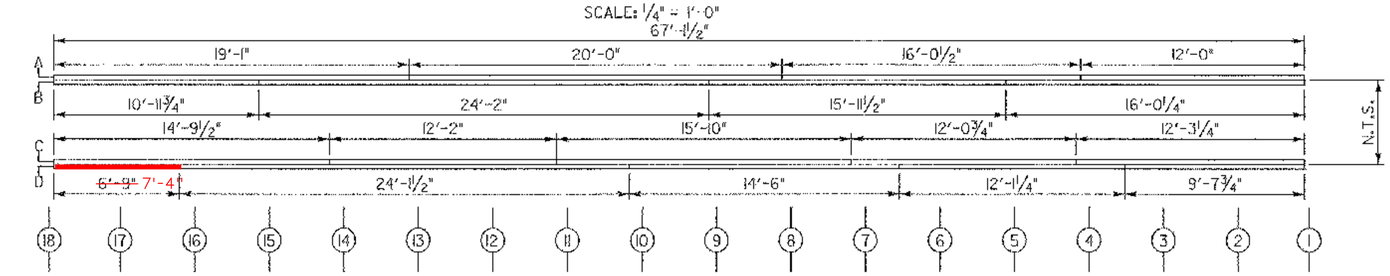

CHORD 3 PLAN

SCALE: ¼" = 1'-0" HORIZ.

CHORD 4 PLAN

SCALE: ¼" = 1'-0" HORIZ.

PLAN NOTES:

1. SEE SHEET 7 FOR NOTES THAT APPLY TO THIS SHEET.

LEGEND

- (1) TRUSS NODE
- ■ MEMBER TO BE REPLACED
- N.T.S. NOT TO SCALE
- WOODEN TRUNNEL HEAD
- END OF TRUNNEL

HTA consulting engineers
150 Dow Street - Manchester, NH 03101-1227
Tel 603-669-5555 Fax 603-669-4018
164 South Winooski Ave. - Burlington, VT 05401
Tel 802-860-1331 Fax 802-860-6495
Web Page: www.hoylebernar.com E-Mail: hta@hta-nh.com

STATE OF VERMONT
AGENCY OF TRANSPORTATION

Town Of MONTGOMERY	Bridge No. 41
Highway No. 42	Log Sta. —
	Surv. Sta. —
COMSTOCK COVERED BRIDGE	
SOUTH TRUSS ELEVATION & CHORD PLAN	
Designed By J.W. ROCKWELL	Drawn By J.D. GEER
Checked By S.T. JAMES — Date 1-2003	Bridge Design Supervisor — Date
PROJECT MONTGOMERY	PROJECT NO. BHO 1448(26)
L.C.C. Info. —	ZJ304TRS2
Bridge Sheet No. 8	Sheet 8 of 18

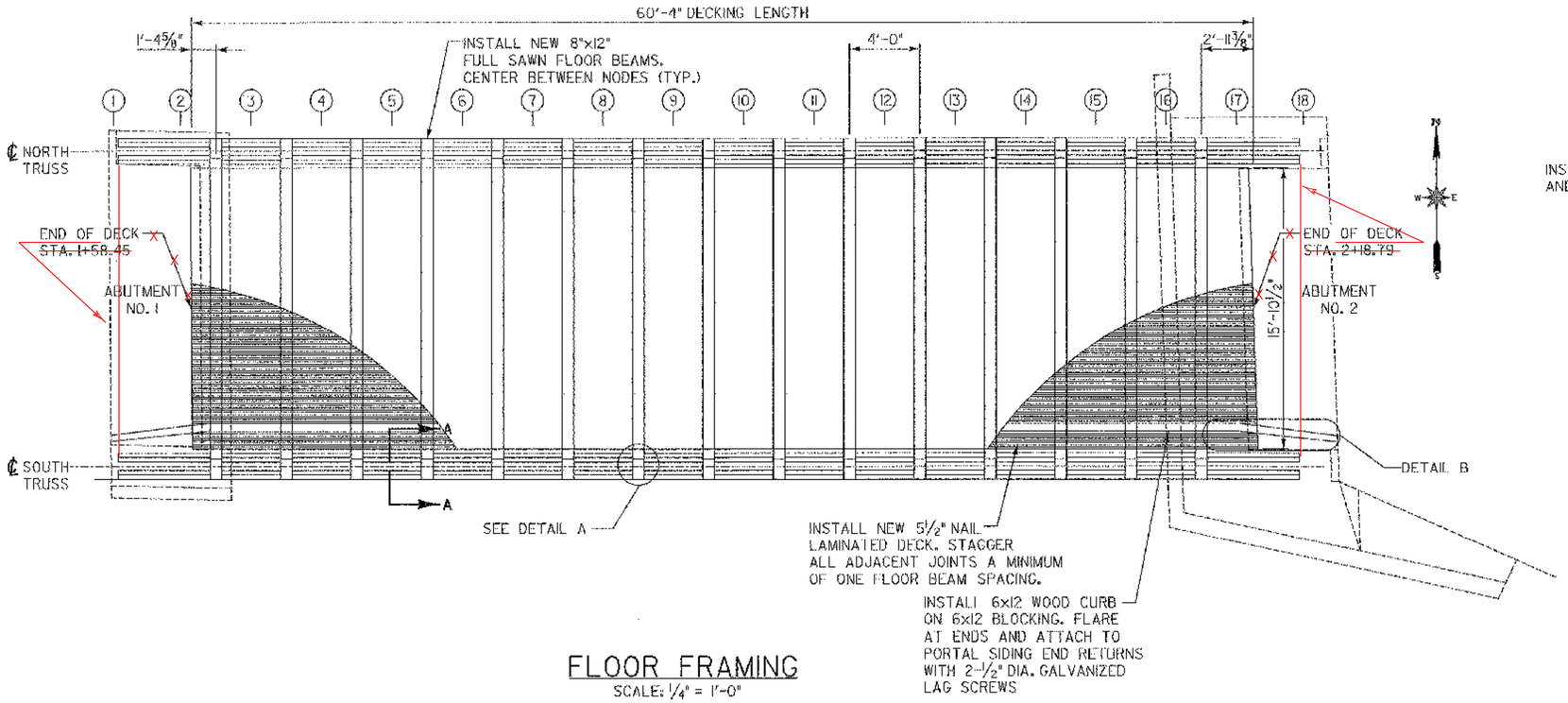

FLOOR FRAMING

SCALE: 1/4" = 1'-0"

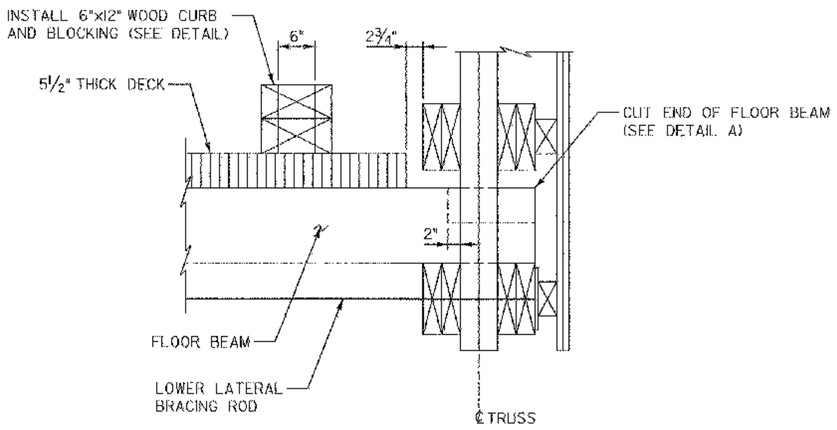

SECTION A-A

SCALE: 1" = 1'-0"

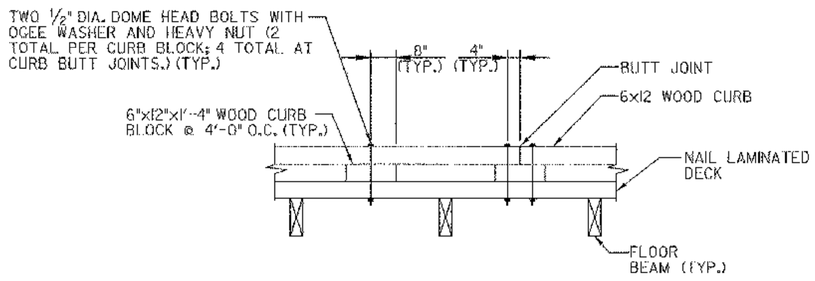

CURB ATTACHMENT DETAIL

SCALE: 1/2" = 1'-0"

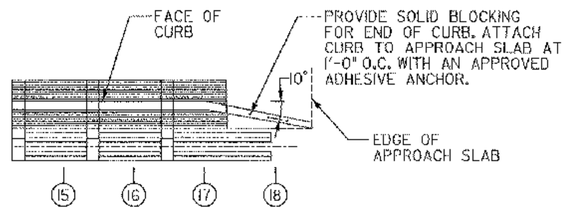

DETAIL B

SCALE: 1/4" = 1'-0"

PLAN NOTES:

1. REMOVE THE EXISTING FLOOR BEAMS, DECKING AND LONGITUDINAL FLOOR BEAM SUPPORTS IN THEIR ENTIRETY AND REPLACE AS DETAILED ON THIS SHEET.
2. CHORD 4 OF EACH TRUSS AND ALL TRUNNELS THROUGH IT SHALL BE REMOVED IN THEIR ENTIRETY TO FACILITATE MEMBER INSPECTION AND NEW FLOOR BEAM INSTALLATION.
3. SEE SPECIFICATIONS FOR NAIL LAMINATED DECKING DETAILS.

LEGEND

(1) TRUSS NODE

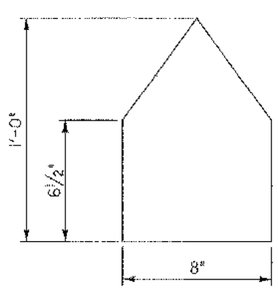

DETAIL A

SCALE: 3" = 1'-0"

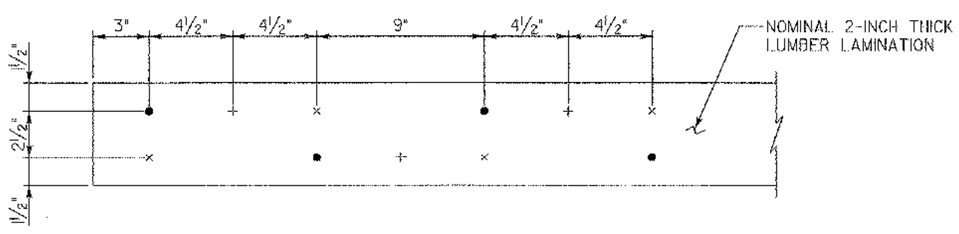

● INDICATES NAILS IN FIRST LAMINATION
+ INDICATES NAILS IN SECOND LAMINATION
× INDICATES NAILS IN THIRD LAMINATION

DECK NAILING PATTERN

SCALE: 3" = 1'-0"

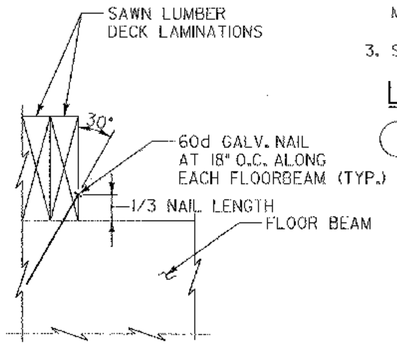

DECK ATTACHMENT DETAIL

SCALE: 3" = 1'-0"

HTA consulting engineers
150 Dow Street - Manchester, NH 03101-2227
Tel 603-669-3555 Fax 603-669-8118
184 South Winooski Ave. - Burlington, VT 05401
Tel 802-860-1331 Fax 802-860-6499
Web Page: www.hoyletarzia.com E-Mail: hta@hta-eng.com

STATE OF VERMONT
AGENCY OF TRANSPORTATION

Town Of MONTGOMERY	Bridge No. 41
Highway No. 42	Log Sta. — / Surv. Sta. —
COMSTOCK COVERED BRIDGE	
FLOOR FRAMING PLAN	
Designed By J.W. ROCKWELL	Drawn By J.D. GEER
Checked By S.T. JAMES — Date 1-2003	Bridge Design Supervisor — Date
PROJECT MONTGOMERY	PROJECT NO. BHO 1448(26)
I.G.C. Info. —	ZJ304FFP
Bridge Sheet No. 9	Sheet 9 of 18

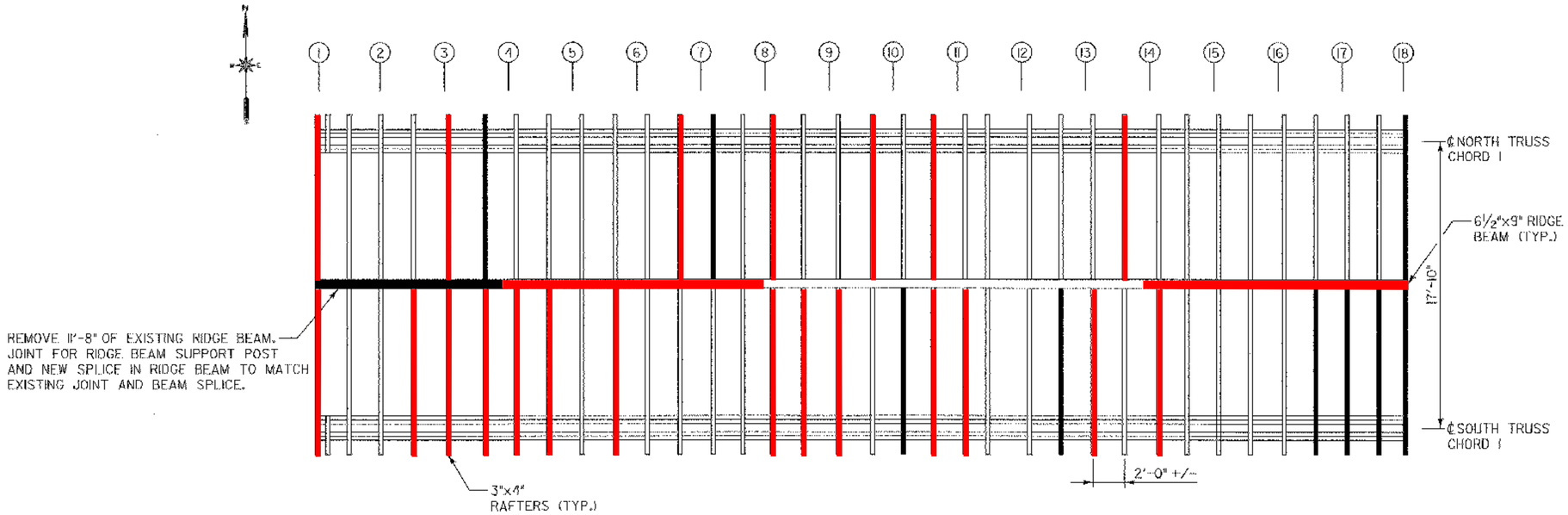

ROOF FRAMING PLAN

SCALE: ¼" = 1'-0"

NOTE: ROOF BOARDS AND METAL ROOF NOT SHOWN FOR CLARITY

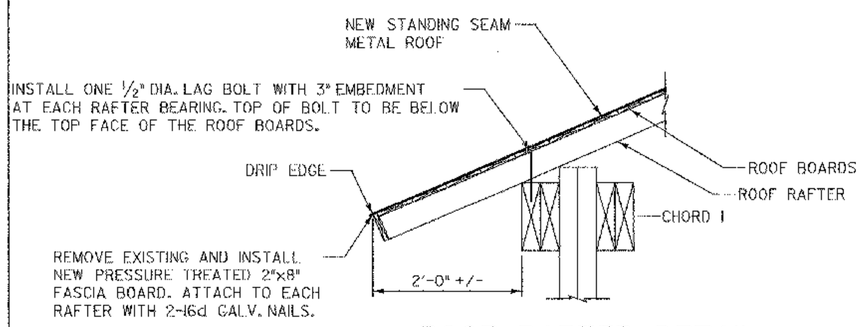

ROOF RAFTER DETAIL

SCALE: 1" = 1'-0"

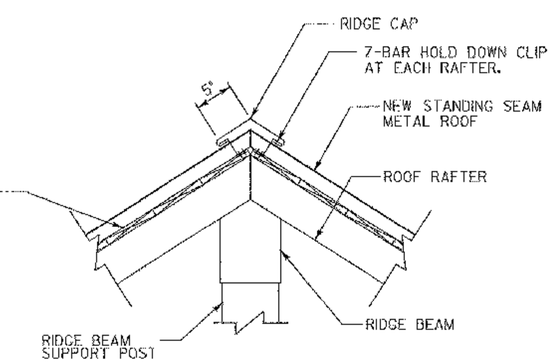

ROOF RIDGE CAP DETAIL

SCALE 1½" = 1'-0"

PLAN NOTES:

1. ITEM 522.20 STRUCTURAL LUMBER & TIMBER - UNTREATED (RAFTERS AND KNEE BRACES) ASSUMES REMOVAL OF 3 ADDITIONAL RAFTERS FOR BIDDING PURPOSES THAT HAVE NOT BEEN IDENTIFIED IN THE ROOF FRAMING PLAN. THE CONTRACTOR AND RESIDENT ENGINEER SHALL JOINTLY INSPECT ALL ROOF RAFTERS AFTER REMOVAL OF THE EXISTING METAL ROOF. ATTACH EACH RAFTER TO CHORD 4 WITH ONE ½" DIA. LAG BOLT AS DETAILED ON THIS SHEET.
2. ITEM 522.20 STRUCTURAL LUMBER & TIMBER - UNTREATED ASSUMES REMOVAL OF 10 PERCENT OF THE EXISTING ROOF BOARDS FOR BIDDING PURPOSES. SPECIFIC ROOF BOARDS HAVE NOT BEEN IDENTIFIED IN THE ROOF FRAMING PLAN. THE CONTRACTOR AND RESIDENT ENGINEER SHALL JOINTLY INSPECT ALL ROOF BOARDS AFTER REMOVAL OF THE EXISTING METAL ROOF. ATTACH ROOF BOARDS TO EACH RAFTER WITH 2-3" GALV. SCREWS.
3. THE REMOVAL AND REINSTALLATION OF ROOF BOARDS TO FACILITATE REPLACEMENT OF ROOF RAFTERS SHALL BE CONSIDERED SUBSIDIARY TO ITEM 522.20 STRUCTURAL LUMBER & TIMBER - UNTREATED (RAFTERS AND KNEE BRACES).

LEGEND:

(1) TRUSS NODE

MEMBER TO BE REPLACED

HTA consulting engineers
150 Dow Street - Manchester, NH 03101-2127
Tel 603-669-5555 Fax 603-669-1658
184 South Winooski Ave. - Burlington, VT 05401
Tel 802-861-1331 Fax 802-860-6499
Web Page: www.htaylortanner.com E-Mail: hta@htaylortanner.com

STATE OF VERMONT
AGENCY OF TRANSPORTATION

Town Of MONTGOMERY	Bridge No. 41
Highway No. 42	Log Sta. — / Surv. Sta. —
COMSTOCK COVERED BRIDGE	
ROOF FRAMING PLAN	
Designed By J.W. ROCKWELL	Drawn By J.D. GEER
Checked By S.T. JAMES / Date 1-2003	Bridge Design Supervisor / Date
PROJECT MONTGOMERY	PROJECT NO. BHO 1448(26)
I.G.C. Info. —	ZJ304RFP
Bridge Sheet No. 10	Sheet 10 of 18

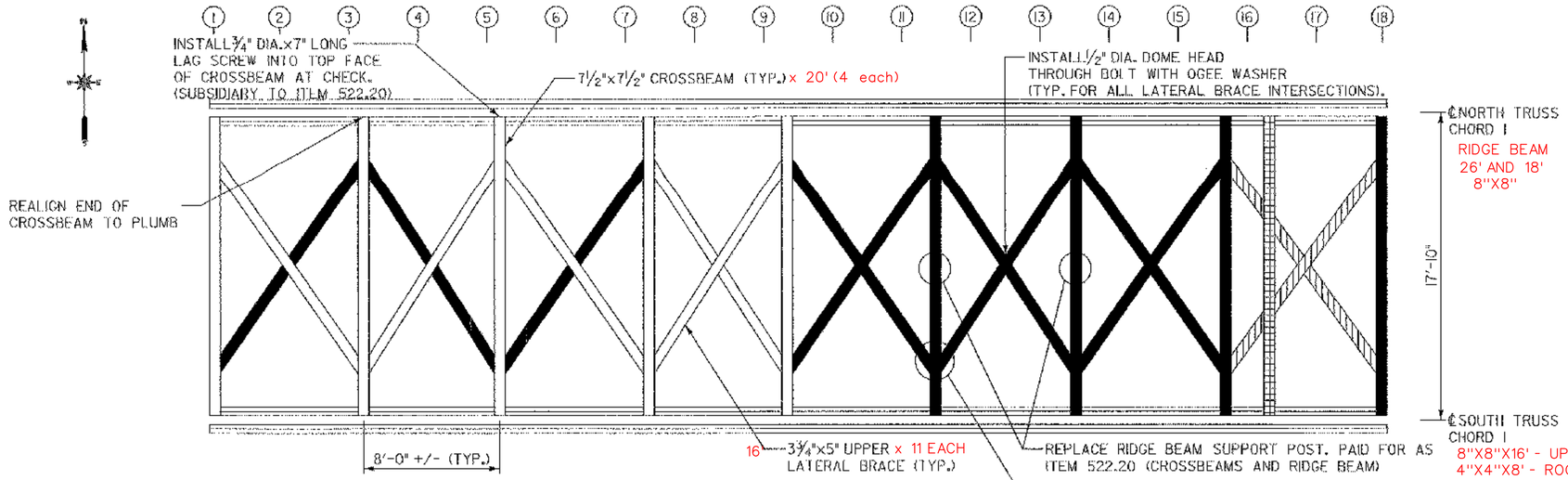

NOTE: RAFTERS AND ROOF BOARDS NOT SHOWN FOR CLARITY.

UPPER LATERAL BRACING

SCALE: ¼" = 1'-0"

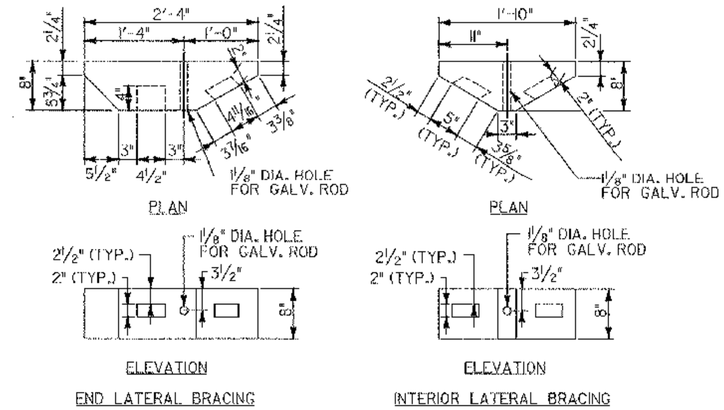

BEARING BLOCK DETAIL

SCALE: 1" = 1'-0"

NOTE: ADJUST DIMENSIONS IN CENTER BRACING PANEL TO MEET BRACING ANGLE.

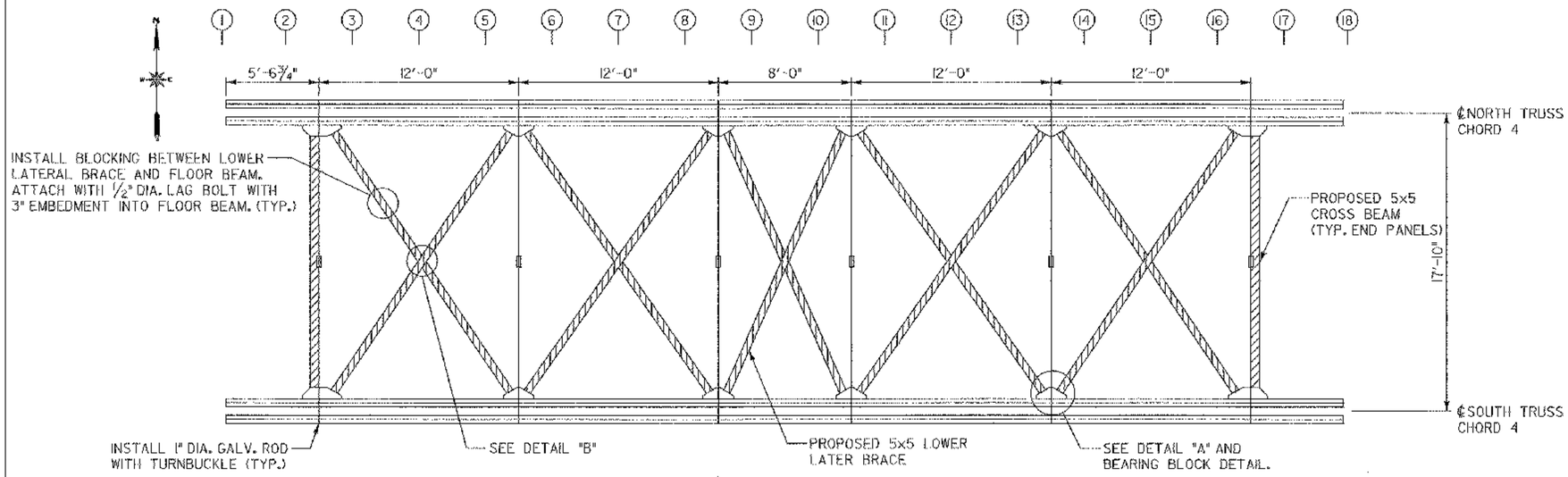

NOTE: FLOOR BEAMS AND DECKING NOT SHOWN FOR CLARITY.

LOWER LATERAL BRACING

SCALE: ¼" = 1'-0"

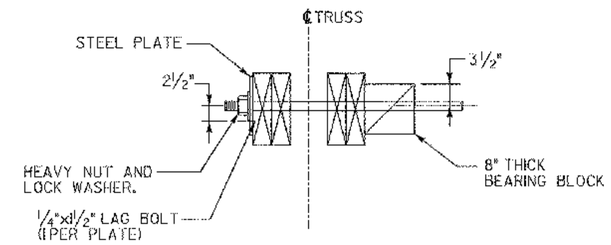

SECTION A-A

SCALE: 1" = 1'-0"

PLAN NOTES:

1. ALL 8" BEARING BLOCKS SHALL BE WHITE OAK NO. 1
2. THE UPPER LATERAL BRACE TENONS SHALL BE 3" IN DEPTH AND CENTERED VERTICALLY ON THE CROSSBEAM. SEE DETAIL "C" FOR JOINT DETAIL.
3. ITEM 522.20 STRUCTURAL LUMBER & TIMBER - UNTREATED (RAFTER AND KNEES BRACES) ASSUMES REMOVAL OF 6 KNEE BRACES) FOR BIDDING PURPOSES. SPECIFIC KNEES BRACES HAVE NOT BEEN INDENTIFIED IN THE ROOF FRAMING PLAN. THE CONTRACTOR AND RESIDENT ENGINEER SHALL JOINTLY INSPECT ALL KNEE BRACES PRIOR TO REPLACEMENT.

LEGEND

- ① TRUSS NODE
- MEMBER TO BE REPLACED
- MEMBER TO BE REMOVED
- MEMBER TO BE ADDED

HTA consulting engineers
150 Dow Street - Manchester, NH 03101-1227
Tel 603-669-5555 Fax 603-669-1018
184 South Winooski Ave. - Burlington, VT 05401
Tel 802-863-5511 Fax 802-863-6459
Web Pages www.hoyletranner.com I-Mail: hta@hoyletranner.com

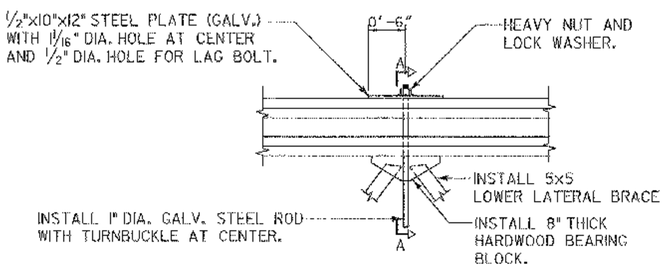

DETAIL 'A'

SCALE: ½" = 1'-0"

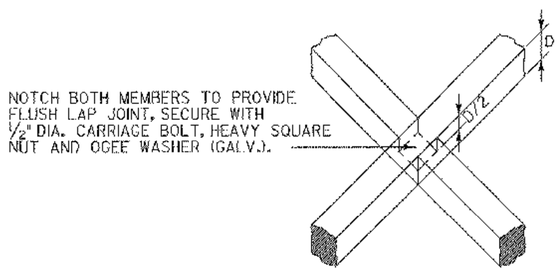

DETAIL 'B'

SCALE: ¾" = 1'-0"

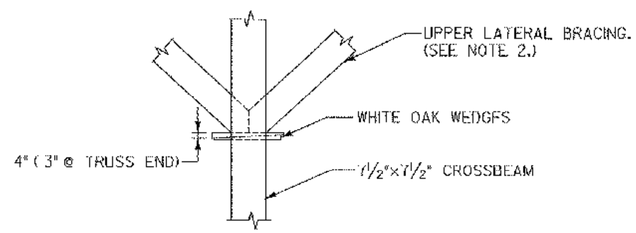

DETAIL 'C'

SCALE: ¾" = 1'-0"

STATE OF VERMONT
AGENCY OF TRANSPORTATION

Town Of MONTGOMERY	Bridge No. 41
Highway No. 42	Log Sta. -- / Surv. Sta. --
COMSTOCK COVERED BRIDGE	
UPPER & LOWER LATERAL BRACING PLAN	
Designed By J.W. ROCKWELL	Drawn By J.D. GEER
Checked By S.T. JAMES / Date 1-2003	Bridge Design Supervisor / Date
PROJECT MONTGOMERY	PROJECT NO. BHO 1448(26)
I.C.C. Info. --	Z1304ULB
Bridge Sheet No. 11	Sheet 11 of 18

PLAN NOTES:

1. APPLY APPROVED WATER REPELLANT TO ALL EXPOSED CONCRETE SURFACES.
2. ALL CONCRETE SHOWN WITH THE EXCEPTION OF THE LIMITS OF RECONSTRUCTION IS EXISTING.
3. SEE SHEET 14 FOR ABUTMENT DETAILS THAT APPLY TO THIS SHEET.
4. REMOVE VEGETATION FROM STONE PORTION OF ABUTMENT AND WINGWALLS. (SUBSIDIARY TO ITEM 602.30).
5. RECONSTRUCTION OF THE SOUTHWEST CORNER OF THE CONCRETE CAP SHALL INCLUDE SAW CUTTING TO REMOVE DETERIORATED CONCRETE FULL DEPTH AND WIDTH AS SHOWN AND REPLACING IT WITH HIGH PERFORMANCE CONCRETE CLASS B. DIMENSIONS SHOW LIMITS FOR BIDDING PURPOSES ONLY.
6. ALL NEW CONCRETE SHALL BE HIGH PERFORMANCE CLASS B CONCRETE.
7. BAR MARKS FOR APPROACH SLAB RECONSTRUCTION ARE FOR ABUTMENT NO. 1 WITH BAR MARKS FOR APPROACH SLAB NO. 2 IN PARENTHESIS.
8. APPROACH SLAB DIMENSIONS ARE APPROXIMATE DUE TO BITUMINOUS CONCRETE TOPPING. CONTRACTOR SHALL CONFIRM THE WIDTH (SHORT DIMENSION) OF THE APPROACH SLAB PRIOR TO ORDERING REINFORCING STEEL.

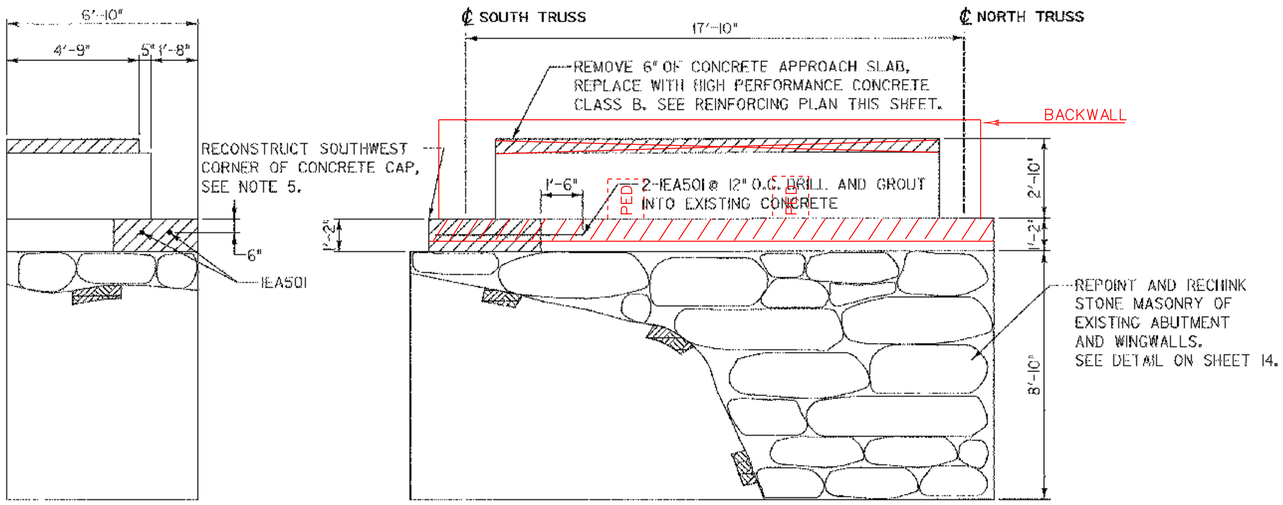

WINGWALL NO. 2

ABUTMENT NO. 1 ELEVATION

SCALE: 3/8" = 1'-0"

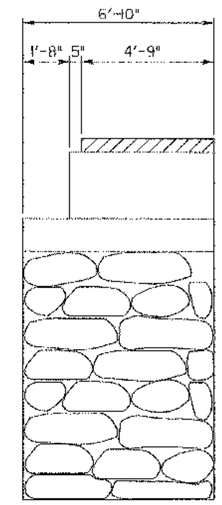

WINGWALL NO. 1

REFER TO COMPUTATION FOLDER

- CONCRETE-

BUILT W/BACKWALL AND PEDESTALS

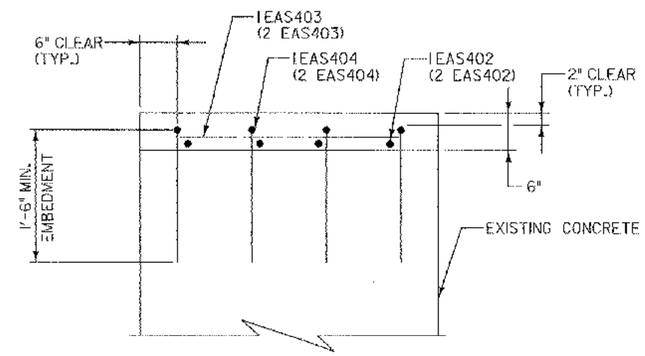

SECTION A-A

SCALE: 1" = 1'-0"

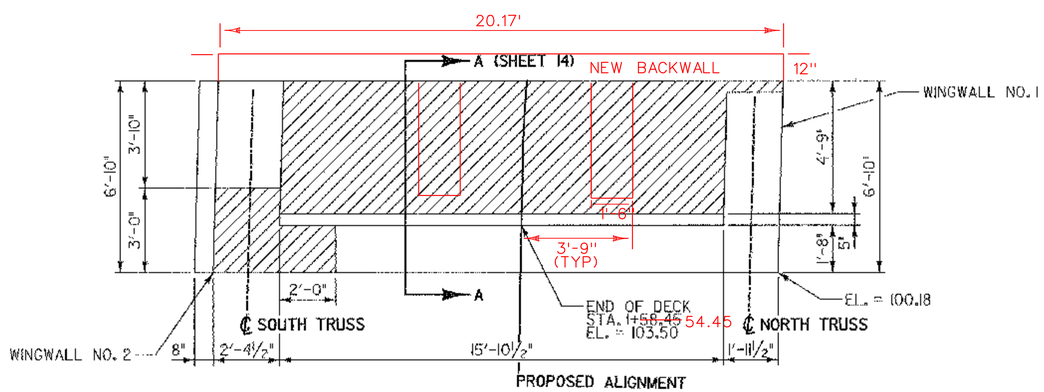

ABUTMENT NO. 1 PLAN

SCALE: 3/8" = 1'-0"

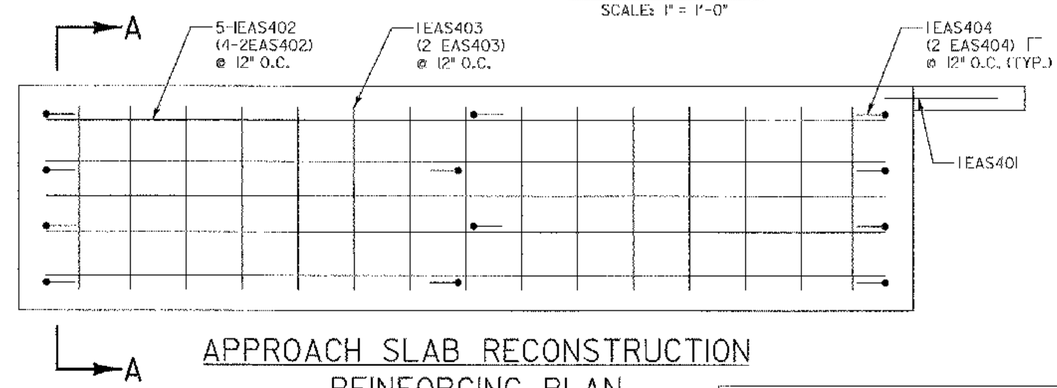

APPROACH SLAB RECONSTRUCTION REINFORCING PLAN

SCALE: 3/4" = 1'-0"

LEGEND:

PROPOSED CONCRETE REPAIR

LEDGE

HTA consulting engineers
150 Dow Street - Manchester, NH 03101-1227
Tel 603-669-5555 Fax 603-669-4189
184 South Winooski Ave. - Burlington, VT 05401
Tel 802-860-1331 Fax 802-860-5499
Web Page: www.hoylestarner.com E-Mail: hq@hta-nh.com

STATE OF VERMONT
AGENCY OF TRANSPORTATION

Town Of MONTGOMERY	Bridge No. 41
Highway No. 42	Log Sta. — / Surv. Sta. —
COMSTOCK COVERED BRIDGE	
ABUTMENT NO. 1 PLAN & ELEVATION	
Designed By J.W. ROCKWELL	Drawn By J.D. GEER
Checked By S.T. JAMES — Date 1-2003	Bridge Design Supervisor — Date
PROJECT MONTGOMERY	PROJECT NO. BHO 1448(26)
I.C.C. Info. —	ZJ304A81
Bridge Sheet No. 12	Sheet 12 of 18

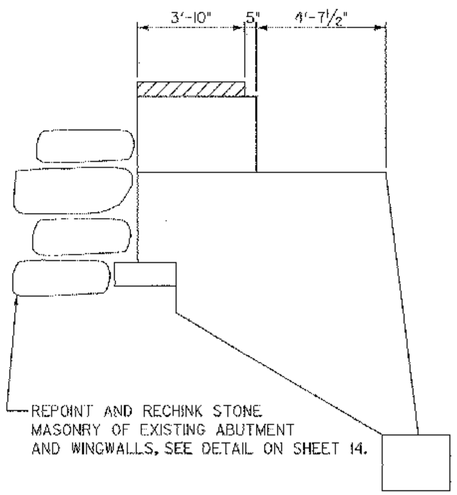

WINGWALL NO. 3

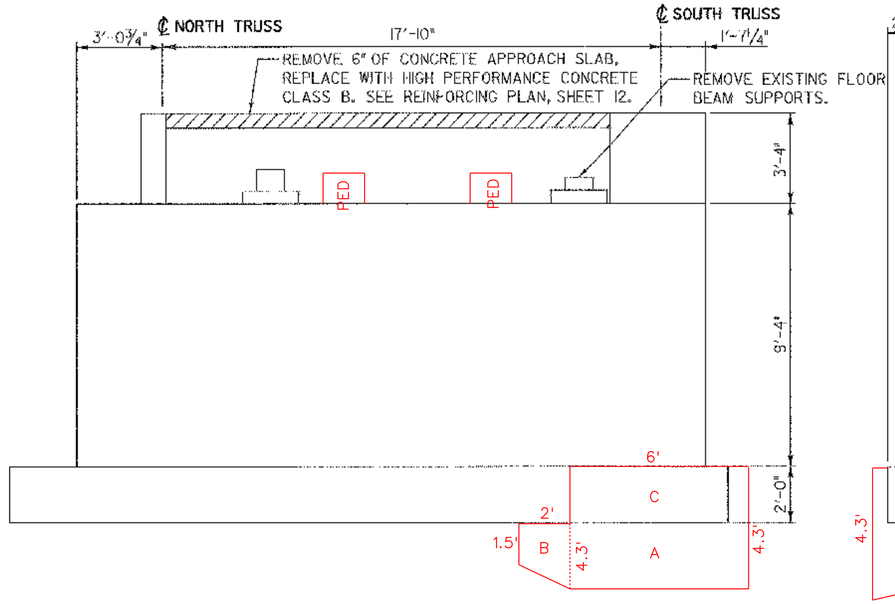

ABUTMENT NO. 2 ELEVATION

SCALE: ⅜" = 1'-0"

A= 6X2.3X3.0 = 41.4
B= 2X2.9(AVE.)X3.0 = 17.4
C= 17.4X0.5X2.0 = 17.4
D= 3.4X2.05X0.5 = 3.5
E= 4X1.55X3.0 = 18.6
F= 4X0.65X2.0 = 5.2
103.5÷3.83 CY

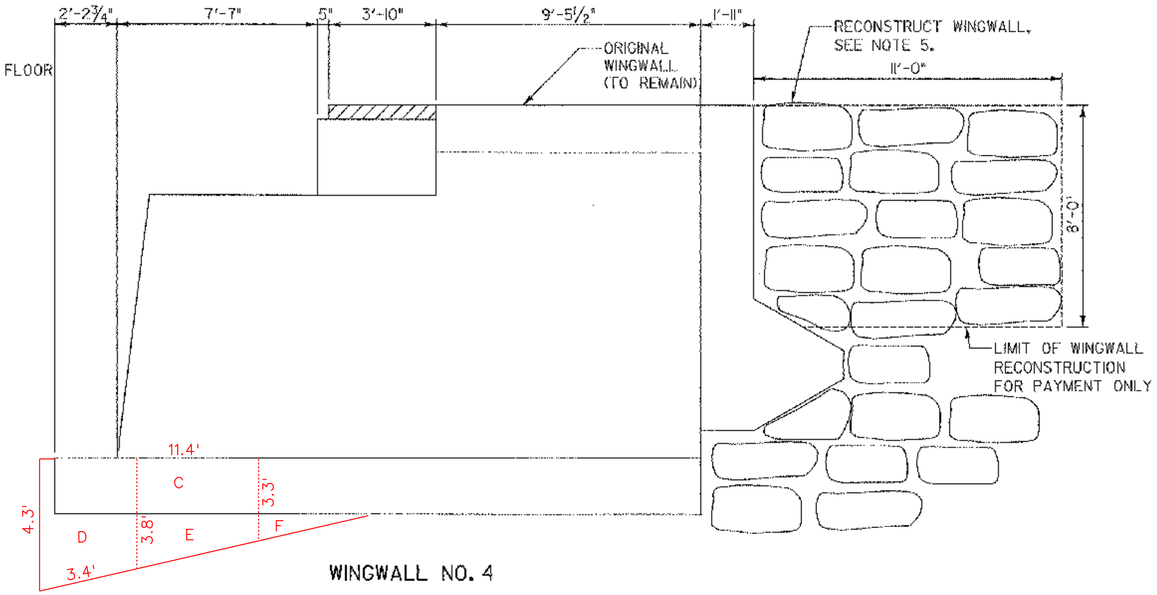

WINGWALL NO. 4

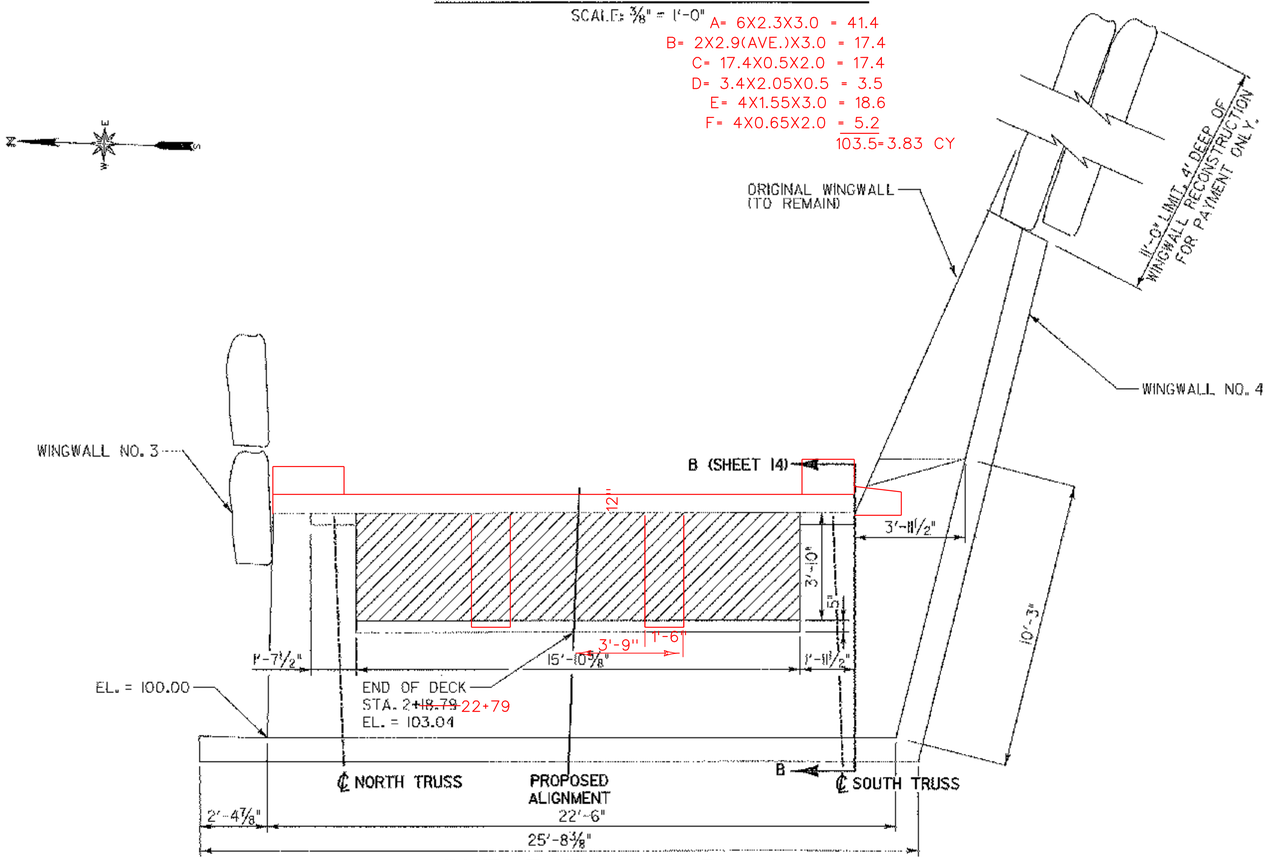

ABUTMENT NO. 2 PLAN

SCALE: ⅜" = 1'-0"

PLAN NOTES:

1. SEE SHEETS 12 AND 14 FOR ABUTMENT DETAILS THAT APPLY TO THIS SHEET.
2. ALL CONCRETE SHOWN WITH THE EXCEPTION OF THE LIMITS OF REPAIR IS EXISTING.
3. APPLY APPROVED WATER REPELLANT TO ALL EXPOSED CONCRETE SURFACES.
4. REMOVE ALL VEGETATION AND ACCUMULATED DIRT FROM ABUTMENT AND WINGWALLS (SUBSIDIARY TO ITEM 602.30).
5. RECONSTRUCTION OF WINGWALL NO. 4 UNDER ITEM 602.20 (MOD.) SHALL INCLUDE RESETTING OF STONES AND THE ADDITION OF SIMILAR STONES AS REQUIRED TO RETURN THE WALL TO IT'S ORIGINAL PLUMB AND TRUE CONDITION. THIS WORK SHALL ALSO INCLUDE ADDING ONE NEW LEVEL OF STONE ALONG THE TOP OF WINGWALL. NEW STONES TO MATCH EXISTING IN APPEARANCE AND SHALL NOT BE LESS THAN 2'x2'x4' IN SIZE. NEW STONES SHALL BE CHINKED FOR GOOD BEARING. REMOVAL OF FILL BEHIND THE WINGWALL WILL BE PAID FOR UNDER ITEM 204.20

LEGEND

PROPOSED CONCRETE REPAIR

HTA consulting engineers
150 Dow Street – Manchester, NH 03101-1227
Tel 603-669-5555 Fax 603-669-8608
184 South Winooski Ave. – Burlington, VT 05401
Tel 802-860-1331 Fax 802-860-6099
Web Page: www.lloydstarmer.com E-Mail: hta@hta-nh.com

STATE OF VERMONT
AGENCY OF TRANSPORTATION

Town Of MONTGOMERY	Bridge No. 41
Highway No. 42	Log Sta. -- / Surv. Sta. --
COMSTOCK COVERED BRIDGE	
ABUTMENT NO.2 PLAN & ELEVATION	
Designed By J.W.ROCKWELL	Drawn By J.D.GEER
Checked By S.T.JAMES — Date 1-2003	Bridge Design Supervisor — Date
PROJECT MONTGOMERY	PROJECT NO. BHO 1448(26)
I.G.C. Info. —	Z/304AB2
Bridge Sheet No. 13	Sheet 13 of 18