STATE OF VERMONT
AGENCY OF TRANSPORTATION

PROPOSED IMPROVEMENT
BRIDGE PROJECT
TOWN OF CHESTER
COUNTY OF WINDSOR
CHURCH ST. (TH 5), BRIDGE NO 11

INDEX OF SHEETS

1. TITLE SHEET
2. PRELIMINARY INFORMATION SHEET
3. QUANTITY SHEET
4. TIE SHEET
5. PLAN SHEET
6. PROFILE
7. TRAFFIC CONTROL SHEET
8. PLAN AND ELEVATION
9. EROSION CONTROL SHEET
10. CONSTRUCTION NOTES AND DETAILS
11. DECK DETAILS
12. DECK REINFORCEMENT
13. CURTAIN WALL DETAILS
14. FRAMING PLAN & DETAILS
15. BEAM ELEVATION & DETAILS
16. BEARING DETAILS
17. ABUTMENT DETAILS
18. WINGWALLS DETAILS
19. PIER DETAILS
20. REINFORCING STEEL SCHEDULE
21-22. ROADWAY CROSS SECTIONS

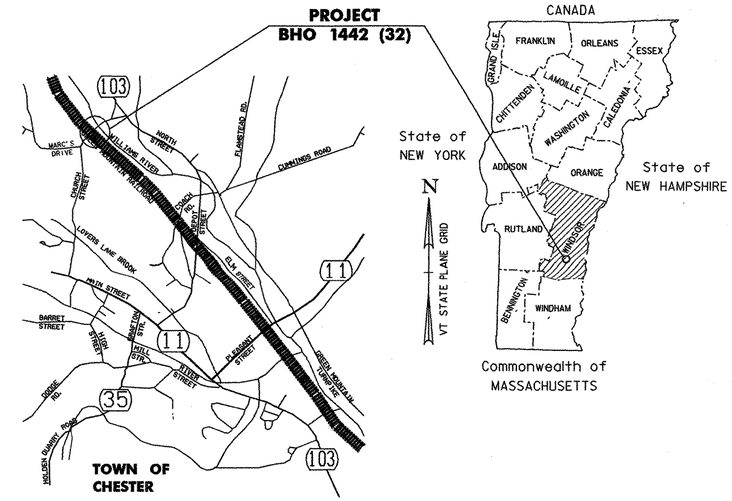

LOCATION MAP

PROJECT LOCATION: BEGINNING AT A POINT ON CHURCH STREET (TH 5) APPROXIMATELY 0.15 MILES WEST OF THE JUNCTION OF VT 103 AND CHURCH STREET AND EXTENDING EASTERLY ALONG CHURCH STREET (TH 5) FOR 0.033 MILES.

PROJECT DESCRIPTION: REMOVAL OF EXISTING CONCRETE DECK, STEEL BEAMS AND BEARINGS; CONSTRUCTION OF NEW STEEL BEAM AND CAST-IN-PLACE CONCRETE DECK SUPERSTRUCTURE ON EXISTING SUBSTRUCTURES; AND RELATED APPROACH WORK.

LENGTH OF STRUCTURE :	116 FEET	=	0.022 MILES
LENGTH OF ROADWAY :	60 FEET	=	0.011 MILES
LENGTH OF PROJECT :	176 FEET	=	0.033 MILES

STANDARDS

B-5	SLOPE GRADING, EMBANKMENTS (EARTH & ROCK), MUCK EXCAVATION	06-01-94
E-100	CONSTRUCTION APPROACH SIGNS	01-02-04
E-101	CONSTRUCTION SIGN DETAILS	05-30-03
E-102	CONSTRUCTION SIGN DETAILS	05-30-03
E-102A	CONSTRUCTION SIGN DETAILS	08-08-95
E-103	MAINLINE TRAFFIC CONTROL DIVIDED HIGHWAY, ONE LANE CLOSED	09-23-98
E-106	TRAFFIC CONTROL - MISCELLANEOUS DETAILS	08-08-95
E-107	DELINEATION, BARRICADES AND DETOURS FOR CONSTRUCTION AREAS	06-30-03
E-107A	BREAKAWAY BARRICADE DETAILS	08-08-95
E-108	CONSTRUCTION ZONE - LONGITUDINAL DROP OFFS	08-18-95
E-110	MAJOR MAINTENANCE OPERATION LANE CLOSURE	08-08-95
E-121	STANDARD SIGN PLACEMENT - CONVENTIONAL ROADS	08-08-95
E-160	FLANGED CHANNEL STEEL SIGN POST	05-20-99
G-1	STEEL BEAM GUARDRAIL W/ STEEL AND WOOD POSTS	01-03-00
G-1D	STEEL BEAM GUARDRAIL APPROACH END TERMINAL, HEAVY DUTY STEEL BEAM GUARDRAIL, STEEL BEAM GUARDRAIL TRAILING END TERMINAL, STEEL BEAM MEDIAN BARRIER, ANCHOR FOR STEEL BEAM RAIL	01-03-00
G-18	PRECAST CONCRETE TEMPORARY TRAFFIC BARRIER	06-01-94
SB-R6-82	BRIDGE RAILING HEAVY DUTY STEEL BEAM	01-06-95
SB-R7-90	BRIDGE RAILING HEAVY DUTY STEEL BEAM	01-11-95
T-1	TEMPORARY EROSION CONTROL DETAILS	06-01-94
T-2	TEMPORARY EROSION CONTROL DETAILS	06-01-94

RECORD PLANS

CONTRACTOR: FW WHITCOMB CONSTRUCTION CORP. – WALPOLE, NH

RESIDENT ENGINEER: WILL STODDARD

CONSTRUCTION BEGAN: MAY 26, 2004

CONSTRUCTION COMPLETE: NOVEMBER 19, 2004

RECORD PLANS BY: WILL STODDARD & N. GARBACIK

I HEREBY CERTIFY THAT ALL THE CONSTUCTION REQUIRED BY THIS SET OF DRAWINGS HAS BEEN ACCOMPLISHED AS INDICATED HEREIN.

BY _____ RESIDENT ENGINEER

DATE 10-30-06

NOTE: Any further information concerning final quantities, amounts or other details relative to this project may be found at Central Files in the electronic archives.

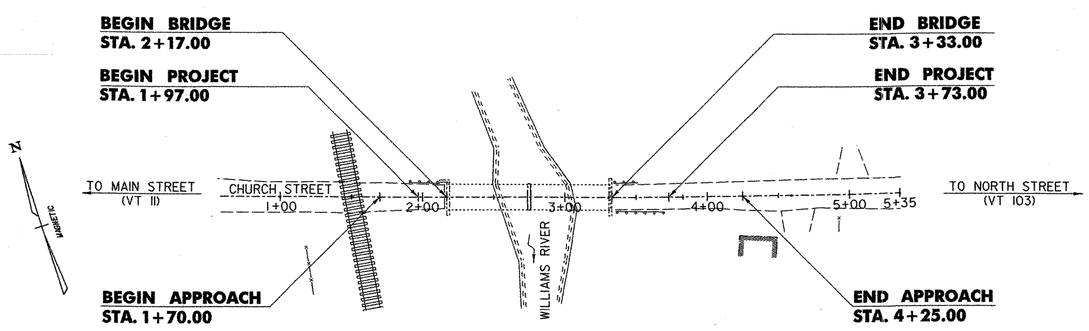

CONVENTIONAL SYMBOLS

COUNTY LINE
TOWN LINE
LIMITS OF ACCESS
POINT OF ACCESS
FENCE LINE
STONE WALL
TRAVELED WAY
GUARD RAIL
RAILROAD
SURVEY LINE
CULVERT
POWER POLE
TELEPHONE POLE
TREES
CONTROL OF ACCESS
PROPERTY LINE
R.O.W. TAKING LINE
SLOPE RIGHTS
TOP OF CUT
TOE OF SLOPE

SURVEYED BY : DUBOIS & KING
SURVEYED DATE : 12/99

DATUM
VERTICAL LOCATION
HORIZONTAL LOCATION

PLANS PREPARED BY:
DuBois & King inc.
ENGINEERING PLANNING MANAGEMENT DEVELOPMENT

GRAPHIC SCALE (IN FEET)
50 0 50 100 150 200

STATE OF VERMONT
JEFFREY W. HUNTINGTON
No. 5846
REGISTERED PROFESSIONAL ENGINEER

02/03/2004

THESE PLANS ARE SUBJECT TO SUCH ENGINEERING CHANGES AS MAY BE REQUIRED BY THE FEDERAL HIGHWAY ADMINISTRATION OR THE DIRECTOR OF PROJECT DEVELOPMENT. CONSTRUCTION IS TO BE CARRIED ON IN ACCORDANCE WITH THESE PLANS AND THE STANDARD SPECIFICATIONS FOR CONSTRUCTION DATED 2001, AS APPROVED BY THE FEDERAL HIGHWAY ADMINISTRATION ON JANUARY 4, 2001 FOR USE ON THIS PROJECT, INCLUDING ALL SUBSEQUENT REVISIONS AND SUCH REVISED SPECIFICATIONS AND SPECIAL PROVISIONS AS ARE INCORPORATED IN THESE PLANS.

APPROVED _____ DATE 2-5-04
SUSAN S. SPAULDING
MUNICIPAL PROJECT MANAGER

APPROVED _____ DATE 2/9/04
DIRECTOR OF PROGRAM DEVELOPMENT

PROJECT NAME :
CHESTER BHO 1442 (32)

D & K DWG NO. 11344 Sheet 1 of 22

I:\11344\dgn\11xxxsh.dgn 02/03/2004 02:02:37 PM

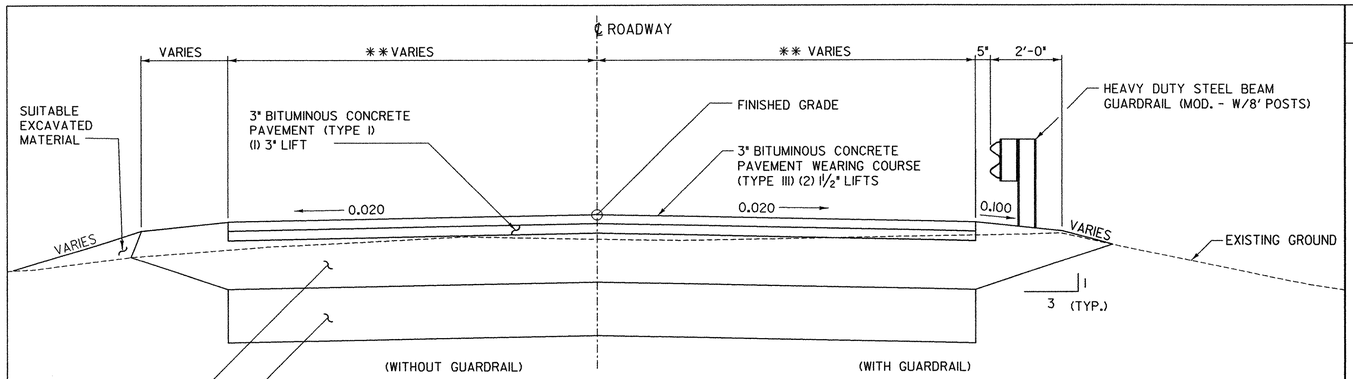

TYPICAL ROADWAY SECTION

SCALE ½" = 1'-0

1 0 1 2

* FOR MATERIAL DEPTH DETAILS SEE SHEET 6

** ROADWAY WIDTH VARIES THROUGHOUT PROJECT. REFER TO PLAN SHEET AND ROADWAY CROSS SECTIONS FOR WIDTHS AT SPECIFIC STATIONS.

TRAFFIC DATA

2000 ADT = 530
2000 DHV = 75
2000 ADTT = 11
2020 ADT = 725
2020 DHV = 105
2020 ADTT = 14
T = 2%
D = 60%
DESIGN SPEED = 25 MPH
ESALS (FLEXIBLE) TOTAL BOTH DIRECTIONS
(2000-2020) 229,000
(2000-2040) 731,000

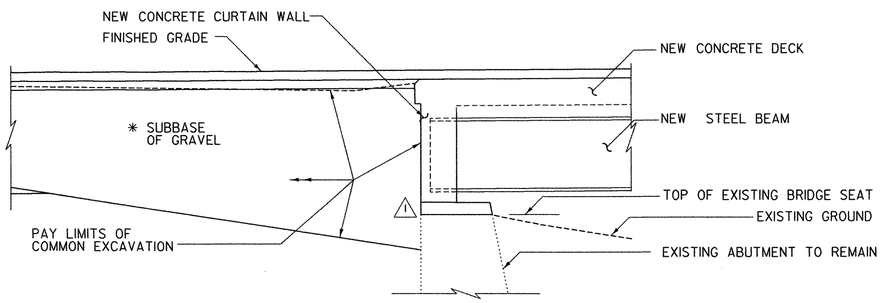

NOTES:

THE PAY LIMITS OF STRUCTURE EXCAVATION AND GRANULAR BACKFILL FOR THE NEW WING WALLS, SHALL BE AS SHOWN ON SHEET 18.

TYPICAL ABUTMENT SECTION

SCALE ½" = 1'-0

1 0 1 2

MATERIAL TOLERANCE TABLE

MATERIAL ITEM	TOLERANCE
BITUMINOUS CONCRETE PAVEMENT	± ¼" TOTAL THICKNESS
SUBBASE OF CRUSHED GRAVEL	± 1"
GRANULAR BACKFILL FOR STRUCTURES	± 1"

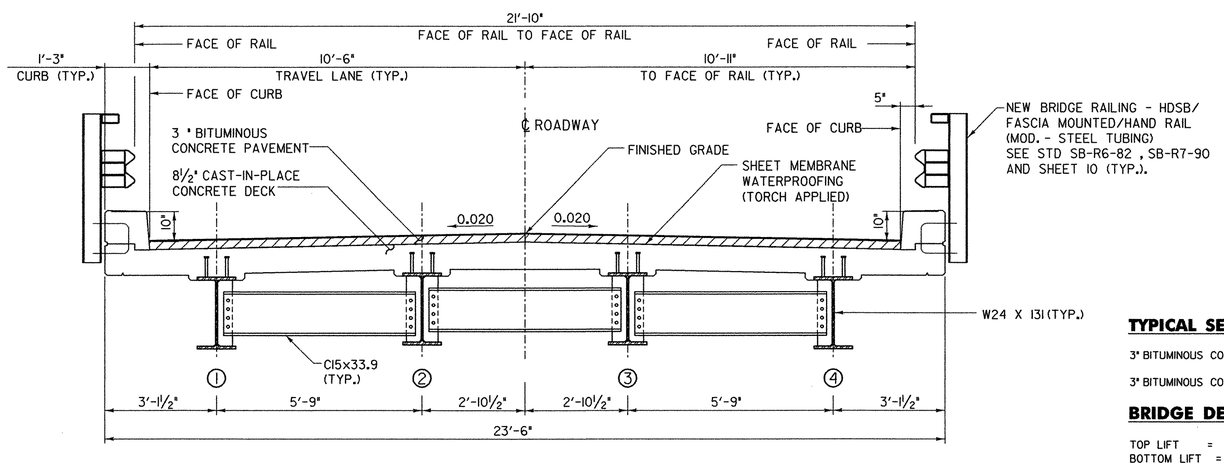

TYPICAL BRIDGE SECTION

SCALE ½" = 1'-0

1 0 1 2

TYPICAL SECTIONS

3" BITUMINOUS CONCRETE PAVEMENT (TYPE III)

3" BITUMINOUS CONCRETE PAVEMENT (TYPE I)

BRIDGE DECK PAVEMENT

TOP LIFT = 1½" TYPE III
BOTTOM LIFT = 1½" TYPE IV

EMULSIFIED ASPHALT BETWEEN LIFTS

* NOTE: ALL BITUMINOUS CONCRETE PAVEMENT SHALL BE PG-58-34

02/10/2004

FINAL HYDRAULICS REPORT

HYDROLOGIC DATA

DRAINAGE AREA= ____
CHARACTER OF TERRAIN: ____
CHARACTER & TYPE OF STREAM: ____

NATURE OF STREAMBED: ____

Q2.33= ____ Q50= ____
Q10= ____ Q100= ____
Q25= ____ Q500= ____

DATE OF FLOOD OF RECORD: ____
WATER SURFACE ELEV.: ____ ESTIMATED DISCHARGE: ____
NATURAL STREAM VELOCITY @ Q ____
ICE CONDITIONS: ____ DEBRIS: ____
DOES THE STREAM REACH MAXIMUM HIGHWATER ELEVATION RAPIDLY ____
IS ORDINARY RISE RAPID? ____
IS STAGE AFFECTED BY UPSTREAM OR DOWNSTREAM CONDITIONS? ____
IF YES, DESCRIBE. ____

WATERSHED STORAGE ____ HEADWATERS ____ UNIFORM THROUGHOUT WATERSHED ____
IMMEDIATELY ABOVE SITE ____

EXISTING STRUCTURE

STRUCTURE TYPE: TWO SPAN STEEL BEAM WITH CONCRETE DECK YEAR BUILT: 1940
CLEAR SPAN (NORMAL TO STREAM): 109 FT.
VERTICAL CLEARANCE ABOVE STREAMBED: ____
WATERWAY OF FULL OPENING: ____
DISPOSITION OF STRUCTURE: REMOVE EXISTING SUPERSTUCTURE
EXISTING ABUTMENTS AND PIER ARE TO REMAIN
TYPE OF MATERIAL UNDER SUBSTRUCTURE: ____

WATER SURFACE ELEV. @ Q2.33= ____ VELOCITY= ____
Q10= ____
Q25= ____
Q50= ____
Q100= ____

LONG TERM STREAM BED CHANGES: ____

IS THE ROADWAY OVERTOPPED BELOW THE Q100? ____ FREQUENCY: ____
RELIEF ELEVATION: ____ DISCHARGE OVER ROAD @ Q100: ____

UPSTREAM STRUCTURE: TOWN: ____ DISTANCE: ____
HIGHWAY NO.: ____ STRUCTURE NO.: ____

NOTE: ____

DOWNSTREAM STRUCTURE: TOWN: ____ DISTANCE: ____
HIGHWAY NO.: ____ STRUCTURE NO.: ____

NOTE: ____

PROPOSED STRUCTURE

STRUCTURE TYPE: STEEL BEAMS WITH COMPOSITE CONCRETE DECK (2 SPAN CONTINUOUS)

CLEAR SPAN (NORMAL TO STREAM): 109 FT.
VERTICAL CLEARANCE ABOVE STREAMBED: ____
WATERWAY OF FULL OPENING: ____

WATER SURFACE ELEV. @ Q2.33= ____ VELOCITY= ____
Q10= ____
Q25= ____
Q50= ____
Q100= ____

IS THE ROADWAY OVERTOPPED BELOW THE Q100? ____ FREQUENCY: ____
RELIEF ELEVATION: ____ DISCHARGE OVER ROAD @ Q100: ____

AVERAGE LOW ELEVATION OF SUPERSTRUCTURE: ____
VERTICAL CLEARANCE @ Q25 ____

SCOUR: ____
REQUIRED CHANNEL PROTECTION: ____

PERMIT INFORMATION

AVERAGE DAILY FLOW: ____
ORDINARY LOW WATER: ____ DEPTH: ____
ORDINARY HIGH WATER: ____ DEPTH: ____

ADDITIONAL COMMENTS

NO CHANNEL OR OTHER WORK IS BEING PERFORMED UNDER THIS PROJECT, WHICH HAS ANY IMPACT ON HYDRAULICS. THEREFORE, A HYDRAULIC ANALYSIS HAS NOT BEEN PERFORMED.

STRENGTH RF = $\dfrac{\phi M_N - 1.3M_{DL}}{A \times M_{LL+I}}$

*SERVICEABILITY RF = B $\left[\dfrac{.95F_Y S_{LL+I} - M_{DL}\frac{S_{LL+I}}{S_{DL}} - M_{SDL}\frac{S_{LL+I}}{S_{DL}}}{1.67\ M_{LL+I}}\right]$

LOAD FACTOR LOAD RATING (TONS)

LOADING LEVELS (LOAD FACTOR)	TRUCK H	HS	3S2	6 AXLE	3A STR	4A STR	5A SEMI
INVENTORY A=2.17 B=1.00	50	58	X	X	X	X	X
POSTED A=1.55 B=1.40	70	82	109	X	38	79	103
OPERATING A=1.30 B=1.67	X	97	130	125	45	94	X

DESIGN CRITERIA:
1. DESIGN LIVE LOAD AASHTO HS-25-44
2. DESIGN SPAN 114.0 FT.
3. ALLOWABLE LOAD FOR SPREAD FOOTINGS ON SOIL N/A ON LEDGE N/A
4. ALLOWABLE LOAD FOR PILING N/A TYPE ____ ESTIMATED LENGTH N/A
5. STRUCTURAL STEEL AASHTO M270M/M270, GRADE 50 W
6. REINFORCING STEEL GRADE 60
7. CONCRETE, HIGH PERFORMANCE CLASS A f'_c 4000 psi
CONCRETE, HIGH PERFORMANCE CLASS B f'_c 3500 psi

TRAFFIC MAINTENANCE:
1. IS TRAFFIC TO BE MAINTAINED? NO IF YES, ON EXISTING STRUCTURE N/A OR ON TEMPORARY BRIDGE N/A
EXISTING BRIDGE TO BE CLOSED, TRAFFIC TO BE DETOURED AROUND CONSTRUCTION SITE
2. TEMPORARY BRIDGE REQUIREMENTS: ONE OR TWO WAY N/A TRAFFIC CONTROL SIGNALS REQUIRED N/A
MINIMUM CLEAR SPAN (NORMAL TO STREAM): ____ VERTICAL CLEARANCE ABOVE STREAMBED: ____
WATERWAY OF FULL OPENING: ____
ARE SIDEWALKS REQUIRED? ____ IF SO, ON WHAT SIDE? ____
STRUCTURE TYPE: ____

REVISIONS

NO.	DESCRIPTION	BY & DATE
1	CONCRETE ABUTMENT CAP ADDED TO TYPICAL ABUTMENT SECTION	APG 2/3/04

DuBois & King inc.
engineering planning management development

STATE OF VERMONT
AGENCY OF TRANSPORTATION

Town Of CHESTER | Bridge No. 11
Highway No. TH 5 | Log Sta. - | Surv. Sta. -
CHURCH STREET OVER WILLIAMS RIVER

PRELIMINARY INFORMATION SHEET

Designed By B. C. AUSTIN | Drawn By G. J. WOJCIECHOWSKI
Checked By J. TUCKER Date 03/01 | Bridge Design Supervisor J. TUCKER Date 03/01
PROJECT CHESTER | PROJECT NO. BHO 1442 (32)
I.G.C. Info. ...zj365pl2 .dgn
D & K DWG NO. 11345 Sheet 2 of 22

BRIDGE QUANTITY SHEET

NO.	ITEM	UNIT	QUANTITY BREAKDOWN							TOTAL	GRAND TOTAL
			SUPER STRUCT.	ABUTMENT. NO. 1	ABUTMENT. NO. 2	PIER	EROSION CONTROL	ROADWAY	FULL E & C		
203.15	COMMON EXCAVATION	CY						290		290	
203.28	EXCAVATION OF SURFACE AND PAVEMENT	CY						32		32	
203.31	SAND BORROW	CY						30		30	
204.25	STRUCTURE EXCAVATION	CY			70					70	
204.30	GRANULAR BACKFILL FOR STRUCTURES	CY			45					45	
210.10	COLD PLANING - BITUMINOUS CONCRETE	SY						110		110	
301.15	SUBBASE OF GRAVEL	CY						160		160	
406.27	MEDIUM DUTY BITUMINOUS CONC. PAVEMENT (PG 58-34)	TON	45					85		130	
501.33	CONCRETE, HIGH PERFORMANCE CLASS A	CY	95	1	1					97	
501.34	CONCRETE, HIGH PERFORMANCE CLASS B	CY		3	17	6				26	
506.50	STRUCTURAL STEEL (ROLLED BEAM)	LB	70450							70450	
507.15	REINFORCING STEEL	LB		45	1625					1670	
507.16	DRILLING AND GROUTING DOWELS	LF		25		15				40	
507.17	EPOXY COATED REINFORCING STEEL	LB	21400	100	250	750				22500	
508.15	SHEAR CONNECTORS (1144 - 7/8" X 7")	LS	1							1	
514.10	WATER REPELLENT	GAL	8	2	2	8				20	
519.20	SHEET MEMBRANE WATERPROOFING (TORCH APPLIED)	SY	300							300	
524.10	JOINT SEALER, HOT POURED	GAL	1							1	
525.43	BRIDGE RAILING-HDSB/FASCIA MOUNTED/HANDRAIL	LF	271							271	
	(MOD. - STEEL TUBING)										
529.10	REMOVAL OF BRIDGE PAVEMENT	SY	280							280	
529.20	PARTIAL REMOVAL OF STRUCTURE	EA	0.7	0.1	0.1	0.1				1	
531.10	BEARING DEVICE ASSEMBLY	EA		4	4	4				12	
580.13	REPAIR CONCRETE SUBSTRUCTURE SURFACE CLASS I	SY		1	1	2				4	
580.14	REPAIR CONCRETE SUBSTRUCTURE SURFACE CLASS II	SY		1	1	2				4	
580.15	REPAIR CONCRETE SUBSTRUCTURE SURFACE CLASS III	CY				1				1	
609.10	DUST CONTROL WITH WATER	MGAL						10		10	
613.11	STONE FILL, TYPE II	CY						90		90	
621.21	HEAVY DUTY STEEL BEAM GUARDRAIL (MOD. - W/8' POSTS	LF						190		190	
621.60	ANCHOR FOR STEEL BEAM RAIL	EA						4		4	
621.80	REMOVAL AND DISPOSAL OF GUARD RAIL	LF						80		80	
621.90	TEMPORARY TRAFFIC BARRIER	LF						60		60	
630.10	UNIFORMED TRAFFIC OFFICERS	HR						50		50	
630.15	FLAGGERS	HR						50		50	
631.10	FIELD OFFICE - ENGINEERS	LS							1	1	
631.16	TESTING EQUIPMENT - CONCRETE	LS							1	1	
631.17	TESTING EQUIPMENT - BITUMINOUS	LS							1	1	
631.25	FIELD OFFICE - TELEPHONE (N.A.B.I.)	LU							1	1	
635.10	MOBILIZATION	LS	0.8					0.2		1	
641.10	TRAFFIC CONTROL	LS						1		1	
646.20	4" WHITE LINE	LF						510		510	
646.21	4" YELLOW LINE	LF						510		510	
649.31	GEOTEXTILE UNDER STONE FILL	SY						170		170	
649.51	GEOTEXTILE FOR SILT FENCE	SY					140			140	
651.15	SEED	LB					25			25	
651.18	FERTILIZER	LB					50			50	
651.20	AGRICULTURAL LIMESTONE	TON					1			1	
651.25	HAY MULCH	TON					1			1	
651.26	HAY BALES FOR EROSION CONTROL	EA					50			50	
651.35	TOPSOIL	CY					50			50	
652.10	EROSION AND SEDIMENT CONTROL PLAN	LS					1			1	
652.20	MONITORING EROSION AND SEDIMENT CONTROL PLAN	HR					80			80	
652.30	FIELD MAINTENANCE OF EROSION AND SEDIMENT	LU					1			1	
	CONTROL PLAN (N.A.B.I.)										

02/13/2004

REVISIONS		
NO.	DESCRIPTION	BY & DATE

DuBois & King inc.
ENGINEERING PLANNING MANAGEMENT DEVELOPMENT

STATE OF VERMONT
AGENCY OF TRANSPORTATION

Town Of	CHESTER	Bridge No.	11
Highway No.	TH 5	Log Sta.	-
		Surv. Sta.	-

CHURCH STREET OVER WILLIAMS RIVER

QUANTITY SHEET

Designed By B. AUSTIN		Drawn By G. J. WOJCIECHOWSKI	
Checked By J. TUCKER	Date 10/03	Bridge Design Supervisor J. TUCKER	Date 10/03
PROJECT CHESTER		PROJECT NO. BHO 1442 (32)	
I.G.C. Info. ...zj365q03 .dgn			
D & K DWG NO. 11346		Sheet 3 of 22	

L:\BRIDGE\dgn\zjxxq03.dgn 02/13/2004 01:15:37 PM

LAYOUT COORDINATES			
STA. 1+00.00	POB	N 9981.94	E 9890.62
STA 2+17.00	BEGIN BRIDGE	N 10018.10	E 10001.90
STA. 3+30.18	PC	N 10053.21	E 10109.97
STA 3+33.00	END BRIDGE	N 10053.94	E 10112.22
STA. 3+94.90	PI	N 10073.07	E 10171.09
STA. 4+59.61	PT	N 10093.96	E 10231.86
STA 5+35.40	POE	N 10118.73	E 10303.97
HVCTRL 1	CONTROL POINT	N 10000.00	E 10000.00
HVCTRL 2	CONTROL POINT	N 10101.85	E 10068.70

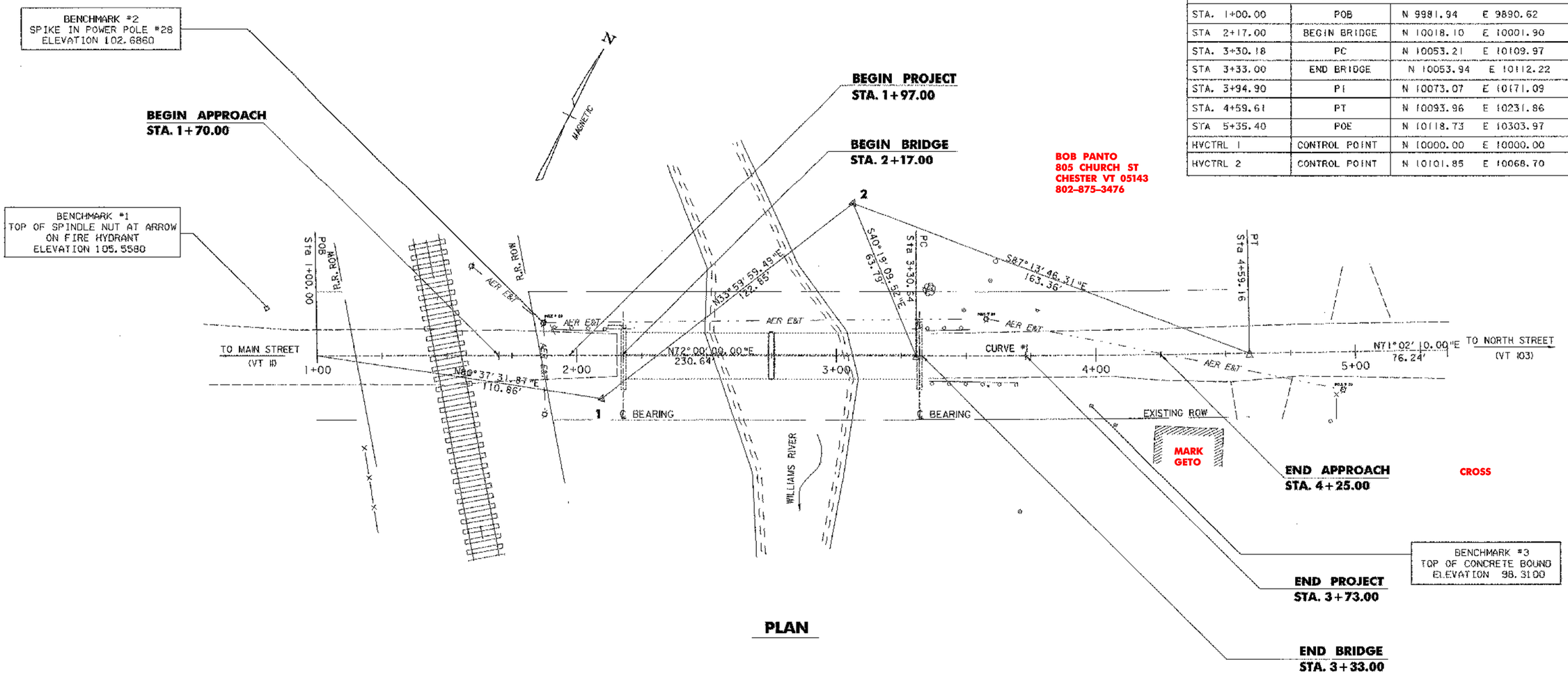

PLAN

TIES

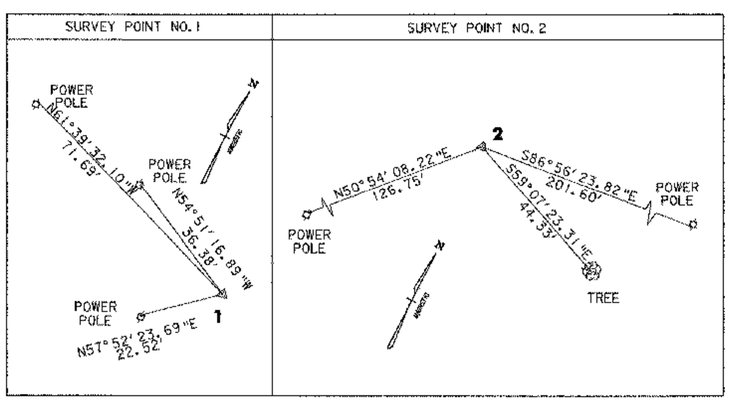

DATUM
VERTICAL LOCAL
HORIZONTAL LOCAL

LEGEND

EXISTING EDGE OF RIVER
EXISTING TRAVELED WAY
EXISTING GUARD RAIL
CULVERT
UTILITY POLE
TELEPHONE POLE
TREES
TREE LINE
OVERHEAD LINES
SURVEY POINT

20 0 10 20 40 80
SCALE IN FEET

02/03/2004

CURVE DATA

CURVE # 1
Δ = 0°57' 50"
R = 7639.50'
T = 64.26'
L = 128.52'
D = 0°45' 00"

REVISIONS		
NO.	DESCRIPTION	BY & DATE

DuBois & King inc.
engineering planning management development

STATE OF VERMONT
AGENCY OF TRANSPORTATION

Town Of	CHESTER	Bridge No.	11
Highway No.	TH 5	Log Sta.	-
		Surv. Sta.	-

CHURCH STREET OVER WILLIAMS RIVER

TIE SHEET

Designed By G. J. WOJCIECHOWSKI		Drawn By G. J. WOJCIECHOWSKI	
Checked By J. TUCKER	Date 03/01	Bridge Design Supervisor J. TUCKER	Date 03/01
PROJECT	CHESTER	PROJECT NO.	BHO 1442 (32)
I.G.C. Info.	...zj365104.dgn		
D & K DWG NO.	11347	Sheet 4 of 22	

FINAL GRADE RAISED 1" TO OBTAIN 1" MIN BEAM HAUNCH

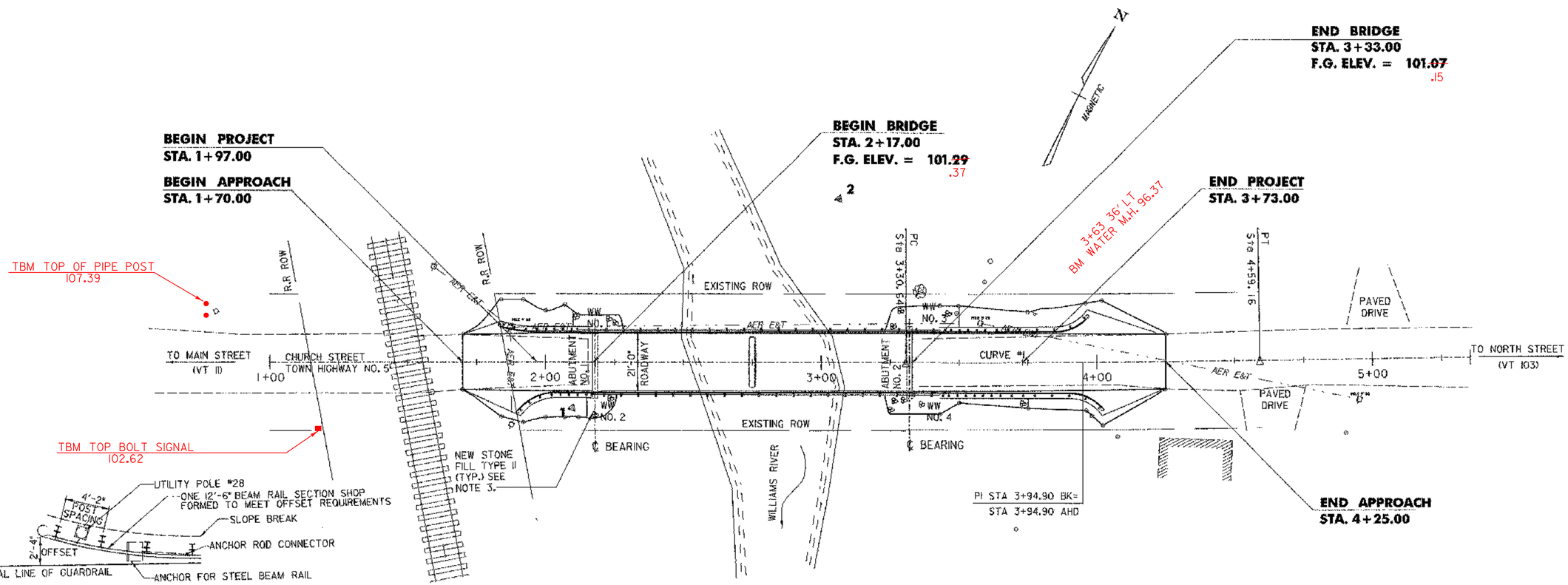

APPROACH END DETAIL AT N.W. CORNER

SCALE: 1" = 5'

PLAN

20 0 10 20 40 80

SCALE IN FEET

ANCHOR FOR STEEL BEAM GUARDRAIL

STA 1+86.70 LT — STA 3+90.50 LT
STA 1+97.40 RT — STA 3+95.80 RT

COLD PLANING-BITUMINOUS PAVEMENT

STA 1+70.00 TO STA 1+85.00
STA 3+95.00 TO STA 4+25.00

REMOVAL AND DISPOSAL OF GUARDRAIL

32 1+80.00 STA ~~1+91.00~~ TO STA 2+12.00 LT
18' STA 3+34.00 TO STA ~~3+51.00~~ LT 3+52.00
40' STA 3+34.00 TO STA ~~3+70.00~~ RT 3+74.00

HEAVY DUTY STEEL BEAM GUARDRAIL (MOD. – W/8' POSTS)

STA 1+82.50 TO STA 2+07.50 LT
STA 1+89.75 TO STA 2+14.75 RT
STA 3+47.00 TO STA 3+97.00 LT
STA 3+46.00 TO STA 4+02.25 RT

4" WHITE LINES

STA 1+70.00 TO STA 4+25.00 SOLID RT & LT

4" YELLOW LINES (DOUBLE CENTERLINE)

STA 1+70.00 TO STA 4+25.00 SOLID RT & LT

STONE FILL, TYPE II

STA 2+15 TO STA 2+25 RT
STA 2+10 TO STA 2+28 LT
STA 3+24 TO STA 3+75 RT
STA 3+24 TO STA 3+50 LT

CURVE DATA

CURVE # 1
Δ = 0°57' 50"
R = 7639.50'
T = 64.26'
L = 128.52'
D = 0°45' 00"

NOTES:

1. THE EXISTING R.O.W. ON CHURCH STREET IS ASSUMED TO BE A 3 ROD (49.5 FEET), CENTERED ON THE EXISTING ROADWAY.
2. THE EXISTING RAILROAD R.O.W IS ASSUMED TO BE 70 FEET, CENTERED ON THE TRACK.
3. NEW STONE FILL, TYPE II SHALL BE PLACED ON SIDE SLOPES AT LOCATIONS SHOWN. SEE DETAIL SHEET 22.
4. THE UTILITY COMPANY SHALL BE CONTACTED IN ADVANCE OF EXCAVATING NEAR UTILITY POLE #28 TO ALLOW TEMPORARY STABILIZATION DURING THE PLACEMENT OF THE GUARDRAIL ANCHOR.

LEGEND

EXISTING EDGE OF RIVER
EXISTING TRAVELED WAY
PROPOSED TRAVELED WAY
ROW
GUARD RAIL
CULVERT
UTILITY POLE
TELEPHONE POLE
TREES
TREE LINE

DATUM
VERTICAL LOCAL
HORIZONTAL LOCAL

02/03/2004

REVISIONS

NO.	DESCRIPTION	BY & DATE

DuBois & King inc.
engineering planning management development

STATE OF VERMONT
AGENCY OF TRANSPORTATION

Town Of CHESTER	Bridge No. 11
Highway No. TH 5	Log Sta. – / Surv. Sta. –
CHURCH STREET OVER WILLIAMS RIVER	
PLAN SHEET	
Designed By B. C. AUSTIN	Drawn By C. J. WOJCIECHOWSKI
Checked By J. TUCKER Date 03/01	Bridge Design Supervisor J. TUCKER Date 03/01
PROJECT CHESTER	PROJECT NO. BHO 1442 (32)
L.G.C. Info. ...zj365105.dgn	
D & K DWG NO. 11348	Sheet 5 of 22

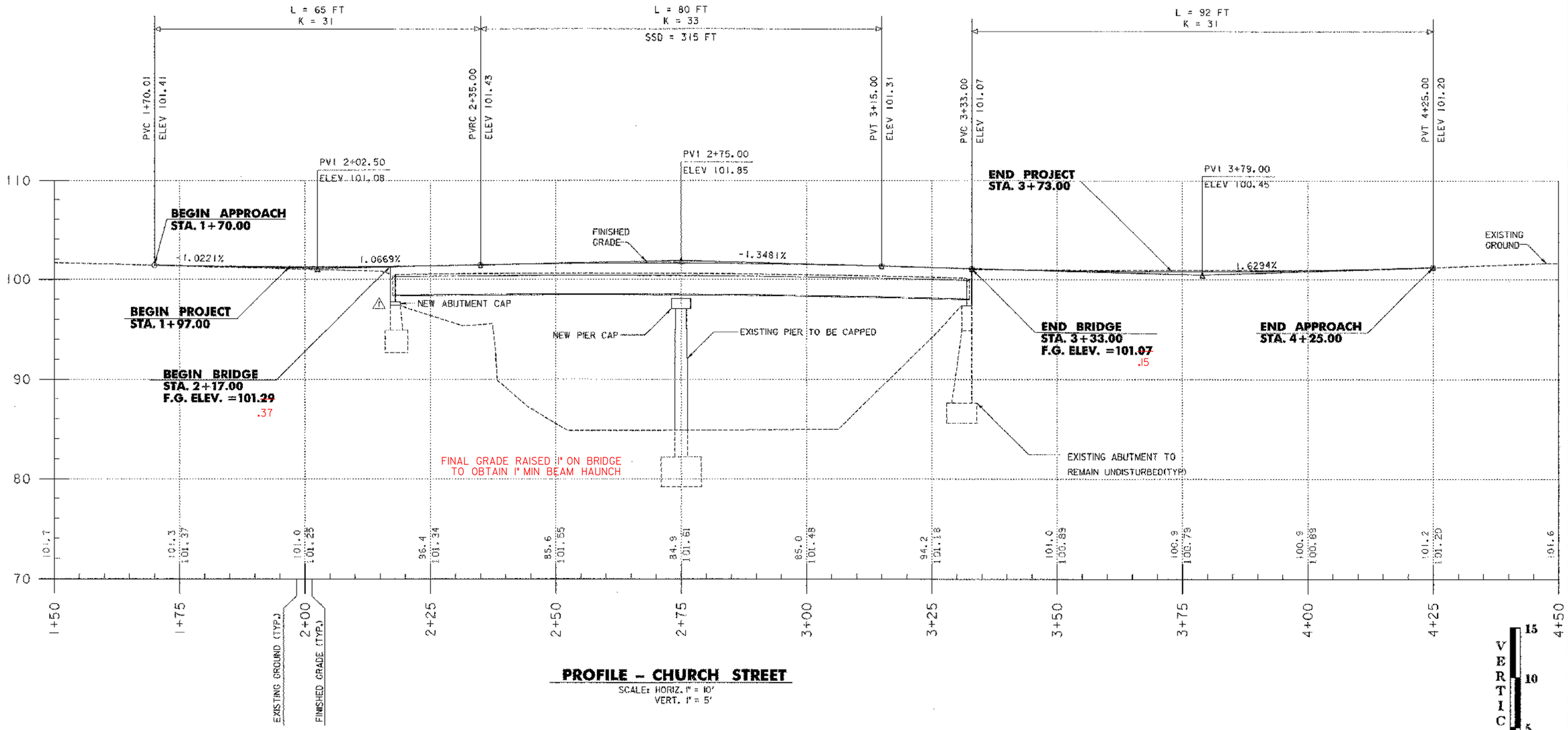

PROFILE - CHURCH STREET

SCALE: HORIZ. 1" = 10'
VERT. 1" = 5'

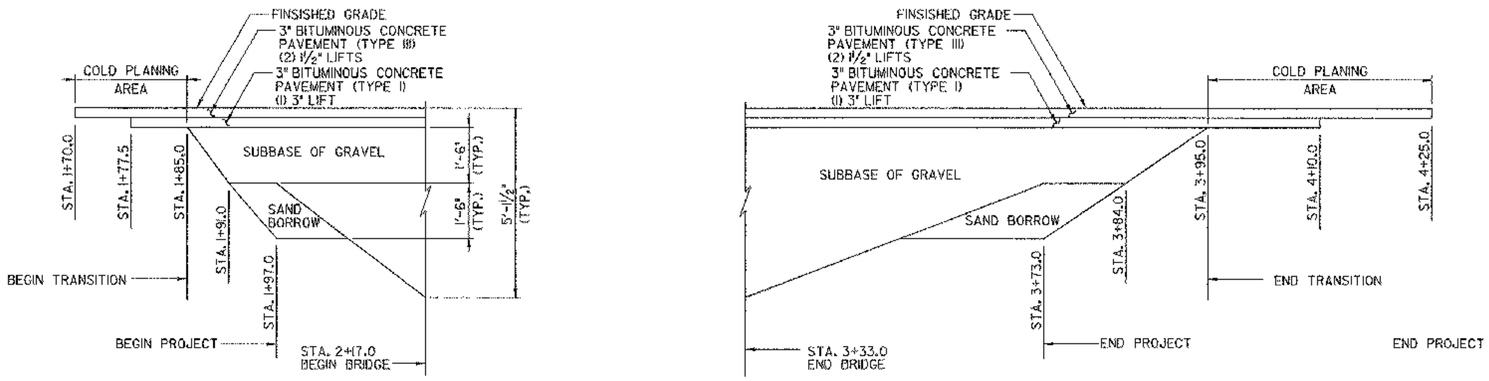

MATERIAL DEPTH TRANSITION DETAIL

N.T.S.

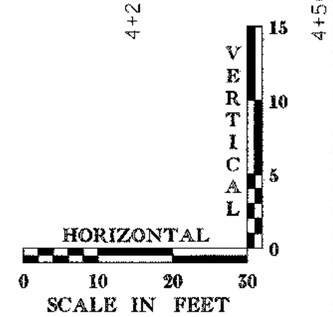

REVISIONS		
NO.	DESCRIPTION	BY & DATE
1	ADDED ABUTMENT CAP TO ABUTMENT NO. 1IN PROFILE	APG 2/3/04

DuBois & King inc.
engineering planning management development

02/10/2004

STATE OF VERMONT
AGENCY OF TRANSPORTATION

Town Of	CHESTER	Bridge No.	11
Highway No.	TH 5	Log Sta.	-
		Surv. Sta.	-

CHURCH STREET OVER WILLIAMS RIVER

PROFILE

Designed By G. J. WOJCIECHOWSKI		Drawn By G. J. WOJCIECHOWSKI	
Checked By J. TUCKER	Date 03/01	Bridge Design Supervisor J. TUCKER	Date 03/01
PROJECT CHESTER		PROJECT NO. BHO 1442 (32)	
I.G.C. Info. ...z1365pf6.dgn			
D & K DWG NO. 11349		Sheet 6 of 22	

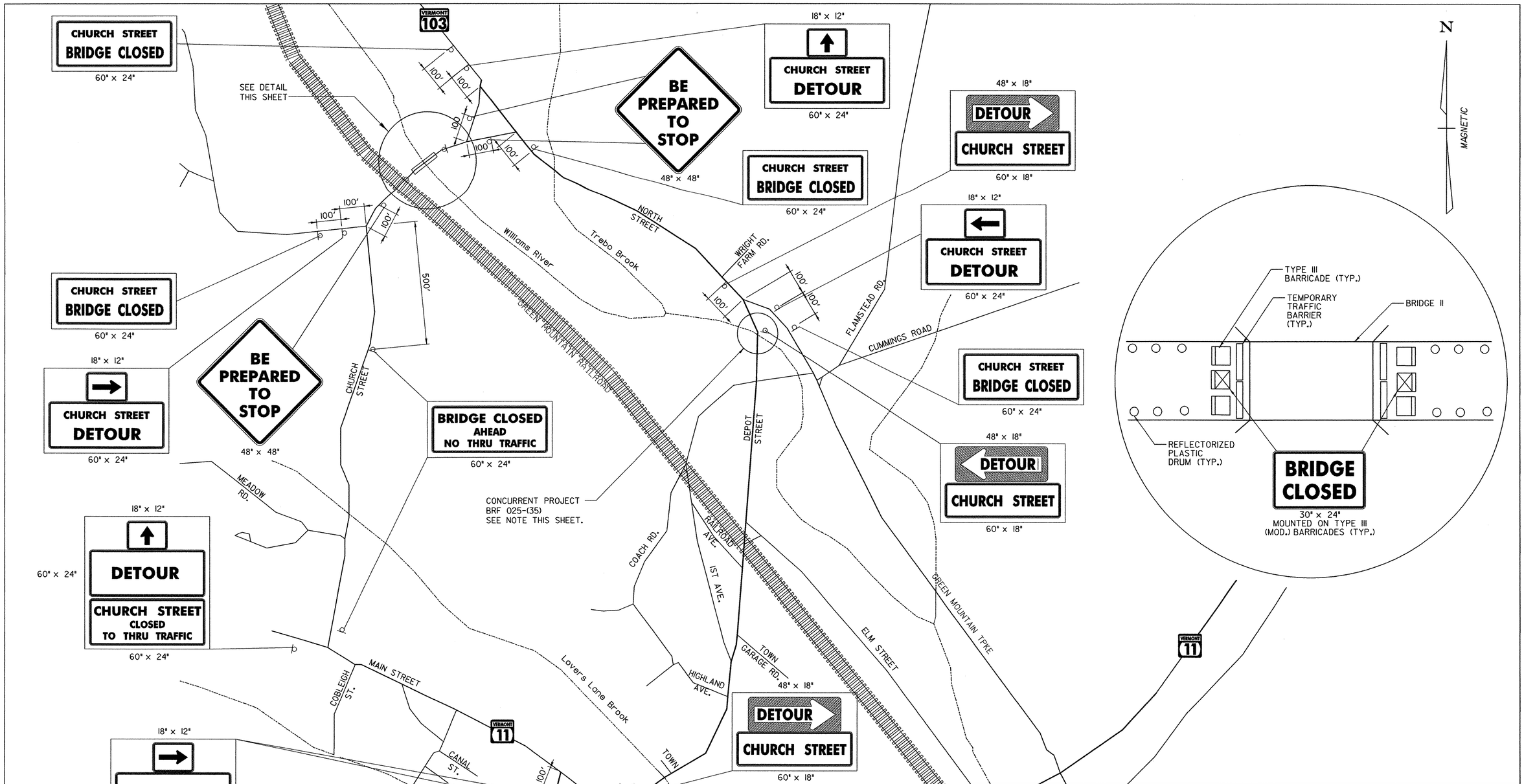

NOTES:

1. FOR TRAFFIC CONTROL NOTES SEE CONSTRUCTION NOTES SHEET 10.
2. THE CONTRACTOR SHALL CONTACT THE CONTRACTOR OF THE CONCURRENT PROJECT BHF 025-1(35) TO COORDINATE THE TRAFFIC CONTROL SIGNING NEAR BRIDGE NUMBER 12 ON VT 103 AND ON THE APPROACHES TO THE PROJECT. THIS SHALL BE PAID FOR INCIDENTAL TO ITEM 641.10, 'TRAFFIC CONTROL.'

TEMPORARY DETOUR SITE PLAN
NOT TO SCALE

TOWN OF CHESTER

02/03/2004

REVISIONS		
NO.	DESCRIPTION	BY & DATE

DuBois & King inc.
engineering planning management development

STATE OF VERMONT
AGENCY OF TRANSPORTATION

Town Of	CHESTER	Bridge No.	11
Highway No.	TH 5	Log Sta.	-
		Surv. Sta.	-

CHURCH STREET OVER WILLIAMS RIVER

TRAFFIC CONTROL SHEET

Designed By	K. S. MARSHIA	Drawn By	G. J. WOJCIECHOWSKI
Checked By	J. TUCKER	Date	03/01
Bridge Design Supervisor	J. TUCKER	Date	03/01
PROJECT	CHESTER	PROJECT NO.	BHO 1442 (32)
I.G.C. Info.	...zj365d07.dgn		
D & K DWG NO.	11350	Sheet	7 of 22

I:\9164\dgn\zjxx10.dgn 02/03/2004 02:05:52 AM

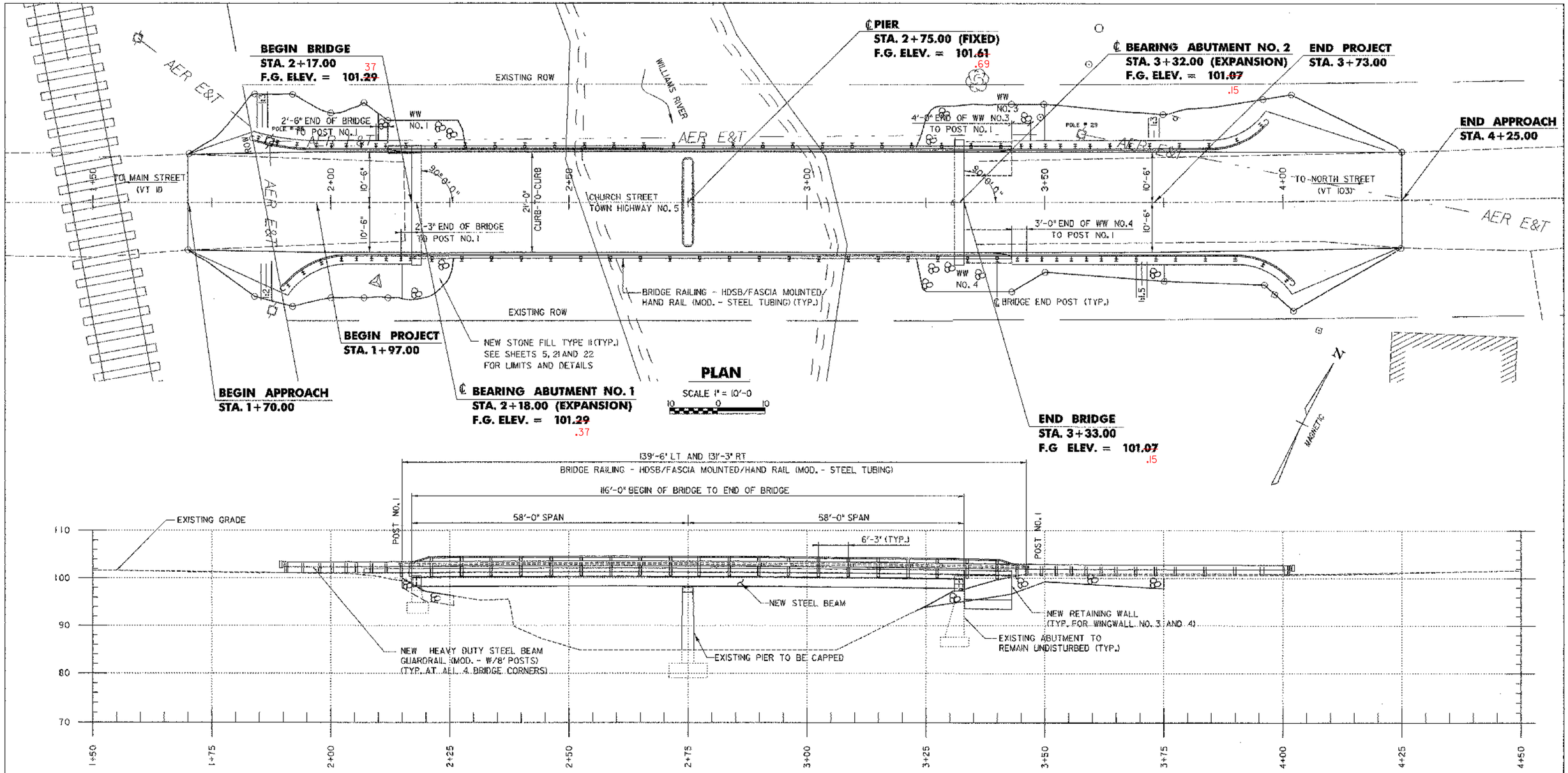

NOTES

1. THE EXISTING R.O.W. ON CHURCH STREET IS ASSUMED TO BE A 3 ROD (49.5 FEET), CENTERED ON THE EXISTING ROADWAY.
2. THE EXISTING RAILROAD R.O.W IS ASSUMED TO BE 70 FEET, CENTERED ON THE TRACK.

ELEVATION

SCALE 1" = 10'-0

DATUM
VERTICAL LOCAL
HORIZONTAL LOCAL

02/03/2004

REVISIONS		
NO.	DESCRIPTION	BY & DATE

DuBois & King inc.
engineering planning management development

STATE OF VERMONT
AGENCY OF TRANSPORTATION

Town Of CHESTER	Bridge No. 11
Highway No. TH 5	Log Sta. - / Surv. Sta. -
CHURCH STREET OVER WILLIAMS RIVER	
PLAN & ELEVATION	
Designed By B. C. AUSTIN	Drawn By G. J. WOJCIECHOWSKI
Checked By J. TUCKER Date 03/01	Bridge Design Supervisor J. TUCKER Date 03/01
PROJECT CHESTER	PROJECT NO. BHO 1442 (32)
L.O.C. Info. ...zj365pe8.dgn	
D & K DWG NO. 11351	Sheet 8 of 22

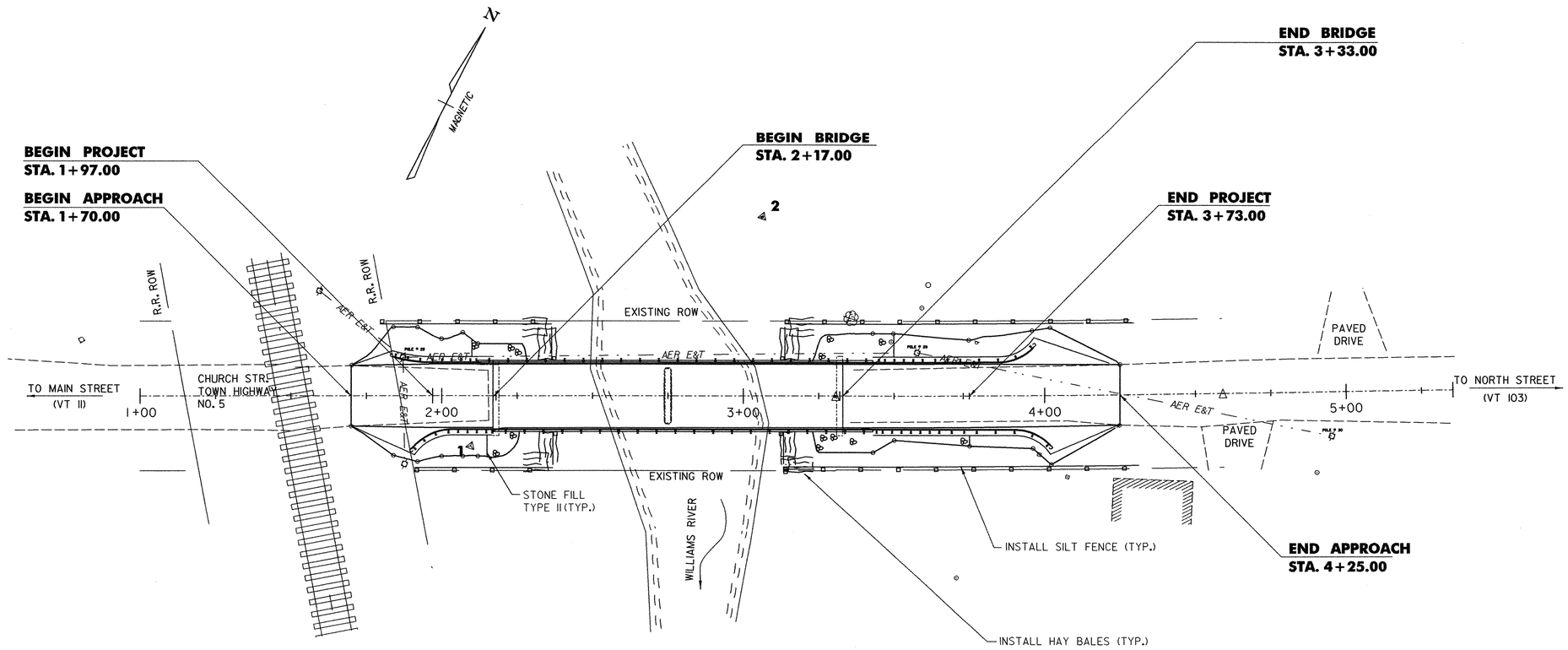

EROSION CONTROL PLAN

20 0 10 20 40 80

SCALE IN FEET

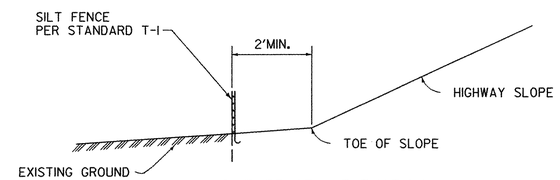

SILT FENCE - ELEVATION

NOTE:
THIS DETAIL SHOWS ONLY THE MODIFICATION OF SILT FENCE SET-BACK FROM TOE OF SLOPE PER STANDARD T-1

EROSION CONTROL NOTES

1. THE CONTRACTOR SHALL INSTALL SILT FENCE AND HAY BALES FOR EROSION CONTROL AS LOCATED ON THE PLANS, PRIOR TO CONSTRUCTION. ALL SUCH INSTALLATION SHALL BE WITHIN THE EXISTING R.O.W.
2. THE CONTRACTOR SHALL LOAM, SEED, FERTILZE AND MULCH ALL DISTURBED AREAS, EXCEPT ROADWAY AND SHOULDERS PRIOR TO THE COMPLETION OF THE PROJECT.
3. REFER TO STANDARD T-1 AND T-2 FOR ADDITIONAL DETAILS.

DATUM
VERTICAL LOCAL
HORIZONTAL LOCAL

02/03/2004

LEGEND

- EXISTING EDGE OF RIVER
- EXISTING TRAVELED WAY
- PROPOSED TRAVELED WAY
- ROW
- GUARD RAIL
- CULVERT
- UTILITY POLE
- TELEPHONE POLE
- TREES
- TREE LINE
- SILT FENCE

REVISIONS		
NO.	DESCRIPTION	BY & DATE

DuBois & King inc.
engineering planning management development

STATE OF VERMONT
AGENCY OF TRANSPORTATION

Town Of	CHESTER	Bridge No.	11
		Log Sta.	-
Highway No.	TH 5	Surv. Sta.	-

CHURCH STREET OVER WILLIAMS RIVER

EROSION CONTROL SHEET

Designed By	B. C. AUSTIN	Drawn By	G. J. WOJCIECHOWSKI
Checked By J. TUCKER	Date 03/01	Bridge Design Supervisor J. TUCKER	Date 03/01
PROJECT	CHESTER	PROJECT NO.	BHO 1442 (32)
I.G.C. Info.	...zJ365EC9.dgn		
D & K DWG NO.	11352	Sheet 9 of 22	

I:\hbd4\dgn\zjxxec9.dgn 02/03/2004 09:27:46 AM

GENERAL NOTES:

1. ALL MATERIALS AND CONSTRUCTION SHALL CONFORM TO STATE OF VERMONT AGENCY OF TRANSPORTATION'S STANDARD SPECIFICATIONS FOR HIGHWAY AND BRIDGE CONSTRUCTION, DATED 2001, AND ITS LATEST REVISIONS, AND THE AASHTO STANDARD SPECIFICATIONS FOR HIGHWAY BRIDGES, 17TH EDITION, DATED 2002, AND ITS LATEST REVISIONS.

2. DIMENSIONS, ANGLES, BEARINGS, AND ELEVATIONS OF THE EXISTING BRIDGE SHOWN ON THESE PLANS HAVE BEEN OBTAINED FROM PLANS OF THE EXISTING STRUCTURE AND LIMITED FIELD INVESTIGATION AND MAY NOT ACCURATELY REFLECT THE ACTUAL FIELD CONDITIONS. THE CONTRACTOR SHALL BE RESPONSIBLE FOR MAKING FIELD MEASUREMENTS OF ALL EXISTING STRUCTURE COMPONENTS IMPACTED BY THE NEW WORK TO ASSURE CONSISTENCY WITH THE PROPOSED MODIFICATIONS. ANY DISCREPANCIES IN DIMENSIONS, CHARACTER OR EXTENT OF THE EXISTING FEATURES SHALL BE BROUGHT TO THE ATTENTION OF THE ENGINEER BEFORE ADVANCING THE WORK.

3. WORKING DRAWINGS REQUIRED FOR VARIOUS ITEMS OF WORK SHALL INDICATE THE ACTUAL FIELD MEASUREMENTS AND SHALL BE SO NOTED.

4. ALL DIMENSIONS ARE HORIZONTAL OR VERTICAL, AND ARE GIVEN AT 68 DEGREES FAHRENHEIT, UNLESS NOTED OTHERWISE.

5. SEE PIER DETAILS SHEET 19 FOR CONCRETE REPAIR NOTES.

CONSTRUCTION NOTES:

1. THE CONTRACTOR SHALL USE CAUTION WHEN WORKING AROUND UNDERGROUND AND OVERHEAD UTILITIES.

2. THE CONTRACTOR SHALL REVIEW AND UNDERSTAND ALL APPLICABLE ENVIRONMENTAL DOCUMENTS AND ENSURE THAT ALL CONSTRUCTION CONDITIONS ARE MET.

3. A THOROUGH INSPECTION SHALL BE MADE OF SUBSTRUCTURE AREAS. AREAS OF CONCRETE FOUND TO BE SPALLED, DELAMINATED OR OTHERWISE UNSOUND SHALL BE REPAIRED. THE CONTRACTOR SHALL SUPPLY ANY MATERIALS REQUIRED FOR THE INSPECTION. ALL COSTS OF INSPECTION SHALL BE SUBSIDIARY TO ITEM 635.10, MOBILIZATION.

4. NO BACKFILL SHALL BE PLACED AGAINST ANY STRUCTURAL ELEMENTS UNTIL THE ENGINEER HAS APPROVED THIS WORK.

5. THE CONTRACTOR SHALL SUBMIT A SITE SPECIFIC EROSION/SEDIMENT CONTROL PLAN WITH A SCHEDULE OF EVENTS. THIS WORK SHALL BE PAID FOR UNDER ITEM 652.10, "EROSION AND SEDIMENT CONTROL PLAN"

6. CONCRETE AND ALL OTHER CONSTRUCTION MATERIALS ARE PROHIBITED FROM BEING DISCHARGED INTO THE WATERS OF THE STATE.

7. THE POST LENGTHS FOR RAILING TRANSITION POSTS AND POST #1 INCLUDED WITHIN THE BRIDGE RAIL PAY LIMITS, AND STEEL BEAM GUARDRAIL SHALL BE MODIFIED FROM 6 FEET TO 8 FEET. ALL COSTS SHALL BE INCLUDED IN ITEM 525.43, BRIDGE RAILING - HDSB/ FASCIA MOUNTED HAND RAIL (MOD.- STEEL TUBING) OR ITEM 621.21, HEAVY DUTY STEEL BEAM GUARDRAIL (MOD. - W/8' POSTS).

REMOVAL NOTES:

1. ITEM 529.20, PARTIAL REMOVAL OF STRUCTURE SHALL INCLUDE THE REMOVAL OF:

   a) EXISTING BRIDGE RAILING, CONCRETE CURBS AND POSTS, CONCRETE BRIDGE DECK AND CURTAIN WALLS
   b) STRUCTURAL STEEL BEAMS AND DIAPHRAGMS.
   c) BEARING DEVICES
   d) PORTIONS OF EXISTING WINGWALLS AND PIER AS SHOWN ON THE PLANS OR AS DIRECTED BY THE ENGINEER
   e) ERECTION, MAINTENANCE, AND REMOVAL OF TEMPORARY STRUCTURES TO PREVENT DEBRIS FROM FALLING INTO THE WATERWAY

2. REMOVAL OF EXISTING BRIDGE PAVEMENT SHALL BE PAID AS ITEM 529.10, REMOVAL OF BRIDGE PAVEMENT.

3. LIMITS OF WINGWALL AND PIER REMOVAL ARE APPROXIMATE. THE ENGINEER SHALL ESTABLISH ACTUAL LIMITS AFTER A COOPERATIVE INSPECTION BY THE CONTRACTOR AND THE ENGINEER. EXISTING ELEVATIONS SHALL BE FIELD VERIFIED TO ENSURE THAT THE REMOVAL LIMITS ARE ADEQUATE TO OBTAIN THE REQUIRED DIMENSIONS AND ELEVATIONS OF THE NEW CONSTRUCTION.

4. SAWCUTS SHALL BE ONE-INCH DEEP ALONG ALL EXPOSED REMOVAL LINES WHERE NEW CONCRETE IS PLACED AGAINST EXISTING CONCRETE. ALL COSTS SHALL BE INCLUDED IN ITEM 529.20, PARTIAL REMOVAL OF STRUCTURE.

5. EXISTING REINFORCING STEEL EXPOSED DURING REMOVAL OPERATIONS, WITHIN THE LIMITS OF THE NEW MASONRY, SHALL BE RETAINED AND INCORPORATED INTO THE NEW MASONRY. EXISTING REINFORCING STEEL TO BE RETAINED SHALL BE SAND BLASTED CLEAN OF ALL CONCRETE, DIRT, DETRIMENTAL SCALE, PAINT, OIL, AND OTHER FOREIGN SUBSTANCES. ALL COSTS SHALL BE INCLUDED IN ITEM 529.20, PARTIAL REMOVAL OF STRUCTURE.

6. AFTER PIER CONCRETE REMOVAL, THE EXISTING REINFORCING STEEL TO BE RETAINED SHALL BE INSPECTED BY THE RESIDENT ENGINEER. DEPENDING UPON THE EXTENT OF CORROSION OR DAMAGE TO THE EXISTING REINFORCING STEEL, THE RESIDENT ENGINEER MAY ELECT TO INCREASE THE NUMBER OF DRILL AND GROUT BARS IF APPROXIMATELY 20 PERCENT OR MORE AREA LOSS HAS OCCURRED. COSTS TO INSPECT THE REINFORCING STEEL SHALL BE INCLUDED IN ITEM 529.20, PARTIAL REMOVAL OF STRUCTURE.

7. ADDITIONAL DRILLING AND GROUTING, IF REQUIRED, SHALL BE PAID AT THE UNIT BID PRICE OF ITEM 507.17, EPOXY COATED REINFORCING STEEL AND ITEM 507.16, DRILLING AND GROUTING DOWELS.

8. THE STRUCTURAL STEEL BEAMS AND DIAPHRAGMS SHALL REMAIN THE PROPERTY OF THE TOWN OF CHESTER. THE CONTRACTOR SHALL BE RESPONSIBLE FOR COORDINATING WITH THE TOWN OF CHESTER PRIOR TO THE REMOVAL OF THE STRUCTRUAL STEEL FOR THE PROPER PROCEDURE IN SALVAGING THE BEAMS.

CONCRETE NOTES:

1. CONCRETE PAYMENT AND CLASSIFICATION SHALL BE AS FOLLOWS:
   ITEM 501.33, CONCRETE, HIGH PERFORMANCE CLASS A: DECK, CURTAIN WALLS AND CURB
   ITEM 501.34, CONCRETE, HIGH PERFORMANCE CLASS B: WING WALLS AND ABUTMENT AND PIER CAPS

2. ITEM 514.10, WATER REPELLENT, SHALL BE APPLIED TO ALL EXPOSED CONCRETE ON BRIDGE SUPERSTRUCTURE EXCEPT THE BOTTOM OF THE DECK BETWEEN THE DRIP NOTCHES. WATER REPELLENT SHALL ALSO BE APPLIED TO THE EXPOSED CONCRETE ON THE NEW AND EXISTING SUBSTRUCTURES.

3. ALL EXPOSED EDGES OF CONCRETE SHALL BE CHAMFERED 1 INCH BY 1 INCH, UNLESS OTHERWISE NOTED. A ONE-HALF INCH RADIUS SHALL BE USED ON THE TOP INSIDE CORNER OF THE CURBS.

4. JOINTS AND SCORE MARKS IN CONCRETE SHALL BE CONSTRUCTED AS INDICATED ON THE PLANS OR AS DIRECTED BY THE ENGINEER.

5. THE KEY IN CONCRETE CONSTRUCTION JOINTS SHALL BE MONOLITHIC AND CONTINUOUS FOR THE FULL LENGTH OF THE JOINT UNLESS OTHERWISE INDICATED. ANY UPWARD KEY SHALL BE PLACED INTEGRALLY WITH THE CONCRETE BELOW THE JOINT.

6. SEE DECK DETAILS SHEET 11 FOR DECK POUR SEQUENCE NOTES.

BEARING NOTES:

1. BEARINGS SHALL CONFORM TO APPLICABLE SUBSECTIONS OF SECTION 531 AND 731.

2. PREFORMED BEARING PAD DESIGN CRITERIA:

   A. ALLOWABLE BEARING PRESSURE ON CONCRETE = 1000 PSI
   B. MINIMUM ALLOWABLE DESIGN ROTATION = 0.015 RADIANS
   C. HORIZONTAL CAPACITY SHALL BE A MINIMUM OF 6% OF THE VERTICAL LOAD
   D. DESIGN LOAD PER BEARING: ABUTMENTS = 90 KIPS & PIER = 150 KIPS

3. SHOP DRAWINGS CONFORMING TO SUBSECTION 531.03 SHALL INCLUDE WELDING AND BONDING PROCEDURES.

4. ALL STEEL FOR SOLE PLATES AND WASHERS SHALL BE AASHTO M 270/M270 , GRADE 36, BOLTS AND NUTS SHALL BE PER ASTM A 449. ALL HARDWARE SHALL BE GALVANIZED PER THE SPECIFICATION AASHTO M 111M/M 111.

5. DRILL AND SET ANCHOR BOLTS WITH A MINIMUM OF 15 INCHES EMBEDDED INTO CONCRETE. HOLES FOR ANCHOR BOLTS SHALL BE 3 INCHES IN DIAMETER, IF ANCHOR BOLTS ARE TO BE GROUTED WITH MORTAR, TYPE IV AND 2-1/2 INCHES IN DIAMETER IF ANCHOR BOLTS ARE TO BE INSTALLED USING EPOXY MORTAR PER STANDARD SPECIFICATION 530. ALL COSTS SHALL BE INCLUDED IN ITEM 531.10, BEARING DEVICE ASSEMBLY.

6. ANCHOR BOLTS SHALL BE SWEDGED WITH 4 INCHES OF THREAD. EXPANSION BEARING NUTS ARE TO BE DRAWN UP FINGER TIGHT AND THEN BACKED OFF ONE-EIGHTH INCH. THREADS SHALL BE BURRED ABOVE NUT TO PREVENT NUT REMOVAL.

7. BLANK

8. EXISTING ANCHOR BOLTS THAT ARE NOT COVERED WITH A NEW BRIDGE SEAT CAP SHALL BE CUT ONE INCH MINIMUM BELOW EXISTING SUBSTRUCTURE SEATS, BLAST CLEANED AND FILLED WITH MORTAR TYPE IV. COSTS SHALL BE SUBSIDIARY TO ITEM 531.10, "BEARING DEVICE ASSEMBLY."

STRUCTURAL STEEL NOTES:

1. ALL NEW STRUCTURAL STEEL SHALL BE AASHTO M270, GRADE 50W UNLESS OTHERWISE NOTED.

2. BLANK

3. ALL BOLTED FIELD CONNECTIONS SHALL BE MADE WITH 7/8-INCH DIAMETER HIGH STRENGTH BOLTS IN 15/16-INCH DIAMETER HOLES UNLESS OTHERWISE NOTED.

4. CONNECTIONS NOT DESIGNED SHALL BE DETAILED BY THE FABRICATOR AND SUBMITTED TO THE ENGINEER FOR APPROVAL.

5. ALL WELDS SHALL HAVE CORROSION RESISTANCE AND WEATHERING APPEARANCE AS SPECIFIED FOR WEATHERING STEEL.

6. SHEAR STUD CONNECTORS SHALL BE FIELD WELDED USING AUTOMATICALLY TIMED STUD WELDING EQUIPMENT AND SHALL BE PAID AS ITEM 508.15, SHEAR CONNECTORS.

7. AFTER THE SUPERSTRUCTURE STEEL HAS BEEN ERECTED, ELEVATIONS ALONG THE TOP OF THE BEAM SHALL BE TAKEN, AS DIRECTED BY THE ENGINEER, FOR USE IN DETERMINING THE FINAL GRADE AND HAUNCH DEPTHS.

8. ANY HOLES IN FASCIA BEAM WEBS NOT OTHERWISE FILLED SHALL BE FILLED WITH BOLTS CONFORMING TO AASHTO M164 TYPE 3.

9. THE ENDS OF THE BEAMS SHALL BE VERTICAL UNDER FULL DEAD LOAD DEFLECTION.

TRAFFIC CONTROL NOTES:

1. THE CONTRACTOR SHALL BE RESPONSIBLE FOR ALL ON PROJECT CONSTRUCTION SIGNING, OFF PROJECT DETOUR SIGNING, AND BARRICADES. THE COSTS FOR REQUIRED ON PROJECT CONSTRUCTION SIGNING AND BARRICADES OTHER THAN TEMPORARY TRAFFIC BARRIERS SHALL BE INCIDENTAL TO OTHER ITEMS. THE COSTS FOR DETOUR SIGNING AND NECESSARY SIGN POSTS SHALL BE INCLUDED IN ITEM 641.10, "TRAFFIC CONTROL." THE CONTRACTOR SHALL PROVIDE ADEQUATE TEMPORARY CONCRETE TRAFFIC BARRIERS DURING THE CONSTRUCTION PERIOD TO PREVENT VEHICLES FROM DRIVING OFF THE BRIDGE OR APPROACHES. ALL COSTS SHALL BE INCLUDED IN ITEM 621.90, "TEMPORARY TRAFFIC BARRIER."

2. ALL CONSTRUCTION AND DETOUR SIGNING AND SIGN POSTS SHALL REMAIN THE PROPERTY OF THE CONTRACTOR.

3. THE CONTRACTOR SHALL MAINTAIN ACCESS TO ALL DRIVES AND SIDE ROADS DURING CONSTRUCTION. COSTS SHALL BE INCLUDED IN ITEM 641.10, "TRAFFIC CONTROL."

4. ALL DETOUR SIGNS SHALL BE ORANGE WITH BLACK LETTERING AND BLACK BORDERS.

5. ALL DETAILS NOT SPECIFIED SHALL BE IN ACCORDANCE WITH THE MUTCD AND VAOT E SERIES STANDARDS.

REINFORCING STEEL NOTES:

1. REINFORCING STEEL IN THE DECK, CURTAIN WALL, AND BRUSH CURBS SHALL BE EPOXY COATED.

2. EPOXY REINFORCING STEEL TO BE CUT IN THE FIELD SHALL BE SAW CUT AND THE EXPOSED ENDS TREATED. NO FLAME CUTTING SHALL BE PERMITTED.

3. MINIMUM CLEAR COVER FOR REINFORCING STEEL SHALL BE AS FOLLOWS:
   ALONG BACK FACES OF WALLS AGAINST EARTH: *2.0 INCHES
   ALONG TOP SURFACE OF DECK SLAB: 2.5 INCHES
   ALONG BOTTOM SURFACE OF DECK SLAB: 1.5 INCHES
   ELSEWHERE UNLESS OTHERWISE INDICATED: 3.0 INCHES

4. REINFORCEMENT STEEL PLACEMENT TOLERANCES SHALL BE:
   SPACING: +/- 1"
   CLEARANCE: +/-1/4".

5. DRILLING AND GROUTING DOWELS SHALL BE PAID AS ITEM 507.16, DRILLING AND GROUTING DOWELS. ALL DRILLED HOLES SHALL HAVE A MINIMUM OF 6-INCH CLEAR COVER.

6. THE WELDED WIRE STEEL FABRIC FOR THE NEW CAP ON ABUTMENT NO. 1 SHALL BE PAID FOR INCIDENTAL TO ITEM 501.34, "CONCRETE, HIGH PERFORMANCE CLASS B."

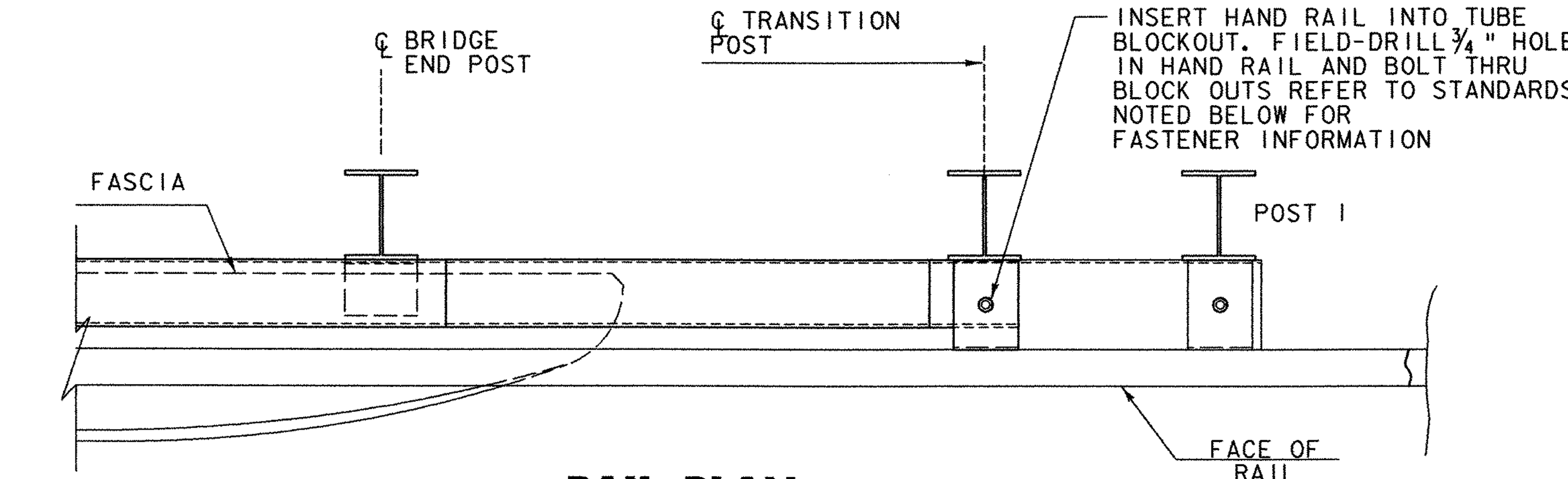

RAIL PLAN

NOTE:

1. SEE VAOT STANDARD SHEET SB-R6-86 AND SB-R7-90 FOR ADDITIONAL DETAILS.
2. FIELD DRILLED HOLES IN HAND RAIL SHALL BE GALVANIZED PER ASTM A 760.

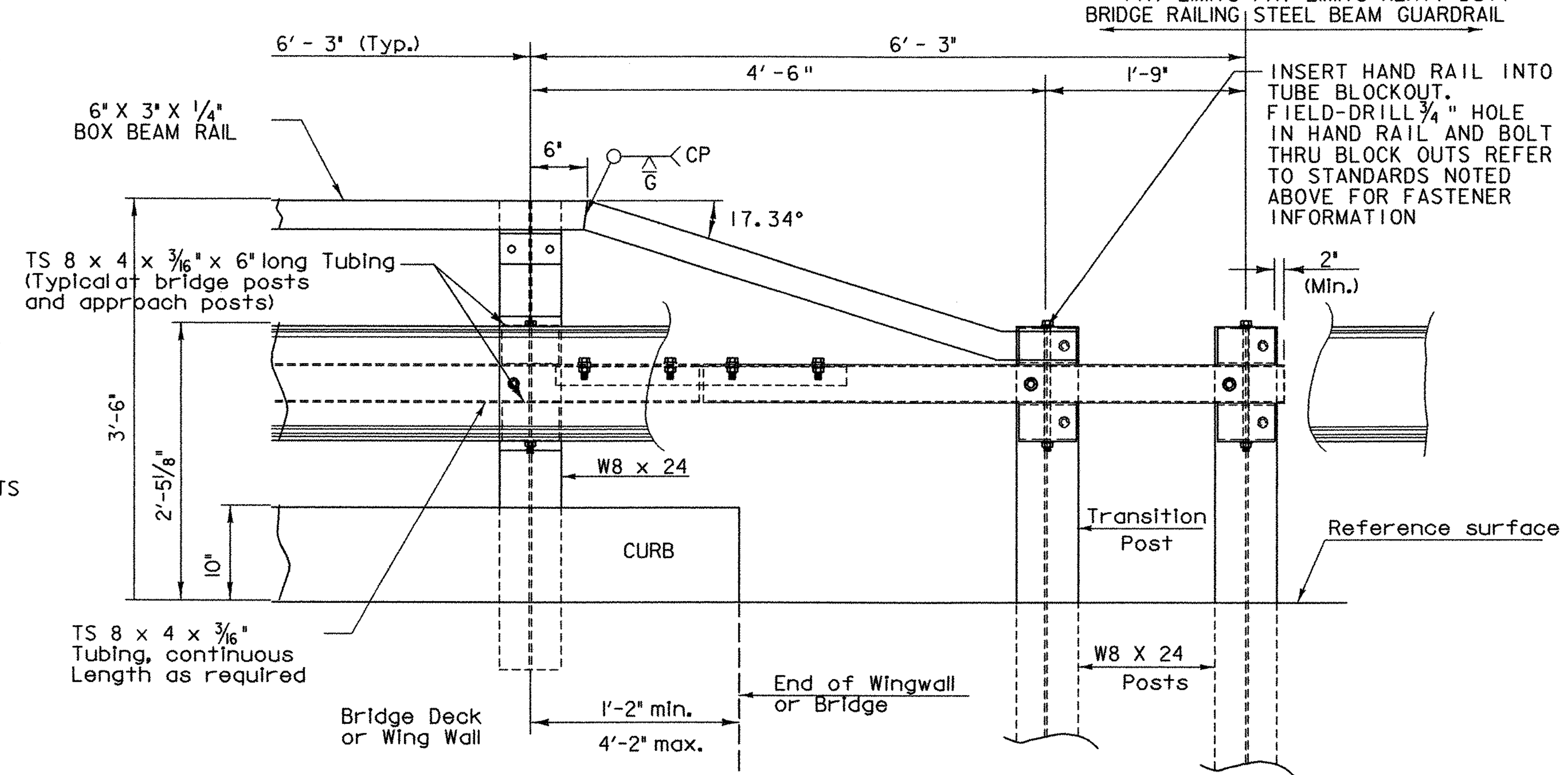

RAIL ELEVATION

REVISIONS		
NO.	DESCRIPTION	BY & DATE
1	MODIFIED NOTES TO REFLECT REVISONS TO PLANS	APG 2/3/04

DuBois & King inc.
engineering planning management development

STATE OF VERMONT
AGENCY OF TRANSPORTATION

Town Of	CHESTER	Bridge No.	11
		Log Sta.	-
Highway No.	TH 5	Surv. Sta.	-
CHURCH STREET OVER WILLIAMS RIVER			
CONSTRUCTION NOTES			
Designed By B. C. AUSTIN		Drawn By G. J. WOJCIECHOWSKI	
Checked By J. TUCKER	Date 03/01	Bridge Design Supervisor J. TUCKER	Date 03/01
PROJECT	CHESTER	PROJECT NO.	BHO 1442 (32)
I.G.C. Info.	...zj365gn10.dgn		
D & K DWG NO.	11353	Sheet 10 of 22	

I:\R16404\dgn\zj\xxxgn10.dgn 02/10/2004 01:13:37 PM

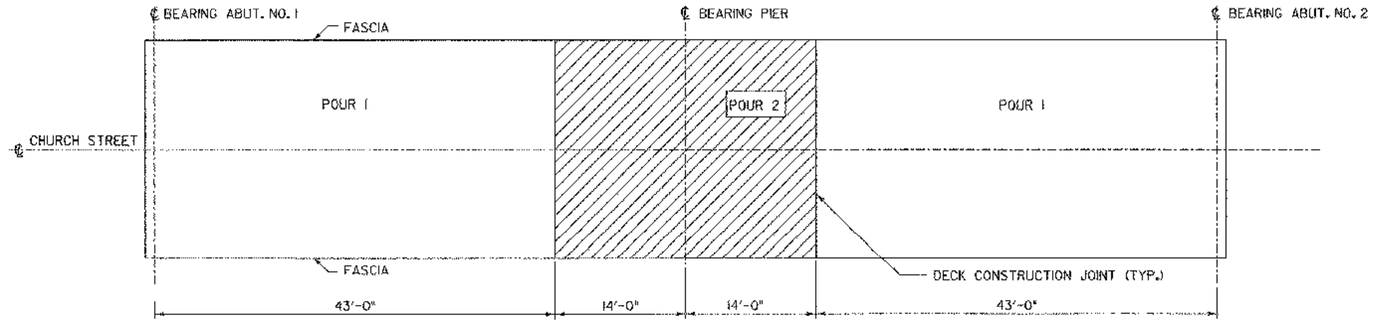

DECK POUR SEQUENCE

NTS

DECK POUR SEQUENCE NOTES:

1. EACH CONCRETE DECK POUR SHALL BE PLACED CONTINUOUSLY WITHIN ONE EIGHT HOUR WORKING DAY. THERE SHALL BE A MINIMUM DELAY PERIOD OF 96 HOURS AFTER COMPLETION OF EACH POUR BEFORE BEGINNING ANOTHER POUR. INDIVIDUAL POUR NUMBERS AS SHOWN MAY BE COMBINED INTO A SINGLE POUR IF APPROVED BY THE ENGINEER.

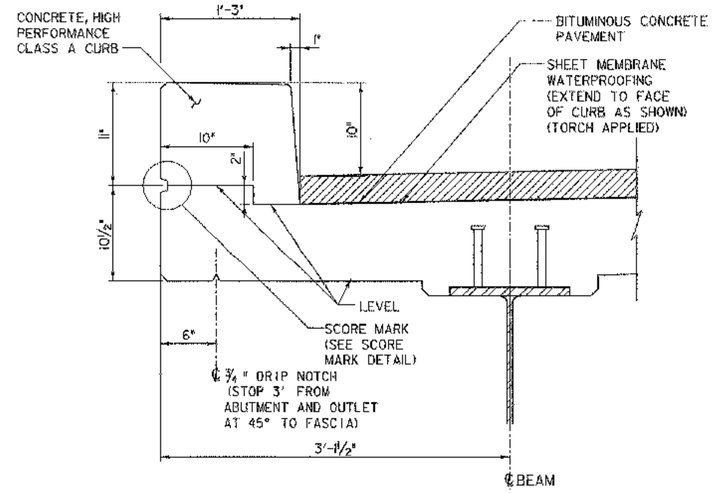

TYPICAL CURB DETAIL

SCALE 1½" = 1'-0

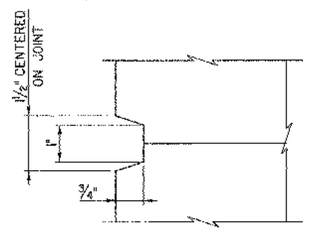

SCORE MARK DETAIL

NOT TO SCALE

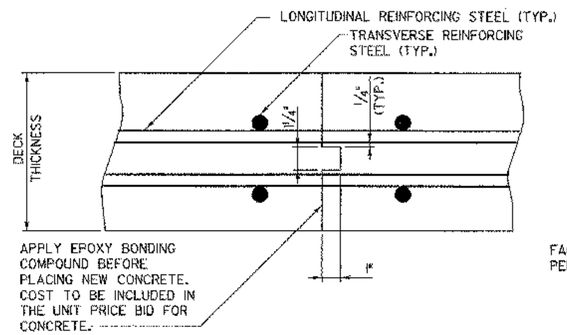

TRANSVERSE DECK CONSTRUCTION JOINT DETAIL

SCALE 3" = 1'-0

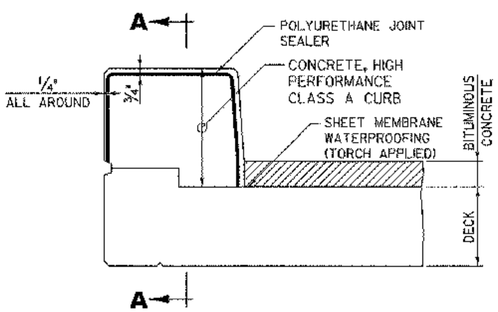

TYPICAL SECTION

CURB CONSTRUCTION JOINT NOTES:

1. POLYURETHANE MEMBRANE AND BLAST CLEANING SHALL BE INCLUDED IN THE UNIT PRICE BID FOR SHEET MEMBRANE WATERPROOFING.
2. JOINTS SHALL BE A SPACED MAXIMUM OF 15'-0" CENTER TO CENTER AND SHALL BE 1'-6" MINIMUM FROM THE CENTER OF THE NEAREST BRIDGE RAIL POST. CONCRETE SHALL BE PLACED IN ALTERNATING SECTIONS WITH A MINIMUM OF 48 HOURS DELAY BETWEEN ADJACENT POURS.
3. LONGITUDINAL REINFORCING SHALL PASS THROUGH CONCRETE CURB CONSTRUCTION JOINTS.

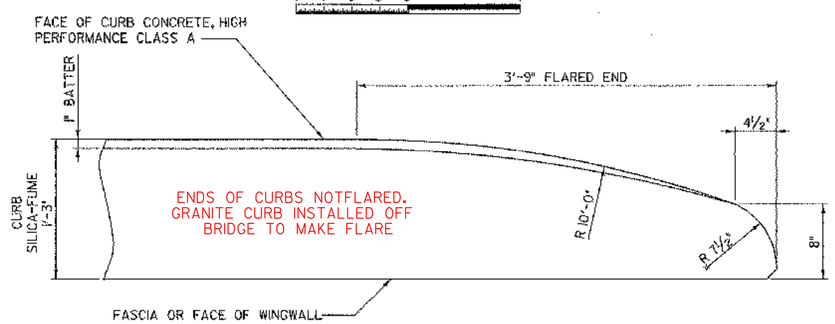

FLARED END DETAIL FOR 1'-3" CURB

CURB REINFORCING STIRRUP BARS SHALL BE TURNED AS REQUIRED TO FIT FLARED ENDS.

NOTES:

1. SEE STANDARD SB-R6-82, SB-R7-90 AND SHEET 10 FOR BRIDGE RAILING DETAILS.
2. BLAST CLEAN 3 FEET FROM FACE OF CURB AND 3 INCHES UP CURB FACE PRIOR TO PLACING MEMBRANE.

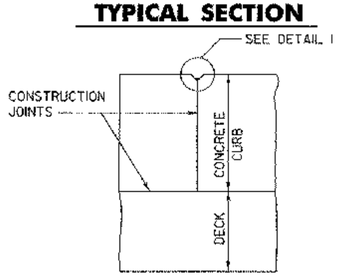

SECTION A-A

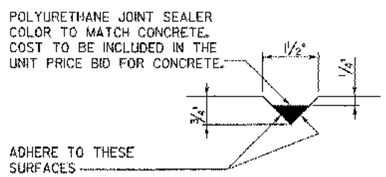

DETAIL 1

CONCRETE CURB CONSTRUCTION JOINT

NOT TO SCALE

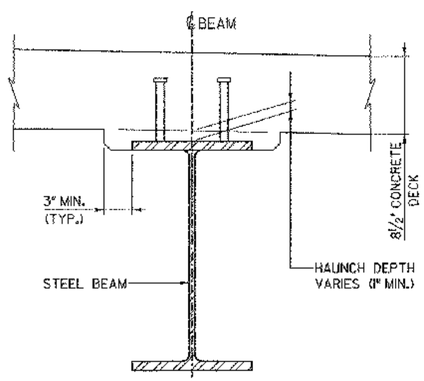

HAUNCH DETAIL

SCALE 1½" = 1'-0

02/03/2004

REVISIONS		
NO.	DESCRIPTION	BY & DATE

DuBois & King inc.
engineering planning management development

STATE OF VERMONT
AGENCY OF TRANSPORTATION

Town Of	CHESTER	Bridge No.	11
		Log Sta.	-
Highway No.	TH 5	Surv. Sta.	-

CHURCH STREET OVER WILLIAMS RIVER

DECK DETAILS

Designed By B. C. AUSTIN		Drawn By G. J. WOJCIECHOWSKI	
Checked By J. TUCKER	Date 03/01	Bridge Design Supervisor J. TUCKER	Date 03/01
PROJECT CHESTER		PROJECT NO. BHO 1442 (32)	
I.G.C. Info.	...zj365dll.dgn		
D & K DWG NO. 11354		Sheet 11 of 22	

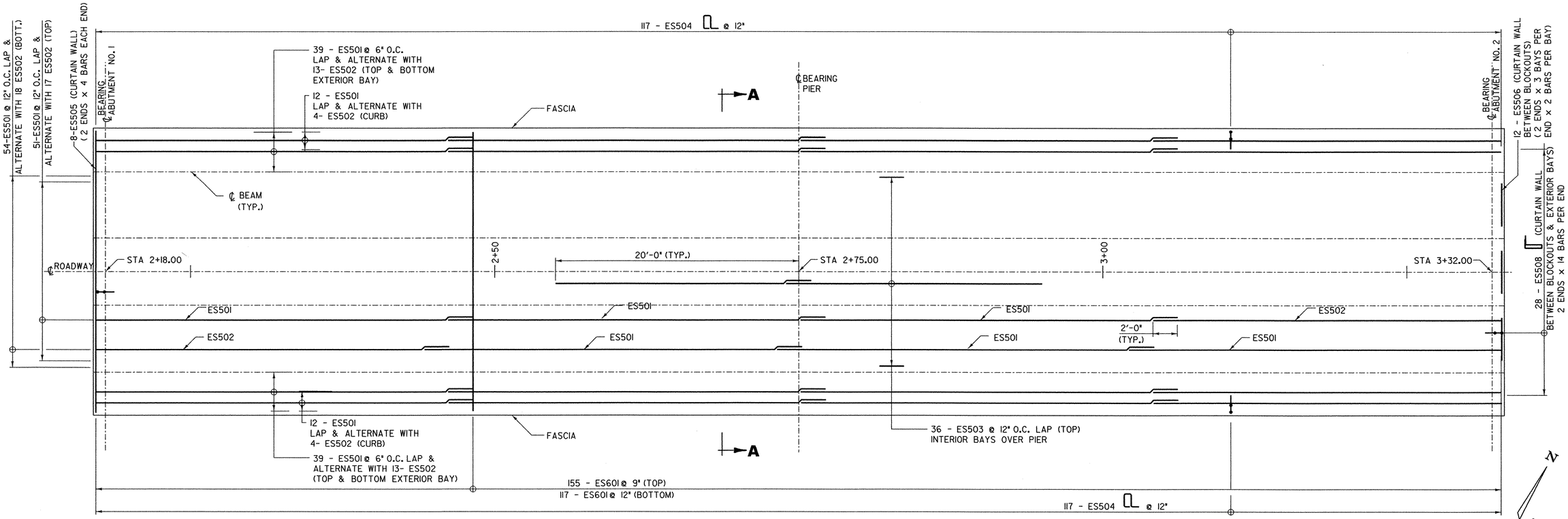

PLAN

SCALE 1/4" = 1'-0

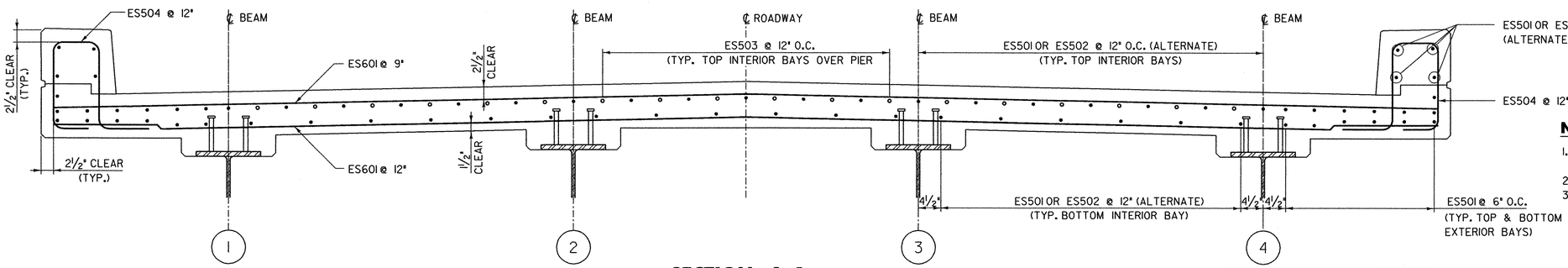

SECTION A-A

SCALE 1" = 1'-0

NOTES:

1. SEE SHEET 10 AND STND. SB-R6-82 AND SB-R7-90 FOR BRIDGE RAILING DETAILS.
2. SEE SHEET 13 FOR CURTAIN WALL REINFORCEMENT DETAILS.
3. NO SPLICES FOR DECK TRANSVERSE REINFORCING STEEL (TOP AND BOTTOM) SHALL BE ALLOWED.

KEY

N.F. = NEAR FACE
F.F. = FAR FACE
E.F. = EACH FACE
▲ = CUT TO FIT IN FIELD

02/03/2004

REVISIONS		
NO.	DESCRIPTION	BY & DATE

DuBois & King inc.
engineering planning management development

STATE OF VERMONT
AGENCY OF TRANSPORTATION

Town Of	CHESTER	Bridge No.	11
		Log Sta.	-
Highway No.	TH 5	Surv. Sta.	-

CHURCH STREET OVER WILLIAMS RIVER

DECK REINFORCEMENT

Designed By B. C. AUSTIN		Drawn By G. J. WOJCIECHOWSKI	
Checked By J. TUCKER	Date 03/01	Bridge Design Supervisor J. TUCKER	Date 03/01
PROJECT CHESTER		PROJECT NO. BHO 1442 (32)	
I.G.C. Info. ...zj365d12.dgn			
D & K DWG NO. 11355		Sheet 12 of 22	

I:\DESIGN\BRIDGE\ZJ365\ZJ365D12.DGN 02/03/2004 02:29:15 AM

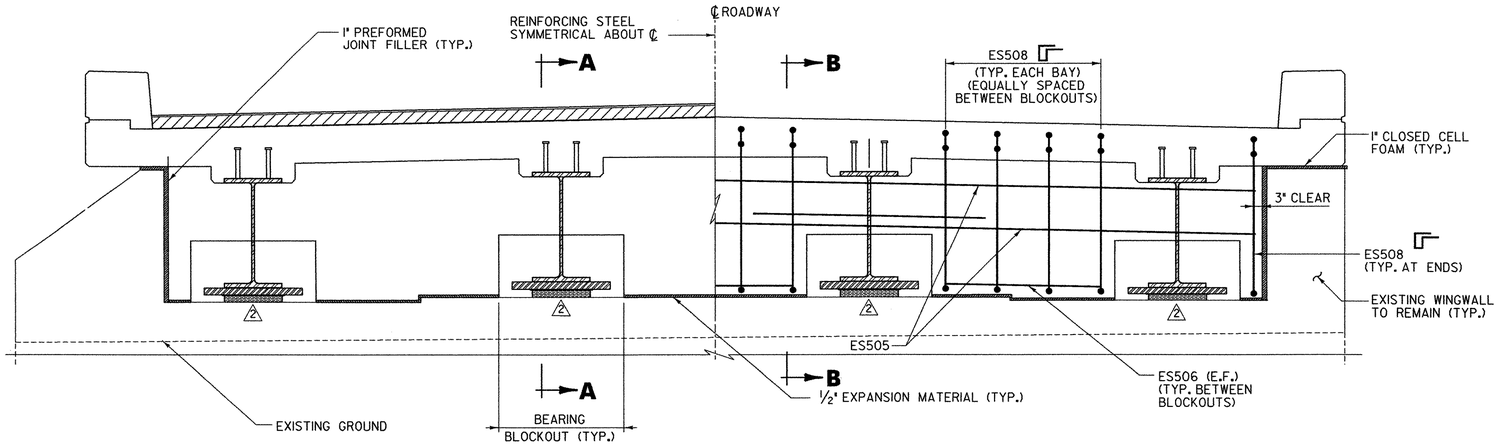

CURTAIN WALL ELEVATION

SCALE 3/4" = 1'-0

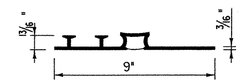

P. V. C. WATERSTOP FOR EXPANSION END

NOTE: FOR INSTALLATION, REMOVE BOTTOM HOOKS. THE COSTS FOR P. V. C. WATERSTOP SHALL BE INCLUDED IN THE UNIT PRICE BID FOR CONCRETE.

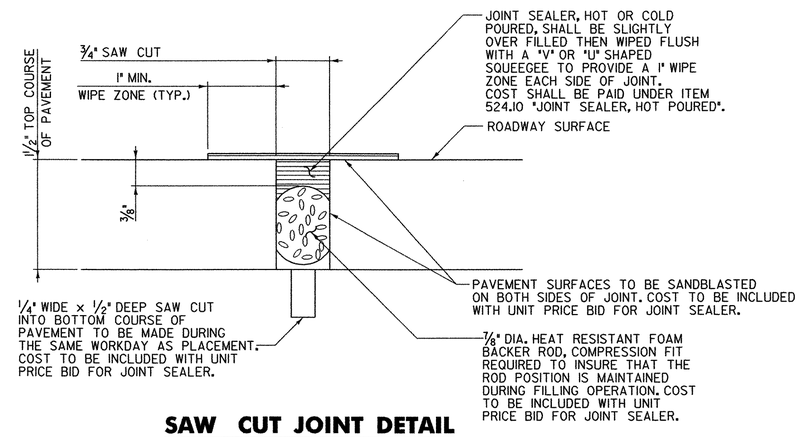

SAW CUT JOINT DETAIL

N.T.S.

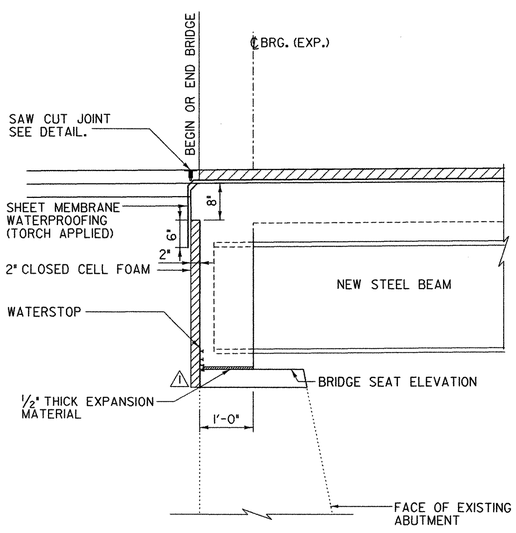

SECTION A–A

SCALE 3/4" = 1'-0

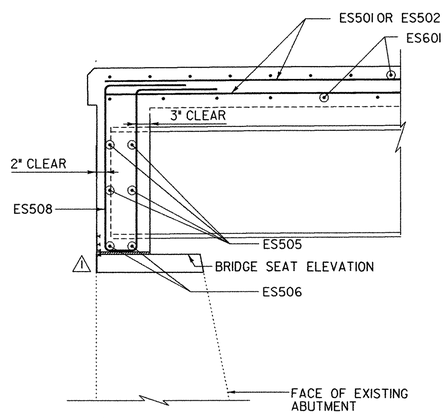

SECTION B–B

SCALE 3/4" = 1'-0

02/10/2004

REVISIONS		
NO.	DESCRIPTION	BY & DATE
1	ADDED ABUTMENT CAP TO ABUTMENT SECTIONS	APG 2/3/04
2	REMOVED SHIM PLATE FROM BEARING ASSEMBLY IN CURTAIN WALL ELEVATION	APG 2/3/04

DuBois & King inc.
engineering planning management development

STATE OF VERMONT
AGENCY OF TRANSPORTATION

Town Of CHESTER		Bridge No. 11	
Highway No. TH 5		Log Sta. -	Surv. Sta. -
CHURCH STREET OVER WILLIAMS RIVER			
CURTAIN WALL DETAILS			
Designed By G. J. WOJCIECHOWSKI		Drawn By G. J. WOJCIECHOWSKI	
Checked By J. TUCKER	Date 03/01	Bridge Design Supervisor J. TUCKER	Date 03/01
PROJECT CHESTER		PROJECT NO. BHO 1442 (32)	
I.G.C. Info. ...zj365dl3.dgn			
D & K DWG NO. 11356		Sheet 13 of 22	

02/10/2004 11:32:38 AM

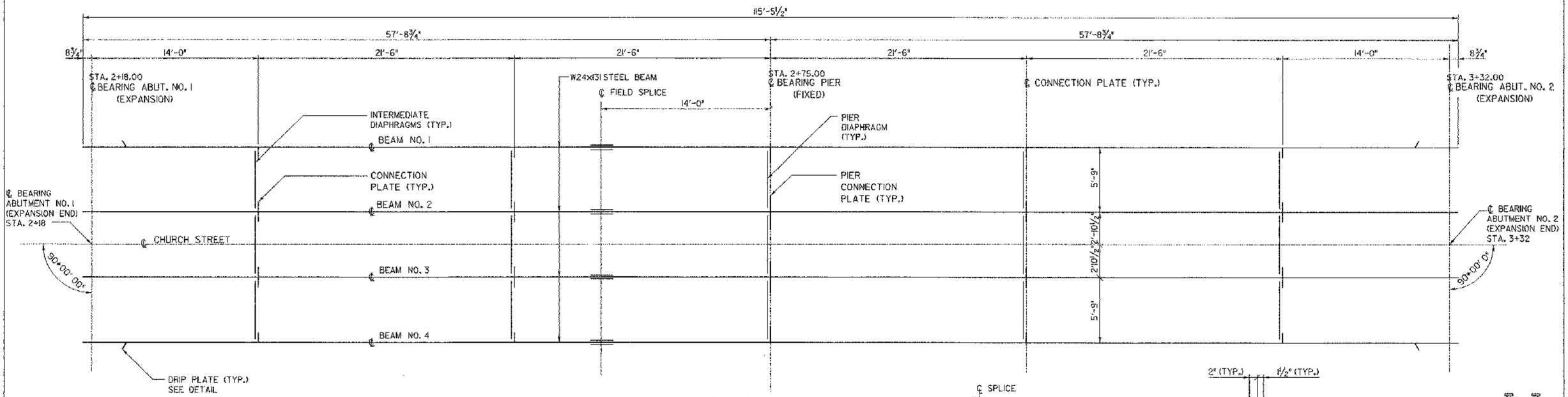

FRAMING PLAN

SCALE ¼" = 1'-0

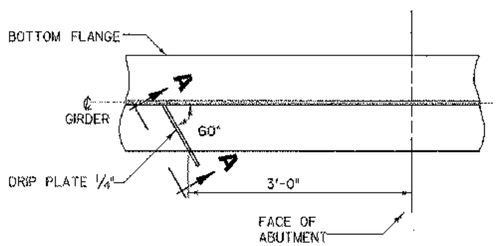

PLAN

NOTE:
DRIP PLATES SHALL BE PLACED ON OUTSIDE EDGE OF FASCIA GIRDERS ON THE HIGH SIDE OF BOTH ABUTMENTS AS INDICATED ON PROJECT PLANS.

DRIP PLATE DETAIL

N.T.S.

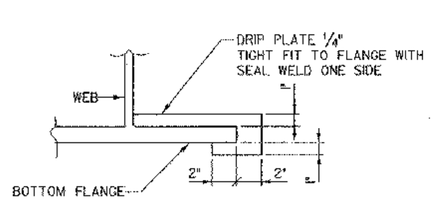

SECTION A - A

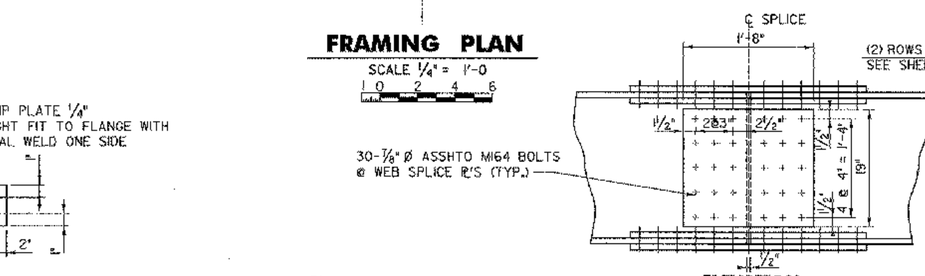

ELEVATION

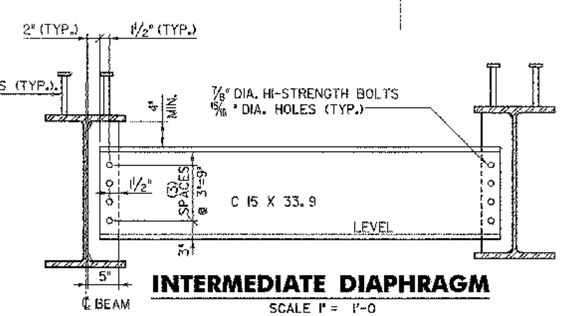

INTERMEDIATE DIAPHRAGM

SCALE 1" = 1'-0

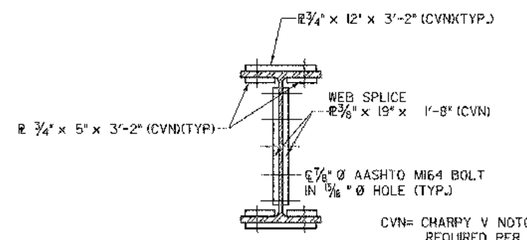

SECTION

CVN= CHARPY V NOTCH TESTING REQUIRED PER SPECIFICATION

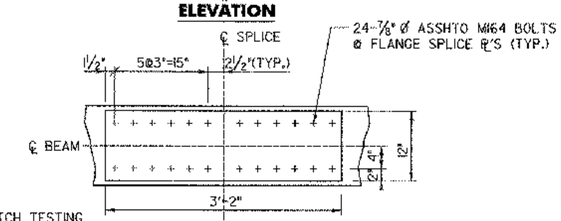

PLAN

(TOP + BOTTOM FLANGE)

SPLICE DETAILS

SCALE 1" = 1'-0

PIER DIAPHRAGMS

SCALE 1" = 1'-0

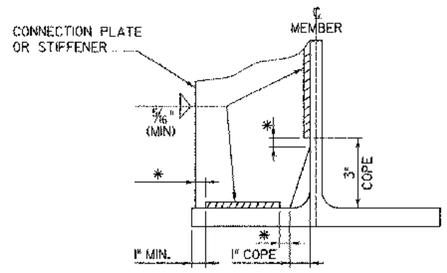

* NO WELD FOR ¼" MIN. ½" MAX.
(EXCEPT MUST MAINTAIN 1" MINIMUM FROM EDGE OF FLANGE)

WELD TERMINATION AND COPING DETAILS FOR STEEL BEAMS

N.T.S.

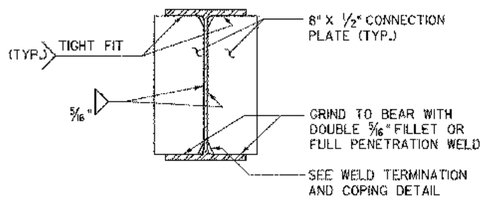

PIER CONNECTION PLATE DETAIL

SCALE 1" = 1'-0

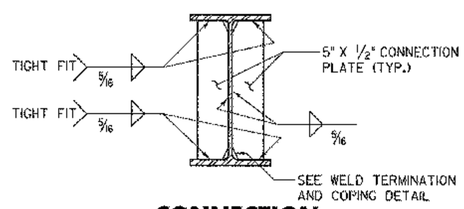

CONNECTION PLATE DETAIL

SCALE 1" = 1'-0

02/03/2004

REVISIONS		
NO.	DESCRIPTION	BY & DATE

DuBois & King inc.
engineering planning management development

STATE OF VERMONT
AGENCY OF TRANSPORTATION

Town Of	CHESTER	Bridge No.	11
Highway No.	TH 5	Log Sta.	-
		Surv. Sta.	-

CHURCH STREET OVER WILLIAMS RIVER

FRAMING PLAN & DETAILS

Designed By	R. L. JOY	Drawn By	G. J. WOJCIECHOWSKI
Checked By	J. TUCKER	Bridge Design Supervisor	J. TUCKER
Date	03/01	Date	03/01
PROJECT	CHESTER	PROJECT NO.	BHO 1442 (32)
I.C.C. Info.	...zj365d14.dgn		
D & K DWG NO.	11357	Sheet 14 of 22	

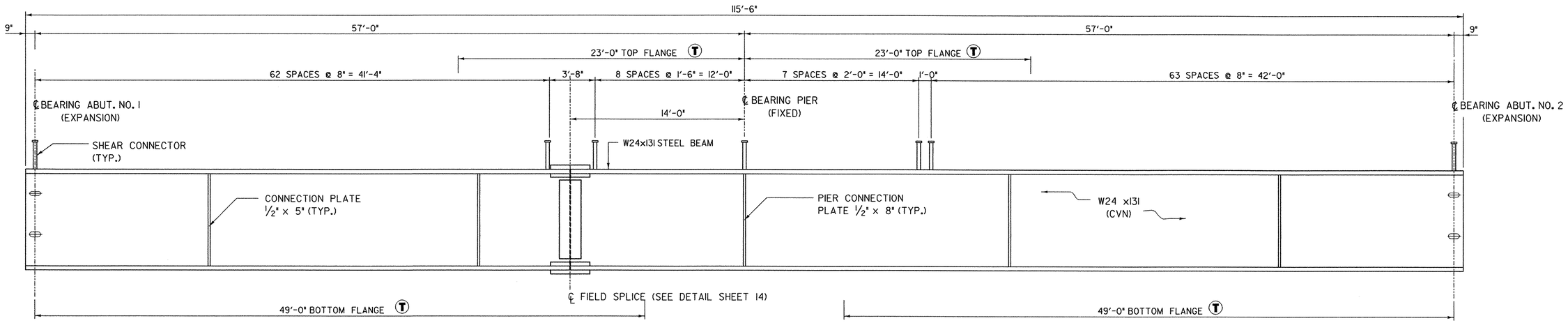

(T) INDICATES RANGE OF TENSION ZONE

CVN = CHARPY V NOTCH TESTING REQUIRED PER SPECIFICATION

BEAM ELEVATION

N.T.S.

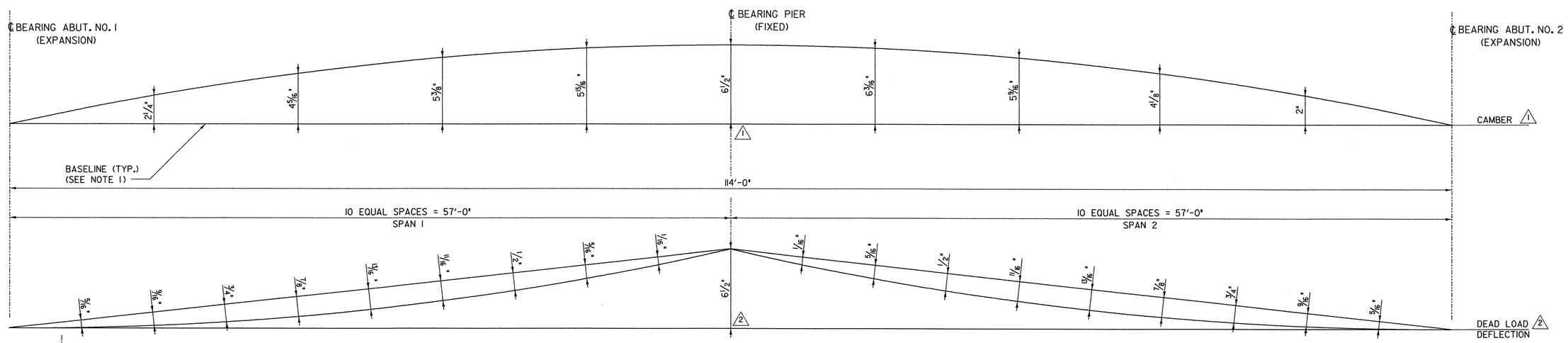

DEAD LOAD DEFLECTION AND CAMBER DIAGRAM

2 N.T.S. 1

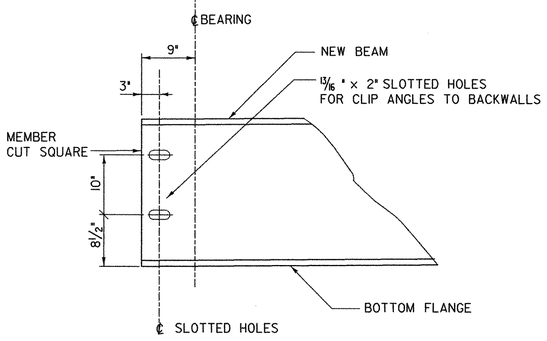

ELEVATION VIEW END OF STEEL BEAM AT ABUTMENT

SCALE 1" = 1'-0

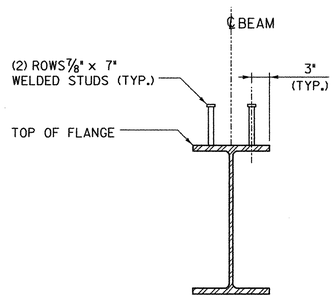

SHEAR CONNECTOR DETAIL

SCALE 1" = 1'-0

NOTES:

1. THE BASELINE IS NOT HORIZONTAL BUT IS FROM BOTTOM OF BEAM TO BOTTOM OF BEAM BETWEEN ABUTMENT SUPPORTS. THE SLOPE OF BASELINE DIFFERS FOR SPAN 1 AND SPAN 2.
2. THE DEAD LOAD DEFLECTION DIAGRAM INCLUDES BEAM SELF WEIGHT.

02/10/2004

REVISIONS		
NO.	DESCRIPTION	BY & DATE
1	REVISED CAMBER DIAGRAM	APG 2/3/04
2	REVISED DEAD LOAD DEFLECTION DIAGRAM	APG 2/3/04

DuBois & King inc.
engineering planning management development

STATE OF VERMONT
AGENCY OF TRANSPORTATION

Town Of	CHESTER	Bridge No.	11
		Log Sta.	-
Highway No.	TH 5	Surv. Sta.	-
CHURCH STREET OVER WILLIAMS RIVER			
BEAM ELEVATION & DETAILS			
Designed By R. L. JOY		Drawn By G. J. WOJCIECHOWSKI	
Checked By J. TUCKER	Date 03/01	Bridge Design Supervisor J. TUCKER	Date 03/01
PROJECT CHESTER		PROJECT NO. BHO 1442 (32)	
I.G.C. Info. ...zj365d15 .dgn			
D & K DWG NO. 11358		Sheet 15 of 22	

I:\RESEARCH\proj\zxxd15.dgn 02/10/2004 01:55:32 PM

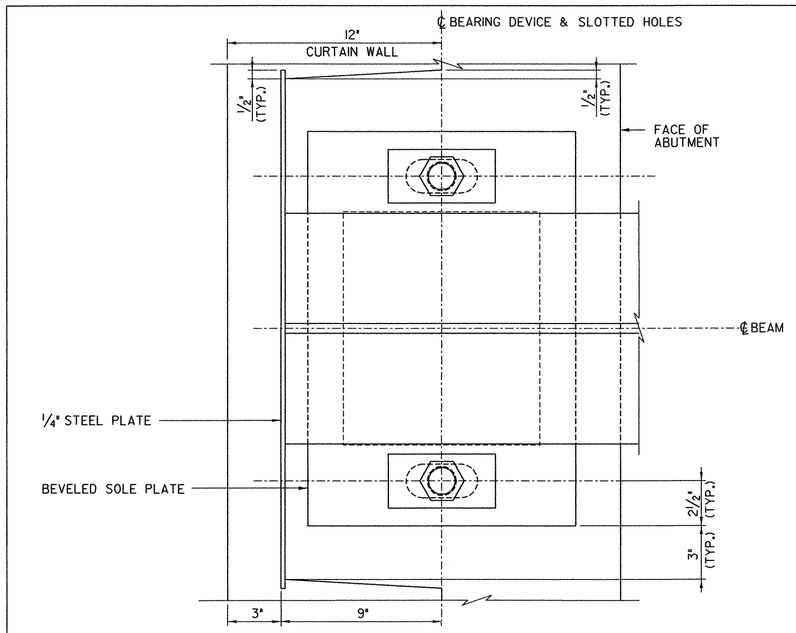

PLAN

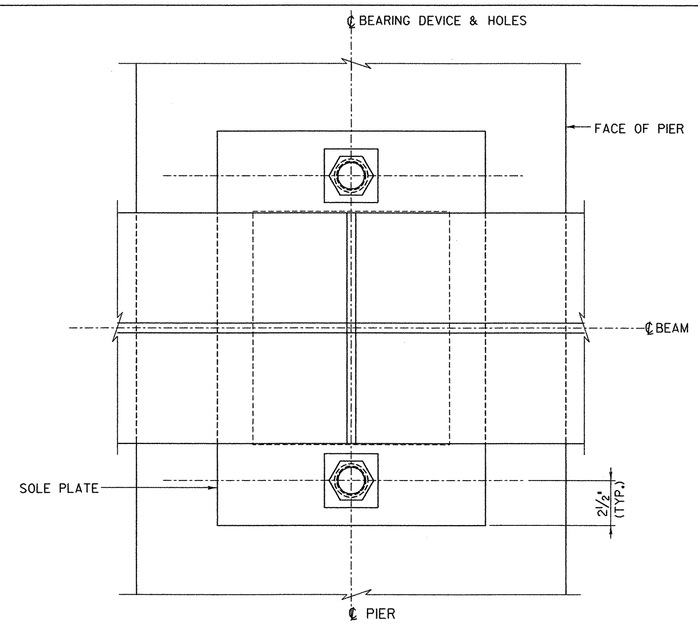

PLAN

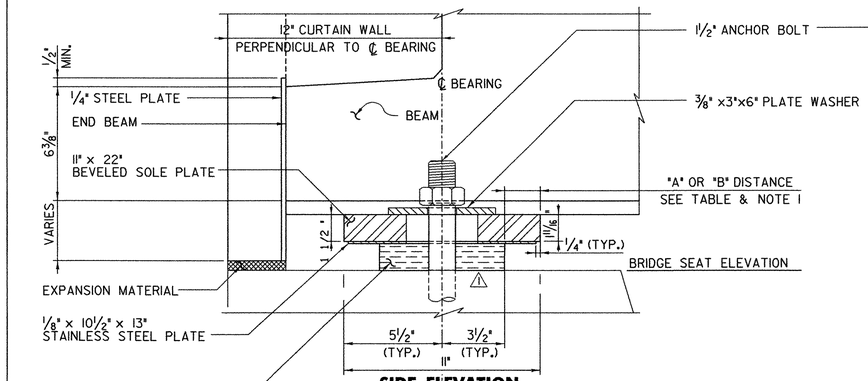

SIDE ELEVATION

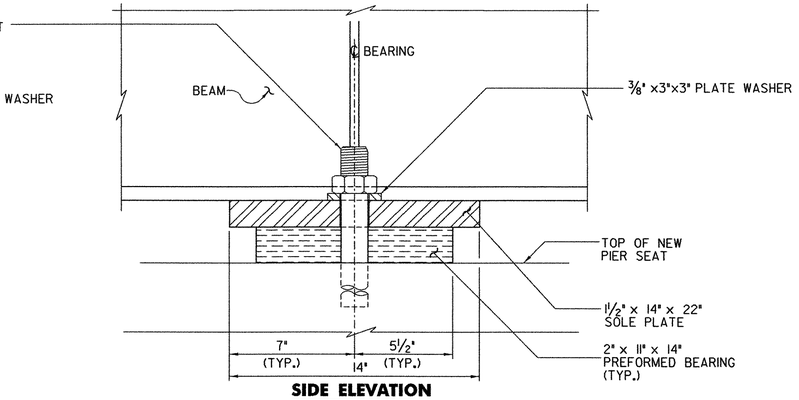

SIDE ELEVATION

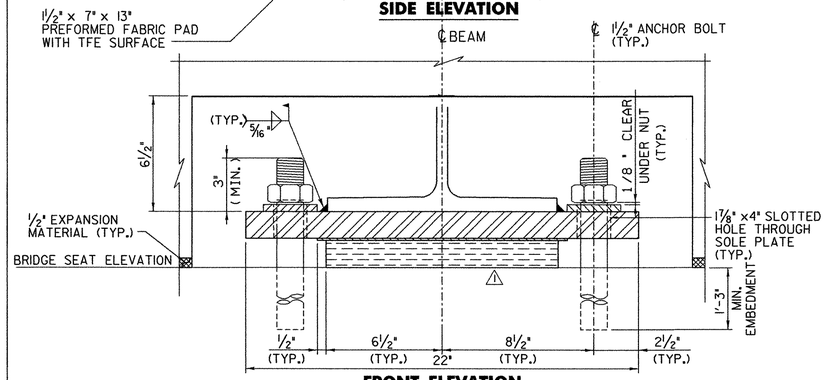

FRONT ELEVATION

EXPANSION BEARING DETAILS

(ABUTMENT. NO. 1 SHOWN, ABUTMENT NO. 2 SIMILAR)

SCALE 3" = 1'-0

1 9 6 3 0 1

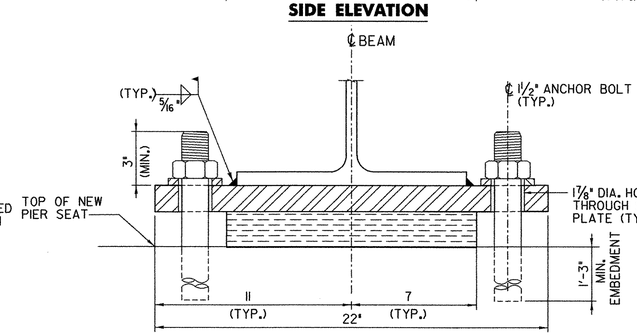

FRONT ELEVATION

FIXED BEARING DETAILS

(PIER)

SCALE 3" = 1'-0

1 9 6 3 0 1

02/10/2004

TEMPERATURE ADJUSTMENT TABLE

TEMP °F	"A" DIST. (INCHES)	"B" DIST. (INCHES)
120	1 5/8	1 3/4
105	1 3/4	1 7/8
90	1 3/4	1 7/8
75	1 7/8	2
60	1 7/8	2
45	2	2 1/8
30	2 1/8	2 1/8
15	2 1/8	2 1/4
0	2 1/4	2 1/4
-15	2 1/4	2 3/8
-30	2 3/8	2 3/8

NOTE:

1. THE "A" DISTANCE IS THE SOLE PLATE ADJUSTMENT TO BE USED AFTER THE DEAD LOAD IS ADDED TO THE BEAM SELF WEIGHT. THE "B" DISTANCE IS THE SOLE PLATE ADJUSTMENT TO BE USED AFTER BEAM ERECTION AND BEFORE DECK IS POURED. THE DIFFERENCE IS THE ELONGATION OF THE BOTTOM FLANGE DUE TO DEAD LOAD DEFLECTION FROM THE SLAB, BRUSH CURB, BRIDGE RAIL, AND PAVEMENT.
2. SEE SHEET 10 FOR ADDITIONAL BEARING NOTES.

REVISIONS

NO.	DESCRIPTION	BY & DATE
1	REMOVED SHIM PLATE FROM BEARING ASSEMBLY	APG 2/3/04

DuBois & King inc.
engineering planning management development

STATE OF VERMONT
AGENCY OF TRANSPORTATION

Town Of	CHESTER	Bridge No.	11
		Log Sta.	-
Highway No.	TH 5	Surv. Sta.	-

CHURCH STREET OVER WILLIAMS RIVER

BEARING DETAILS

Designed By R. L. JOY		Drawn By G. J. WOJCIECHOWSKI	
Checked By J. TUCKER	Date 03/01	Bridge Design Supervisor J. TUCKER	Date 03/01
PROJECT CHESTER		PROJECT NO. BHO 1442 (32)	
I.G.C. Info.	...zj365dl6.dgn		
D & K DWG NO. 11359		Sheet 16 of 22	

I:\7164\dgn\21xxxb16.dgn 02/10/2004 12:02:48 PM

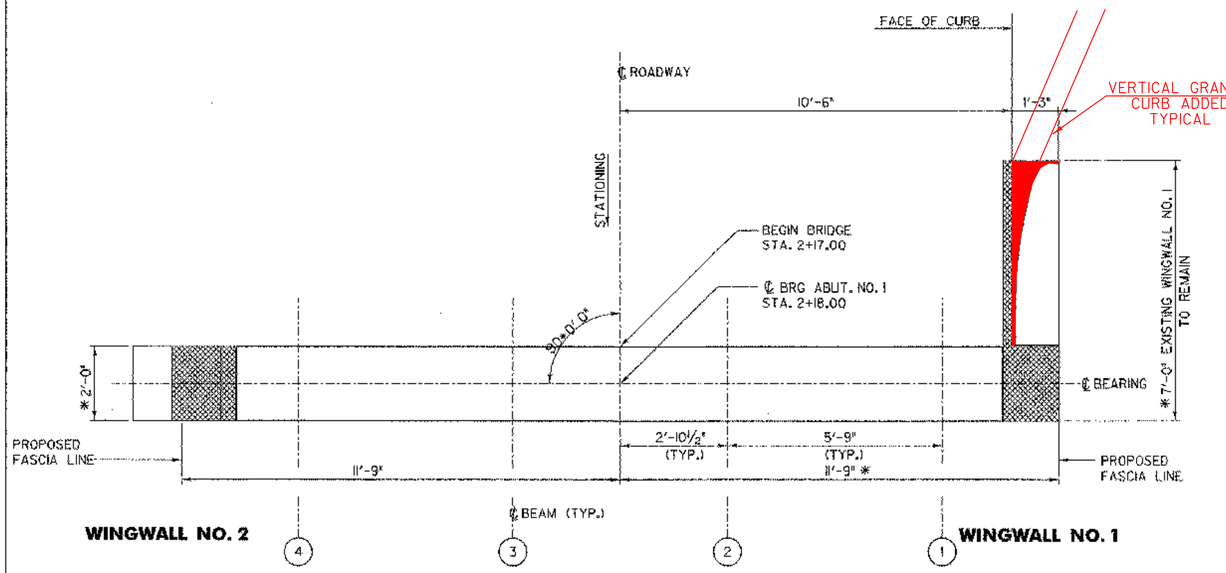

ABUTMENT NO. 1 – PLAN

SCALE ½" = 1'-0

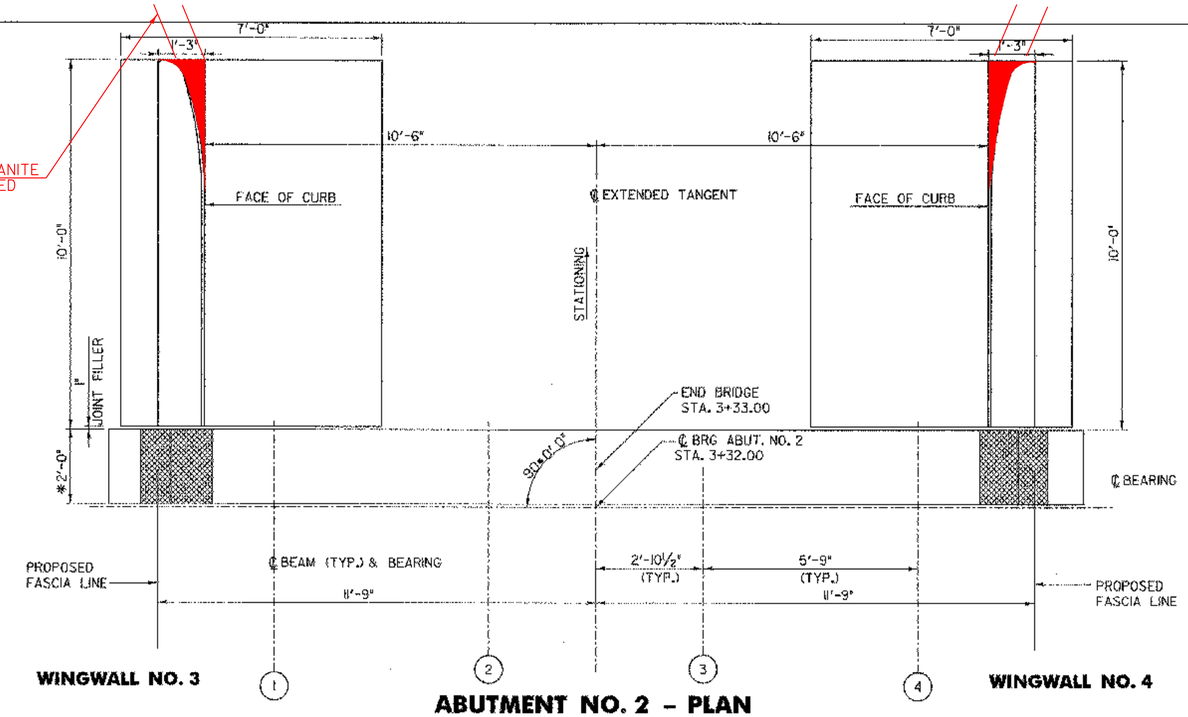

ABUTMENT NO. 2 – PLAN

SCALE ½" = 1'-0

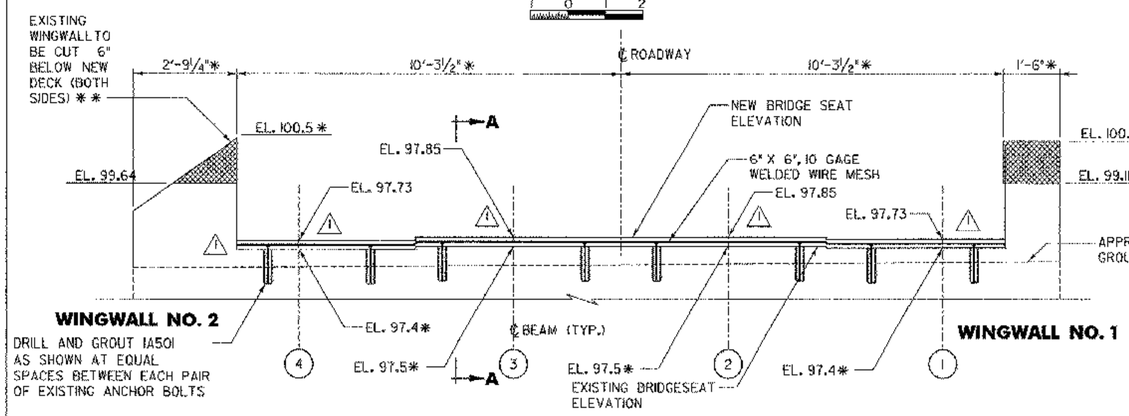

ABUTMENT NO. 1 – ELEVATION

SCALE ½" = 1'-0

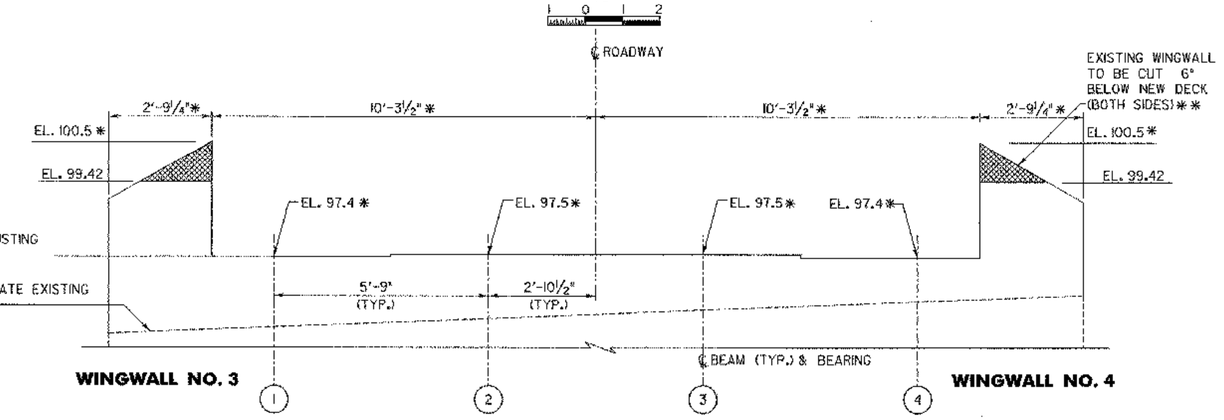

ABUTMENT NO. 2 – ELEVATION

SCALE ½" = 1'-0

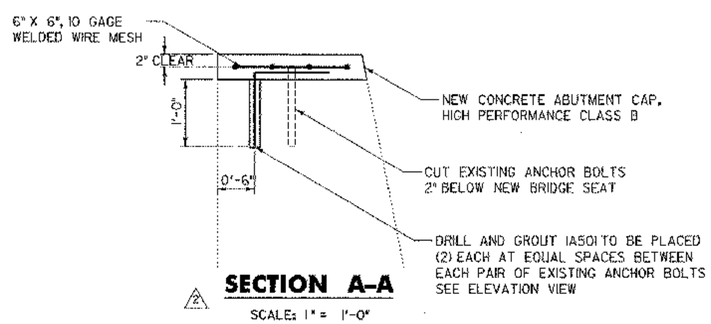

SECTION A–A

SCALE: 1" = 1'-0"

DENOTES LIMITS OF REMOVAL

* APPROXIMATE EXISTING ELEVATION OR DIMENSION

** TOPS OF EXISTING WINGWALLS SHALL BE REMOVED TO 6" MIN. BELOW THE ANTICIPATED BOTTOM OF NEW DECK. CONCRETE, HIGH PERFORMANCE CLASS B SHALL BE PLACED TO BRING THE TOP OF THE WINGWALL TO 1 INCH BELOW THE COMPUTED BOTTOM OF DECK. RETAIN EXISTING REINFORCING, SEE REMOVAL NOTES SHEET 10. 1" INCH CLOSED CELL FOAM WILL BE PLACED ON TOP OF THE NEW WINGWALL CONCRETE BEFORE THE NEW DECK IS POURED.

02/13/2004

REVISIONS

NO.	DESCRIPTION	BY & DATE
1	ADDED ABUTMENT CAP AND MODIFIED BRIDGE SEAT ELEVATIONS OF ABUTMENT NO. 1 ELEVATION	APG 2/3/04
2	ADDED SECTION A-A	APG 2/3/04

DuBois & King inc.
engineering planning management development

STATE OF VERMONT
AGENCY OF TRANSPORTATION

Town Of	CHESTER	Bridge No.	11
Highway No.	TH 5	Log Sta.	-
		Surv. Sta.	-

CHURCH STREET OVER WILLIAMS RIVER

ABUTMENTS DETAILS

Designed By J. W. KAMB		Drawn By G. J. WOJCIECHOWSKI	
Checked By J. TUCKER	Date 03/01	Bridge Design Supervisor J. TUCKER	Date 03/01
PROJECT CHESTER		PROJECT NO. BHO 1442 (32)	
L.G.C. Info.	...zj365d17.dgn		
D & K DWG NO. 11360		Sheet 17 of 22	

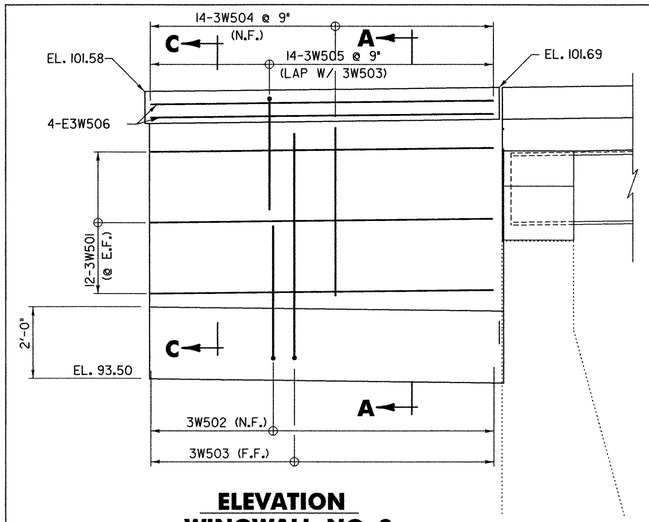

ELEVATION WINGWALL NO. 3

SCALE 1/2" = 1'-0

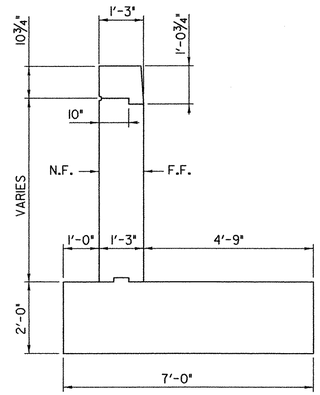

SECTION A-A

SCALE 1/2" = 1'-0

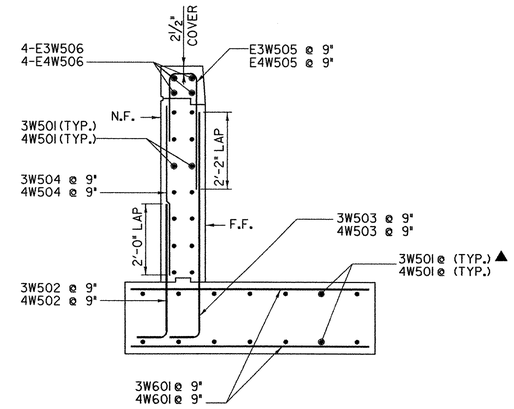

SECTION A-A

SCALE 1/2" = 1'-0

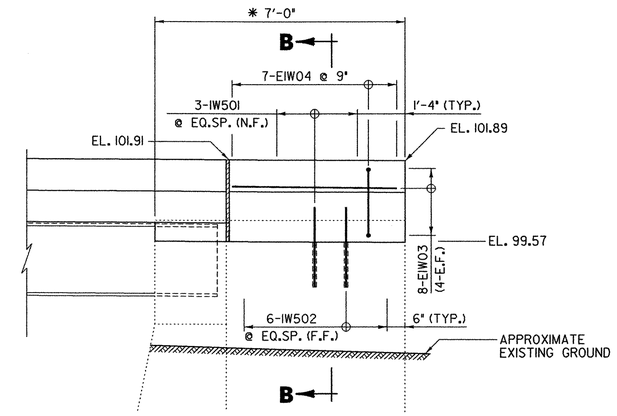

ELEVATION WINGWALL NO. 1

SCALE 1/2" = 1'-0

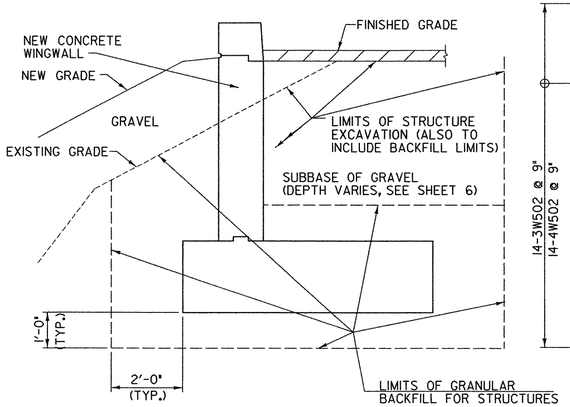

TYPICAL WINGWALL EARTHWORK SECTION

SCALE 1/2" = 1'-0

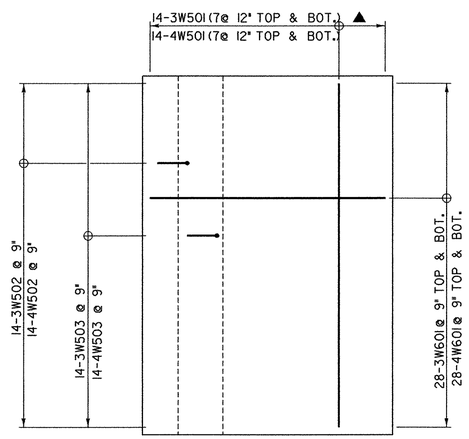

FOOTING PLAN

SCALE 1/2" = 1'-0

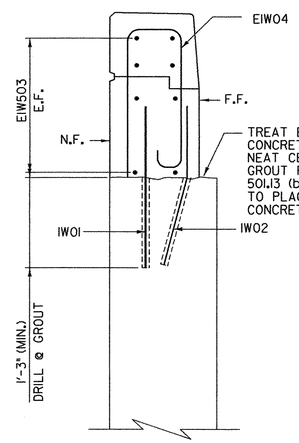

SECTION B-B

SCALE 1" = 1'-0

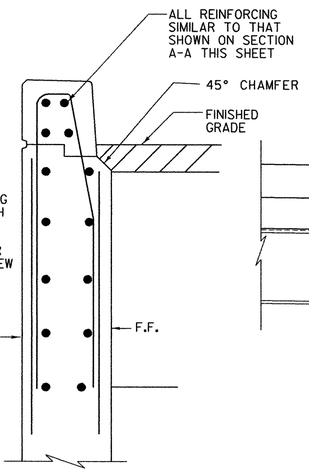

SECTION C-C

SCALE 1" = 1'-0

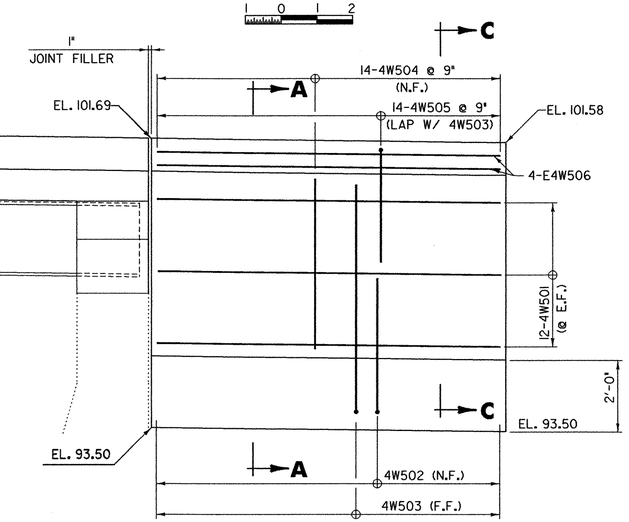

ELEVATION WINGWALL NO. 4

SCALE 1/2" = 1'-0

CURB REINFORCING STIRRUP BARS SHALL BE TURNED
AS REQUIRED TO FIT FLARED ENDS. SEE ALSO SECTION C-C.

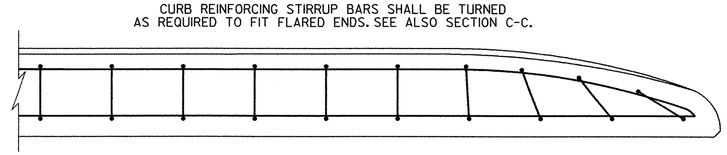

FLARED END DETAIL FOR 1'-3" CURB

SCALE 1" = 1'-0

* - APPROXIMATE EXISTING ELEVATION OR DIMENSION
F.F. - FAR FACE
N.F. - NEAR FACE
EQ.SP. - EQUAL SPACE

02/03/2004

REVISIONS		
NO.	DESCRIPTION	BY & DATE

DuBois & King inc.
engineering planning management development

STATE OF VERMONT
AGENCY OF TRANSPORTATION

Town Of	CHESTER	Bridge No.	11
		Log Sta.	-
Highway No.	TH 5	Surv. Sta.	-

CHURCH STREET OVER WILLIAMS RIVER

WINGWALL DETAILS

Designed By B. C. AUSTIN		Drawn By G. J. WOJCIECHOWSKI	
Checked By J. TUCKER	Date 03/01	Bridge Design Supervisor J. TUCKER	Date 03/01
PROJECT CHESTER		PROJECT NO. BHO 1442 (32)	
I.G.C. Info. ...zj365d18.dgn			
D & K DWG NO. 11361		Sheet 18 of 22	

I:\365d18\dgn\zjxwd18.dgn 02/03/2004 08:31:48 AM

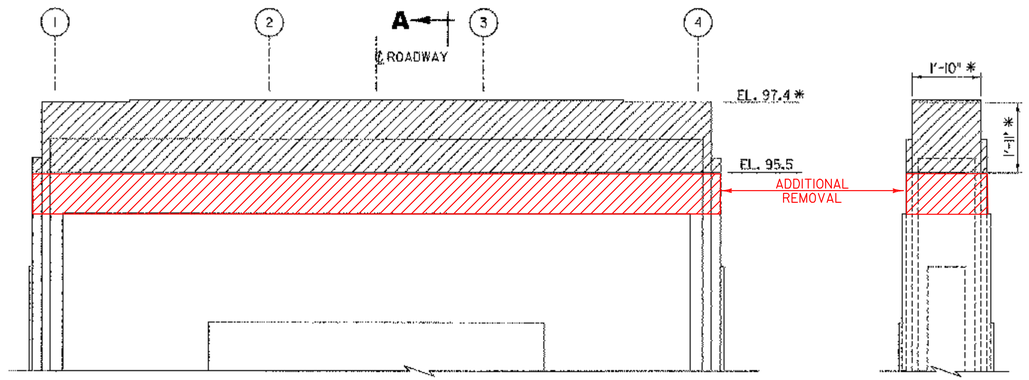

ELEVATION – REMOVAL

SCALE ½" = 1'-0

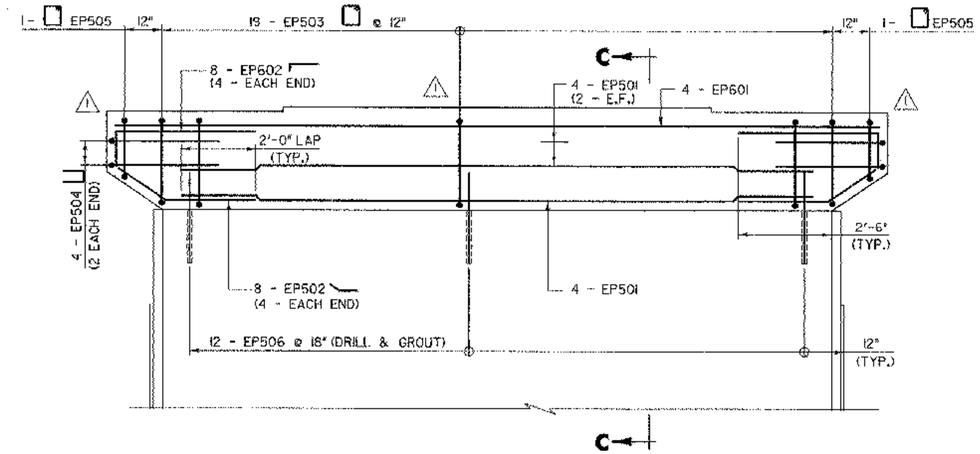

ELEVATION – REINFORCEMENT

SCALE ½" = 1'-0

SECTION A–A

SCALE ½" = 1'-0

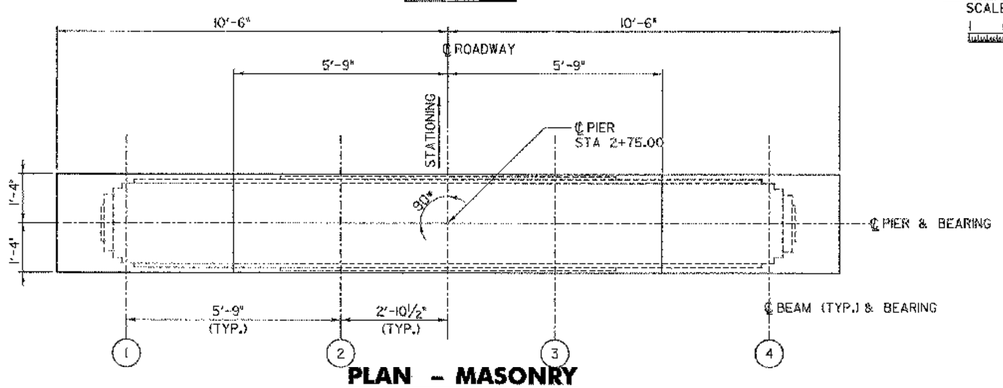

PLAN – MASONRY

SCALE ½" = 1'-0

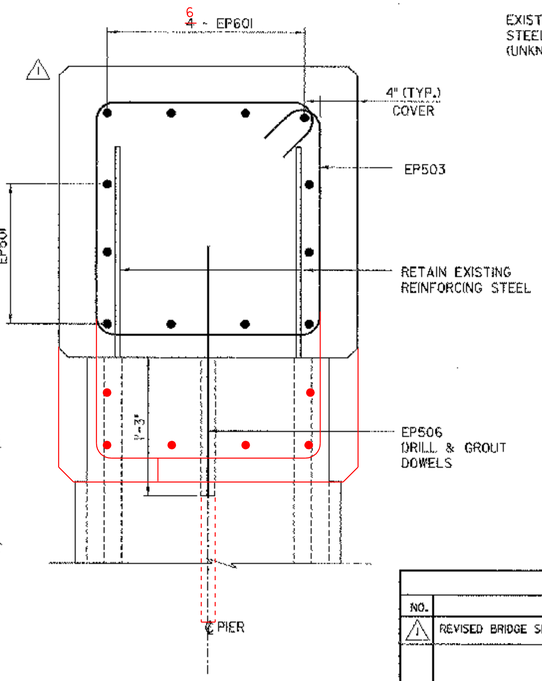

SECTION C–C

SCALE 1½" = 1'-0

NOTE:
REMOVAL OF EXISTING CONCRETE TO A DEPTH GREATER THEN SPECIFIED FOR ITEM 580.14 SHALL BE PAID UNDER THE ITEM 580.15, REPAIR OF CONCRETE SUBSTRUCTURE SURFACE, CLASS III.

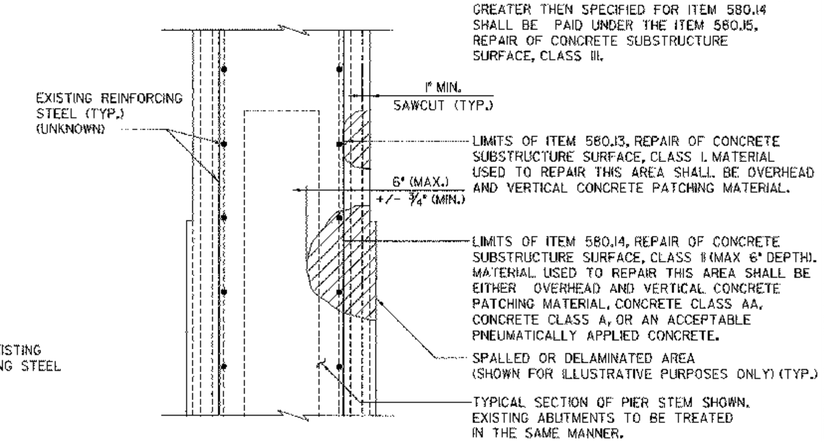

REPAIR OF CONCRETE SUBSTRUCTURE SURFACE CLASS I OR CLASS II

N.T.S.

DENOTES LIMITS OF REMOVAL

* APPROXIMATE EXISTING ELEVATION

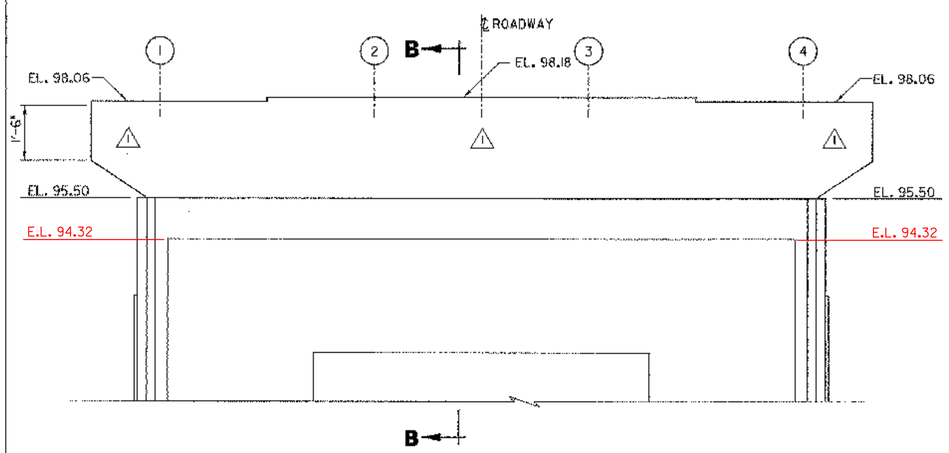

ELEVATION – MASONRY

SCALE ½" = 1'-0

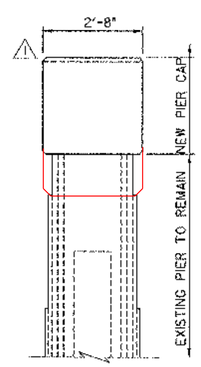

SECTION B–B

SCALE ½" = 1'-0

02/10/2004

REVISIONS		
NO.	DESCRIPTION	BY & DATE
1	REVISED BRIDGE SEAT ELEVATIONS	APG 2/3/04

DuBois & King inc.
engineering planning management development

STATE OF VERMONT
AGENCY OF TRANSPORTATION

Town Of CHESTER		Bridge No.	11
Highway No. TH 5		Log Sta.	–
		Surv. Sta.	–

CHURCH STREET OVER WILLIAMS RIVER

PIER DETAILS

Designed By J. W. KAMB		Drawn By G. J. WOJCIECHOWSKI	
Checked By J. TUCKER	Date 03/01	Bridge Design Supervisor J. TUCKER	Date 03/01
PROJECT CHESTER		PROJECT NO. BHO 1442 (32)	
I.G.C. Info. ...zJ365df9.dgn			
D & K DWG NO. 11362		Sheet 19 of 22	

ITEM	NO. PIECES	SIZE	LENGTH	MARK	TYPE	A	B	C	D	E	F	G	H	J	K	R	O
				SLAB													
1	207	5	31'-0"	ES501	STR												
2	71	5	29'-0"	ES502△	STR												
3	38	5	21'-0"	ES503△	STR												
4	234	5	4'-10"	ES504	S5	0'-6"	1'-4"	0'-10"	1'-4"			0'-10"					
5	8	5	23'-1"	ES505	STR												
6	12	5	23'-1"	ES506	STR												
7	28	5	9'-2"	ES508	S5	0'-10"	3'-5"	0'-8"	3'-5"			0'-10"					
8																	
9	282	6	23'-1"	ES601	STR												
10																	
11																	
12																	
13																	
				PIER													
14	10	5	17'-0"	EP501△	STR												
15	8	5	3'-5"	EP502	14		1'-5"	2'-0"					1'-0"				
16	19	5	9'-2"	EP503	T1	0'-4"	2'-3"	2'-0"	2'-3"	2'-0"		0'-4"					
17	4	5	8'-3"	EP504	S11		3-'6"	2'-3"	3'-6"								
18	2	5	8'-4"	EP505	T1	0'-4"	2'-3"	0'-10"	2'-3"	0'-10"		0'-4"					
19	12	5	2'-3"	EP506	STR												
20																	
21	6	6	20'-7"	EP601△	STR												
22	8	6	5'-2"	EP602	17		1'-2"	4'-0"									
23																	
				WINGWALL NO.1													
24	3	5	2'-3"	1W501	STR												
25	6	5	2'-4"	1W502	16			1'-0"	1'-4"				1'-3"		0'-6"		
26	10	5	4'-6"	E1W503△	STR												
27	8	5	5'-5"	E1W504	S9	0'-7"	2'-0"	10"	2'-0"				0'-5"	0'-5"			
28																	
29																	
30																	
31																	
				WINGWALL NO.3													
32	28	5	9'-6"	3W501△	STR												
33	14	5	4'-10"	3W502	2	1'-0"	3'-10"										
34	14	5	7'-8"	3W503	2	1'-0"	6'-8"										
35	16	5	5'-0"	3W504△	STR												
36	14	5	6'-1"	E3W505	S10		3'-3"	0'-10"	1'-0"								
37	4	5	9'-6"	E3W506	STR												
38																	
39	28	6	6'-6"	3W601	STR												
40																	
41																	
				WINGWALL NO.4													
42	28	5	9'-6"	4W501△	STR												
43	14	5	4'-10"	4W502	2	1'-0"	3'-10"										
44	14	5	7'-8"	4W503	2	1'-0"	6'-8"										
45	16	5	5'-0"	4W504△	STR												
46	14	5	6'-1"	E4W505	S10		3'-3"	0'-10"	1'-0"								
47	4	5	9'-6"	E4W506	STR												
48																	
49	28	6	6'-6"	4W601	STR												
50																	
51																	
				ABUTMENT NO. 1													
52	8	5	2'-2"	1A501	2	1'-0"	1'-2"					0'-0"					
53																	
54																	
55																	
56																	
57																	
58																	
59																	
60																	
61																	
62																	
63																	
64																	
65																	
66																	
67																	
68																	
69																	
70																	
71																	
72																	
73																	
74																	
75																	
76																	
77																	
78																	
79																	
80																	
81																	
82																	

ITEM	NO. PIECES	SIZE	LENGTH	MARK	TYPE	A	B	C	D	E	F	G	H	J	K	R	O

NOTES:

1. UNLESS OTHERWISE DESIGNATED, ALL BAR REINFORCEMENT FOR CONCRETE IN SIZES UP TO AND INCLUDING NO. 18 SHALL CONFORM TO THE REQUIREMENTS OF THE "SPECIFICATIONS FOR DEFORMED BILLET-STEEL BARS FOR CONCRETE REINFORCEMENT", AASHTO M 31(ASTM A 615-S1). ALL BARS SHALL BE GRADE 60, UNLESS OTHERWISE DESIGNATED.
2. FOR TYPICAL BENDING DETAILS, RECOMMENDED PIN DIAMETER "D" OF BENDS AND HOOKS, AND OTHER STANDARD PRACTICE, SEE CURRENT CONCRETE REINFORCING STEEL INSTITUTE "MANUAL OF STANDARD PRACTICE".
3. BARS WHICH REQUIRE MORE ACCURATE BENDING THAN STANDARD PRACTICES SHOULD HAVE LIMITS INDICATED.
4. ALL DIMENSIONS ARE OUT TO OUT OF BAR EXCEPT "A" AND ON STANDARD 180 DEGREE AND 135 DEGREE HOOKS.
5. "J" DIMENSION ON 180 DEGREE HOOKS TO BE SHOWN ONLY WHERE NECESSARY TO RESTRICT HOOK SIZE. OTHERWISE, STANDARD HOOKS ARE TO BE USED.
6. "H" DIMENSION ON STIRRUPS TO BE SHOWN ONLY WHEN NECESSARY TO MAINTAIN CLEARANCES.
7. WHERE SLOPE DIFFERS FROM 45 DEGREES, DIMENSIONS "H" AND "K" MUST BE SHOWN
8. ▲ DENOTES BARS TO BE CUT IN FIELD.
9. ✳ DENOTES ONE EXTRA BAR ADDED FOR TESTING PURPOSES.
10. △ DENOTES TWO EXTRA BARS ADDED FOR TESTING PURPOSES.
11. "E" IN PREFIX DENOTES EPOXY COATED REINFORCING STEEL.

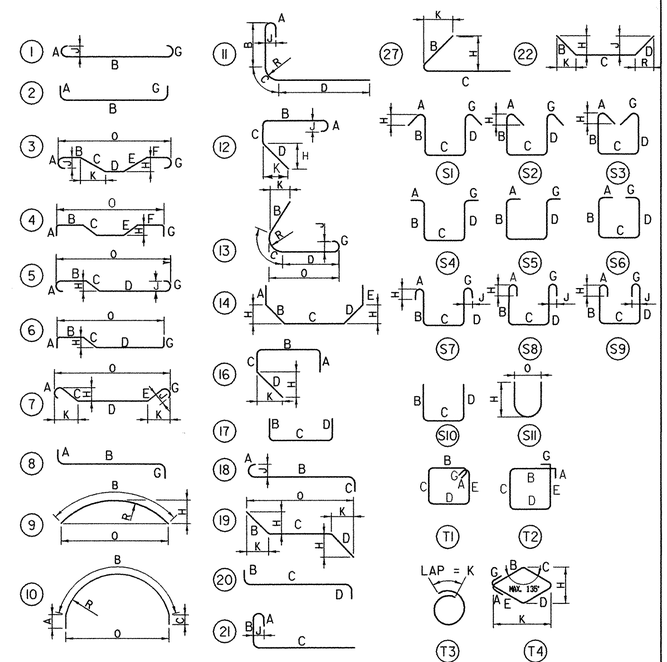

ASTM STANDARD REINFORCING BARS

BAR SIZE DESIGNATION	WEIGHT POUNDS PER FOOT	NOMINAL DIMENSIONS ROUND SECTION		
		DIAMETER INCHES	CROSS SECTIONAL AREA SQ. INCHES	PERIMETER INCHES
#3	.376	.375	.11	1.178
#4	.668	.500	.20	1.571
#5	1.043	.625	.31	1.963
#6	1.502	.750	.44	2.356
#7	2.044	.875	.60	2.749
#8	2.670	1.000	.79	3.142
#9	3.400	1.128	1.00	3.544
#10	4.303	1.270	1.27	3.990
#11	5.313	1.410	1.56	4.430
#14	7.65	1.693	2.25	5.32
#18	13.60	2.257	4.00	7.09

02/13/2004

REVISIONS		
NO.	DESCRIPTION	BY & DATE

DuBois & King inc.
engineering planning management development

STATE OF VERMONT
AGENCY OF TRANSPORTATION

Town Of CHESTER	Bridge No. 11
	Log Sta. -
Highway No. TH 5	Surv. Sta. -
CHURCH STREET OVER WILLIAMS RIVER	
REINFORCING STEEL SCHEDULE	
Designed By R. L. JOY	Drawn By G. J. WOJCIECHOWSKI
Checked By J. TUCKER Date 03/01	Bridge Design Supervisor J. TUCKER Date 03/01
PROJECT CHESTER	PROJECT NO. BHO 1442 (32)
I.G.C. Info. ...zj365r20 .dgn	
D & K DWG NO. 11363	Sheet 20 of 22

02/13/2004 01:15:01 PM

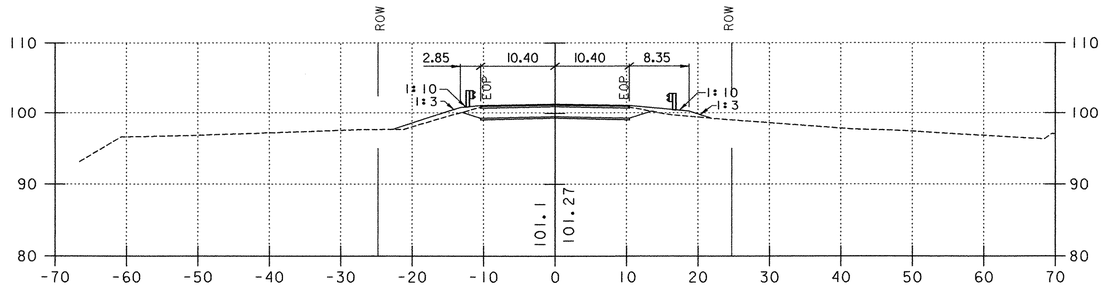

1+92

BEGIN GUARD RAIL STA. 1+89.75 RT.

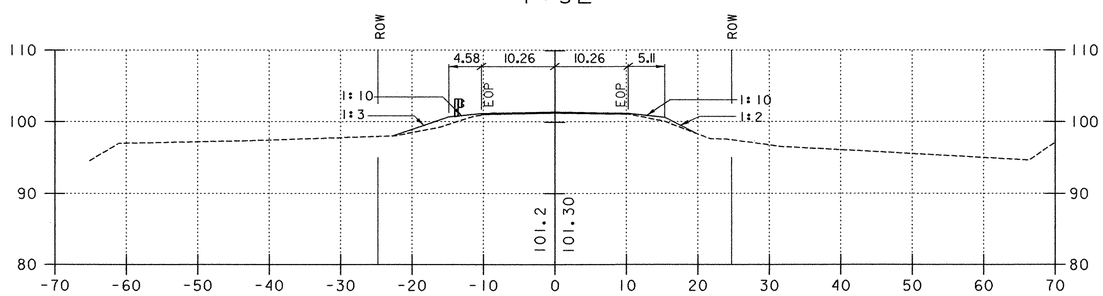

BEGIN GUARD RAIL STA. 1+82.50 LT.

1+84

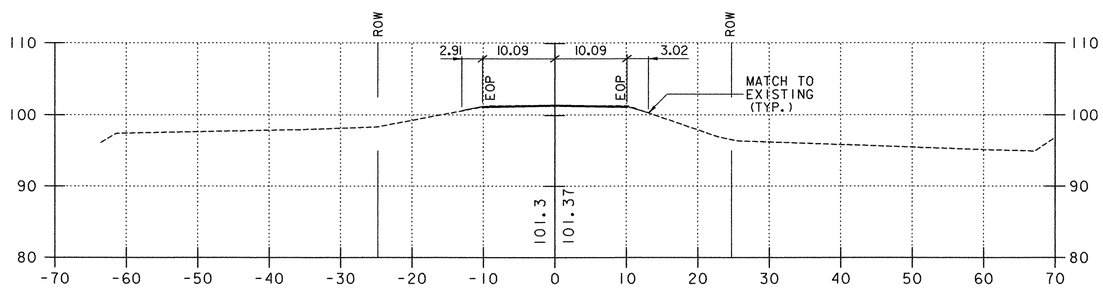

1+75

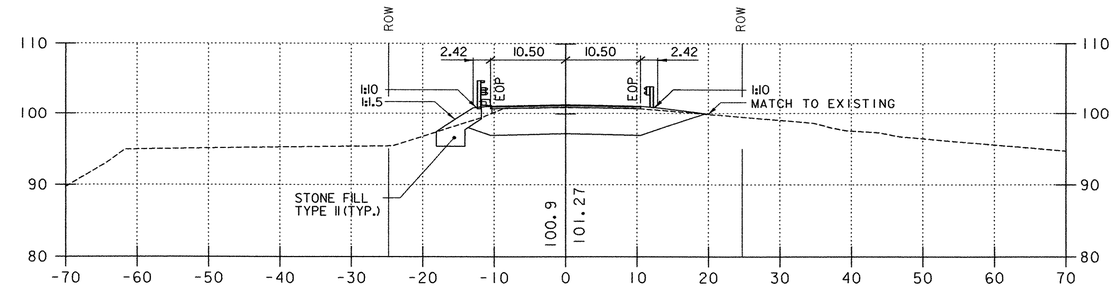

2+12

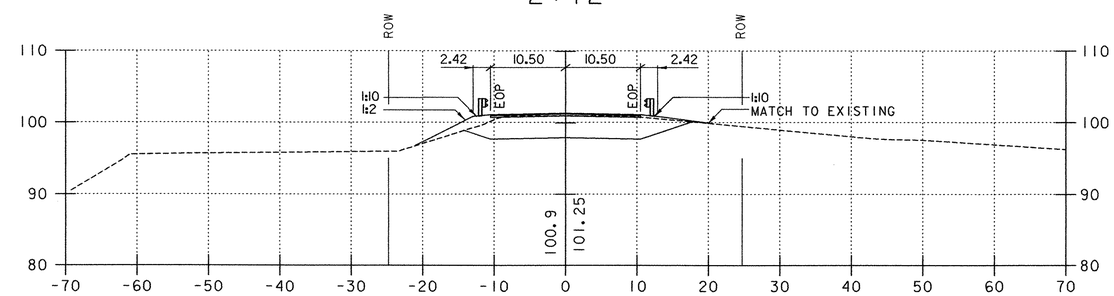

2+07

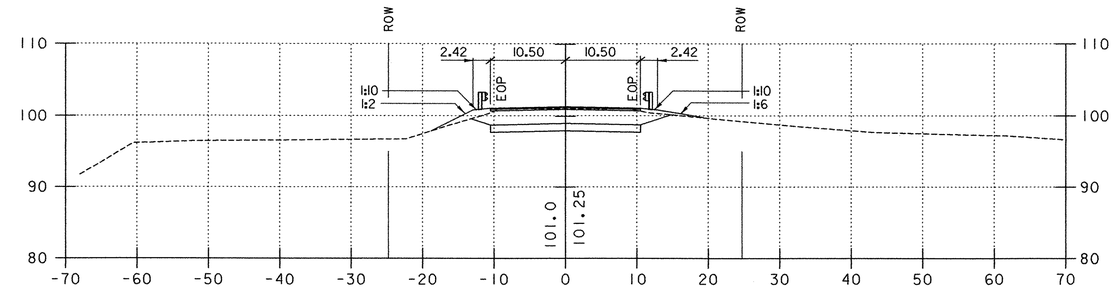

2+00

02/03/2004

REVISIONS		
NO.	DESCRIPTION	BY & DATE

DuBois & King inc.

engineering planning management development

STATE OF VERMONT
AGENCY OF TRANSPORTATION

Town Of	CHESTER	Bridge No.	11
		Log Sta.	-
Highway No.	TH 5	Surv. Sta.	-

CHURCH STREET OVER WILLIAMS RIVER

ROADWAY CROSS SECTIONS

Designed By G. J. WOJCIECHOWSKI		Drawn By G. J. WOJCIECHOWSKI	
Checked By J. TUCKER	Date 03/01	Bridge Design Supervisor J. TUCKER	Date 03/01
PROJECT CHESTER		PROJECT NO. BHO 1442 (32)	
I.G.C. Info. ...zJ36521.dgn			
D & K DWG NO. 11364		Sheet 21 of 22	

I:\VTB404\dgn\121xxxx21.dgn 02/03/2004 09:33:02 AM

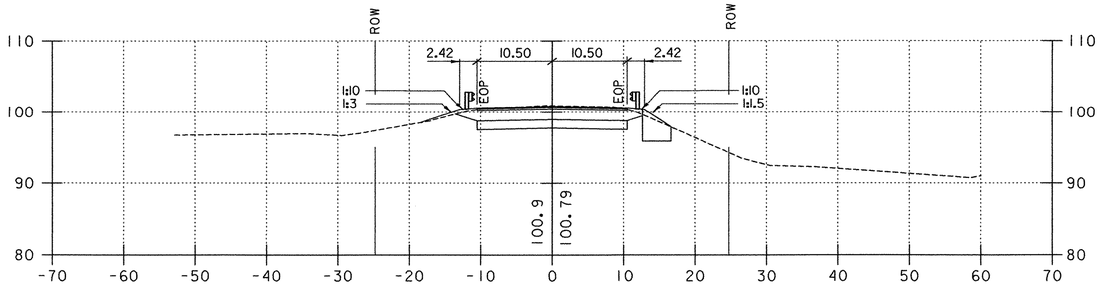

3+75

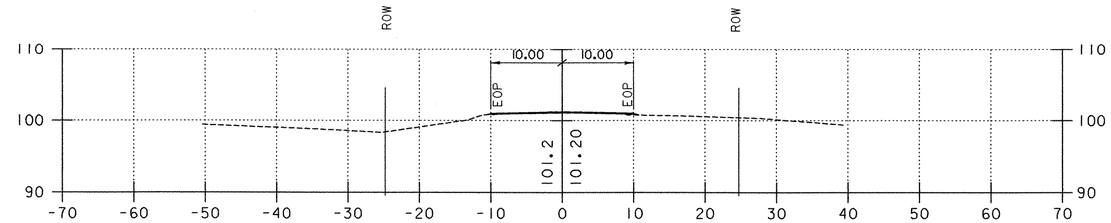

4+25

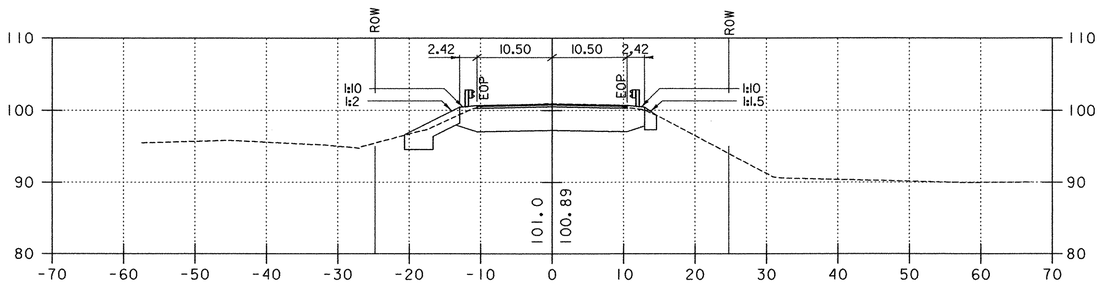

3+50

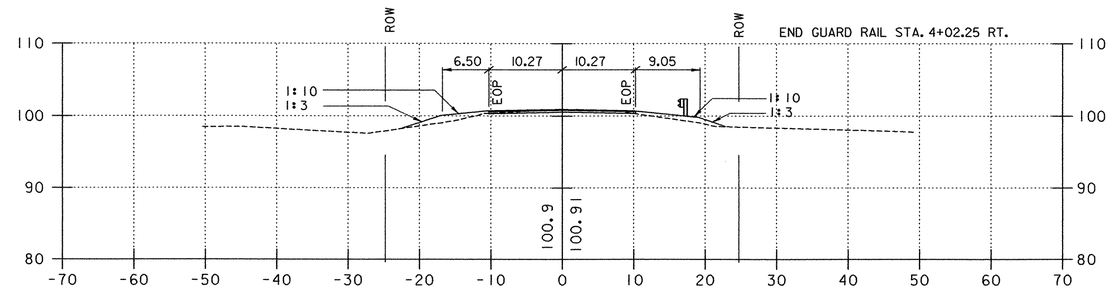

4+02

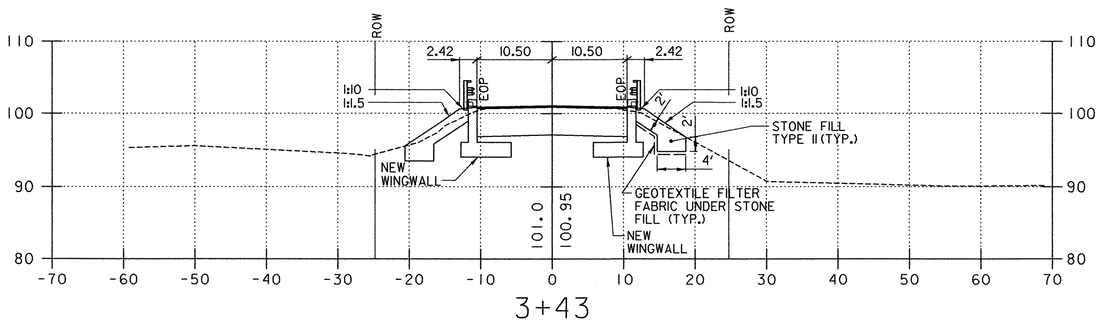

3+43

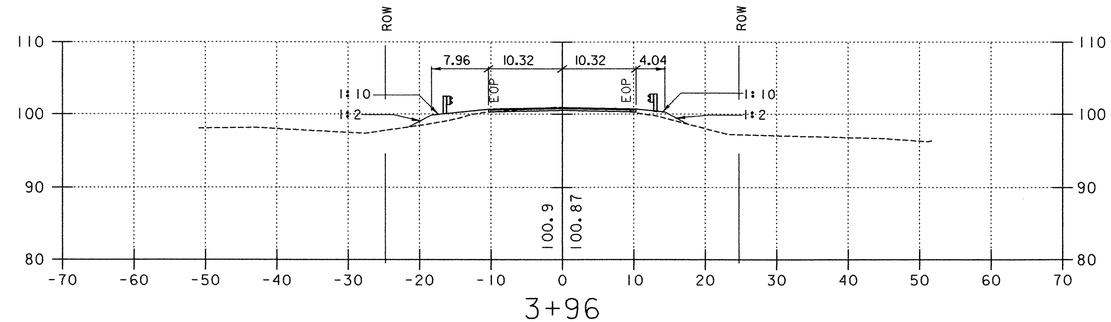

3+96

02/03/2004

REVISIONS		
NO.	DESCRIPTION	BY & DATE

DuBois & King inc.
engineering planning management development

STATE OF VERMONT
AGENCY OF TRANSPORTATION

Town Of	CHESTER	Bridge No.	II
Highway No.	TH 5	Log Sta.	-
		Surv. Sta.	-

CHURCH STREET OVER WILLIAMS RIVER

ROADWAY CROSS SECTIONS

Designed By G. J. WOJCIECHOWSKI		Drawn By G. J. WOJCIECHOWSKI	
Checked By J. TUCKER	Date 03/01	Bridge Design Supervisor J. TUCKER	Date 03/01
PROJECT CHESTER		PROJECT NO. BHO 1442 (32)	
I.G.C. Info. ...zJ36521.dgn			
D & K DWG NO. 11365		Sheet 22 of 22	

I:\11365\dgn\11xxxxc1.dgn 02/03/2004 09:33:33 AM

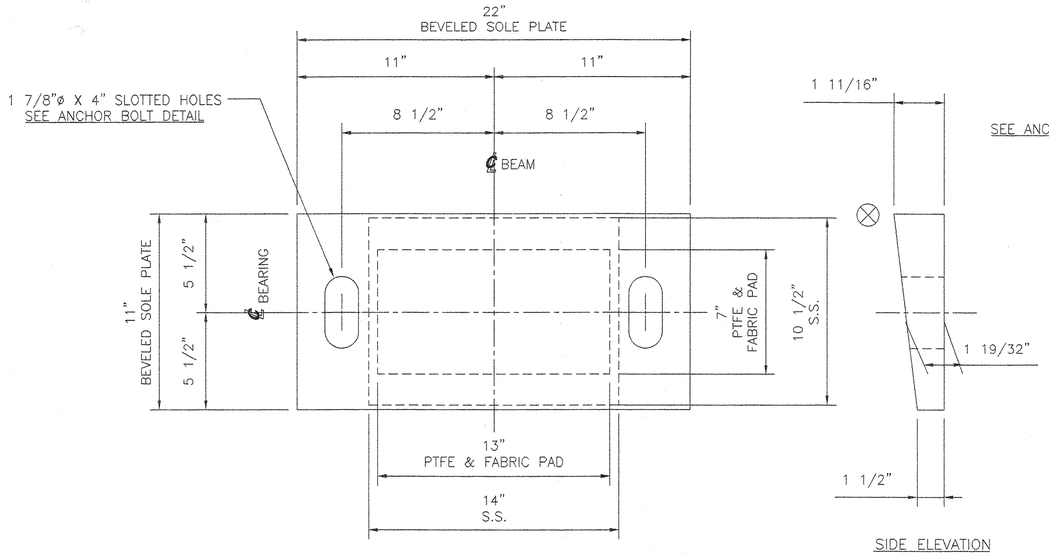

SIDE ELEVATION
SOLE PLATE ONLY
EXPANSION BEARING

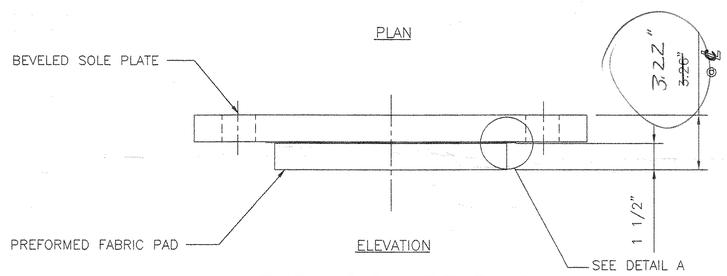

EXPANSION BEARING

LOCATE AT ABUTMENTS 1 AND 2
QTY – 8

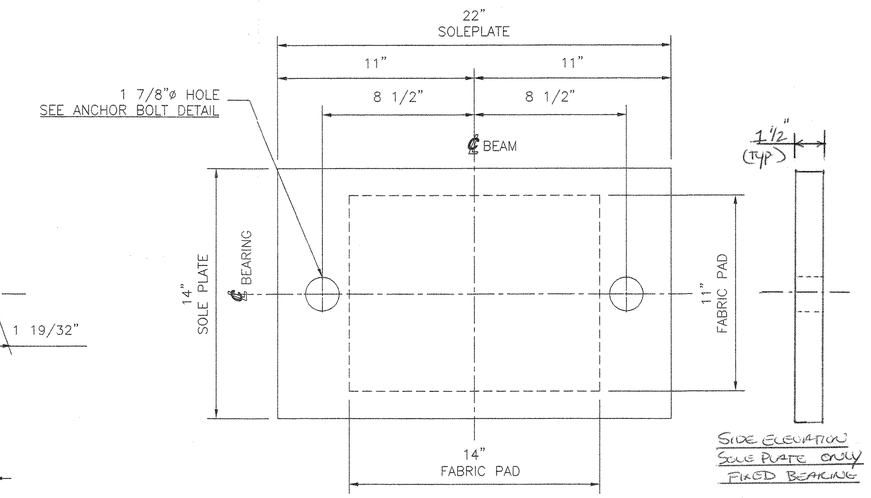

SIDE ELEVATION
SOLE PLATE ONLY
FIXED BEARING

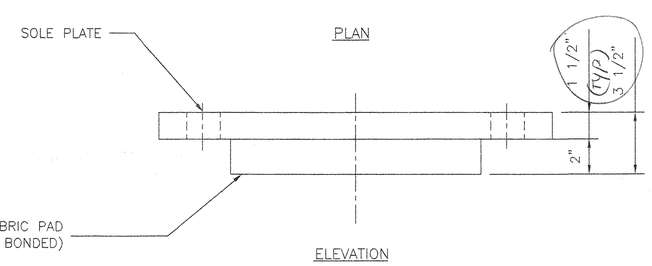

FIXED BEARING

LOCATE AT PIER
QTY – 4

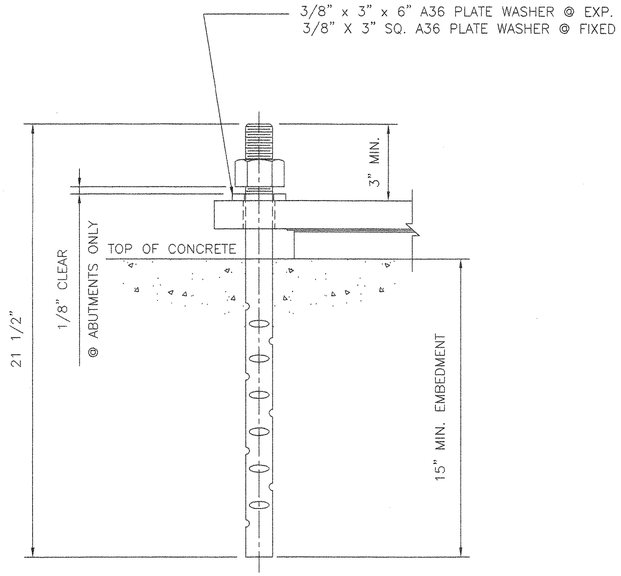

ANCHOR BOLT DETAIL

1 1/2"ø X 21 1/2" LG. ASTM F1554 GR. 55
SWEDGED ANCHOR BOLT W/4" OF THREADS
ONE END, ONE ASTM A563 HEAVY HEX NUT &
ONE A36 PLATE WASHER. ALL GALV.

THE CONTRACTOR SHALL VERIFY THAT ALL ASTM SPECIFICATIONS NOTED ON THESE PLANS CORRESPONDS TO THE APPROPRIATE AASHTO SPECIFICATIONS REFERENCED IN THE STANDARD SPECIFICATIONS.

BEARING DATA AND NOTES

1. STEEL – ASTM A709 GR36 ZINC METALLIZED AND PAINTED WITH AN APPROVED SEALER
2. PTFE – ASTM D4894 VIRGIN UNFILLED
3. STAINLESS STEEL – ASTM A240 TYPE 304 WITH ~~20~~ 10 RMS FINISH OR LESS ON SLIDING SURFACE.
4. PREFORMED FABRIC PADS – AASHTO 18.4.9.1 DIV. 2
5. ANCHOR BOLTS – F1554 GR55 SWEDGED AND GALVANIZED
6. BEARINGS SHALL BE SHIPPED AS COMPLETE UNITS AND SHALL BE WRAPPED FOR PROTECTION DURING TRANSIT AND STORAGE.
7. BEARINGS SHALL BE MARKED FOR IDENTIFICATION WITH LOCATION.
8. COSMEC, INC. REPRESENTATIVE: MR. MATT McANDREWS (508) 668-6600
9. ⊗ INDICATES THICK END OF SOLE PLATE
10. LOCATION OF FABRICATION: 70 SOUTH ST. WALPOLE, MA 02081
11. PREFORMED BEARING PAD DESIGN CRITERIA:
    A. ALLOWABLE BEARING PRESSURE ON CONCRETE = 1000 PSI
    B. MINIMUM ALLOWABLE DESIGN ROTATION = 0.015 RADIANS
    C. HORIZONTAL CAPACITY SHALL BE A MINIMUM OF 6% OF THE VERTICAL LOAD
    D. DESIGN LOAD PER BEARING: ABUTMENTS = 90 KIPS & PIER = 150 KIPS
12. ALL BEARING DEVICES SHALL BE METALIZED AS PER SUBSECTION 531.04 (B) AND 506.15 (b) OF THE GENERAL SPECIAL PROVISIONS. AREAS OF METALIZING DAMAGED BY FIELD WELDING OR HANDLING SHALL BE REPAIRED IN ACCORDANCE WITH SUPPLEMENTAL SPECIFICATIONS 513 WHICH REFERENCES ASTM A760.
13. ALL EDGE CORNERS SHALL BE ROUNDED TO 1/16" RADIUS.
14. PROTECT PTFE AND STAINLESS STEEL SURFACES FROM WELD SPATTER, DIRT, OR ANY OTHER FOREIGN MATERIALS.
15. BEARINGS MUST NOT BE DISASSEMBLED.

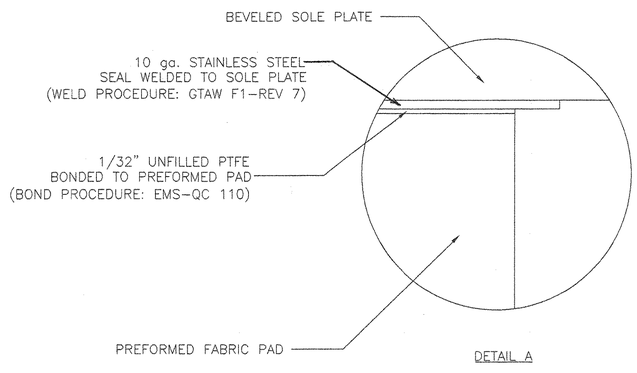

DETAIL A

ACCEPTED
ACCEPTED AS CORRECTED ✓
REJECTED, REVISE AND RESUBMIT
REJECTED, UNACCEPTABLE
Checking is only for conformance with the design concept of the project and compliance with the information given in the Contract Documents. The Engineer assumes no liability for errors or omissions that may be contained herein. The Contractor, by approving and submitting these documents, verifies their accuracy as stipulated on the Contractor's Shop Drawing Stamp.
DuBOIS AND KING
Date 6/10/04 By TSR

REV.		BY:	DATE	CK'D BY:	DATE

STATE OF VERMONT
AGENCY OF TRANSPORTATION
BRIDGE NO. 11
HIGHWAY TH 5
BRIDGE ON CHURCH STREET
OVER WILLIAMS RIVER
TOWN OF CHESTER
PROJECT NO. BHO 1442 (32)

COSMEC, INC. 70 SOUTH STREET WALPOLE, MA. 02081

SCALE: 1/4"=1"	DRAWN BY: DCW	CHECKED BY: PJM
	DATE: 05.21.04	DATE 05.21.04

COSMEC PREFORMED FABRIC PAD BEARINGS

CUSTOMER	S.O. NUMBER	DRAWING NUMBER	REV.
F.W. WHITCOMB	60063	4187	

.025 BB

GENERAL NOTES:

17th EDITION DATED 2002

STRUCTURAL STEEL:

1. ALL MATERIALS AND CONSTRUCTION SHALL CONFORM TO STATE OF VERMONT AGENCY OF TRANSPORTATION STANDARD SPECIFICATIONS FOR HIGHWAY AND BRIDGE CONSTRUCTION, DATED 2001, AND ITS LATEST REVISIONS, AND THE AASHTO STANDARD SPECIFICATIONS FOR HIGHWAY BRIDGES, AND ITS LATEST REVISIONS, AND AASUTO/AWS D1.5, 2001.
2. ALL STRUCTURAL STEEL SHALL BE FABRICATED USING PROCEDURES ~~AND~~ AND TOLERANCES IN ACCORDANCE WITH SECTION 506.03 OF THE STANDARD SPECIFICATIONS.
3. ALL DIMENSIONS ARE GIVEN AT 68°F UNLESS OTHERWISE NOTED.
4. ALL MEMBERS AND/OR PLATES MARKED (CVN) AND ONLY THOSE MEMBERS MUST MEET THE CHARPY V-NOTCH REQUIREMENTS FOR MAIN MEMBERS AS INDICATED IN SECTION 714 OF THE VERMONT AGENCY OF TRANSPORTATION SPECIFICATIONS OF CONSTRUCTION.
5. ALL STRUCTURAL STEEL SHALL CONFORM TO AASHTO M270 GRADE 50W.
6. ALL FIELD CONNECTIONS SHALL BE MADE USING 7/8 INCH DIAMETER BOLTS MEETING ASTM DESIGNATION A325 TYPE 3 (AASHTO M164). HOLES SHALL BE 15/16 INCH DIAMETER.
7. ANY BOLT HOLES IN THE WEB OF THE FASCIA GIRDERS NOT OTHERWISE FILLED, SHALL BE FILLED WITH BUTTON HEAD OR HEXAGONAL HEAD BOLTS COMPATIBLE WITH THE GIRDER STEEL. THE BOLTS SHALL BE TIGHTENED IN ACCORDANCE WITH SUBSECTION 506.19
8. ALL MATERIALS SHALL BE BLAST CLEANED BEFORE OR AFTER FABRICATION. THE FINAL SURFACE APPEARANCE AFTER FABRICATION SHALL MEET THE REQUIREMENTS OF SSPC-SP10.
9. THIS IS A UNPAINTED PROJECT.
10. [DT] DENOTES HOLES TO BE DRILLED FULL SIZE IN FIELD SPLICE PLATES BY MEANS OF NUMERICALLY CONTROLLED DRILLING EQUIPMENT. NC DRILLING SPLICE PLATES SHALL THEN BE USED AS TEMPLATES TO DRILL FULL SIZE HOLES IN GIRDER WEBS AND FLANGES WHILE ASSEMBLES PER "SA" DRAWINGS.
11. FIELD SPLICE MATERIAL SHALL BE BOLTED IN PLACE FOR SHIPMENT.

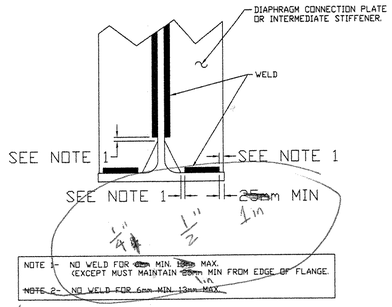

WELD TERMINATION DETAIL
NTS

BILL OF MATERIAL

REV. NO:	SHIP MARK	PIECE MARK	QTY.	TYPE OF MATERIAL	SIZE OF MATERIAL	GRADE	LENGTH	FINISH	NOTES	WEIGHT

LIST OF ABREVIATIONS

B	BEAM	MAX	MAXIMUM
BC	BOTTOM CHORD	MIN	MINIMUN
BOB	BOTTOM OF BASE PLATE	ML	MATERIAL LOOSE
BOC	BOTTOM OF CONTRETE	MS	MISCELLANEOUS
BOP	BOTTOM OF PLATE	(NS)	NEAR SIDE
BOS	BOTTOM OF STEEL	NTS	NOT TO SCALE
BOT	BOTTOM		
BR	BRACE	O/ALL	OVERALL
BRG	BEARING	OC	ON CENTERS
(BS)	BOTH SIDES	OD	OUTSIDE DIAMETER
		OH	OPPOSITE HAND
C	COLUMN	OPNG	OPENING
℄	CENTERLINE	OPP	OPPOSITE
C/C	CENTER TO CENTER		
CLR	CLEAR	PC	POINT OF CURVE
CONC	CONCRETE	PL	PLATE
CONST	CONSTRUCTION	PR	PORTAL
CONT	CONTINUOUS	PRJ	PROJECTION
CONN	CONNECTION		
CTR	CENTER	R	RISER
CVN	CHARPY V-NOTCH REQUIRED	R.D.	RUNNING DIMENSION
		REF	REFERENCE
D	DEPTH	REQ'D	REQUIRED
DET	DETAIL	REV	REVISION
DIAG	DIANGLE		
DIA	DIAMETER	S	STAIRS
DN	DOWN	SCH	SCHEDULE
DWG	DRAWING	SECT	SECTION
		SHT	SHEET
EA	EACH	SP	SPACE
EL	ELEVATION	SPA	SPACING
EM	EMBEDDED MATERIAL	SPEC	SPECIFICATION
ENB	EMBEDDED	SQ	SQUARE
EQ	EQUAL	SR	SAG ROD
EXIT	EXISTING	SS	STAINLESS STEEL
		ST	STRINGER
F	FRAME	STIFF	STIFFENER
FB	FLOOR BEAM	STRUCT	STRUCTURAL
FCM	FRACTURE CRITICAL MEMBER	STL	STEEL
FIN FL	FINISH FLOOR	STD	STANDARD
FLG	FLANGE	SW	SIDEWALK BRACKET
FLR	FLOOR	SYMM	SYMMETRICAL
FP	FLOOR PLATE	SWT	SHIPPING WEIGHT
(FS)	FAR SIDE		
		T	TRUSS
G	GIRT	TC	TOP CHORD
GA	GAUGE	THK	THICKNESS
GALV	GALVANIZED	THD	THREAD
GOSL	GAUGE OUTSTANDING LEG	T&B	TOP & BOTTOM
GR	GRATING	TOC	TOP OF CONCRETE
GRD	GROUND	TOG	TOP GRATING
		TOS	TOP STEEL
H	HANGER	TYP	TYPICAL
HOR	HORIZONTAL		
HR	HANDRAIL	U.N.O.	UNLESS NOTED OTHERWISE
HS	HIGH-STRENGTH		
		VERT	VERTICAL
ID	INSIDE DIAMETER	VB	VERTICAL BRACING
IN	INCHES		
		WP	WORKING POINT
L	LADDERS		

REJECTED
RESUBMIT AS CORRECTED
REVISE AND RESUBMIT
UNACCEPTABLE
Review is only for compliance with the design concept of the project and compliance with the information given in the Contract Documents. The Engineer assumes no liability for errors or omissions that may be contained herein. The Contractor, by approving and submitting these documents, verifies their accuracy as stipulated on the Contractor's Shop Drawing Stamp.
DuBOIS & KING
Date 7/22/04 By RM

EASTERN BRIDGE LLC
RURAL RTE 2 BOX 302
CLAREMONT, NH 03743
603-542-5202
FABRICATOR

ITEM NO: 506.50

REVISIONS		
NO.	DATE	DESCRIPTION
	7/14/04	FOR APPROVAL

FRANK W. WHITCOMB CONSTRUCTION CORP.
CONTRACT: BHO 1442 (32) VT ADT

CHURCH STREET (TH 5) OVER WILLIAMS RIVER
BRIDGE NO. 11
CHESTER, VT

TITLE: GENERAL NOTES

DRAWN BY 4/20/04 DANA BACON	SHOP ORDER 5025	DWG. NO. GN1
CKD BY JH 7/15/04	BLOCK NO.	SHEET NO. 1 OF 1

~~SS~~ SS 026 ~~SS~~ 026 SS

BILL OF MATERIAL

REV. NO:	SHIP MARK	PIECE MARK	QTY.	TYPE OF MATERIAL	SIZE OF MATERIAL	GRADE	LENGTH	FINISH	NOTES	WEIGHT

EASTERN BRIDGE, LLC
WELDING PROCEDURE SPECIFICATION

WPS NUMBER: SMAW PL400-03	ISSUE DATE: 3-11-02
PROJECT: CHESTER BHO 1442 (32)	EB JOB NO: 5025
BASE METAL: ASTM A709 GR36,50,50W	
WELDING PROCESS: SMAW	
FILLER METAL SPEC.: A5.5 E8018 C3	
FLUX/SHIELDING GAS: N/A	
CURRENT AND POLARITY: DCEP	ELEC STICKOUT: N/A
WELDING POSITION: 2F	
PREHEAT AND INTERPASS TEMP.: AWS D1.5 TABLE 4.4	WPS QUALIFICATION: PREQUALIFIED
HEAT INPUT: 50.68-73.92 KILOJOULES	SUPPORTING PQR#: N/A

ELECTRODE SIZE	WELDING AMPS	CURRENT VOLTS	TRAVEL SPEED
1/8"	125 - 150	23 - 26	3 - 4.5 IPM
5/32"	140 - 190	23 - 26	3 - 4.5 IPM
3/16"	180 - 250	23 - 26	3 - 4.5 IPM

JOINT DETAIL AWS NUMBER : FILLET 2F

6mm & 8mm

NOTES:

MINIMUM PREHEAT AND INTERPASS TEMPERATURES SHALL BE AS FOLLOWS:

MAXIMUM INTERPASS TEMPERATURE SHALL BE 450°F

THICKNESS OF THICKEST PART AT POINT OF WELDING	TEMPERATURE, °F ASTM A709 STEEL, GR.50W
UP TO 3/4"	50°F
3/4" TO 1 1/2"	70°F
1 1/2" TO 2 1/2"	150°F
OVER 2 1/2"	250°F

THIS PROCEDURE MAY VARY DUE TO FABRICATION SEQUENCE, FIT UP, PASS SIZE, ETC. WITHIN THE LIMITS PROVIDED IN APPLICABLE AWS CODES AND CONTRACT SPECIFICATIONS.

V.A.O.T.
RECEIVED
CK'D BY_____ OK'D BY JWC
JUL 20 2004
RESUBMIT_____ APPROVED ✓
BY _____ DATE 07-21-04

EASTERN BRIDGE, LLC
WELDING PROCEDURE SPECIFICATION

WPS NUMBER: SAW PL48-1	ISSUE DATE: 3-11-02
PROJECT: CHESTER BHO 1442 (32)	EB JOB NO: 5025
BASE METAL: ASTM A709 GR36,50,50W	
WELDING PROCESS: SUBMERGED ARC WELDING	
FILLER METAL SPEC.: AWS A5.13 LINCOLN LA75	
FLUX/SHIELDING GAS: LINCOLN 960	
CURRENT AND POLARITY: DCEP	ELEC STICKOUT: 1" x 1/4"
WELDING POSITION: 2F	
PREHEAT AND INTERPASS TEMP.: AWS D1.5 TABLE 4.4	WPS QUALIFICATION: AWS D1.5, 5.13
HEAT INPUT: 50.68 - 73.92 KILOJOULES	SUPPORTING PQR#: SAW - A332-3 PL48

ELECTRODE SIZE	WELDING AMPS	CURRENT VOLTS	TRAVEL SPEED
3/32"	396 - 440	28.8 - 31.5	11.25 - 13.5

JOINT DETAIL AWS NUMBER : FILLET

8mm

NOTES:

MINIMUM PREHEAT AND INTERPASS TEMPERATURES SHALL BE AS FOLLOWS:

MAXIMUM INTERPASS TEMPERATURE SHALL BE 450°F

THICKNESS OF THICKEST PART AT POINT OF WELDING	TEMPERATURE, °F ASTM A709 STEEL, GR 50W
UP TO 3/4"	50°F
3/4" TO 1 1/2"	70°F
1 1/2" TO 2 1/2"	150°F
OVER 2 1/2"	250°F

THIS PROCEDURE MAY VARY DUE TO FABRICATION SEQUENCE, FIT UP, PASS SIZE, ETC. WITHIN THE LIMITS PROVIDED IN APPLICABLE AWS CODES AND CONTRACT SPECIFICATIONS.

V.A.O.T.
RECEIVED
CK'D BY_____ OK'D BY JWC
JUL 20 2004
RESUBMIT_____ APPROVED ✓
BY _____ DATE 07-21-04

WELDING PROCEDURES WERE NOT REVIEWED BY BCA of DUBOIS & KING, INC.

ITEM NO: 506.50

REVISIONS		
NO.	DATE	DESCRIPTION
	7/14/04	FOR APPROVAL

FRANK W. WHITCOMB CONSTRUCTION CORP.
CONTRACT : BHO 1442 (32) VT AOT

CHURCH STREET (TH 5) OVER WILLIAMS RIVER
BRIDGE NO. 11
CHESTER, VT

TITLE : WELD PROCEDURES AND FABRICATION PROCEDURES

EASTERN BRIDGE, LLC
RURAL RTE 2, BOX 302
CLAREMONT, NH 03743
603-542-5202

FABRICATOR

DRAWN BY 4/20/04 DANA BACON	SHOP ORDER 5025	DWG. NO. WPS1
CKD BY JH 7/15/04	BLOCK NO.	SHEET NO. 1 OF 1

02755

BILL OF MATERIALS WAS NOT CHECKED BY THE REVIEWER, TYPICAL ALL SHEETS

NOTES:

1. ALL HOLES ARE 15/16" DIA.
2. MATERIALS: M270Gr50W
3. FASTENERS: 7/8" A325 TYPE 3
4. PAINT: NONE.
5. DIMENSION ARE IN FEET & INCHES.
6. GENERAL NOTES: SEE DRAWING GN1

BILL OF MATERIAL

REV. NO:	SHIP MARK	PIECE MARK	QTY.	TYPE OF MATERIAL	SIZE OF MATERIAL	GRADE	LENGTH	FINISH	NOTES	WEIGHT
		P1	4	PLATE	PL 1/4" X 12"	M270GR50W	2'-4"			95 LBS
			144	H.S. BOLT	7/8"	A325 TYPE 3	2 1/4"			
			144	H.S. HEX NUTS	7/8"	A563 GR. DH3				
			144	WASHERS	7/8"	F436				
			120	H.S. BOLT	7/8"	A325 TYPE 3	2 3/4"			
			120	H.S. HEX NUTS	7/8"	A563 GR. DH3				
			120	WASHERS	7/8"	F436				
			192	H.S. BOLT	7/8"	A325 TYPE 3	3 3/4"			
			192	H.S. HEX NUTS	7/8"	A563 GR. DH3				
			192	WASHERS	7/8"	F436				

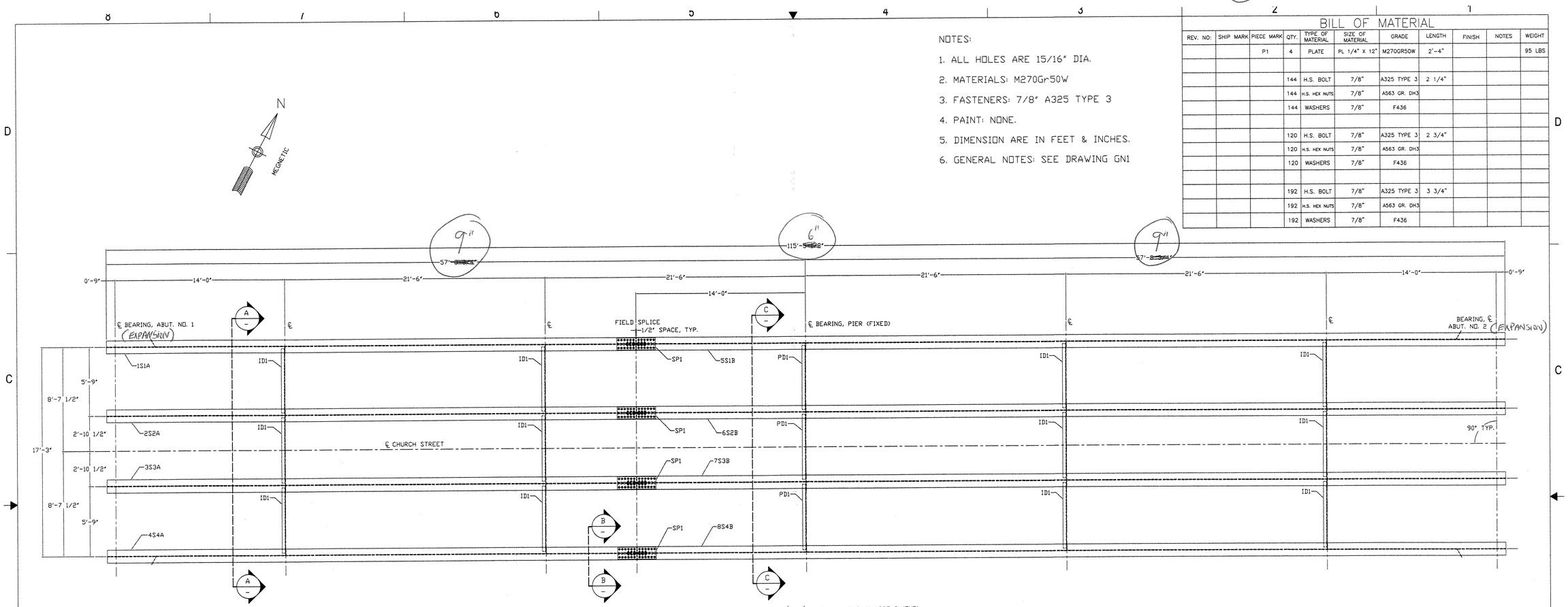

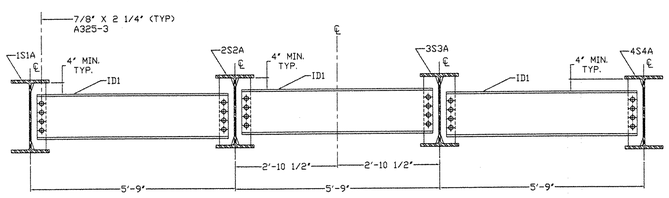

SECTION A
(INTERMEDIATE)
(4 PLACES)

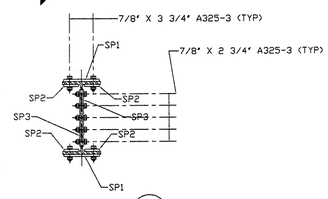

SECTION B

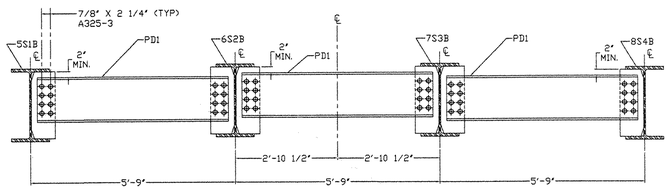

SECTION C
(AT PIER)
(1 PLACES)

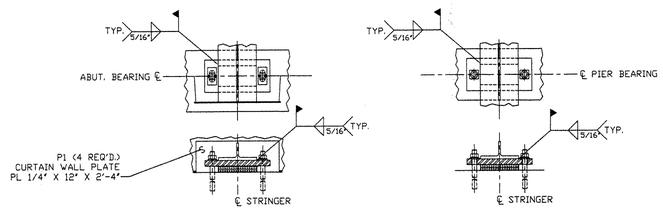

BEARING & ANCHOR BOLTS BY OTHERS.

AS CORRECTED
REVISE AND RESUBMIT
NOTED
7/22/04 RCA

ITEM NO: 506.50

REVISIONS		
NO.	DATE	DESCRIPTION
	7/14/04	FOR APPROVAL

FRANK W. WHITCOMB CONSTRUCTION CORP.
CONTRACT: BHO 1442 (32) VT ADT

CHURCH STREET (TH 5) OVER WILLIAMS RIVER
BRIDGE NO. 11
CHESTER, VT

TITLE: BRIDGE FRAMING PLAN

DRAWN BY 4/27/04 DANA BACON	SHOP ORDER 5025	DWG. NO. E-1
CKD BY JH 7/15/04	BLOCK NO.	SHEET NO. 1 OF 1

FABRICATOR: EASTERN BRIDGE LLC, RURAL RTE 2, BOX 302, CLAREMONT, NH 03743, 603-542-5202

B02855

W24 X 131	
W	2'-0 1/2" X 5/8"
F	1'-0 7/8" X 15/16"

NOTES:

1. ALL HOLES ARE 15/16" DIA.
2. MATERIALS: M270Gr50W (UN)
3. FASTENERS: 7/8" A325 TYPE 3
4. PAINT: NONE.
5. DIMENSION ARE IN FEET & INCHES.
6. GENERAL NOTES: SEE DRAWING GN1
7. ENDS OF BEAMS SHALL BE CUT SQUARE AT ABUTMENTS.
8. ALL STIFFENERS ARE 90° TO BOTTOM FLANGE.

BILL OF MATERIAL

REV. NO:	SHIP MARK	PIECE MARK	QTY.	TYPE OF MATERIAL	SIZE OF MATERIAL	GRADE	LENGTH	FINISH	NOTES	WEIGHT
	1S1A	ST1	1	W	W24 X 131	M270GR50W TZ	43'-8 3/4"		CVN	5729#
	1S1A	CP1	2	PLATE	PL 1/2" X 5"	M270GR50W	1'-10 5/8"			32#
	1S1A	DB1	1	PLATE	PL 1/4" X 3"	M270GR50W	0'-9 3/16"			2#
	1S1A	SP1	2	PLATE	PL 3/4" X 12"	M270GR50W T2	3'-2"		CVN	194#
	1S1A	SP2	4	PLATE	PL 3/4" X 5"	M270GR50W T2	3'-2"		CVN	162#
	1S1A	SP3	2	PLATE	PL 3/8" X 19"	M270GR50W T2	1'-8"		CVN	81#

6200

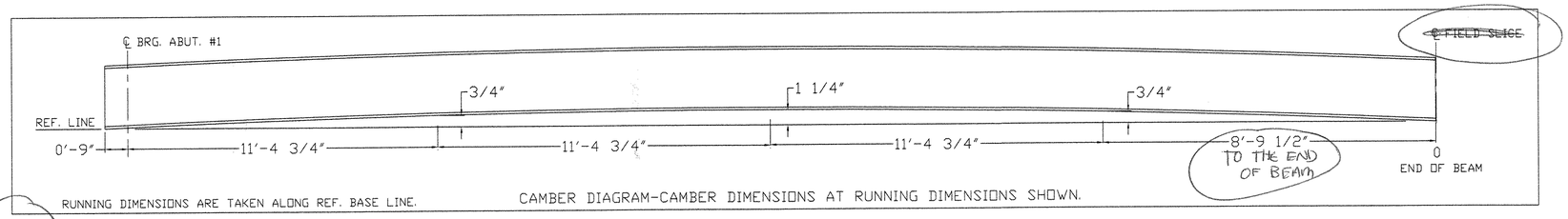

RUNNING DIMENSIONS ARE TAKEN ALONG REF. BASE LINE.

CAMBER DIAGRAM-CAMBER DIMENSIONS AT RUNNING DIMENSIONS SHOWN.

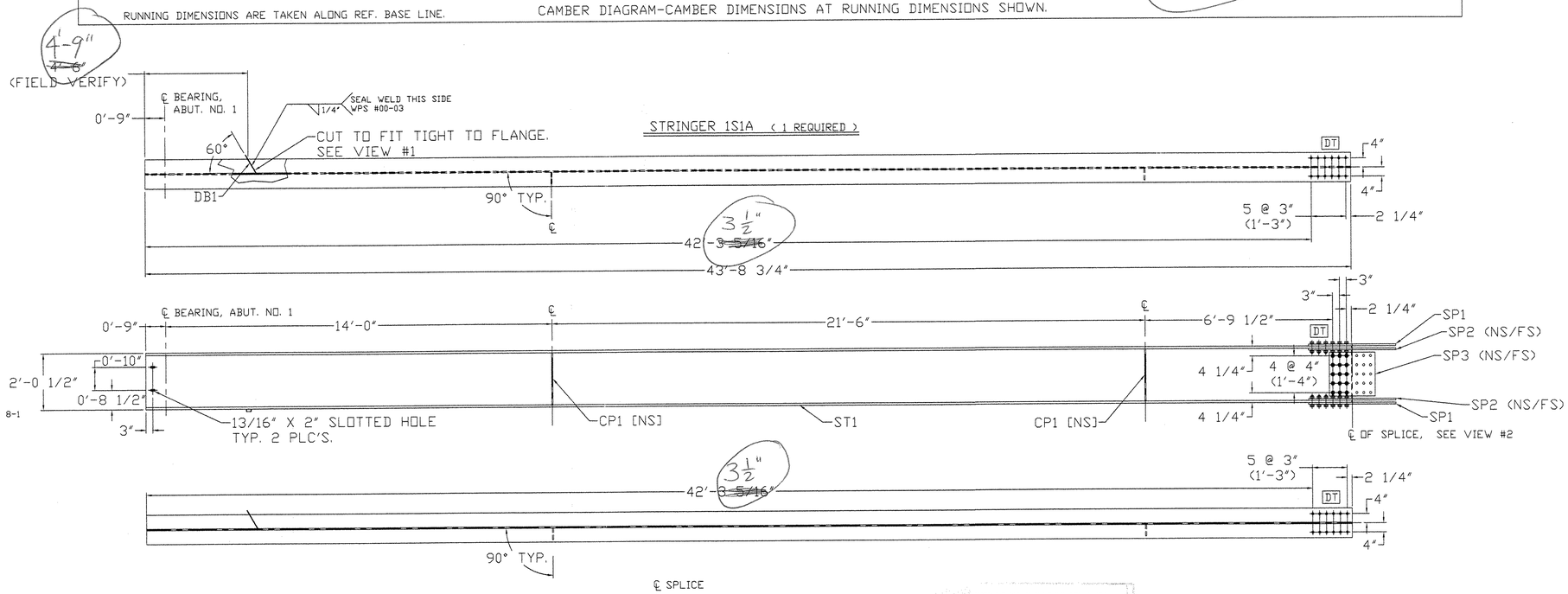

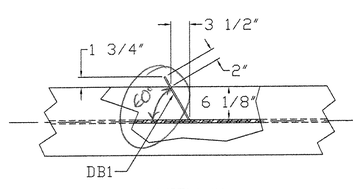

VIEW #1

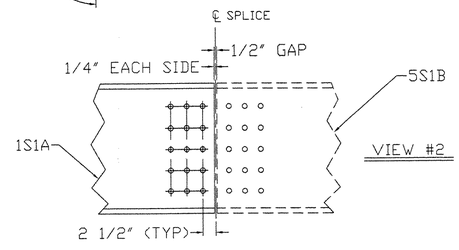

VIEW #2

CORRECTED
REVISE AND RESUBMIT
REJECTED, UNACCEPTABLE
Review is only for conformance with the design concept of the project and compliance with the information given in the Contract Documents. The Engineer assumes no liability for errors or omissions that may be contained herein. The Contractor, by reviewing and submitting these documents, verifies that dimensions as shown on the Contractor's Shop Drawing Stamp.
Check and Verify
7/22/04 BOA

EASTERN BRIDGE LLC
RURAL RTE 2, BOX 302
CLAREMONT, NH 03743
603-542-5202
FABRICATOR

REVISIONS		
NO.	DATE	DESCRIPTION
	7/14/04	FOR APPROVAL

ITEM NO: 506.50

FRANK W. WHITCOMB CONSTRUCTION CORP.
CONTRACT : BHO 1442 (32) VT ADT

CHURCH STREET (TH 5) OVER WILLIAMS RIVER
BRIDGE NO. 11
CHESTER, VT

TITLE : STRINGER DETAIL 1S1A

DRAWN BY 4/23/04 DANA BACON	SHOP ORDER 5025	DWG. NO. 1
CKD BY JH 7/15/04	BLOCK NO.	SHEET NO. 1 OF 1

302955

W24 X 131	
W	2'-0 1/2" X 5/8"
F	1'-0 7/8" X 15/16"

NOTES:

1. ALL HOLES ARE 15/16" DIA.
2. MATERIALS: M270Gr50W (UN)
3. FASTENERS: 7/8" A325 TYPE 3
4. PAINT: NONE.
5. DIMENSION ARE IN FEET & INCHES.
6. GENERAL NOTES: SEE DRAWING GN1
7. ENDS OF BEAMS SHALL BE CUT SQUARE AT ABUTMENTS.
8. ALL STIFFENERS ARE 90° TO BOTTOM FLANGE.

BILL OF MATERIAL

REV. NO:	SHIP MARK	PIECE MARK	QTY:	TYPE OF MATERIAL	SIZE OF MATERIAL	GRADE	LENGTH	FINISH	NOTES	WEIGHT
	2S2A	ST1	1	W	W24 X 131	M270GR50W TZ	43'-8 3/4"		CVN	5729#
	2S2A	CP1	2	PLATE	PL 1/2" X 5"	M270GR50W	1'-10 5/8"			32#
	2S2A	CP3	2	PLATE	PL 1/2" X 5"	M270GR50W	1'-10 5/8"			32#
	2S2A	SP1	2	PLATE	PL 3/4" X 12"	M270GR50W TZ	3'-2"		CVN	194#
	2S2A	SP2	4	PLATE	PL 3/4" X 5"	M270GR50W TZ	3'-2"		CVN	162#
	2S2A	SP3	2	PLATE	PL 3/8" X 19"	M270GR50W TZ	1'-8"		CVN	81#

6230

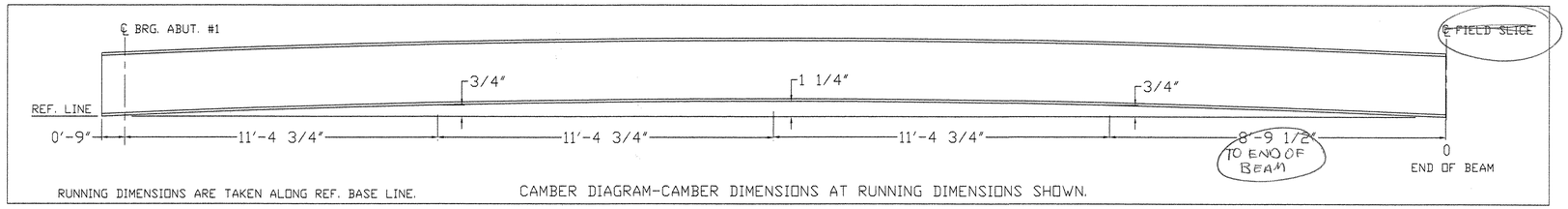

STRINGER 2S2A (1 REQUIRED)

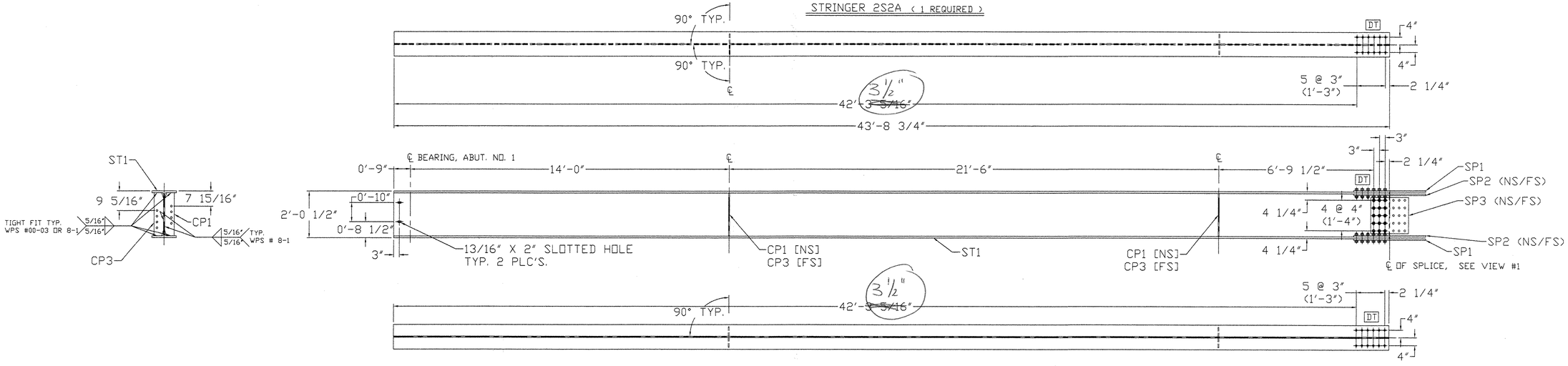

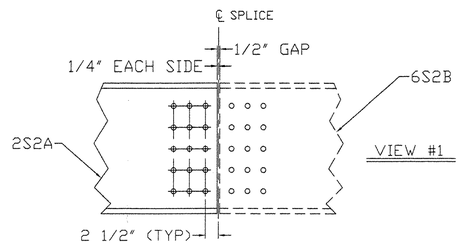

VIEW #1

GENERAL
ACCEPTED AS CONTRACTED
ACCEPTED AS NOTED
REVISE AND RESUBMIT
REJECTED, UNACCEPTABLE
Checking is only for conformance with the design concept of the project and compliance with the information given in the Contract Documents. The reviewer assumes no liability for errors or omissions. Not may be considered remote. The Contractor, in approving and submitting these documents, verifies their accuracy as stipulated on the Contractor's Shop Drawing Stamp.
DUBOIS & KING, INC.
Date 7/22/09

EASTERN BRIDGE LLC
RURAL RTE 2, BOX 392
CLAREMONT, NH 03743
603-542-5202
FABRICATOR

REVISIONS		
NO.	DATE	DESCRIPTION
	7/14/04	FOR APPROVAL

ITEM NO: 506.50

FRANK W. WHITCOMB CONSTRUCTION CORP.
CONTRACT : BHO 1442 (32) VT ADT

CHURCH STREET (TH 5) OVER WILLIAMS RIVER
BRIDGE NO. 11
CHESTER, VT

TITLE :
STRINGER DETAIL 2S2A

DRAWN BY 4/23/04 DANA BACON	SHOP ORDER 5025	DWG. NO. 2
CKD BY JH 7/15/04	BLOCK NO.	SHEET NO. 1 OF 1

03055

W24 X 131	
W	2'-0 1/2" X 5/8"
F	1'-0 7/8" X 15/16"

NOTES:

1. ALL HOLES ARE 15/16" DIA.
2. MATERIALS: M270Gr50W (UN)
3. FASTENERS: 7/8" A325 TYPE 3
4. PAINT: NONE.
5. DIMENSION ARE IN FEET & INCHES.
6. GENERAL NOTES: SEE DRAWING GN1
7. ENDS OF BEAMS SHALL BE CUT SQUARE AT ABUTMENTS.
8. ALL STIFFENERS ARE 90° TO BOTTOM FLANGE.

BILL OF MATERIAL

REV. NO:	SHIP MARK	PIECE MARK	QTY.	TYPE OF MATERIAL	SIZE OF MATERIAL	GRADE	LENGTH	FINISH	NOTES	WEIGHT
	3S3A	ST1	1	W	W24 X 131	M270GR50W TZ	43'-8 3/4"		CVN	5729#
	3S3A	CP1	2	PLATE	PL 1/2" X 5"	M270GR50W	1'-10 5/8"			32#
	3S3A	CP3	2	PLATE	PL 1/2" X 5"	M270GR50W	1'-10 5/8"			32#
	3S3A	SP1	2	PLATE	PL 3/4" X 12"	M270GR50W TZ	3'-2"		CVN	194#
	3S3A	SP2	4	PLATE	PL 3/4" X 5"	M270GR50W TZ	3'-2"		CVN	162#
	3S3A	SP3	2	PLATE	PL 3/8" X 19"	M270GR50W TZ	1'-8"		CVN	81#

6230

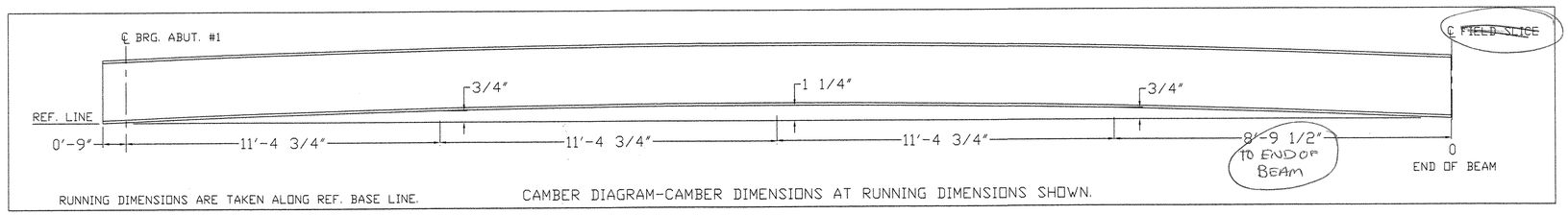

STRINGER 3S3A (1 REQUIRED)

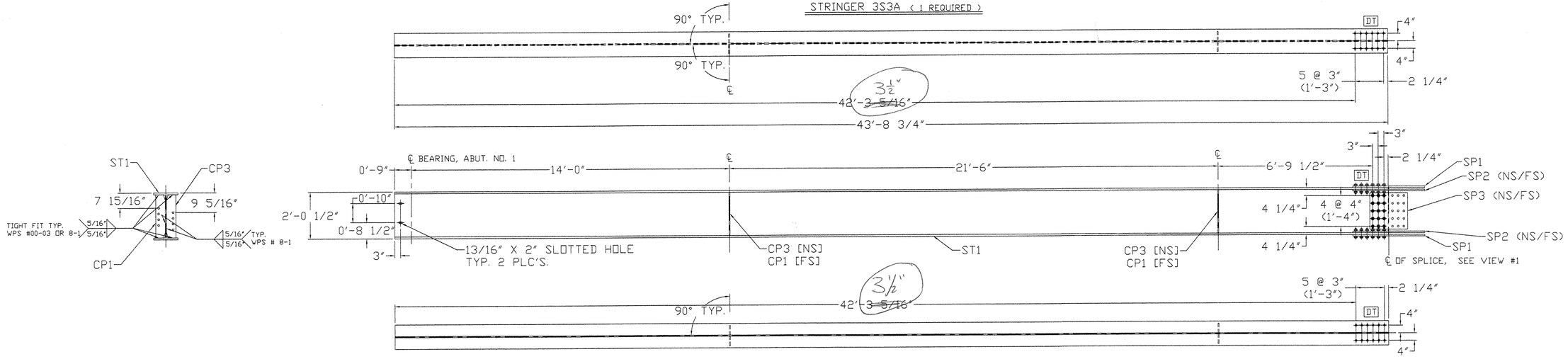

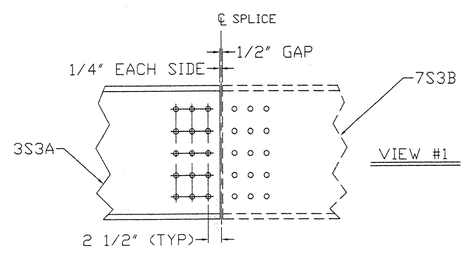

VIEW #1

REVIEW STAMP
CORRECTED
REJECTED, REVISE AND RESUBMIT
REJECTED, UNACCEPTABLE
Checking is only for conformance with the design concept of the Project and compliance with the information given in the Contract Documents. The Engineer assumes no liability for errors or omissions that may be contained herein. The Contractor, by reviewing and submitting these documents, verifies that as may be stipulated on the Contractor's Shop Drawing Stamp.
Date 7/22/04 RSA

EASTERN BRIDGE LLC
RURAL RTE 2, BOX 302
CLAIREMONT, NH 03743
603-542-5202
FABRICATOR

REVISIONS		
NO.	DATE	DESCRIPTION
	7/14/04	FOR APPROVAL

ITEM NO: 506.50

FRANK W. WHITCOMB CONSTRUCTION CORP.
CONTRACT : BHO 1442 (32) VT ADT

CHURCH STREET (TH 5) OVER WILLIAMS RIVER
BRIDGE NO. 11
CHESTER, VT

TITLE : STRINGER DETAIL 3S3A

DRAWN BY 4/23/04 DANA BACON	SHOP ORDER 5025	DWG. NO. 3
CKD BY JH 7/15/04	BLOCK NO.	SHEET NO. 1 OF 1

03155

W24 X 131	
W	2'-0 1/2" X 5/8"
F	1'-0 7/8" X 15/16"

NOTES:

1. ALL HOLES ARE 15/16" DIA.
2. MATERIALS: M270Gr50W (UN)
3. FASTENERS: 7/8" A325 TYPE 3
4. PAINT: NONE.
5. DIMENSION ARE IN FEET & INCHES.
6. GENERAL NOTES: SEE DRAWING GN1
7. ENDS OF BEAMS SHALL BE CUT SQUARE AT ABUTMENTS.
8. ALL STIFFENERS ARE 90° TO BOTTOM FLANGE.

BILL OF MATERIAL

REV. NO:	SHIP MARK	PIECE MARK	QTY.	TYPE OF MATERIAL	SIZE OF MATERIAL	GRADE	LENGTH	FINISH	NOTES	WEIGHT
	4S4A	ST1	1	W	W24 X 131	M270GR50W T2	43'-8 3/4"		CVN	5729#
	4S4A	CP1	2	PLATE	PL 1/2" X 5"	M270GR50W	1'-10 5/8"			32#
	4S4A	DB2	1	PLATE	PL 1/4" X 3"	M270GR50W	0'-9 3/16"			2#
	4S4A	SP1	2	PLATE	PL 3/4" X 12"	M270GR50W T2	3'-2"		CVN	194#
	4S4A	SP2	4	PLATE	PL 3/4" X 5"	M270GR50W T2	3'-2"		CVN	162#
	4S4A	SP3	2	PLATE	PL 3/8" X 19"	M270GR50W T2	1'-8"		CVN	81#

6200

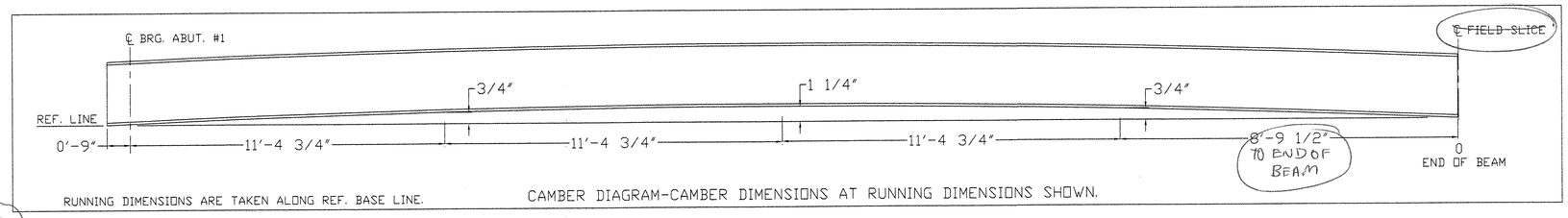

RUNNING DIMENSIONS ARE TAKEN ALONG REF. BASE LINE.

CAMBER DIAGRAM-CAMBER DIMENSIONS AT RUNNING DIMENSIONS SHOWN.

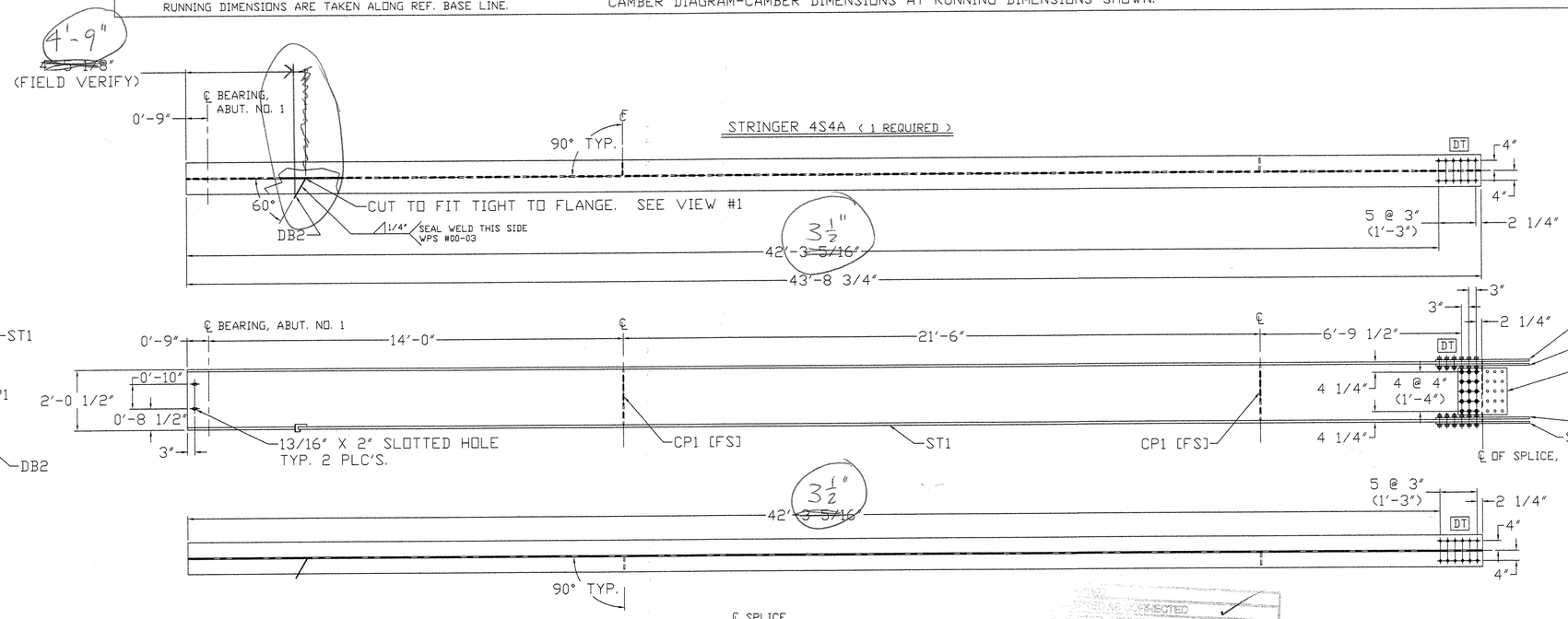

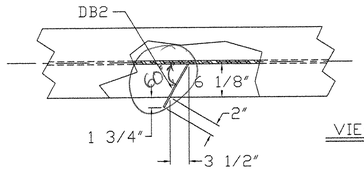

VIEW #1

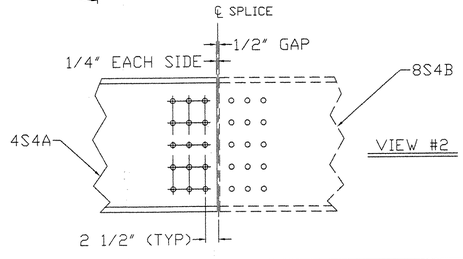

VIEW #2

CORRECTED
REVISE AND RESUBMIT
UNACCEPTABLE
Review is only for conformance with the design concept of the project and compliance with the information given in the Contract Documents. The Engineer assumes no liability for errors or omissions that may be contained herein. The Contractor, by opening and submitting these documents, verifies that all dimensions as shown on the Contractor's Shop Drawing Stamp.
7/22/04 ECA

EASTERN BRIDGE LLC
RURAL RTE 2, BOX 302
CLAREMONT, NH 03743
603-542-5202
FABRICATOR

ITEM NO: 506.50

REVISIONS		
NO.	DATE	DESCRIPTION
	7/14/04	FOR APPROVAL

FRANK W. WHITCOMB CONSTRUCTION CORP.
CONTRACT: BHG 1442 (32) VT ADT

CHURCH STREET (TH 5) OVER WILLIAMS RIVER
BRIDGE NO. 11
CHESTER, VT

TITLE: STRINGER DETAIL 4S4A

DRAWN BY 4/23/04 DANA BACON	SHOP ORDER 5025	DWG. NO. 4
CKD BY JH 7/15/04	BLOCK NO.	SHEET NO. 1 OF 1

03255

W24 X 131	
W	2'-0 1/2" X 5/8"
F	1'-0 7/8" X 15/16"

NOTES:

1. ALL HOLES ARE 15/16" DIA.
2. MATERIALS: M270Gr50W (UN)
3. FASTENERS: 7/8" A325 TYPE 3
4. PAINT: NONE.
5. DIMENSION ARE IN FEET & INCHES.
6. GENERAL NOTES: SEE DRAWING GN1
7. ENDS OF BEAMS SHALL BE CUT SQUARE AT ABUTMENTS.
8. ALL STIFFENERS ARE 90° TO BOTTOM FLANGE.

ST2

BILL OF MATERIAL

REV. NO:	SHIP MARK	PIECE MARK	QTY.	TYPE OF MATERIAL	SIZE OF MATERIAL	GRADE	LENGTH	FINISH	NOTES	WEIGHT
	5S1B	ST2	1	W	W24 X 131	M270GR50W TZ	71'-8 3/4"		CVN	9397#
	5S1B	CP1	2	PLATE	PL 1/2" X 5"	M270GR50W	1'-10 5/8"			32#
	5S1B	CP2	1	PLATE	PL 1/2" X 8"	M270GR50W	1'-10 5/8"			26#
	5S1B	DB2	1	PLATE	PL 1/4" X 3"	M270GR50W	0'-9 3/16"			2#

9457

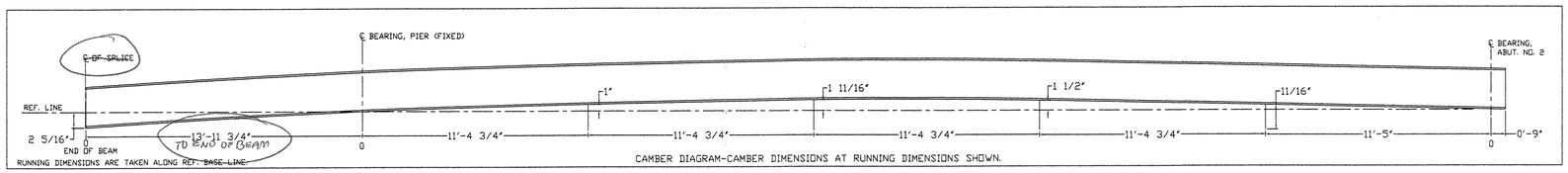

CAMBER DIAGRAM-CAMBER DIMENSIONS AT RUNNING DIMENSIONS SHOWN.

STRINGER 5S1B (1 REQUIRED)

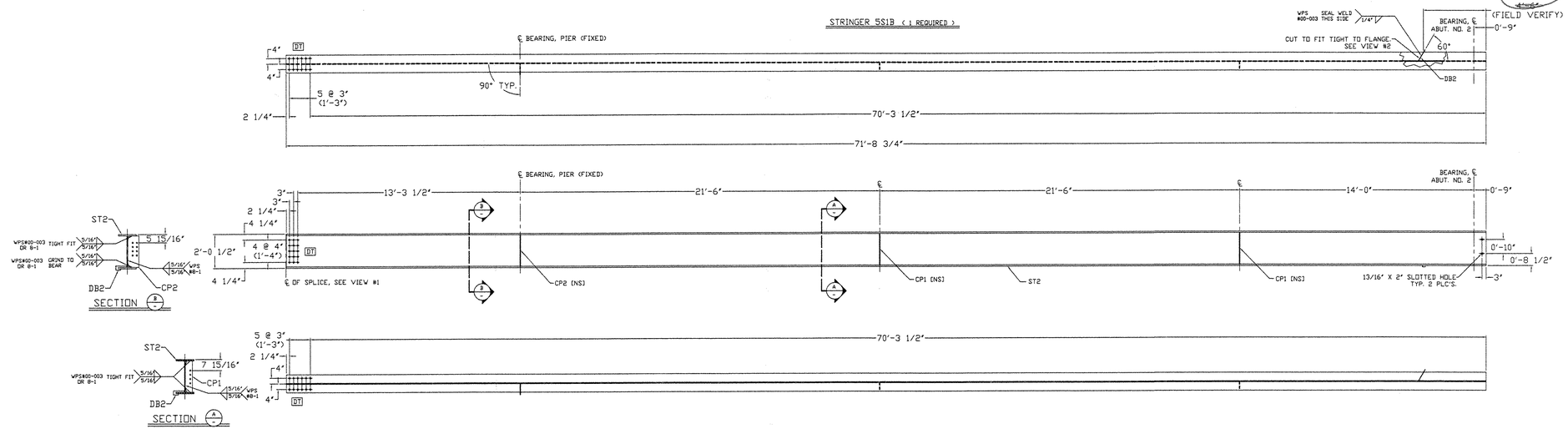

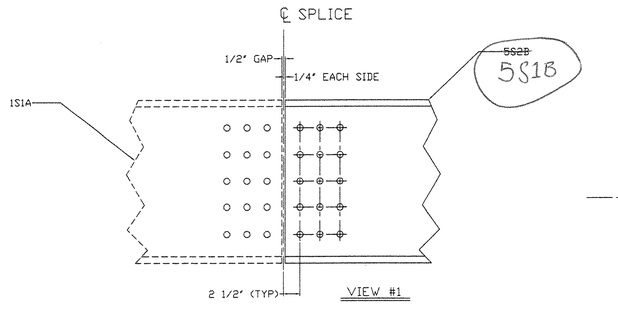

VIEW #1

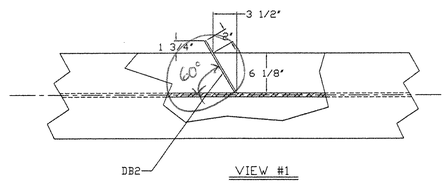

VIEW #1

REJECTED - REVISE AND RESUBMIT
NOT CORRECTED
UNACCEPTABLE
Checking is only for conformance with the design concept of the project and compliance with the information given in the Contract Documents. The Engineer assumes no liability for errors or omissions that may be contained herein. The Contractor, by submitting the shop drawing, verifies that he/she/it has checked and approved the Contractor's Shop Drawing Stamp.
7/22/04

EASTERN BRIDGE LLC
RURAL RTE 2, BOX 302
CLAREMONT, NH 03743
603-542-5202
FABRICATOR

REVISIONS		
NO.	DATE	DESCRIPTION
	7/14/04	FOR APPROVAL

ITEM NO: 506.50

FRANK W. WHITCOMB CONSTRUCTION CORP.
CONTRACT: BHO 1442 (32) VT ADT

CHURCH STREET (TH 5) OVER WILLIAMS RIVER
BRIDGE NO. 11
CHESTER, VT

TITLE: STRINGER DETAIL 5S1B

DRAWN BY 4/26/04 DANA BACON	SHOP ORDER 5025	DWG. NO. 5
CKD BY JH 7/15/04	BLOCK NO.	SHEET NO. 1 OF 1

03355

W24 X 131	
W	2'-0 1/2" X 5/8"
F	1'-0 7/8" X 15/16"

NOTES:

1. ALL HOLES ARE 15/16" DIA.
2. MATERIALS: M270Gr50W (UN)
3. FASTENERS: 7/8" A325 TYPE 3
4. PAINT: NONE.
5. DIMENSION ARE IN FEET & INCHES.
6. GENERAL NOTES: SEE DRAWING GN1
7. ENDS OF BEAMS SHALL BE CUT SQUARE AT ABUTMENTS.
8. ALL STIFFENERS ARE 90° TO BOTTOM FLANGE.

BILL OF MATERIAL

REV. NO:	SHIP MARK	PIECE MARK	QTY.	TYPE OF MATERIAL	SIZE OF MATERIAL	GRADE	LENGTH	FINISH	NOTES	WEIGHT
	6S2B	ST2	1	W	W24 X 131	M270GR50W TZ	71'-8 3/4"		CVN	9397#
	6S2B	CP1	2	PLATE	PL 1/2" X 5"	M270GR50W	1'-10 5/8"			32#
	6S2B	CP2	1	PLATE	PL 1/2" X 8"	M270GR50W	1'-10 5/8"			26#
	6S2B	CP3	2	PLATE	PL 1/2" X 5"	M270GR50W	1'-10 5/8"			32#
	6S2B	CP4	1	PLATE	PL 1/2" X 8"	M270GR50W	1'-10 5/8"			26#

9513

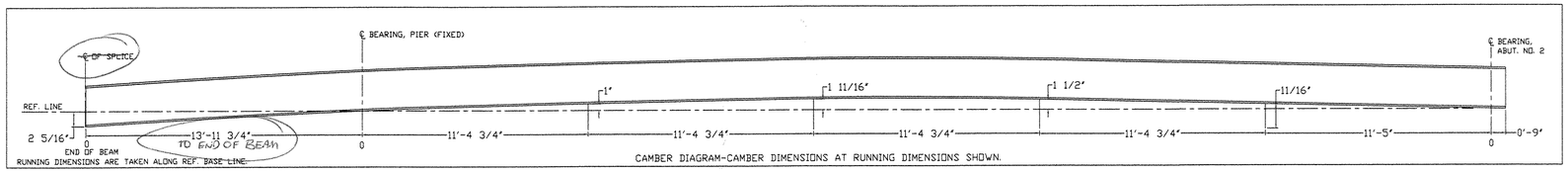

STRINGER 6S2B (1 REQUIRED)

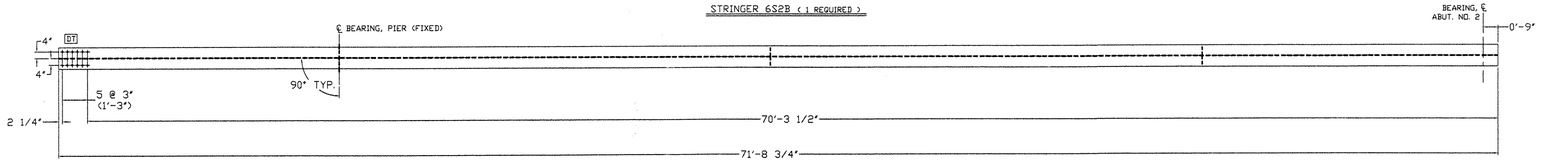

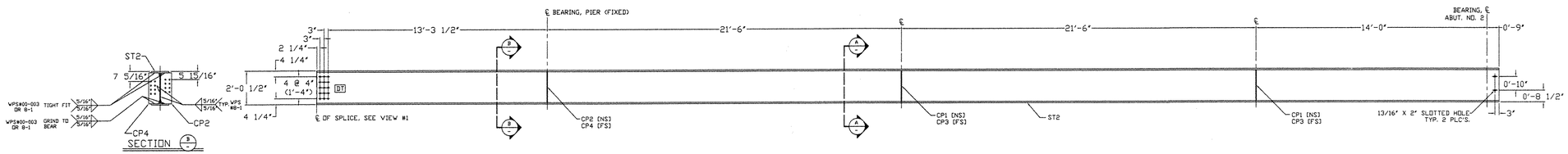

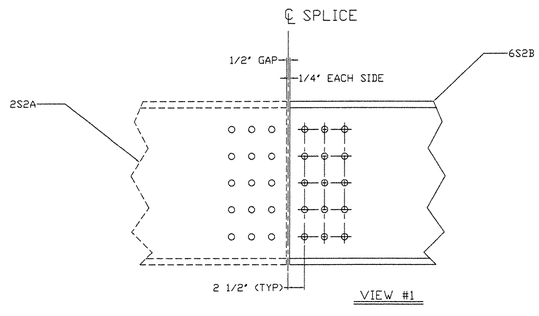

THIS DRAWING IS CORRECTED, REVISED AND RESUBMITTED. REVISED, UNACCEPTABLE

Review of this drawing is only for conformance with the design concept of the project and compliance with the information given in the Contract Documents. The Engineer assumes no liability for errors or omissions in submitted shop drawings. The Contractor, by stamping or submitting these documents, verifies their accuracy and that the Contractor's Shop Drawing Stamp.

7/22/04 RCA

EASTERN BRIDGE LLC
RURAL RTE 2, BOX 202
CLAREMONT, NH 03743
603-542-5202
FABRICATOR

REVISIONS		
NO.	DATE	DESCRIPTION
	7/14/04	FOR APPROVAL

ITEM NO: 506.50

FRANK W. WHITCOMB CONSTRUCTION CORP.
CONTRACT: BHO 1442 (32) VT AOT

CHURCH STREET (TH 5) OVER WILLIAMS RIVER
BRIDGE NO. 11
CHESTER, VT

TITLE: STRINGER DETAIL 6S2B

DRAWN BY 4/26/04 DANA BACON	SHOP ORDER 5025	DWG. NO. 6
CKD BY JH 7/15/04	BLOCK NO.	SHEET NO. 1 OF 1

03455

W24 X 131	
W	2'-0 1/2" X 5/8"
F	1'-0 7/8" X 15/16"

NOTES:

1. ALL HOLES ARE 15/16" DIA.
2. MATERIALS: M270Gr50W (UN)
3. FASTENERS: 7/8" A325 TYPE 3
4. PAINT: NONE.
5. DIMENSION ARE IN FEET & INCHES.
6. GENERAL NOTES: SEE DRAWING GN1
7. ENDS OF BEAMS SHALL BE CUT SQUARE AT ABUTMENTS.
8. ALL STIFFENERS ARE 90° TO BOTTOM FLANGE.

BILL OF MATERIAL

REV. NO:	SHIP MARK	PIECE MARK	QTY.	TYPE OF MATERIAL	SIZE OF MATERIAL	GRADE	LENGTH	FINISH	NOTES	WEIGHT
	7S3B	ST2	1	W	W24 X 131	M270GR50W TZ	71'-8 3/4"		CVN	9397#
	7S3B	CP1	2	PLATE	PL 1/2" X 5"	M270GR50W	1'-10 5/8"			32#
	7S3B	CP2	1	PLATE	PL 1/2" X 8"	M270GR50W	1'-10 5/8"			26#
	7S3B	CP3	2	PLATE	PL 1/2" X 5"	M270GR50W	1'-10 5/8"			32#
	7S3B	CP4	1	PLATE	PL 1/2" X 8"	M270GR50W	1'-10 5/8"			26#

9513

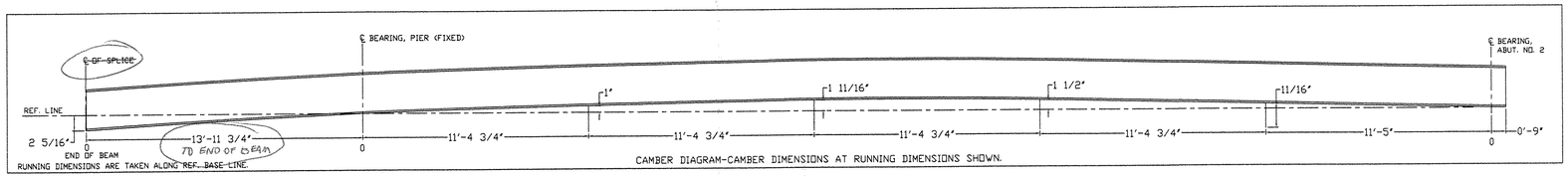

CAMBER DIAGRAM-CAMBER DIMENSIONS AT RUNNING DIMENSIONS SHOWN.

STRINGER 7S3B (1 REQUIRED)

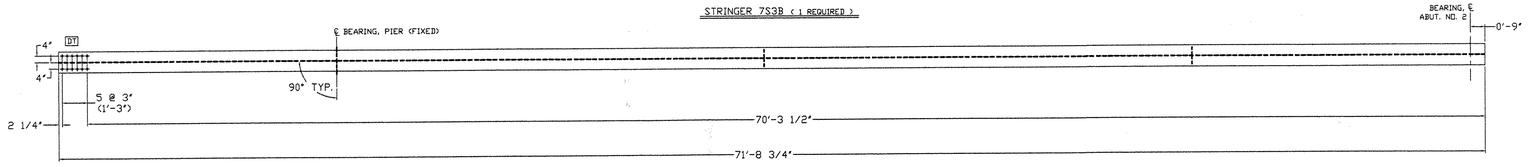

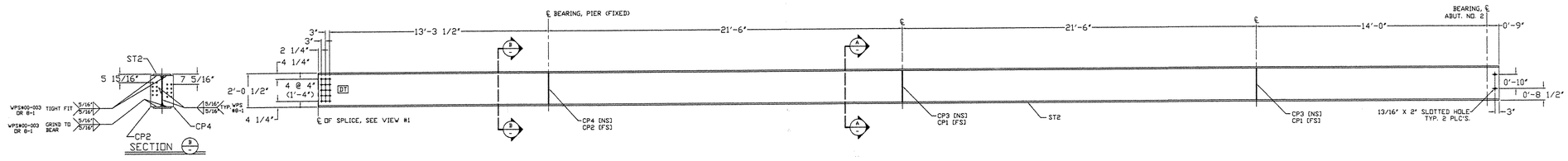

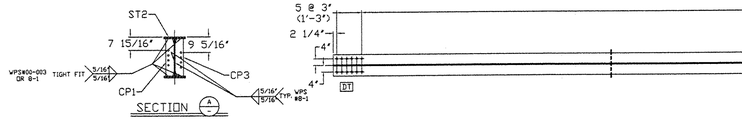

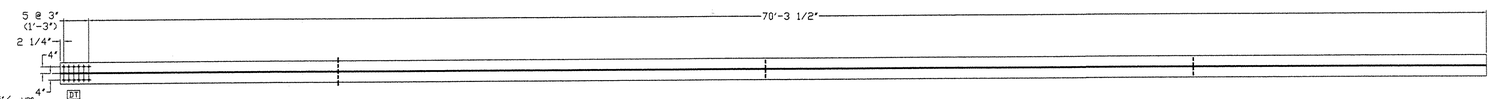

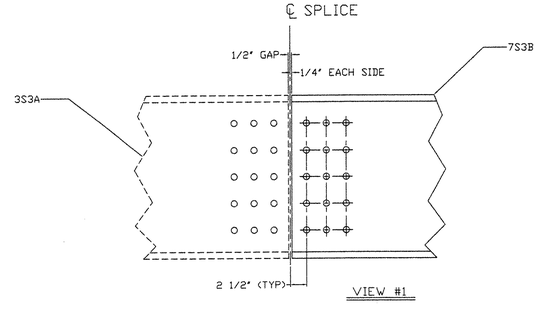

VIEW #1

REVISE CONNECTED
REVISE AND RESUBMIT
UNACCEPTABLE
Approval is only for conformance with the design concept of the project and compliance with the information given in the Contract Documents. The Engineer assumes no liability for errors or omissions that may be contained herein. The Contractor, by shaping and submitting these documents, verifies that they are in accordance with the Contractor's Shop Drawing Plans.

7/22/04 ZBA

EASTERN BRIDGE LLC
RURAL RTE 2, BOX 202
CLAREMONT, NH 03743
603-542-5202
FABRICATOR

ITEM NO. 506.50

REVISIONS		
NO.	DATE	DESCRIPTION
	7/14/04	FOR APPROVAL

FRANK W. WHITCOMB CONSTRUCTION CORP.
CONTRACT : BHO 1442 (32) VT AOT

CHURCH STREET (TH 5) OVER WILLIAMS RIVER
BRIDGE NO. 11
CHESTER, VT

TITLE :
STRINGER DETAIL 7S3B

DRAWN BY 4/26/04 DANA BACON	SHOP ORDER 5025	DWG. NO. 7
CKD BY JH 7/15/04	BLOCK NO.	SHEET NO. 1 OF 1

035 SS

W24 X 131	
W	2'-0 1/2" X 5/8"
F	1'-0 7/8" X 15/16"

NOTES:

1. ALL HOLES ARE 15/16" DIA.
2. MATERIALS: M270Gr50W (UN)
3. FASTENERS: 7/8" A325 TYPE 3
4. PAINT: NONE.
5. DIMENSION ARE IN FEET & INCHES.
6. GENERAL NOTES: SEE DRAWING GN1
7. ENDS OF BEAMS SHALL BE CUT SQUARE AT ABUTMENTS.
8. ALL STIFFENERS ARE 90° TO BOTTOM FLANGE.

BILL OF MATERIAL

REV. NO:	SHIP MARK	PIECE MARK	QTY.	TYPE OF MATERIAL	SIZE OF MATERIAL	GRADE	LENGTH	FINISH	NOTES	WEIGHT
	8S4B	ST1	1	W	W24 X 131	M270GR50W TZ	71'-8 3/4"		CVN	9397#
	8S4B	CP1	2	PLATE	PL 1/2" X 5"	M270GR50W	1'-10 5/8"			32#
	8S4B	CP2	1	PLATE	PL 1/2" X 8"	M270GR50W	1'-10 5/8"			26#
	8S4B	DB1	1	PLATE	PL 1/4" X 3"	M270GR50W	0'-9 3/16"			2#

9457

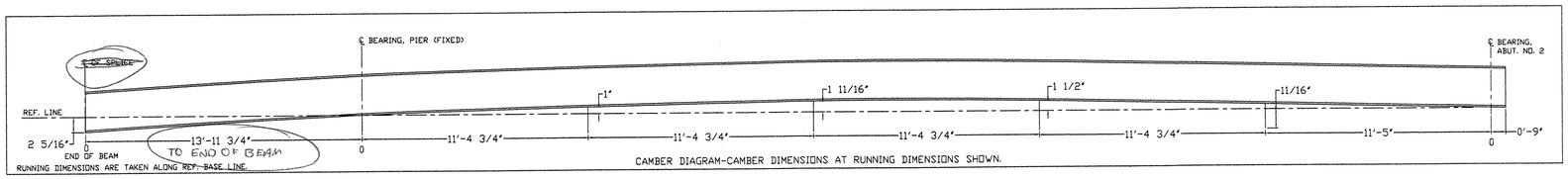

STRINGER 8S4B (1 REQUIRED)

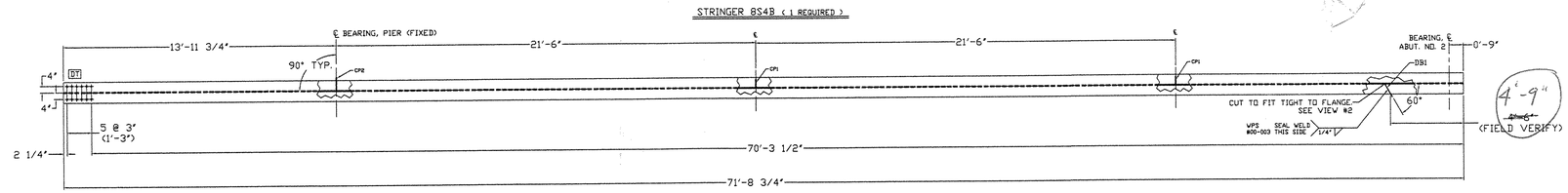

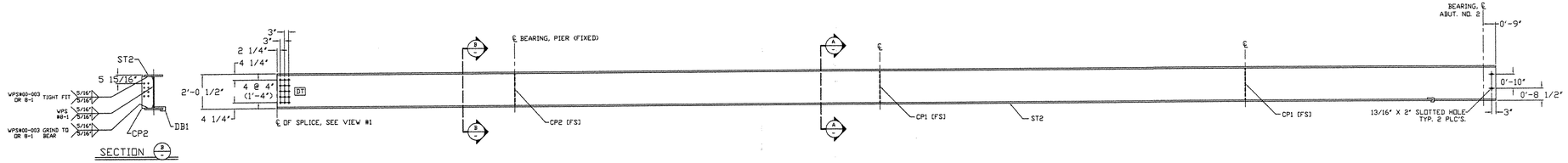

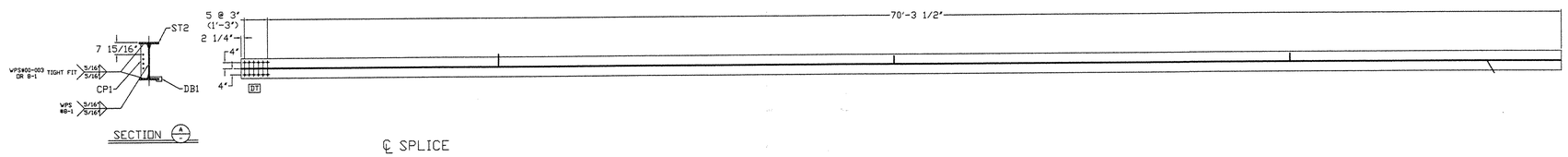

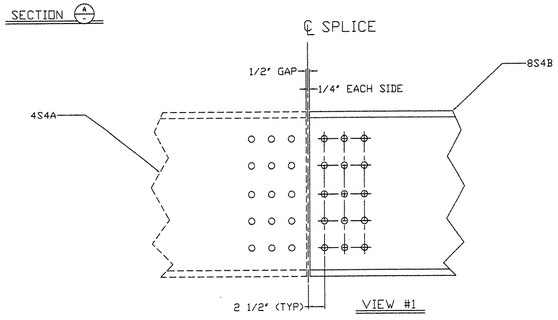

VIEW #1

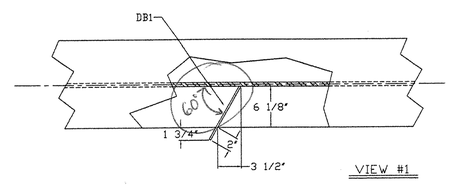

VIEW #1

CORRECTED
REVISE AND RESUBMIT
REJECTED-UNACCEPTABLE

Review is only for conformance with the design concept of the project and compliance with the information given in the Contract Documents. The Engineer assumes no liability for errors or deviations that may be contained herein. The Contractor, by marking and submitting these documents, verifies their accuracy, dimensions and conformance with the Contract Documents.

7/22/04

EASTERN BRIDGE LLC
RURAL RTE 2, BOX 302
CLAREMONT, NH 03743
603-542-5202

FABRICATOR

ITEM NO: 506.50

REVISIONS		
NO.	DATE	DESCRIPTION
	7/14/04	FOR APPROVAL

FRANK W. WHITCOMB CONSTRUCTION CORP.
CONTRACT : BHO 1442 (32) VT ADT

CHURCH STREET (TH 5) OVER WILLIAMS RIVER
BRIDGE NO. 11
CHESTER, VT

TITLE :
STRINGER DETAIL 8S4B

DRAWN BY 4/26/04 DANA BACON	SHOP ORDER 5025	DWG. NO. 8
CKD BY JH 7/15/04	BLOCK NO.	SHEET NO. 1 OF 1

036 53

BILL OF MATERIAL

REV. NO:	SHIP MARK	PIECE MARK	QTY.	TYPE OF MATERIAL	SIZE OF MATERIAL	GRADE	LENGTH	FINISH	NOTES	WEIGHT
		ID1	12	C	C15 X 33.9	M270GR50W	5'-4 3/8"			2182#
		PD1	3	C	C15 X 33.9	M270GR50W	5'-4 3/8"			546#

27 28

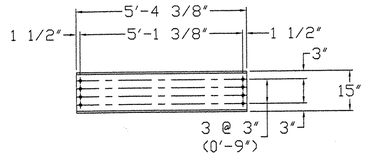

INTERMEDIATE DIAPHRAGM ID1 (12 REQUIRED)

C 15" X 33.9" X 5'-4 3/8"

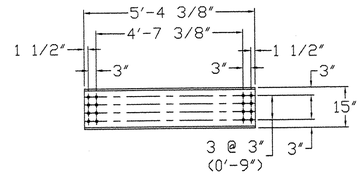

PIER DIAPHRAGM PD1 (3 REQUIRED)

C 15" X 33.9" X 5'-4 3/8"

NOTES:

1. ALL HOLES ARE 15/16" DIA.
2. MATERIALS: M270Gr50W (UN)
3. FASTENERS: 7/8" A325 TYPE 3
4. PAINT: NONE.
5. DIMENSION ARE IN FEET & INCHES.
6. GENERAL NOTES: SEE DRAWING GN1
7. ENDS OF BEAMS SHALL BE CUT SQUARE AT ABUTMENTS.
8. ALL STIFFENERS ARE 90° TO BOTTOM FLANGE.

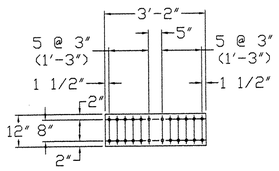

FLANGE SPLICE PLATE SP1 (8 REQUIRED)

PL 3/4" X 12" X 3'-2"

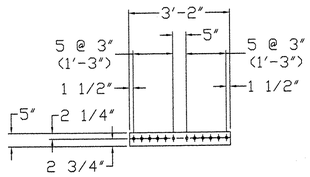

FLANGE SPLICE PLATE SP2 (16 REQUIRED)

PL 3/4" X 5" X 3'-2"

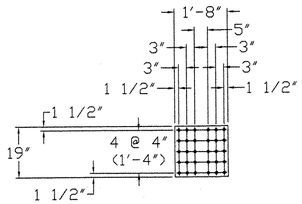

WEB SPLICE PLATE SP3 (8 REQUIRED)

PL 3/8" X 19" X 1'-8"

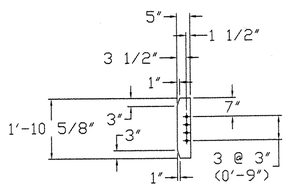

CONNECTION PLATE CP1 (16 REQUIRED)

PL 1/2" X 5" X 1'-10 5/8"

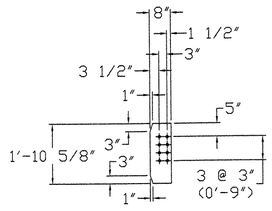

CONNECTION PLATE CP2 (4 REQUIRED)

PL 1/2" X 8" X 1'-10 5/8"

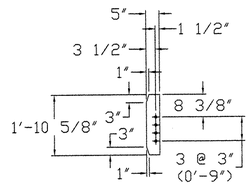

CONNECTION PLATE CP3 (8 REQUIRED)

PL 1/2" X 5" X 1'-10 5/8"

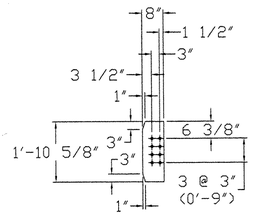

CONNECTION PLATE CP4 (2 REQUIRED)

PL 1/2" X 8" X 1'-10 5/8"

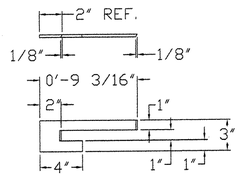

DRIP BAR DB1 (2 REQUIRED)

PL 1/4" X 3" X 0'-9 3/16"

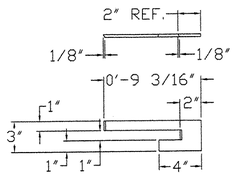

DRIP BAR DB2 (2 REQUIRED)

PL 1/4" X 3" X 0'-9 3/16"

NOT APPROVED AS CORRECTED
NOT APPROVED - REVISE AND RESUBMIT
RECEIVED - UNACCEPTABLE
Review is only for conformance with the design concept of the project and compliance with the information given in the Contract Documents. The Engineer assumes no liability for errors or omissions that may be contained herein. The Contractor, by reviewing and submitting these documents, verifies that errors as stated in the Contractor's Shop Drawing Stamp.
DATE OF REVIEW OF SHOP DRAWING
7/22/04 RCA

EASTERN BRIDGE, LLC
RURAL RTE 2, BOX 302
CLAREMONT, NH 03743
603-542-5202
FABRICATOR

REVISIONS		
NO.	DATE	DESCRIPTION
	7/14/04	FOR APPROVAL

ITEM NO: 506.50

FRANK W. WHITCOMB CONSTRUCTION CORP.
CONTRACT : BHO 1442 (32) VT ADT

CHURCH STREET (TH 5) OVER WILLIAMS RIVER
BRIDGE NO. 11
CHESTER, VT

TITLE :
PARTS DETAILS

DRAWN BY 4/26/04 DANA BACON	SHOP ORDER 5025	DWG. NO. 9
CKD BY JH 7/15/04	BLOCK NO.	SHEET NO. 1 OF 1

037 55

NOTES:

1. ALL HOLES ARE 15/16" DIA.
2. MATERIALS: M270Gr50W
3. FASTENERS: 7/8" A325 TYPE 3
4. PAINT: NONE.
5. DIMENSION ARE IN FEET & INCHES.
6. GENERAL NOTES: SEE DRAWING GN1

BILL OF MATERIAL

REV. NO:	SHIP MARK	PIECE MARK	QTY.	TYPE OF MATERIAL	SIZE OF MATERIAL	GRADE	LENGTH	FINISH	NOTES	WEIGHT

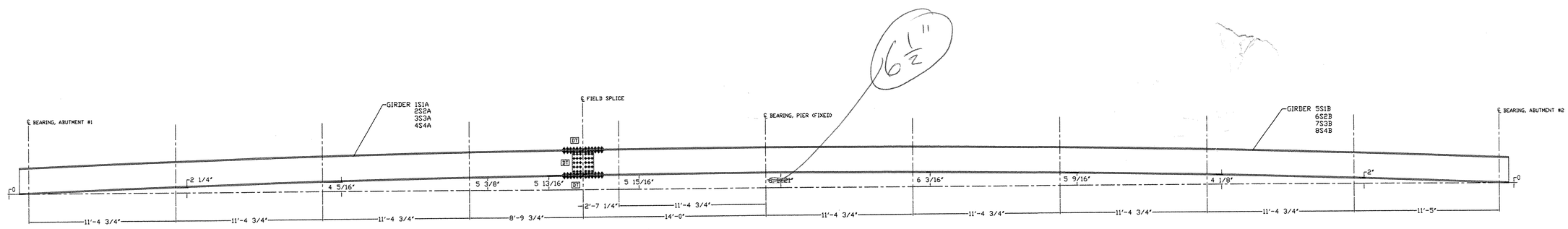

ELEVATION DIMENSIONS ARE AT ORDINATE SHOWN

CORRECTED
REVISE AND RESUBMIT
REJECTED - UNACCEPTABLE
Review is only for conformance with the design concept of the project and compliance with the information given in the Contract Documents. The Engineer assumes no liability for errors or omissions that may be contained herein. The Contractor, by marking the submittal, these documents, verifies that they are aligned with the Contractor's Shop Drawing Series, Dimensions and Notes.

7/22/04 BOA

ITEM NO: 506.50

REVISIONS		
NO.	DATE	DESCRIPTION
	7/14/04	FOR APPROVAL

FRANK W. WHITCOMB CONSTRUCTION CORP.
CONTRACT: BHO 1442 (32) VT ADT

CHURCH STREET (TH 5) OVER WILLIAMS RIVER
BRIDGE NO. 11
CHESTER, VT

TITLE: BLOCKING DIAGRAM

DRAWN BY 7/8/04 DANA BACON
SHOP ORDER 5025
DWG. NO. 10
CKD BY JH 7/15/04
BLOCK NO.
SHEET NO. 1 OF 1

EASTERN BRIDGE LLC
RURAL RTE 2, BOX 302
CLAIREMONT, NH 03743
603-542-5092
FABRICATOR

03855

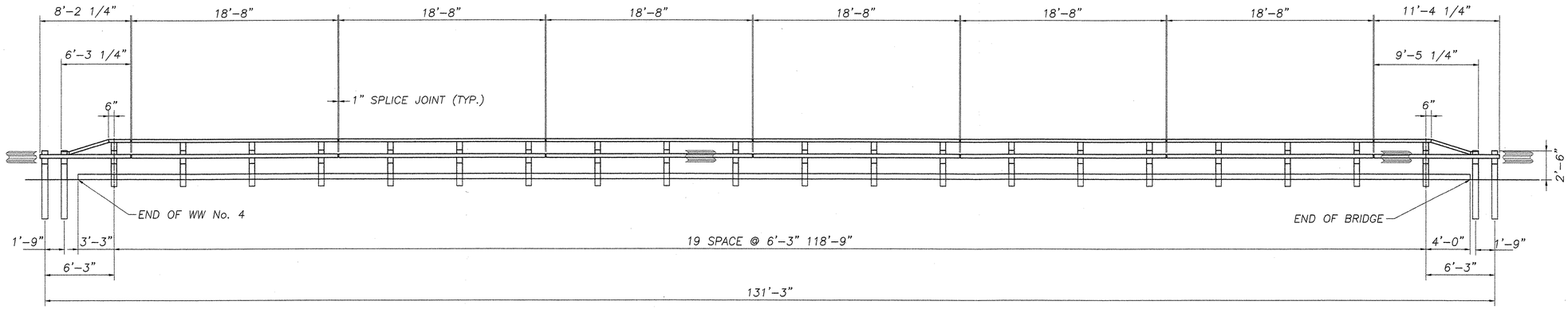

ELEVATION – RIGHT BRIDGE RAILING

BILL OF MATERIAL (BOTH SIDES OF BRIDGE)		
Qty.	Description	Material
41	FASCIA MOUNTED POST W8x24 x 4'-1"	A572 GR 50
8	TRANSITION POST W8x24 x 6'-0"	A572 GR 50
14	SPLICE CHANNEL C7x12.25 x 2'-7"	A572 GR 50
98	TUBE BLOCKOUTS TS 8x4x3/16 x 6" LG	A500 GR B
12	RAIL TUBE TS 8x4x3/16 x 18'-8" OAL	A500 GR B
1	RAIL TUBE TS 8x4x3/16 x 14'-5 1/4" OAL	A500 GR B
2	RAIL TUBE TS 8x4x3/16 x 11'-4 1/4" OAL	A500 GR B
1	RAIL TUBE TS 8x4x3/16 x 8'-2 1/4" OAL	A500 GR B
22	10 GA. HDSB RAIL 12'-6" / 6'-3"	M180 B2
1	10 GA. HDSB RAIL 6'-3"	M180 B2
12	HAND RAIL TUBE TS 6x3x1/4 x 18'-8" OAL	A500 GR B
1	HAND RAIL TUBE (DROP END)TS 6x3x1/4 x 12'-6 1/4"	A500 GR B
2	HAND RAIL TUBE (DROP END)TS 6x3x1/4 x 9'-5 1/4"	A500 GR B
1	HAND RAIL TUBE (DROP END)TS 6x3x1/4 x 6'-3 1/4"	A500 GR B
28	SPLICE PLATE – HAND RAIL TUBE 3/4"x5"x2'-7"	A572 GR 50
41	SHELF ANGLE L5x3 1/2x3/8 6 1/2" LG.	A36
49	5/8" x 13" HEX BOLT	A325
49	5/8" x 10" HEX BOLT	A325
236	5/8" x 2" HEX BOLT	A325
41	5/8" x 4 1/2" HEX BOLT	A325
56	3/4" x 4" HEX BOLT	A325
49	RECTANGULAR WASHER 3/16" x 1-3/4" x 3"	A572 GR 50
147	5/8" HEX NUT	A563 DH
228	5/8" HEX NUT	A563
56	3/4" HEX NUT	A563
56	3/4" FLAT WASHER	F436
563	5/8" ROUND WASHER	F436
176	5/8" x 1 1/4" PANEL SPLICE BOLT	A307
176	5/8" DBL RECESSED NUT	A563A
* 82	1"ø U-SHAPED ANCHOR RODS	A449
* 328	1"ø HEX NUT	A194 GR 2H
* 164	1/4" x 2" x 5" PLATE WASHER	A572 GR 50
* 328	1"ø PLAIN WASHER	F436

(*) PROVIDED BY OTHERS, NOT SUPPLIED BY HIGHWAY SAFETY CORPORATION. SHOWN FOR REFERENCE ONLY.

TOTAL ITEM 525.43 LENGTH = 269'

THE BILL OF MATERIALS HAS NOT BEEN CHECKED BY THE REVIEWER.

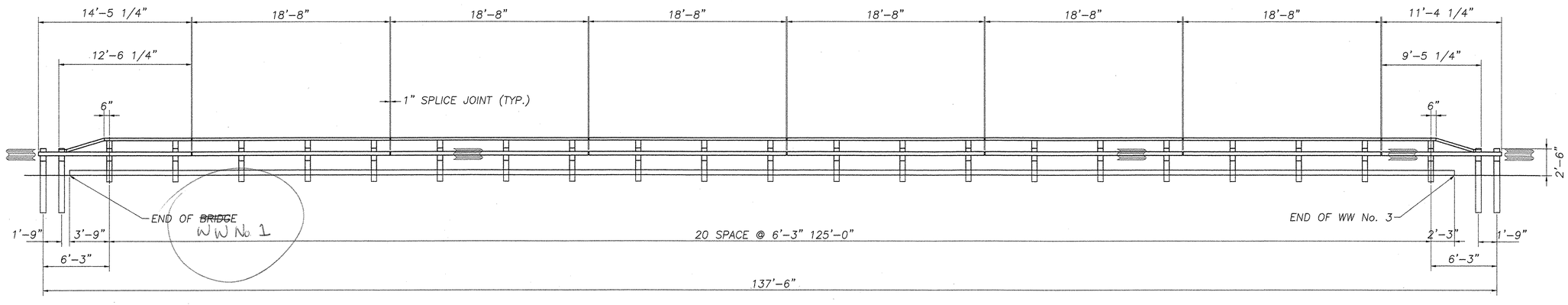

ELEVATION – LEFT BRIDGE RAILING

REVISIONS		
No.	Remarks	Date
0	Initial submittal	9/25/04

ACCEPTED
ACCEPTED AS CORRECTED ✓
REJECTED, REVISE AND RESUBMIT
REJECTED, UNACCEPTABLE
Checking is only for conformance with the design concept of the project and compliance with the information given in the Contract Documents. The Engineer assumes no liability for errors or omissions. Fabrication is at Contractor's risk. The Contractor is responsible for submitting these documents, verifying their accuracy as shown on the Contractor's Shop Drawing Stamp.
Date 6/15/04 By

HIGHWAY SAFETY CORP.

GLASTONBURY, CT

ITEM 525.43 STEEL BRIDGE RAIL – HDSB W/HANDRAIL
BRIDGE NO. 11 HIGHWAY NO. TH 5
TOWN OF CHESTER, WINDSOR COUNTY
CHURCH STREET OVER WILLIAMS RIVER
PROJECT NO. ~~TH 3-9637~~ BRO 1442(32)

GENERAL CONTRACTOR

SUB CONTRACTOR F.R. LAFAYETTE, INC.

DRAWN	MHM
CHECKED	
DATE	5/15/04
SCALE	N.T.S
HSC REFERENCE NO.	1445
SIZE D	REVISION 0
SHEET NO.	1 of 2

039 BR

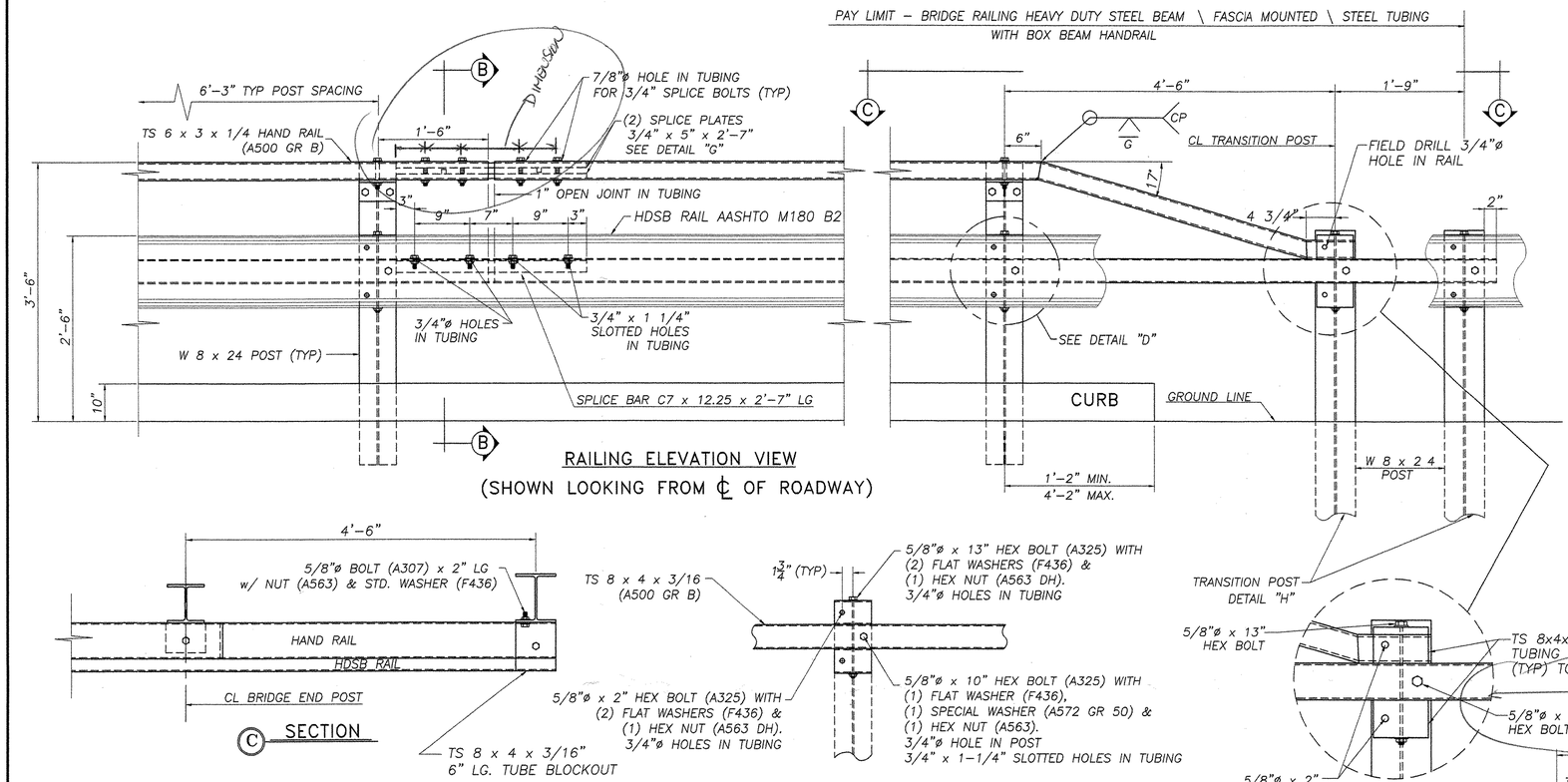

RAILING ELEVATION VIEW
(SHOWN LOOKING FROM ℄ OF ROADWAY)

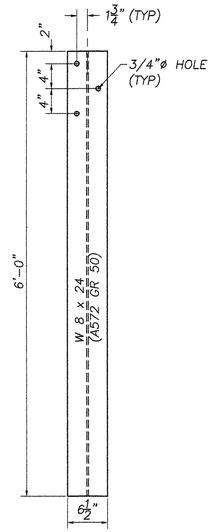

DETAIL "H"
TRANSITION POST
W8x24 (A572 GR 50)

GENERAL ERECTION NOTES

1. Heavy duty steel beam guard rail shall conform to VT. specification 732. AASHTO M180 B2
2. Structural steel tubing shall conform to VT. specification 732. ASTM A500 gr B
3. Anchor bolts, nuts and washers shall be galvanized in accordance with AASHTO M 232 and shall conform to VT. specification 714 unless otherwise noted.
4. Bridge rail posts, special washers, splice bars and plate washers shall conform to AASHTO M 223 / M 223M and shall be galvanized after fabrication in accordance with AASHTO M 111. Prior to galvanizing all corners and edges of steel plates, shapes, etc., shall be ground to a 1/16" radius.
5. See standard drawing G–1 and G–1d for additional details concerning guard rail.
6. See standard drawing SB–R6–82 for approach rail details and for information relative to schedule I and schedule II. All approach rail shall be heavy duty steel beam guard rail. Also see Std. Dwg. SB–R6–82 for handrail details (except end details) if hand rail is required.
7. All posts shall be set normal to grade.
8. Splices for the steel beam guard rail shall lap in the direction of traffic.
9. See Standard drawing G–1 for details of delineators. A delineator shall be located at every fifth post. Payment shall be subsidiary to other items.
10. A railing joint splice shall be provided at each superstructure expansion joint.
11. All field cut or drilled areas shall be coated with zinc rich paint.
12. For radii less than 950 feet, the steel tubing shall be shop bent to fit the applicable curve.
13. The drop–weight tear test in section 732 shall not apply to the structural tubing on this standard.
14. All bolts and related hardware shall conform to AASHTO M164 type 1 bolts, hot dipped or mechanically galvanized per specification.

Ⓒ SECTION

DETAIL "D"
STEEL BEAM GUARD RAIL NOT SHOWN

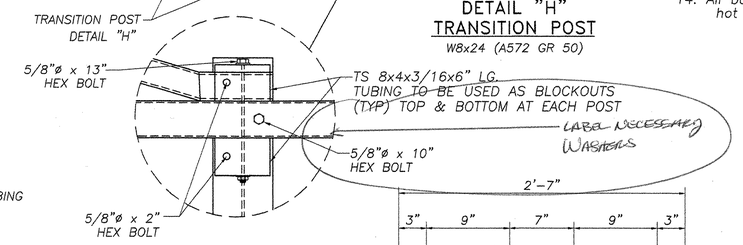

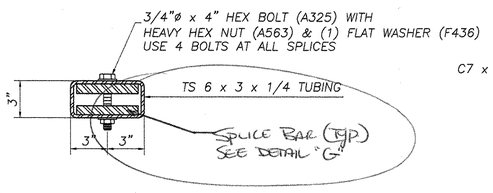

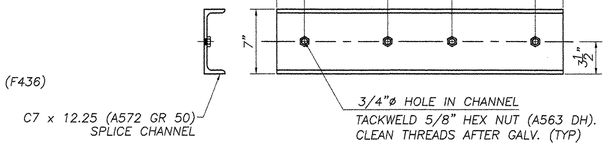

SPLICE BAR DETAIL

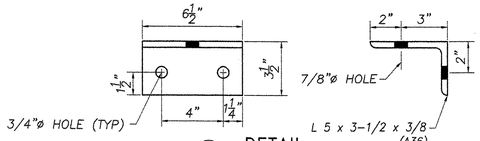

Ⓔ DETAIL
SHELF BRACKET

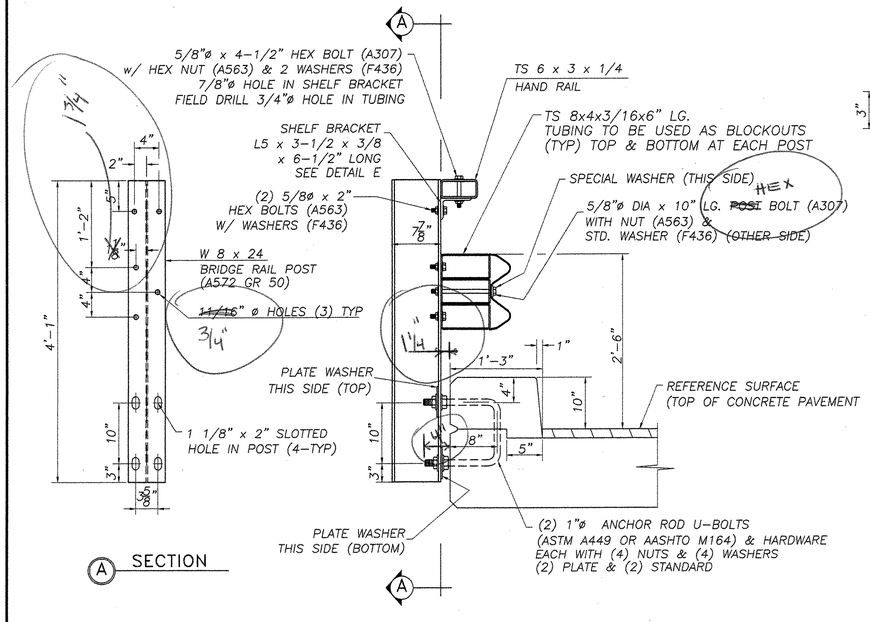

Ⓐ SECTION

FASCIA MOUNTED POST WITH CURB
W 8 x 24 (A572 GR 50)

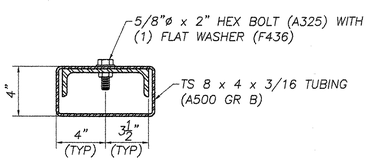

Ⓑ PARTIAL SECTION
SHOWING HAND RAIL TUBE, BRIDGE RAIL TUBE & SPLICE BARS

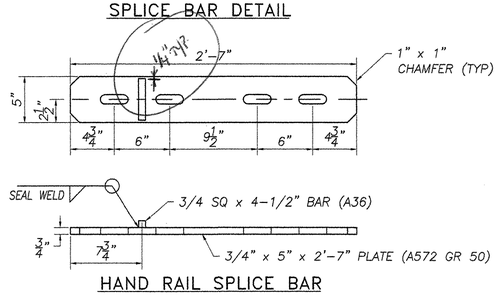

HAND RAIL SPLICE BAR
DETAIL "G"

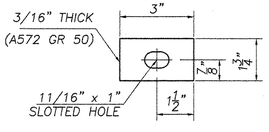

SPECIAL WASHER DETAIL

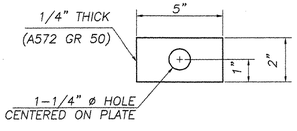

PLATE WASHER DETAIL

REVISIONS		
No.	Remarks	Date
0	Initial submittal	5/28/04

ACCEPTED
ACCEPTED AS CORRECTED
REJECTED, REVISE AND RESUBMIT
REJECTED, UNACCEPTABLE
Checking is only for conformance with the design concept of the project and compliance with the information given in the Contract Documents. The Contractor is responsible for errors, omissions, etc. in connection therewith. The Contractor is responsible for coordinating these documents, verifying field conditions and dimensions in the Contractor's Shop Drawing Submittal.
Date 6/15/04 By RCA

HIGHWAY SAFETY CORP.
GLASTONBURY, CT

ITEM 525.43 STEEL BRIDGE RAIL – HDSB W/HANDRAIL
BRIDGE NO. 11 HIGHWAY NO. TH 5
TOWN OF CHESTER, WINDSOR COUNTY
CHURCH STREET OVER WILLIAMS RIVER
PROJECT NO. TH 3-9637

GENERAL CONTRACTOR: BRO 1442(32)
SUB CONTRACTOR: F.R. LAFAYETTE, INC.

DRAWN	MHM
CHECKED	
DATE	5/15/04
SCALE	N.T.S
HSC REFERENCE NO.	1445
SIZE	D
REVISION	0
SHEET NO.	2 of 2