STATE OF VERMONT
AGENCY OF TRANSPORTATION

INDEX OF SHEETS
SEE SHEET #2

RECORD DRAWINGS INCLUDED IN THIS SET ARE SHEETS 1–37 AND 42. INFORMATION SHOWN ON SHEETS 38–41 (ELECTRICAL AND MECHANICAL DRAWINGS) WILL BE UPDATED IN THE OPERATIONS AND MAINTENANCE MANUAL, IF APPLICABLE. VAOT RIGHT–OF–WAY SHEETS (43–55) AND STANDARD DETAIL SHEETS ARE NOT INCLUDED IN THIS SET. PROPERTY INFORMATION HAS BEEN UPDATED ON SHEETS 9, 10, 12, 13 AND 23.

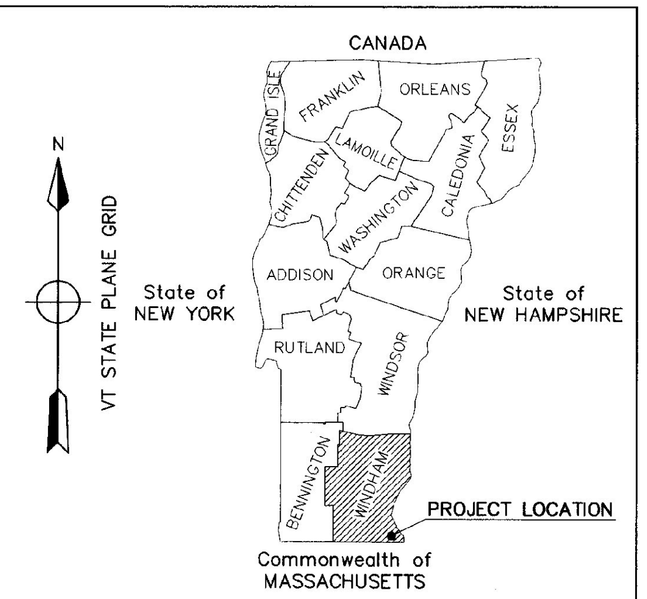

PROPOSED IMPROVEMENT
TOWN OF BRATTLEBORO
TOWN OF GUILFORD
COUNTY OF WINDHAM

WATER AND SEWER EXTENSIONS TO SERVICE THE PROPOSED SOUTHEAST VERMONT WELCOME CENTER

WATER AND SEWER EXTENSIONS ARE DESCRIBED AS FOLLOWS:

WATER: BEGINNING AT A POINT OF CONNECTION TO THE EXISTING SYSTEM ON TH–83 (JOHN SEITZ DRIVE) IN THE TOWN OF BRATTLEBORO, EXTENDING NORTH FOR ~~171~~ METERS, EAST FOR ~~253~~ METERS AND UNDER INTERSTATE I–91 TO TH–9 (OLD GUILFORD ROAD), THEN SOUTH FOR ~~1,676~~ METERS, PARALLELING THE INTERSTATE AND THROUGH FORT DUMMER STATE PARK, CROSSING BROAD BROOK TO A POINT ON TH–27 (BROAD BROOK ROAD) ~~0.644~~ KILOMETERS SOUTHEAST OF THE INTERSECTION OF TH–27 (BROAD BROOK ROAD) AND ROUTE 5 IN THE TOWN OF GUILFORD. A WATER LINE BRANCH WILL BE CONSTRUCTED NORTHERLY ALONG TH–9 (OLD GUILFORD ROAD) FOR A DISTANCE OF ~~344~~ METERS.

SEWER: BEGINNING AT A POINT OF CONNECTION TO THE EXISTING COLLECTION SYSTEM ~~183~~ METERS EAST OF THE INTERSECTION OF COTTON MILL HILL ROAD AND TH–9 (OLD GUILFORD ROAD) IN THE TOWN OF BRATTLEBORO, EXTENDING SOUTH THROUGH THE FORT DUMMER BALL FIELD, ALONG TH–9 (OLD GUILFORD ROAD) (INCLUDING BOX CULVERT REPLACEMENT), PARALLELING THE WATER MAIN ALIGNMENT TO TH–27 (BROAD BROOK ROAD), UNDER THE INTERSTATE I–91 OVERPASS TO A NEW WASTEWATER PUMP STATION LOCATED ON TH–27 (BROAD BROOK ROAD), ~~0.322~~ KILOMETERS SOUTHEAST OF THE INTERSECTION OF TH–27 (BROAD BROOK ROAD) AND ROUTE 5 IN THE TOWN OF GUILFORD.

LENGTH OF WATER MAIN EXTENSION: 2,480 METERS 2.480 KILOMETERS
LENGTH OF SEWER MAIN EXTENSION: 3,618 METERS 3.618 KILOMETERS

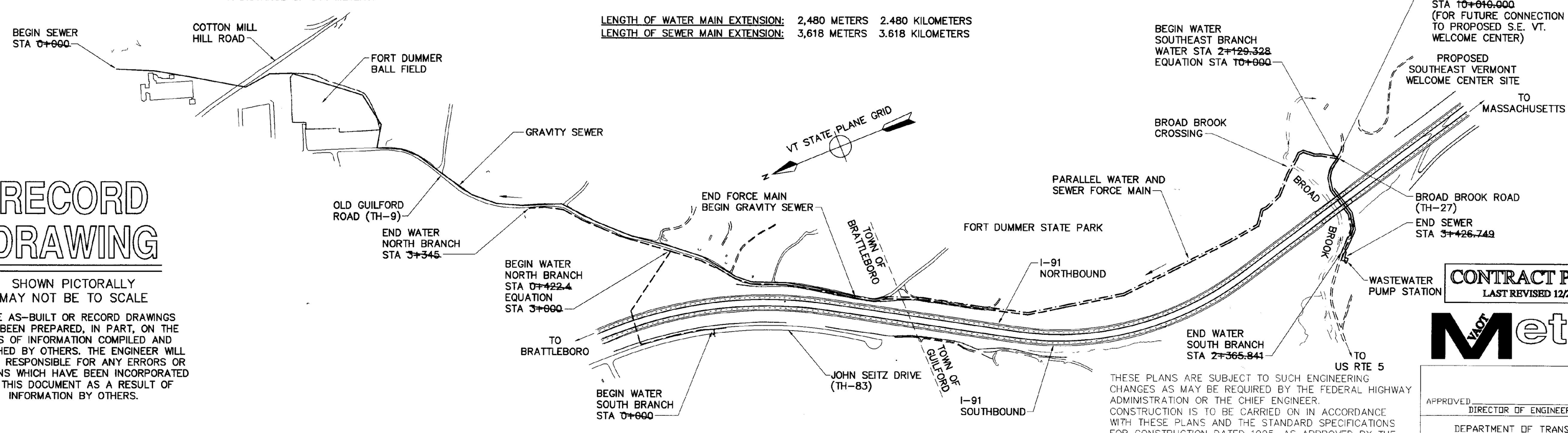

RECORD DRAWING

SHOWN PICTORALLY
MAY NOT BE TO SCALE

THESE AS–BUILT OR RECORD DRAWINGS HAVE BEEN PREPARED, IN PART, ON THE BASIS OF INFORMATION COMPILED AND FURNISHED BY OTHERS. THE ENGINEER WILL NOT BE RESPONSIBLE FOR ANY ERRORS OR OMISSIONS WHICH HAVE BEEN INCORPORATED INTO THIS DOCUMENT AS A RESULT OF INFORMATION BY OTHERS.

DATUM
VERTICAL USGS
HORIZONTAL NAD 1927

CONTRACT PLANS
LAST REVISED 12/26/96

VAOT Metric

THESE PLANS ARE SUBJECT TO SUCH ENGINEERING CHANGES AS MAY BE REQUIRED BY THE FEDERAL HIGHWAY ADMINISTRATION OR THE CHIEF ENGINEER. CONSTRUCTION IS TO BE CARRIED ON IN ACCORDANCE WITH THESE PLANS AND THE STANDARD SPECIFICATIONS FOR CONSTRUCTION DATED 1995, AS APPROVED BY THE FEDERAL HIGHWAY ADMINISTRATION ON AUGUST 21, 1995 FOR USE ON THIS PROJECT, INCLUDING ALL SUBSEQUENT REVISIONS AND SUCH REVISED SPECIFICATIONS AND SPECIAL PROVISIONS AS ARE INCORPORATED IN THESE PLANS.

APPROVED _____ DATE _____
DIRECTOR OF ENGINEERING

DEPARTMENT OF TRANSPORTATION
FEDERAL HIGHWAY ADMINISTRATION

APPROVED _____ DATE _____
DIVISION ADMINISTRATOR

PROJECT

SHEET 1 OF 55 SHEETS

NO.	DATE	REVISIONS	DRWN	CHKD
5	9/30/98	NO AS–BUILT INFORMATION ADDED	DSM	KAS
~~4~~	~~12/26/96~~	~~CONTRACT PLANS~~	DSM	JAC
3	11/11/96	FINAL REVIEW REVISIONS	DSM	JAC
2	6/4/96	REVISIONS PER REVIEW COMMENTS	DSM	JAC
1	4/8/96	REVISIONS PER REVIEW COMMENTS	DSM	JAC

TIMOTHY D. SMITH & ASSOCIATES, PC ARCHITECTS
OLD RAILROAD STATION NORTH BENNINGTON, VERMONT 05257
802–442–8184 FAX 802–442–5241
WRIGHT ENGINEERING, LTD. CIVIL ENGINEERS
128 MERCHANTS ROW – P.O. BOX 176 RUTLAND, VERMONT 05702–0176
802–775–2511 FAX 802–775–8915

PROJECT NO.IM 091–1 (29)
WATER & SEWER EXTENSION PROJECT
TOWN OF GUILFORD
TOWN OF BRATTLEBORO

SHEET TITLE: TITLE SHEET

DSGN BY: JAC
DRWN BY: DSM
CHKD BY: JAC
CHKD BY: MPY

STATE OF VERMONT
AGENCY OF TRANSPORTATION
SOUTHEAST VERMONT WELCOME CENTER
GUILFORD, VERMONT

DATE: 1–2–96 SHEET NO. 1 OF 55 SHEETS

C:\ACAD12\950\1950114SB Thu Oct 8 13:12:16 1998

ABBREVIATIONS

ABS	– ACRYLONITRILE BUTADIENE STYRENE	L	– LITRE
AC	– ASBESTOS CEMENT	LAT	– LATERAL
ACCGMP	– ASPHALT COATED CORRUGATED GALVANIZED METAL PIPE	LG	– LONG
		LP	– LIGHT POLE
ALUM	– ALUMINUM	LR	– LONG RADIUS
APPROX	– APPROXIMATE	LWL	– LOW WATER LEVEL
ARMH	– AIR RELEASE MANHOLE	m	– METER
ASPH	– ASPHALT	MAT'L	– MATERIAL
@	– AT	MAX	– MAXIMUM
AVE	– AVENUE	MBX	– MAIL BOX
BIT	– BITUMINOUS	MFR	– MANUFACTURER
BLDG	– BUILDING	MH	– MANHOLE
BOTT	– BOTTOM	MIN	– MINIMUM
BM	– BENCH MARK	mm	– MILLIMETER
°C	– DEGREES CELSIUS	m/s	– METERS PER SECOND
CI	– CAST IRON	MJ	– MECHANICAL JOINT
CB	– CATCH BASIN	N	– NORTH
℄	– CENTERLINE	NLTD	– NO LEDGE TO DEPTH
CHK V	– CHECK VALVE	NTS	– NOT TO SCALE
CL_2	– CHLORINE	NWTD	– NO WATER TO DEPTH
CL	– CLASS	OC	– ON CENTER
CONC	– CONCRETE	OD	– OUTSIDE DIAMETER
CM	– CONCRETE MARKER	OPP	– OPPOSITE
CMP	– CORRUGATED METAL PIPE	PE	– POLYETHYLENE OR PLAIN END
CONN	– CONNECT OR CONNECTION	PP	– POWER POLE
CONST	– CONSTRUCTION	PRESS	– PRESSURE
CONT	– CONTINUOUS OR CONTINUATION	℞	– PROPERT LINE
CORP	– CORPORATION STOP	PROP	– PROPOSED
CR	– CRUSHED	PS	– PUMP STATION
CRNR	– CORNER	PT	– PRESSURE TREATED
CS	– CURB STOP	PSI	– POUNDS PER SQUARE INCH
CTR	– CONTRACTOR	PVC	– POLYVINYL CHLORIDE
CU	– COPPER	PVMT	– PAVEMENT
X-ING	– CROSSING	RCP	– REINFORCED CONCRETE PIPE
CULV	– CULVERT	RD	– ROAD
DET	– DETAIL	RED	– REDUCER
DIA	– DIAMETER	REINF	– REINFORCING OR REINFORCED
DISCH	– DISCHARGE	REQ'D	– REQUIRED
DIV	– DIVISION	RET	– RETAINER OR RETAINING
DR	– DRAIN OR DRIVE	ROW	– RIGHT OF WAY
DI	– DUCTILE IRON	RR	– RAILROAD
E	– EAST	RS	– ROUGH SAWN
ECC	– ECCENTRIC	RT	– RIGHT
ELEC	– ELECTRIC OR ELECTRICAL	RTE	– ROUTE
EL OR ELEV	– ELEVATION	S	– SOUTH
ELL	– ELBOW	SAN	– SANITARY SEWER
ENGR	– ENGINEER	SB	– SOIL BORING
ENT	– ENTRANCE	SHT	– SHEET
EXIST	– EXISTING	SIP	– SPIKE IN POLE
EXT	– EXTERIOR	SIR	– SPIKE IN ROOT
FF	– FINISHED FLOOR	SO	– SHUT-OFF
FIN	– FINISHED	SPEC	– SPECIFICATION
FL	– FLOOR	SQ	– SQUARE
FLEX	– FLEXIBLE	SS	– STAINLESS STEEL
FT	– FOOT OR FEET	ST	– STORM SEWER
FM	– FORCE MAIN	STA	– STATION
GPM	– GALLONS PER MINUTE	STP	– SEWAGE TREATMENT PLANT
GSP	– GALVANIZED STEEL PIPE	ST	– STREET
GV	– GATE VALVE	SUCT	– SUCTION
GRAV	– GRAVITY	SW	– SIDEWALK
GRND	– GROUND	TBM	– TEMPORARY BENCH MARK
GRVL	– GRAVEL	TB	– THRUST BLOCK
GWL	– GROUND WATER LEVEL	TDH	– TOTAL DYNAMIC HEAD
HEX	– HEXAGON	TELE	– TELEPHONE
HWL	– HIGH WATER LEVEL	THK	– THICK
HORIZ	– HORIZONTAL	TP	– TEST PIT
HSE	– HOUSE	TYP	– TYPICAL
HYD	– HYDRANT	VAOT	– VERMONT AGENCY OF TRANSPORTATION
IN	– INCHES	VC	– VITRIFIED CLAY
INCR	– INCREASER	VERT	– VERTICAL
INFO	– INFORMATION	V	– VALVE
INTER	– INTERSECTION	VT HD	– VERMONT HIGHWAY DEPARTMENT
INV	– INVERT	W	– WIDE, WATER OR WEST
IP	– IRON PIPE OR PIN	WL	– WATER LEVEL
IPF	– IRON PIPE/PIN FOUND	W/	– WITH
IPS	– IRON PIPE/PIN SET	WSO	– WATER SHUT-OFF
kg	– KILOGRAMS		
kPa	– KILOPASCAL		

RECORD DRAWING

SHOWN PICTORALLY
MAY NOT BE TO SCALE

THESE AS-BUILT OR RECORD DRAWINGS HAVE BEEN PREPARED, IN PART, ON THE BASIS OF INFORMATION COMPILED AND FURNISHED BY OTHERS. THE ENGINEER WILL NOT BE RESPONSIBLE FOR ANY ERRORS OR OMISSIONS WHICH HAVE BEEN INCORPORATED INTO THIS DOCUMENT AS A RESULT OF INFORMATION BY OTHERS.

SHEET INDEX

SHT NO.	SHEET TITLE
1	TITLE SHEET
2	GENERAL INFORMATION
3	QUANTITY SHEET
4	DRAWING LOCATION PLAN
5	SANITARY SEWER PLAN AND PROFILE
6	SANITARY SEWER PLAN AND PROFILE
7	SANITARY SEWER PLAN AND PROFILE
8	SANITARY SEWER/WATER PLAN AND SANITARY SEWER PROFILE
9	WATER MAIN PLAN
10	SANITARY SEWER/WATER PLAN AND SANITARY SEWER PROFILE
11	SANITARY SEWER/WATER PLAN AND SANITARY SEWER PROFILE
12	SANITARY SEWER/WATER PLAN AND SANITARY SEWER PROFILE
13	SANITARY SEWER/WATER PLAN AND SANITARY SEWER PROFILE
14	SANITARY SEWER/WATER PLAN AND SANITARY SEWER PROFILE
15	SANITARY SEWER/WATER PLAN AND SANITARY SEWER PROFILE
16	SANITARY SEWER/WATER PLAN AND SANITARY SEWER PROFILE
17	WATER MAIN PROFILE
18	WATER MAIN PROFILE
19	WATER MAIN TO PUMP STATION PROFILE
20	RIVER CROSSING PLAN, PROFILES AND DETAILS
21	OLD GUILFORD ROAD REALIGNMENT
22	BOX CULVERT AND GABION DETAILS
23	PUMP STATION SITE PLAN
24	PUMP STATION PLANS AND SECTIONS – ARCHITECTURAL
25	PUMP STATION BUILDING ELEVATIONS AND FINISH SCHEDULE – ARCHITECTURAL
26	PUMP STATION DETAILS, WINDOW SCHEDULE AND DETAILS
27	PUMP STATION DETAILS, DOOR LINTEL MARKS, DOOR FRAME DETAILS
28	PUMP STATION BASE SLAB PLANS – STRUCTURAL
29	PUMP STATION FOUNDATION AND FIRST FLOOR SLAB PLANS – STRUCTURAL
30	PUMP STATION SECTIONS – STRUCTURAL
31	PUMP STATION SECTIONS AND DETAILS – STRUCTURAL
32	STRUCTURAL NOTES
33	PUMP STATION PLANS, SECTIONS AND METERING MANHOLE DETAIL
34	MISCELLANEOUS DETAILS
35	MISCELLANEOUS DETAILS
36	SUB-SURFACE EXPLORATION
37	SUB-SURFACE EXPLORATION
38	ELECTRICAL LEGEND, DETAILS, WIRING DIAGRAM AND SITE PLAN
39	PUMP STATION ELECTRICAL AND LIGHTING PLANS, SCHEDULES AND DETAILS
40	ELECTRICAL WIRING DIAGRAM AND PANEL SCHEDULES
41	PUMP STATION HEATING, VENTILATION, AND PLUMBING
42	TRAFFIC CONTROL PLAN
43	TABLE OF PROJECT PROPERTY ACQUISITION (R.O.W. ONLY)
44	SANITARY SEWER PLAN AND PROFILE (R.O.W. ONLY)
45	SANITARY SEWER PLAN AND PROFILE (R.O.W. ONLY)
46	SANITARY SEWER PLAN AND PROFILE (R.O.W. ONLY)
47	OLD GUILFORD ROAD REALIGNMENT (R.O.W. ONLY)
48	SANITARY SEWER/WATER PLAN AND SANITARY SEWER PROFILE (R.O.W. ONLY)
49	SANITARY SEWER/WATER PLAN AND SANITARY SEWER PROFILE (R.O.W. ONLY)
50	WATER MAIN PLAN (R.O.W. ONLY)
51	SANITARY SEWER/WATER PLAN AND SANITARY SEWER PROFILE (R.O.W. ONLY)
52	SANITARY SEWER/WATER PLAN AND SANITARY SEWER PROFILE (R.O.W. ONLY)
53	SANITARY SEWER/WATER PLAN AND SANITARY SEWER PROFILE (R.O.W. ONLY)
54	SANITARY SEWER/WATER PLAN AND SANITARY SEWER PROFILE (R.O.W. ONLY)
55	SANITARY SEWER/WATER PLAN AND SANITARY SEWER PROFILE (R.O.W. ONLY)

STANDARDS

E-10	TRAFFIC SIGNS – TYPICAL MINOR MAINTENANCE OPERATION – APPROACH SIGNS (8-8-95)
E-10A	TRAFFIC SIGNS – TYPICAL MOVING MAINTENANCE OPERATION – APPROACH SIGNS (8-8-95)
E-100	CONSTRUCTION APPROACH SIGNS (8-8-95)
E-101	CONSTRUCTION SIGN DETAILS (8-8-95)
E-102	CONSTRUCTION SIGN DETAILS (8-8-95)
E-102A	CONSTRUCTION SIGN DETAILS (8-8-95)
E-103	MAINLINE TRAFFIC CONTROL DIVIDED HIGHWAY – ONE LANE CLOSED (8-8-95)
E-106	TRAFFIC CONTROL – MISCELLANEOUS DETAILS (8-8-95)
E-107	DELINEATION, BARRICADES AND DETOURS FOR CONSTRUCTION AREAS (8-8-95)
E-107A	BREAKAWAY BARRICADE DETAILS (8-8-95)
E-108	CONSTRUCTION ZONE LONGITUDINAL DROP OFFS (8-18-95)
E-110	MAJOR MAINTENANCE OPERATION – LANE CLOSURE (8-8-95)
G-1	STEEL BEAM GUARD RAIL – HEAVY DUTY STEEL BEAM GUARD RAIL – TWISTED END TERMINAL – ANCHOR FOR STEEL BEAM RAIL (6-1-94)
G-1D	STEEL BEAM GUARD RAIL – HEAVY DUTY STEEL BEAM GUARD RAIL – STEEL BEAM MEDIAN BARRIER – ANCHOR FOR STEEL BEAM RAIL (6-1-94)
G-4	PLANK RAIL – GUIDE POSTS – WOOD MARKER POSTS – STEEL MARKER POSTS (6-1-94)
G-15	BREAKAWAY CABLE TERMINAL WITH STEEL POSTS (6-1-94)
G-18	PRECAST CONCRETE TEMPORARY TRAFFIC BARRIER (6-1-94)
J-1	BOUNDARY MARKERS (6-1-94)
J-3	MAILBOX SUPPORT DETAIL (SINGLE AND MULTIPLE SUPPORT) (8-7-95)
T-1	TEMPORARY EROSION CONTROL DETAILS (6-1-94)
T-2	TEMPORARY EROSION CONTROL DETAILS (6-1-94)

LEGEND

PROPOSED

- GRAVITY SEWER
- FORCE MAIN
- WATER MAIN
- WATER SERVICE
- WETLANDS CROSSING
- TRENCH DRAIN
- MANHOLE
- CATCH BASIN
- THRUST BLOCK ◀ TB
- CURB STOP • CS
- CAP
- FIRE HYDRANT
- GATE VALVE
- FORCE MAIN CLEANOUT
- CONSTRUCTION EASEMENT
- PERMANENT EASEMENT

EXISTING

- SOIL BORING ◆ SB-1
- LEDGE
- CATCH BASIN
- COUNTY LINE
- TOWN LINE
- LIMITS OF ACCESS
- POINT OF ACCESS X
- FENCE LINE
- STONE WALL
- RETAINING WALL
- TRAVELED WAY
- GRAVEL ROAD/DRIVE
- GUARD RAIL
- RAILROAD
- SURVEY LINE
- CULVERT
- SIGN S
- UTILITY POLE W/GUY
- LIGHT POLE
- TREES
- TREELINE
- CONTROL OF ACCESS
- PROPERTY LINE
- R.O.W. TAKING LINE
- SLOPE RIGHTS SR
- TOP OF CUT
- TOE OF SLOPE
- GROUND CONTROL POINT 171.42
- BROOK/STREAM
- WATER WELL W
- MAILBOX MB
- IRON PIN IP

GENERAL NOTES

1. OPEN TRENCH METHOD IS NOT ACCEPTABLE WHERE WATER MAIN CROSSES INTERSTATE I-91.
2. ALL ELEVATIONS ARE IN METERS AND PIPE STATIONING IS IN KILOMETERS.
3. PLANIMETRIC AND TOPOGRAPHIC SURVEY PROVIDED BY EASTERN TOPOGRAPHICS, INC. THROUGH AERIAL PHOTOGRAMMETRY. GROUND CONTROL SURVEY AND ADDITIONAL FIELD SURVEY PROVIDED BY R.F. LUNNA ASSOCIATES, P.C.
4. THE HORIZONTAL ALIGNMENTS FOR THE WATER AND SEWER MAINS HAVE BEEN SURVEYED IN THE FIELD FOR FINAL DESIGN. SOME DISCREPANCY MAY APPEAR BETWEEN THE EXISTING GRADE ELEVATIONS AS INDICATED ON THE PROFILES AND THE TOPOGRAPHIC INFORMATION AS SHOWN ON THE PLAN VIEW. IN THE EVENT OF A DISCREPANCY THE PROFILE ELEVATIONS SHALL GOVERN.
5. ALL EXISTING RIGHTS-OF-WAY AND EASEMENT INFORMATION PROVIDED BY TOWN OF BRATTLEBORO AND VERMONT AGENCY OF TRANSPORTATION.
6. ALL SOIL BORING/LEDGE SOUNDING INFORMATION PERFORMED AND PROVIDED BY VERMONT AGENCY OF TRANSPORTATION EXCEPT WE-37 THROUGH WE-40 PERFORMED BY M & W SOILS ENGINEERING.
7. WHERE WATER MAIN AND SEWER ARE LOCATED CLOSER THAN 3 m, THE SEWER SHALL BE PRESSURE TESTED AT 2.40 kPa IN ACCORDANCE WITH WATER MAIN TESTING SPECIFICATIONS.
8. CONTRACTOR TO REFER TO STATE OF VERMONT AGENCY OF TRANSPORTATION STANDARD SPECIFICATIONS FOR CONSTRUCTION, 1995, AND SPECIAL PROVISIONS SPECIFIC TO THIS PROJECT FOR ADDITIONAL INFORMATION.
9. DRILLING AND BLASTING OF LEDGE ROCK OR OTHER UNYIELDING FOUNDATION MATERIAL ALONG OLD GUILFORD ROAD IS NOT ACCEPTABLE. ROCK TRENCHER OR OTHER APPROVED MECHANICAL METHOD SHALL BE USED.
10. RIGHT-OF-WAY PLANS, SHEETS 43-55, ARE PROVIDED BY VAOT AND ARE FOR RIGHT-OF WAY INFORMATION ONLY.
11. UPON COMPLETION OF THE WATER, SEWER AND FORCE MAIN STAKE-OUT, STA ~~T+950~~ TO STA ~~3+160~~, AND BEFORE CLEARING, CONTRACTOR TO CONTACT VAOT FOR LANDSCAPE ARCHITECT TO IDENTIFY AND FLAG TREES TO REMAIN WITHIN CONSTRUCTION EASEMENT.

VAOT Metric

NO.	DATE	REVISIONS	DRWN	CHKD
5	9/30/98	NO AS-BUILT INFORMATION ADDED	DSM	KAS
4	12/26/96	CONTRACT PLANS	DSM	MPY
3	11/11/96	FINAL REVIEW REVISIONS	DSM	MPY
2	6/4/96	REVISIONS PER REVIEW COMMENTS	DSM	MPY
1	4/8/96	REVISIONS PER REVIEW COMMENTS	DSM	MPY

TIMOTHY D. SMITH & ASSOCIATES, PC ARCHITECTS
OLD RAILROAD STATION, NORTH BENNINGTON, VERMONT 05257
802-442-6184 FAX 802-442-5241

WRIGHT ENGINEERING, LTD. CIVIL ENGINEERS
128 MERCHANTS ROW – P.O. BOX 176, RUTLAND, VERMONT 05702-0176
802-775-2511 FAX 802-775-8915

STATE OF VERMONT KEVIN SMITH 9/17/98 REG. No. 5862 REGISTERED PROFESSIONAL ENGINEER

PROJECT NO.IM 091-1 (29)
WATER & SEWER EXTENSION PROJECT
TOWN OF GUILFORD
TOWN OF BRATTLEBORO

SHEET TITLE: GENERAL INFORMATION

DSGN BY: JAC
DRWN BY: DSM
CHKD BY: JAC
CHKD BY: MPY

STATE OF VERMONT
AGENCY OF TRANSPORTATION
SOUTHEAST VERMONT WELCOME CENTER
GUILFORD, VERMONT

DATE: 1-2-96 SHEET NO. 2 OF 55 SHEETS

C:\ACAD12\9501\9501A38 Thu Oct 8 13:13:54 1998

SUMMARY OF ESTIMATED QUANTITIES

ITEM NO.	ITEM	TOTAL QUANTITY	FEDERAL PARTICIPATING UTILITY ITEMS	FEDERAL NON-PARTICIPATING UTILITY ITEMS	UNIT
201.10	CLEARING AND GRUBBING (INCLUDING INDIVIDUAL TREES & STUMPS)	1	1		LS
203.15	COMMON EXCAVATION	2836.44	2836.44		CUBIC METER
203.20	MUCK EXCAVATION	0	0		CUBIC METER
203.28	EXCAVATION OF SURFACES AND PAVEMENT	375.3	375.3		CUBIC METER
203.30	EARTH BORROW	474.83	474.83		CUBIC METER
203.31	SAND BORROW	2371.55	2124.08	247.47	CUBIC METER
203.40	FINE GRADING, SUBGRADE	11198.0	11198.0		SQUARE METER
204.20	TRENCH EXCAVATION OF EARTH	14004.72	13199.17	805.55	CUBIC METER
204.21	TRENCH EXCAVATION OF ROCK	3483.47	2947.7	535.77	CUBIC METER
204.25	STRUCTURE EXCAVATION (CHANNEL EXCAVATION OF EARTH)	452.64	452.64		CUBIC METER
204.30	GRANULAR BACKFILL FOR STRUCTURES	164.7	164.7		CUBIC METER
204.40	COFFERDAM	1	1		LS
210.10	COLD PLANING - BITUMINOUS PAVEMENT	0	0		SQUARE METER
212.20	SCARIFYING PAVEMENT	0	0		SQUARE METER
301.26	SUBBASE OF CRUSHED GRAVEL (FINE GRADE)	4310.85	4310.85		CUBIC METER
301.35	SUBBASE OF DENSE GRADED CRUSHED STONE	419.4	419.4		CUBIC METER
401.10	AGGREGATE SURFACE COURSE	21.0	21.0		CUBIC METER
404.65	EMULSIFIED ASPHALT (ESTIMATED)	452.0	452.0		kg
406.25	BITUMINOUS CONCRETE PAVEMENT	2613.78	2613.78		TON
501.25	CONCRETE, CLASS B (ESTIMATED)	15.56	15.56		CUBIC METER
505.36	TEMPORARY STEEL SHEET PILING	0	0		SQUARE METER
540.10	PRECAST CONCRETE BOX CULVERT (1.37 m H x 1.83 m W x 13.41 m L)	1	1		LS
601.0016	450 mm CSP, 2.1 mm (67 mm x 13 mm)	103.70	103.70		m
601.5015	450 mm CSP, ELBOW, (WYE), 1.6 mm (68 mm x 13 mm)	2	2		EA
601.99	RELAYING PIPE CULVERTS	54.15	54.15		m
604.20	PRECAST REINFORCED CONCRETE CATCH BASIN W/CAST IRON GRATE	1	1		EA
604.21	PRECAST REINFORCED CONCRETE MANHOLE W/CAST IRON COVER	35	34	1	EA
604.21 (MOD.)	PRECAST REINFORCED CONCRETE MANHOLE W/CAST IRON COVER (NO BOTTOM)	2	2		EA
604.43	CORE AND BOOT EXISTING MANHOLE	1	1		EA
604.55	WATER-TIGHT DUCTILE IRON FRAME AND COVER	4	4		EA
605.10	GALVANIZED PERFORATED CORRUGATED STEEL PIPE (150 mm)	31.20	31.20		m
607.10	ROADWAY PATROL MAINTENANCE	23.50	23.50		HR
608.10	BULLDOZER RENTAL, TYPE I, NABI	0	0		HR
608.25	ALL-PURPOSE EXCAVATOR RENTAL, TYPE I, NABI	23.10	23.10		HR
608.30	POWER BROOM RENTAL, NABI	2	2		HR
608.37	TRUCK RENTAL, NABI	19.50	19.50		HR
609.10	DUST CONTROL WITH WATER	14.50	14.50		CUBIC METER
609.15	DUST AND ICE CONTROL WITH CALCIUM CHLORIDE	1.68	1.68		TON
612.10	GABION RETAINING WALL	151.43	151.43		CUBIC METER
613.11	STONE FILL, TYPE II	145.25	145.25		CUBIC METER
613.12	STONE FILL, TYPE III	215.54	215.54		CUBIC METER
613.13	STONE FILL, TYPE IV	37.90	37.90		CUBIC METER
617.10	RELOCATE MAILBOX, SINGLE SUPPORT	12.0	12.0		EA
617.12	RELOCATE MAILBOX, MULTIPLE SUPPORT	0	0		EA
619.15	WOOD MARKER POSTS	12	12		EA
620.50	REMOVING AND RESETING FENCE	102.50	102.50		m
621.20	STEEL BEAM GUARDRAIL	479.74	479.74		m
621.45	CONCRETE MEDIAN BARRIER	0	0		m
621.50	BREAKAWAY CABLE TERMINAL	0	0		EA
621.60	ANCHOR FOR STEEL BEAM RAIL	10	10		EA
621.75	REMOVING AND RESETTING GUARDRAIL	9.10	9.10		m
621.80	REMOVAL AND DISPOSAL OF GUARDRAIL	169.60	169.60		m
622.10	INSULATION BOARD	16.490	16.415	0.075	CUBIC METER
628.28	DUCTILE IRON PIPE, CEMENT LINED (100 mm CL 52)	18.0	0	18	m
628.28	DUCTILE IRON PIPE, CEMENT LINED (200 mm CL 52)	2300.77	1956.77	344.0	m
628.28	DUCTILE IRON PIPE, CEMENT LINED (300 mm CL 52)	421.16	421.16		m
628.28 (MOD.)	DUCTILE IRON PIPE, CEMENT LINED (150 mm BALL & SOCKET)	24.36	24.36		m
628.28 (MOD.)	DUCTILE IRON PIPE, CEMENT LINED (200 mm BALL & SOCKET)	24.36	24.36		m
628.35	PVC SEWER PIPE (100 mm SDR 35)	96.31	0	96.31	m
628.35	PVC SEWER PIPE (150 mm SDR 35)	74.0	39.68	34.32	m
628.35	PVC SEWER PIPE (200 mm SDR 35)	914.18	910.18	4.0	m
628.35	PVC SEWER PIPE (250 mm SDR 35)	682.56	682.56	0	m
628.35 (MOD.)	PVC SEWER PIPE (200 mm AWWA C900)	426.15	426.15		m
628.46	SEWAGE FORCE MAIN CLEANOUTS	8	8		EA
628.48	TRENCH DAMS	20	20		EA
629.23	SEAMLESS COPPER WATER TUBE (19 mm TYPE K)	161.75	0	161.75	m

SUMMARY OF ESTIMATED QUANTITIES

ITEM NO.	ITEM	TOTAL QUANTITY	FEDERAL PARTICIPATING UTILITY ITEMS	FEDERAL NON-PARTICIPATING UTILITY ITEMS	UNIT
629.23	SEAMLESS COPPER WATER TUBE (25 mm TYPE K)	95.95	41.15	54.80	m
629.25	EXTENSION SERVICE BOX AND CURB STOP	21	1	20	EA
629.27	GATE VALVE W/VALVE BOX (100 mm AWWA)	1	0	1	EA
629.27	GATE VALVE W/VALVE BOX (150 mm AWWA)	14	11	3	EA
629.27	GATE VALVE W/VALVE BOX (200 mm AWWA)	8	5	3	EA
629.27	GATE VALVE W/VALVE BOX (300 mm AWWA)	5	5		EA
629.28	HYDRANT	12	9	3	EA
629.32 (MOD.)	HDPE HEAT FUSED PIPE (150 mm CL 200)	1472.67	1472.67		m
629.39	CORPORATION STOP	21	1	20	EA
629.44	PIPE INSULATION	8	8		METER
629.54	CRUSHED STONE BEDDING	199.02	198.02	1.0	TON
630.10	UNIFORMED TRAFFIC OFFICERS	71.50	71.50		HR
630.15	FLAGGERS	934.50	934.50		HR
631.10	FIELD OFFICE, ENGINEER'S	1	1		LS
631.16	TESTING EQUIPMENT, CONCRETE	1	1		LS
631.17	TESTING EQUIPMENT, BITUMINOUS	1	1		LS
631.25	FIELD OFFICE TELEPHONE, NABI	1	1		LS
634.10	EMPLOYEE TRAINEESHIP	620	620		HOUR
635.10	MOBILIZATION	1	1		LS
636.00	WASTEWATER PUMP STATION	1	1		EA
641.10	TRAFFIC CONTROL	1	1		LS
643.20	JACKING AND BORING WELDED STEEL PIPE (8 mm THK)	47.50	47.50		m
646.40	DURABLE 100 mm WHITE LINE	2768.0	2768.0		m
646.41	DURABLE 100 mm YELLOW LINE	2761.0	2761.0		m
649.31	GEOTEXTILE UNDER STONE FILL	2092.94	2092.94		SQUARE METER
649.51	GEOTEXTILE FOR SILT FENCE	555.47	555.47		SQUARE METER
651.15	SEED	167.62	167.62		kg
651.17	SEED - WINTER RYE	0	0		kg
651.18	FERTILIZER	139	139		kg
651.20	AGRICULTURAL LIMESTONE	0	0		TON
651.25	HAY MULCH	9.191	9.191		TON
651.26	HAY BALES FOR EROSION CONTROL	189	189		EA
651.30	SODDING	5490.0	5490.0		SQUARE METER
651.35	TOPSOIL	369.0	369.0		CUBIC METER
651.40	GRUBBING MATERIAL	40	40		SQUARE METER
654.10	EROSION MATTING	5508.10	5508.10		SQUARE METER

DETAILED SUMMARY OF QUANTITIES

ITEM NO.	ITEM	TOTAL QUANTITY	PARTICIPATING UTILITY ITEMS	NON-PARTICIPATING UTILITY ITEMS	UNIT
204.20	TRENCH EXCAVATION OF EARTH (0-1.5 M)	~~11,500~~	11,040	460	CUBIC METER
204.20	TRENCH EXCAVATION OF EARTH (BELOW 1.5 m) [150% OF ACTUAL]	11,000	10,370	630	CUBIC METER
204.20	TRENCH EXCAVATION OF EARTH (AROUND MANHOLES 0-1.5 m)	300	300		CUBIC METER
204.20	TRENCH EXCAVATION OF EARTH (AROUND MH'S BELOW 1.5 m)	400	400		CUBIC METER
301.26	SUBBASE OF CRUSHED GRAVEL (FINE GRADE) FOR ROADWAY	5,500	5,500		CUBIC METER
301.26	SUBBASE OF CRUSHED GRAVEL (FINE GRADE) FOR SHOULDERS	300	300		CUBIC METER
406.25	BITUMINOUS CONCRETE PAVEMENT, TYPE I	1,300	1,300		TON
406.25	BITUMINOUS CONCRETE PAVEMENT, TYPE III	700	700		TON

* THESE ITEMS HAVE BEEN ROUNDED

RECORD DRAWING

SHOWN PICTORALLY
MAY NOT BE TO SCALE

THESE AS-BUILT OR RECORD DRAWINGS HAVE BEEN PREPARED, IN PART, ON THE BASIS OF INFORMATION COMPILED AND FURNISHED BY OTHERS. THE ENGINEER WILL NOT BE RESPONSIBLE FOR ANY ERRORS OR OMISSIONS WHICH HAVE BEEN INCORPORATED INTO THIS DOCUMENT AS A RESULT OF INFORMATION BY OTHERS.

VAOT Metric

NO.	DATE	REVISIONS	DRWN	CHKD
5	9/30/98	AS-BUILT INFORMATION ADDED	DSM	KAS
4	12/26/96	CONTRACT PLANS	DSM	MPY
3	11/11/96	FINAL REVIEW REVISIONS	DSM	MPY
2	6/4/96	REVISIONS PER REVIEW COMMENTS	DSM	MPY
1	4/8/96	REVISIONS PER REVIEW COMMENTS	DSM	MPY

TIMOTHY D. SMITH & ASSOCIATES, PC ARCHITECTS
OLD RAILROAD STATION
802-442-8184
NORTH BENNINGTON, VERMONT 05257
FAX 802-442-5241

WRIGHT ENGINEERING, LTD. CIVIL ENGINEERS
128 MERCHANTS ROW - P.O. BOX 176
802-775-2511
RUTLAND, VERMONT 05702-0176
FAX 802-775-8915

STATE OF VERMONT * KEVIN Mac SMITH 98 * REGISTERED PROFESSIONAL ENGINEER

PROJECT NO.IM 091-1 (29)

WATER & SEWER EXTENSION PROJECT

TOWN OF GUILFORD
TOWN OF BRATTLEBORO

SHEET TITLE: QUANTITY SHEET

DSGN BY: JAC
DRWN BY: DSM
CHKD BY: JAC
CHKD BY: MPY

STATE OF VERMONT
AGENCY OF TRANSPORTATION

SOUTHEAST VERMONT WELCOME CENTER
GUILFORD, VERMONT

DATE: 1-2-96

SHEET NO. 3 OF 55 SHEETS

C:\ACAD12\G501\G5013AS8 Thu Oct 8 13:15:58 1998

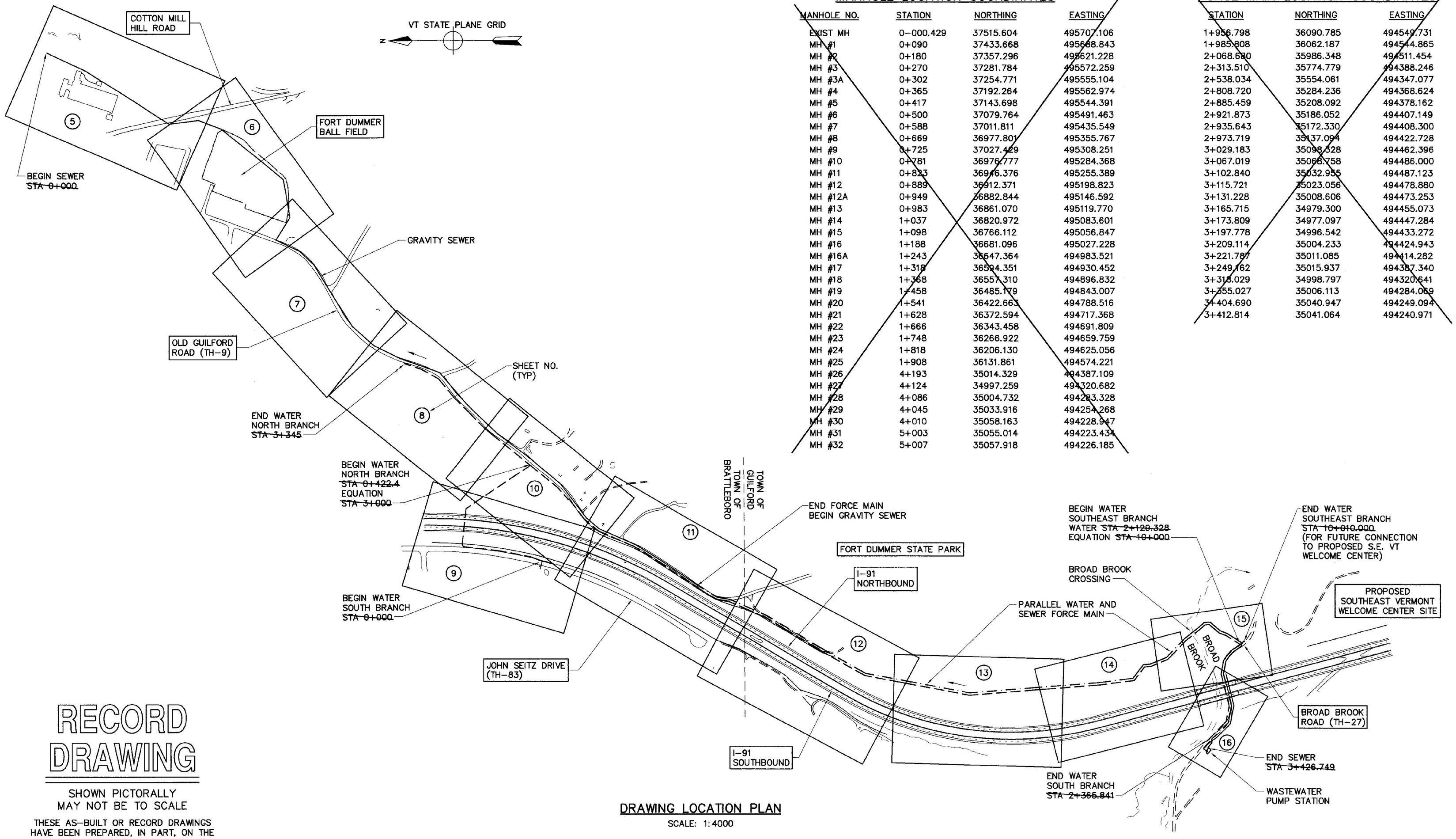

MANHOLE LOCATION COORDINATES

MANHOLE NO.	STATION	NORTHING	EASTING
EXIST MH	0-000.429	37515.604	495707.106
MH #1	0+090	37433.668	495668.843
MH #2	0+180	37357.296	495621.228
MH #3	0+270	37281.784	495572.259
MH #3A	0+302	37254.771	495555.104
MH #4	0+365	37192.264	495562.974
MH #5	0+417	37143.698	495544.391
MH #6	0+500	37079.764	495491.463
MH #7	0+588	37011.811	495435.549
MH #8	0+669	36977.801	495355.767
MH #9	0+725	37027.429	495308.251
MH #10	0+781	36976.777	495284.368
MH #11	0+823	36946.376	495255.389
MH #12	0+889	36912.371	495198.823
MH #12A	0+949	36882.844	495146.592
MH #13	0+983	36861.070	495119.770
MH #14	1+037	36820.972	495083.601
MH #15	1+098	36766.112	495056.847
MH #16	1+188	36681.096	495027.228
MH #16A	1+243	36647.364	494983.521
MH #17	1+318	36594.351	494930.452
MH #18	1+368	36557.310	494896.832
MH #19	1+458	36485.179	494843.007
MH #20	1+541	36422.663	494788.516
MH #21	1+628	36372.594	494717.368
MH #22	1+666	36343.458	494691.809
MH #23	1+748	36266.922	494659.759
MH #24	1+818	36206.130	494625.056
MH #25	1+908	36131.861	494574.221
MH #26	4+193	35014.329	494387.109
MH #27	4+124	34997.259	494320.682
MH #28	4+086	35004.732	494283.328
MH #29	4+045	35033.916	494254.268
MH #30	4+010	35058.163	494228.947
MH #31	5+003	35055.014	494223.434
MH #32	5+007	35057.918	494226.185

FORCE MAIN LOCATION COORDINATES

STATION	NORTHING	EASTING
1+956.798	36090.785	494549.731
1+985.808	36062.187	494544.865
2+068.680	35986.348	494511.454
2+313.510	35774.779	494388.246
2+538.034	35554.061	494347.077
2+808.720	35284.236	494368.624
2+885.459	35208.092	494378.162
2+921.873	35186.052	494407.149
2+935.643	35172.330	494408.300
2+973.719	35137.094	494422.728
3+029.183	35098.528	494462.396
3+067.019	35068.758	494486.000
3+102.840	35032.955	494487.123
3+115.721	35023.056	494478.880
3+131.228	35008.606	494473.253
3+165.715	34979.300	494455.073
3+173.809	34977.097	494447.284
3+197.778	34996.542	494433.272
3+209.114	35004.233	494424.943
3+221.787	35011.085	494414.282
3+249.162	35015.937	494387.340
3+318.029	34998.797	494320.641
3+355.027	35006.113	494284.069
3+404.690	35040.947	494249.094
3+412.814	35041.064	494240.971

RECORD DRAWING

SHOWN PICTORALLY
MAY NOT BE TO SCALE

THESE AS-BUILT OR RECORD DRAWINGS HAVE BEEN PREPARED, IN PART, ON THE BASIS OF INFORMATION COMPILED AND FURNISHED BY OTHERS. THE ENGINEER WILL NOT BE RESPONSIBLE FOR ANY ERRORS OR OMISSIONS WHICH HAVE BEEN INCORPORATED INTO THIS DOCUMENT AS A RESULT OF INFORMATION BY OTHERS.

DRAWING LOCATION PLAN

SCALE: 1:4000

0 50 100 200 300 400

VAOT Metric

NO.	DATE	REVISIONS	DRWN	CHKD
5	9/30/98	NO AS-BUILT INFORMATION ADDED	DSM	KAS
4	12/26/96	CONTRACT PLANS	DSM	MPY
3	11/11/96	FINAL REVIEW REVISIONS	DSM	MPY
2	6/4/96	REVISIONS PER REVIEW COMMENTS	DSM	MPY
1	4/8/96	REVISIONS PER REVIEW COMMENTS	DSM	MPY

TIMOTHY D. SMITH & ASSOCIATES, PC ARCHITECTS
OLD RAILROAD STATION, NORTH BENNINGTON, VERMONT 05257
802-442-8184 FAX 802-442-5241

WRIGHT ENGINEERING, LTD. CIVIL ENGINEERS
128 MERCHANTS ROW - P.O. BOX 176, RUTLAND, VERMONT 05702-0176
802-775-2511 FAX 802-775-8915

PROJECT NO.IM 091-1 (29)
WATER & SEWER EXTENSION PROJECT
TOWN OF GUILFORD
TOWN OF BRATTLEBORO

SHEET TITLE: DRAWING LOCATION PLAN

DSGN BY: JAC
DRWN BY: DSM
CHKD BY: JAC
CHKD BY: MPY

STATE OF VERMONT
AGENCY OF TRANSPORTATION
SOUTHEAST VERMONT WELCOME CENTER
GUILFORD, VERMONT

DATE: 1-2-96 SHEET NO. 4 OF 55 SHEETS

C:\ACAD12\350\1350144SB Thu Oct 8 13:19:10 1998

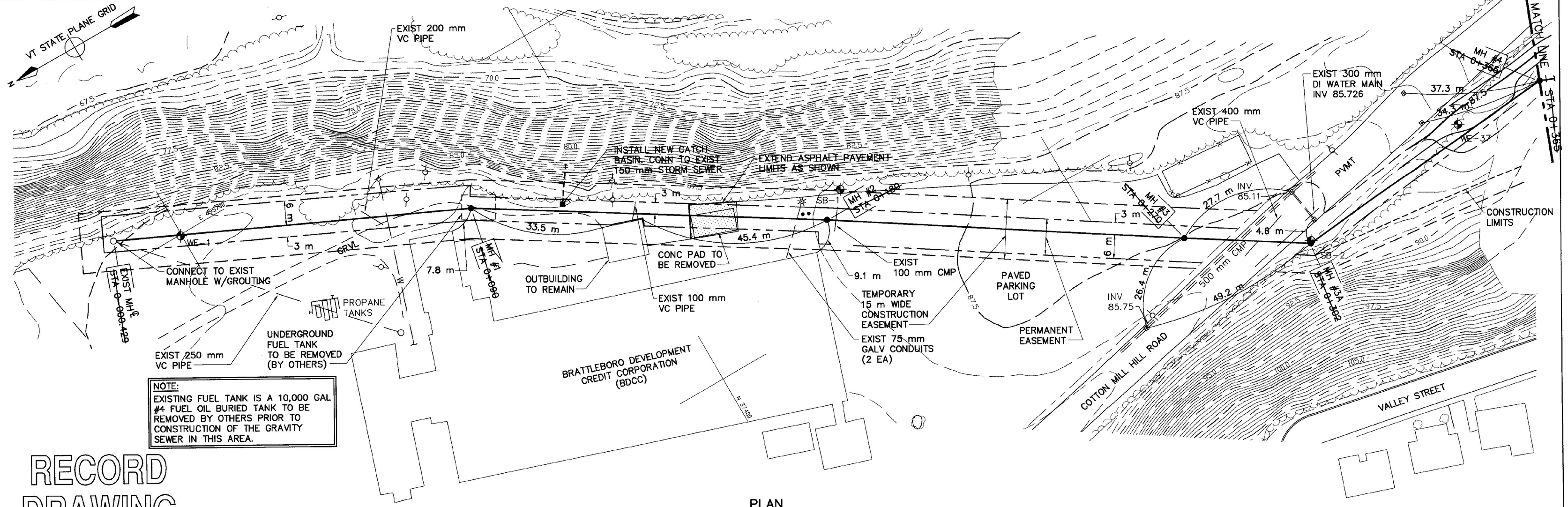

PLAN
SCALE: 1:500

RECORD DRAWING

SHOWN PICTORALLY
MAY NOT BE TO SCALE

THESE AS-BUILT OR RECORD DRAWINGS HAVE BEEN PREPARED, IN PART, ON THE BASIS OF INFORMATION COMPILED AND FURNISHED BY OTHERS. THE ENGINEER WILL NOT BE RESPONSIBLE FOR ANY ERRORS OR OMISSIONS WHICH HAVE BEEN INCORPORATED INTO THIS DOCUMENT AS A RESULT OF INFORMATION BY OTHERS.

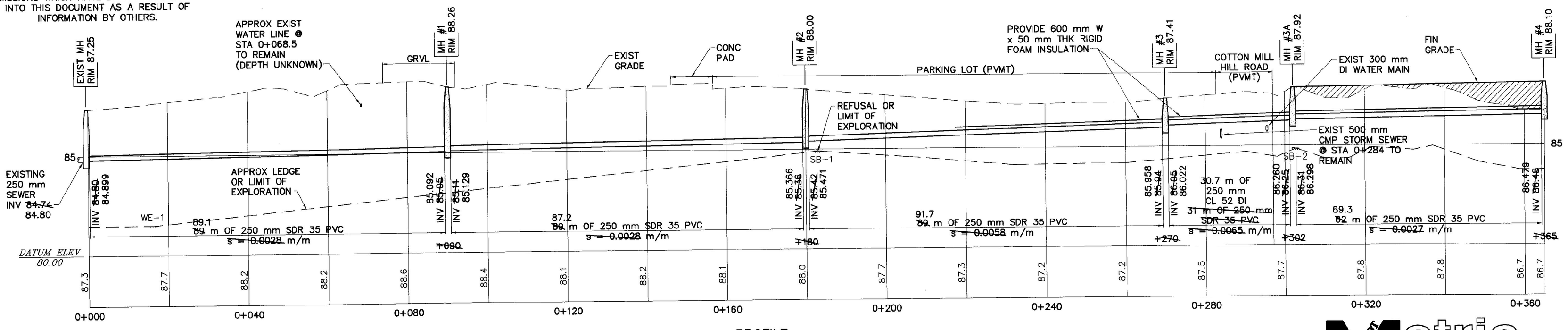

PROFILE
SCALE: 1:500 H
1:100 V

Metric

NO.	DATE	REVISIONS	DRWN	CHKD
5	9/30/98	AS-BUILT INFORMATION ADDED	DSM	KAS
4	12/26/96	CONTRACT PLANS	DSM	MPY
3	11/11/96	FINAL REVIEW REVISIONS	DSM	MPY
2	6/4/96	REVISIONS PER REVIEW COMMENTS	DSM	MPY
1	4/8/96	REVISIONS PER REVIEW COMMENTS	DSM	MPY

TIMOTHY D. SMITH & ASSOCIATES, PC ARCHITECTS
OLD RAILROAD STATION
802-442-8184
NORTH BENNINGTON, VERMONT 05257
FAX 802-442-5241
WRIGHT ENGINEERING, LTD. CIVIL ENGINEERS
128 MERCHANTS ROW - P.O. BOX 176
802-775-2511
RUTLAND, VERMONT 05702-0176
FAX 802-775-8915

PROJECT NO.IM 091-1 (29)
WATER & SEWER EXTENSION PROJECT
TOWN OF GUILFORD
TOWN OF BRATTLEBORO

SHEET TITLE: SANITARY SEWER PLAN AND PROFILE

DSGN BY: JAC
DRWN BY: DSM
CHKD BY: JAC
CHKD BY: MPY

STATE OF VERMONT
AGENCY OF TRANSPORTATION
SOUTHEAST VERMONT WELCOME CENTER
GUILFORD, VERMONT

DATE: 1-2-96
SHEET NO. 5 OF 55 SHEETS

C:\ACAD12\9501\95015ASB Thu Oct 8 13:20:59 1998

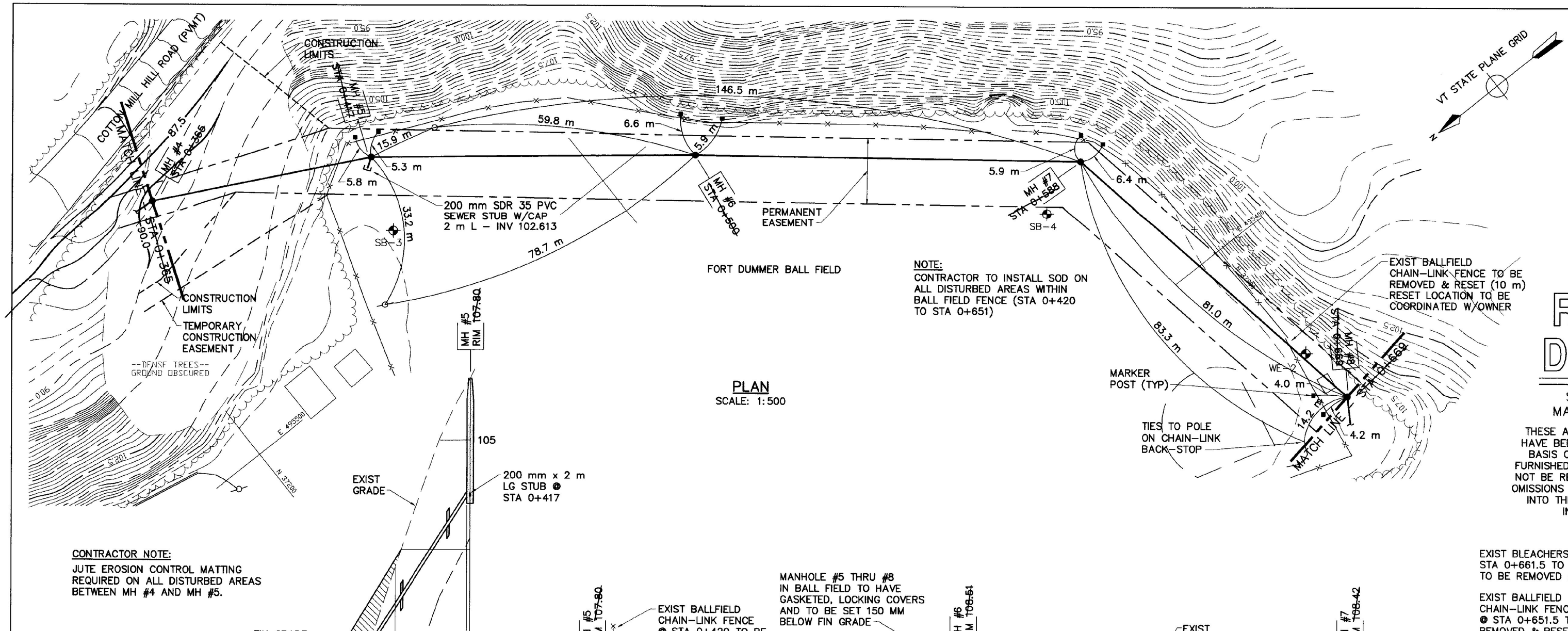

CONTRACTOR NOTE:
JUTE EROSION CONTROL MATTING REQUIRED ON ALL DISTURBED AREAS BETWEEN MH #4 AND MH #5.

NOTE:
CONTRACTOR TO INSTALL SOD ON ALL DISTURBED AREAS WITHIN BALL FIELD FENCE (STA 0+420 TO STA 0+651)

PLAN
SCALE: 1:500

PROFILE
SCALE: 1:500 H
1:100 V

PROFILE
SCALE: 1:500 H
1:100 V

RECORD DRAWING

SHOWN PICTORALLY
MAY NOT BE TO SCALE

THESE AS-BUILT OR RECORD DRAWINGS HAVE BEEN PREPARED, IN PART, ON THE BASIS OF INFORMATION COMPILED AND FURNISHED BY OTHERS. THE ENGINEER WILL NOT BE RESPONSIBLE FOR ANY ERRORS OR OMISSIONS WHICH HAVE BEEN INCORPORATED INTO THIS DOCUMENT AS A RESULT OF INFORMATION BY OTHERS.

VAOT Metric

NO.	DATE	REVISIONS	DRWN	CHKD
5	9/30/98	AS-BUILT INFORMATION ADDED	DSM	KAS
4	12/26/96	CONTRACT PLANS	DSM	MPY
3	11/11/96	FINAL REVIEW REVISIONS	DSM	MPY
2	6/4/96	REVISIONS PER REVIEW COMMENTS	DSM	MPY
1	4/8/96	REVISIONS PER REVIEW COMMENTS	DSM	MPY

TIMOTHY D. SMITH & ASSOCIATES, PC ARCHITECTS
OLD RAILROAD STATION, NORTH BENNINGTON, VERMONT 05257
802-442-8184, FAX 802-442-5241
WRIGHT ENGINEERING, LTD. CIVIL ENGINEERS
128 MERCHANTS ROW – P.O. BOX 176, RUTLAND, VERMONT 05702-0176
802-775-2511, FAX 802-775-8915

PROJECT NO.IM 091-1 (29)
WATER & SEWER EXTENSION PROJECT
TOWN OF GUILFORD
TOWN OF BRATTLEBORO

SHEET TITLE: SANITARY SEWER PLAN AND PROFILE

DSGN BY: JAC
DRWN BY: DSM
CHKD BY: JAC
CHKD BY: MPY

STATE OF VERMONT
AGENCY OF TRANSPORTATION
SOUTHEAST VERMONT WELCOME CENTER
GUILFORD, VERMONT

DATE: 1-2-96 SHEET NO. 6 OF 55 SHEETS

C:\ACAD12\SD01\SD01A5B Thu Oct 8 13:22:26 1998

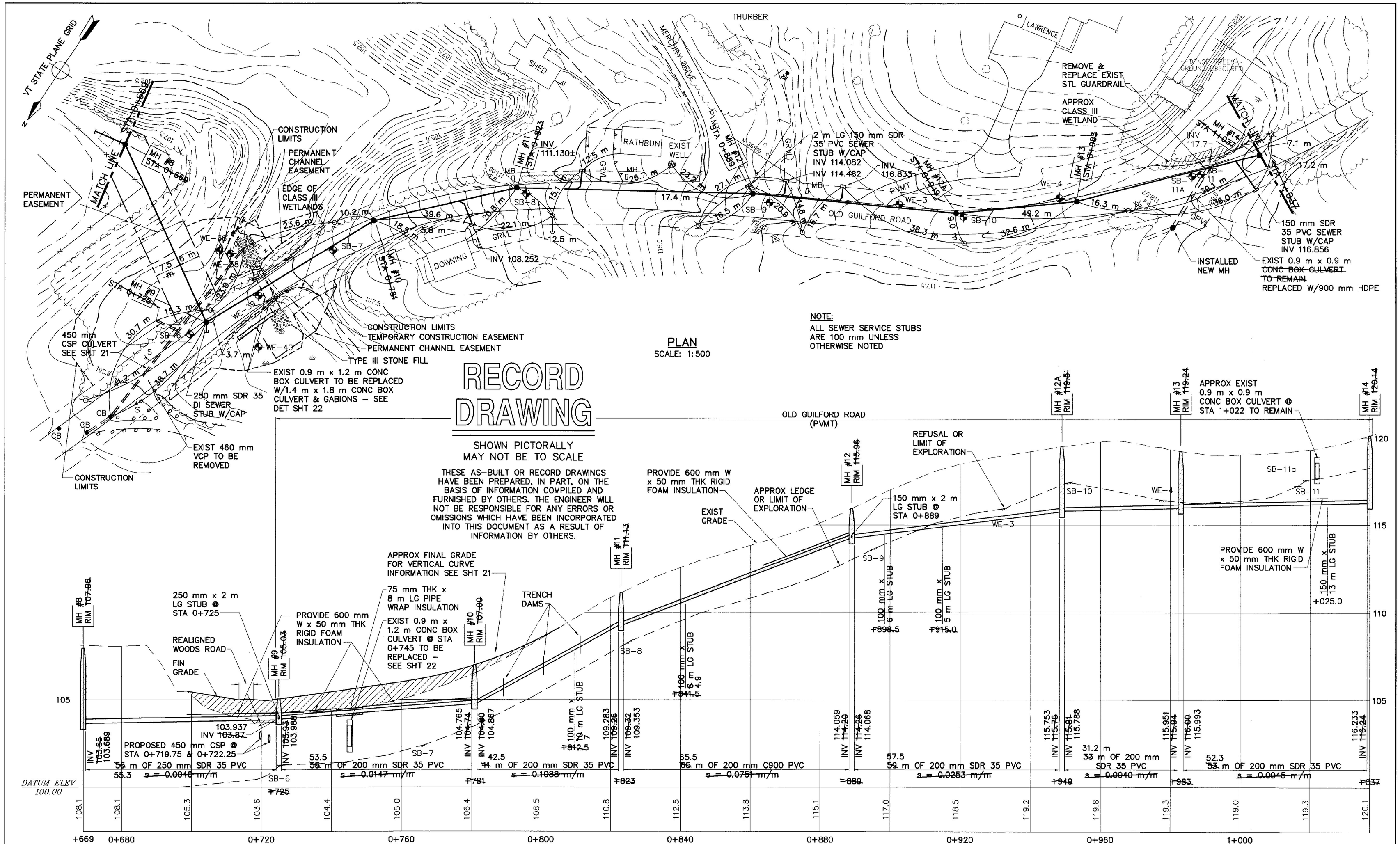

PLAN
SCALE: 1:500

NOTE:
ALL SEWER SERVICE STUBS ARE 100 mm UNLESS OTHERWISE NOTED

RECORD DRAWING

SHOWN PICTORALLY
MAY NOT BE TO SCALE

THESE AS-BUILT OR RECORD DRAWINGS HAVE BEEN PREPARED, IN PART, ON THE BASIS OF INFORMATION COMPILED AND FURNISHED BY OTHERS. THE ENGINEER WILL NOT BE RESPONSIBLE FOR ANY ERRORS OR OMISSIONS WHICH HAVE BEEN INCORPORATED INTO THIS DOCUMENT AS A RESULT OF INFORMATION BY OTHERS.

PROFILE
SCALE: 1:500 H
1:100 V

VAOT Metric

NO.	DATE	REVISIONS	DRWN	CHKD
5	9/30/98	AS-BUILT INFORMATION ADDED	DSM	KAS
4	12/26/96	CONTRACT PLANS	DSM	MPY
3	11/11/96	FINAL REVIEW REVISIONS	DSM	MPY
2	6/4/96	REVISIONS PER REVIEW COMMENTS	DSM	MPY
1	4/8/96	REVISIONS PER REVIEW COMMENTS	DSM	MPY

TIMOTHY D. SMITH & ASSOCIATES, PC ARCHITECTS
OLD RAILROAD STATION, NORTH BENNINGTON, VERMONT 05257
802-442-8184, FAX 802-442-5241
WRIGHT ENGINEERING, LTD. CIVIL ENGINEERS
128 MERCHANTS ROW – P.O. BOX 176, RUTLAND, VERMONT 05702-0176
802-775-2511, FAX 802-775-8915

STATE OF VERMONT KEVIN J. SMITH 2/30/98 No. 5504 REGISTERED PROFESSIONAL ENGINEER

PROJECT NO.IM 091-1 (29)
WATER & SEWER EXTENSION PROJECT
TOWN OF GUILFORD
TOWN OF BRATTLEBORO

SHEET TITLE: SANITARY SEWER PLAN AND PROFILE

DSGN BY: JAC
DRWN BY: DSM
CHKD BY: JAC
CHKD BY: MPY

STATE OF VERMONT
AGENCY OF TRANSPORTATION
SOUTHEAST VERMONT WELCOME CENTER
GUILFORD, VERMONT

DATE: 1-2-96
SHEET NO. 7 OF 55 SHEETS

C:\ACAD12\DS01\DS017ASB Thu Oct 8 13:25:49 1998

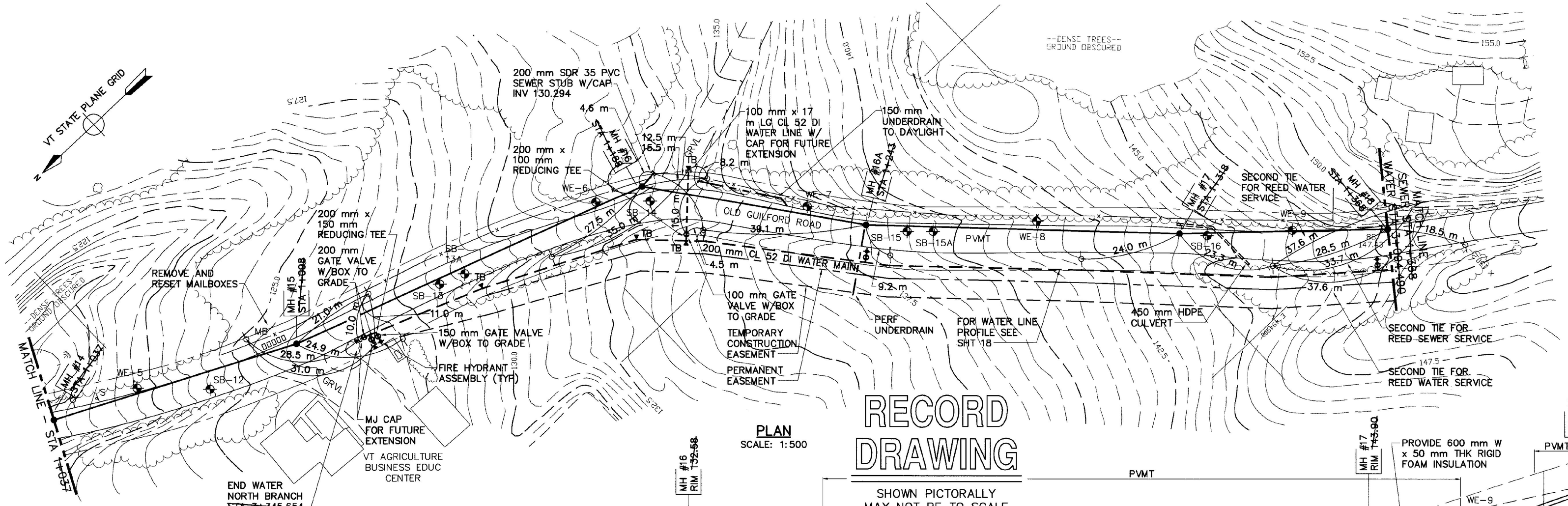

PLAN
SCALE: 1:500

RECORD DRAWING

SHOWN PICTORALLY
MAY NOT BE TO SCALE

THESE AS-BUILT OR RECORD DRAWINGS HAVE BEEN PREPARED, IN PART, ON THE BASIS OF INFORMATION COMPILED AND FURNISHED BY OTHERS. THE ENGINEER WILL NOT BE RESPONSIBLE FOR ANY ERRORS OR OMISSIONS WHICH HAVE BEEN INCORPORATED INTO THIS DOCUMENT AS A RESULT OF INFORMATION BY OTHERS.

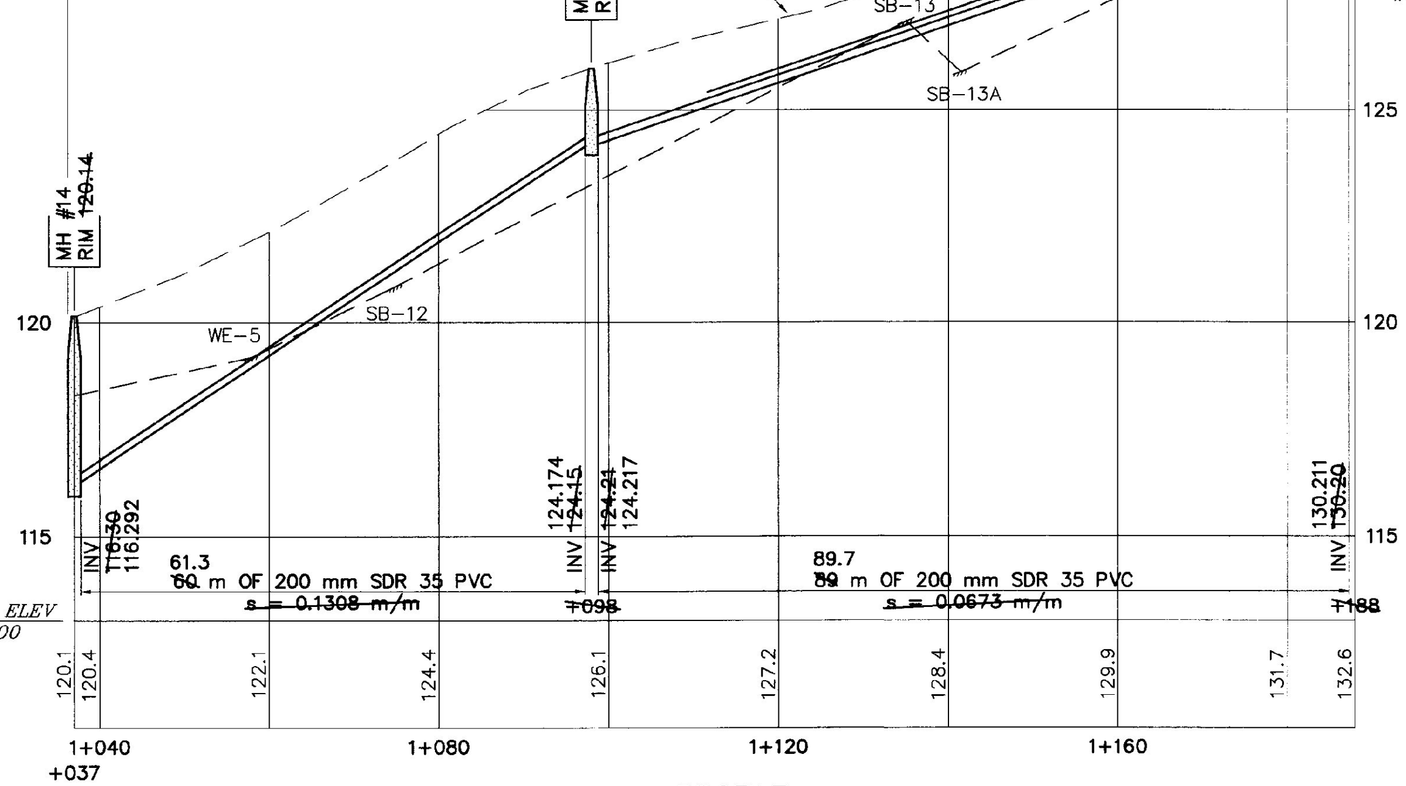

PROFILE
SCALE: 1:500 H
1:100 V

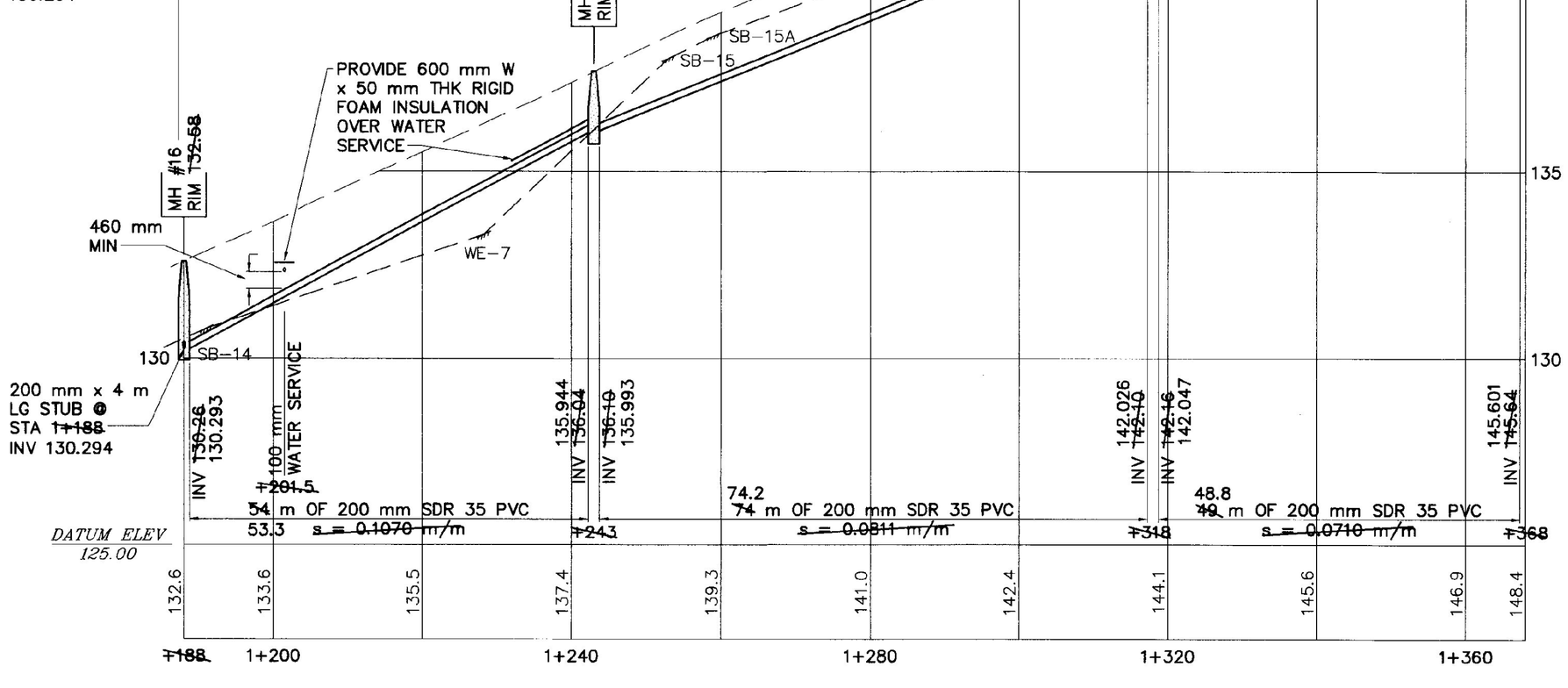

PROFILE
SCALE: 1:500 H
1:100 V

VAOT Metric

NO.	DATE	REVISIONS	DRWN	CHKD
5	9/30/98	AS-BUILT INFORMATION ADDED	DSM	KAS
4	12/26/96	CONTRACT PLANS	DSM	MPY
3	11/11/96	FINAL REVIEW REVISIONS	DSM	MPY
2	6/4/96	REVISIONS PER REVIEW COMMENTS	DSM	MPY
1	4/8/96	REVISIONS PER REVIEW COMMENTS	DSM	MPY

TIMOTHY D. SMITH & ASSOCIATES, PC ARCHITECTS
OLD RAILROAD STATION NORTH BENNINGTON, VERMONT 05257
802-442-8184 FAX 802-442-5241
WRIGHT ENGINEERING, LTD. CIVIL ENGINEERS
128 MERCHANTS ROW - P.O. BOX 176 RUTLAND, VERMONT 05702-0176
802-775-2511 FAX 802-775-8915

STATE OF VERMONT KEVIN L. SMITH No. 5864 REGISTERED PROFESSIONAL ENGINEER

PROJECT NO.IM 091-1 (29)
WATER & SEWER EXTENSION PROJECT
TOWN OF GUILFORD
TOWN OF BRATTLEBORO

SHEET TITLE: SANITARY SEWER/WATER PLAN AND SANITARY SEWER PROFILE

DSGN BY: JAC
DRWN BY: DSM
CHKD BY: JAC
CHKD BY: MPY

STATE OF VERMONT
AGENCY OF TRANSPORTATION
SOUTHEAST VERMONT WELCOME CENTER
GUILFORD, VERMONT

DATE: 1-2-96 SHEET NO. 8 OF 55 SHEETS

C:\ACAD12\35011\35018458 Thu Oct 8 13:27:59 1998

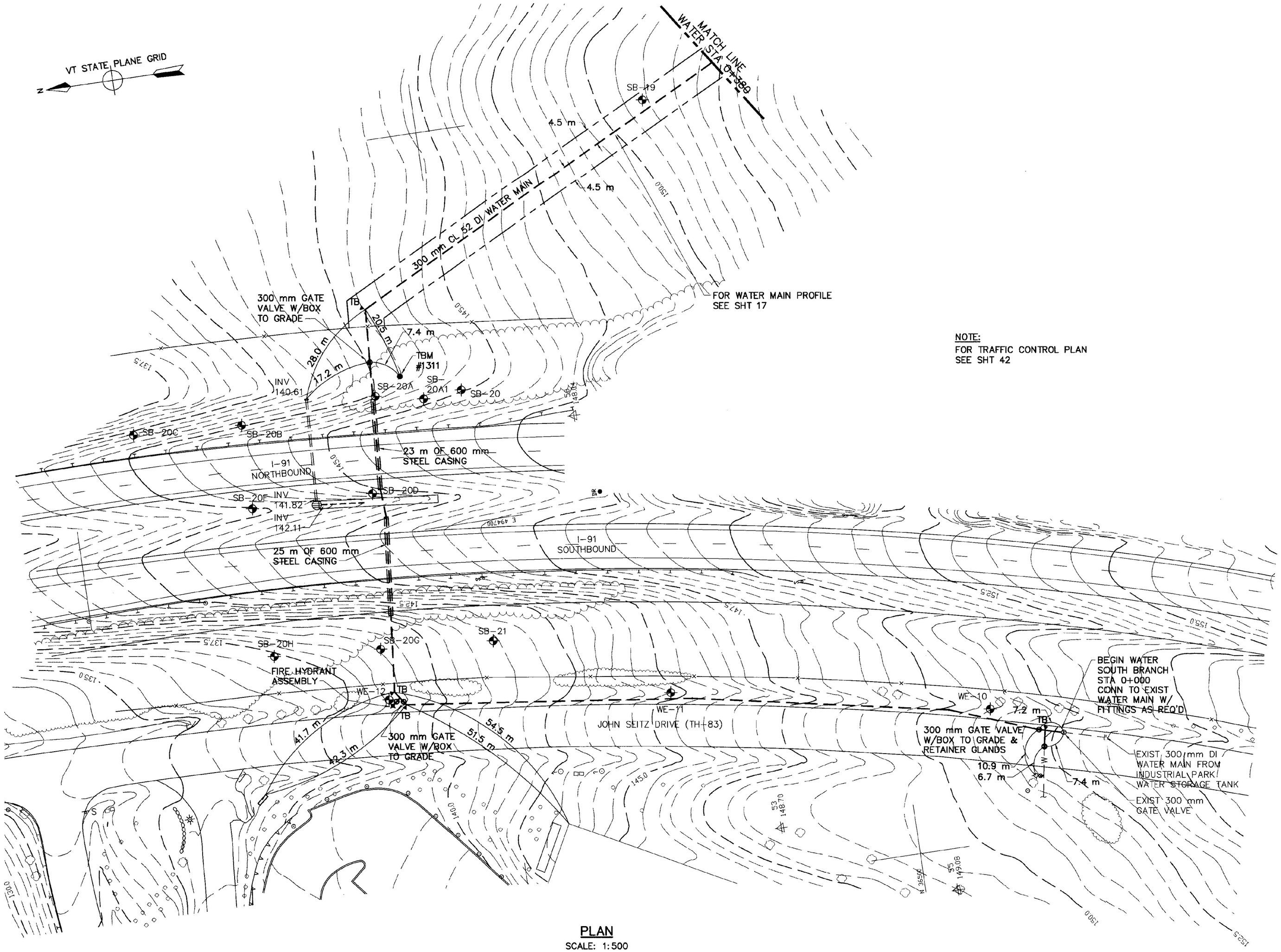

PLAN
SCALE: 1:500

NOTE:
FOR TRAFFIC CONTROL PLAN
SEE SHT 42

RECORD DRAWING

SHOWN PICTORALLY
MAY NOT BE TO SCALE

THESE AS-BUILT OR RECORD DRAWINGS HAVE BEEN PREPARED, IN PART, ON THE BASIS OF INFORMATION COMPILED AND FURNISHED BY OTHERS. THE ENGINEER WILL NOT BE RESPONSIBLE FOR ANY ERRORS OR OMISSIONS WHICH HAVE BEEN INCORPORATED INTO THIS DOCUMENT AS A RESULT OF INFORMATION BY OTHERS.

VAOT Metric

NO.	DATE	REVISIONS	DRWN	CHKD
5	9/30/98	AS-BUILT INFORMATION ADDED	DSM	KAS
4	12/26/96	CONTRACT PLANS	DSM	MPY
3	11/11/96	FINAL REVIEW REVISIONS	DSM	MPY
2	6/4/96	REVISIONS PER REVIEW COMMENTS	DSM	MPY
1	4/8/96	REVISIONS PER REVIEW COMMENTS	DSM	MPY

TIMOTHY D. SMITH & ASSOCIATES, PC ARCHITECTS
OLD RAILROAD STATION
NORTH BENNINGTON, VERMONT 05257
802-442-8184
FAX 802-442-5241

WRIGHT ENGINEERING, LTD. CIVIL ENGINEERS
128 MERCHANTS ROW - P.O. BOX 176
RUTLAND, VERMONT 05702-0176
802-775-2511
FAX 802-775-8915

STATE OF VERMONT
KEVIN A. SMITH
No. 5864
REGISTERED PROFESSIONAL ENGINEER
9/30/98

PROJECT NO.IM 091-1 (29)
WATER & SEWER EXTENSION PROJECT
TOWN OF GUILFORD
TOWN OF BRATTLEBORO

SHEET TITLE: WATER MAIN PLAN

DSGN BY: JAC
DRWN BY: DSM
CHKD BY: JAC
CHKD BY: MPY

STATE OF VERMONT
AGENCY OF TRANSPORTATION
SOUTHEAST VERMONT WELCOME CENTER
GUILFORD, VERMONT

DATE: 1-2-96
SHEET NO. 9 OF 55 SHEETS

C:\ACAD12\350\350194SB Thu Oct 8 13:31:10 1998

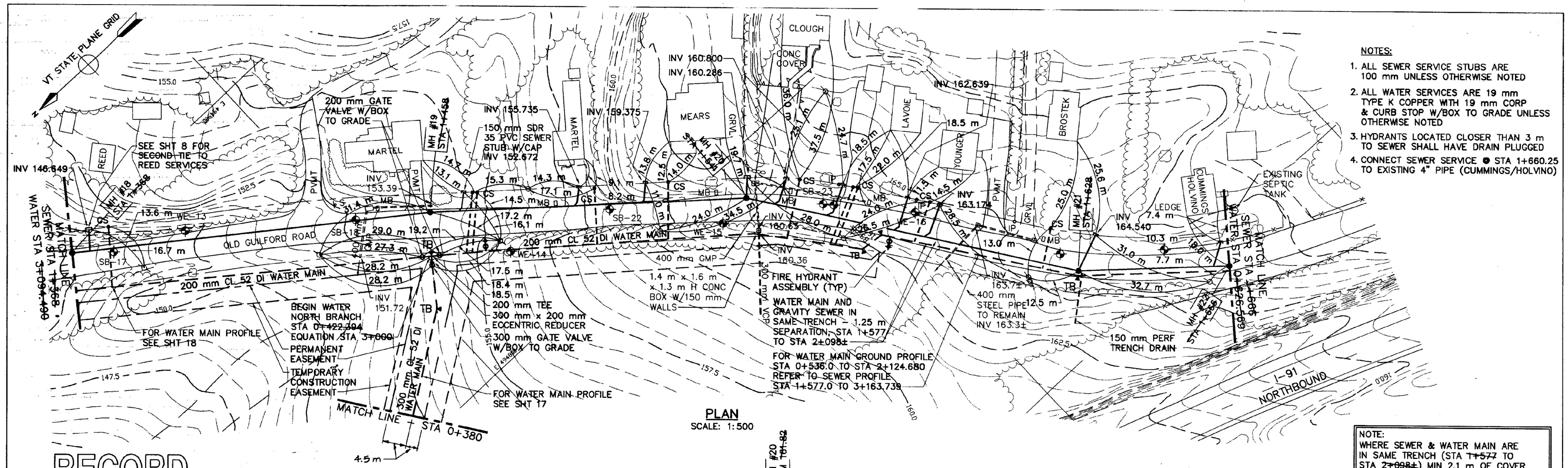

NO.	DATE	REVISIONS	DRWN	CHKD
5	9/30/98	AS-BUILT INFORMATION ADDED	DSM	KAS
4	12/28/96	CONTRACT PLANS	DSM	MPY
3	11/11/96	FINAL REVIEW REVISIONS	DSM	MPY
2	6/4/96	REVISIONS PER REVIEW COMMENTS	DSM	MPY
1	4/8/96	REVISIONS PER REVIEW COMMENTS	DSM	MPY

TIMOTHY D. SMITH & ASSOCIATES, PC ARCHITECTS
OLD RAILROAD STATION, NORTH BENNINGTON, VERMONT 05257
802-442-8184, FAX 802-442-5241
WRIGHT ENGINEERING, LTD. CIVIL ENGINEERS
128 MERCHANTS ROW - P.O. BOX 176, RUTLAND, VERMONT 05702-0176
802-775-2511, FAX 802-775-8915

STATE OF VERMONT
REGISTERED PROFESSIONAL ENGINEER
7/98

PROJECT NO.IM 091-1 (29)
WATER & SEWER EXTENSION PROJECT
TOWN OF GUILFORD
TOWN OF BRATTLEBORO

SHEET TITLE: SANITARY SEWER/WATER PLAN AND SANITARY SEWER PROFILE

DSGN BY: JAC
DRWN BY: DSM
CHKD BY: JAC
CHKD BY: MPY

STATE OF VERMONT
AGENCY OF TRANSPORTATION
SOUTHEAST VERMONT WELCOME CENTER
GUILFORD, VERMONT

DATE: 1-2-96
SHEET NO. 10 OF 55 SHEETS

C:\ACAD12\95015B01048 Tue Jun 30 11:17:38 1998

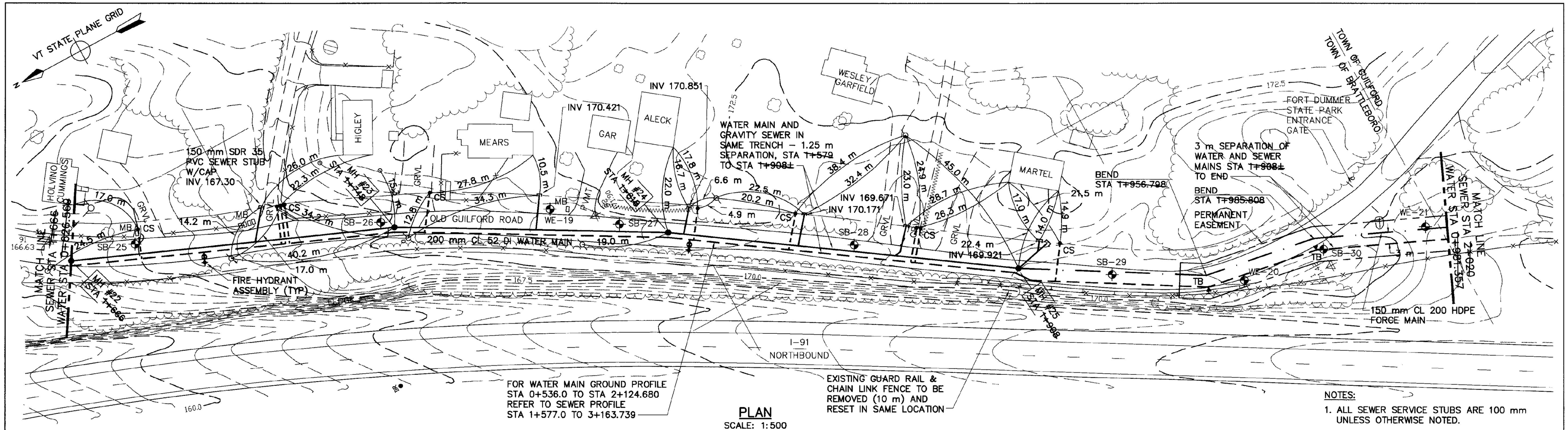

PLAN
SCALE: 1:500

NOTES:

1. ALL SEWER SERVICE STUBS ARE 100 mm UNLESS OTHERWISE NOTED.
2. ALL WATER SERVICES ARE 19 mm TYPE K COPPER WITH 19 mm CURB STOP W/BOX TO GRADE UNLESS OTHERWISE NOTED.
3. HYDRANTS LOCATED CLOSER THAN 3 m TO SEWER SHALL HAVE DRAIN PLUGGED

NOTE:
WHERE SEWER & WATER MAIN ARE IN SAME TRENCH (STA 1+577 TO STA 2+098±) MIN 2.1 m OF COVER SHALL BE MAINTAINED OVER THE SEWER

RECORD DRAWING

SHOWN PICTORALLY
MAY NOT BE TO SCALE

THESE AS-BUILT OR RECORD DRAWINGS HAVE BEEN PREPARED, IN PART, ON THE BASIS OF INFORMATION COMPILED AND FURNISHED BY OTHERS. THE ENGINEER WILL NOT BE RESPONSIBLE FOR ANY ERRORS OR OMISSIONS WHICH HAVE BEEN INCORPORATED INTO THIS DOCUMENT AS A RESULT OF INFORMATION BY OTHERS.

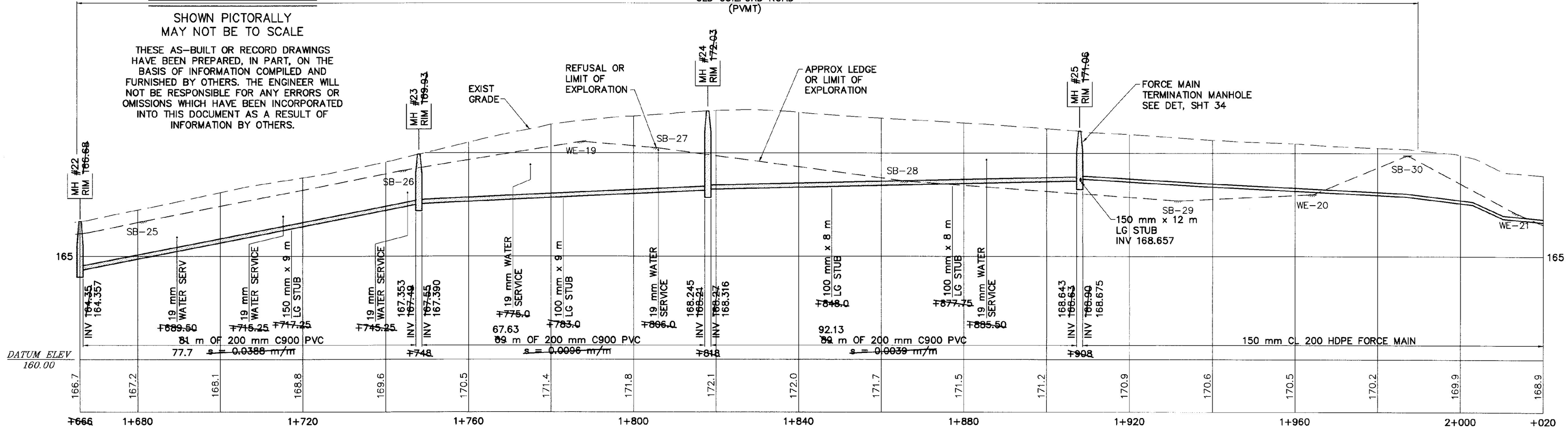

PROFILE
SCALE: 1:500 H
1:100 V

VAOT Metric

NO.	DATE	REVISIONS	DRWN	CHKD
5	9/30/98	AS-BUILT INFORMATION ADDED	DSM	KAS
4	12/26/96	CONTRACT PLANS	DSM	MPY
3	11/11/96	FINAL REVIEW REVISIONS	DSM	MPY
2	6/4/96	REVISIONS PER REVIEW COMMENTS	DSM	MPY
1	4/8/96	REVISIONS PER REVIEW COMMENTS	DSM	MPY

TIMOTHY D. SMITH & ASSOCIATES, PC ARCHITECTS
OLD RAILROAD STATION NORTH BENNINGTON, VERMONT 05257
802-442-8184 FAX 802-442-5241
WRIGHT ENGINEERING, LTD. CIVIL ENGINEERS
128 MERCHANTS ROW – P.O. BOX 176 RUTLAND, VERMONT 05702-0176
802-775-2511 FAX 802-775-8915

STATE OF VERMONT TIMOTHY K. SMITH No. 5564 REGISTERED PROFESSIONAL ENGINEER

PROJECT NO.IM 091-1 (29)
WATER & SEWER EXTENSION PROJECT
TOWN OF GUILFORD
TOWN OF BRATTLEBORO

SHEET TITLE: SANITARY SEWER/WATER PLAN AND SANITARY SEWER PROFILE

DSGN BY: JAC
DRWN BY: DSM
CHKD BY: JAC
CHKD BY: MPY

STATE OF VERMONT
AGENCY OF TRANSPORTATION
SOUTHEAST VERMONT WELCOME CENTER
GUILFORD, VERMONT

DATE: 1-2-96 SHEET NO. 11 OF 55 SHEETS

C:\ACAD12\S501\3501114B Thu Oct 8 14:29:59 1998

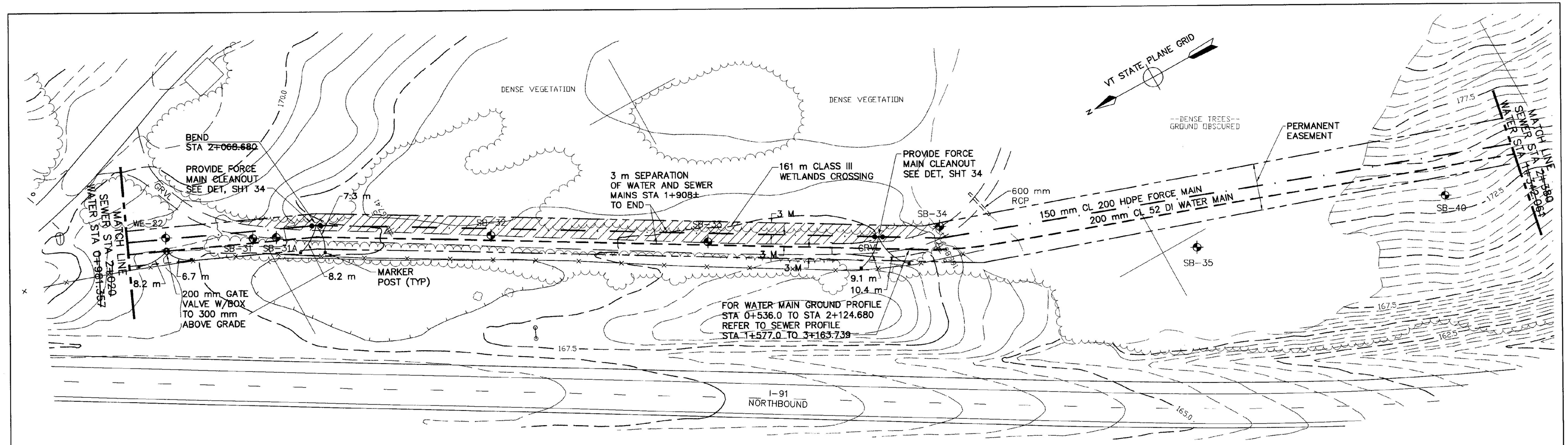

PLAN
SCALE: 1:500

RECORD DRAWING

SHOWN PICTORALLY
MAY NOT BE TO SCALE

THESE AS-BUILT OR RECORD DRAWINGS HAVE BEEN PREPARED, IN PART, ON THE BASIS OF INFORMATION COMPILED AND FURNISHED BY OTHERS. THE ENGINEER WILL NOT BE RESPONSIBLE FOR ANY ERRORS OR OMISSIONS WHICH HAVE BEEN INCORPORATED INTO THIS DOCUMENT AS A RESULT OF INFORMATION BY OTHERS.

NOTE:
WHERE SEWER & WATER MAIN ARE IN SAME TRENCH (STA 1+577 TO STA 1+908±) MIN 2.1 m OF COVER SHALL BE MAINTAINED OVER THE SEWER

NOTE:
WHERE SEWER & WATER MAIN ARE NOT IN SAME TRENCH 1.5 m OF COVER SHALL BE MAINTAINED OVER THE SEWER

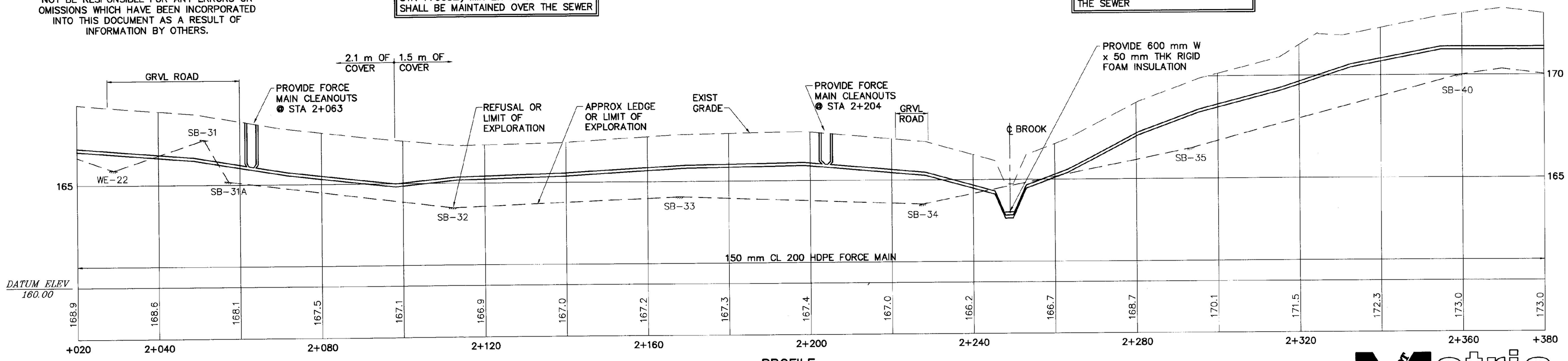

PROFILE
SCALE: 1:500 H
1:100 V

VAOT Metric

NO.	DATE	REVISIONS	DRWN	CHKD
5	9/30/98	AS-BUILT INFORMATION ADDED	DSM	KAS
4	12/26/96	CONTRACT PLANS	DSM	MPY
3	11/11/96	FINAL REVIEW REVISIONS	DSM	MPY
2	6/4/96	REVISIONS PER REVIEW COMMENTS	DSM	MPY
1	4/8/96	REVISIONS PER REVIEW COMMENTS	DSM	MPY

TIMOTHY D. SMITH & ASSOCIATES, PC ARCHITECTS
OLD RAILROAD STATION
NORTH BENNINGTON, VERMONT 05257
802-442-8184
FAX 802-442-5241
WRIGHT ENGINEERING, LTD. CIVIL ENGINEERS
128 MERCHANTS ROW - P.O. BOX 176
RUTLAND, VERMONT 05702-0176
802-775-2511
FAX 802-775-8915

STATE OF VERMONT KEVIN SMITH No. 5864 REGISTERED PROFESSIONAL ENGINEER

PROJECT NO.IM 091-1 (29)
WATER & SEWER EXTENSION PROJECT
TOWN OF GUILFORD
TOWN OF BRATTLEBORO

SHEET TITLE: SANITARY SEWER/WATER PLAN AND SANITARY SEWER PROFILE

DSGN BY: JAC
DRWN BY: DSM
CHKD BY: JAC
CHKD BY: MPY

STATE OF VERMONT
AGENCY OF TRANSPORTATION
SOUTHEAST VERMONT WELCOME CENTER
GUILFORD, VERMONT

DATE: 1-2-96
SHEET NO. 12 OF 55 SHEETS

C:\ACAD12\9501\9501112AB Thu Oct 8 14:37:50 1998

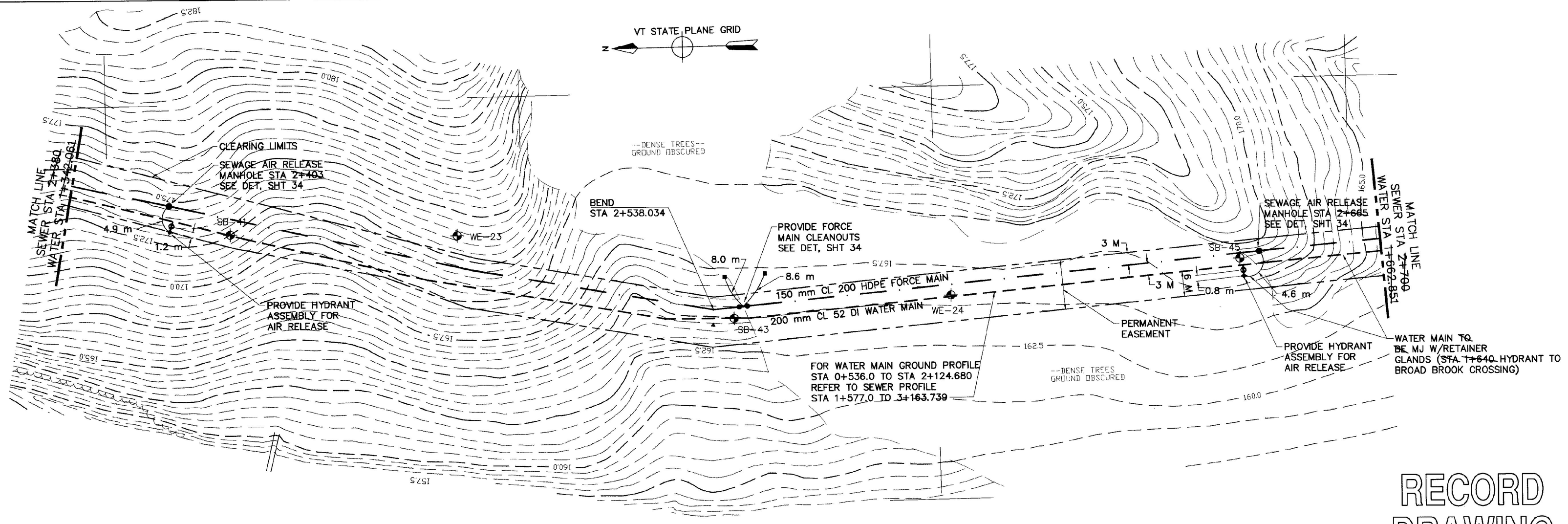

PLAN
SCALE: 1:500

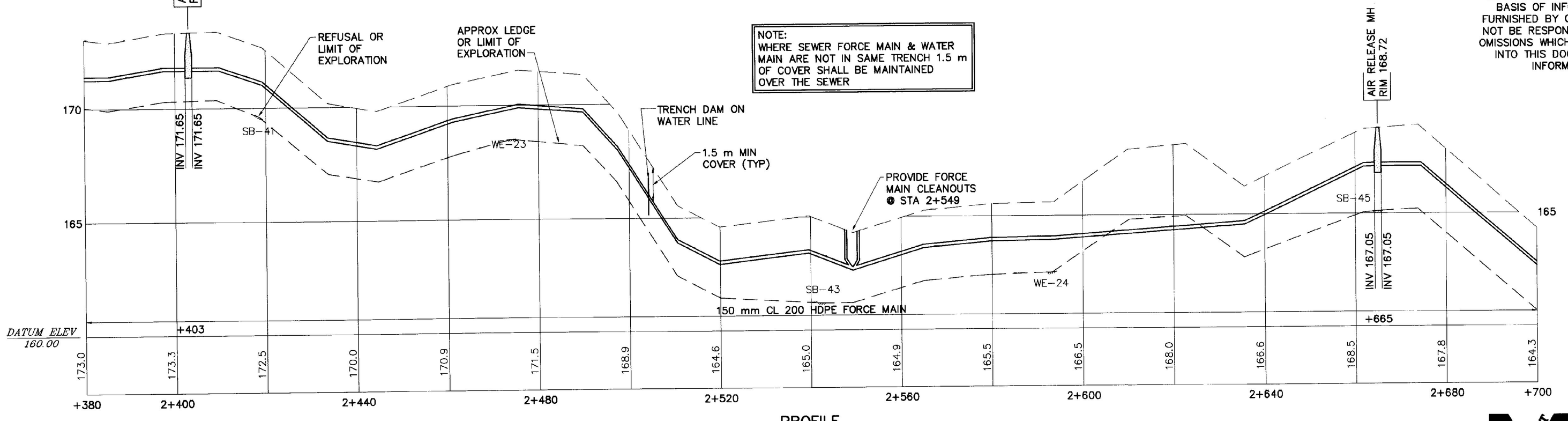

PROFILE
SCALE: 1:500 H
1:100 V

RECORD DRAWING

SHOWN PICTORALLY
MAY NOT BE TO SCALE

THESE AS-BUILT OR RECORD DRAWINGS HAVE BEEN PREPARED, IN PART, ON THE BASIS OF INFORMATION COMPILED AND FURNISHED BY OTHERS. THE ENGINEER WILL NOT BE RESPONSIBLE FOR ANY ERRORS OR OMISSIONS WHICH HAVE BEEN INCORPORATED INTO THIS DOCUMENT AS A RESULT OF INFORMATION BY OTHERS.

VAOT Metric

NO.	DATE	REVISIONS	DRWN	CHKD
5	9/30/98	AS-BUILT INFORMATION ADDED	DSM	KAS
4	12/26/96	CONTRACT PLANS	DSM	MPY
3	11/11/96	FINAL REVIEW REVISIONS	DSM	MPY
2	6/4/96	REVISIONS PER REVIEW COMMENTS	DSM	MPY
1	4/8/96	REVISIONS PER REVIEW COMMENTS	DSM	MPY

TIMOTHY D. SMITH & ASSOCIATES, PC ARCHITECTS
OLD RAILROAD STATION
802-442-8184
NORTH BENNINGTON, VERMONT 05257
FAX 802-442-5241

WRIGHT ENGINEERING, LTD. CIVIL ENGINEERS
128 MERCHANTS ROW - P.O. BOX 176
802-775-2511
RUTLAND, VERMONT 05702-0176
FAX 802-775-8915

STATE OF VERMONT
KEVIN A. SMITH No. 5864 REGISTERED PROFESSIONAL ENGINEER 9/30/98

PROJECT NO.IM 091-1 (29)
WATER & SEWER EXTENSION PROJECT
TOWN OF GUILFORD
TOWN OF BRATTLEBORO

SHEET TITLE: SANITARY SEWER/WATER PLAN AND SANITARY SEWER PROFILE

DSGN BY: JAC
DRWN BY: DSM
CHKD BY: JAC
CHKD BY: MPY

STATE OF VERMONT
AGENCY OF TRANSPORTATION
SOUTHEAST VERMONT WELCOME CENTER
GUILFORD, VERMONT

DATE: 1-2-96
SHEET NO. 13 OF 55 SHEETS

C:\ACAD12\950113\950113AB Thu Oct 8 14:43:15 1998

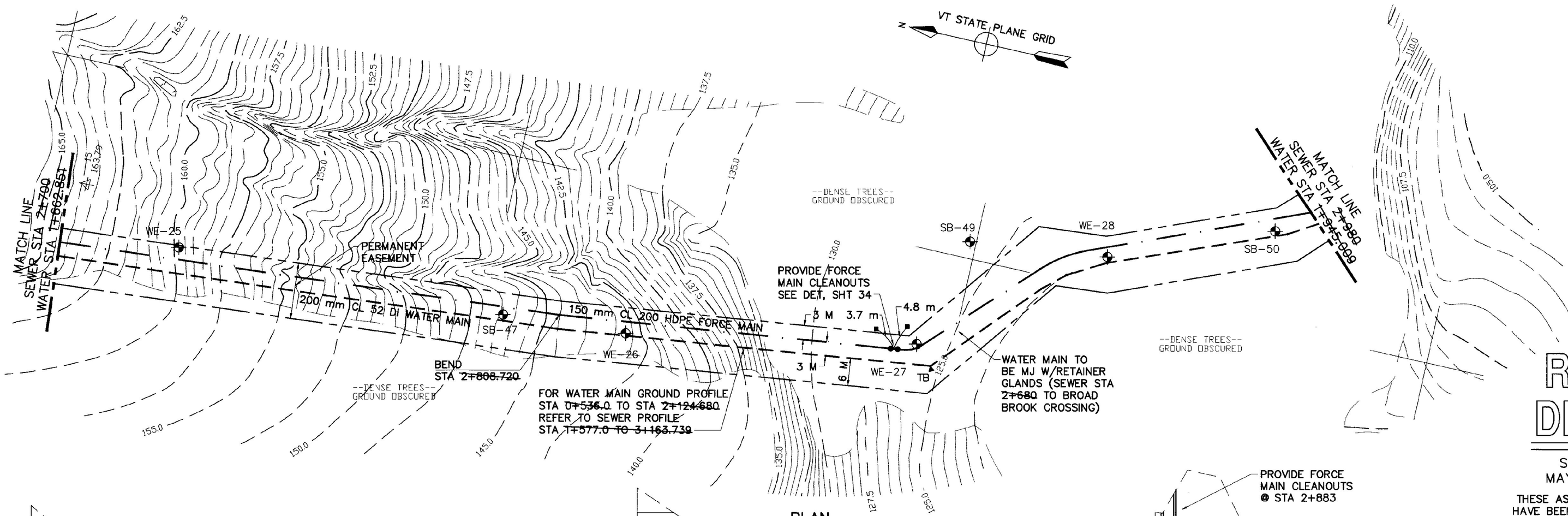

PLAN
SCALE: 1:500

RECORD DRAWING

SHOWN PICTORALLY
MAY NOT BE TO SCALE

THESE AS-BUILT OR RECORD DRAWINGS HAVE BEEN PREPARED, IN PART, ON THE BASIS OF INFORMATION COMPILED AND FURNISHED BY OTHERS. THE ENGINEER WILL NOT BE RESPONSIBLE FOR ANY ERRORS OR OMISSIONS WHICH HAVE BEEN INCORPORATED INTO THIS DOCUMENT AS A RESULT OF INFORMATION BY OTHERS.

NOTE:
WHERE SEWER FORCE MAIN & WATER MAIN ARE NOT IN SAME TRENCH 1.5 m OF COVER SHALL BE MAINTAINED OVER THE SEWER

CONTRACTOR NOTE:
JUTE EROSION CONTROL MATTING REQUIRED ON ALL DISTURBED AREAS STA 2+675 TO STA 2+875

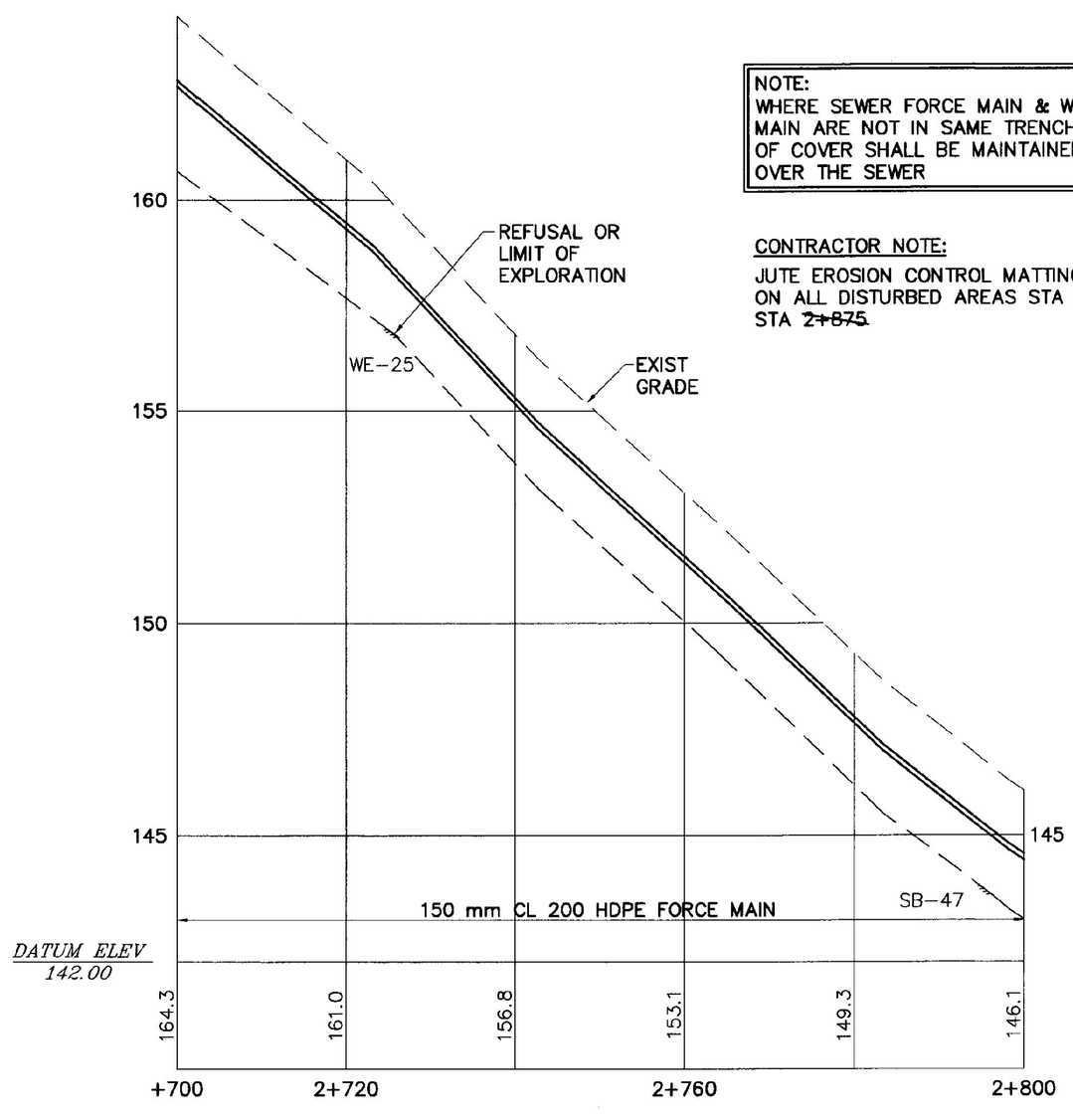

PROFILE
SCALE: 1:500 H
1:100 V

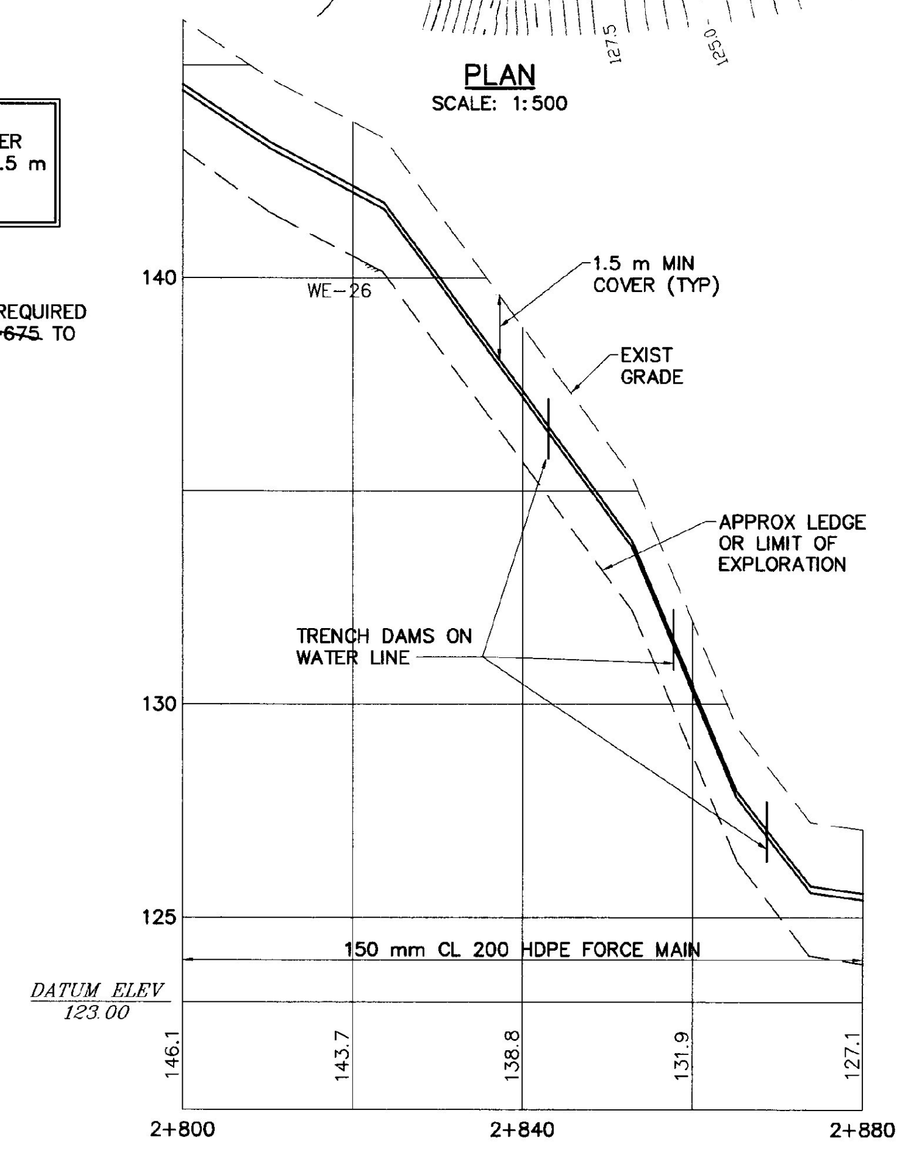

PROFILE
SCALE: 1:500 H
1:100 V

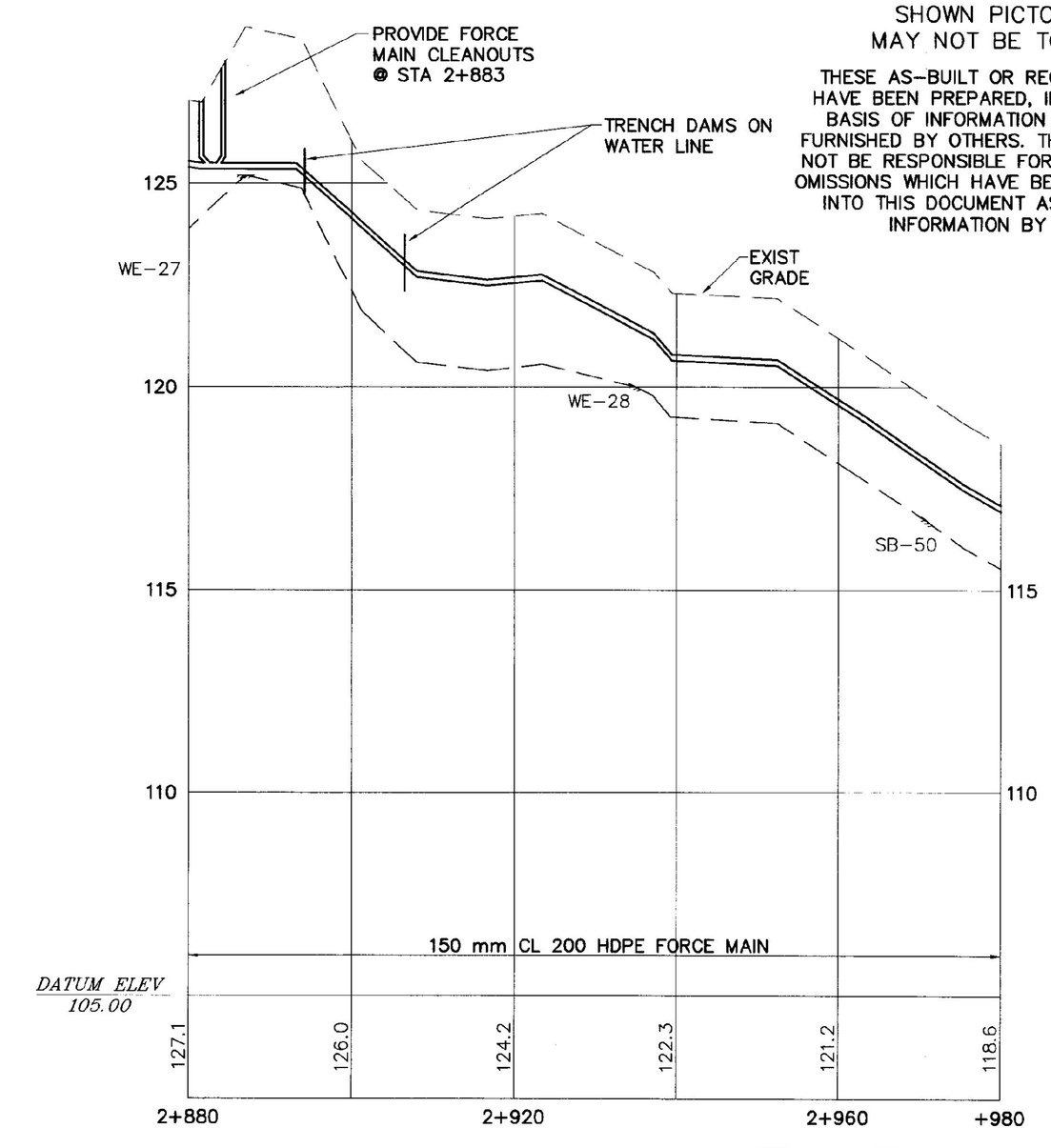

PROFILE
SCALE: 1:500 H
1:100 V

VACT Metric

NO.	DATE	REVISIONS	DRWN	CHKD
5	9/30/98	AS-BUILT INFORMATION ADDED	DSM	KAS
4	12/26/96	CONTRACT PLANS	DSM	MPY
3	11/11/96	FINAL REVIEW REVISIONS	DSM	MPY
2	6/4/96	REVISIONS PER REVIEW COMMENTS	DSM	MPY
1	4/8/96	REVISIONS PER REVIEW COMMENTS	DSM	MPY

TIMOTHY D. SMITH & ASSOCIATES, PC ARCHITECTS
OLD RAILROAD STATION NORTH BENNINGTON, VERMONT 05257
802-442-8184 FAX 802-442-5241
WRIGHT ENGINEERING, LTD. CIVIL ENGINEERS
128 MERCHANTS ROW - P.O. BOX 176 RUTLAND, VERMONT 05702-0176
802-775-2511 FAX 802-775-8915

STATE OF VERMONT KEVIN SMITH No. 5864 REGISTERED PROFESSIONAL ENGINEER

PROJECT NO.IM 091-1 (29)
WATER & SEWER EXTENSION PROJECT
TOWN OF GUILFORD
TOWN OF BRATTLEBORO

SHEET TITLE: SANITARY SEWER/WATER PLAN AND SANITARY SEWER PROFILE

DSGN BY: JAC
DRWN BY: DSM
CHKD BY: JAC
CHKD BY: MPY

STATE OF VERMONT
AGENCY OF TRANSPORTATION
SOUTHEAST VERMONT WELCOME CENTER
GUILFORD, VERMONT

DATE: 1-2-96 SHEET NO. 14 OF 55 SHEETS

C:\ACAD12\9501\950114AB Thu Oct 8 15:01:30 1998

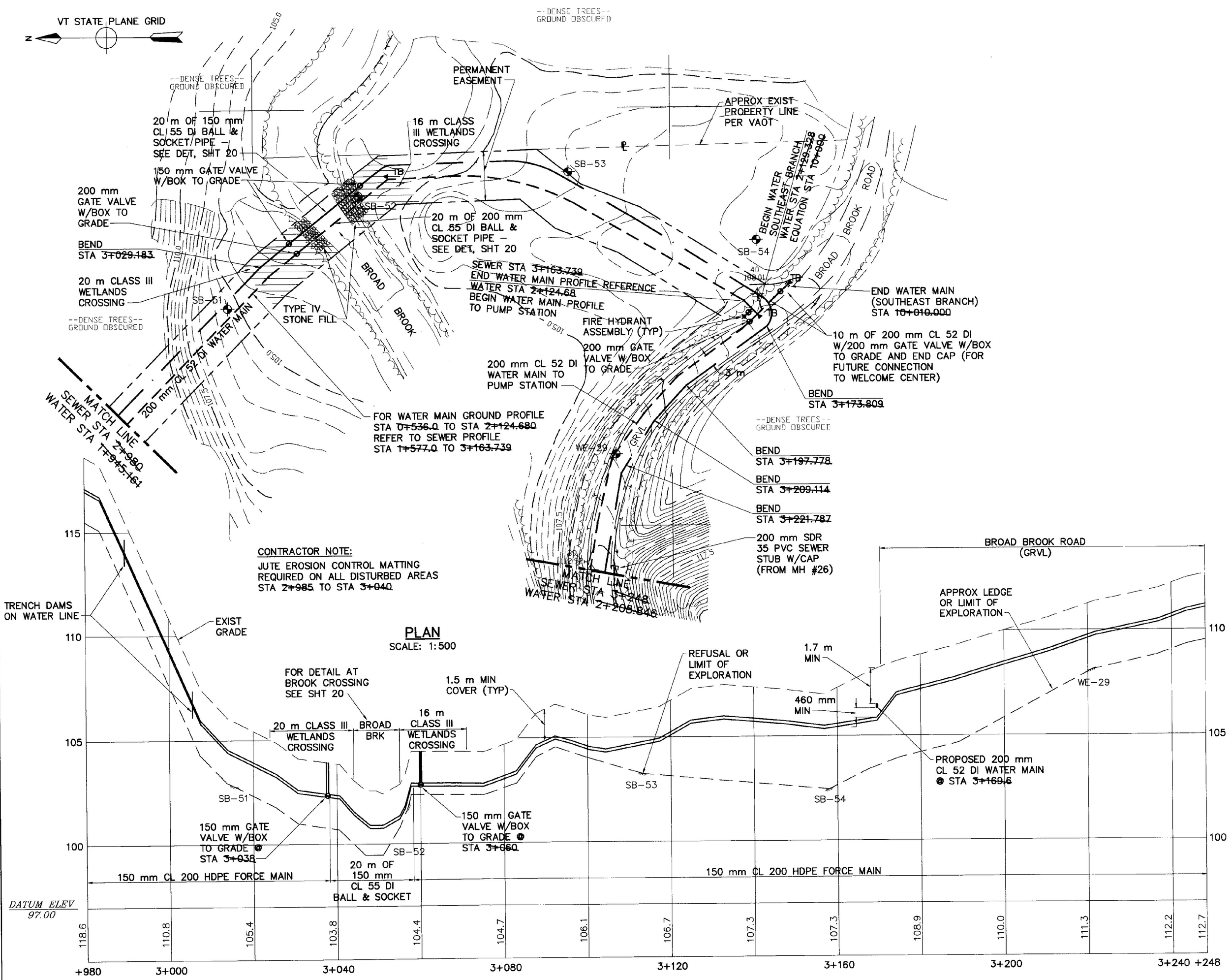

RECORD DRAWING

SHOWN PICTORALLY
MAY NOT BE TO SCALE

THESE AS-BUILT OR RECORD DRAWINGS HAVE BEEN PREPARED, IN PART, ON THE BASIS OF INFORMATION COMPILED AND FURNISHED BY OTHERS. THE ENGINEER WILL NOT BE RESPONSIBLE FOR ANY ERRORS OR OMISSIONS WHICH HAVE BEEN INCORPORATED INTO THIS DOCUMENT AS A RESULT OF INFORMATION BY OTHERS.

VAOT Metric

NO.	DATE	REVISIONS	DRWN	CHKD
5	9/30/98	AS-BUILT INFORMATION ADDED	DSM	KAS
4	12/26/96	CONTRACT PLANS	DSM	MPY
3	11/11/96	FINAL REVIEW REVISIONS	DSM	MPY
2	6/4/96	REVISIONS PER REVIEW COMMENTS	DSM	MPY
1	4/8/96	REVISIONS PER REVIEW COMMENTS	DSM	MPY

TIMOTHY D. SMITH & ASSOCIATES, PC ARCHITECTS
OLD RAILROAD STATION NORTH BENNINGTON, VERMONT 05257
802-442-8184 FAX 802-442-5241
WRIGHT ENGINEERING, LTD. CIVIL ENGINEERS
128 MERCHANTS ROW - P.O. BOX 176 RUTLAND, VERMONT 05702-0176
802-775-2511 FAX 802-775-8915

STATE OF VERMONT KEITH M. SMITH No. 5854 REGISTERED PROFESSIONAL ENGINEER 9/30/98

PROJECT NO.IM 091-1 (29)
WATER & SEWER EXTENSION PROJECT
TOWN OF GUILFORD
TOWN OF BRATTLEBORO

SHEET TITLE: SANITARY SEWER/WATER PLAN AND SANITARY SEWER PROFILE

DSGN BY: JAC
DRWN BY: DSM
CHKD BY: JAC
CHKD BY: MPY

STATE OF VERMONT
AGENCY OF TRANSPORTATION
SOUTHEAST VERMONT WELCOME CENTER
GUILFORD, VERMONT

DATE: 1-2-96 SHEET NO. 15 OF 55 SHEETS

C:\ACAD12\DOS1\DS011548 Thu Oct 8 15:02:25 1998

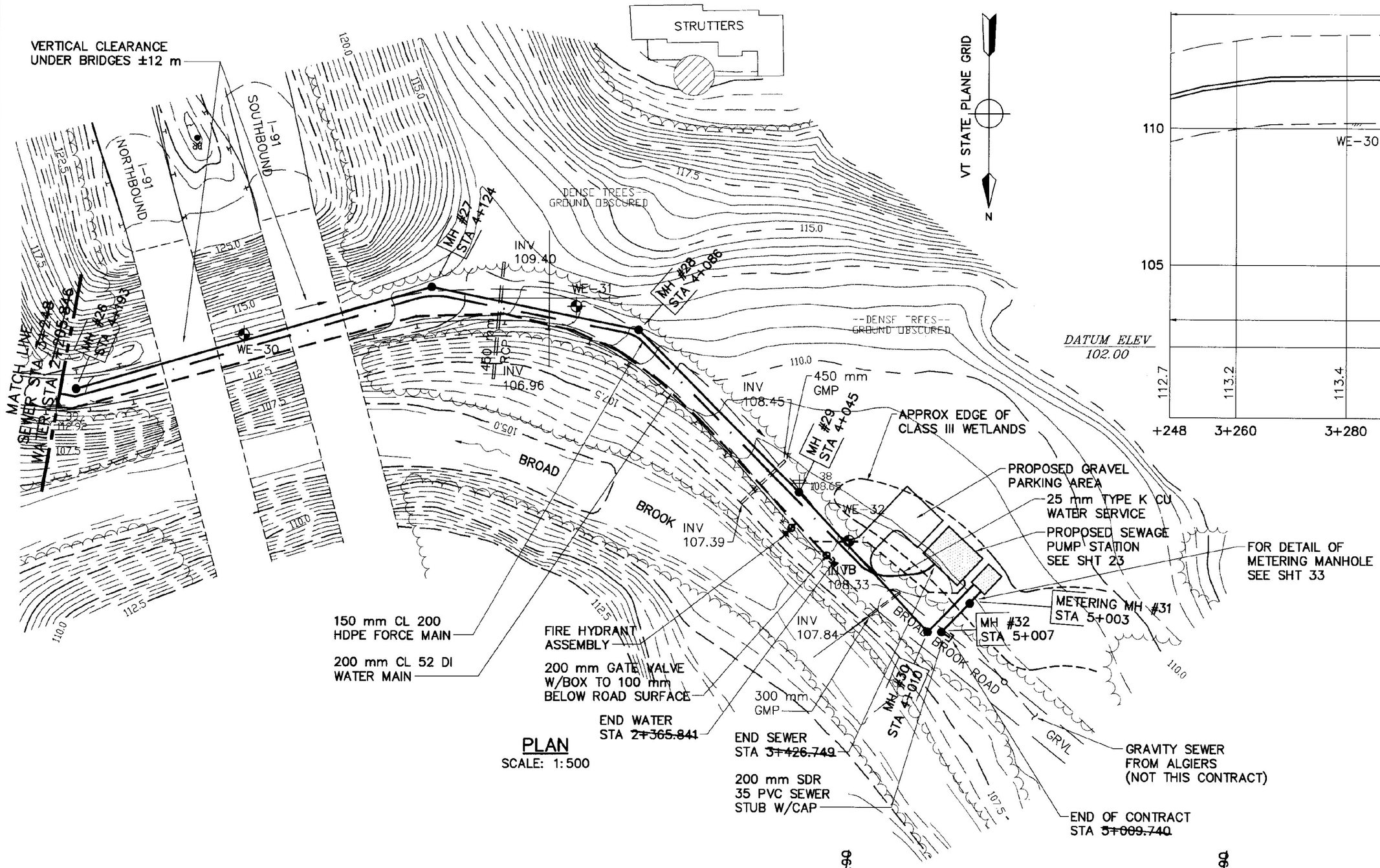

PLAN
SCALE: 1:500

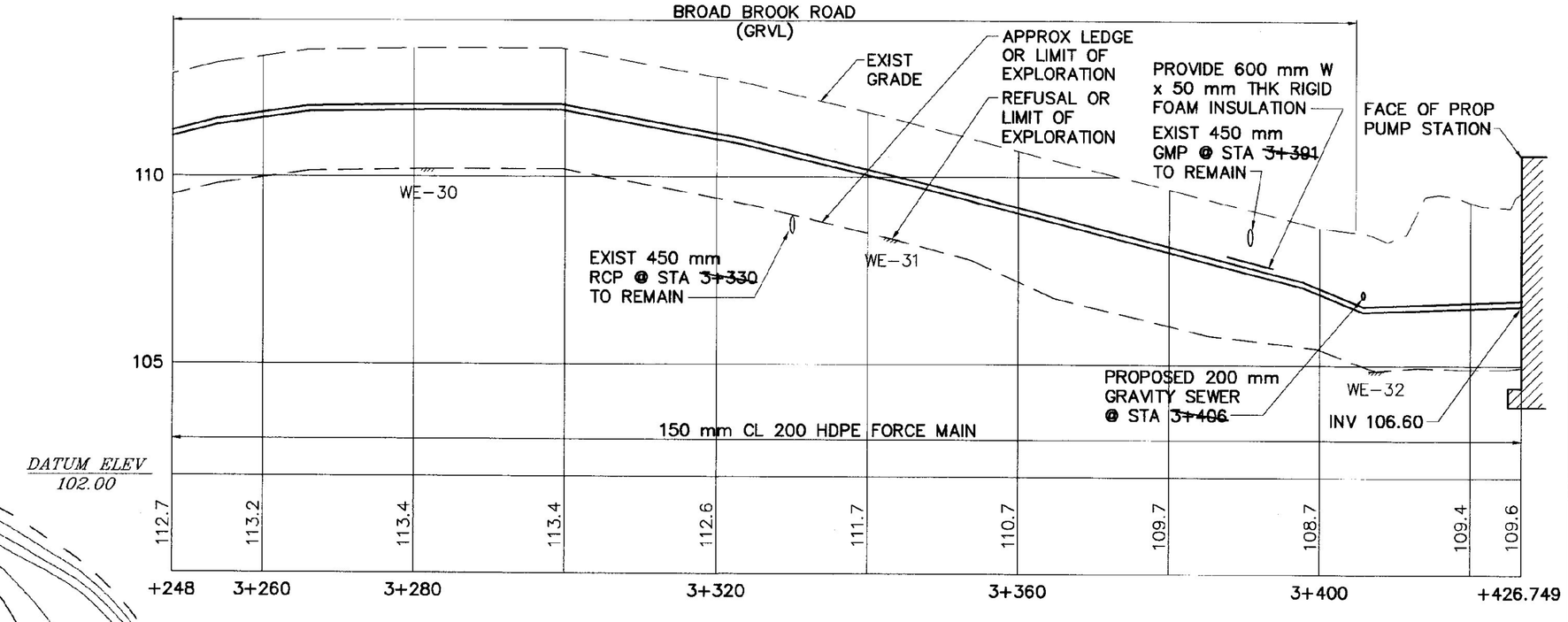

FORCE MAIN PROFILE
SCALE: 1:500 H
1:100 V

NOTE:
FOR WATER MAIN PROFILE
SEE SHT 19

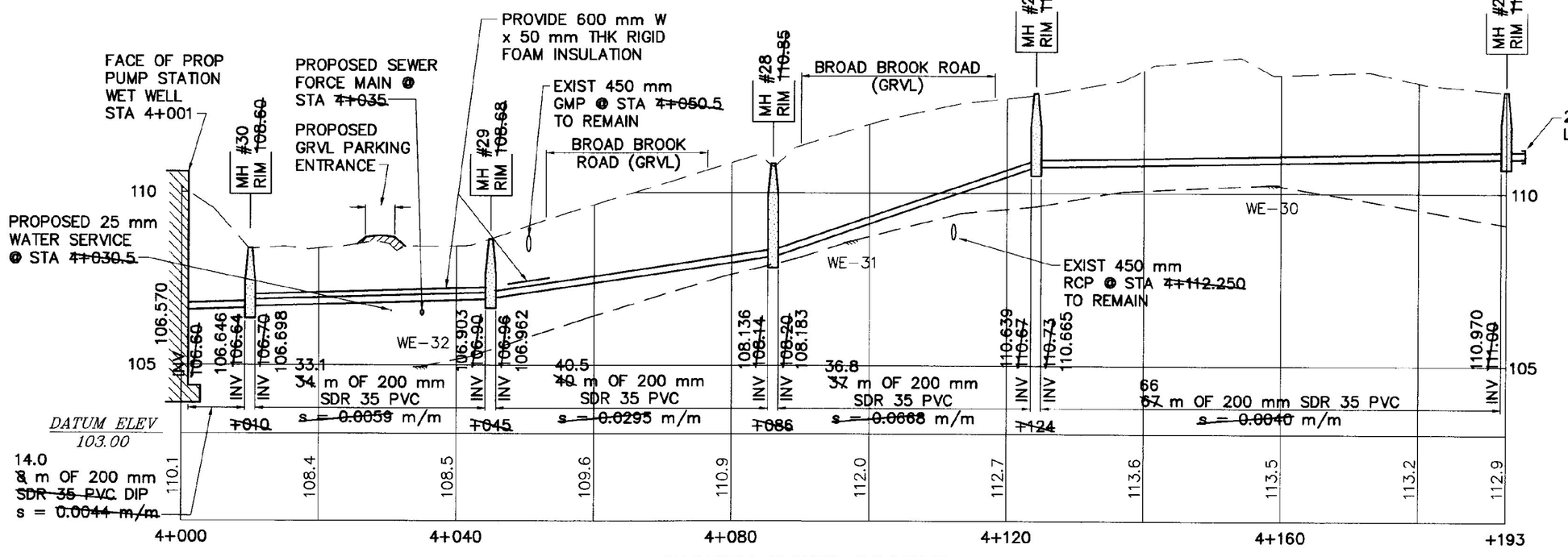

GRAVITY SEWER PROFILE
SCALE: 1:500 H
1:100 V

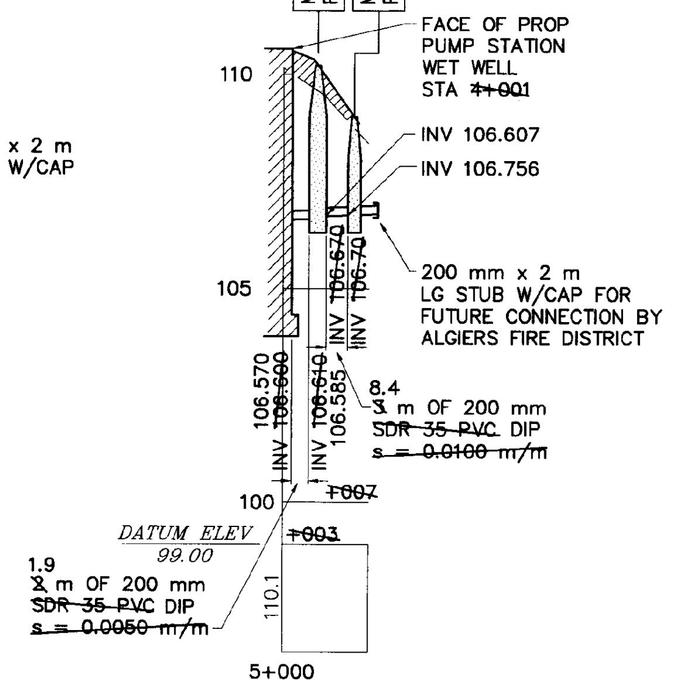

GRAVITY SEWER PROFILE
SCALE: 1:500 H
1:100 V

RECORD DRAWING

SHOWN PICTORALLY
MAY NOT BE TO SCALE

THESE AS-BUILT OR RECORD DRAWINGS HAVE BEEN PREPARED, IN PART, ON THE BASIS OF INFORMATION COMPILED AND FURNISHED BY OTHERS. THE ENGINEER WILL NOT BE RESPONSIBLE FOR ANY ERRORS OR OMISSIONS WHICH HAVE BEEN INCORPORATED INTO THIS DOCUMENT AS A RESULT OF INFORMATION BY OTHERS.

VAOT Metric

NO.	DATE	REVISIONS	DRWN	CHKD
5	9/30/98	AS-BUILT INFORMATION ADDED	DSM	KAS
4	12/26/96	CONTRACT PLANS	DSM	MPY
3	11/11/96	FINAL REVIEW REVISIONS	DSM	MPY
2	6/4/96	REVISIONS PER REVIEW COMMENTS	DSM	MPY
1	4/8/96	REVISIONS PER REVIEW COMMENTS	DSM	MPY

TIMOTHY D. SMITH & ASSOCIATES, PC ARCHITECTS
OLD RAILROAD STATION, NORTH BENNINGTON, VERMONT 05257
802-442-8184 FAX 802-442-5241
WRIGHT ENGINEERING, LTD. CIVIL ENGINEERS
128 MERCHANTS ROW - P.O. BOX 176, RUTLAND, VERMONT 05702-0176
802-775-2511 FAX 802-775-8915

STATE OF VERMONT KEVIN A SMITH 6864 REGISTERED PROFESSIONAL ENGINEER 98

PROJECT NO.IM 091-1 (29)
WATER & SEWER EXTENSION PROJECT
TOWN OF GUILFORD
TOWN OF BRATTLEBORO

SHEET TITLE: SANITARY SEWER/WATER PLAN AND SANITARY SEWER PROFILE

DSGN BY: JAC
DRWN BY: DSM
CHKD BY: JAC
CHKD BY: MPY

STATE OF VERMONT
AGENCY OF TRANSPORTATION
SOUTHEAST VERMONT WELCOME CENTER
GUILFORD, VERMONT

DATE: 1-2-96 SHEET NO. 16 OF 55 SHEETS

C:\ACAD12\G501\9501164B Thu Oct 8 15:15:48 1998

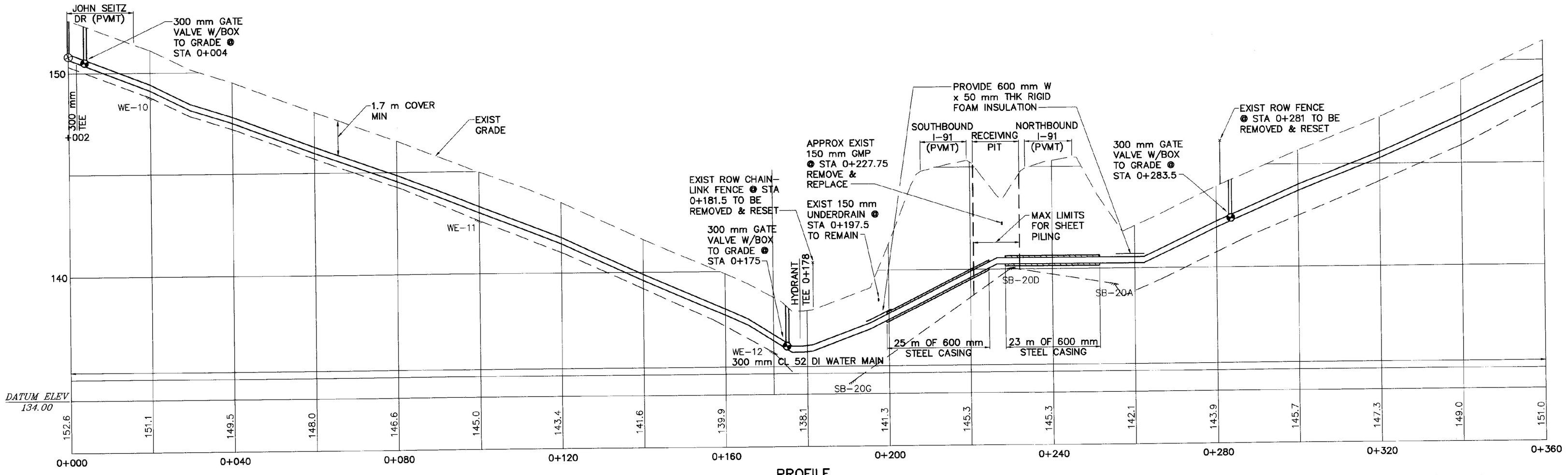

PROFILE
SCALE: 1:500 H
1:100 V

RECORD DRAWING

SHOWN PICTORALLY
MAY NOT BE TO SCALE

THESE AS-BUILT OR RECORD DRAWINGS HAVE BEEN PREPARED, IN PART, ON THE BASIS OF INFORMATION COMPILED AND FURNISHED BY OTHERS. THE ENGINEER WILL NOT BE RESPONSIBLE FOR ANY ERRORS OR OMISSIONS WHICH HAVE BEEN INCORPORATED INTO THIS DOCUMENT AS A RESULT OF INFORMATION BY OTHERS.

NOTES:

1. FOR CONTINUATION OF WATER MAIN PROFILE SEE SEWER FORCE MAIN PROFILE STA 1+577.0 TO 3+163.739
2. FOR WATER MAIN PLAN SEE SHT 9

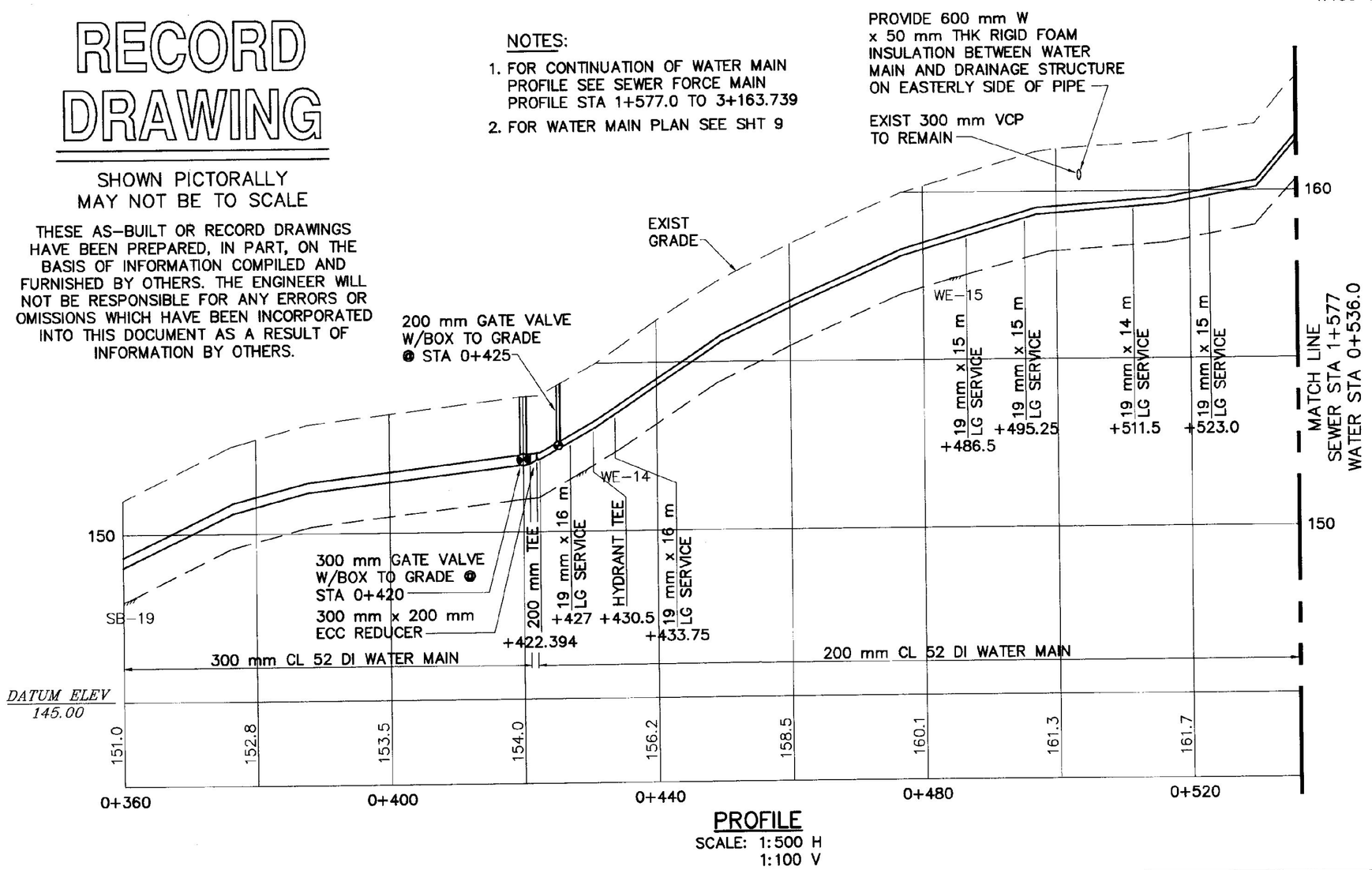

PROFILE
SCALE: 1:500 H
1:100 V

GENERAL NOTES:

1. SHEET PILING MAY BE DRIVEN 1.5 m OUTSIDE THE SHOULDER POINT, TO ALLOW FOR A SHORTER SLEEVE.
2. EARTH BACKFILL TO BE MADE IN 150 mm LIFTS AND COMPACTED TO NOT LESS THAN 95% MAX DRY DENSITY.

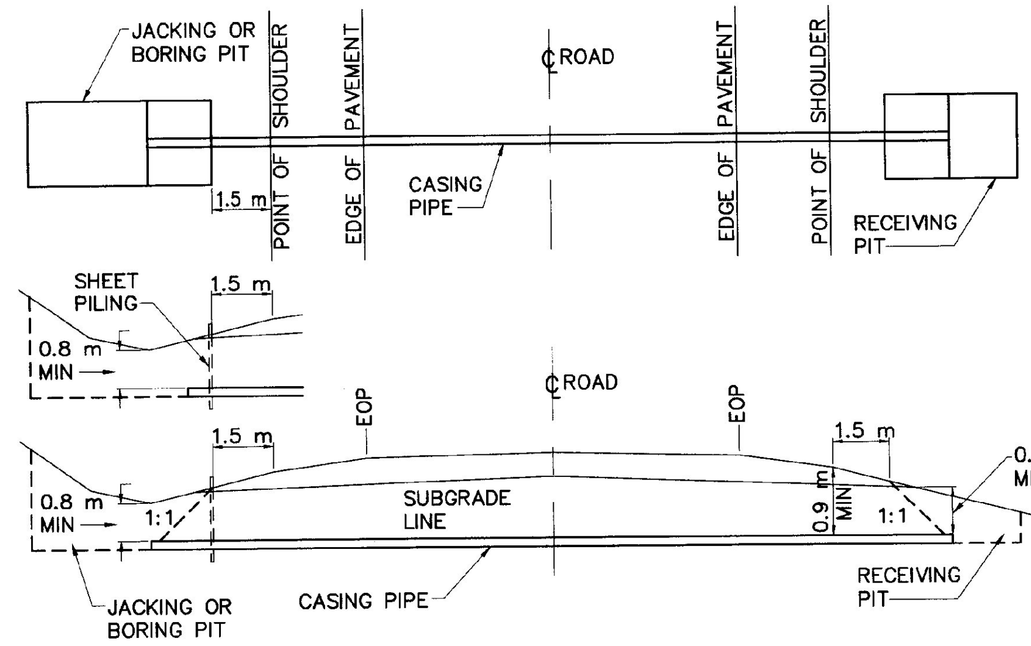

PIPE JACKING/BORING DETAIL
NOT TO SCALE

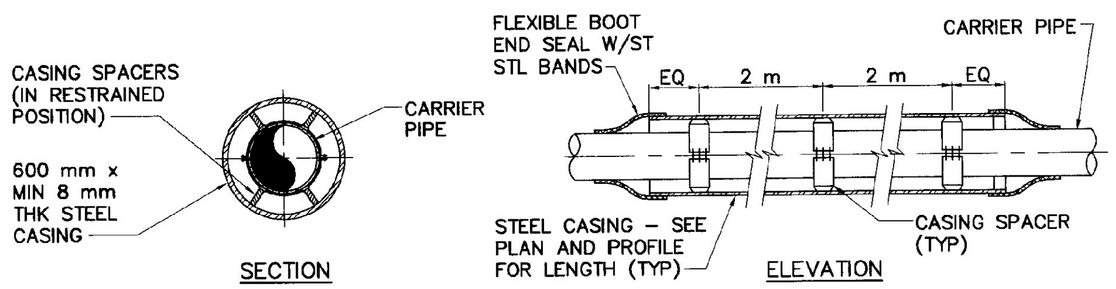

PIPE CASING AND SPACER DETAIL
NOT TO SCALE

Metric

NO.	DATE	REVISIONS	DRWN	CHKD
5	9/30/98	NO AS-BUILT INFORMATION ADDED	DSM	KAS
4	12/26/96	CONTRACT PLANS	DSM	MPY
3	11/11/96	FINAL REVIEW REVISIONS	DSM	MPY
2	6/4/96	REVISIONS PER REVIEW COMMENTS	DSM	MPY
1	4/8/96	REVISIONS PER REVIEW COMMENTS	DSM	MPY

TIMOTHY D. SMITH & ASSOCIATES, PC ARCHITECTS
OLD RAILROAD STATION NORTH BENNINGTON, VERMONT 05257
802-442-8184 FAX 802-442-5241
WRIGHT ENGINEERING, LTD. CIVIL ENGINEERS
128 MERCHANTS ROW - P.O. BOX 176 RUTLAND, VERMONT 05702-0176
802-775-2511 FAX 802-775-8915

STATE OF VERMONT
KEVIN D. SMITH No. 5884 REGISTERED PROFESSIONAL ENGINEER

PROJECT NO.IM 091-1 (29)
WATER & SEWER EXTENSION PROJECT
TOWN OF GUILFORD
TOWN OF BRATTLEBORO

SHEET TITLE: WATER MAIN PROFILE

DSGN BY: JAC
DRWN BY: DSM
CHKD BY: JAC
CHKD BY: MPY

STATE OF VERMONT
AGENCY OF TRANSPORTATION
SOUTHEAST VERMONT WELCOME CENTER
GUILFORD, VERMONT

DATE: 1-2-96 SHEET NO. 17 OF 55 SHEETS

C:\ACAD12\S501\S501748 Thu Oct 8 15:17:34 1998

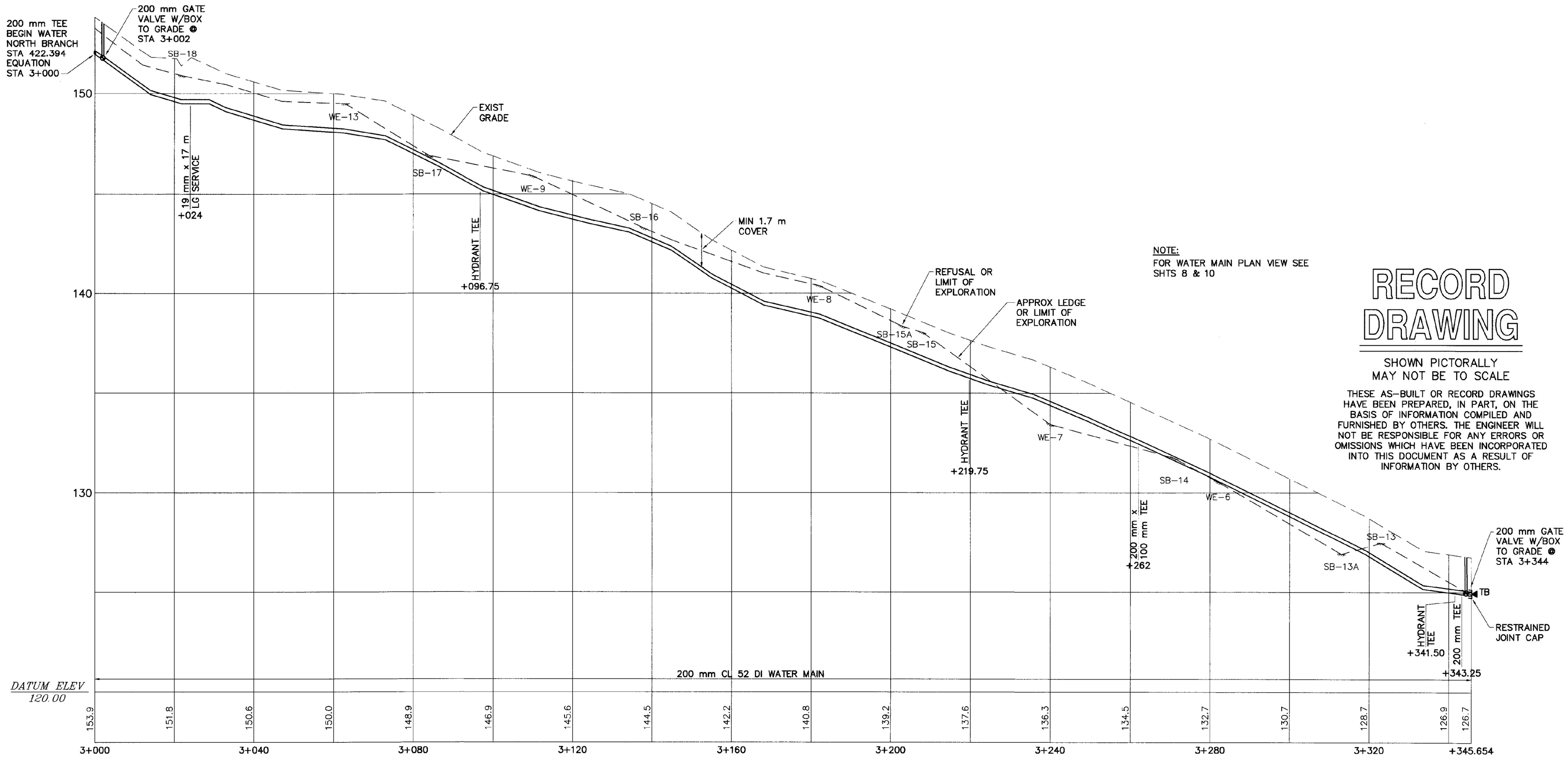

NOTE:
FOR WATER MAIN PLAN VIEW SEE SHTS 8 & 10

RECORD DRAWING

SHOWN PICTORALLY
MAY NOT BE TO SCALE

THESE AS-BUILT OR RECORD DRAWINGS HAVE BEEN PREPARED, IN PART, ON THE BASIS OF INFORMATION COMPILED AND FURNISHED BY OTHERS. THE ENGINEER WILL NOT BE RESPONSIBLE FOR ANY ERRORS OR OMISSIONS WHICH HAVE BEEN INCORPORATED INTO THIS DOCUMENT AS A RESULT OF INFORMATION BY OTHERS.

WATER MAIN PROFILE

SCALE: 1:500 H
1:100 V

Metric

NO.	DATE	REVISIONS	DRWN	CHKD
5	9/30/98	NO AS-BUILT INFORMATION ADDED	DSM	KAS
4	12/26/96	CONTRACT PLANS	DSM	MPY
3	11/11/96	FINAL REVIEW REVISIONS	DSM	MPY
2	6/4/96	REVISIONS PER REVIEW COMMENTS	DSM	MPY
1	4/8/96	REVISIONS PER REVIEW COMMENTS	DSM	MPY

TIMOTHY D. SMITH & ASSOCIATES, PC ARCHITECTS
OLD RAILROAD STATION NORTH BENNINGTON, VERMONT 05257
802-442-8184 FAX 802-442-5241
WRIGHT ENGINEERING, LTD. CIVIL ENGINEERS
128 MERCHANTS ROW - P.O. BOX 176 RUTLAND, VERMONT 05702-0176
802-775-2511 FAX 802-775-8915

STATE OF VERMONT
KEVIN A. SMITH
No 5[illegible]
REGISTERED PROFESSIONAL ENGINEER

PROJECT NO.IM 091-1 (29)
WATER & SEWER EXTENSION PROJECT
TOWN OF GUILFORD
TOWN OF BRATTLEBORO

SHEET TITLE: WATER MAIN PROFILE

DSGN BY: JAC
DRWN BY: DSM
CHKD BY: JAC
CHKD BY: MPY

STATE OF VERMONT
AGENCY OF TRANSPORTATION
SOUTHEAST VERMONT WELCOME CENTER
GUILFORD, VERMONT

DATE: 1-2-96 SHEET NO. 18 OF 55 SHEETS

C:\ACAD12\9501\950118AB Thu Oct 8 15:18:49 1998

NOTE:
FOR WATER MAIN PLAN
SEE SHTS 15 & 16

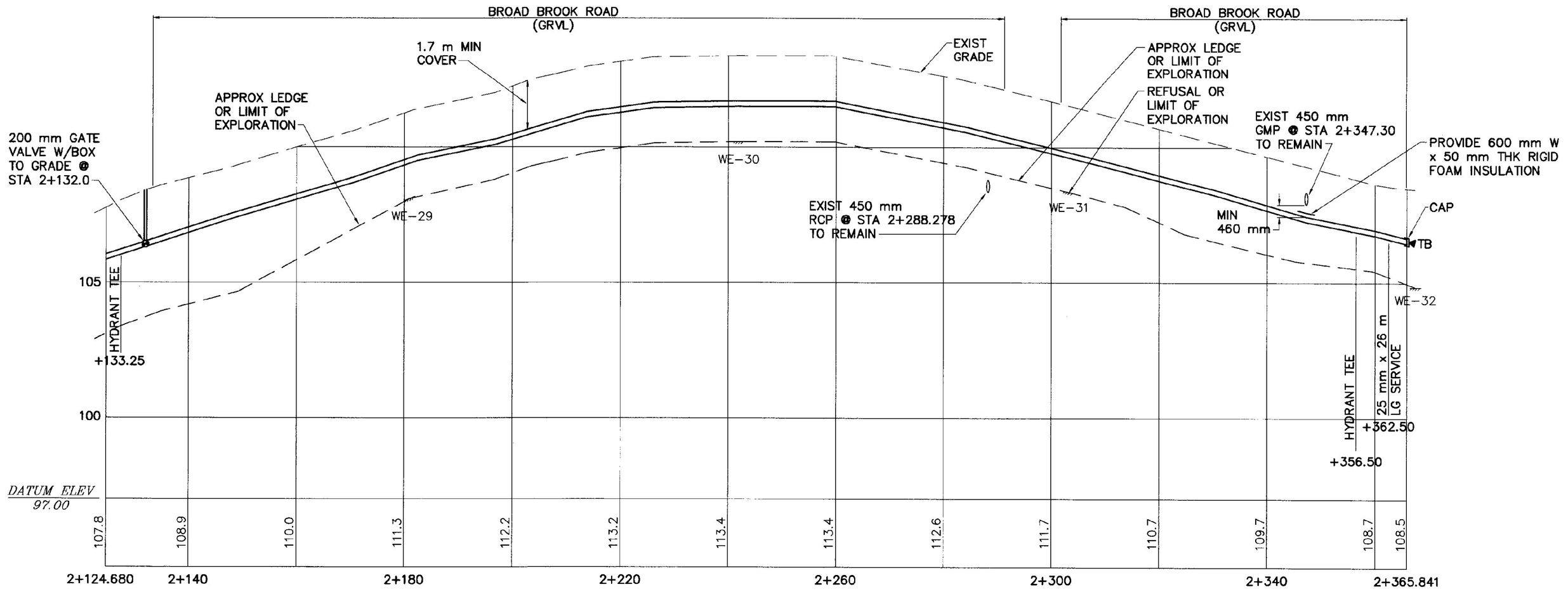

WATER MAIN PROFILE
SCALE: 1:500 H
1:100 V

RECORD
DRAWING

SHOWN PICTORALLY
MAY NOT BE TO SCALE

THESE AS-BUILT OR RECORD DRAWINGS HAVE BEEN PREPARED, IN PART, ON THE BASIS OF INFORMATION COMPILED AND FURNISHED BY OTHERS. THE ENGINEER WILL NOT BE RESPONSIBLE FOR ANY ERRORS OR OMISSIONS WHICH HAVE BEEN INCORPORATED INTO THIS DOCUMENT AS A RESULT OF INFORMATION BY OTHERS.

VAOT Metric

NO.	DATE	REVISIONS	DRWN	CHKD
5	9/30/98	NO AS-BUILT INFORMATION ADDED	DSM	KAS
4	12/26/96	CONTRACT PLANS	DSM	MPY
3	11/11/96	FINAL REVIEW REVISIONS	DSM	MPY
2	6/4/96	REVISIONS PER REVIEW COMMENTS	DSM	MPY
1	4/8/96	REVISIONS PER REVIEW COMMENTS	DSM	MPY

TIMOTHY D. SMITH & ASSOCIATES, PC ARCHITECTS
OLD RAILROAD STATION NORTH BENNINGTON, VERMONT 05257
802-442-8184 FAX 802-442-5241
WRIGHT ENGINEERING, LTD. CIVIL ENGINEERS
128 MERCHANTS ROW - P.O. BOX 176 RUTLAND, VERMONT 05702-0176
802-775-2511 FAX 802-775-8915

STATE OF VERMONT
KEVIN B. SMITH No. 8864 REGISTERED PROFESSIONAL ENGINEER

PROJECT NO.IM 091-1 (29)
WATER & SEWER EXTENSION PROJECT
TOWN OF GUILFORD
TOWN OF BRATTLEBORO

SHEET TITLE: WATER MAIN TO PUMP STATION PROFILE

DSGN BY: JAC
DRWN BY: DSM
CHKD BY: JAC
CHKD BY: MPY

STATE OF VERMONT
AGENCY OF TRANSPORTATION
SOUTHEAST VERMONT WELCOME CENTER
GUILFORD, VERMONT

DATE: 1-2-96
SHEET NO. 19 OF 55 SHEETS

C:\ACAD12\950\1950119AB Thu Oct 8 15:22:31 1998

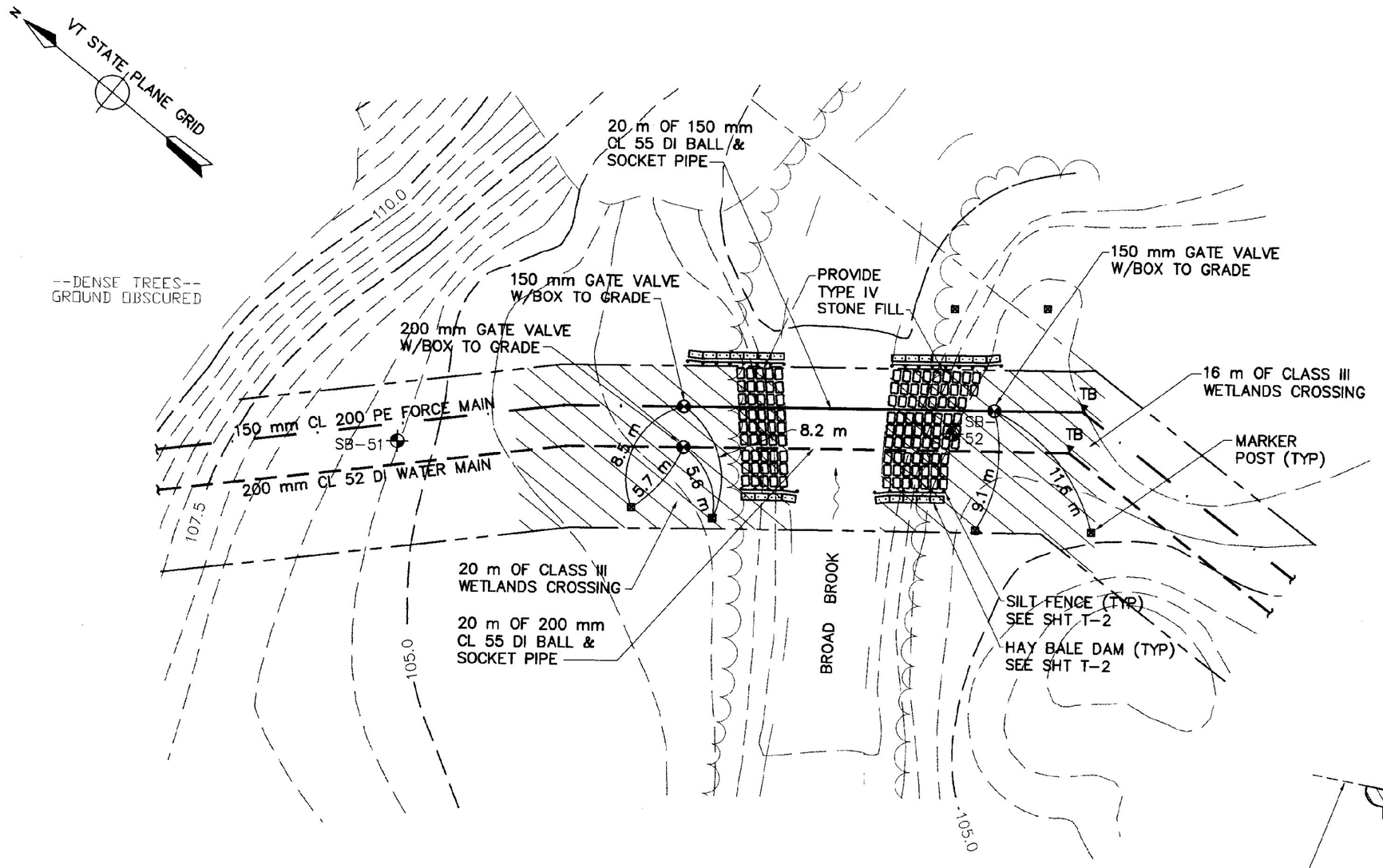

RIVER CROSSING PLAN

SCALE: 1:250

RECORD DRAWING

SHOWN PICTORALLY
MAY NOT BE TO SCALE

THESE AS-BUILT OR RECORD DRAWINGS HAVE BEEN PREPARED, IN PART, ON THE BASIS OF INFORMATION COMPILED AND FURNISHED BY OTHERS. THE ENGINEER WILL NOT BE RESPONSIBLE FOR ANY ERRORS OR OMISSIONS WHICH HAVE BEEN INCORPORATED INTO THIS DOCUMENT AS A RESULT OF INFORMATION BY OTHERS.

CONSTRUCTION SEQUENCE

GENERAL

SEWER FORCE MAIN AND WATER MAIN CROSSING OF BROAD BROOK ROAD SHALL TAKE PLACE DURING A LOW FLOW PERIOD BETWEEN JUNE 1st AND OCTOBER 1st.

FLOW IN THE WATERWAY SHALL BE MAINTAINED AT ALL TIMES BY THE CONTRACTOR DURING CONSTRUCTION.

RELEASES OF SILTS OR FINES INTO THE WATERWAY ARE PROHIBITED.

PRIOR TO BEGINNING WORK, THE CONTRACTOR SHALL SUBMIT AN EROSION CONTROL PLAN AND PLAN OF WORK FOR THE CROSSING TO THE ENGINEER FOR REVIEW AND APPROVAL.

PUMPING FROM ANY EXCAVATION AREA SHALL BE DISCHARGED TO AN UPLAND AREA OR SETTLING BASIN SUCH THAT PUMPED WATER IS ESSENTIALLY CLARIFIED BEFORE REENTERING STREAM FLOW.

GENERAL SEQUENCE

1. CONTRACTOR TO INSTALL EROSION CONTROL MEASURES ON BANKS PRIOR TO ANY EARTHWORK.
2. COFFERDAM (SHEET PILING, JERSEY BARRIERS OR OTHER APPROVED METHOD) TO BE INSTALLED TO ALLOW WORK TO TAKE PLACE IN DRY CONDITIONS. IT IS RECOMMENDED THAT ONE HALF OF THE CROSSING WORK BE COMPLETED, AND THE COFFERDAM RELOCATED TO THE OTHER SIDE FOR THE REMAINDER OF THE CROSSING WORK TO MAINTAIN FLOW IN THE BROOK.
3. STREAM COBBLES/STONES/BOULDERS TO BE RELACED OVER PIPE TO PREVENT SCOUR.
4. STONE FILL TO BE PLACED AS SHOWN ON THIS PLAN TO PROTECT DISTURBED STREAM BANKS. ALL AREAS OF STREAM BANK DISTURBANCE SHALL BE SUITABLY RESHAPED AND STABILIZED WITH STONE FILL AND VEGETATIVE PLANTING PRIOR TO COMPLETION OF WORK. EXTENT OF STREAM BANK DISTURBANCE SHALL BE STRICTLY LIMITED TO THE MINIMUM NECESSARY FOR THE WORK. MAINTAIN ALL ESTABLISHED VEGETATION POSSIBLE.

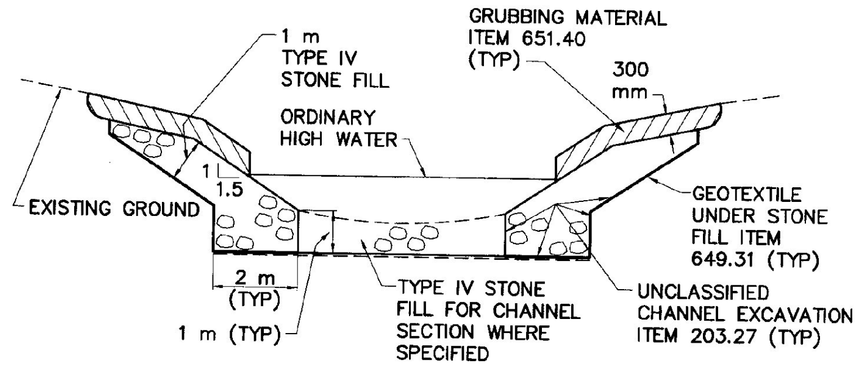

TYPICAL CHANNEL SECTION (TYPE IV STONE FILL)

NOT TO SCALE

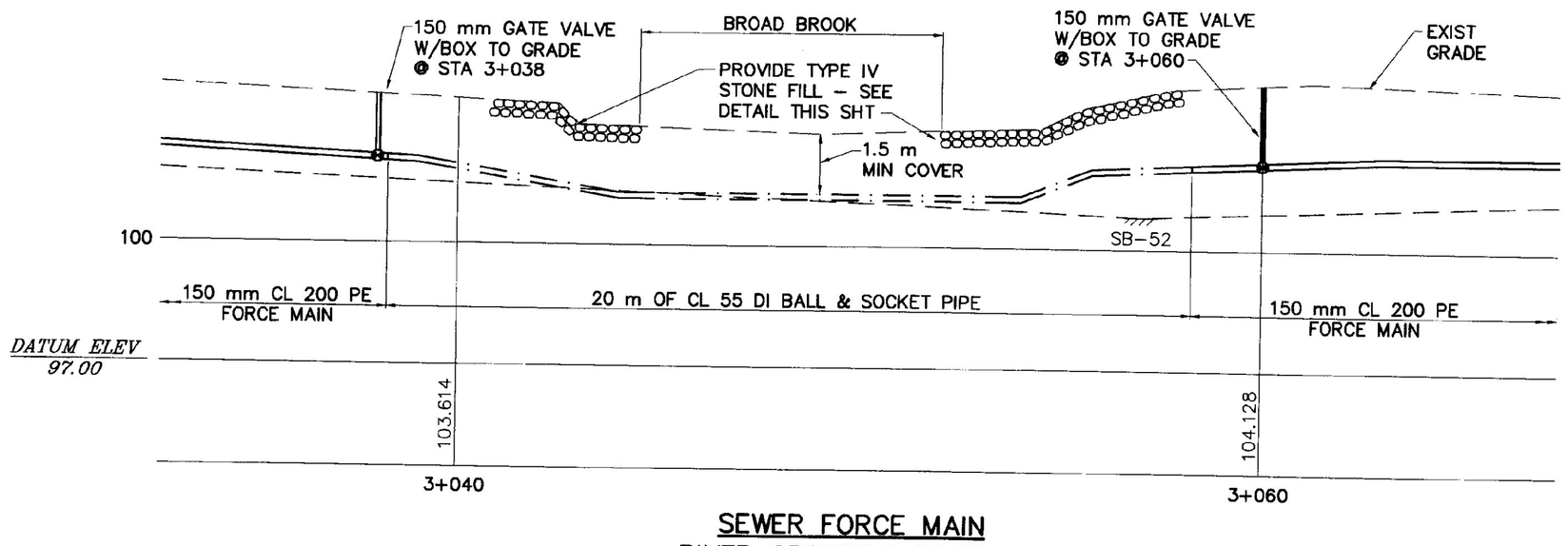

SEWER FORCE MAIN
RIVER CROSSING PROFILE

SCALE: 1:100

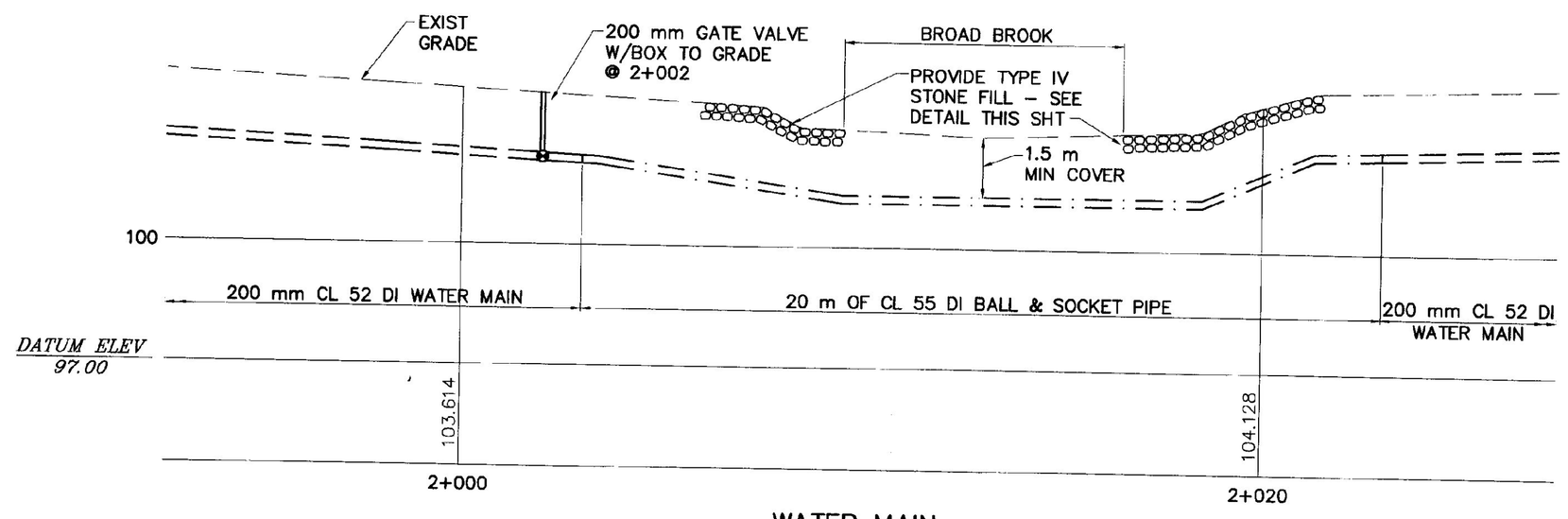

WATER MAIN
RIVER CROSSING PROFILE

SCALE: 1:100

VAOT Metric

NO.	DATE	REVISIONS	DRWN	CHKD
5	9/30/98	AS-BUILT INFORMATION ADDED	DSM	KAS
4	12/26/96	CONTRACT PLANS	DSM	MPY
3	11/11/96	FINAL REVIEW REVISIONS	DSM	MPY
2	6/4/96	REVISIONS PER REVIEW COMMENTS	DSM	MPY
1	4/8/96	REVISIONS PER REVIEW COMMENTS	DSM	MPY

TIMOTHY D. SMITH & ASSOCIATES, PC ARCHITECTS
OLD RAILROAD STATION
802-442-8184
NORTH BENNINGTON, VERMONT 05257
FAX 802-442-5241

WRIGHT ENGINEERING, LTD. CIVIL ENGINEERS
128 MERCHANTS ROW - P.O. BOX 176
802-775-2541
RUTLAND, VERMONT 05702-0176
FAX 802-775-8915

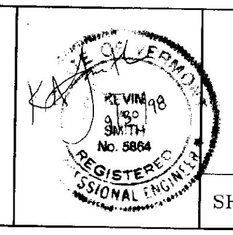

PROJECT NO.IM 091-1 (29)
WATER & SEWER EXTENSION PROJECT
TOWN OF GUILFORD
TOWN OF BRATTLEBORO

SHEET TITLE: RIVER CROSSING PLAN, PROFILES AND DETAILS

DSGN BY: JAC
DRWN BY: DSM
CHKD BY: JAC
CHKD BY: MPY

STATE OF VERMONT
AGENCY OF TRANSPORTATION
SOUTHEAST VERMONT WELCOME CENTER
GUILFORD, VERMONT

DATE: 1-2-96
SHEET NO. 20 OF 55 SHEETS

C:\ACAD12\SOU1\95C20AB Thu Oct 8 15:24:16 1998

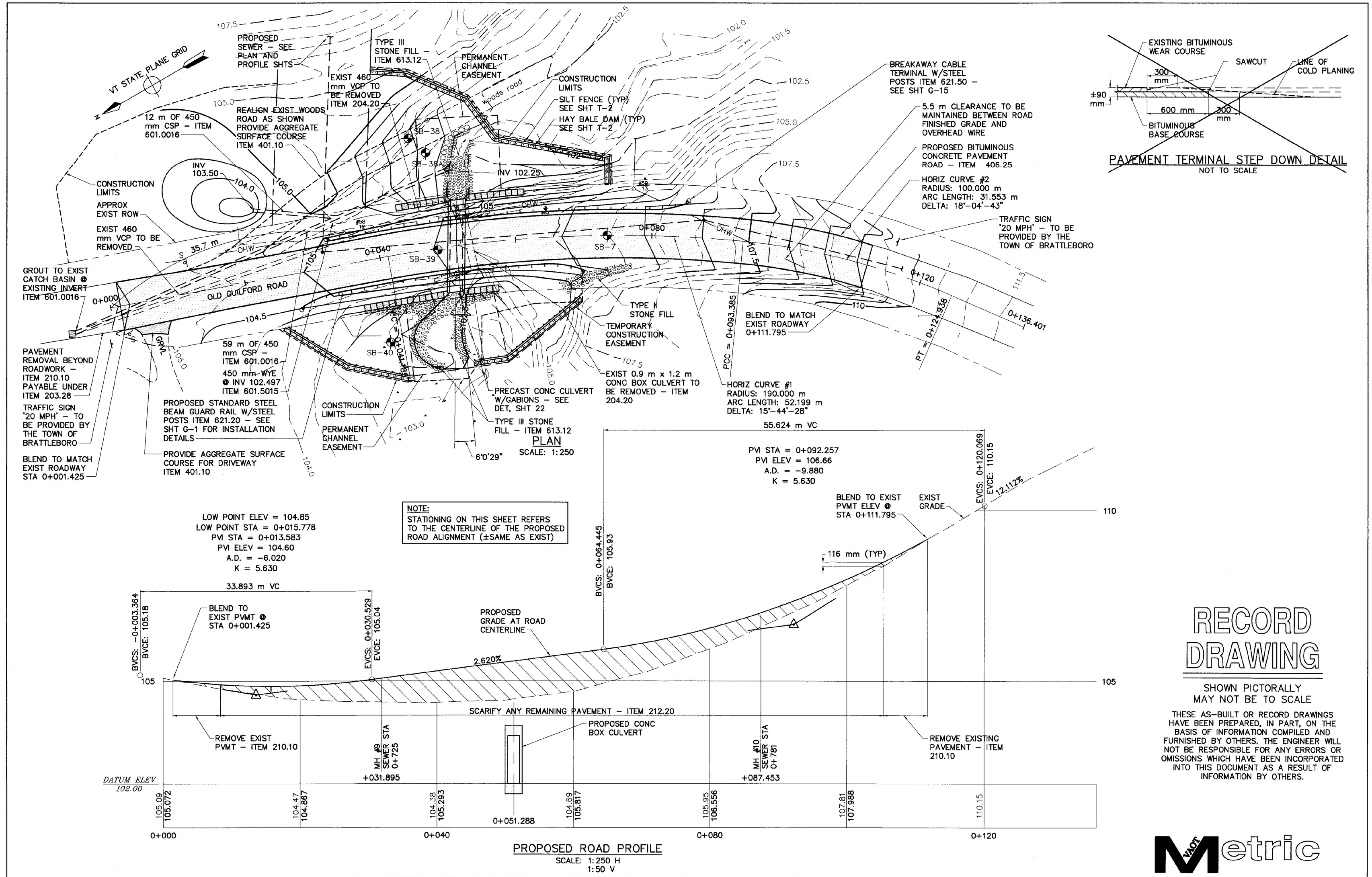

PAVEMENT TERMINAL STEP DOWN DETAIL
NOT TO SCALE

NOTE:
STATIONING ON THIS SHEET REFERS TO THE CENTERLINE OF THE PROPOSED ROAD ALIGNMENT (±SAME AS EXIST)

PROPOSED ROAD PROFILE
SCALE: 1:250 H
1:50 V

RECORD DRAWING

SHOWN PICTORALLY
MAY NOT BE TO SCALE

THESE AS-BUILT OR RECORD DRAWINGS HAVE BEEN PREPARED, IN PART, ON THE BASIS OF INFORMATION COMPILED AND FURNISHED BY OTHERS. THE ENGINEER WILL NOT BE RESPONSIBLE FOR ANY ERRORS OR OMISSIONS WHICH HAVE BEEN INCORPORATED INTO THIS DOCUMENT AS A RESULT OF INFORMATION BY OTHERS.

VAOT Metric

NO.	DATE	REVISIONS	DRWN	CHKD
5	9/30/98	AS-BUILT INFORMATION ADDED	DSM	KAS
4	12/26/96	CONTRACT PLANS	DSM	MPY
3	11/11/96	FINAL REVIEW REVISIONS	DSM	MPY
2	6/4/96	REVISIONS PER REVIEW COMMENTS	DSM	MPY
1	4/8/96	REVISIONS PER REVIEW COMMENTS	DSM	MPY

TIMOTHY D. SMITH & ASSOCIATES, PC ARCHITECTS
OLD RAILROAD STATION NORTH BENNINGTON, VERMONT 05257
802-442-8184 FAX 802-442-5241
WRIGHT ENGINEERING, LTD. CIVIL ENGINEERS
128 MERCHANTS ROW – P.O. BOX 176 RUTLAND, VERMONT 05702-0176
802-775-2511 FAX 802-775-8915

PROJECT NO.IM 091-1 (29)
WATER & SEWER EXTENSION PROJECT
TOWN OF GUILFORD
TOWN OF BRATTLEBORO

SHEET TITLE: OLD GUILFORD ROAD REALIGNMENT

DSGN BY: KAS
DRWN BY: DSM
CHKD BY: KAS
CHKD BY: MPY

STATE OF VERMONT
AGENCY OF TRANSPORTATION
SOUTHEAST VERMONT WELCOME CENTER
GUILFORD, VERMONT

DATE: 1-2-96 SHEET NO. 21 OF 55 SHEETS

C:\ACAD12\DSD1\95012148 Thu Oct 8 15:25:31 1998

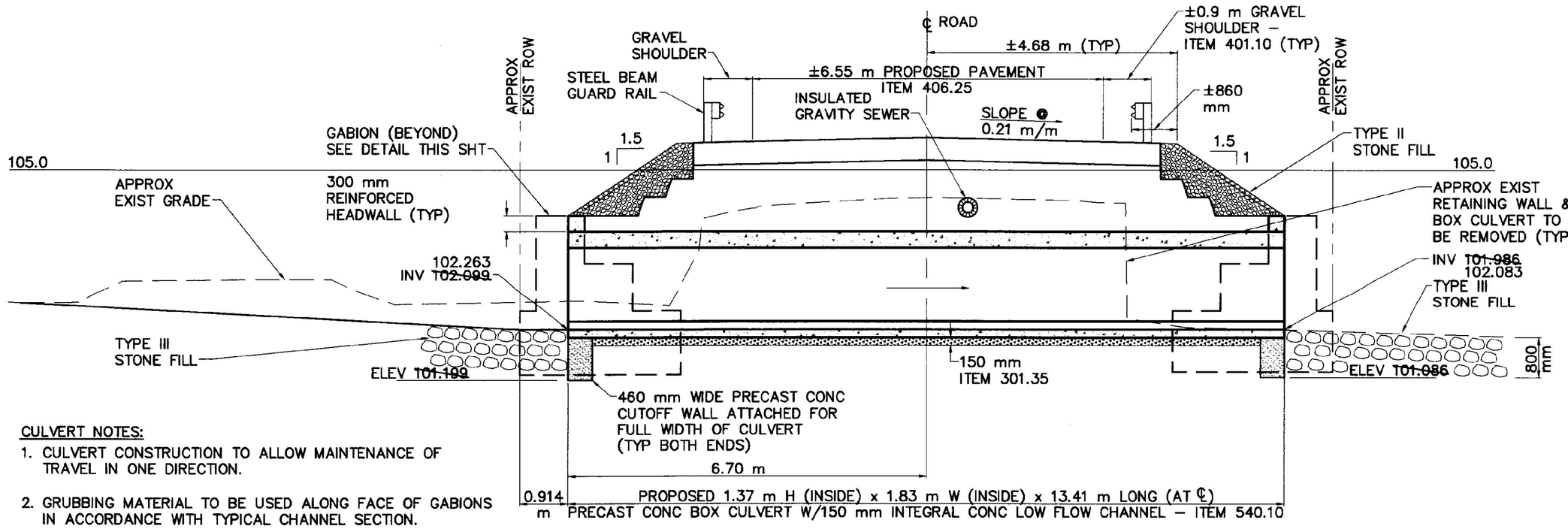

BOX CULVERT LONGITUDINAL SECTION

SCALE: 1:60

CULVERT NOTES:

1. CULVERT CONSTRUCTION TO ALLOW MAINTENANCE OF TRAVEL IN ONE DIRECTION.
2. GRUBBING MATERIAL TO BE USED ALONG FACE OF GABIONS IN ACCORDANCE WITH TYPICAL CHANNEL SECTION.
3. APPROX OPEN END AREA W/LOW FLOW CHANNEL = 2.55 m^2.
4. LIVE LOAD: HS 20–44.
5. CULVERT TO BE DESIGNED BY MANUFACTURER BASED ON GEOMETRY, LOCATION AND LOADING REQUIREMENTS PROVIDED.

RECORD DRAWING

SHOWN PICTORALLY
MAY NOT BE TO SCALE

THESE AS–BUILT OR RECORD DRAWINGS HAVE BEEN PREPARED, IN PART, ON THE BASIS OF INFORMATION COMPILED AND FURNISHED BY OTHERS. THE ENGINEER WILL NOT BE RESPONSIBLE FOR ANY ERRORS OR OMISSIONS WHICH HAVE BEEN INCORPORATED INTO THIS DOCUMENT AS A RESULT OF INFORMATION BY OTHERS.

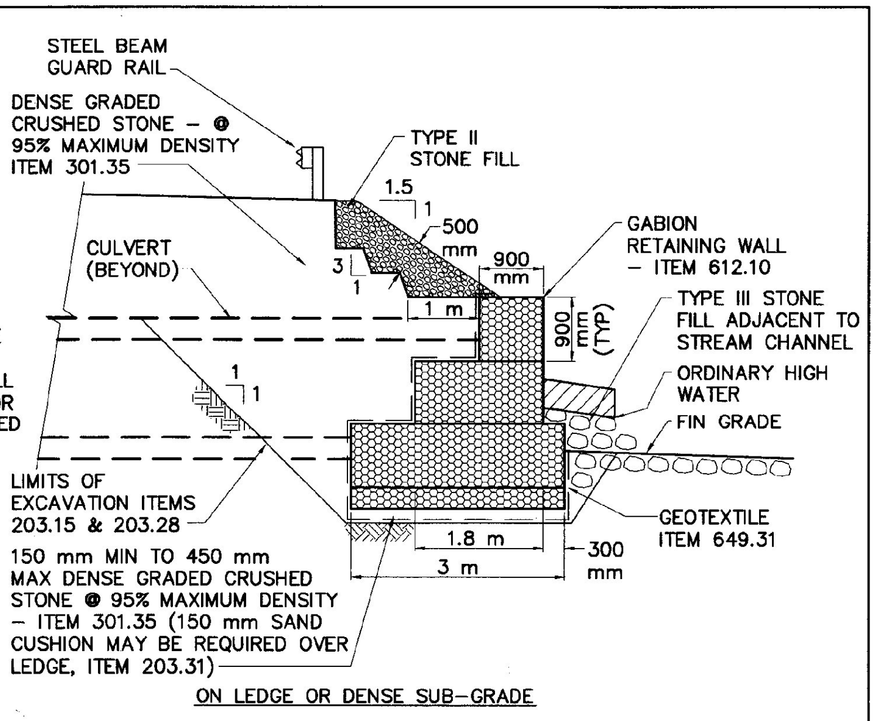

ON LEDGE OR DENSE SUB–GRADE

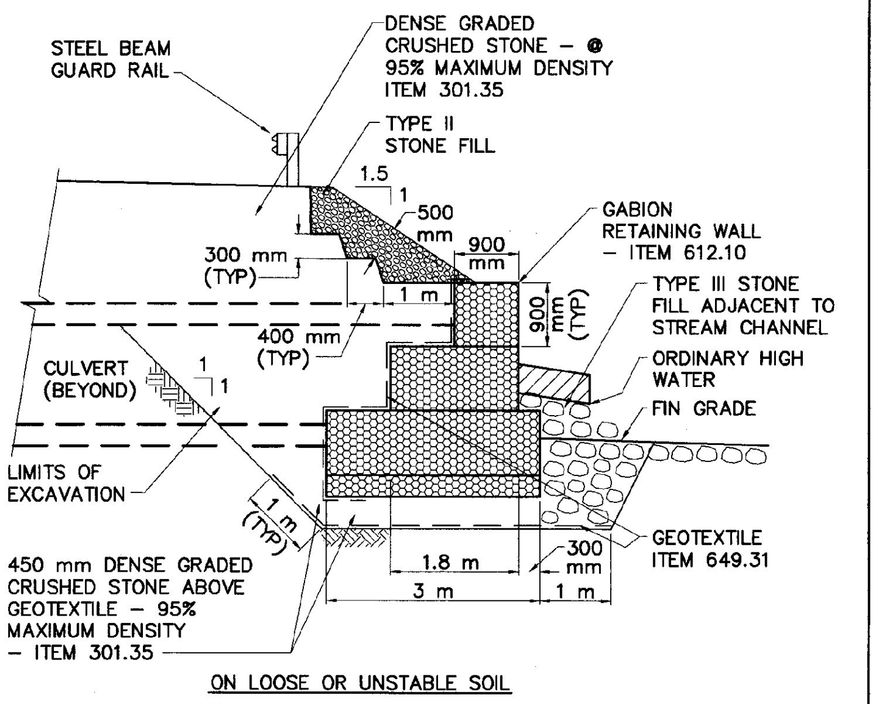

ON LOOSE OR UNSTABLE SOIL

GABION RETAINING WALL DETAILS

SCALE: 1:60

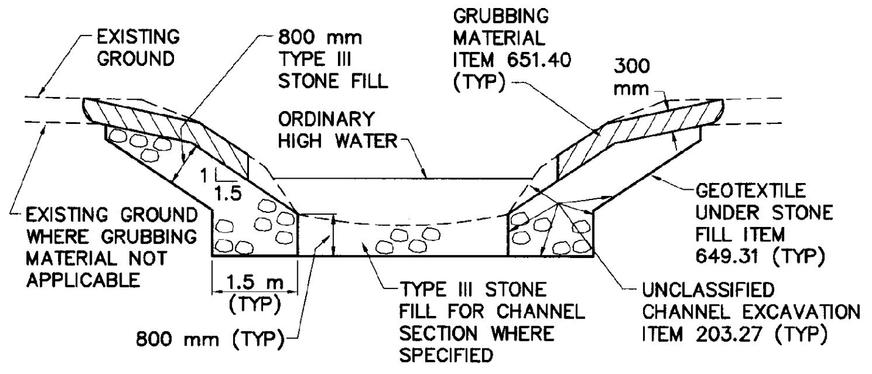

TYPICAL CHANNEL SECTION (TYPE III STONE FILL)

NOT TO SCALE

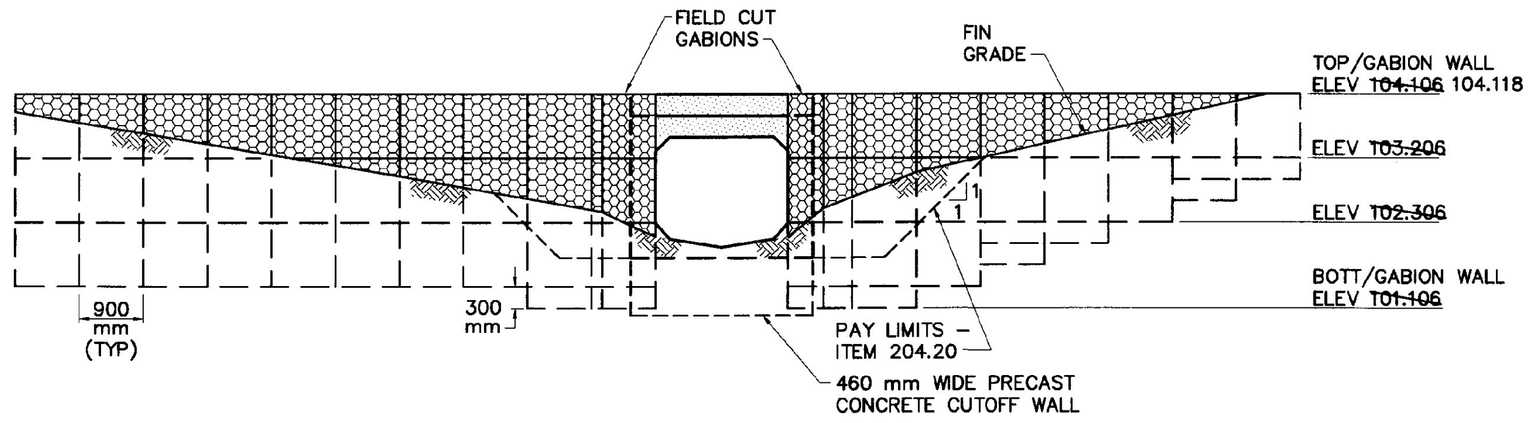

CULVERT/GABION END ELEVATION (OUTLET)

SCALE: 1:60

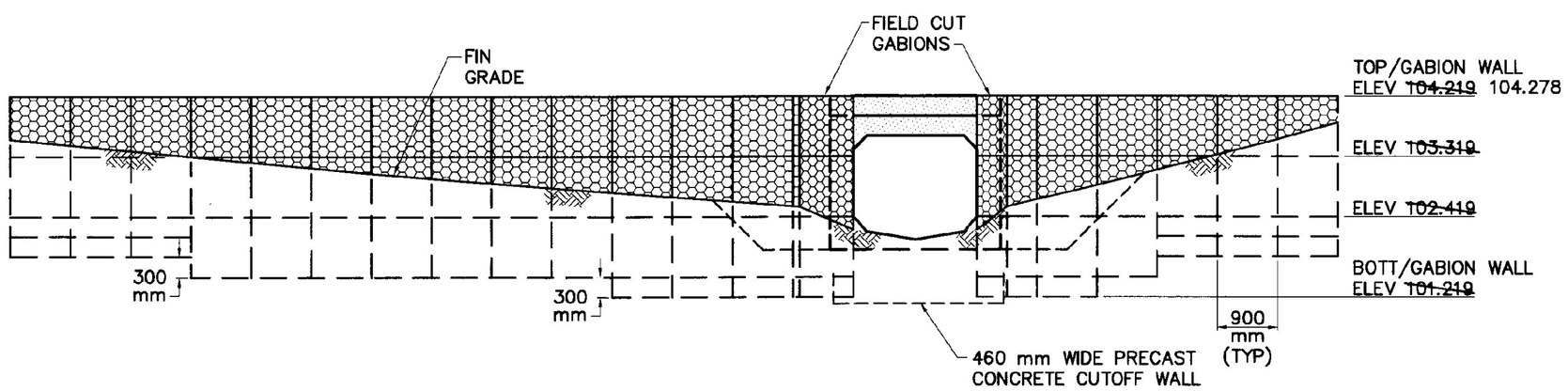

CULVERT/GABION END ELEVATION (INLET)

SCALE: 1:60

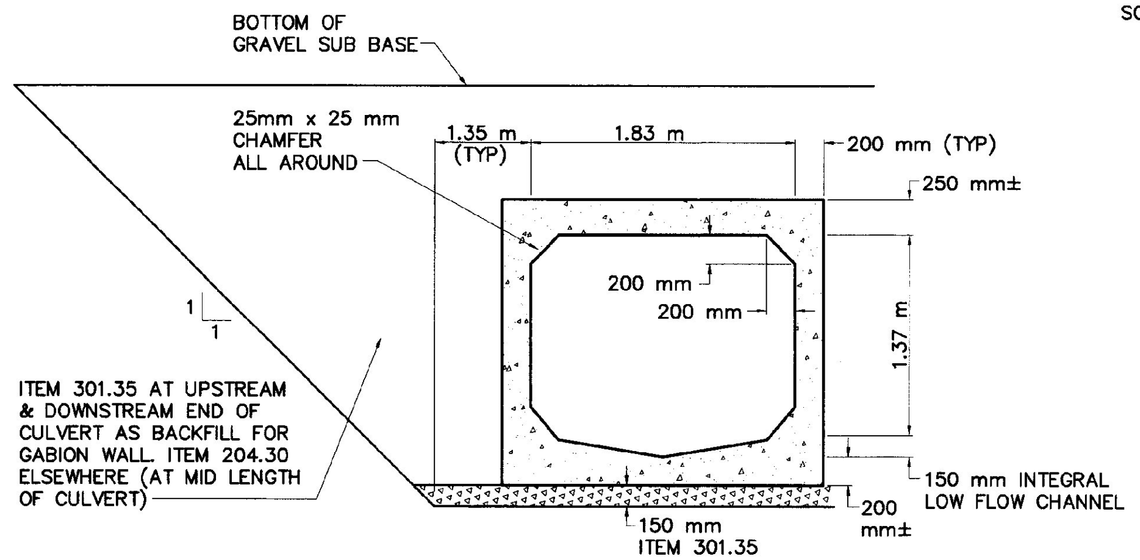

CULVERT CROSS SECTION

NOT TO SCALE

GABION WALL BASIS OF DESIGN

SUBGRADE PHI: 30° MINIMUM (ASSUMED)

FACTORS OF SAFETY:
- OVERTURNING ≥ 2.0
- SLIDING ≥ 1.5
- BEARING ≥ 2.0

UNTI WEIGHT:
- GABION FILL: 1760 kg/m^3
- BACKFILL: 2160 kg/m^3
- SUBGRADE: 1600 kg/m^3

DENSE GRADED CRUSHED STONE BACKFILL CHARACTERISTICS:
- PHI : 40°
- Cu ≥ 4
- 1 ≤ C ≤ 3

LOADINGS TO INCLUDE TRAFFIC SURCHARGE

VAOT Metric

NO.	DATE	REVISIONS	DRWN	CHKD
5	9/30/98	AS–BUILT INFORMATION ADDED	DSM	KAS
4	12/26/96	CONTRACT PLANS	DSM	MPY
3	11/11/96	FINAL REVIEW REVISIONS	DSM	MPY
2	6/4/96	REVISIONS PER REVIEW COMMENTS	DSM	MPY
1	4/8/96	REVISIONS PER REVIEW COMMENTS	DSM	MPY

TIMOTHY D. SMITH & ASSOCIATES, PC ARCHITECTS
OLD RAILROAD STATION, NORTH BENNINGTON, VERMONT 05257
802–442–8184 FAX 802–442–5241
WRIGHT ENGINEERING, LTD. CIVIL ENGINEERS
128 MERCHANTS ROW – P.O. BOX 176, RUTLAND, VERMONT 05702–0176
802–775–2511 FAX 802–775–8915

STATE OF VERMONT — KEVIN B. SMITH No. 5864 — REGISTERED PROFESSIONAL ENGINEER

PROJECT NO.IM 091–1 (29)
WATER & SEWER EXTENSION PROJECT
TOWN OF GUILFORD
TOWN OF BRATTLEBORO

SHEET TITLE: BOX CULVERT AND GABION DETAILS

DSGN BY: KAS
DRWN BY: DSM
CHKD BY: KAS
CHKD BY: MPY

STATE OF VERMONT
AGENCY OF TRANSPORTATION
SOUTHEAST VERMONT WELCOME CENTER
GUILFORD, VERMONT

DATE: 1–2–96 SHEET NO. 22 OF 55 SHEETS

C:\ACAD12\S01\S02122AB Thu Oct 0 15:26:38 1998

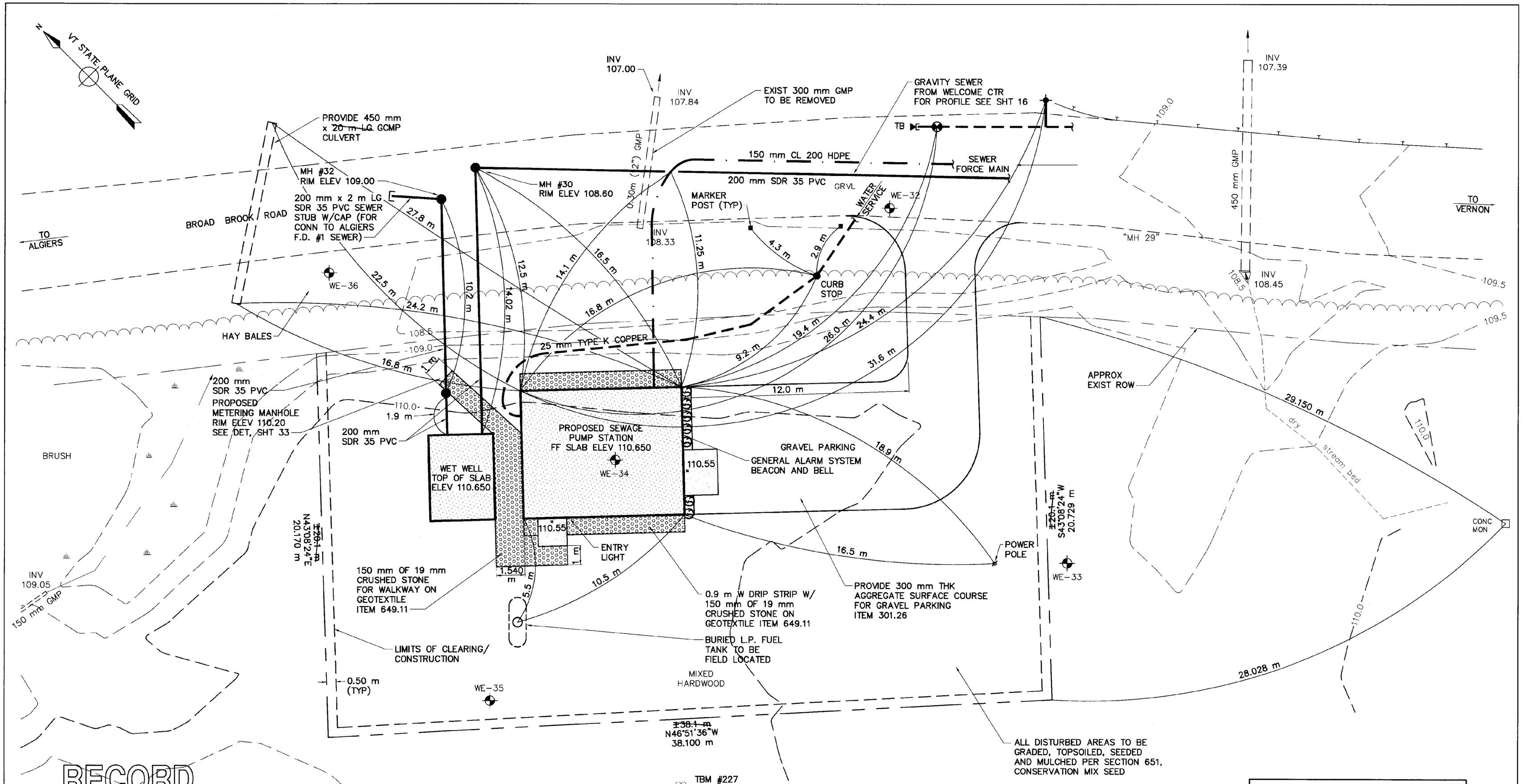

RECORD DRAWING

SHOWN PICTORALLY
MAY NOT BE TO SCALE

THESE AS-BUILT OR RECORD DRAWINGS HAVE BEEN PREPARED, IN PART, ON THE BASIS OF INFORMATION COMPILED AND FURNISHED BY OTHERS. THE ENGINEER WILL NOT BE RESPONSIBLE FOR ANY ERRORS OR OMISSIONS WHICH HAVE BEEN INCORPORATED INTO THIS DOCUMENT AS A RESULT OF INFORMATION BY OTHERS.

PUMP STATION SITE PLAN

SCALE: 1:100

SOIL CONSERVATION MIX	PERCENT OF MIX	kg/ha
CREEPING RED FESCUE	35%	
REDTOP	6%	
KENTUCKY BLUEGRASS	24%	18-20
PERENNIAL RYEGRASS	18%	
ANNUAL RYEGRASS	12%	
WHITE CLOVER	5%	

LANDSCAPING LEGEND		
	15	FIELD COLLECTED MIXED PINE & HEMLOCK HT. 75% 2.5 m - 3 m 25% 1.2 m - 3 m
	15	MIXED YELLOW DAYLILY

VAOT Metric

NO.	DATE	REVISIONS	DRWN	CHKD
5	9/30/98	AS-BUILT INFORMATION ADDED	DSM	KAS
4	12/26/96	CONTRACT PLANS	DSM	MPY
3	11/11/96	FINAL REVIEW REVISIONS	DSM	MPY
2	6/4/96	REVISIONS PER REVIEW COMMENTS	DSM	MPY
1	4/8/96	REVISIONS PER REVIEW COMMENTS	DSM	MPY

TIMOTHY D. SMITH & ASSOCIATES, PC ARCHITECTS
OLD RAILROAD STATION, NORTH BENNINGTON, VERMONT 05257
802-442-8184 FAX 802-442-5241

WRIGHT ENGINEERING, LTD. CIVIL ENGINEERS
128 MERCHANTS ROW - P.O. BOX 176, RUTLAND, VERMONT 05702-0176
802-775-2511 FAX 802-775-8915

STATE OF VERMONT REGISTERED PROFESSIONAL ENGINEER KEVIN D. SMITH No. 5864

PROJECT NO.IM 091-1 (29)
WATER & SEWER EXTENSION PROJECT
TOWN OF GUILFORD
TOWN OF BRATTLEBORO

SHEET TITLE: PUMP STATION SITE PLAN

DSGN BY: JAC
DRWN BY: DSM
CHKD BY: JAC
CHKD BY: MPY

STATE OF VERMONT
AGENCY OF TRANSPORTATION
SOUTHEAST VERMONT WELCOME CENTER
GUILFORD, VERMONT

DATE: 1-2-96 SHEET NO. 23 OF 55 SHEETS

C:\ACAD12\SD91\SD91234B Thu Oct 8 15:35:57 1998

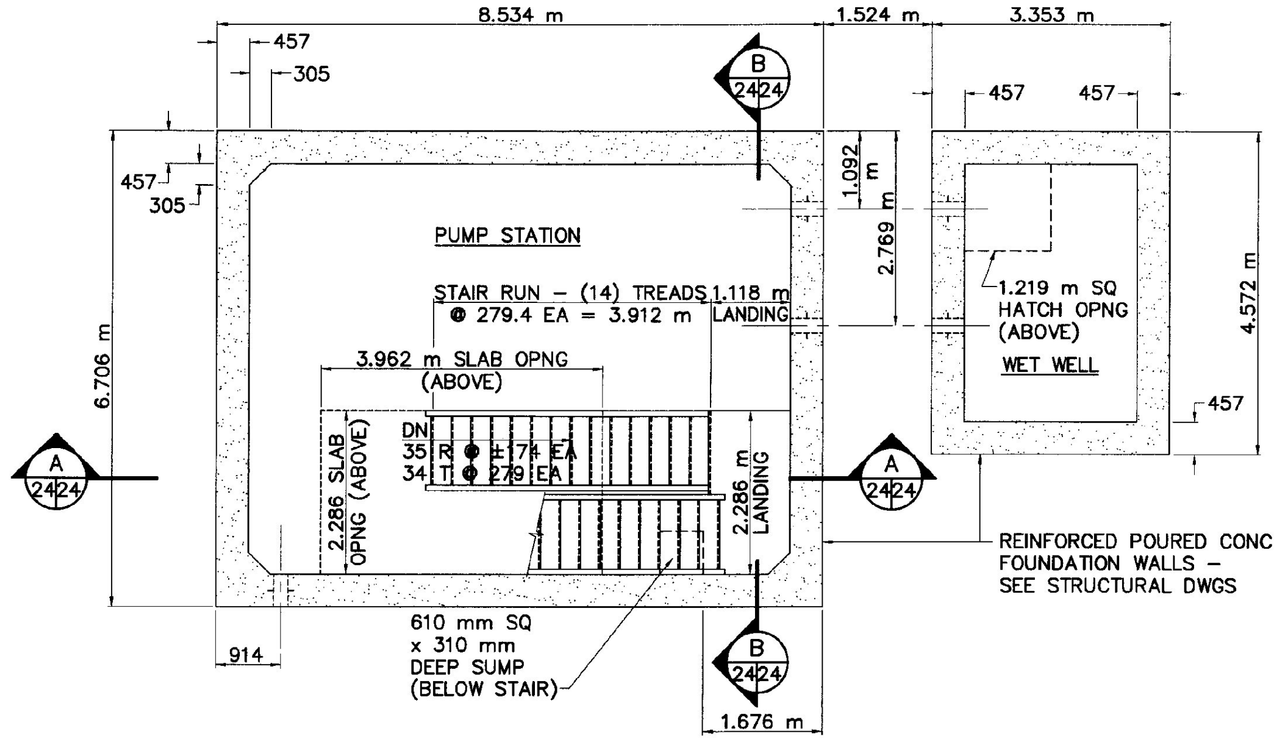

BASEMENT PLAN
SCALE: 1:60

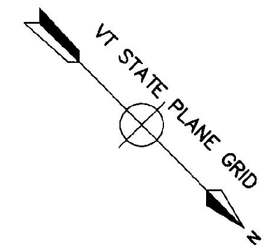

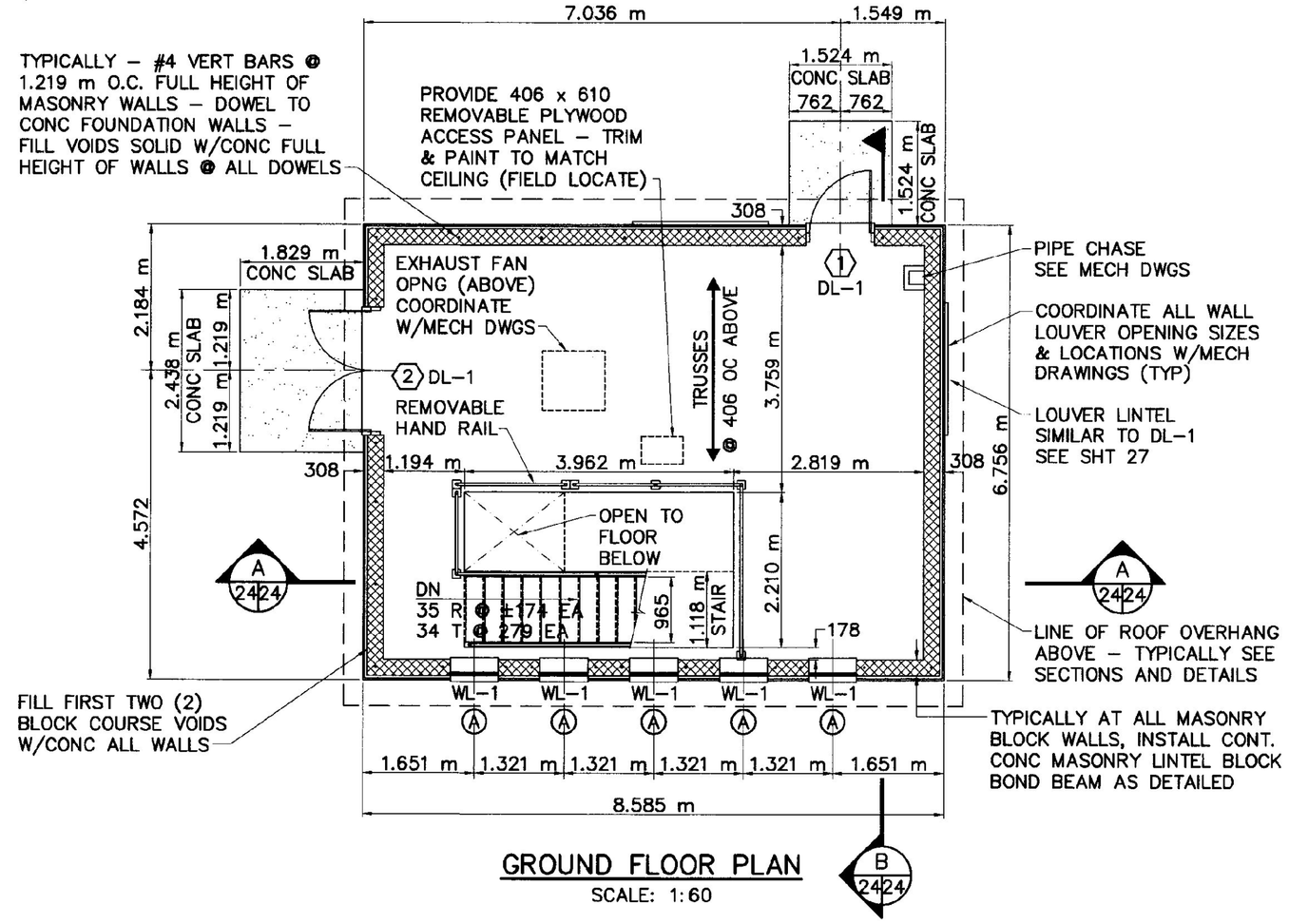

GROUND FLOOR PLAN
SCALE: 1:60

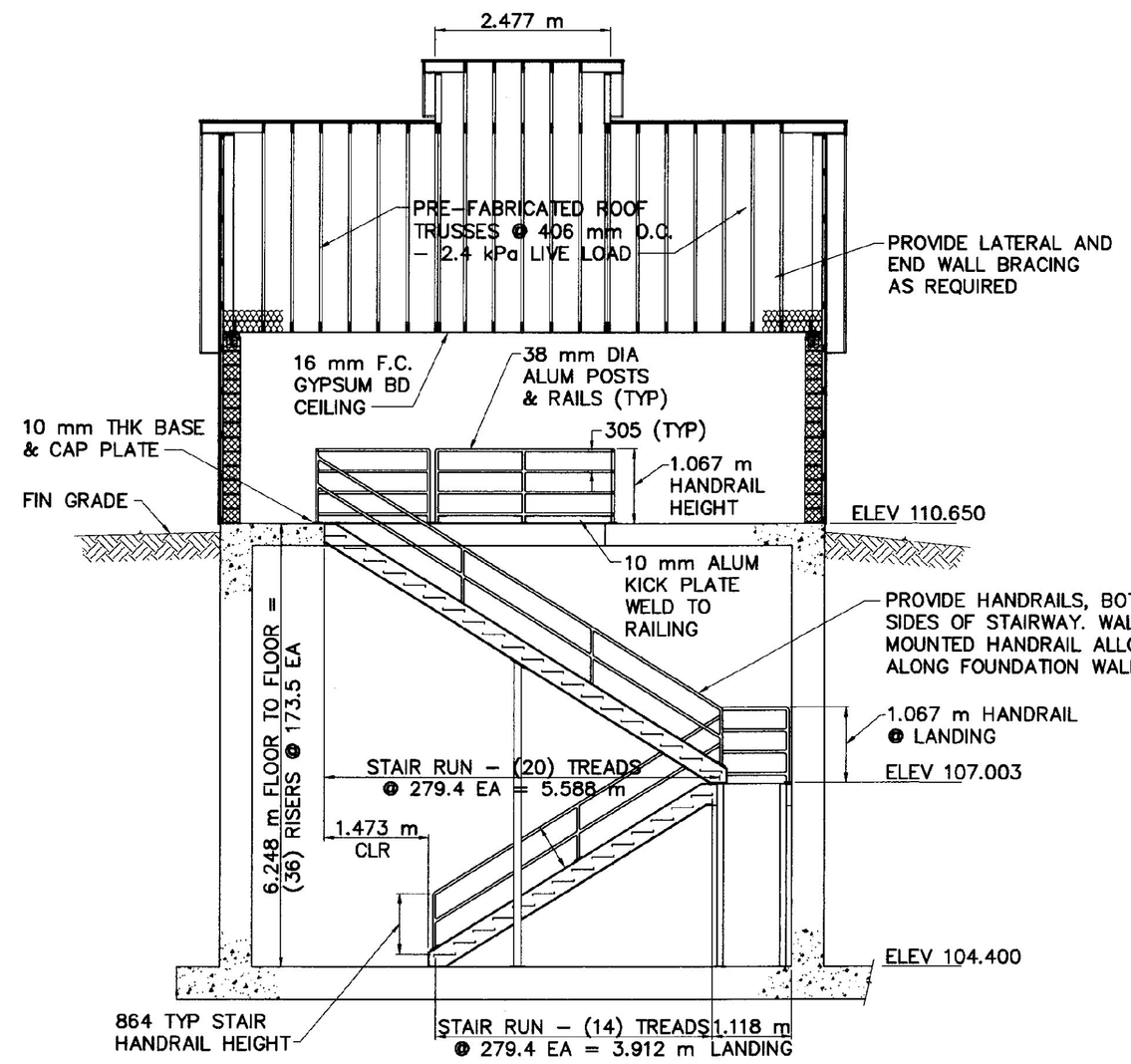

LONGITUDINAL SECTION A 2424
SCALE: 1:60

NOTE:
STAIRWAY AND HANDRAILS TO MEET ALL APPLICABLE BOCA CODE REQUIREMENTS

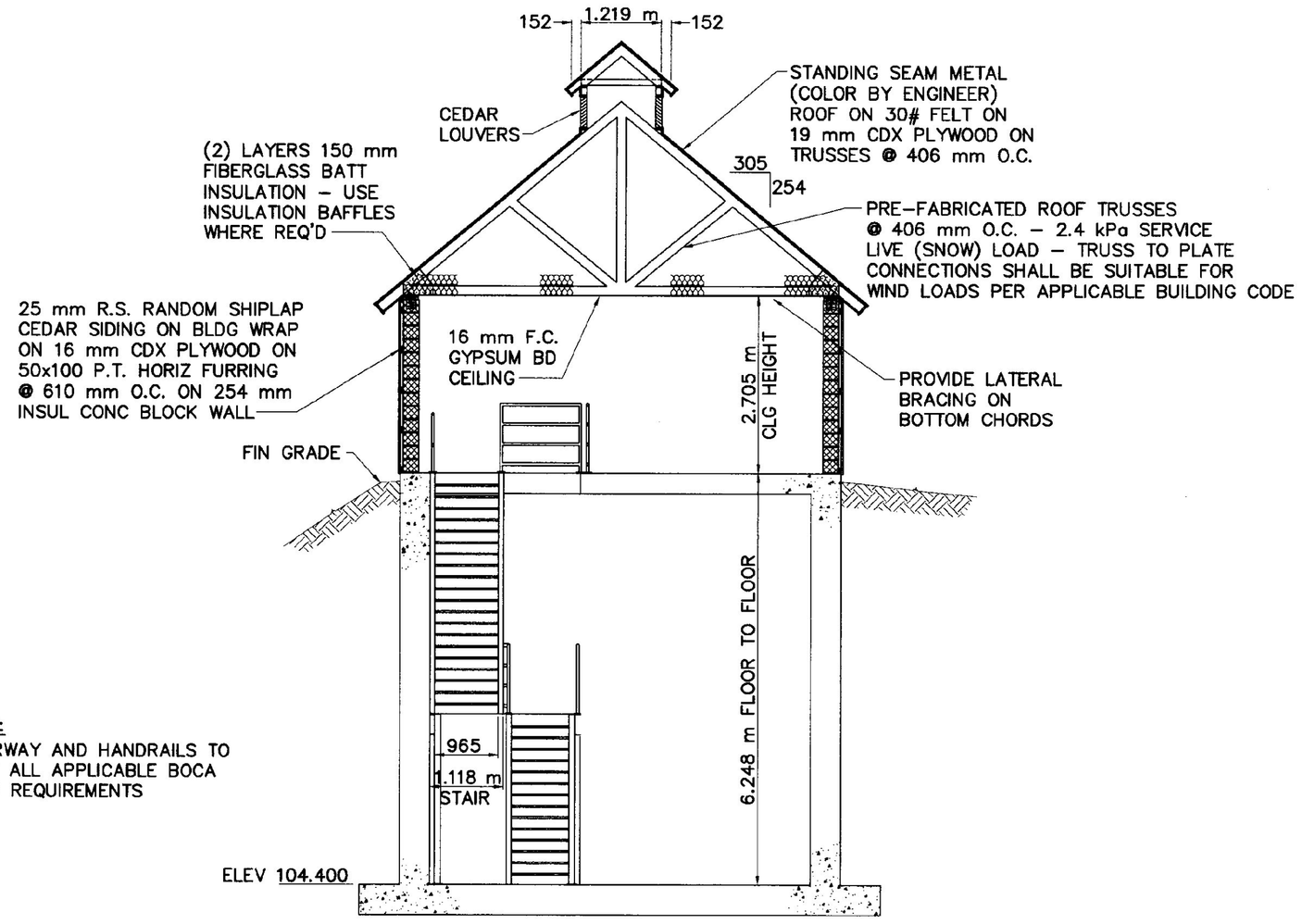

CROSS SECTION B 2424
SCALE: 1:60

RECORD DRAWING

SHOWN PICTORALLY
MAY NOT BE TO SCALE

THESE AS–BUILT OR RECORD DRAWINGS HAVE BEEN PREPARED, IN PART, ON THE BASIS OF INFORMATION COMPILED AND FURNISHED BY OTHERS. THE ENGINEER WILL NOT BE RESPONSIBLE FOR ANY ERRORS OR OMISSIONS WHICH HAVE BEEN INCORPORATED INTO THIS DOCUMENT AS A RESULT OF INFORMATION BY OTHERS.

NOTE:
UNLESS OTHERWISE LABELLED, ALL DIMENSIONS ARE IN MILLIMETERS (mm).

VAOT Metric

NO.	DATE	REVISIONS	DRWN	CHKD
5	9/30/98	AS–BUILT INFORMATION ADDED	DSM	KAS
4	12/26/96	CONTRACT PLANS	DSM	MPY
3	11/11/96	FINAL REVIEW REVISIONS	DSM	MPY
2	6/4/96	REVISIONS PER REVIEW COMMENTS	DSM	MPY
1	4/8/96	REVISIONS PER REVIEW COMMENTS	DSM	MPY

TIMOTHY D. SMITH & ASSOCIATES, PC ARCHITECTS
OLD RAILROAD STATION, NORTH BENNINGTON, VERMONT 05257
802-442-8184, FAX 802-442-5241
WRIGHT ENGINEERING, LTD. CIVIL ENGINEERS
128 MERCHANTS ROW – P.O. BOX 176, RUTLAND, VERMONT 05702-0176
802-775-2511, FAX 802-775-8915

STATE OF VERMONT KEVIN A. SMITH No. 5864 REGISTERED PROFESSIONAL ENGINEER

PROJECT NO.IM 091–1 (29)
WATER & SEWER EXTENSION PROJECT
TOWN OF GUILFORD
TOWN OF BRATTLEBORO

SHEET TITLE: PUMP STATION PLANS AND SECTIONS – ARCHITECTURAL

DSGN BY: MPY
DRWN BY: DSM
CHKD BY: MPY
CHKD BY: JAC

STATE OF VERMONT
AGENCY OF TRANSPORTATION
SOUTHEAST VERMONT WELCOME CENTER
GUILFORD, VERMONT

DATE: 1–2–96
SHEET NO. 24 OF 55 SHEETS

C:\ACAD12\SS01\9501248 Thu Oct 8 15:37:11 1998

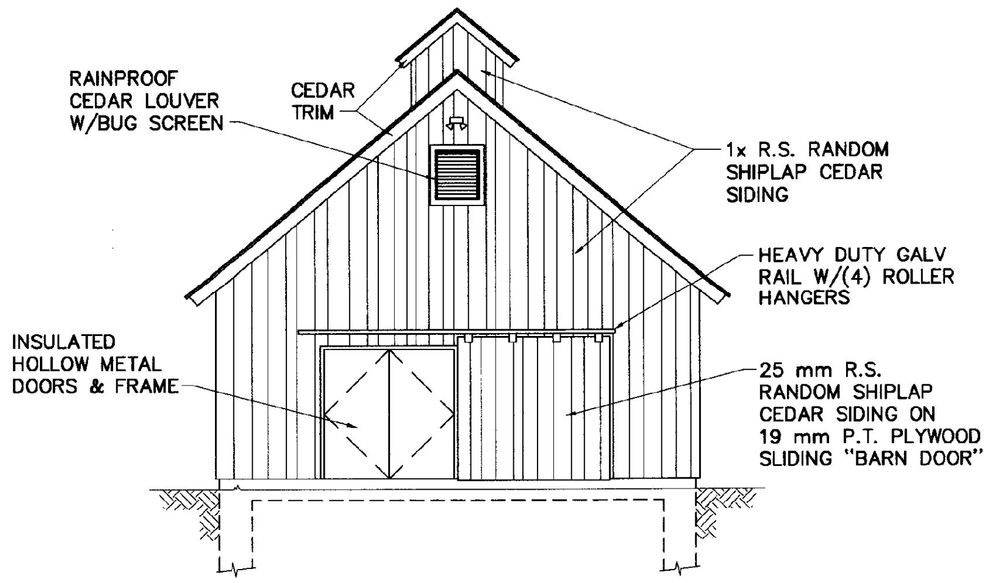

SOUTHEAST ELEVATION
SCALE: 1:60

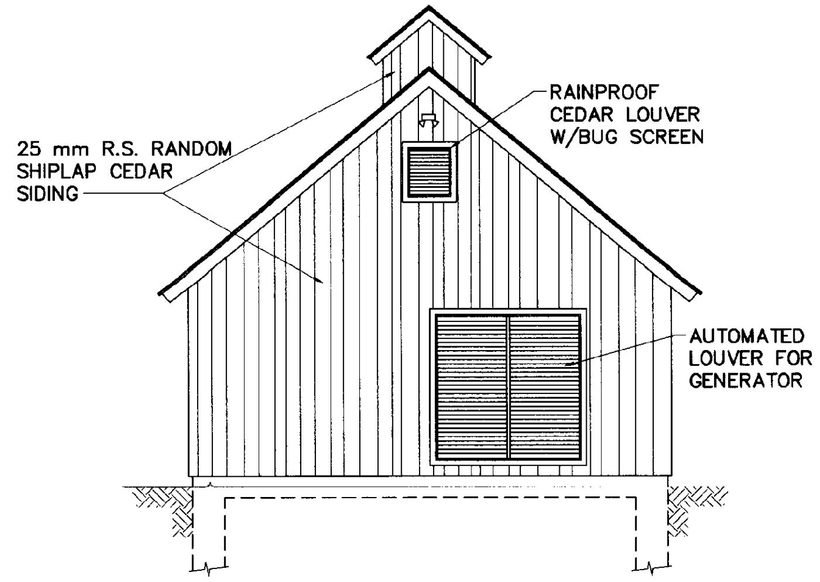

NORTHWEST ELEVATION
SCALE: 1:60

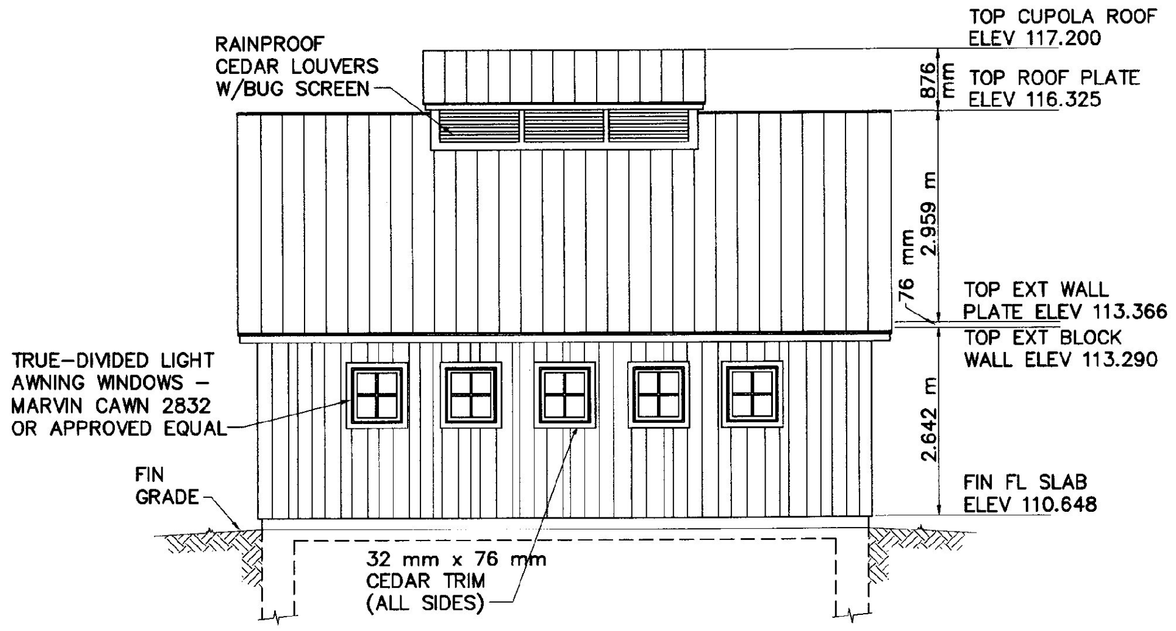

NORTHEAST ELEVATION
SCALE: 1:60

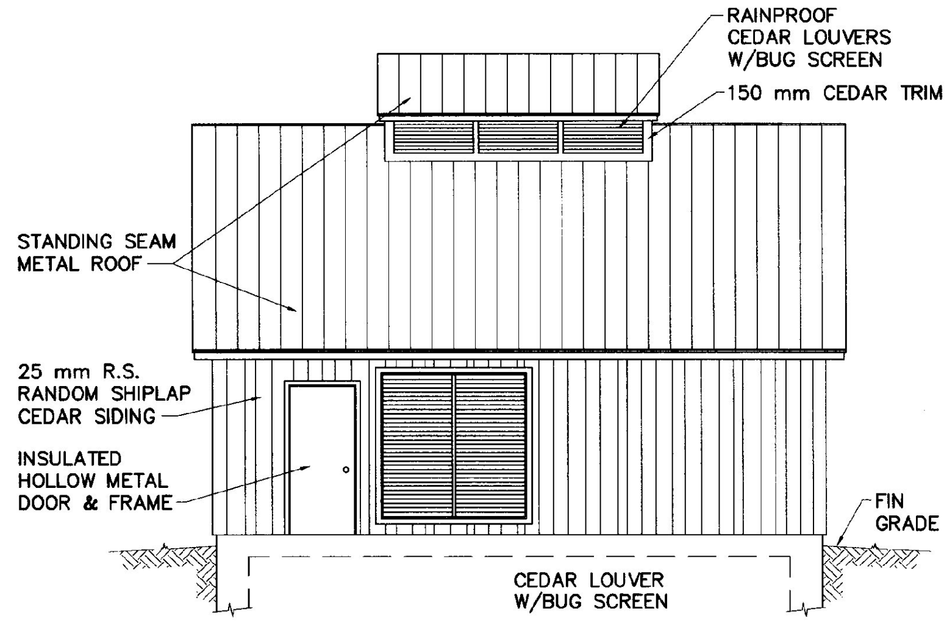

SOUTHWEST ELEVATION
SCALE: 1:60

FINISH SCHEDULE

FLOOR	FLOOR FINISH	BASE	WALLS		CEILING		DOORS		WINDOWS	
			MATERIAL	FINISH	MATERIAL	FINISH	MATERIAL	FINISH	MATERIAL	FINISH
BASEMENT	CONCRETE – EPOXY PAINT	NONE	CONCRETE	EPOXY PAINT	CONCRETE	EPOXY PAINT	–	–	–	–
FIRST FLOOR INTERIOR	CONCRETE – EPOXY PAINT	150 mm VINYL COVE BASE	CONCRETE BLOCK	EPOXY PAINT	SHEETROCK & TRIM	EPOXY PAINT	HOLLOW METAL – PRIMED	EPOXY PAINT	WOOD VINYL CLAD	EPOXY PAINT –
EXTERIOR	–	–	CEDAR	BLEACHING OIL	–	–	HOLLOW METAL – PRIMED	EPOXY PAINT	VINYL CLAD TRIM-CEDAR	BLEACHING OIL

RECORD DRAWING

SHOWN PICTORALLY
MAY NOT BE TO SCALE

THESE AS-BUILT OR RECORD DRAWINGS HAVE BEEN PREPARED, IN PART, ON THE BASIS OF INFORMATION COMPILED AND FURNISHED BY OTHERS. THE ENGINEER WILL NOT BE RESPONSIBLE FOR ANY ERRORS OR OMISSIONS WHICH HAVE BEEN INCORPORATED INTO THIS DOCUMENT AS A RESULT OF INFORMATION BY OTHERS.

VAOT Metric

NO.	DATE	REVISIONS	DRWN	CHKD
5	9/30/98	NO AS-BUILT INFORMATION ADDED	DSM	KAS
4	12/26/96	CONTRACT PLANS	DSM	MPY
3	11/11/96	FINAL REVIEW REVISIONS	DSM	MPY
2	6/4/96	REVISIONS PER REVIEW COMMENTS	DSM	MPY
1	4/8/96	REVISIONS PER REVIEW COMMENTS	DSM	MPY

TIMOTHY D. SMITH & ASSOCIATES, PC ARCHITECTS
OLD RAILROAD STATION
NORTH BENNINGTON, VERMONT 05257
802-442-8184
FAX 802-442-5241
WRIGHT ENGINEERING, LTD. CIVIL ENGINEERS
128 MERCHANTS ROW - P.O. BOX 176
RUTLAND, VERMONT 05702-0176
802-775-2511
FAX 802-775-8915

STATE OF VERMONT
KEVIN A. SMITH No. 6864 REGISTERED PROFESSIONAL ENGINEER 98

PROJECT NO.IM 091-1 (29)
WATER & SEWER EXTENSION PROJECT
TOWN OF GUILFORD
TOWN OF BRATTLEBORO

SHEET TITLE: PUMP STATION BUILDING ELEVATIONS AND FINISH SCHEDULE - ARCHITECTURAL

DSGN BY: MPY
DRWN BY: DSM
CHKD BY: MPY
CHKD BY: JAC

STATE OF VERMONT
AGENCY OF TRANSPORTATION
SOUTHEAST VERMONT WELCOME CENTER
GUILFORD, VERMONT

DATE: 1-2-96
SHEET NO. 25 OF 55 SHEETS

C:\ACAD12\PROJ\95012548 Fri Oct 9 12:35:25 1998

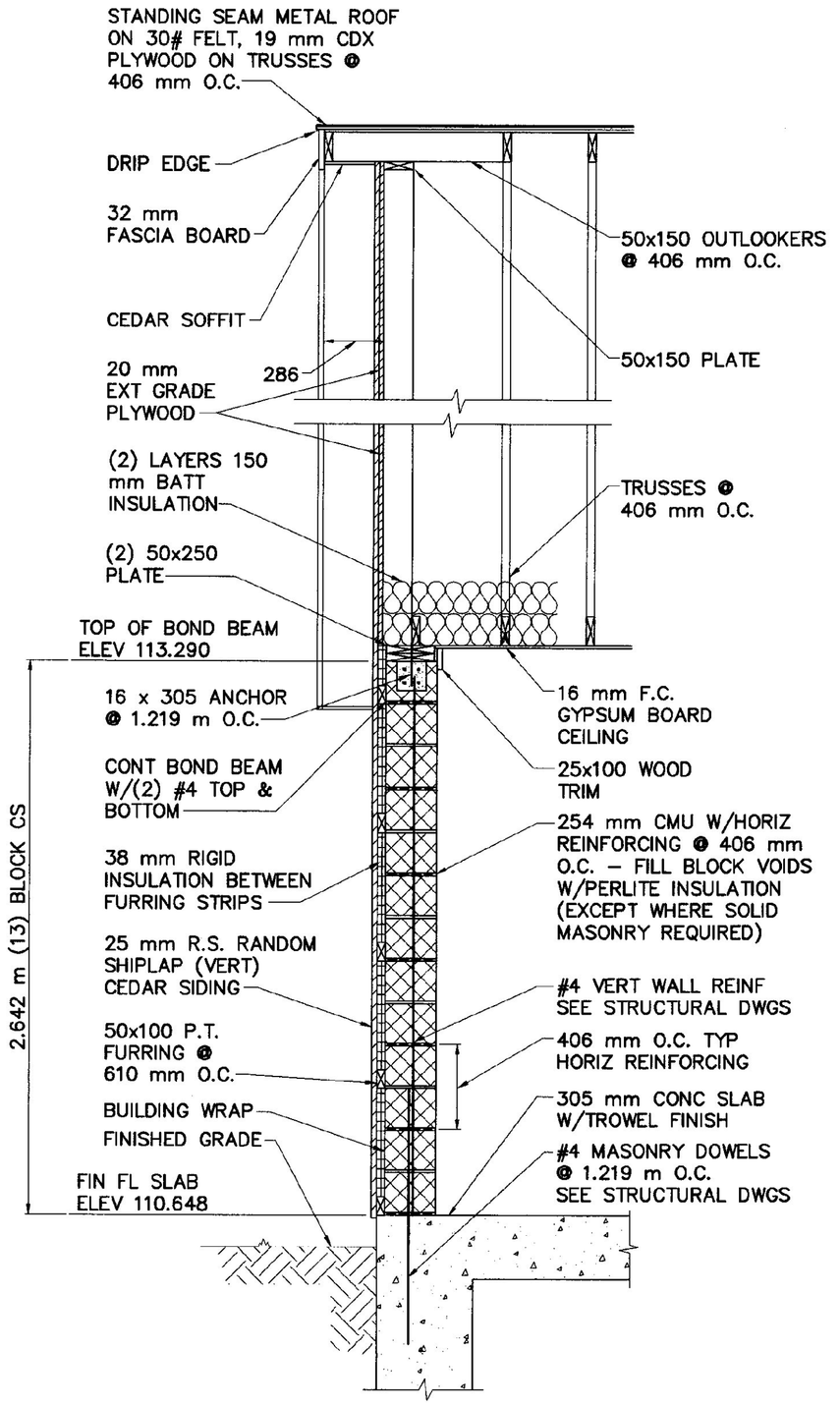

TYPICAL WALL SECTION

SCALE: 1:20

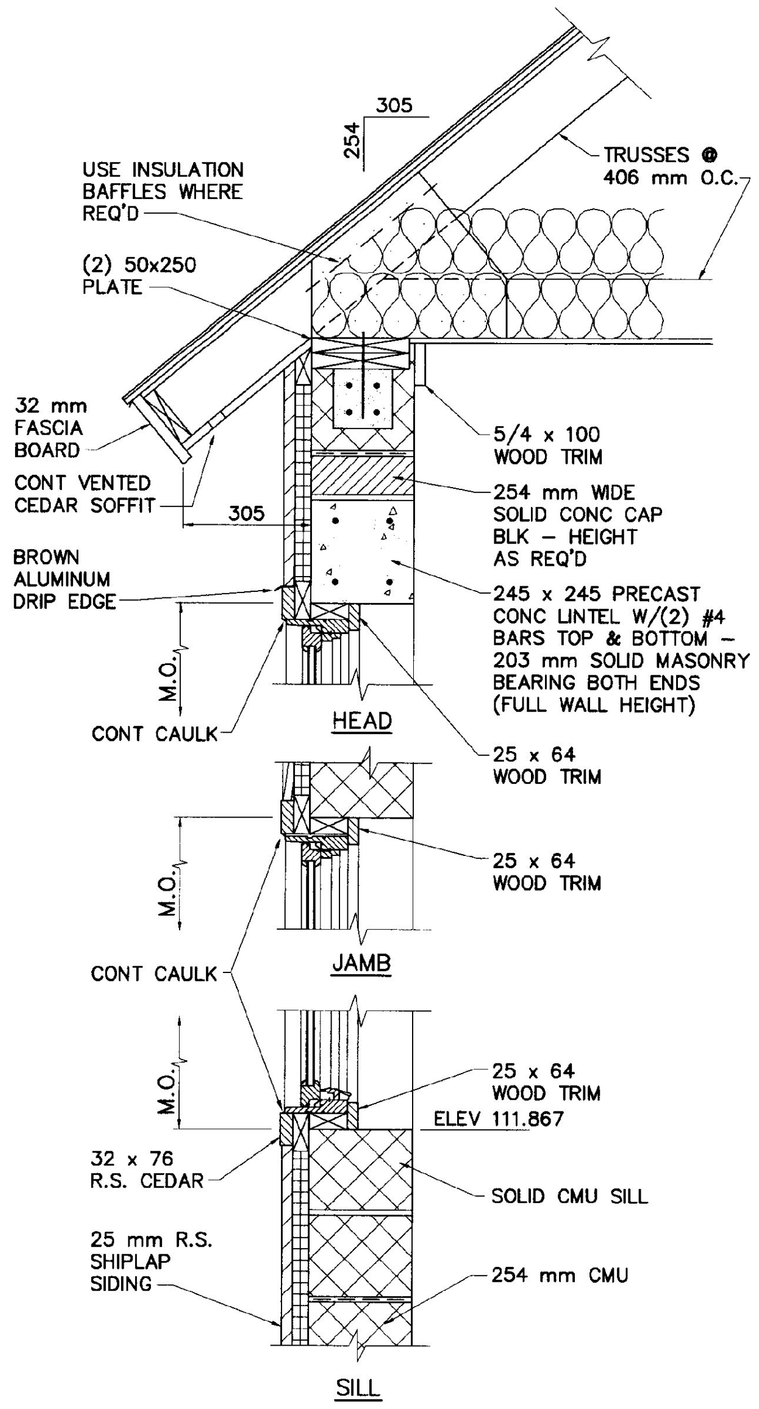

SECTION AT WINDOW

SCALE: 1:10

(WINDOW LINTEL WL-1)

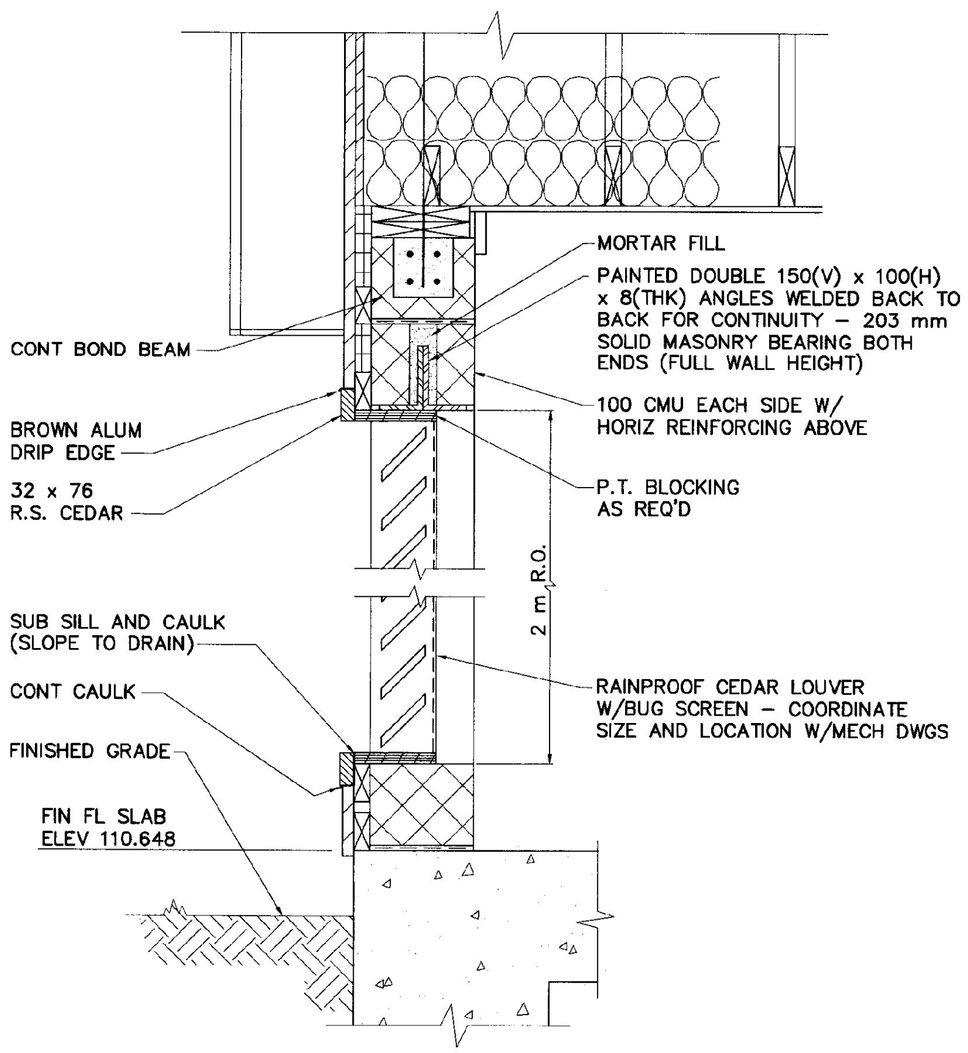

INTAKE LOUVER DETAIL

SCALE: 1:10

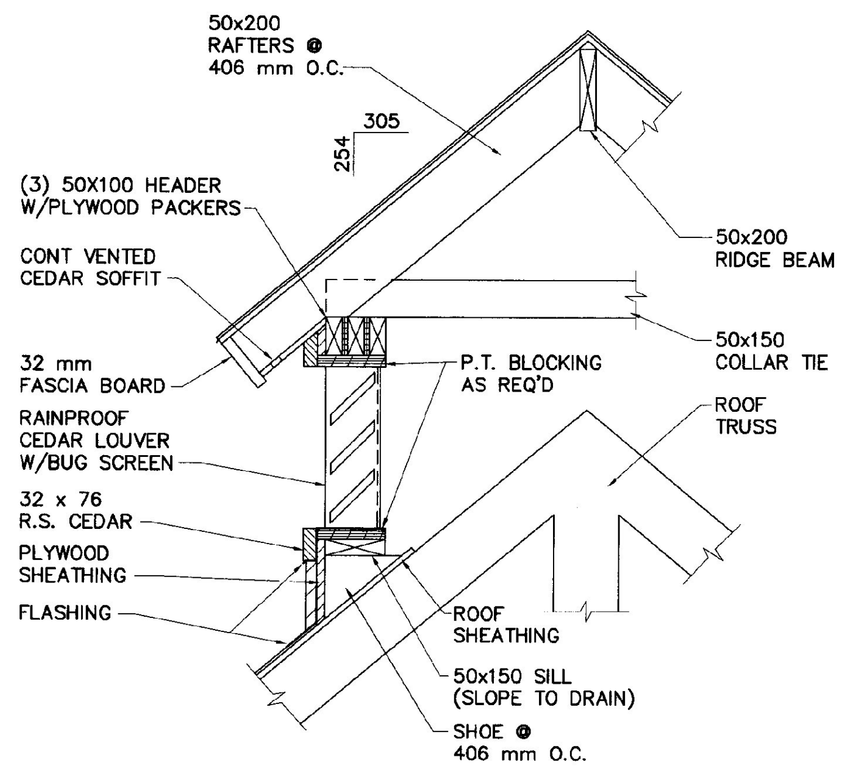

TYPICAL CUPOLA SECTION

SCALE: 1:10

WINDOW SCHEDULE

WINDOW MARK	CATALOG NUMBER	MANUFACTURER	ROUGH OPENING		FRAME MATERIAL	LINTEL MARK	REMARKS
			WIDTH	HEIGHT			
A	CAWN 2832	MARVIN	737	827	METAL CLAD	WL-1	

RECORD DRAWING

SHOWN PICTORALLY MAY NOT BE TO SCALE

THESE AS-BUILT OR RECORD DRAWINGS HAVE BEEN PREPARED, IN PART, ON THE BASIS OF INFORMATION COMPILED AND FURNISHED BY OTHERS. THE ENGINEER WILL NOT BE RESPONSIBLE FOR ANY ERRORS OR OMISSIONS WHICH HAVE BEEN INCORPORATED INTO THIS DOCUMENT AS A RESULT OF INFORMATION BY OTHERS.

VAOT Metric

NO.	DATE	REVISIONS	DRWN	CHKD
5	9/30/98	NO AS-BUILT INFORMATION ADDED	DSM	KAS
4	12/26/96	CONTRACT PLANS	DSM	MPY
3	11/11/96	FINAL REVIEW REVISIONS	DSM	MPY
2	6/4/96	REVISIONS PER REVIEW COMMENTS	DSM	MPY
1	4/8/96	REVISIONS PER REVIEW COMMENTS	DSM	MPY

TIMOTHY D. SMITH & ASSOCIATES, PC ARCHITECTS
OLD RAILROAD STATION, NORTH BENNINGTON, VERMONT 05257
802-442-8184 FAX 802-442-5241

WRIGHT ENGINEERING, LTD. CIVIL ENGINEERS
128 MERCHANTS ROW - P.O. BOX 176, RUTLAND, VERMONT 05702-0176
802-775-2511 FAX 802-775-8915

STATE OF VERMONT KEVIN SMITH No. 5864 4/30/98 REGISTERED PROFESSIONAL ENGINEER

PROJECT NO.IM 091-1 (29)

WATER & SEWER EXTENSION PROJECT

TOWN OF GUILFORD
TOWN OF BRATTLEBORO

SHEET TITLE: PUMP STATION DETAILS, WINDOW SCHEDULE AND DETAILS

DSGN BY: MPY
DRWN BY: DSM
CHKD BY: JAC
CHKD BY: MPY

STATE OF VERMONT
AGENCY OF TRANSPORTATION
SOUTHEAST VERMONT WELCOME CENTER
GUILFORD, VERMONT

DATE: 1-2-96 SHEET NO. 26 OF 55 SHEETS

C:\ACAD12\9501\9501648 Fri Oct 9 13:25:25 1998

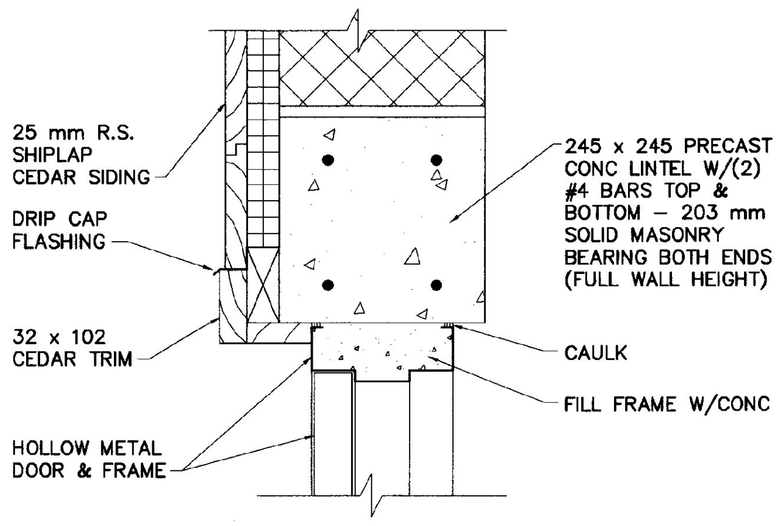

DL–1 DOORS NO. 1 2

DOOR HEAD DETAILS AND LINTEL MARKS

SCALE: 1:5

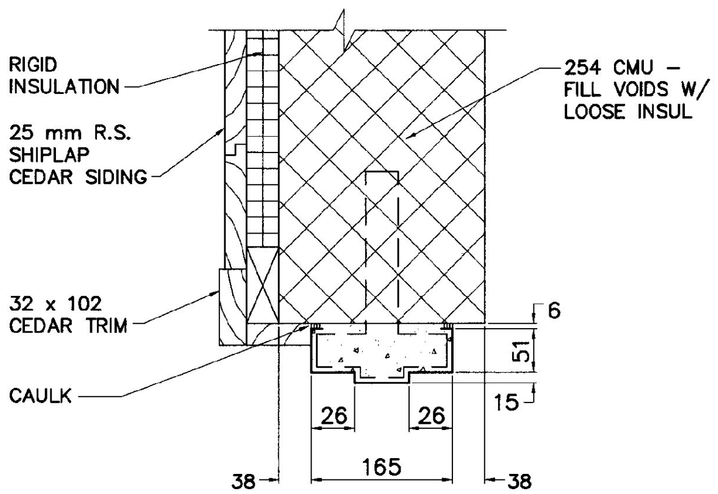

1

DOOR JAMB DETAILS

SCALE: 1:5

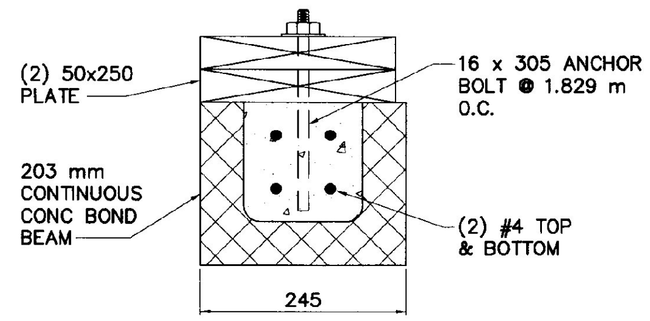

CONCRETE BOND BEAM DETAIL

SCALE: 1:5

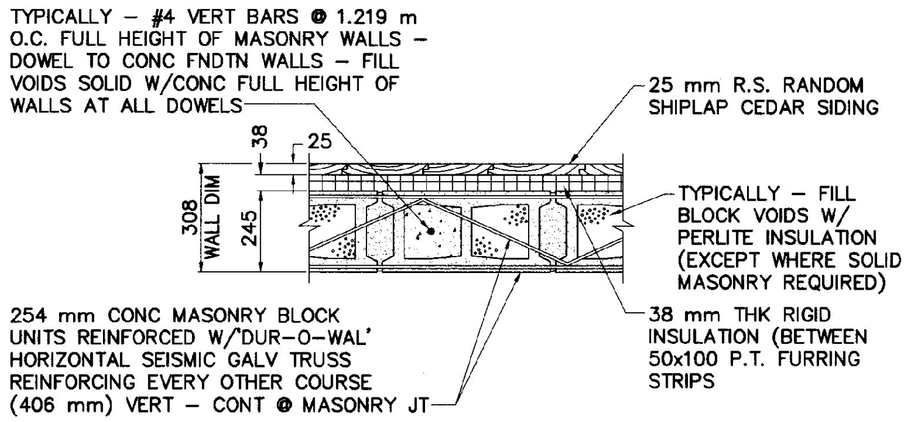

EXTERIOR WALL REINFORCEMENT DETAIL

NOT TO SCALE

DOOR SCHEDULE

DOOR NUMBER	DOOR			FRAME	SADDLE	LINTEL	REMARKS
	SIZE	MATERIAL	TYPE	MATERIAL	MATERIAL		
1	914 x 2,134 x 45	INSULATED HOLLOW METAL	1	HOLLOW METAL	ALUMINUM	DL–1	TOP MOUNTED DOOR CLOSER, FULL WEATHERSTRIP, INSULATED CORE
2	(2) 914 x 2,134 x 45	INSULATED HOLLOW METAL	1	HOLLOW METAL	ALUMINUM	DL–1	TOP MOUNTED DOOR CLOSER, FULL WEATHERSTRIP, INSULATED CORE
3	2,134 x 2,286 x 45	R.S. CEDAR	2	N/A	N/A	N/A	SCREWED AND GLUED, EDGE BAND W/R.S. CEDAR

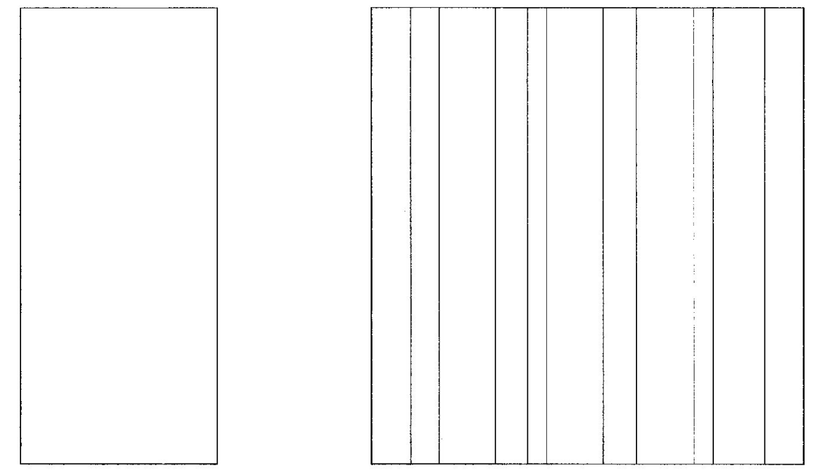

1 FLUSH HOLLOW METAL

2 R.S. CEDAR

DOOR TYPES

SCALE: 1:20

RECORD DRAWING

SHOWN PICTORALLY
MAY NOT BE TO SCALE

THESE AS–BUILT OR RECORD DRAWINGS HAVE BEEN PREPARED, IN PART, ON THE BASIS OF INFORMATION COMPILED AND FURNISHED BY OTHERS. THE ENGINEER WILL NOT BE RESPONSIBLE FOR ANY ERRORS OR OMISSIONS WHICH HAVE BEEN INCORPORATED INTO THIS DOCUMENT AS A RESULT OF INFORMATION BY OTHERS.

VAOT Metric

NO.	DATE	REVISIONS	DRWN	CHKD
5	9/30/98	NO AS–BUILT INFORMATION ADDED	DSM	KAS
4	12/26/96	CONTRACT PLANS	DSM	MPY
3	11/11/96	FINAL REVIEW REVISIONS	DSM	MPY
2	6/4/96	REVISIONS PER REVIEW COMMENTS	DSM	MPY
1	4/8/96	REVISIONS PER REVIEW COMMENTS	DSM	MPY

TIMOTHY D. SMITH & ASSOCIATES, PC ARCHITECTS
OLD RAILROAD STATION NORTH BENNINGTON, VERMONT 05257
802–442–8184 FAX 802–442–5241
WRIGHT ENGINEERING, LTD. CIVIL ENGINEERS
128 MERCHANTS ROW – P.O. BOX 176 RUTLAND, VERMONT 05702–0176
802–775–2511 FAX 802–775–8915

STATE OF VERMONT KEVIN A SMITH No. 5864 REGISTERED PROFESSIONAL ENGINEER

PROJECT NO.IM 091–1 (29)
WATER & SEWER EXTENSION PROJECT
TOWN OF GUILFORD
TOWN OF BRATTLEBORO

SHEET TITLE: PUMP STATION DETAILS, DOOR LINTEL MARKS, DOOR FRAME DETAILS

DSGN BY: MPY
DRWN BY: DSM
CHKD BY: JAC
CHKD BY: MPY

STATE OF VERMONT
AGENCY OF TRANSPORTATION
SOUTHEAST VERMONT WELCOME CENTER
GUILFORD, VERMONT

DATE: 1–2–96 SHEET NO. 27 OF 55 SHEETS

C:\MAJIC\9501\9501218 Fri Oct 9 13:27:05 1998

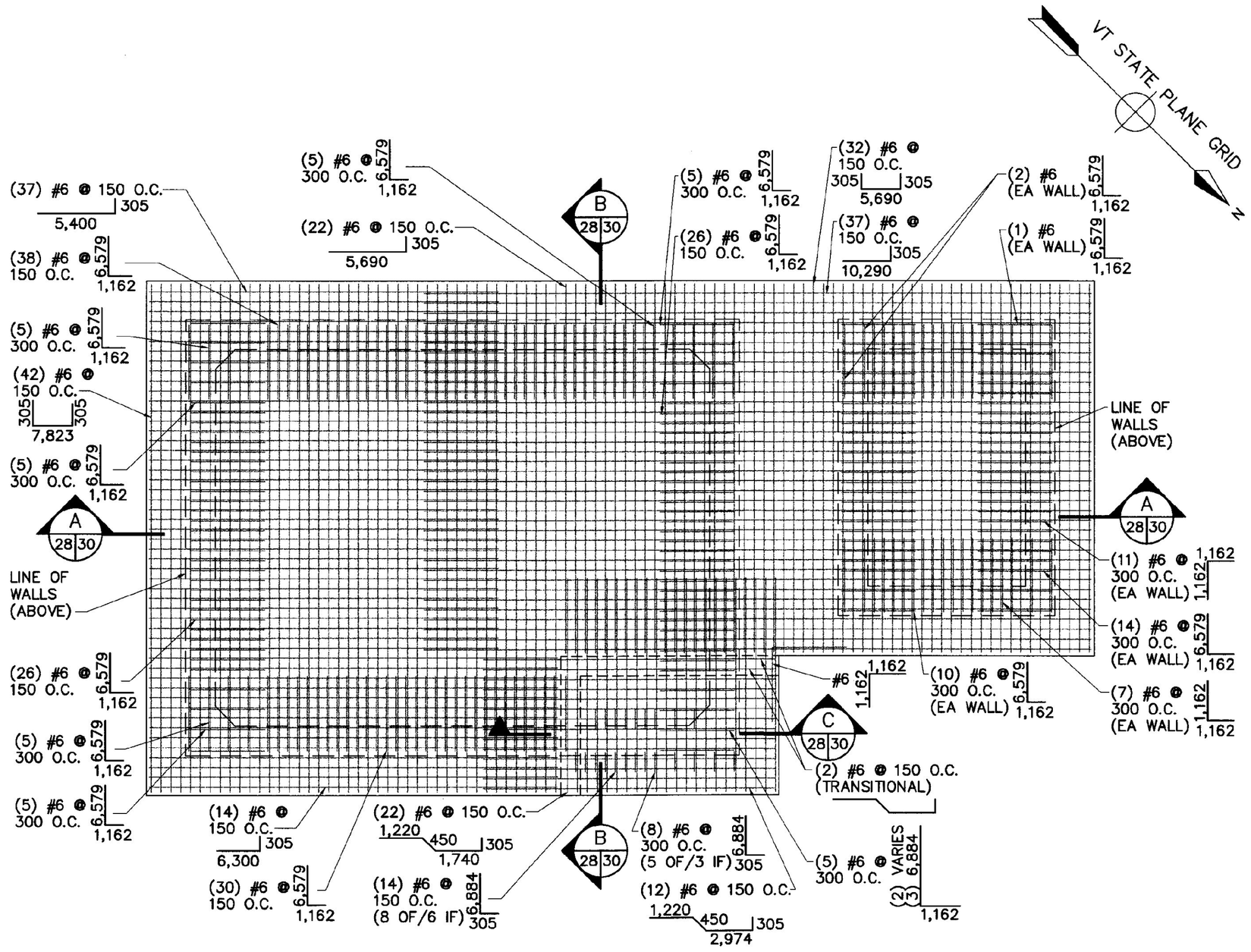

BASE SLAB PLAN
BOTTOM MAT
SCALE: 1:50

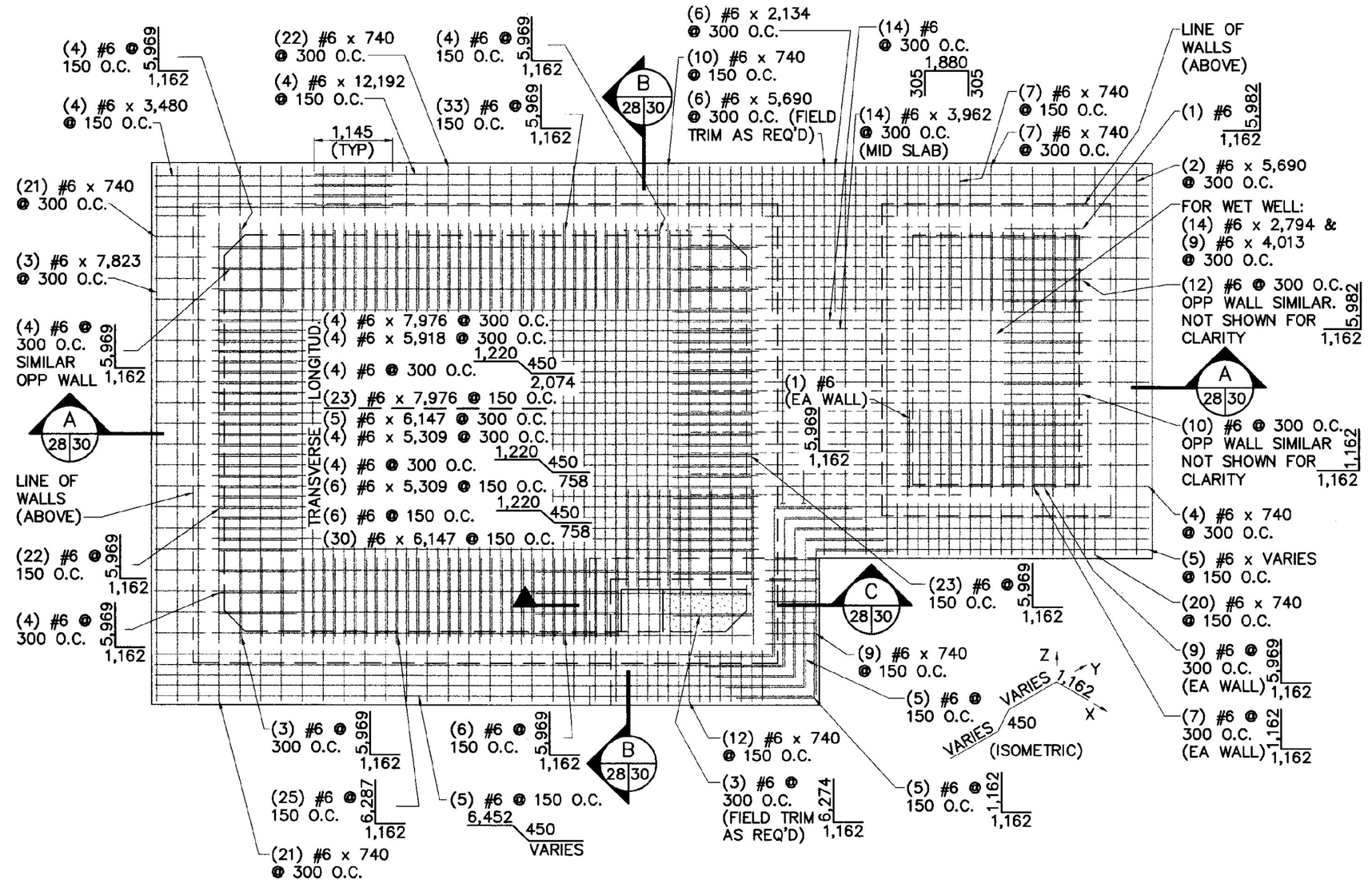

BASE SLAB PLAN
TOP MAT
SCALE: 1:50

RECORD DRAWING

SHOWN PICTORALLY
MAY NOT BE TO SCALE

THESE AS-BUILT OR RECORD DRAWINGS HAVE BEEN PREPARED, IN PART, ON THE BASIS OF INFORMATION COMPILED AND FURNISHED BY OTHERS. THE ENGINEER WILL NOT BE RESPONSIBLE FOR ANY ERRORS OR OMISSIONS WHICH HAVE BEEN INCORPORATED INTO THIS DOCUMENT AS A RESULT OF INFORMATION BY OTHERS.

VAOT Metric

NO.	DATE	REVISIONS	DRWN	CHKD
5	9/30/98	NO AS-BUILT INFORMATION ADDED	DSM	KAS
4	12/26/96	CONTRACT PLANS	DSM	MPY
3	11/11/96	FINAL REVIEW REVISIONS	DSM	MPY
2	6/4/96	REVISIONS PER REVIEW COMMENTS	DSM	MPY
1	4/8/96	REVISIONS PER REVIEW COMMENTS	DSM	MPY

TIMOTHY D. SMITH & ASSOCIATES, PC ARCHITECTS
OLD RAILROAD STATION NORTH BENNINGTON, VERMONT 05257
802-442-6184 FAX 802-442-5241
WRIGHT ENGINEERING, LTD. CIVIL ENGINEERS
128 MERCHANTS ROW - P.O. BOX 176 RUTLAND, VERMONT 05702-0176
802-775-2511 FAX 802-775-8915

STATE OF VERMONT KEVIN A. SMITH No. 5864 REGISTERED PROFESSIONAL ENGINEER 1998

PROJECT NO.IM 091-1 (29)
WATER & SEWER EXTENSION PROJECT
TOWN OF GUILFORD
TOWN OF BRATTLEBORO

SHEET TITLE: PUMP STATION BASE SLAB PLANS - STRUCTURAL

DSGN BY: KAS
DRWN BY: DSM
CHKD BY: KAS
CHKD BY: MPY

STATE OF VERMONT
AGENCY OF TRANSPORTATION
SOUTHEAST VERMONT WELCOME CENTER
GUILFORD, VERMONT

DATE: 1-2-96 SHEET NO. 28 OF 55 SHEETS

C:\ACAD\2\0501\0501128AB Fri Oct 9 13:28:10 1998

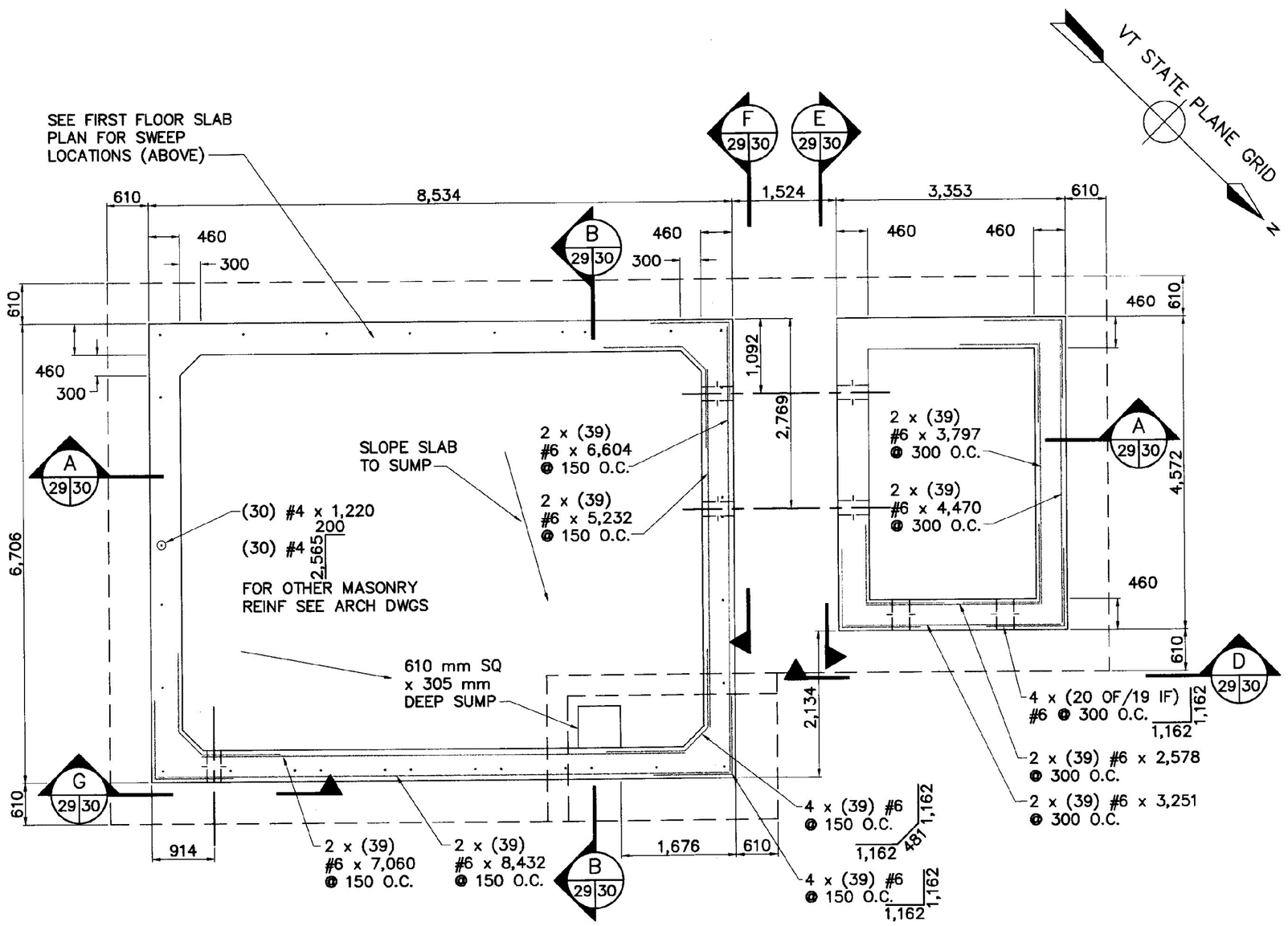

FOUNDATION PLAN

SCALE: 1:50

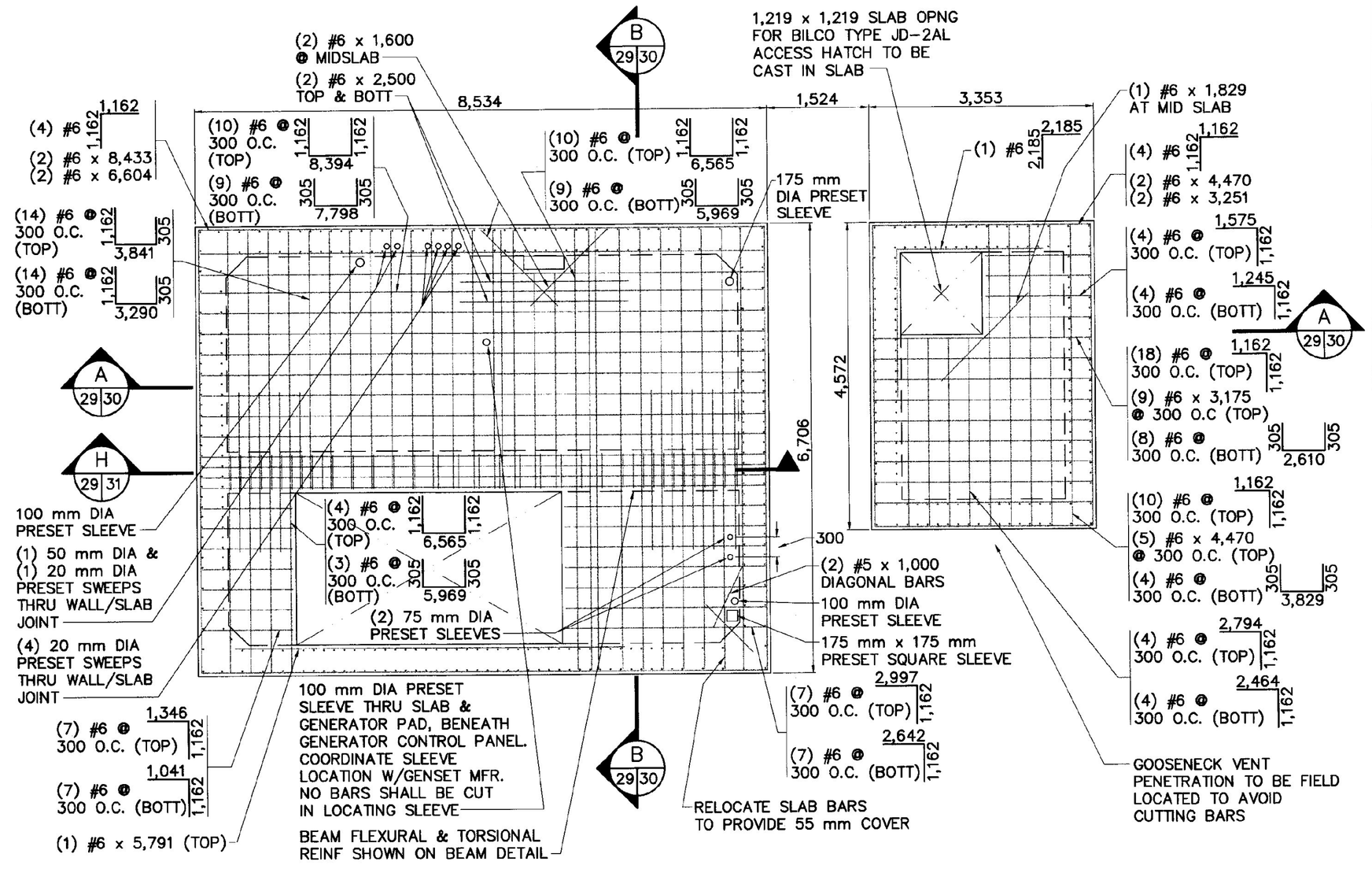

FIRST FLOOR SLAB PLAN

SCALE: 1:50

NOTES:

1. ALL SLEEVE DIMENSIONS SHOWN ARE EXTERIOR MEASUREMENTS.
2. ALL SLEEVE PLACEMENTS SHALL ALLOW FOR 55 mm MINIMUM CLEAR COVER FROM SLAB OR WALL REINFORCEMENT. SHOULD THIS NOT BE POSSIBLE IN ISOLATED LOCATIONS, AS DIRECTED BY THE ENGINEER, PROVISIONS OF THE SLAB/WALL OPENING DETAIL SHALL APPLY IN TOTAL.
3. ALL SLEEVES AND SWEEPS SHALL BE PRESET. CORING SHALL NOT BE ALLOWED.

RECORD DRAWING

SHOWN PICTORALLY
MAY NOT BE TO SCALE

THESE AS-BUILT OR RECORD DRAWINGS HAVE BEEN PREPARED, IN PART, ON THE BASIS OF INFORMATION COMPILED AND FURNISHED BY OTHERS. THE ENGINEER WILL NOT BE RESPONSIBLE FOR ANY ERRORS OR OMISSIONS WHICH HAVE BEEN INCORPORATED INTO THIS DOCUMENT AS A RESULT OF INFORMATION BY OTHERS.

VAOT Metric

NO.	DATE	REVISIONS	DRWN	CHKD
5	9/30/98	NO AS-BUILT INFORMATION ADDED	DSM	KAS
4	12/26/96	CONTRACT PLANS	DSM	MPY
3	11/11/96	FINAL REVIEW REVISIONS	DSM	MPY
2	6/4/96	REVISIONS PER REVIEW COMMENTS	DSM	MPY
1	4/8/96	REVISIONS PER REVIEW COMMENTS	DSM	MPY

TIMOTHY D. SMITH & ASSOCIATES, PC ARCHITECTS
OLD RAILROAD STATION, NORTH BENNINGTON, VERMONT 05257
802-442-8184, FAX 802-442-5241
WRIGHT ENGINEERING, LTD. CIVIL ENGINEERS
128 MERCHANTS ROW - P.O. BOX 176, RUTLAND, VERMONT 05702-0176
802-775-2511, FAX 802-775-8915

STATE OF VERMONT KEVIN A. SMITH No. 5864 REGISTERED PROFESSIONAL ENGINEER

PROJECT NO.IM 091-1 (29)

WATER & SEWER EXTENSION PROJECT

TOWN OF GUILFORD
TOWN OF BRATTLEBORO

SHEET TITLE: PUMP STATION FOUNDATION AND FIRST FLOOR SLAB PLANS - STRUCTURAL

DSGN BY: KAS
DRWN BY: DSM
CHKD BY: KAS
CHKD BY: MPY

STATE OF VERMONT
AGENCY OF TRANSPORTATION
SOUTHEAST VERMONT WELCOME CENTER
GUILFORD, VERMONT

DATE: 1-2-96 SHEET NO. 29 OF 55 SHEETS

C:\ACAD12\950130212948 Fri Oct 9 13:29:09 1998

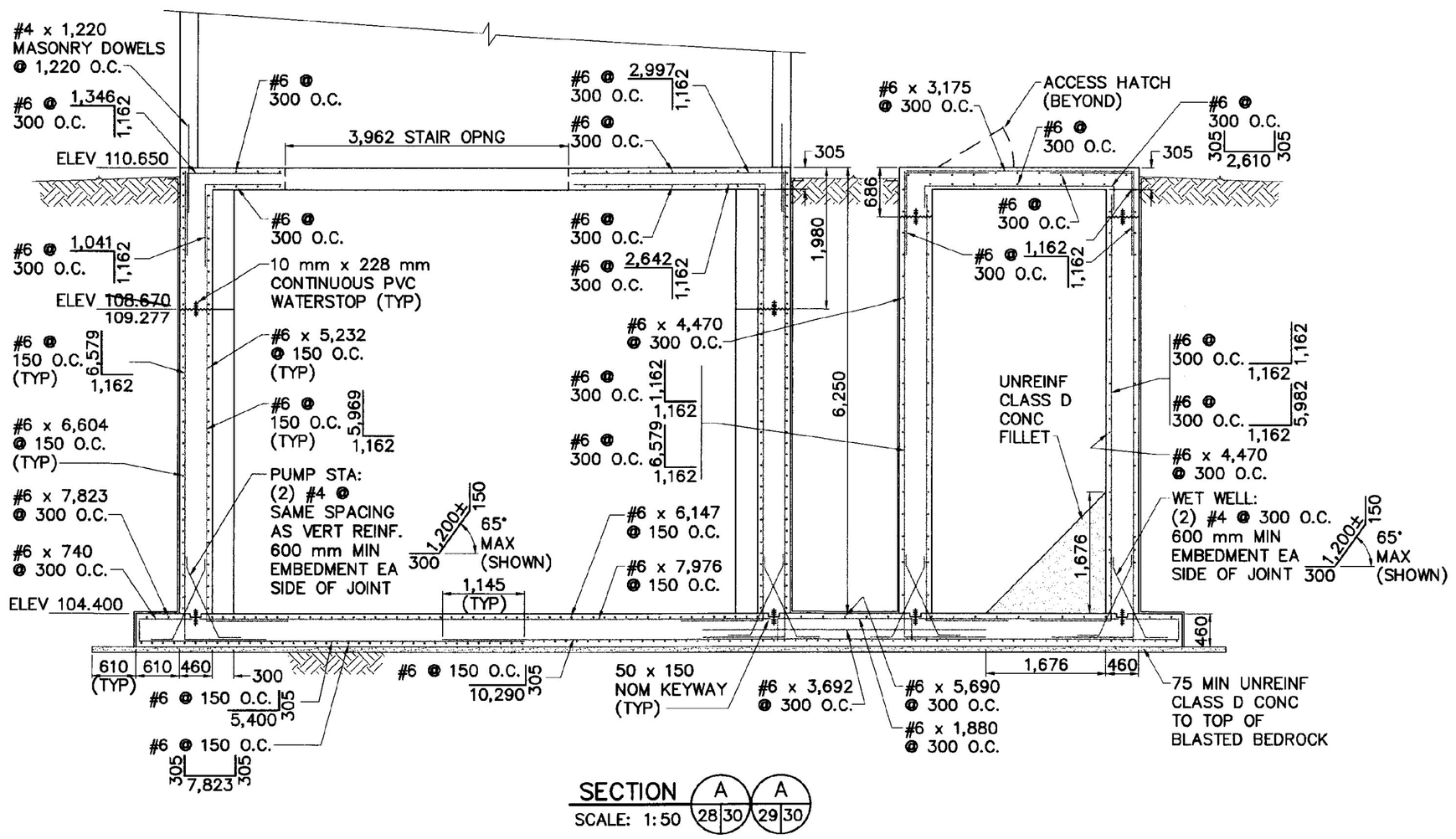

SECTION A A
SCALE: 1:50 28|30 29|30

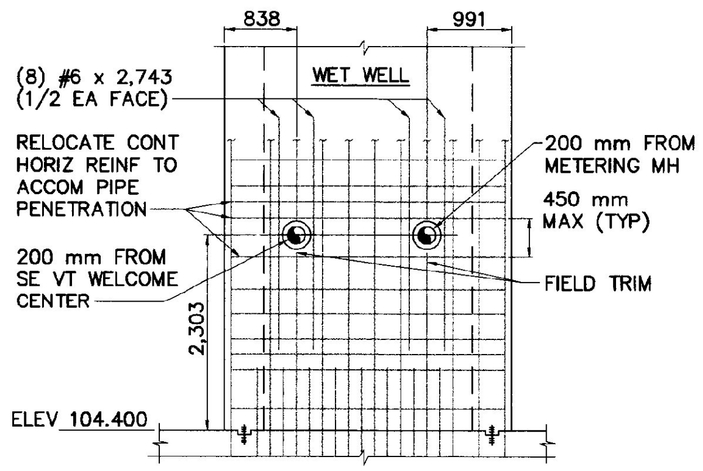

SECTION D
SCALE: 1:50 29|30

NOTE:
WALL PENETRATIONS FOR PVC SUMP DISCHARGE, CU DOMESTIC WATER & CU BUBBLER LINE TO BE LOCATED BETWEEN INVERT 108.670 & 109.100 AND TO AVOID CUTTING BARS.

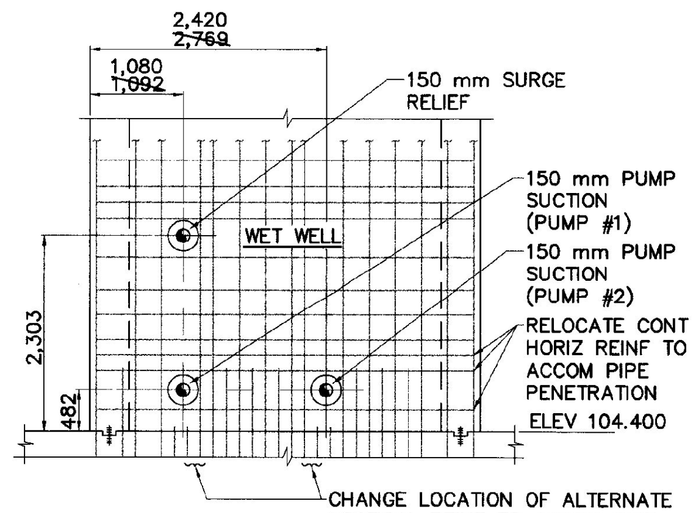

SECTION E
SCALE: 1:50 29|30

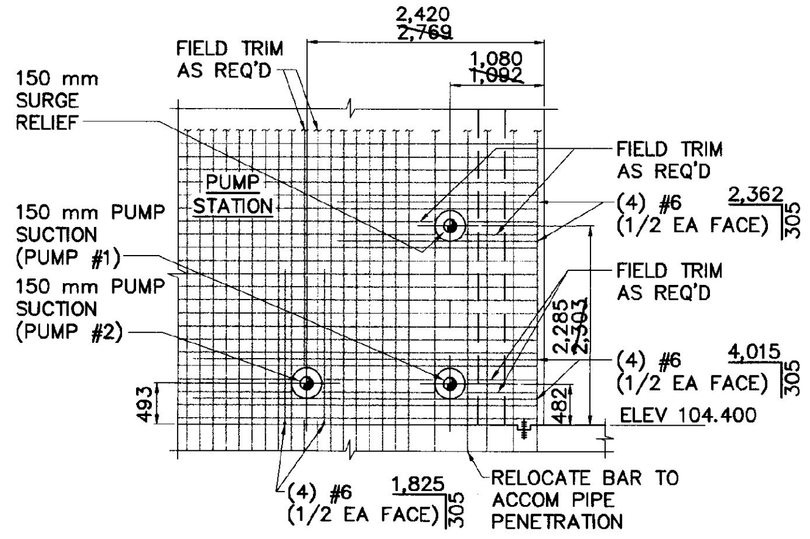

SECTION F
SCALE: 1:50 29|30

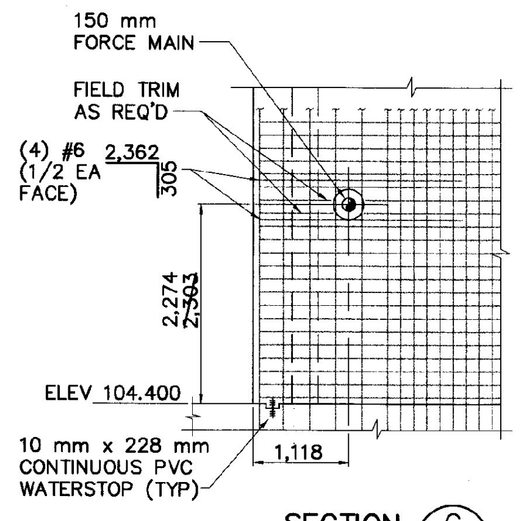

SECTION G
SCALE: 1:50 29|30

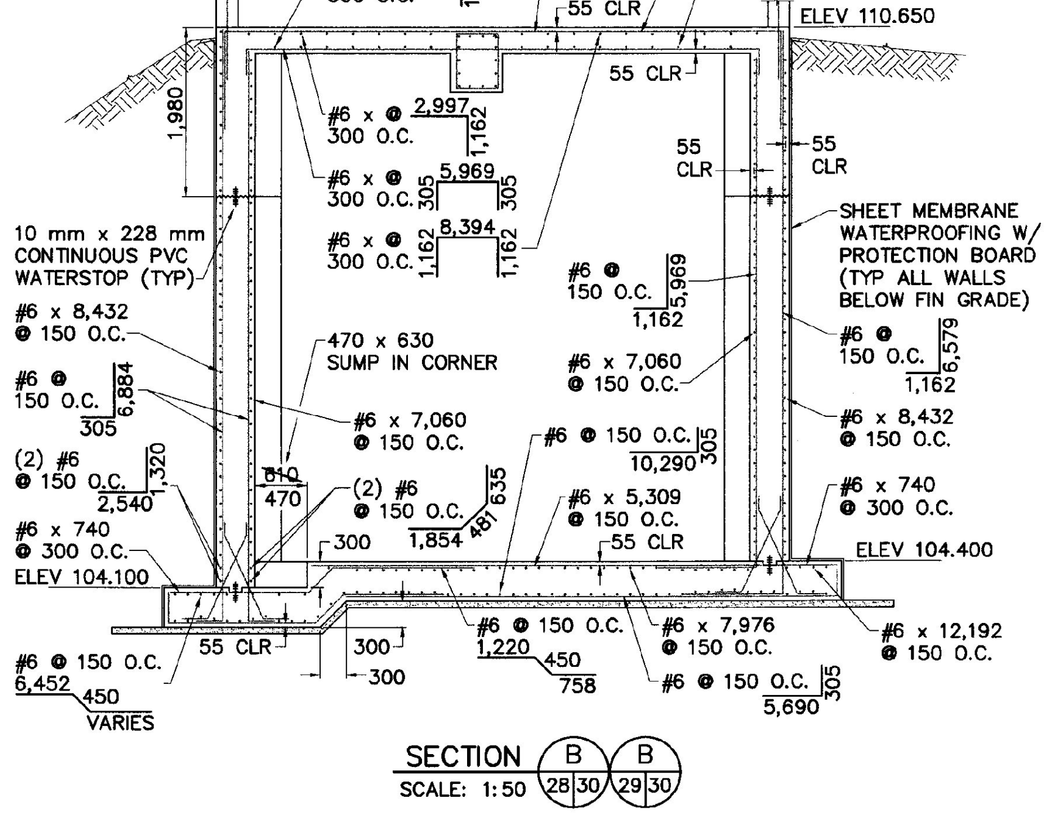

SECTION B B
SCALE: 1:50 28|30 29|30

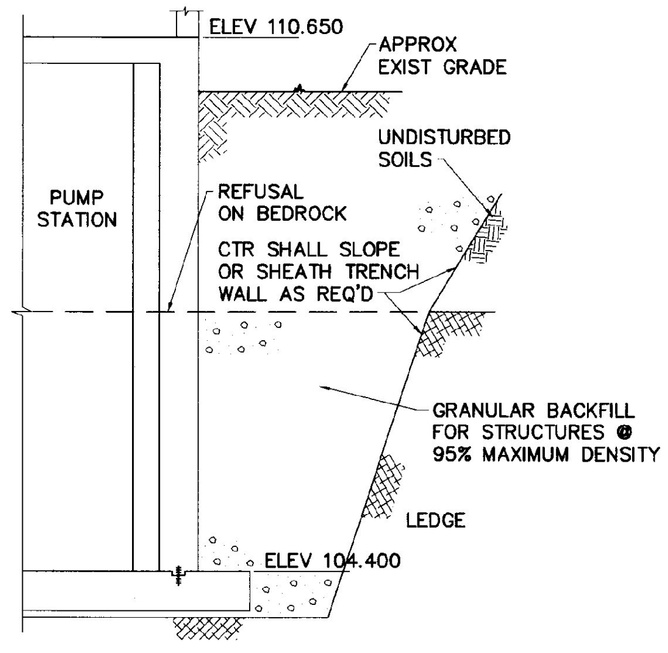

SUB-SURFACE CROSS SECTION
(AT BORING WE-34)
SCALE: 1:50

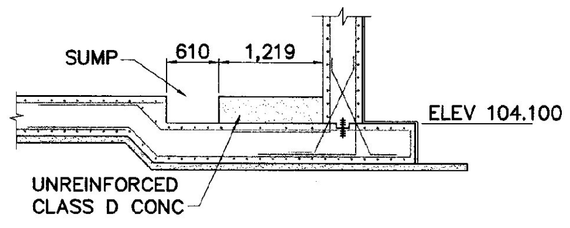

SECTION C
SCALE: 1:50 28|30

RECORD DRAWING

SHOWN PICTORALLY
MAY NOT BE TO SCALE

THESE AS-BUILT OR RECORD DRAWINGS HAVE BEEN PREPARED, IN PART, ON THE BASIS OF INFORMATION COMPILED AND FURNISHED BY OTHERS. THE ENGINEER WILL NOT BE RESPONSIBLE FOR ANY ERRORS OR OMISSIONS WHICH HAVE BEEN INCORPORATED INTO THIS DOCUMENT AS A RESULT OF INFORMATION BY OTHERS.

VAOT Metric

NO.	DATE	REVISIONS	DRWN	CHKD
5	9/30/98	AS-BUILT INFORMATION ADDED	DSM	KAS
4	12/26/96	CONTRACT PLANS	DSM	MPY
3	11/11/96	FINAL REVIEW REVISIONS	DSM	MPY
2	6/4/96	REVISIONS PER REVIEW COMMENTS	DSM	MPY
1	4/8/96	REVISIONS PER REVIEW COMMENTS	DSM	MPY

TIMOTHY D. SMITH & ASSOCIATES, PC ARCHITECTS
OLD RAILROAD STATION NORTH BENNINGTON, VERMONT 05257
802-442-8184 FAX 802-442-5241
WRIGHT ENGINEERING, LTD. CIVIL ENGINEERS
128 MERCHANTS ROW - P.O. BOX 176 RUTLAND, VERMONT 05702-0176
802-775-2511 FAX 802-775-8915

STATE OF VERMONT KEVIN A. SMITH No. 5664 REGISTERED PROFESSIONAL ENGINEER

PROJECT NO.IM 091-1 (29)
WATER & SEWER EXTENSION PROJECT
TOWN OF GUILFORD
TOWN OF BRATTLEBORO

SHEET TITLE: PUMP STATION SECTIONS - STRUCTURAL

DSGN BY: KAS
DRWN BY: DSM
CHKD BY: KAS
CHKD BY: MPY

STATE OF VERMONT
AGENCY OF TRANSPORTATION
SOUTHEAST VERMONT WELCOME CENTER
GUILFORD, VERMONT

DATE: 1-2-96 SHEET NO. 30 OF 55 SHEETS

C:\ACAD12\9501\9501308.dwg Fri Oct 9 13:30:11 1998

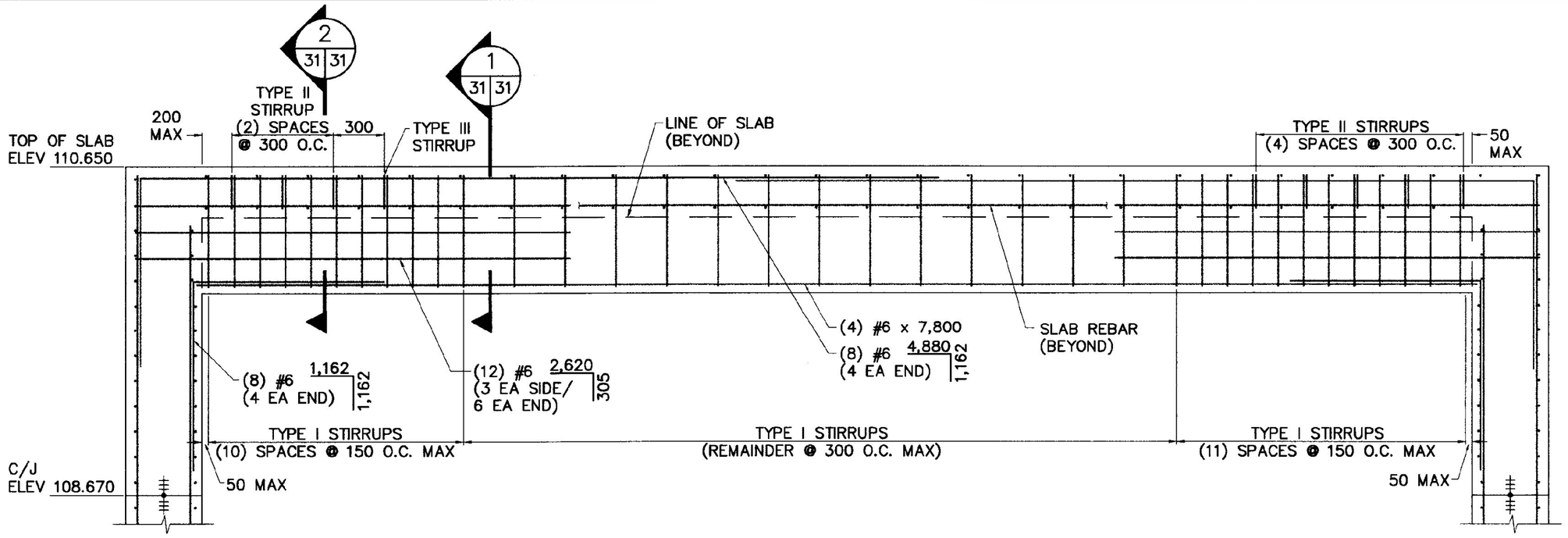

SECTION H
SCALE: 1:20 29 31

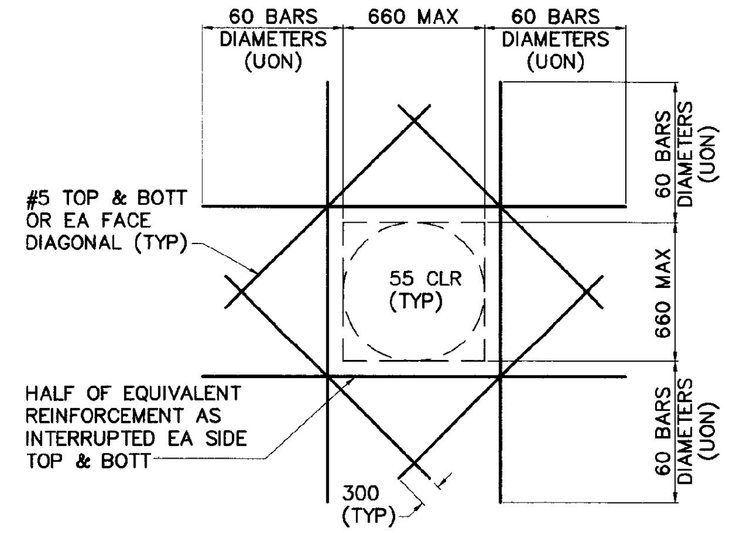

CONCRETE WALL OR SLAB OPENING DETAIL

NOT TO SCALE

(FOR PENETRATIONS NOT SHOWN ON PLANS WHICH REQUIRE BAR TRUNCATION)

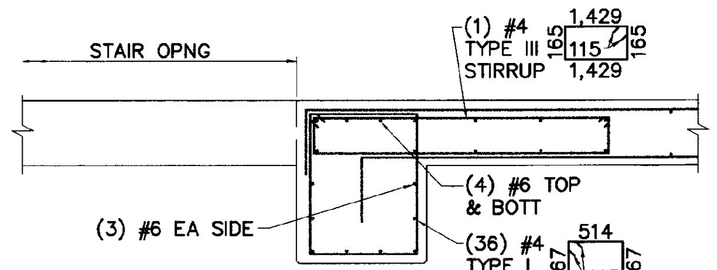

SECTION 1
SCALE: 1:20 31 31

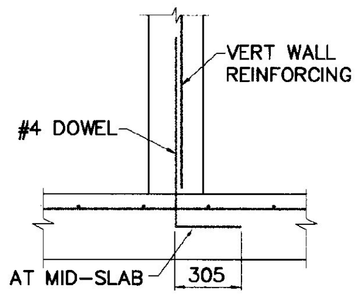

OPTION I

DOWEL PLACEMENT PRIOR TO CONCRETE SLAB PLACEMENT

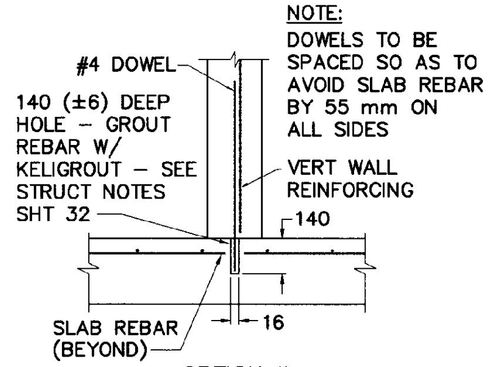

OPTION II

DRILL AND GROUT DOWELS AFTER CONCRETE SLAB PLACEMENT

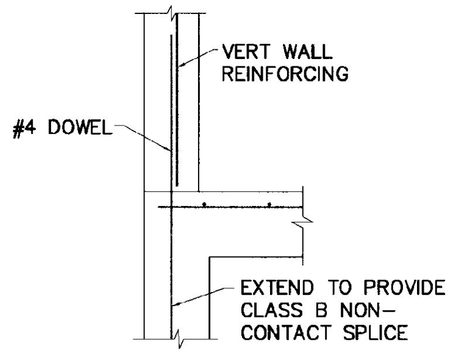

OPTION III

DOWEL PLACEMENT PRIOR TO CONCRETE WALL PLACEMENT

BUILDING WALL ANCHORAGE DETAILS

NOT TO SCALE

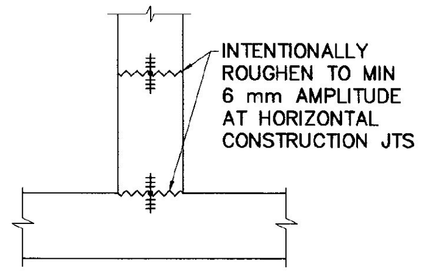

JOINT ROUGHENING DETAIL

NOT TO SCALE

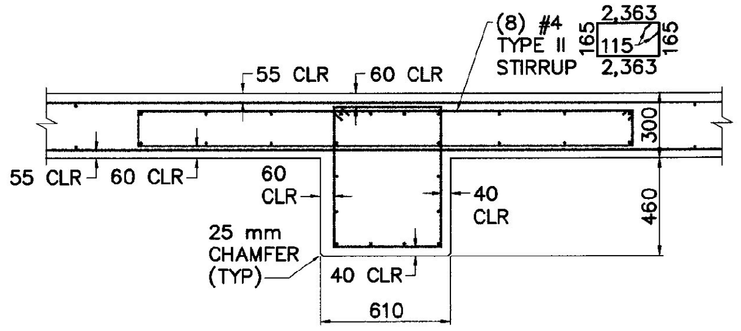

SECTION 2
SCALE: 1:20 31 31

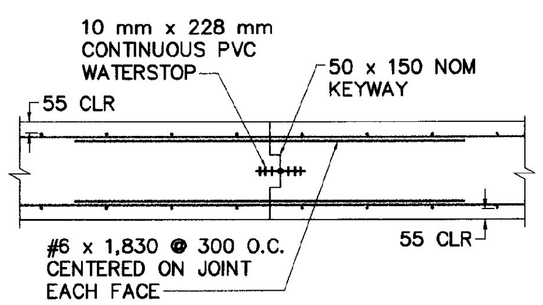

CONSTRUCTION JOINT DETAIL

NOT TO SCALE

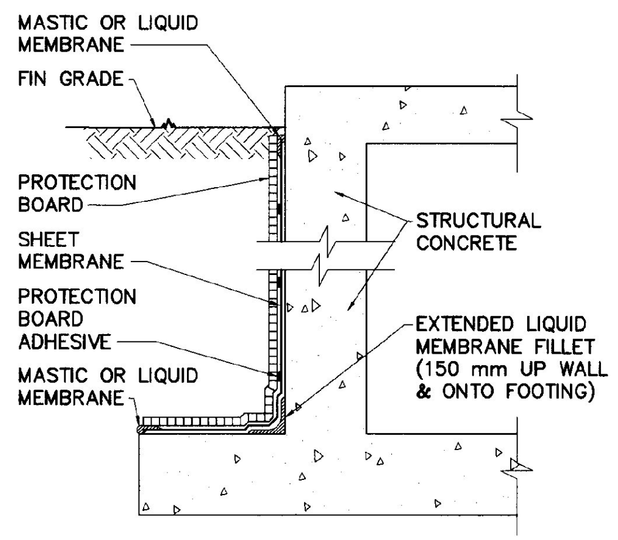

AT FOUNDATION WALL

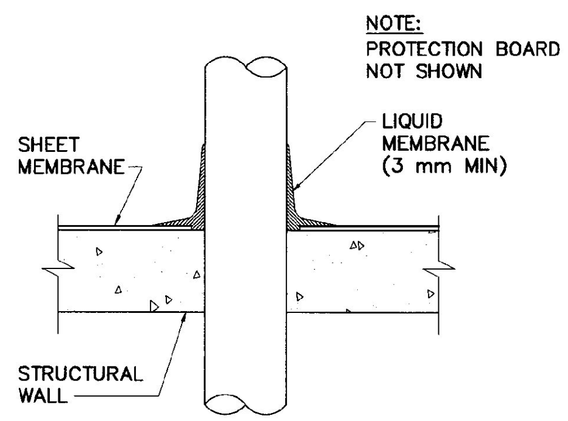

AT PENETRATIONS

SHEET MEMBRANE WATERPROOFING DETAILS

NOT TO SCALE

RECORD DRAWING

SHOWN PICTORALLY
MAY NOT BE TO SCALE

THESE AS-BUILT OR RECORD DRAWINGS HAVE BEEN PREPARED, IN PART, ON THE BASIS OF INFORMATION COMPILED AND FURNISHED BY OTHERS. THE ENGINEER WILL NOT BE RESPONSIBLE FOR ANY ERRORS OR OMISSIONS WHICH HAVE been INCORPORATED INTO THIS DOCUMENT AS A RESULT OF INFORMATION BY OTHERS.

VAOT Metric

NO.	DATE	REVISIONS	DRWN	CHKD
5	9/30/98	NO AS-BUILT INFORMATION ADDED	DSM	KAS
4	12/26/96	CONTRACT PLANS	DSM	MPY
3	11/11/96	FINAL REVIEW REVISIONS	DSM	MPY
2	6/4/96	REVISIONS PER REVIEW COMMENTS	DSM	MPY
1	4/8/96	REVISIONS PER REVIEW COMMENTS	DSM	MPY

TIMOTHY D. SMITH & ASSOCIATES, PC ARCHITECTS
OLD RAILROAD STATION, NORTH BENNINGTON, VERMONT 05257
802-442-6184 FAX 802-442-5241

WRIGHT ENGINEERING, LTD. CIVIL ENGINEERS
128 MERCHANTS ROW – P.O. BOX 176, RUTLAND, VERMONT 05702-0176
802-775-2511 FAX 802-775-8915

STATE OF VERMONT KEVIN B. SMITH No. 5864 REGISTERED PROFESSIONAL ENGINEER

PROJECT NO.IM 091-1 (29)
WATER & SEWER EXTENSION PROJECT
TOWN OF GUILFORD
TOWN OF BRATTLEBORO

SHEET TITLE: PUMP STATION SECTIONS AND DETAILS – STRUCTURAL

DSGN BY: KAS
DRWN BY: DSM
CHKD BY: KAS
CHKD BY: MPY

STATE OF VERMONT
AGENCY OF TRANSPORTATION
SOUTHEAST VERMONT WELCOME CENTER
GUILFORD, VERMONT

DATE: 1-2-96 SHEET NO. 31 OF 55 SHEETS

C:\ACAD12\DSD1\95013140 Fri Oct 9 13:31:25 1998

STRUCTURAL NOTES

1. ALL DIMENSIONS ARE SHOWN IN MILLIMETERS UNLESS OTHERWISE NOTED.
2. SUPPLIER TO CONFIRM ALL DIMENSIONS SHOWN.
3. ALL CONCRETE SHALL CONFORM TO VAOT SPECIFICATION SECTION 501, CLASS A, UNLESS OTHERWISE NOTED.
4. SLABS TO HAVE STEEL TROWEL FINISH.
5. ALL BAR REINFORCEMENT SHALL BE GRADE 60 AND CONFORM TO VAOT SPECIFICATION SECTIONS 507, 713.01 AND 713.07 (EPOXY COATED BAR REINFORCEMENT).
6. LAP SPLICES SHALL BE 60 BAR DIAMETERS UNLESS OTHERWISE NOTED.
7. EMBEDMENT LENGTHS SHALL BE 48 BAR DIAMETERS UNLESS OTHERWISE NOTED.
8. BASE SLAB TOP MAT BARS SHALL BE SPLICED, IF REQUIRED, AT WALL INTERSECTIONS.
9. BASE SLAB BOTTOM MAT BARS SHALL BE SPLICED, IF REQUIRED, BETWEEN WALL INTERSECTIONS.
10. BASE SLAB TO BE CAST WITHOUT CONSTRUCTION JOINTS.
11. CONTRACTOR SHALL BE RESPONSIBLE TO ENSURE THAT BUOYANT CONDITIONS DURING CONSTRUCTION DUE TO HIGH GROUND WATER LEVEL, FAILURE OF DEWATERING SYSTEMS OR FLOODING ARE AVOIDED.
12. EPOXY GROUT: KELIGROUT BY KELKEN–GOLD, INC., SOUTH PLAINFIELD, NEW JERSEY FOR #4 INTERIOR WALL DOWELS OR APPROVED EQUAL. MATERIAL SPECIFICATION TO BE SUBMITTED TO ENGINEER PRIOR TO USE.

    EMBEDMENT OF DOWELS SHALL BE 140 mm ±6 mm.

    HOLES SHALL BE DRILLED WITH PNEUMATIC DEVICES. HOLES AFTER DRILLING SHALL BE FREE OF ALL WATER, DUST AND OTHER DEBRIS. HOLES SHALL NOT BE MADE WITH ELECTRIC DRILLING OR CORING.

    DRILLED HOLES SHALL BE LOCATED A MINIMUM OF 50 mm IN ANY DIRECTION FROM PROPOSED SLAB REINFORCEMENT.

    MIXING AND INSTALLATION SHALL BE AS PER MANUFACTURER'S RECOMMENDATIONS. AFTER MIXING, THE REINFORCING ROD SHALL BE PUSHED TO THE BOTTOM OF THE HOLE AND ROTATED TO ASSURE TOTAL WETTING. DOWELS SHALL BE LEFT UNDISTURBED A MINIMUM OF ONE HOUR OR UNTIL CURING IS COMPLETE.

    STORAGE AND SHELF LIFE RESTRICTIONS SHALL BE AS PER MANUFACTURER.

    PRIOR TO INSTALLATION, CONTRACTOR SHALL DEMONSTRATE THIS TECHNIQUE BY SETTING TWO (2) TEST DOWELS INTO THE NEW SLAB AT THE LOCATION OF AN INTERIOR WALL. THESE TWO INITIAL HOLES SHALL BE THE LAST TO BE INCORPORATED INTO THE WORK AND SHALL BE AVAILABLE FOR TESTING AT THE DISCRETION OF THE ENGINEER. IN ADDITION, ANY DOWEL THAT, IN THE OPINION OF THE ENGINEER, IS UNSATISFACTORILY PLACED SHALL BE TENSION TESTED OR CUT OFF AND REPLACED BY ADDITIONAL DOWELS TO EITHER SIDE OF IT.

13. WATERTIGHTNESS:

    A. ALL STRUCTURES HOLDING OR CONVEYING WATER OR SEWAGE, INCLUDING BASEMENT WALLS AND FLOORS, SHALL BE MADE AND PROVED FREE FROM SEEPAGE OR LEAKAGE FROM ANY DIRECTION. ANY CRACKS OR IMPERFECTIONS WHICH MAY DEVELOP SHALL BE REPAIRED TO THE SATISFACTION OF THE ENGINEER IN ACCORDANCE WITH THE SPECIFICATIONS.

    B. TANKS SHALL BE TESTED FOR WATERTIGHTNESS AND NECESSARY REPAIRS BY FILLING BEFORE THE INSTALLATION OF EQUIPMENT OR THE APPLICATION OF COATINGS. ALL CONCRETE (SUSPENDED SLABS, WALLS, BASE SLAB(S)) AS DEMONSTRATED BY TESTING OF CONCRETE CYLINDERS SHALL HAVE A COMPRESSIVE STRENGTH AT OR ABOVE 27,580 kPa.

    C. ALL STRUCTURES HOLDING WATER OR SEWAGE SHALL BE TESTED IN ACCORDANCE WITH THE FOLLOWING:

        1. ALL TANKS SHALL BE FILLED AT A RATE NOT TO EXCEED 610 mm PER DAY, UNLESS AUTHORIZED OTHERWISE BY THE ENGINEER.
        2. ALL TANKS WILL BE ALLOWED A THREE (3) DAY ABSORPTION PERIOD PRIOR TO BEGINNING THE TEST.
        3. AT THE BEGINNING OF THE TEST, WATER LEVEL MEASUREMENTS WILL BE TAKEN IN THE PRESENCE OF THE ENGINEER IN AT LEAST ONE (1), AND PREFERABLY TWO (2) LOCATION(S) IN EACH TANK.
        4. THE TEST SHALL BE PERFORMED FOR AT LEAST 48 HOURS WITH MEASUREMENT TAKEN AT ALL POINTS ON A 24 HOUR BASIS. IF LEAKAGE PERCEIVED AT 48 HOURS IS AT LEAST 90% OF THE ALLOWABLE LEAKAGE, THE TEST SHALL CONTINUE UNTIL A 13 mm DROP IN THE WATER SURFACE AT ALL POINTS HAS BEEN ACHIEVED. ALLOWABLE LEAKAGE SHALL BE BASED ON THE ENTIRE DURATION OF THE TEST.
        5. THE ALLOWABLE LEAKAGE RATE IS LESS THAN 1% OF THE TANK VOLUME PER 24 HOURS.
        6. DURING THE COURSE OF THE TEST, THE CONTRACTOR SHALL PREVENT ANY MISREADING DUE TO A CHANGE IN WATER TEMPERATURE, EVAPORATION, OR PRECIPITATION.

14. SLAB INJECTION: BASE SLABS SHOWING EVIDENCE OF CURLING OR WARPING, CREATING VOIDS BENEATH SLAB EDGES OR CORNERS, SHALL BE CORRECTED BY NON–SHRINK GROUT INJECTION SUFFICIENT TO CREATE INTIMATE CONTACT BETWEEN BASE SLAB AND SUB–GRADE. UPPER SLAB SURFACE MAY REQUIRE GRINDING. METHOD OF INJECTION TO BE APPROVED BY ENGINEER PRIOR TO COMMENCEMENT. SLABS CURLED SUFFICIENTLY, THAT IN THE OPINION OF THE OWNER THEY ARE UNUSABLE, SHALL BE REPLACED AT NO ADDITIONAL COST TO THE OWNER.
15. CRACK INJECTION: IRRESPECTIVE OF THE RESULTS OF ANY WATERTIGHTNESS TEST, CONCRETE SURFACES SHOWING A SIGNIFICANT NUMBER OF CRACKS BETWEEN 5 MILS AND 10 MILS IN THICKNESS OR A NUMBER OF CRACKS GREATER THAN 10 MILS IN THICKNESS SHALL BE REPAIRED BY EPOXY INJECTION AS DIRECTED BY THE ENGINEER.

BASIS OF DESIGN

BASE SLAB BUOYANCY:

FS = 1.16 WITHOUT SOIL FRICTION

FS = 1.60 WITH SOIL FRICTION

ASSUMPTIONS:

1. 100 YEAR RETURN PERIOD HIGH WATER LEVEL: 109.730 m.
2. MINIMUM FOUNDATION BACKFILL UNIT WEIGHT SHALL BE:

    1,282 kg/m^3 (DRY).

    1,602 kg/m^3 (SATURATED).
3. CONCRETE UNIT WEIGHT USED: 2,307 kg/m^3
4. THE FOLLOWING CONTRIBUTARY WEIGHTS WERE NEGLECTED:

    SUPERSTRUCTURE

    EQUIPMENT

    OTHER ANCILLARY CONSTRUCTION

SUSPENDED SLAB FLEXURE, SHEAR AND TORSION:

UNFACTORED (SERVICE) LIVE LOAD: 730 kg/m^2.

OCCUPIED STAIRWAY LOAD IMPOSED ON SUSPENDED SLAB (UNFACTORED DEAD AND LIVE LOAD): 320 kg MAX.

UNFACTORED (SERVICE) GENERATOR LIVE LOAD INCLUDING 150 mm THICK PLAIN CONCRETE PAD: 780 kg/m^2.

RECORD DRAWING

SHOWN PICTORALLY
MAY NOT BE TO SCALE

THESE AS–BUILT OR RECORD DRAWINGS HAVE BEEN PREPARED, IN PART, ON THE BASIS OF INFORMATION COMPILED AND FURNISHED BY OTHERS. THE ENGINEER WILL NOT BE RESPONSIBLE FOR ANY ERRORS OR OMISSIONS WHICH HAVE BEEN INCORPORATED INTO THIS DOCUMENT AS A RESULT OF INFORMATION BY OTHERS.

VAOT Metric

NO.	DATE	REVISIONS	DRWN	CHKD
5	9/30/98	NO AS–BUILT INFORMATION ADDED	DSM	KAS
4	12/26/96	CONTRACT PLANS	DSM	MPY
3	11/11/96	FINAL REVIEW REVISIONS	DSM	MPY
2	6/4/96	REVISIONS PER REVIEW COMMENTS	DSM	MPY
1	4/8/96	REVISIONS PER REVIEW COMMENTS	DSM	MPY

TIMOTHY D. SMITH & ASSOCIATES, PC ARCHITECTS
OLD RAILROAD STATION, NORTH BENNINGTON, VERMONT 05257
802-442-8184 FAX 802-442-5241
WRIGHT ENGINEERING, LTD. CIVIL ENGINEERS
128 MERCHANTS ROW – P.O. BOX 176, RUTLAND, VERMONT 05702-0176
802-775-2511 FAX 802-775-8915

STATE OF VERMONT KEVIN M. SMITH No. 5864 REGISTERED PROFESSIONAL ENGINEER

PROJECT NO.IM 091-1 (29)
WATER & SEWER EXTENSION PROJECT
TOWN OF GUILFORD
TOWN OF BRATTLEBORO

SHEET TITLE: STRUCTURAL NOTES

DSGN BY: KAS
DRWN BY: DSM
CHKD BY: KAS
CHKD BY: MPY

STATE OF VERMONT
AGENCY OF TRANSPORTATION
SOUTHEAST VERMONT WELCOME CENTER
GUILFORD, VERMONT

DATE: 1-2-96 SHEET NO. 32 OF 55 SHEETS

C:\ACAD12\DEV1\9501926B Fri Oct 9 13:32:22 1998

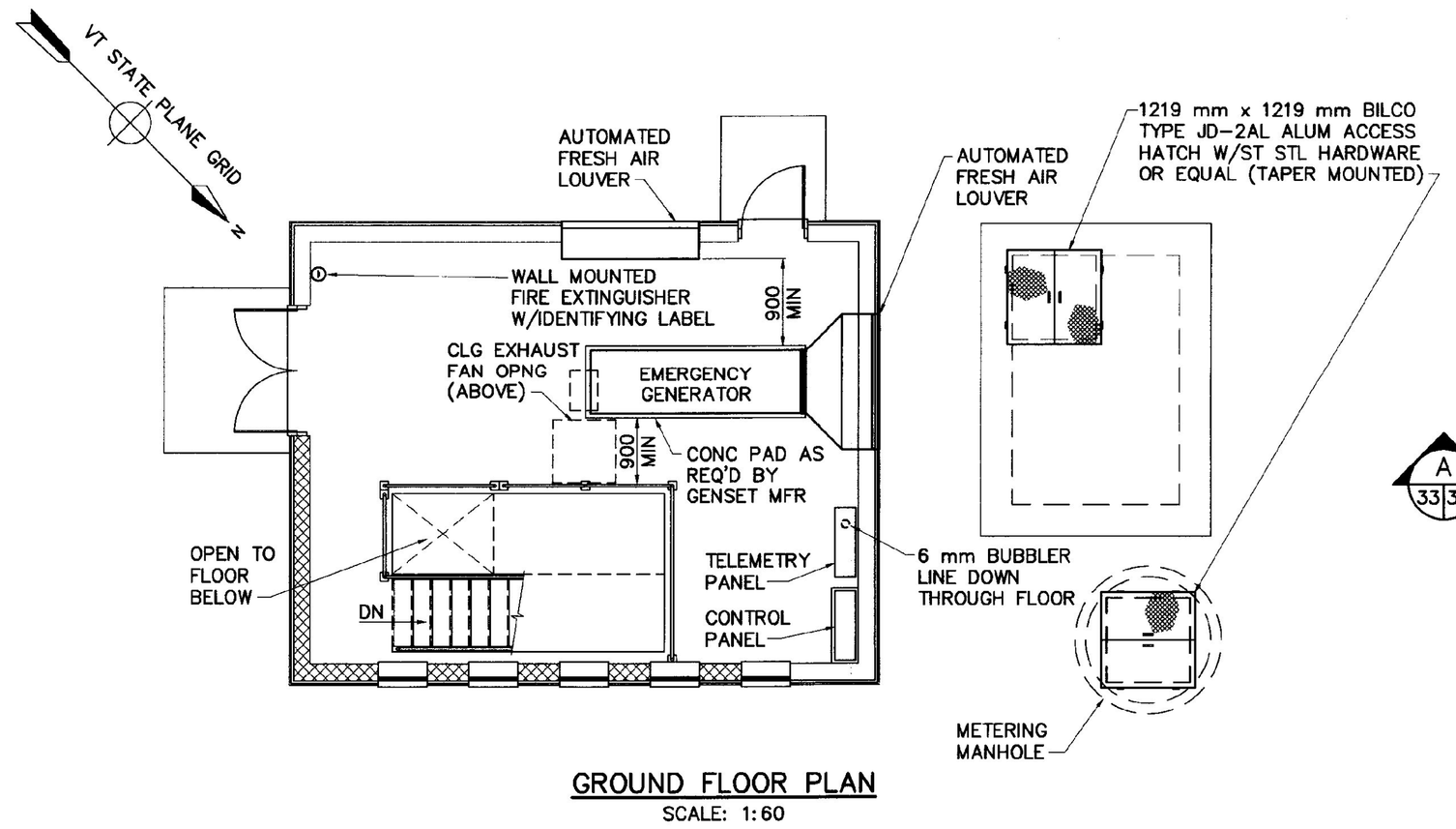

GROUND FLOOR PLAN
SCALE: 1:60

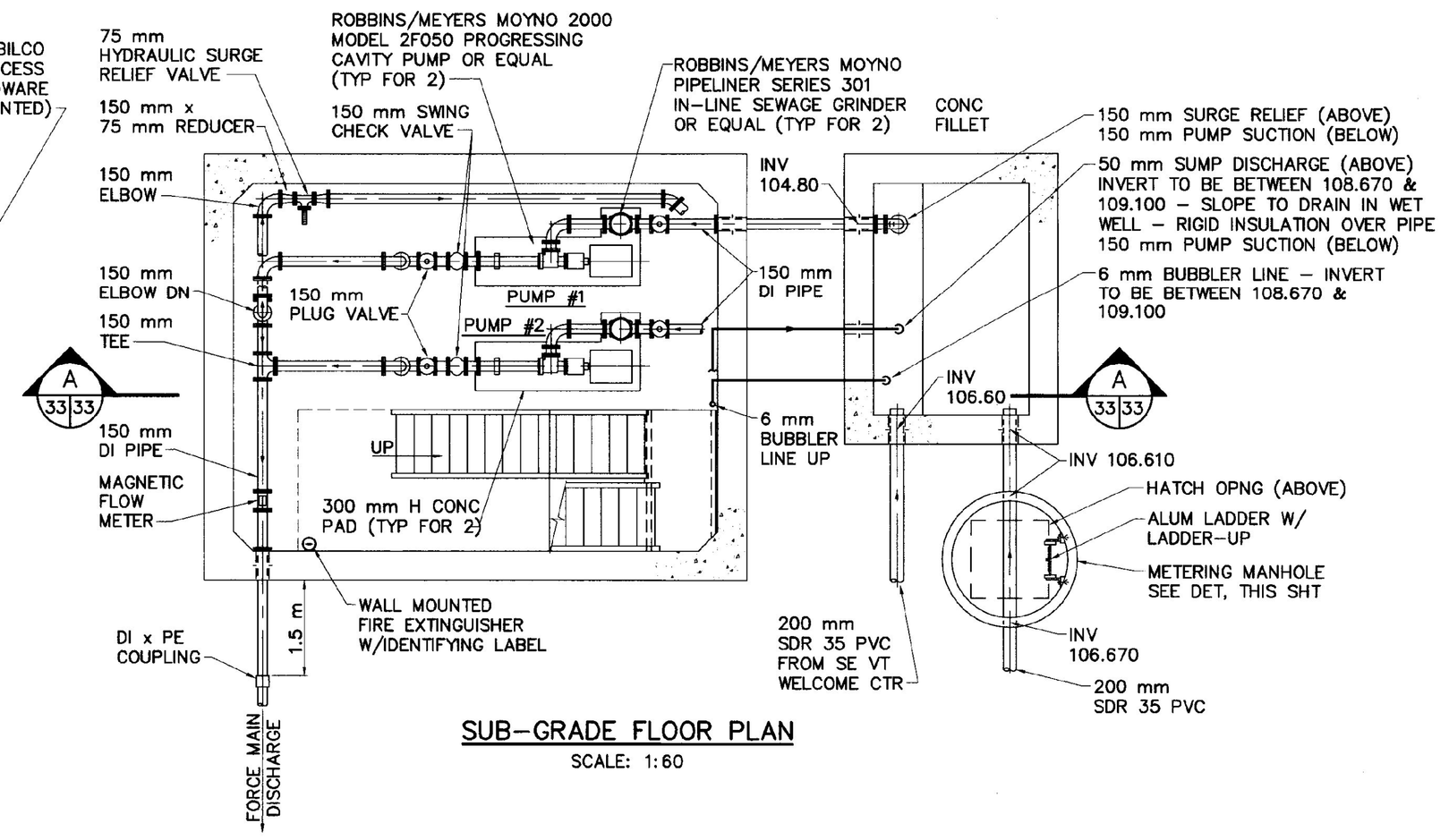

SUB-GRADE FLOOR PLAN
SCALE: 1:60

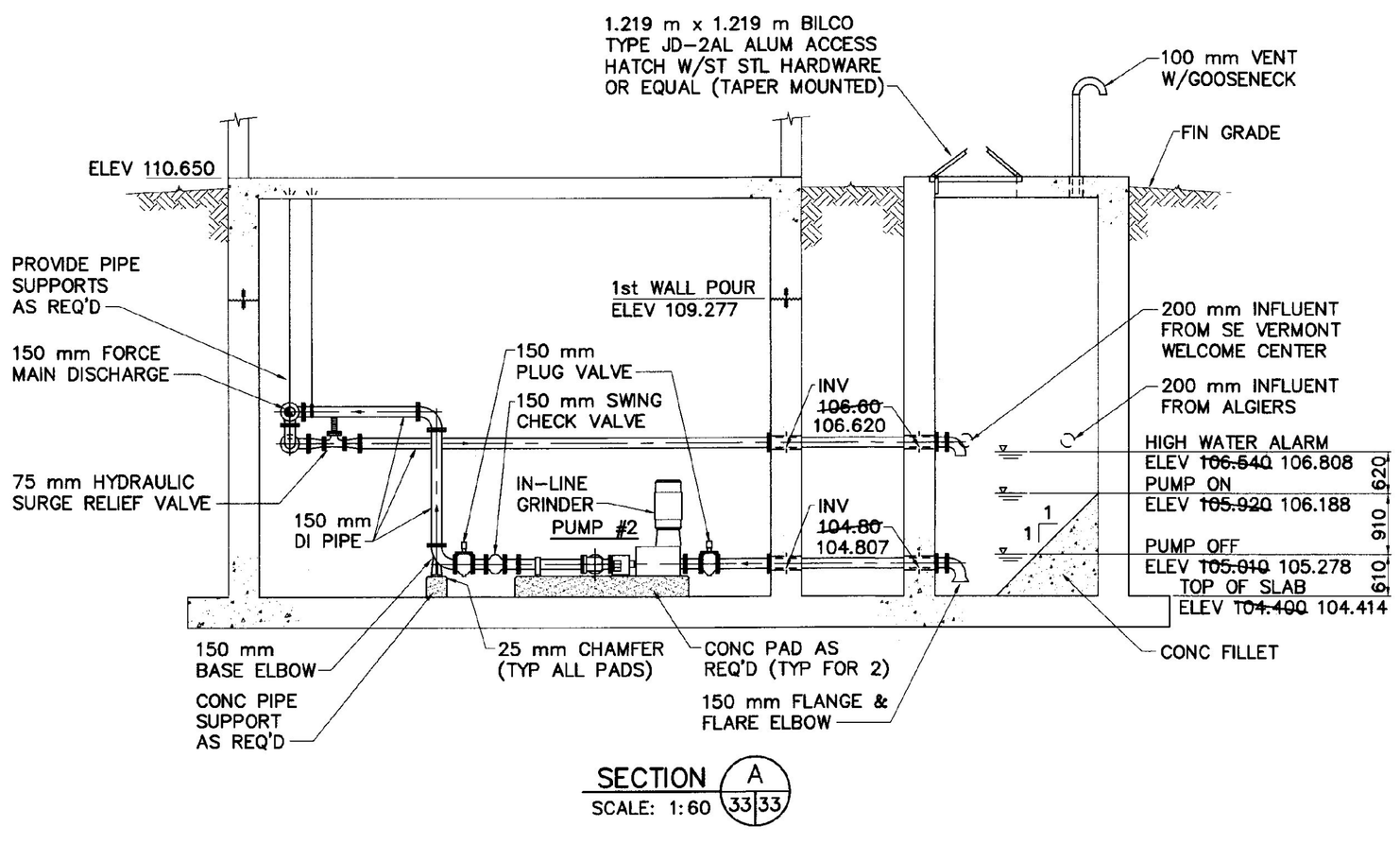

SECTION A 33 33
SCALE: 1:60

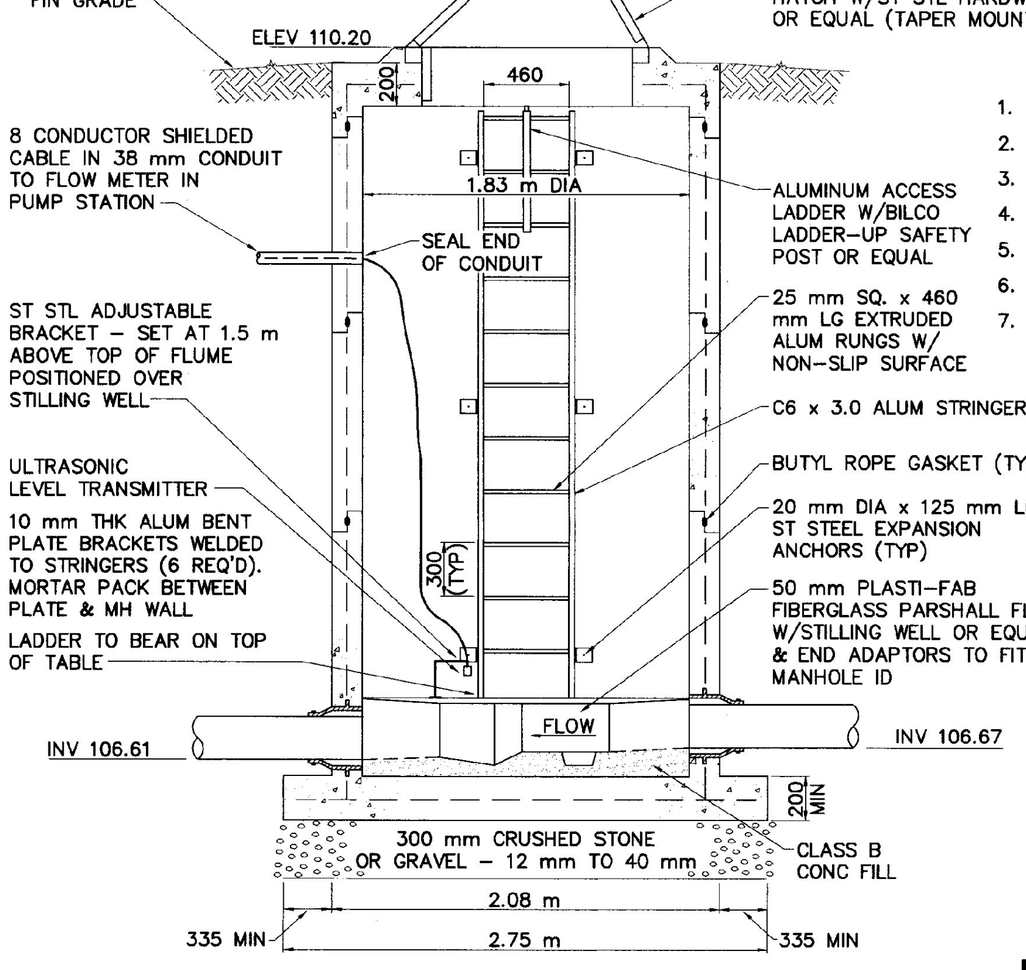

METERING MANHOLE DETAIL
NOT TO SCALE

NOTES:

1. 100 YR. HWL = 109.73 m
2. UNIT WEIGHT DRY = 1,282 kg/m^3 MIN
3. UNIT WEIGHT SATURATED = 1,602 kg/m^3 MIN
4. F.S. W/O SOIL FRICTION = 1.13
5. F.S. W/SOIL FRICTION = 2.36
6. SEE ALSO NOTE 10 ON SHEET 32
7. FOR ADDITIONAL MANHOLE INFORMATION SEE PRECAST MANHOLE DETAIL, SHT 34

RECORD DRAWING

SHOWN PICTORALLY
MAY NOT BE TO SCALE

THESE AS-BUILT OR RECORD DRAWINGS HAVE BEEN PREPARED, IN PART, ON THE BASIS OF INFORMATION COMPILED AND FURNISHED BY OTHERS. THE ENGINEER WILL NOT BE RESPONSIBLE FOR ANY ERRORS OR OMISSIONS WHICH HAVE BEEN INCORPORATED INTO THIS DOCUMENT AS A RESULT OF INFORMATION BY OTHERS.

VAOT Metric

NO.	DATE	REVISIONS	DRWN	CHKD
5	9/30/98	AS-BUILT INFORMATION ADDED	DSM	KAS
4	12/26/96	CONTRACT PLANS	DSM	MPY
3	11/11/96	FINAL REVIEW REVISIONS	DSM	MPY
2	6/4/96	REVISIONS PER REVIEW COMMENTS	DSM	MPY
1	4/8/96	REVISIONS PER REVIEW COMMENTS	DSM	MPY

TIMOTHY D. SMITH & ASSOCIATES, PC ARCHITECTS
OLD RAILROAD STATION NORTH BENNINGTON, VERMONT 05257
802-442-8184 FAX 802-442-5241
WRIGHT ENGINEERING, LTD. CIVIL ENGINEERS
128 MERCHANTS ROW – P.O. BOX 176 RUTLAND, VERMONT 05702-0176
802-775-2511 FAX 802-775-8915

STATE OF VERMONT KEVIN W. SMITH No. 5864 REGISTERED PROFESSIONAL ENGINEER 1998

PROJECT NO.IM 091-1 (29)
WATER & SEWER EXTENSION PROJECT
TOWN OF GUILFORD
TOWN OF BRATTLEBORO

SHEET TITLE: PUMP STATION PLANS, SECTIONS AND METERING MANHOLE DETAIL

DSGN BY: MPY
DRWN BY: DSM
CHKD BY: JAC
CHKD BY: MPY

STATE OF VERMONT
AGENCY OF TRANSPORTATION
SOUTHEAST VERMONT WELCOME CENTER
GUILFORD, VERMONT

DATE: 1-2-96 SHEET NO. 33 OF 55 SHEETS

C:\ACAD12\95013348 Fri Oct 9 13:34:22 1998

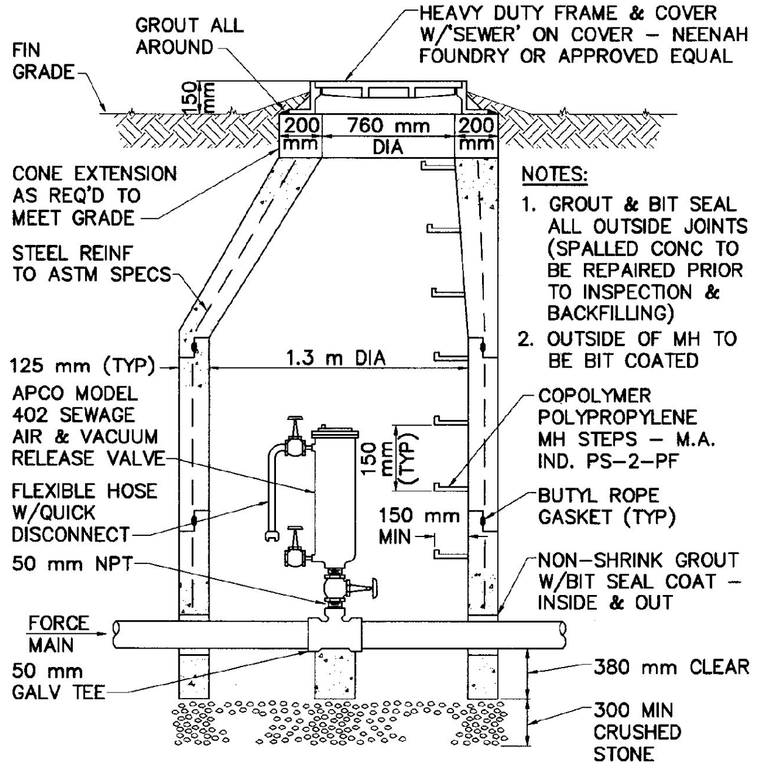

SEWAGE AIR RELEASE MANHOLE DETAIL

NOT TO SCALE

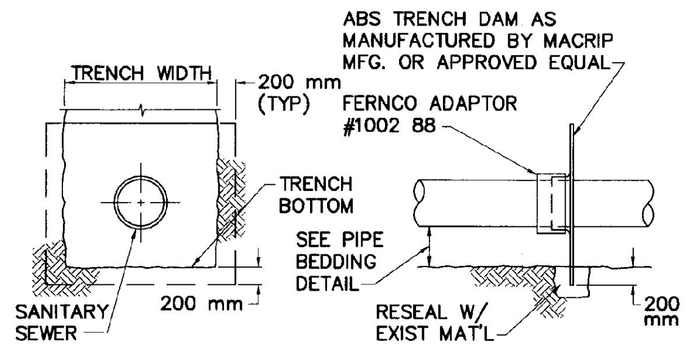

ABS PIPE TRENCH DAM DETAIL

NOT TO SCALE

(TO BE INSTALLED AT 15 m INTERVALS WHERE SLOPE EXCEEDS 0.08 m/m)

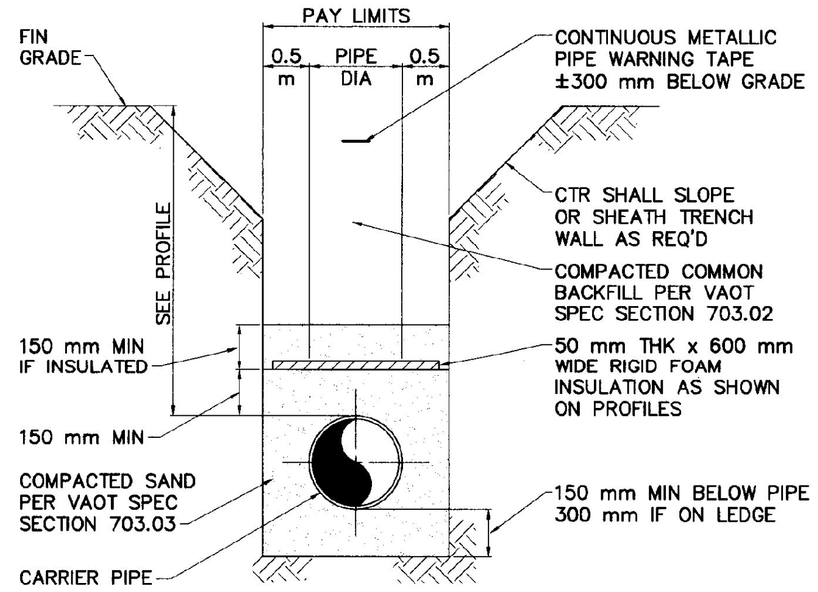

PIPE BEDDING DETAIL

NOT TO SCALE

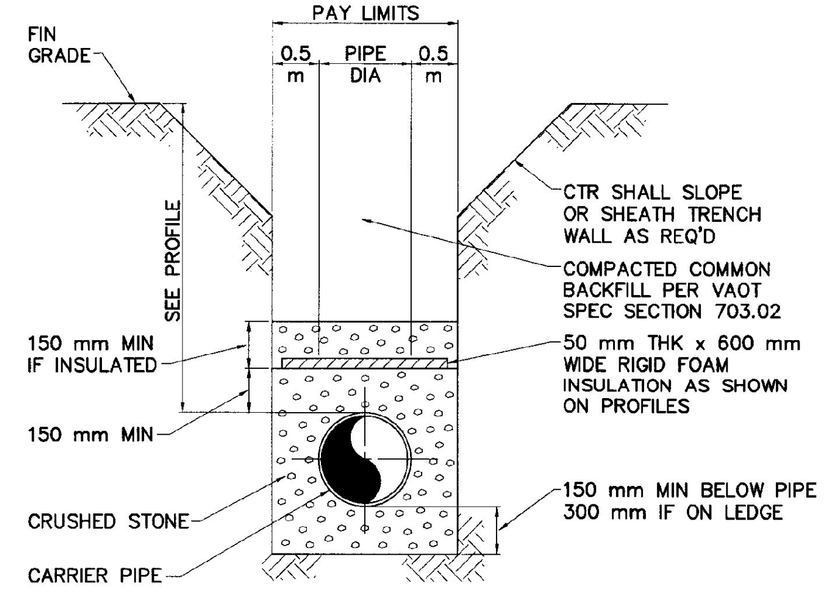

TRENCH DRAIN DETAIL

NOT TO SCALE

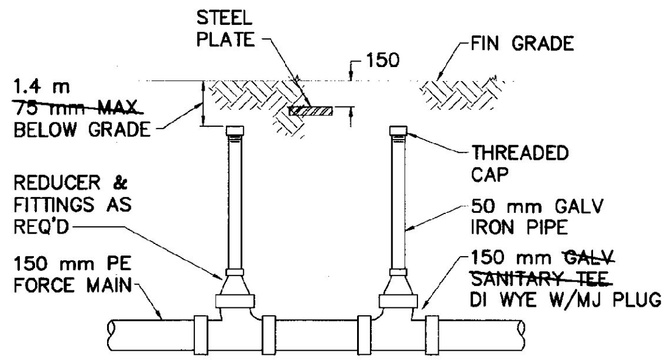

TYPICAL FORCE MAIN CLEANOUT DETAIL

NOT TO SCALE

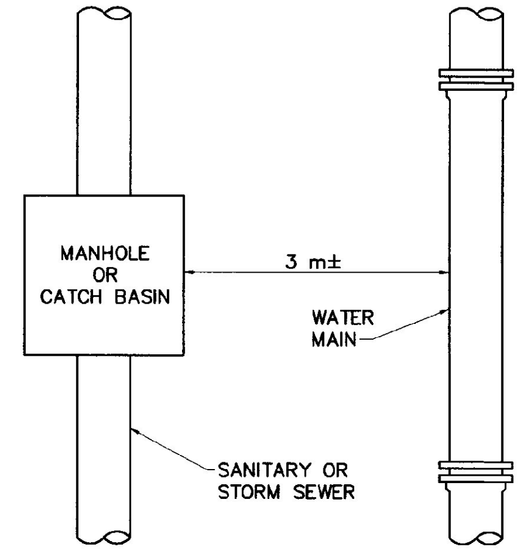

PARALLEL WATER/SEWER MAIN DETAIL

NOT TO SCALE

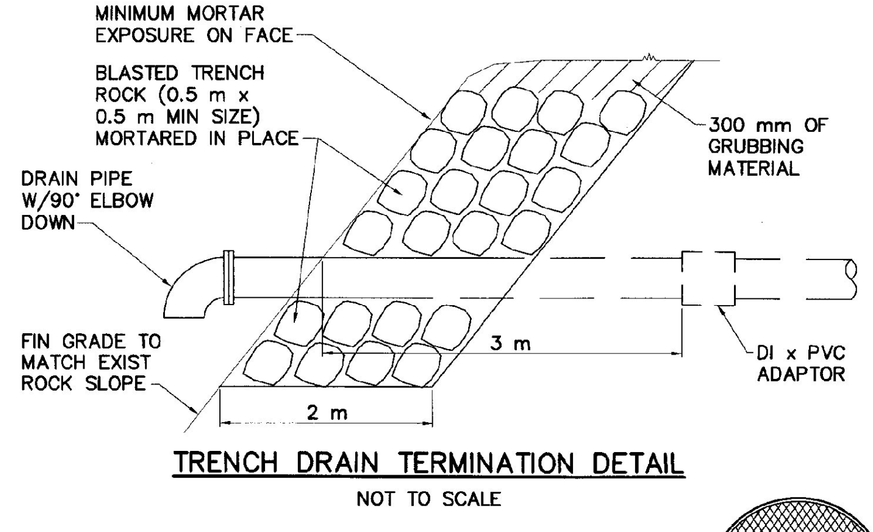

TRENCH DRAIN TERMINATION DETAIL

NOT TO SCALE

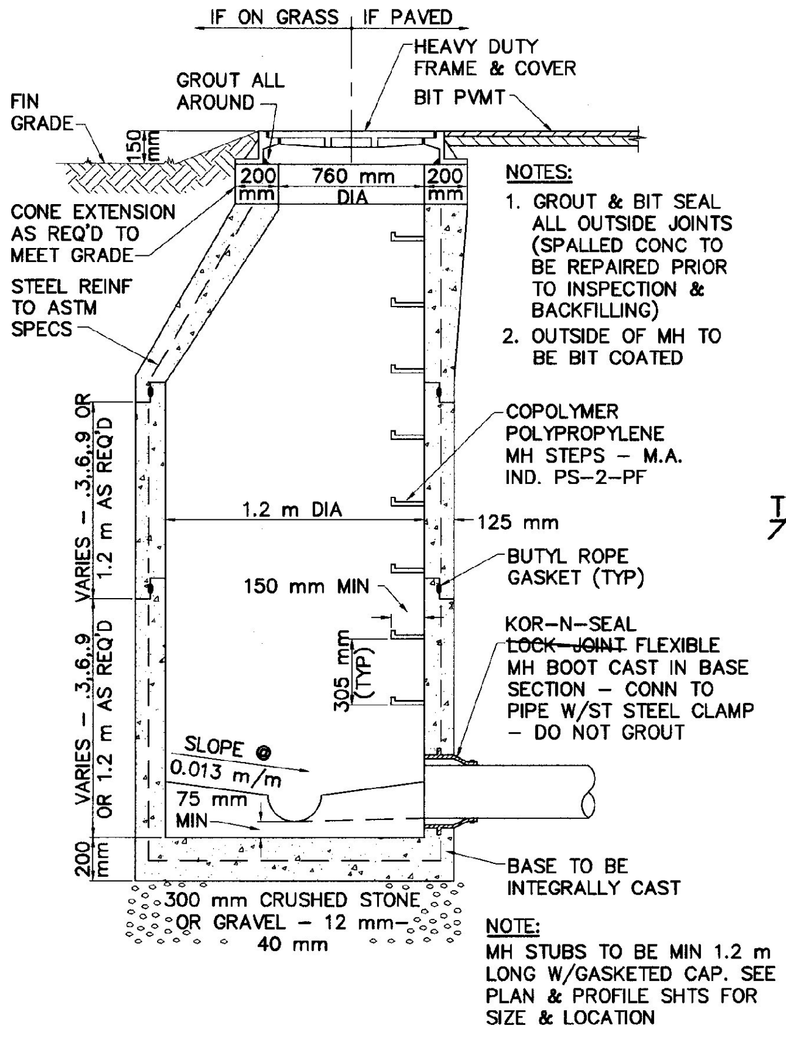

PRECAST MANHOLE DETAIL

NOT TO SCALE

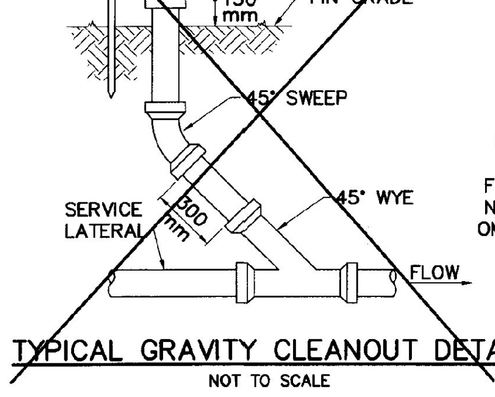

TYPICAL GRAVITY CLEANOUT DETAIL

NOT TO SCALE

RECORD DRAWING

SHOWN PICTORALLY
MAY NOT BE TO SCALE

THESE AS–BUILT OR RECORD DRAWINGS HAVE BEEN PREPARED, IN PART, ON THE BASIS OF INFORMATION COMPILED AND FURNISHED BY OTHERS. THE ENGINEER WILL NOT BE RESPONSIBLE FOR ANY ERRORS OR OMISSIONS WHICH HAVE BEEN INCORPORATED INTO THIS DOCUMENT AS A RESULT OF INFORMATION BY OTHERS.

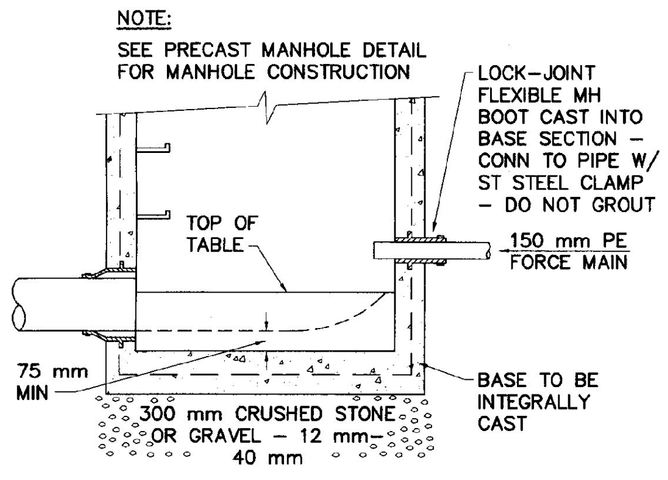

FORCE MAIN TERMINATION MANHOLE DETAIL

NOT TO SCALE

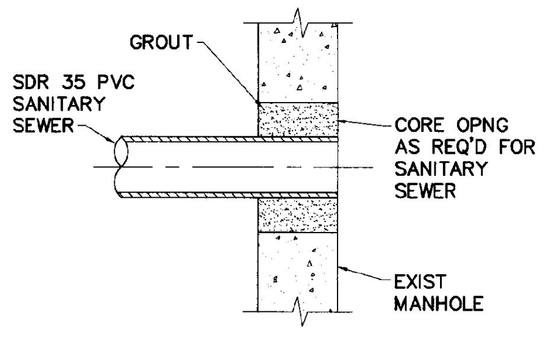

SEWER CONNECTION TO EXISTING MANHOLE DETAIL

NOT TO SCALE

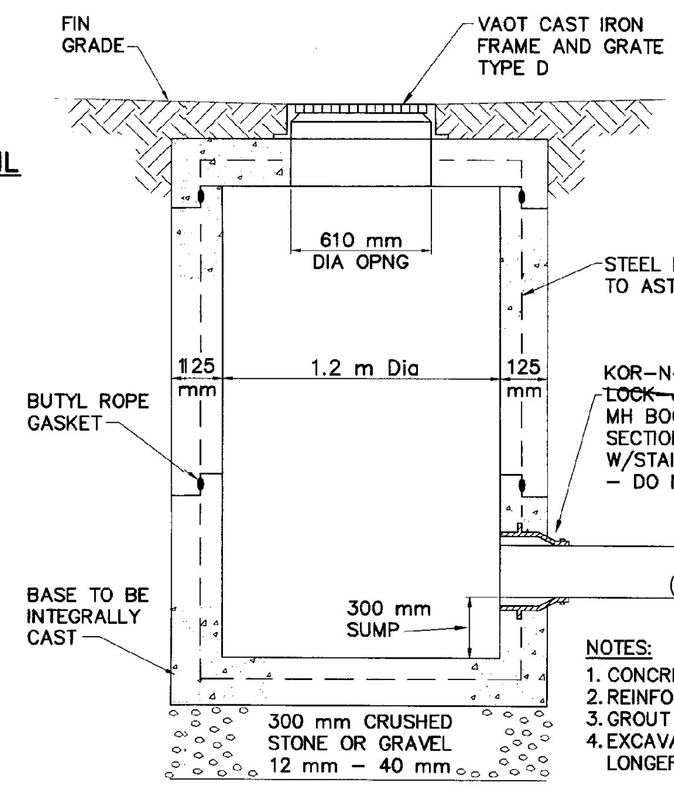

CATCH BASIN DETAIL

NOT TO SCALE

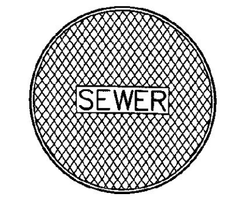

SANITARY MANHOLE COVER DETAIL

NOT TO SCALE

VAOT Metric

NO.	DATE	REVISIONS	DRWN	CHKD
5	9/30/98	AS–BUILT INFORMATION ADDED	DSM	KAS
4	12/26/96	CONTRACT PLANS	DSM	MPY
3	11/11/96	FINAL REVIEW REVISIONS	DSM	MPY
2	6/4/96	REVISIONS PER REVIEW COMMENTS	DSM	MPY
1	4/8/96	REVISIONS PER REVIEW COMMENTS	DSM	MPY

TIMOTHY D. SMITH & ASSOCIATES, PC ARCHITECTS
OLD RAILROAD STATION, NORTH BENNINGTON, VERMONT 05257
802-442-8184 FAX 802-442-5241
WRIGHT ENGINEERING, LTD. CIVIL ENGINEERS
128 MERCHANTS ROW – P.O. BOX 176, RUTLAND, VERMONT 05702-0176
802-775-2511 FAX 802-775-8915

STATE OF VERMONT KEVIN M. SMITH No. 5864 REGISTERED PROFESSIONAL ENGINEER

PROJECT NO.IM 091-1 (29)
WATER & SEWER EXTENSION PROJECT
TOWN OF GUILFORD
TOWN OF BRATTLEBORO

SHEET TITLE: MISCELLANEOUS DETAILS

DSGN BY: JAC
DRWN BY: DSM
CHKD BY: JAC
CHKD BY: MPY

STATE OF VERMONT
AGENCY OF TRANSPORTATION
SOUTHEAST VERMONT WELCOME CENTER
GUILFORD, VERMONT

DATE: 1-2-96
SHEET NO. 34 OF 55 SHEETS

C:\ACAD12\SOL1\950144B Fri Oct 9 13:37:22 1998

AREA OF BEARING FACE OF CONCRETE THRUST BLOCKS IN SQUARE METERS

PIPE SIZE (mm)	SOFT WET CLAY SAND OR SILT (48 kPa)	DRY SAND (192 kPa)	COMPACT COARSE SAND OR GRAVEL (287 kPa)
DEAD END, TEE OR VALVE (90°)			
200 OR LESS	1.3	.4	.3
250	1.9	.5	.4
300	2.6	.7	.5
400	4.5	1.1	.7
500	6.9	1.8	1.2
600	9.7	2.4	1.7
1/4 BEND (90°)			
200 OR LESS	1.7	.5	.3
250	2.6	.7	.5
300	3.7	.9	.7
400	6.3	1.6	1.1
500	9.7	2.4	1.7
600	13.7	3.4	2.3
1/8 BEND (45°)			
200 OR LESS	.9	.3	.2
250	1.5	.4	.3
300	2.0	.6	.4
400	3.3	.8	.6
500	5.2	1.3	.9
600	7.4	1.9	1.3
1/16 BEND (22 1/2°) AND SEWER MAIN SHT6			
200 OR LESS	.6	.2	.1
250	.7	.2	.2
300	1.1	.3	.2
400	1.9	.5	.4
500	2.8	.7	.5
600	3.7	.9	.7

1. FIGURES BASED ON 1380 kPa.
2. FOR PIPE SIZES NOT LISTED, USE NEXT LARGER PIPE SIZE.
3. WHEN MORE THAN ONE SOIL TYPE IS ENCOUNTERED, THE ONE WITH LEAST BEARING CAPACITY SHALL BE USED.
4. RETAINING RODS OR RESTRAINED JOINT PIPE AS APPROVED BY THE ENGINEER SHALL BE USED IN PLACE OF THRUST BLOCKS WHEN MUCK IS ENCOUNTERED.

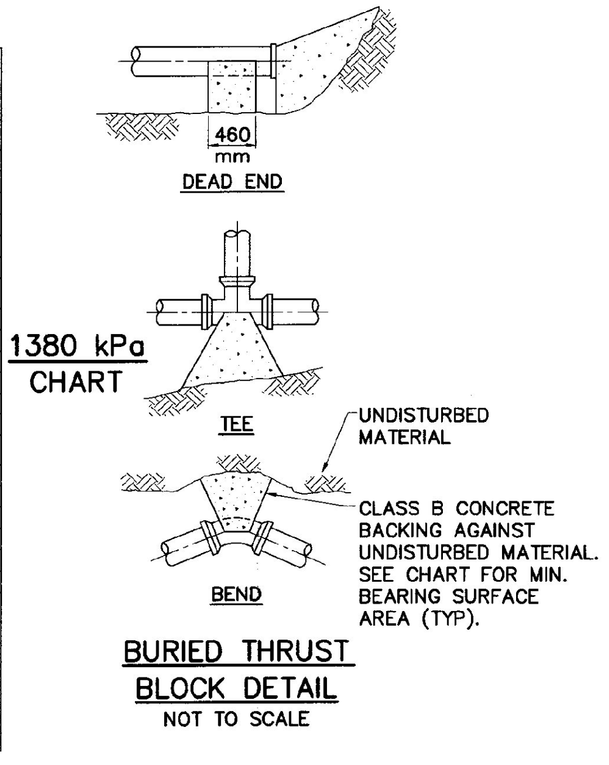

BURIED THRUST BLOCK DETAIL

NOT TO SCALE

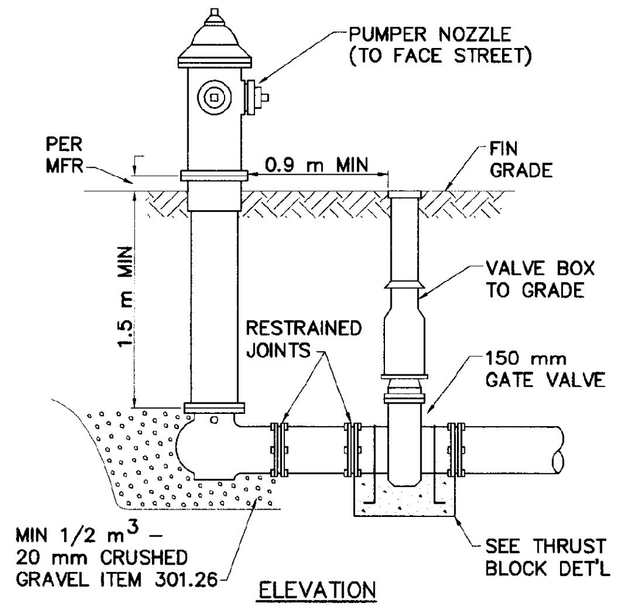

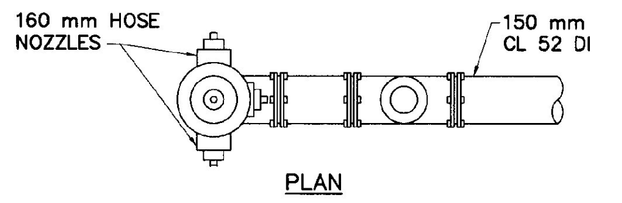

FIRE HYDRANT DETAIL

NOT TO SCALE

NOTE:
MINIMUM ROAD WIDTH SHOWN. PAVEMENT WIDTH TO EXTEND TO EXIST LIMITS WHERE GREATER THAN 6.4 m

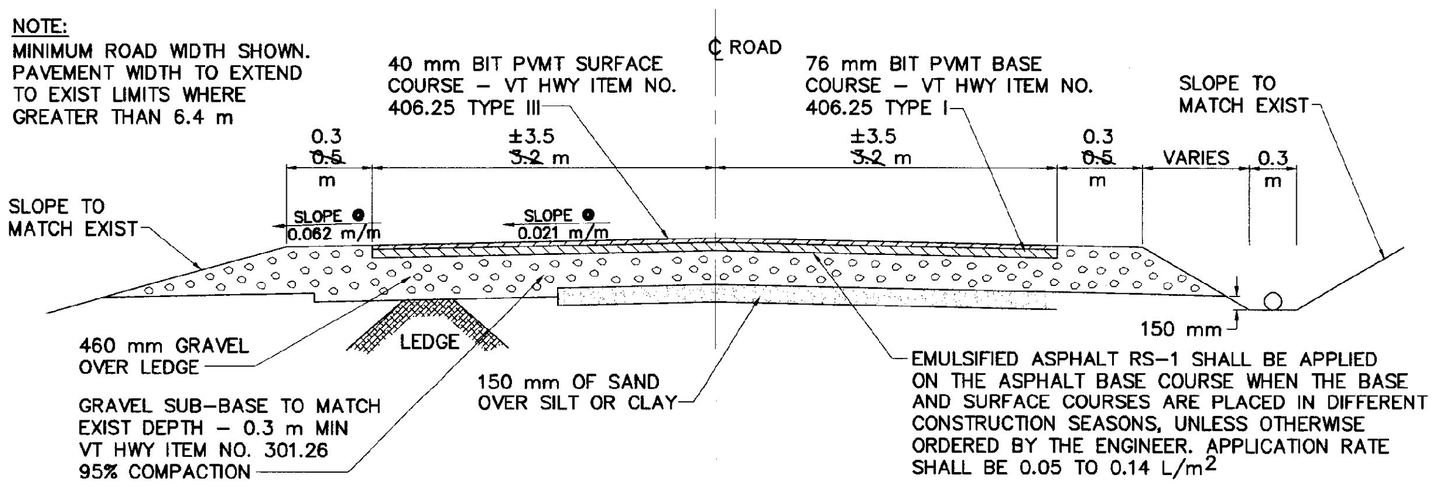

ROAD PAVEMENT REPLACEMENT DETAIL

NOT TO SCALE
(OLD GUILFORD ROAD)

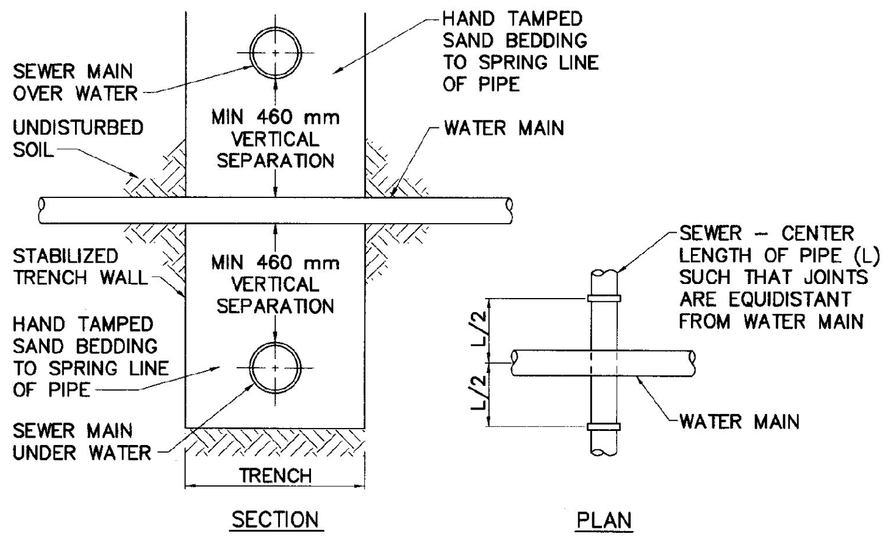

WATER MAIN/SEWER MAIN CROSSING NOTE

IF WATER MAIN IS LESS THAN 460 mm ABOVE SEWER MAIN OR IF SEWER MAIN IS ABOVE WATER MAIN, THE SEWER PIPE MUST BE CONSTRUCTED OF CL 50 DUCTILE IRON PIPE FOR A MINIMUM DISTANCE OF 6.1 m EITHER SIDE OF THE CROSSING OR A TOTAL OF THREE PIPE LENGTHS, WHICHEVER IS GREATER. THE SECTION CONSTRUCTED OF DUCTILE IRON PIPE MUST BE PRESSURE TESTED TO MAINTAIN 345 kPa FOR 15 MINUTES WITHOUT LEAKAGE PRIOR TO BACKFILLING BEYOND 0.3 METERS ABOVE THE PIPE TO ASSURE WATER TIGHTNESS.

WATER MAIN AND SEWER MAIN X-ING

NOT TO SCALE

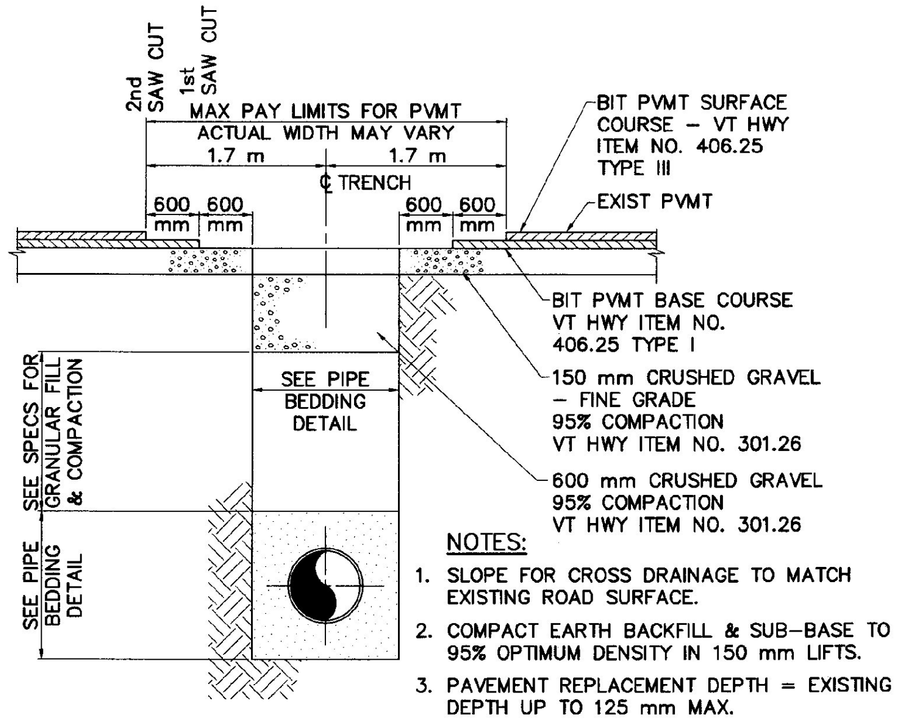

NOTES:

1. SLOPE FOR CROSS DRAINAGE TO MATCH EXISTING ROAD SURFACE.
2. COMPACT EARTH BACKFILL & SUB-BASE TO 95% OPTIMUM DENSITY IN 150 mm LIFTS.
3. PAVEMENT REPLACEMENT DEPTH = EXISTING DEPTH UP TO 125 mm MAX.
4. ALL SAW CUTS TO BE COATED WITH EMULSION (RS-1) PRIOR TO LAYING NEW BIT PVMT.

BITUMINOUS PAVEMENT REPAIR DETAIL

NOT TO SCALE

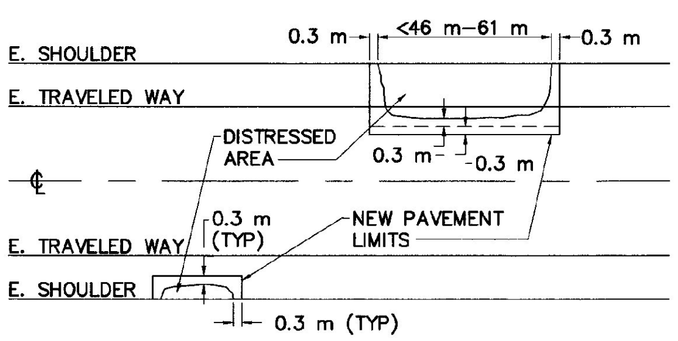

BITUMINOUS PAVEMENT REPLACEMENT DETAIL

NOT TO SCALE

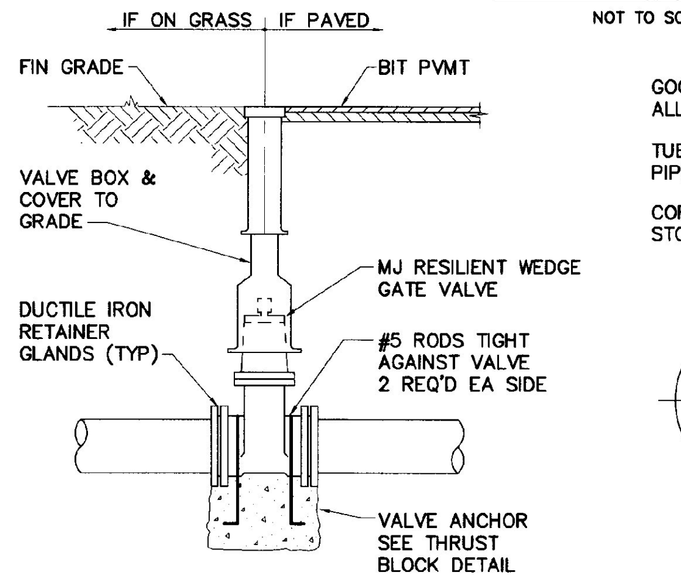

GATE VALVE DETAIL

NOT TO SCALE

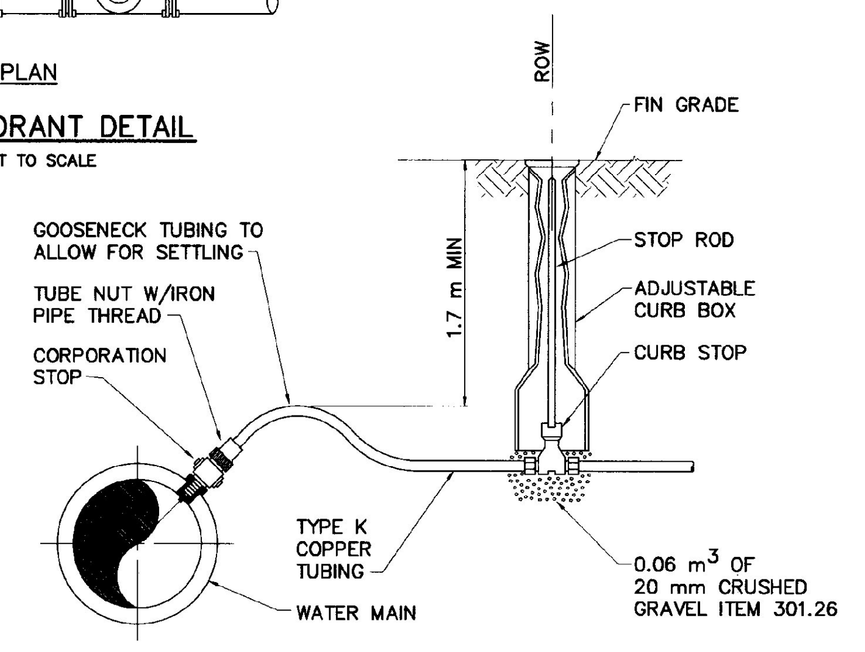

TYPICAL WATER SERVICE CONNECTION DETAIL

NOT TO SCALE

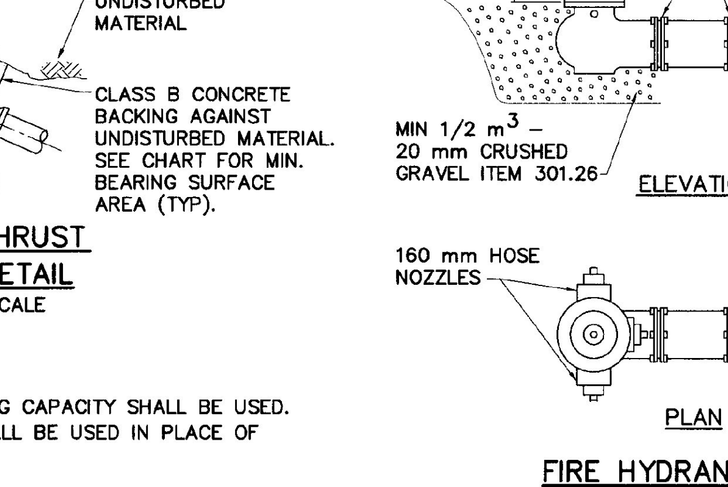

GRAVEL ROADWAY REPAIR DETAIL

NOT TO SCALE

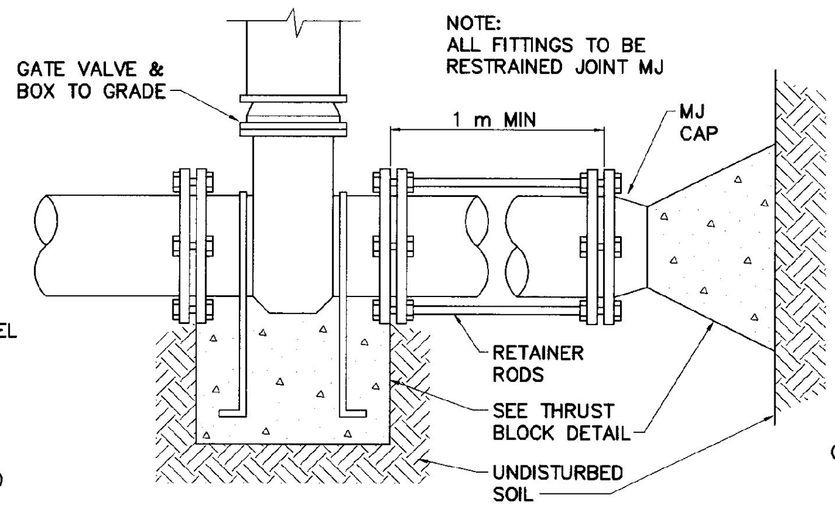

WATER MAIN TERMINATION DETAIL

NOT TO SCALE

RECORD DRAWING

SHOWN PICTORALLY
MAY NOT BE TO SCALE

THESE AS-BUILT OR RECORD DRAWINGS HAVE BEEN PREPARED, IN PART, ON THE BASIS OF INFORMATION COMPILED AND FURNISHED BY OTHERS. THE ENGINEER WILL NOT BE RESPONSIBLE FOR ANY ERRORS OR OMISSIONS WHICH HAVE BEEN INCORPORATED INTO THIS DOCUMENT AS A RESULT OF INFORMATION BY OTHERS.

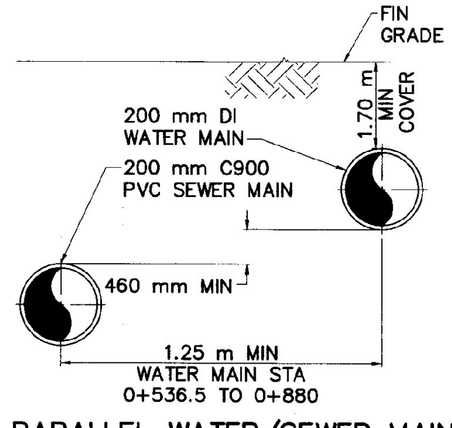

PARALLEL WATER/SEWER MAIN IN LEDGE DETAIL WHERE LESS THAN 3.05 m SEPARATION

NOT TO SCALE

VAOT Metric

NO.	DATE	REVISIONS	DRWN	CHKD
5	9/30/98	AS-BUILT INFORMATION ADDED	DSM	KAS
4	12/26/96	CONTRACT PLANS	DSM	MPY
3	11/11/96	FINAL REVIEW REVISIONS	DSM	MPY
2	6/4/96	REVISIONS PER REVIEW COMMENTS	DSM	MPY
1	4/8/96	REVISIONS PER REVIEW COMMENTS	DSM	MPY

TIMOTHY D. SMITH & ASSOCIATES, PC ARCHITECTS
OLD RAILROAD STATION, NORTH BENNINGTON, VERMONT 05257
802-442-8184, FAX 802-442-5241
WRIGHT ENGINEERING, LTD. CIVIL ENGINEERS
128 MERCHANTS ROW – P.O. BOX 176, RUTLAND, VERMONT 05702-0176
802-775-2511, FAX 802-775-8915

STATE OF VERMONT KEVIN N. SMITH No. 5864 REGISTERED PROFESSIONAL ENGINEER

PROJECT NO.IM 091-1 (29)
WATER & SEWER EXTENSION PROJECT
TOWN OF GUILFORD
TOWN OF BRATTLEBORO

SHEET TITLE: MISCELLANEOUS DETAILS

DSGN BY: JAC
DRWN BY: DSM
CHKD BY: JAC
CHKD BY: MPY

STATE OF VERMONT
AGENCY OF TRANSPORTATION
SOUTHEAST VERMONT WELCOME CENTER
GUILFORD, VERMONT

DATE: 1-2-96 SHEET NO. 35 OF 55 SHEETS

C:\ACAD12\3501\3501356.DWG Fri Oct 9 14:04:39 1998

SUB-SURFACE EXPLORATION

BORING NO.	DATE	OFFSET (m)	STATIC LEVEL	DEPTH (m)	SOIL IDENTIFICATION
SB-1	9/1/93	NONE	NONE	0-1.5 1.5-3	FINE SAND GRAVEL
SB-2	9/1/93	NONE	NONE	0-3	FINE BROWN SAND, TRACES OF SILT
SB-3	9/1/93	NONE	NONE	0-7.6	FINE BROWN SAND, FEW SMALL STONES (SMALL GRAVEL)
SB-4	9/1/93	NONE	NONE	0-7.6	FINE BROWN SAND, TRACES OF SILT, STONES (SMALL GRAVEL)
SB-5	9/1/93	NONE	NONE	0-4.6	FINE BROWN SAND, TRACES OF SILT
SB-6	9/1/93	NONE	NONE	0-.3 .3-3	GRAVEL FINE BROWN SAND, TRACES OF SILT
SB-7	9/1/93	NONE	NONE	0-0.3 0.3-3	GRAVEL FINE BROWN SAND, TRACES OF SILT
SB-8	9/1/93	NONE	NONE	0-3	FINE BROWN SAND, TRACES OF SILT
SB-9	9/1/93	NONE	NONE	0-3	FINE BROWN SAND, TRACES OF SILT
SB-10	9/1/93	NONE	NONE	0-2.1	FINE BROWN SAND, AUGER REFUSAL ON STONE AT 2.1
SB-11	9/1/93	NONE	NONE	0-2	FINE BROWN SAND, AUGER REFUSAL ON STONE AT 2
SB-11A	9/1/93	1.5 m N OF 11		0-1.7	FINE BROWN SAND, AUGER REFUSAL ON STONE AT 1.7
SB-12	9/1/93	NONE	NONE	0-3	FINE BROWN SAND, TRACES OF SILT, FEW SMALL STONES
SB-13	9/1/93	NONE	NONE	0-1	FINE BROWN SAND, TRACES OF SILT, AUGER REFUSAL ON STONE AT 1
SB-13A	9/1/93	6.1 m S OF 13		0-2.6	FINE BROWN SAND, TRACES OF SILT, FEW SMALL STONES, AUGER REFUSAL ON STONE AT 2.6
SB-14	9/1/93	NONE	NONE	0-2	FINE BROWN SAND, TRACES OF SILT, FEW SMALL STONES, AUGER REFUSAL ON STONE AT 2
SB-15	9/2/93	NONE	NONE	0-0.3 0.3-0.6	GRAVEL FINE TO MEDIUM SAND - AUGER FEFUSAL ON STONE AT 0.6
SB-15A	9/2/93	6.1 m S OF 15		0-0.3 0.3-0.6	GRAVEL FINE TO MEDIUM SAND - AUGER FEFUSAL ON STONE AT 0.6
SB-16	9/2/93	NONE	NONE	0-0.3 0.3-0.6	GRAVEL FINE TO MEDIUM SAND, AUGER REFUSAL ON STONE AT 0.6 - EXPOSED BEDROCK 3 m SOUTH OF SB-16
SB-17	9/2/93	NONE	NONE	0-1.5	SILTY FINE SAND, AUGER REFUSAL AT 1.5 - EXPOSED LEDGE 0.6 m EAST
SB-18	9/2/93	NONE	NONE	0-1.8	SILTY FINE SAND, AUGER REFUSAL ON STONE AT 1.8
SB-19	9/8/93	NONE	NONE	0-0.15 0.15-3	SILTY FINE BROWN SAND
SB-20	9/8/93	NONE	NONE	0-0.46	HARD PROBE W/REBAR TO REFUSAL AT 0.46 - MOVED 3 m EAST REBAR TO 0.6, REFUSAL ON STONE - EXPOSED BEDROCK NEARBY
SB-20A	10/13/93	NONE	NONE	0-3	SILT AND VERY FINE SAND, AUGER REFUSAL ON STONE AT 3
SB-20B	10/13/93	NONE	2.4	0-3.2	SILT AND VERY FINE SAND, AUGER REFUSAL ON STONE AT 3.2
SB-20C	10/13/93	NONE	NONE	0-3.5	SILT AND VERY FINE SAND, AUGER REFUSAL ON STONE AT 3.5
SB-20D	10/13/93	NONE	NONE	0-0.15 0.15-0.6 0.6-4	ROCK FILL, SILTY FINE SAND AUGER REFUSAL ON STONE AT 4
SB-20E	10/13/93	NONE	NONE	0-0.15 0.15-0.6 0.6-4.6	ROCK FILL, SILTY FINE SAND AUGER REFUSAL ON STONE AT 4.6
SB-20G	10/13/93	9 m W	1.8	0-4.3	SANDY SILT, AUGER REFUSAL ON STONE AT 4.3
SB-20H	10/13/93	9 m W	0.9	0-2.9	SANDY SILT, AUGER REFUSAL ON STONE AT 2.9
SB-20A1	10/13/93	15 m S OF 20A	NONE	0-2.4	SILTY FINE SAND, AUGER REFUSAL AT 2.4
SB-21	9/8/93	NONE		0-2.1	REBAR TO 2.1 - REFUSAL ON STONE - MOVED 3 m SOUTH REBAR TO 2 - REFUSAL ON STONE
SB-22	9/2/93	NONE	NONE	0-3	SILTY FINE SAND
SB-23	9/2/93	NONE	NONE	0-2.1	SILTY FINE SAND, AUGER REFUSAL ON STONE AT 2.1
SB-23A	9/2/93	1.5 m S OF 23	NONE	0-2.3	SILTY FINE SAND, AUGER REFUSAL ON STONE AT 2.3

BORING NO.	DATE	OFFSET (m)	STATIC LEVEL	DEPTH (m)	SOIL IDENTIFICATION
SB-24	9/2/93	NONE	NONE	0-0.6	SILTY FINE SAND, AUGER REFUSAL ON STONE AT 0.6 - EXPOSED BEDROCK OUTCROP 3 m SOUTH OF SB-24
SB-25	9/2/93	NONE	NONE	0-0.6	SILTY FINE SAND, AUGER REFUSAL ON STONE AT 0.6 - EXPOSED BEDROCK OUTCROP 6 m SOUTH OF SB-25
SB-26	9/2/93	NONE	NONE	0-0.6	SILTY FINE SAND, AUGER REFUSAL ON STONE AT 0.6 - EXPOSED BEDROCK
SB-27	9/2/93	NONE	NONE	0-1.5	SILTY FINE SAND, AUGER REFUSAL ON STONE AT 1.5
SB-28	9/2/93	NONE	NONE	0-3	SILTY FINE SAND
SB-29	9/2/93	NONE	NONE	0-3	SILTY FINE SAND
SB-30	9/2/93	NONE	NONE	0-0.3	GRAVEL, AUGER REFUSAL ON STONE AT 0.3 - EXPOSED BEDROCK
SB-31	9/2/93	NONE	NONE	0-1.2	SILTY FINE SAND, AUGER REFUSAL ON STONE AT 1.2
SB-31A	9/2/93	6 m S OF 31	2.4	0-3	SILTY FINE SAND
SB-32	9/2/93	NONE	NONE	0-3	SILTY FINE SAND
SB-33	9/2/93	NONE	NONE	0-3	SILTY FINE SAND
SB-34	9/2/93	NONE	NONE	0-3	SILTY FINE SAND
SB-35	9/2/93	NONE	NONE	0-3	SILTY FINE SAND, HARD PACKED - SLOW DRILLING
SB-36	9/8/93	NONE		0-1.2	REBAR TO 0.9, REFUSAL ON STONE MOVED 3 m SOUTH, REBAR TO 1.2 REFUSAL ON STONE
SB-36A	10/13/93	NONE	NONE	0-2.3	AUGER REFUSAL ON STONE AT 2.3 - BEDROCK OUTCROP NEARBY
SB-36B	10/13/93	NONE	NONE	0-4	SILTY FINE SAND, AUGER REFUSAL ON STONE AT 4
SB-36C	10/13/93	NONE	NONE	0-4	SILTY FINE SAND, AUGER REFUSAL ON STONE AT 4
SB-36A1	10/13/93	NONE	NONE	0-2.9	SILTY FINE SAND, AUGER REFUSAL ON STONE AT 2.9 - BEDROCK OUTCROP NEARBY
SB-36D1	10/13/93	15 M S OF 36D	NONE	0-0.15 0.15-0.6 0.6-4.4	ROCK FILL AUGER REFUSAL AT 4.4
SB-36E	10/13/93	NONE	3	0-0.15 0.15-0.6 0-4.6	ROCK FILL (ROAD BED) SILTY FINE SAND AUGER TO 4.6
SB-36G1	10/13/93	NONE	NONE	0-4.6	SILTY FINE SAND, AUGERED TO 4.6
SB-36H	10/13/93	NONE	NONE	0-4.6	SILTY FINE SAND, AUGERED TO 4.6
SB-38	9/8/93	NONE	NONE	0-1.2 0-1.4	REBAR TO 1.2, REFUSAL ON STONE - MOVED 3 m SOUTH REBAR TO 1.4, REFUSAL ON STONE
SB-39	9/8/93	NONE		0-1.5 0-1.2	REBAR TO 1.5, REFUSAL ON STONE - MOVED 3 m SOUTH REBAR TO 1.2, REFUSAL ON STONE
SB-40	9/2/93	NONE	NONE	0-3	SILTY FINE BROWN SAND, VERY DENSE SLOW DRILLING
SB-41	9/2/93	NONE	NONE	0-3	SILTY FINE BROWN SAND, FEW STONES, VERY DENSE, SLOW DRILLING
SB-43	9/2/93	NONE	NONE	0-3.6	SILTY FINE BROWN SAND, FEW STONES
SB-45	9/2/93	NONE	NONE	0-3.6	SILTY FINE BROWN SAND, FEW STONES
SB-47	9/2/93	NONE	NONE	0-3	SILTY FINE BROWN SAND, FEW STONES, VERY DENSE, SLOW DRILLING
SB-49	9/2/93	NONE	4	0-3	SILTY FINE BROWN SAND, FEW STONES ON HARD ROCK
SB-50	9/2/93	NONE	NONE	0-3	SILTY FINE BROWN SAND, FEW STONES, SMALL GRAVEL
SB-51	9/8/93	NONE	2.4	0-2.1 2.1-3	SILT WITH FEW STONES GREY
SB-52	9/8/93		2.1	0-3	GRAVEL INTO A GREY SILT
SB-53	9/8/93	NONE	NONE	0-0.9 0-1.8 1.8-3	AUGER REFUSAL AT 0.9 (STONE) - MOVED RIG 3 m SOUTH GRAVEL GREY SILT
SB-54	9/8/93	NONE	4.6	0-1.8 1.8-3.6 3.6-5.8	GRAVEL GREY SILT HARD PAN

BORING NO.	DATE	OFFSET (m)	STATIC LEVEL	DEPTH (m)	SOIL IDENTIFICATION
WE-1	4/24/95	NONE	NONE	0-2.1 2.1-6.1	MOIST BROWN SILTY SAND (A-2-4) MOIST BROWN SANDY GRAVEL (A-1-b) NLTD
WE-2	4/24/95	NONE	NONE	0-9.1	MOIST BROWN SAND (A-3) - NLTD
WE-3	4/24/95	NONE	NONE	0-2.0 2.0-3	MOIST BROWN GRAVELY SAND (A-1-b) MOIST BROWN SILTY SAND (A-4) NLTD
WE-4	4/24/95	NONE	NONE	0-3	MOIST BROWN GRAVELY SAND (A-2-4) NLTD
WE-5	4/24/95	NONE	NONE	0-2.7	MOIST TO WET BROWN GRAVEL LEDGE OR BOULDER AT 2.7
WE-6	4/24/95	NONE	NONE	0-2.1	MOIST TO WET BROWN SILTY SAND (A-2-4) LEDGE OR BOULDER AT 2.1
WE-7	4/24/95	NONE	NONE	0-1.5 1.5-3	MOIST TO WET BROWN GRAVEL SATURATED BROWN SILTY SAND (A-4) NLTD
WE-8	4/24/95	NONE	NONE	0-0.75	MOIST BROWN GRAVEL LEDGE OR BOULDER AT 0.75
WE-9	4/24/95	NONE	NONE	0-0.8	MOIST BROWN GRAVEL LEDGE OR BOULDER AT 0.8
WE-10	4/24/95	NONE	NONE	0-1.2 1.2-2.3	MOIST BROWN SILTY GRAVELY SAND (A-1-b) MOIST BROWN GRAVELY SANDY SILT (A-4) LEDGE OR BOULDER AT 2.3
WE-11	4/24/95	NONE	NONE	0-0.9 0.9-2.4	MOIST BROWN SANDY GRAVEL (A-1-a) MOIST GREY GRAVELY SILTY SAND (A-2-4) LEDGE OR BOULDER AT 2.4
WE-12	4/24/95	NONE	NONE	0-0.9 0.9-2.7	MOIST BROWN SANDY GRAVEL (A-1-a) MOIST BROWN GRAVELY SILTY SAND (A-2-4) LEDGE OR BOULDER AT 2.7
WE-13	4/24/95	NONE	NONE	0-0.35	MOIST BROWN GRAVEL LEDGE OR BOULDER AT 0.35
WE-14	4/24/95	NONE	NONE	0-1.1 1.1-3	MOIST BROWN SILTY SAND (A-2-4) MOIST BROWN SILTY SAND (A-1-b) NLTD
WE-15	4/24/95	NONE	NONE	0-1.1 1.1-3	MOIST BROWN SILTY SAND MOIST BROWN SILT - NLTD
WE-16	4/24/95	NONE	NONE	0-0.6	MOIST BROWN SILT LEDGE OR BOULDER AT 0.6
WE-17	4/24/95	NONE	NONE	0-0.6	MOIST BROWN SILT LEDGE OR BOULDER AT 0.6
WE-18	4/24/95	NONE	NONE	0	LEDGE SHOWING
WE-19		NONE	NONE	0-1.1	MOIST BROWN SILT LEDGE OR BOULDER AT 1.1
WE-20	4/24/95	NONE	NONE	0-0.6 0.6-2.4	MOIST (ROCK FILL) MOIST GREY SILTY SAND (A-4) LEDGE OR BOULDER AT 2.4
WE-21	4/24/95	NONE	NONE	0-1.4 1.4-2	MOIST TO WET BROWN SILTY GRAVELY SAND (A-2-4) MOIST BROWN SILTY SAND (A-4) LEDGE OR BOULDER AT 2.4
WE-22	4/24/95	NONE	NONE	0-1.5 1.5-3	MOIST BROWN GRAVELY SAND (A-1-b) MOIST TO WET BROWN SAND (A-4) NLTD
WE-23	4/24/95	NONE	NONE	0-0.9 0.9-3	MOIST BROWN SILTY SAND (A-4) MOIST GREY SILTY SAND (A-4) - NLTD
WE-24	4/24/95	NONE	NONE	0-0.6 0.6-3	MOIST BROWN SILT MOIST GREY SILTY SAND (A-2-4) NLTD
WE-25	4/24/95	NONE	NONE	0-0.6 0.6-3	MOIST BROWN SILTY SAND (A-4) MOIST GREY SILTY SAND - NLTD
WE-26	4/24/95	NONE	NONE	0-0.5 0.5-3	MOIST BROWN SILT MOIST GREY SILTY SAND - NLTD
WE-27	4/24/95	NONE	NONE	0-2.1 2.1-3.7	MOIST BROWN SANDY SILT (A-4) MOIST BROWN SANDY SILT (A-4) NLTD
WE-28	4/24/95	NONE	NONE	0-1.2 1.2-3	MOIST TO WET BROWN GRAVELY SILTY SAND (A-2-4) WET BROWN GRAVELY SAND (A-1-b) NLTD
WE-29	4/24/95	NONE	NONE	0-3.2	MOIST BROWN GRAVELY SAND (A-1-b) NLTD
WE-30	4/24/95	NONE	NONE	0-3.2	MOIST BROWN GRAVELY SAND (A-1-b) NLTD
WE-31	4/24/95	NONE	NONE	0-2.1 2.1-3.2	MOIST BROWN SAND (A-2-4) WET BROWN SAND (A-2-4) NLTD

NOTES:

1. FOR BORINGS AT PUMP STATION SITE SEE SHT 37
2. BORINGS DESIGNATED WITH 'SB' WERE DONE BY GREEN MTN. BORING FOR DUBOIS & KING INC., BORINGS DESIGNATED WITH 'WE' WERE DONE BY THE AGENCY OF TRANSPORTATION FOR WRIGHT ENGINEERING, LTD, EXCEPT WE-37 THROUGH WE-40 PERFORMED BY M & W SOILS ENGINEERING.

RECORD DRAWING

SHOWN PICTORALLY
MAY NOT BE TO SCALE

THESE AS-BUILT OR RECORD DRAWINGS HAVE BEEN PREPARED, IN PART, ON THE BASIS OF INFORMATION COMPILED AND FURNISHED BY OTHERS. THE ENGINEER WILL NOT BE RESPONSIBLE FOR ANY ERRORS OR OMISSIONS WHICH HAVE BEEN INCORPORATED INTO THIS DOCUMENT AS A RESULT OF INFORMATION BY OTHERS.

VAOT Metric

NO.	DATE	REVISIONS	DRWN	CHKD
5	9/30/98	NO AS-BUILT INFORMATION ADDED	DSM	KAS
4	12/26/96	CONTRACT PLANS	DSM	MPY
3	11/11/96	FINAL REVIEW REVISIONS	DSM	MPY
2	6/4/96	REVISIONS PER REVIEW COMMENTS	DSM	MPY
1	4/8/96	REVISIONS PER REVIEW COMMENTS	DSM	MPY

TIMOTHY D. SMITH & ASSOCIATES, PC ARCHITECTS
OLD RAILROAD STATION, NORTH BENNINGTON, VERMONT 05257
802-442-8184, FAX 802-442-5241
WRIGHT ENGINEERING, LTD. CIVIL ENGINEERS
128 MERCHANTS ROW - P.O. BOX 176, RUTLAND, VERMONT 05702-0176
802-775-2511, FAX 802-775-8915

STATE OF VERMONT KEVIN R. SMITH No. 5964 REGISTERED PROFESSIONAL ENGINEER

PROJECT NO.IM 091-1 (29)
WATER & SEWER EXTENSION PROJECT
TOWN OF GUILFORD
TOWN OF BRATTLEBORO

SHEET TITLE: SUB-SURFACE EXPLORATION

DSGN BY: JAC
DRWN BY: DSM
CHKD BY: JAC
CHKD BY: MPY

STATE OF VERMONT
AGENCY OF TRANSPORTATION
SOUTHEAST VERMONT WELCOME CENTER
GUILFORD, VERMONT

DATE: 1-2-96 SHEET NO. 36 OF 55 SHEETS

C:\ACAD12\950\1950136B Fri Oct 9 14:41:26 1998

SUB-SURFACE EXPLORATION

BORING NO.	DATE	OFFSET (m)	STATIC LEVEL	DEPTH (m)	SOIL IDENTIFICATION
WE-32	4/5/95	NONE	1.5	0-0.6	MOIST BROWN GRAVELLY SAND (A-1-b)
				0.6-1.2	MOIST BROWN SILTY SAND (A-2-4)
				1.2-1.8	MOIST BROWN GRAVELLY SAND (A-1-b)
				1.8-2.1	MOIST BROWN SANDY GRAVEL (A-1a)
				2.1-2.4	GRAY SANDY SILT (A-4)
				2.4-3.0	MOIST GRAY SANDY SILT (A-4)
				3.0-3.5	MOIST GRAY GRAVELLY SANDY SILT (A-4) LEDGE OR BLDR @ 3.5
WE-33	3/29/95	NONE	NONE	0-0.6	MOIST BROWN SAND (A-2-4)
				0.6-1.2	MOIST BROWN SAND (A-2-4)
				1.2-1.8	WET GRAY GRAVELLY SAND (A-1-b)
				1.8-2.1	WET GRAY GRAVELLY SILTY SAND (A-2-4)
				2.1-2.4	WET GRAY SANDY SILT (A-4)
				2.4-3.0	MOIST GRAY SILTY SAND (A-4)
				3.0-4.1	MOIST GRAY SANDY SILT (A-4) LEDGE OR BLDR @ 4.1
WE-34	3/30/95	NONE	1.2	0-0.6	MOIST BROWN SILTY SAND (A-2-4)
				0.6-1.2	MOIST BROWN SANDY GRAVEL (A-1-b)
				1.2-1.8	MOIST BROWN SANDY GRAVEL (A-1-a)
				1.8-2.6	MOIST GRAY GRAVELLY SILTY SAND (A-2-4) BEDROCK @ 2.6
WE-35	3/29/95	NONE	NONE	0-0.6	MOIST BROWN SILTY SAND (A-2-4)
				0.6-1.2	MOIST GRAY SAND (A-2-4)
				1.2-1.8	MOIST GRAY SANDY GRAVEL (A-1-a)
				1.8-2.4	NO SAMPLE
				2.4-2.6	MOIST BROWN GRAVELLY SANDY SILT (A-4) LEDGE OR BLDR @ 2.6
WE-36	4/5/95	NONE	0.6	0-0.6	MOIST BROWN GRAVELLY SAND (A-1-b)
				0.6-1.2	MOIST BROWN GRAVELLY SAND (A-1-b)
				1.2-1.8	MOIST BROWN SANDY GRAVEL (A-1-a) LEDGE OR BLDR @ 1.8
WE-37	8/1/95	L 1.5	NONE	0-0.08	TOPSOIL
				0.08-3.0	DRY BROWN MED FINE SAND - TRACE OF SILT
WE-38	8/1/95	L 3.65	NONE	0-0.6	BROWN GRAVELLY SILTY MED FINE SAND
				0.6-1.1	WEATHED ROCK - REFUSAL TO AUGERS
WE-38A	8/1/95	1.2 S	NONE	0-0.7	BROWN GRAVELLY SILTY MED FINE SAND
				0.7-2.3	DRILLED ROCK
WE-39	8/1/95	R 0.3	3.35	0-0.09	ASPHALT PAVEMENT
				0.09-1.0	DRY DARK BROWN GRAVELLY COARSE TO FINE SAND
				1.0-2.0	MOIST BROWN FINE SAND & SILT - TRACES OF ORGANICS
				2.0-2.6	GREY SILTY MEDIUM FINE SAND
				2.6-4.6	GREY SOFT PHYLLITE ROCK - DRILLED ROCK FROM 2.6 TO 4.6
WE-40	8/1/95	R 3.65	0.74	0-0.15	MOIST BLACK SILT
				0.15-0.8	WET GREYISH BROWN SILTY FINE SAND TRACE OF GRAVEL @ 0.8
				0.8-3.0	WET GREY SILTY FINE SAND W/OCCASIONAL 3 mm SILT & CLAY LAYER - NLTD

NOTES:

1. FOR BORINGS AT PUMP STATION SITE SEE THIS SHT
2. BORINGS DESIGNATED WITH 'SB' WERE DONE BY GREEN MTN. BORING FOR DUBOIS & KING INC., BORINGS DESIGNATED WITH 'WE' WERE DONE BY THE AGENCY OF TRANSPORTATION FOR WRIGHT ENGINEERING, LTD, EXCEPT WE-37 THROUGH WE-40 PERFORMED BY M & W SOILS ENGINEERING.

RECORD DRAWING

SHOWN PICTORALLY
MAY NOT BE TO SCALE

THESE AS-BUILT OR RECORD DRAWINGS HAVE BEEN PREPARED, IN PART, ON THE BASIS OF INFORMATION COMPILED AND FURNISHED BY OTHERS. THE ENGINEER WILL NOT BE RESPONSIBLE FOR ANY ERRORS OR OMISSIONS WHICH HAVE BEEN INCORPORATED INTO THIS DOCUMENT AS A RESULT OF INFORMATION BY OTHERS.

VAOT Metric

NO.	DATE	REVISIONS	DRWN	CHKD
5	9/30/98	NO AS-BUILT INFORMATION ADDED	DSM	KAS
4	12/26/96	CONTRACT PLANS	DSM	MPY
3	11/11/96	FINAL REVIEW REVISIONS	DSM	MPY
2	6/4/96	REVISIONS PER REVIEW COMMENTS	DSM	MPY
1	4/8/96	REVISIONS PER REVIEW COMMENTS	DSM	MPY

TIMOTHY D. SMITH & ASSOCIATES, PC ARCHITECTS
OLD RAILROAD STATION NORTH BENNINGTON, VERMONT 05257
802-442-8184 FAX 802-442-5241
WRIGHT ENGINEERING, LTD. CIVIL ENGINEERS
128 MERCHANTS ROW - P.O. BOX 176 RUTLAND, VERMONT 05702-0176
802-775-2511 FAX 802-775-8915

STATE OF VERMONT KEVIN A. SMITH No. 5884 REGISTERED PROFESSIONAL ENGINEER

PROJECT NO.IM 091-1 (29)
WATER & SEWER EXTENSION PROJECT
TOWN OF GUILFORD
TOWN OF BRATTLEBORO

SHEET TITLE: SUB-SURFACE EXPLORATION

DSGN BY: JAC
DRWN BY: DSM
CHKD BY: JAC
CHKD BY: MPY

STATE OF VERMONT
AGENCY OF TRANSPORTATION
SOUTHEAST VERMONT WELCOME CENTER
GUILFORD, VERMONT

DATE: 1-2-96 SHEET NO. 37 OF 55 SHEETS

C:\ACAD12\950\1950137A8 Fri Oct 9 14:30:19 1998

ELECTRICAL SYMBOL LIST

* NOT ALL DEVICES ARE NECESSARILY USED

- A — FLUORESCENT STRIP FIXTURE
- B — WALL BRACKET
- C — EXTERIOR, WALL MTD. FIXTURE.
- D — RECESSED, FLUORESCENT FIXTURE
- G — CEILING FIXTURE
- BU — EMERGENCY BATTERY UNIT, NO ATTACHED HEADS
- BU — EMERGENCY BATTERY UNIT, ATTACHED HEADS
- EXIT SIGN, SELF POWERED
- EXIT SIGN, SELF POWERED, WALL MOUNTED
- S — SINGLE POLE SWITCH 20 AMP 125 VOLT TOGGLE
- S_3 — 3-WAY SWITCH 20 AMP 125 VOLT TOGGLE
- S_4 — 4-WAY SWITCH 20 AMP 125 VOLT TOGGLE
- S_P — PILOT LIGHT SWITCH 20 AMP 125 VOLT TOGGLE, FLUSH MOUNT SEE NOTES AT DEVICE FOR SPECIFIC MOUNTING INSTRUCTIONS
- SOB — OIL BURNER SHUT OFF SWITCH.
- DUPLEX RECEPTACLE 20 AMP 125 VOLT
- DUPLEX RECEPTACLE ABOVE COUNTER AND BACKSPLASH, VERIFY FINAL MOUNTING HEIGHT ON SITE PRIOR TO ROUGH IN.
- DUPLEX RECEPTACLE, SPLIT WIRED, TOP HALF SWITCH CONTROLLED
- DOUBLE DUPLEX RECEPTACLE, INSTALL IN 2-GANG BOX UNDER ONE 2-GANG PLATE, WIRE TO COMMON CIRCUIT AS SHOWN
- WP — DUPLEX RECEPTACLE WITH WEATHERPROOF, GASKETED COVER
- GF — GROUND FAULT TYPE DUPLEX RECEPTACLE, 20 AMP 125 VOLT CLASS A WITH 20 AMP FEED THROUGH RATING, PLATE TO MATCH OTHER DEVICES INSTALL IN SEPARATE SINGLE GANG BOX WHERE SHOWN ON PLANS (MIN 88.9 mm WALL BOX)
- GF WP — GROUND FAULT TYPE DUPLEX RECEPTACLE, WITH WEATHERPROOF-IN-USE COVER. INSTALL IN SEPARATE SINGLE GANG BOX WHERE SHOWN ON PLANS (MIN 88.9 mm WALL BOX)
- TELEPHONE OUTLET, SEE DROP DETAIL.
- W/P — TELEPHONE OUTLET, WALL OR PAY TYPE AS NOTED
- COMPUTER OUTLET BOX AND CONDUIT DROP.
- WIRING HOME RUN TO PANEL AS NOTED, (2) #12, (1) #12 GND MIN, BACK TO 20 AMP, SINGLE POLE BREAKER UNLESS NOTED OTHERWISE.
- INDICATES (2) POWER CONDUCTORS WITH FULL SIZE GROUND.
- INDICATES (3) POWER CONDUCTORS WITH FULL SIZE GROUND.
- INDICATES (4) POWER CONDUCTORS WITH FULL SIZE GROUND.
- CABLE OR RACEWAY RUN CONCEALED IN WALLS OR CEILINGS SURFACE MOUNTED WHERE NOTED OR ALLOWED IN UTILITY OR UNFINISHED AREAS.
- UNDERSLAB RACEWAY AS NOTED.
- EMERGENCY LIGHTING LOW VOLTAGE (12 VDC) WIRING, RUN CONCEALED IN WALLS OR ABOVE CEILINGS. SURFACE MOUNTED ONLY IN UTILITY AREAS OR WHERE SPECIFICALLY ALLOWED.
- MP 277/480 PP 120/208 — ELECTRICAL PANELBOARD, VOLTAGE AND PHASE AS NOTED REFER TO POWER RISER DIAGRAM AND PANEL SCHEDULES FOR DETAILS
- TC — TIMECLOCK
- PC — PHOTOCELL
- T — TRANSFORMER, 120/24 VAC, 40 VA MIN, OR AS REQUIRED
- MS — MANUAL MOTOR STARTER
- MAGNETIC OR COMBINATION MOTOR STARTER
- TELEPHONE BACKBOARD — TELEPHONE AND CATV BACKBOARD BY EC, SEE SYSTEMS RISER DIAGRAMS FOR ADDITIONAL DETAILS AND SPECIFICATIONS
- FU WP — DISCONNECT SWITCH BY EC, 250 OR 600 V NEMA 1 (OR 3R AS NOTED), FUSIBLE, SIZE AS NOTED OR REQUIRED, DUAL ELEMENT, TIME DELAY FUSES SIZED, FURNISHED AND INSTALLED BY EC PER EQUIPMENT NAMEPLATE VALUES.
- EF — EXHAUST FAN, FURNISHED WITH DUCTWORK AND INSTALLED BY MC. POWER WIRING BY EC AS SHOWN OR AS NOTED, FANS ARE 120 VOLT, FRACTIONAL HORSEPOWER, UNLESS SPECIFICALLY NOTED OTHERWISE.
- HP — EQUIPMENT MOTOR, FURNISHED AND INSTALLED COMPLETE BY OTHERS AS NOTED, POWER WIRING AND DISCONNECT BY EC AS REQUIRED. EC TO PROVIDE MANUAL MOTOR STARTER ON 120 VOLT, FRACTIONAL HP MOTORS, AND INSTALL AND WIRE MAG STARTER ON LARGER MOTORS.
- 3 KVAR CAP — POWER CORRECTION CAPACITOR AT MOTOR LOAD, TYPICAL

ELECTRICAL ABBREVIATIONS

AFF	ABOVE FINISHED FLOOR
AFG	ABOVE FINISHED GRADE
AL	ALUMINUM
BC	BARE COPPER
BKBD	BACKBOARD
BLDG	BUILDING
C	CONDUIT
CATV	CABLE TELEVISION
CSA	CANADIAN STANDARDS
CU	COPPER
CVPS	CENTRAL VERMONT PUBLIC SERVICE
DET	DETAIL
DWG	DRAWING
EC	ELECTRICAL CONTRACTOR
EMT	ELECTRICAL METALLIC TUBING
FU	FUSIBLE
GC	GENERAL CONTRACTOR
GF	GROUND FAULT (PROTECTED)
GFCI	GROUND FAULT CIRCUIT INTERRUPTER
HVAC	HEATING, VENTILATION AND AIR CONDITIONING
MC	MECHANICAL CONTRACTOR
MCB	MAIN CIRCUIT BREAKER
MH	MAGNETIC HOLDERS
MIN	MINIMUM
MLO	MAIN LUG ONLY
MTD	MOUNTED
NET	NEW ENGLAND TELEPHONE
NIC	NOT IN CONTRACT
NF	NON FUSED
PC	PLUMBING CONTRACTOR
PVC	RIGID NON-METALLIC CONDUIT (POLYVINYL CHLORIDE)
SHT	SHEET
TELE	TELEPHONE
TV	TELEVISION
RMC	RIGID GALVANIZED METAL CONDUIT
UL	UNDERWRITERS LABRATORY
UON	UNLESS OTHERWISE NOTED
W/G	WITH GROUND CONDUCTOR
WP	WEATHERPROOF

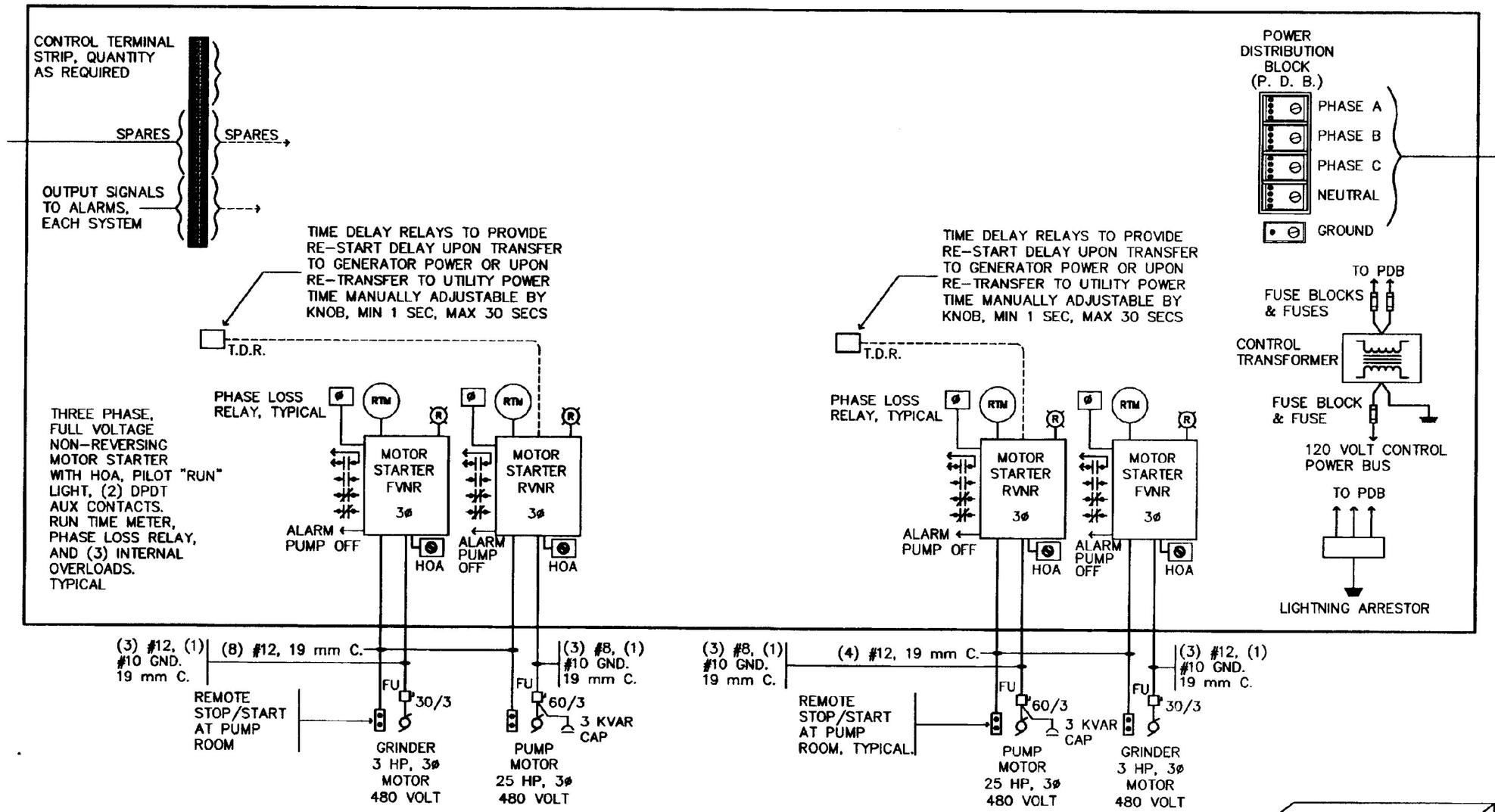

PUMP / GRINDER CONTROL PANEL
NO SCALE

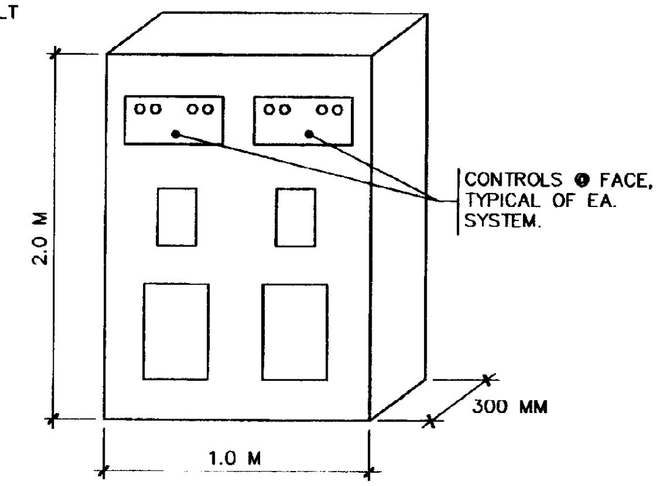

CONTROL PANEL ELEVATION
NO SCALE

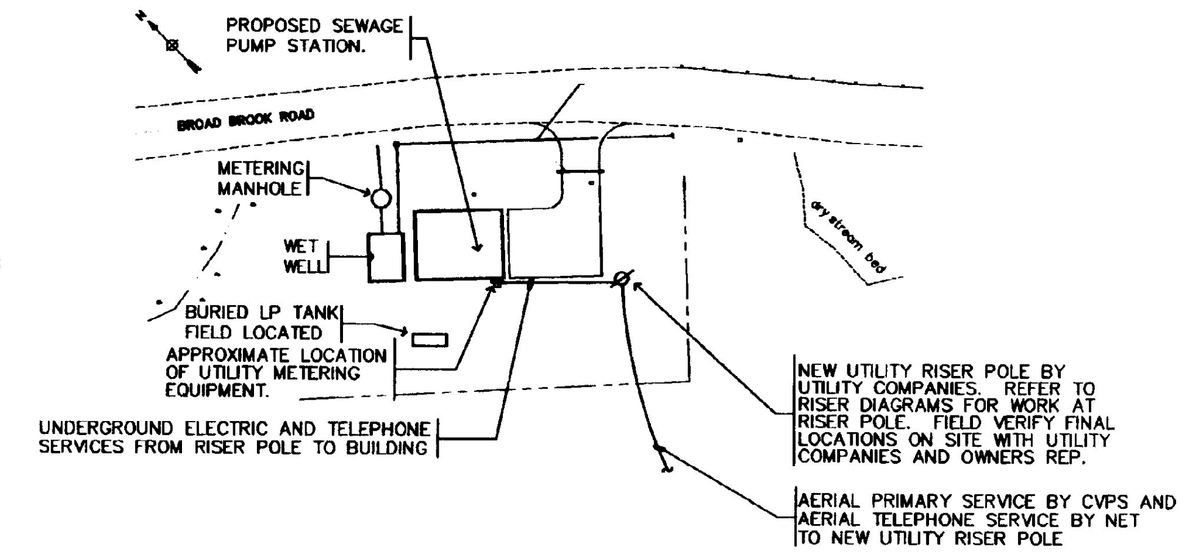

ELECTRICAL SITE PLAN
NO SCALE

LISTED EQUIPMENT NOTICE

ALL EQUIPMENT NEEDING ELECTRICAL POWER IS INTENDED AND SPECIFIED TO BE "UL" OR "CSA" LISTED AND LABELED. ELECTRICAL CONTRACTOR SHALL IMMEDIATELY NOTIFY OWNER AND ENGINEER OF ANY EQUIPMENT NOT SO LISTED AND LABELED AND SHALL NOT PROCEED WITH ANY WIRING OF SUCH EQUIPMENT UNTIL REPLACEMENT OF EQUIPMENT OR DIRECTED IN WRITING BY ENGINEER. TYPICAL OF ALL DEVICES AND EQUIPMENT ON THIS PROJECT.

NO.	DATE	REVISIONS	DRWN	CHKD
4	12/20/96	CONTRACT PLANS	CTS	WRW
1	4/8/96	INTERNAL REVIEW		

TIMOTHY D. SMITH & ASSOCIATES, PC ARCHITECTS
OLD RAILROAD STATION, NORTH BENNINGTON, VERMONT 05257
802-442-8184 FAX 802-442-5241
WRIGHT ENGINEERING, LTD. CIVIL ENGINEERS
128 MERCHANTS ROW - P.O. BOX 176, RUTLAND, VERMONT 05702-0176
802-775-2511 FAX 802-775-8915

STATE OF VERMONT — WAYNE R. WRIGHT — No. 5554 — REGISTERED PROFESSIONAL ENGINEER

PROJECT NO.IM 091-1 (29)
WATER & SEWER EXTENSION PROJECT
TOWN OF GUILFORD
TOWN OF BRATTLEBORO

SHEET TITLE: ELECTRICAL LEGEND, DETAILS, WIRING DIAGRAM AND SITE PLAN

DSGN BY: WRW
DRWN BY: CTS
CHKD BY: WRW
CHKD BY: WRW

STATE OF VERMONT
AGENCY OF TRANSPORTATION
SOUTHEAST VERMONT WELCOME CENTER
GUILFORD, VERMONT

DATE: 01/02/96 SHEET NO. 38 OF 55 SHEETS

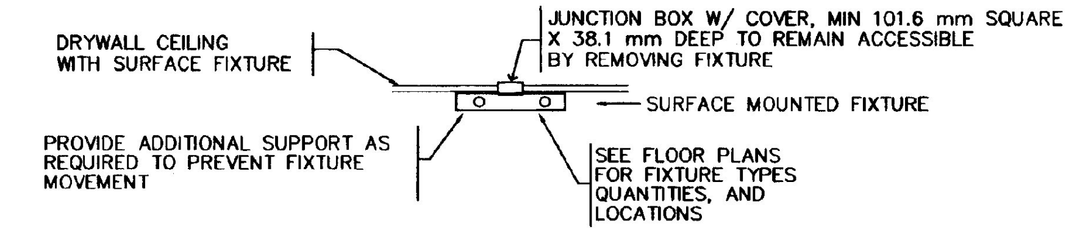

TYPICAL OF EACH SURFACE MOUNTED FIXTURE
PROVIDE SUPPPORTS AT INTERVALS AS PER
MANUFACTURERS INSTRUCTIONS, MINIMUM 120 cm OR
(2) CLIPS PER FIXTURE

SURFACE MOUNTED FIXTURE SUPPORT DETAIL

NOT TO SCALE

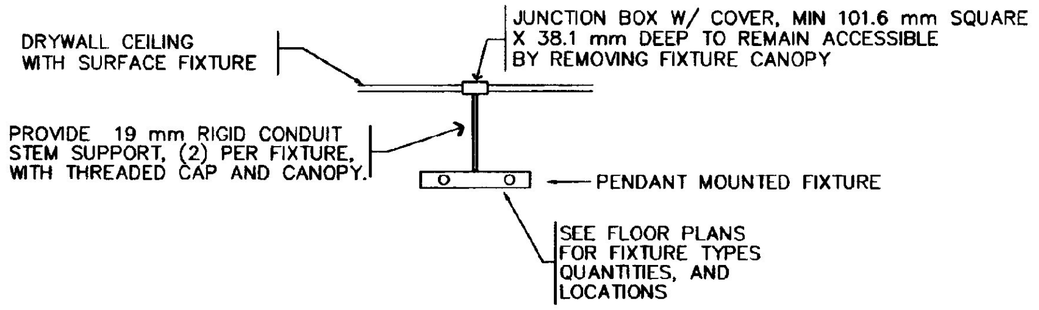

SUSPENDED MOUNTED FIXTURE SUPPORT DETAIL

NOT TO SCALE

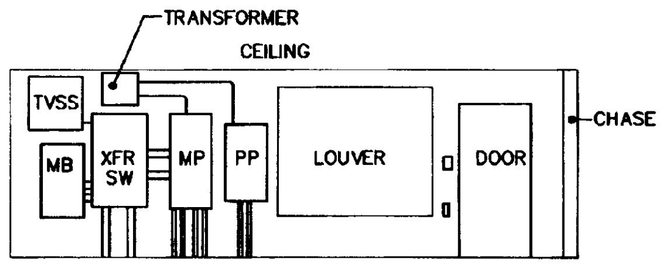

ELEVATION OF ELECTRIC EQUIPMENT WALL – A–A

NOT TO SCALE

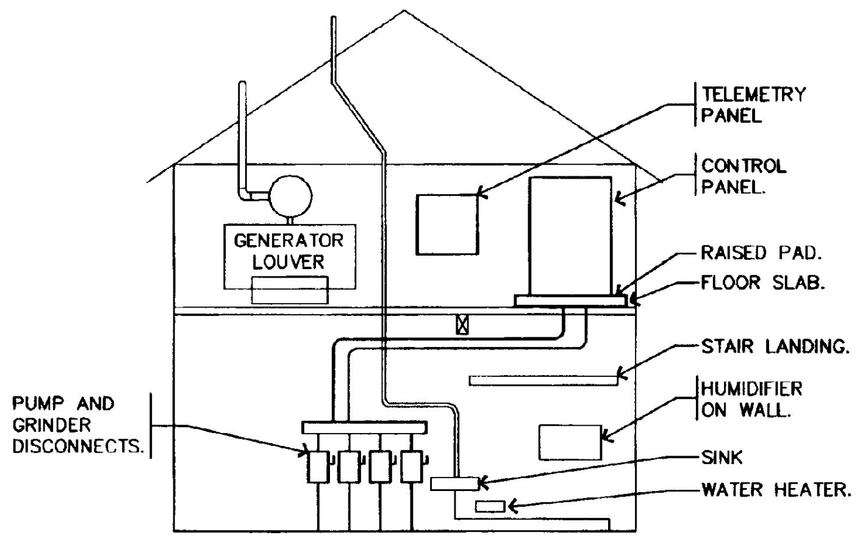

ELEVATION OF CONTROL EQUIPMENT B–B

NOT TO SCALE

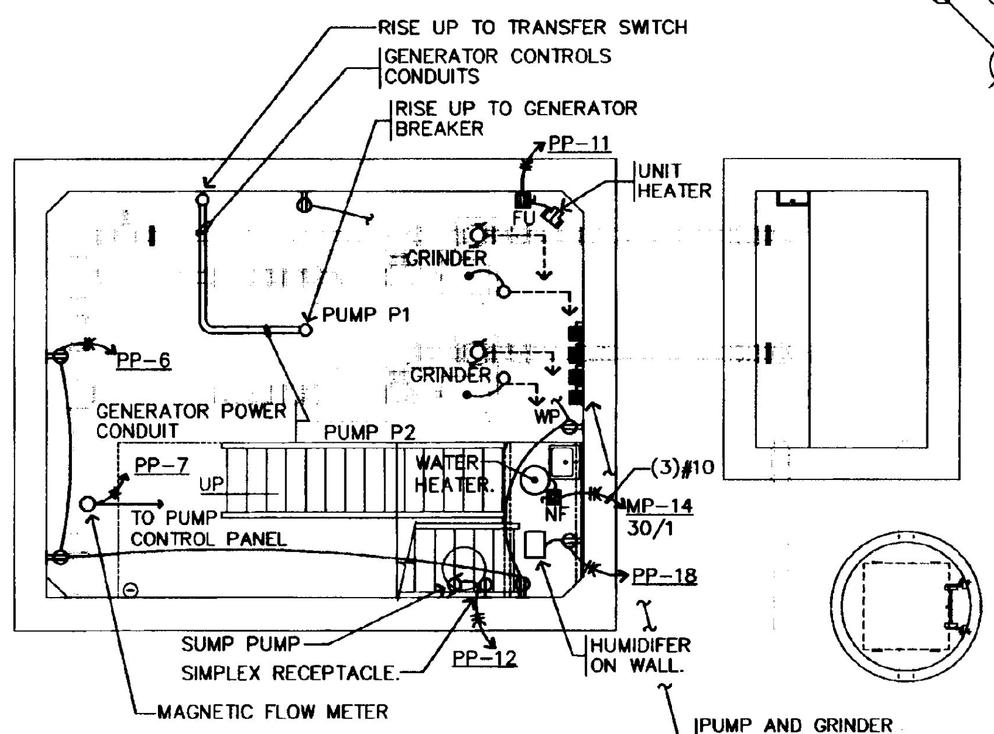

SUB GROUND FLOOR PLAN – POWER

SCALE: 1:60

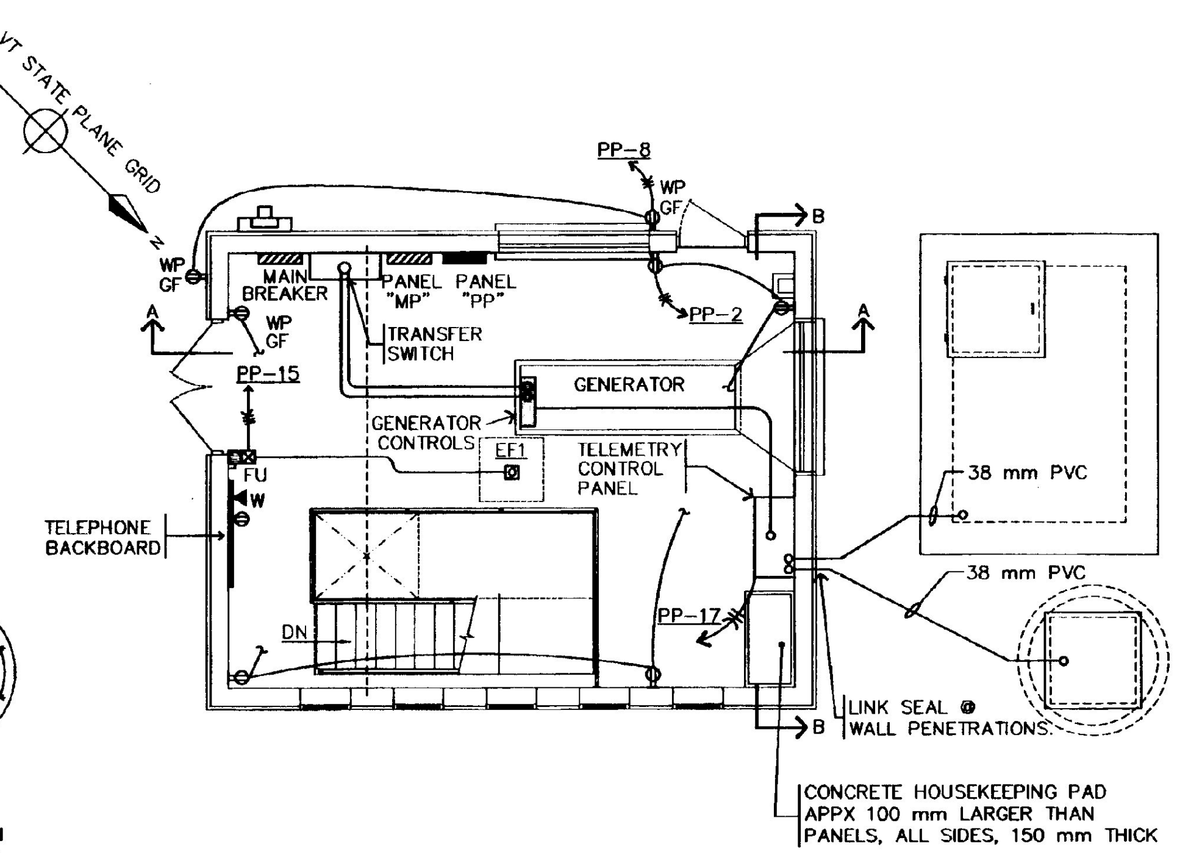

GROUND FLOOR PLAN – POWER

SCALE: 1:60

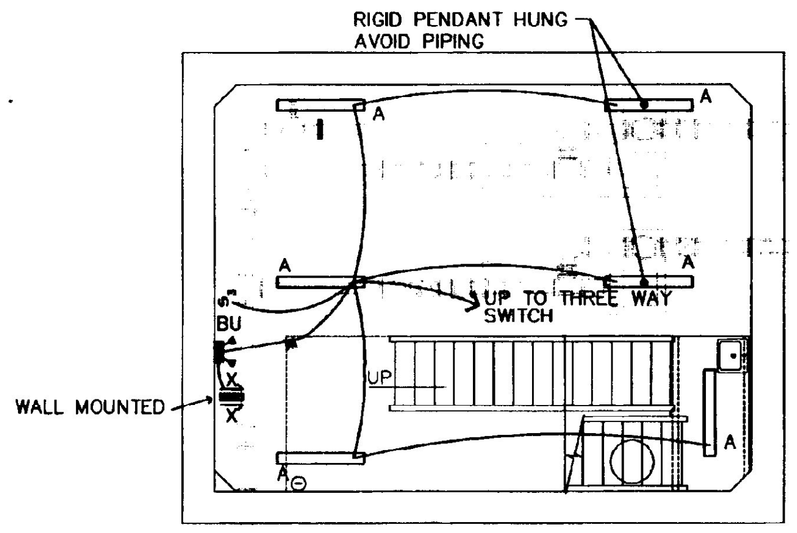

SUB GROUND FLOOR PLAN – LIGHTING

SCALE: 1:60

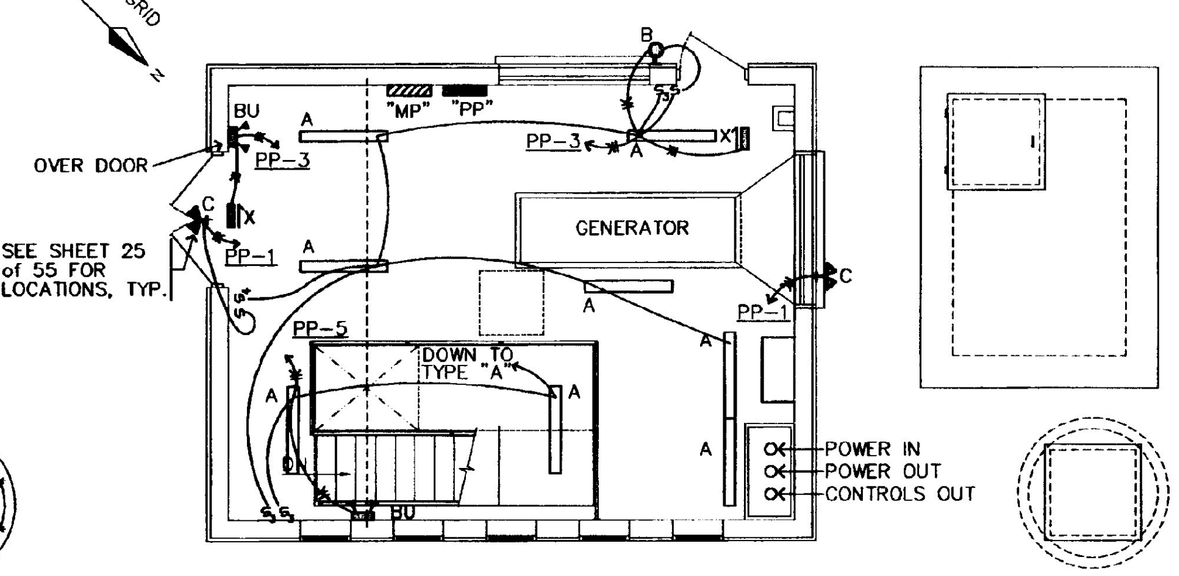

GROUND FLOOR PLAN – LIGHTING

SCALE: 1:60

NOTE:
REFER TO STRUCTURAL PLANS
FOR FLOOR SLAB PENETRATIONS
IN REINFORCED CONCRETE.

NO.	DATE	REVISIONS	DRWN	CHKD
4	12/26/96	CONTRACT PLANS	CTS	WRW
1	4/8/96	INTERNAL REVIEW		

TIMOTHY D. SMITH & ASSOCIATES, PC ARCHITECTS
OLD RAILROAD STATION NORTH BENNINGTON, VERMONT 05257
802-442-8184 FAX 802-442-5241
WRIGHT ENGINEERING, LTD. CIVIL ENGINEERS
128 MERCHANTS ROW – P.O. BOX 176 RUTLAND, VERMONT 05702-0176
802-775-2511 FAX 802-775-8915

PROJECT NO.IM 091–1 (29)
WATER & SEWER EXTENSION PROJECT
TOWN OF GUILFORD
TOWN OF BRATTLEBORO

SHEET TITLE: PUMP STATION ELECTRICAL AND LIGHTING PLANS, SCHEDULES AND DETAILS

DSGN BY: WRW
DRWN BY: CTS
CHKD BY: WRW
CHKD BY: WRW

STATE OF VERMONT
AGENCY OF TRANSPORTATION
SOUTHEAST VERMONT WELCOME CENTER
GUILFORD, VERMONT

DATE: 01/02/96 SHEET NO. 39 OF 55 SHEETS

PANEL: MP	VOLTAGE: 277/480	PHASE: 3	MAIN: 200 A – MLO ☐ MCB ■
TYPE: PANELBOARD ■ LOADCENTER ☐	PLUG IN ☐ BOLT ON ■	FAULT RATING: 10,000	
LOCATION: GROUND FLOOR	MOUNTING: SURFACE		

DIRECTORY	TRIP	₵	AØ	BØ	CØ	₵	TRIP	DIRECTORY
TRANSFORMER	30/3	1	5000 7500			2	50/3	SPARE
--	--	3		5000 7500		4	--	--
--	--	5			5000 7500	6	--	--
PUMP CONTROL PANEL	150/3	7	20000 1000			8	30/3	SPARE
--	--	9		20000 1000		10	--	--
--	--	11			20000 1000	12	--	--
TVSS	40/3	13	100 4100			14	30/1	WATER HEATER
--	--	15		100 500		16	20/1	SPARE
--	--	17			100 500	18	20/1	SPARE
SPARE	20/3	19	1000 1200			20	40/3	SPARE
--	--	21		1000 1200		22	--	--
--	--	23			1000 1200	24	--	--
CONNECTED LOAD			39900	36300	36300	NOTES		
DEMAND 100 %			39900	36300	36300	(BL) BREAKER LOCK KIT		
TOTAL DEMAND LOAD			112500			(GF) GROUND FAULT BREAKER SERVICE EQUIPMENT RATED		

PANEL: PP	VOLTAGE: 120/208	PHASE: 3	MAIN: 50 A – MLO ☐ MCB ■
TYPE: PANELBOARD ■ LOADCENTER ☐	PLUG IN ☐ BOLT ON ■	FAULT RATING: 10,000	
LOCATION: FIRST FLOOR	MOUNTING: SURFACE		

DIRECTORY	TRIP	₵	AØ	BØ	CØ	₵	TRIP	DIRECTORY
EXTERIOR LIGHTING	20/1	1	600 900			2	20/1	GROUND FLOOR RECEPTACLES
GROUND FLOOR LIGHTING	20/1	3		1500 500		4	20/1	SPARE (GF)
SUB-GRADE LIGHTING	20/1	5			750 900	6	20/1	SUB-GRADE RECEPT. (GF)
(BL) FLOW METER	20/1	7	500 360			8	20/1	EXTERIOR RECEPTACLES (GF)
(BL) ALARM PANEL	20/1	9		500 500		10	20/1	HVAC CONTROLS (BL)
UNIT HEATER	20/1	11			500 500	12	20/1	SUMP PUMP 1/3 HP
(BL) CONTROL PANEL POWER	20/1	13	500 500			14	20/1	GENERATOR CONTROLS (BL)
EXHAUST FAN	20/1	15		500 500		16	20/1	SPARE (GF)
TELEMETRY PANEL	20/1	17			500 500	18	30/1	DEHUMIDIFIER
GENERATOR JACKET HTR.	30/2	19	1000 1500			20	20/3	SPARE
--	--	21		1000 1500		22	--	--
SPARE	20/1	23			1000 800	24	--	--
CONNECTED LOAD			5860	6500	5450	NOTES		
DEMAND 100 %			5860	6500	5450	(BL) BREAKER LOCK KIT		
TOTAL DEMAND LOAD			17810			(GF) GROUND FAULT BREAKER		

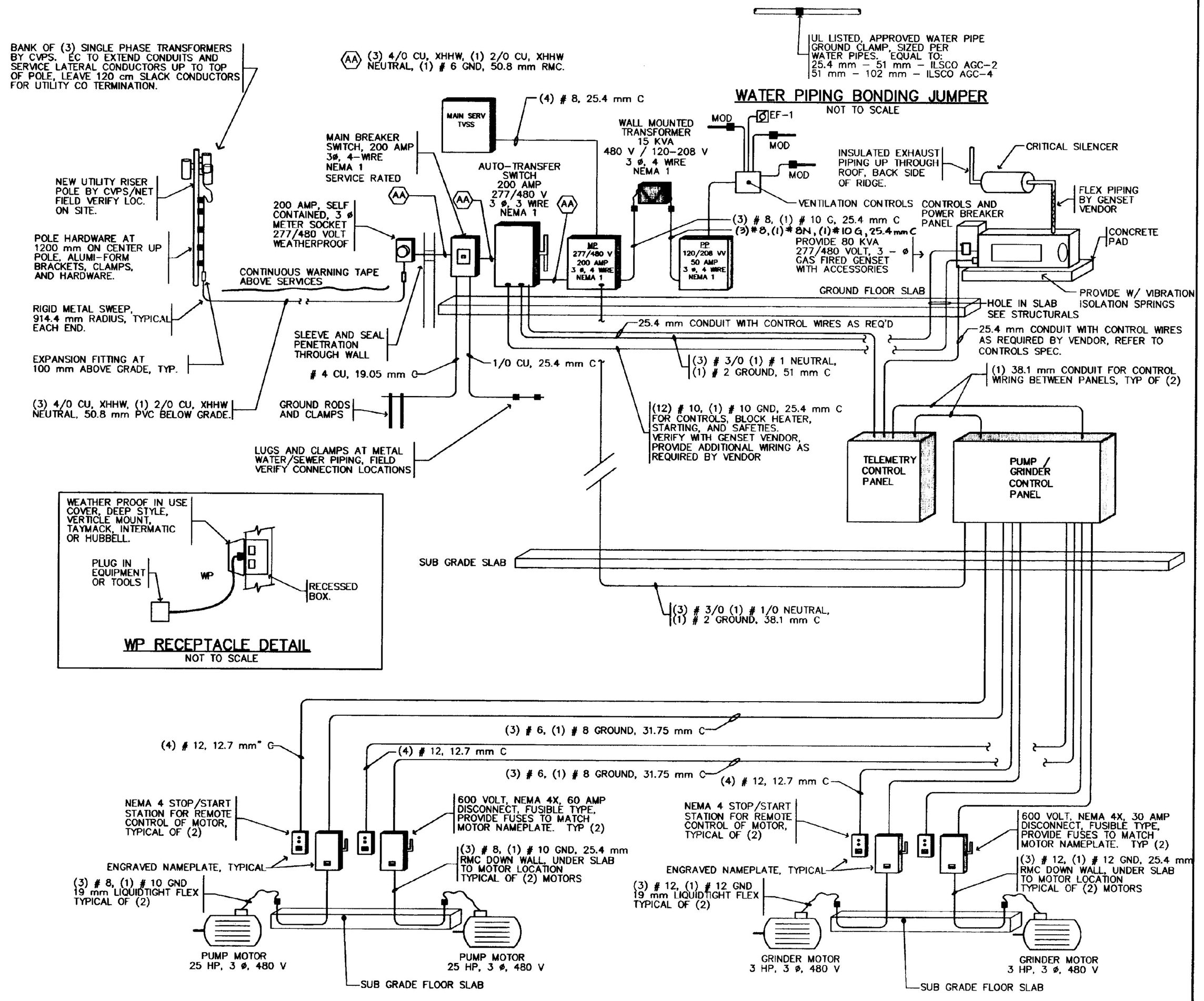

ELECTRICAL RISER DIAGRAM
NOT TO SCALE

NO.	DATE	REVISIONS	DRWN	CHKD
4	12/26/95	CONTRACT PLANS	CTS	WRW
1	4/8/96	INTERNAL REVIEW		

TIMOTHY D. SMITH & ASSOCIATES, PC ARCHITECTS
OLD RAILROAD STATION, NORTH BENNINGTON, VERMONT 05257
802-442-8184, FAX 802-442-5241
WRIGHT ENGINEERING, LTD. CIVIL ENGINEERS
128 MERCHANTS ROW – P.O. BOX 176, RUTLAND, VERMONT 05702-0176
802-775-2511, FAX 802-775-8915

PROJECT NO.IM 091-1 (29)
WATER & SEWER EXTENSION PROJECT
TOWN OF GUILFORD
TOWN OF BRATTLEBORO

SHEET TITLE: ELECTRICAL WIRING DIAGRAM AND PANEL SCHEDULES

DSGN BY:	WRW
DRWN BY:	CTS
CHKD BY:	WRW
CHKD BY:	WRW

STATE OF VERMONT
AGENCY OF TRANSPORTATION
SOUTHEAST VERMONT WELCOME CENTER
GUILFORD, VERMONT

DATE: 01/02/96 SHEET NO. 40 OF 55 SHEETS

HVAC SYMBOL LIST

ALL SYMBOLS ARE NOT NECESSARILY USED

G	GAS
	DOMESTIC COLD WATER (CW)
	DIRECTION OF FLOW
	REDUCER
	CAP OR PLUG
	BOTTOM CONNECTION/TURN AWAY
	TOP CONNECTION/TURN TOWARDS
	UNION (OR FLANGE)
	VALVE (SHUT OFF)
	GLOBE VALVE
	CHECK VALVE
	CONTROL VALVE (2-WAY)
	PRESSURE RELIEF VALVE
	CONTROL VALVE (3-WAY)
	TRIPLE DUTY VALVE
	PRESSURE REDUCING VALVE
	BALANCING COCK
	FLOW BALANCER
	STRAINER
	THERMOMETER
	PRESSURE GAUGE
V	AIR VENT
	THERMOMETER/TEST/CONTROL WELL
R	PIPE PITCH UP/INCLINE RISE
D	PIPE PITCH DOWN/INCLINE DROP
	FINNED TUBE RADIATION ELEMENT
W/W ENCL.	WALL TO WALL FIN TUBE ENCLOSURE
	TRANSITION-SQUARE TO ROUND
	SUPPLY DUCT SECTION
	RETURN OR EXHAUST DUCT SECTION
	ROUND DUCT SECTION
FD	FIRE DAMPER
BD	BACKDRAFT DAMPER
SD	SMOKE DAMPER
VD	VOLUME DAMPER
MD	MANUAL DAMPER
MOD	MOTOR OPERATED DAMPER
CLM	CUBIC LITERS/MINUTE
NTS	NOT TO SCALE
DSD	DUCT SMOKE DETECTOR
MBH	THOUSAND BTU/HOUR
(E)	EXISTING
T	THERMOSTAT
T_E	ELECTRIC THERMOSTAT
T_2	WITH MULTIPLE SET POINTS
T_G	WITH A GUARD
T_S	TEMPERATURE SENSOR
S	STATIC PRESSURE SENSOR
H	HUMIDISTAT
UCD	UNDERCUT DOOR (25 mm BY THE G.C.)
L #	LOUVERED DOOR, INDICATES SQ. FT. FREE AREA
	AIR FLOW
L	ACOUSTIC THERMAL LINING
	SOUND ATTENUATOR
	WORK TO BE REMOVED
	NEW TO EXISTING CONNECTION
TYPE / CFM / SIZE	REGISTER, DIFFUSER, OR GRILLE DESIGNATION

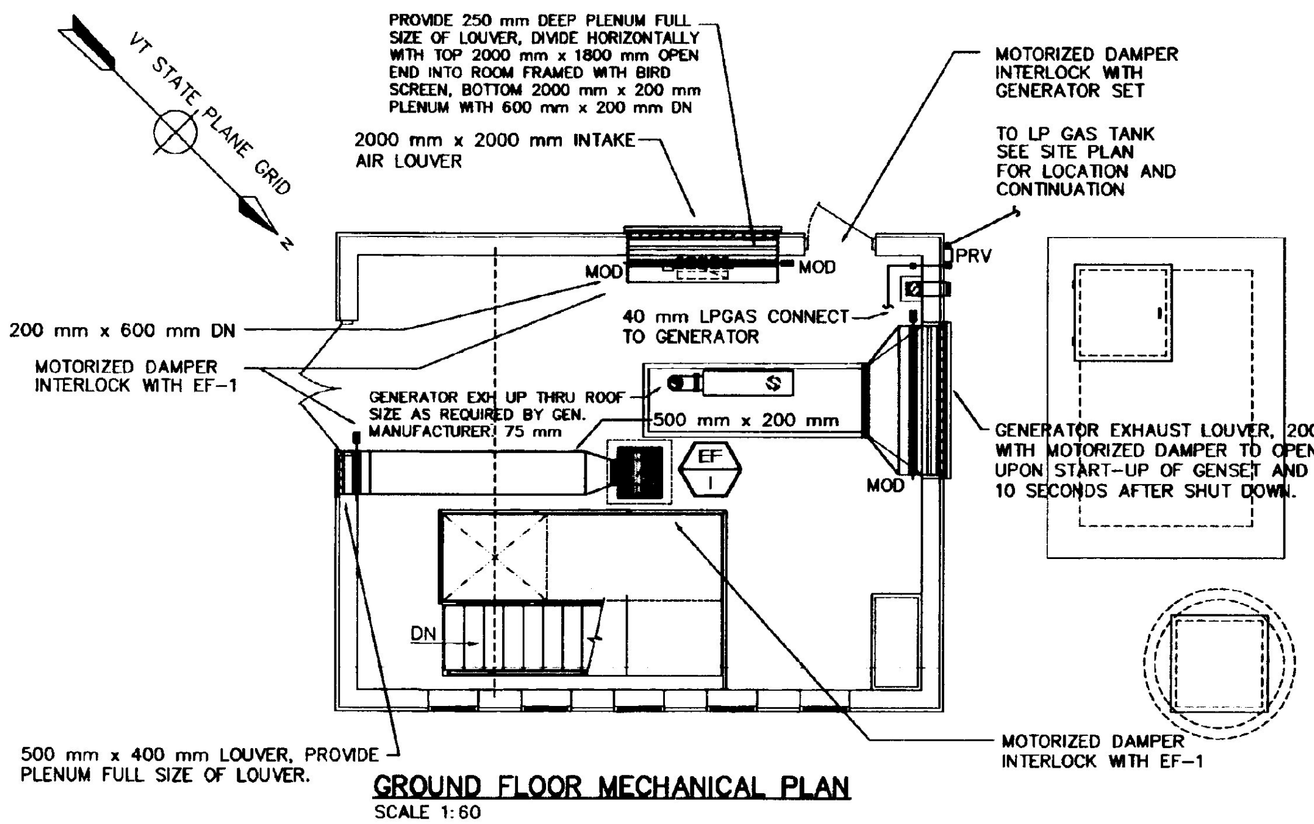

GROUND FLOOR MECHANICAL PLAN

SCALE 1:60

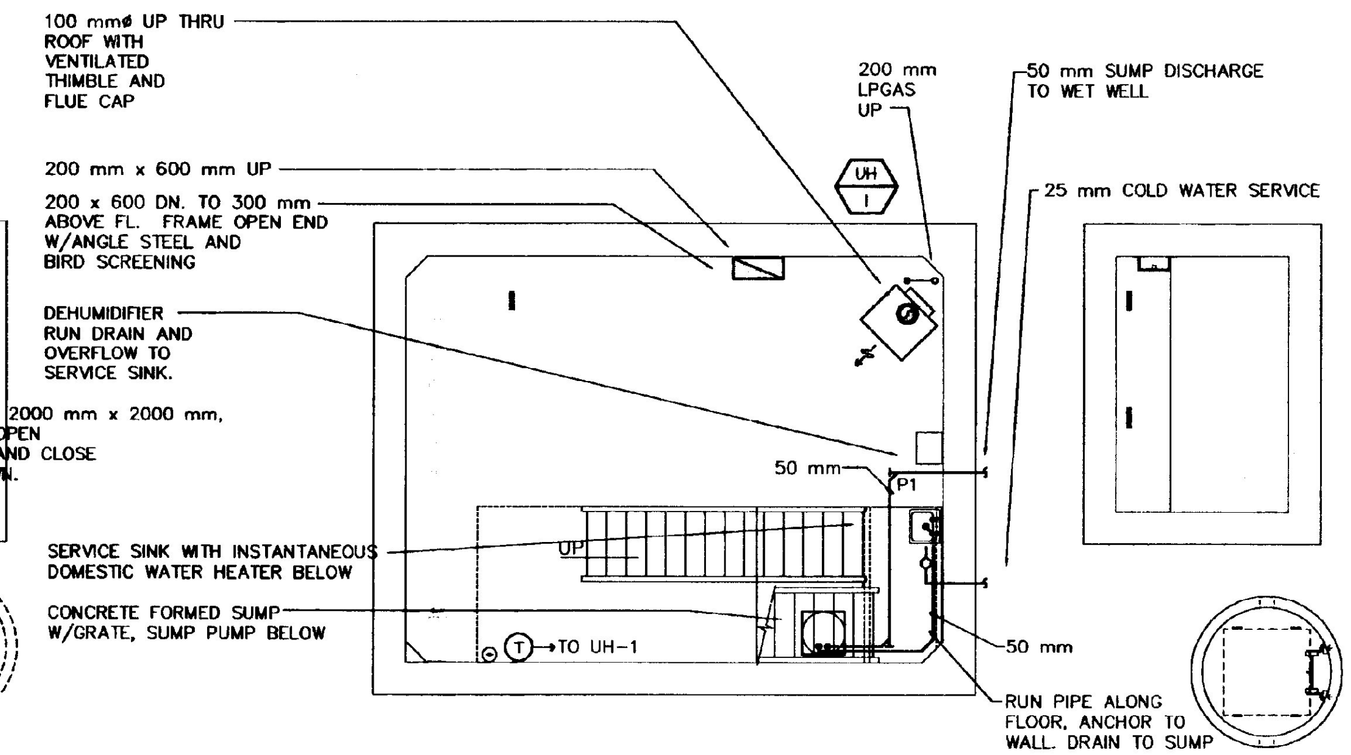

SUB GROUND FLOOR MECHANICAL PLAN

SCALE 1:60

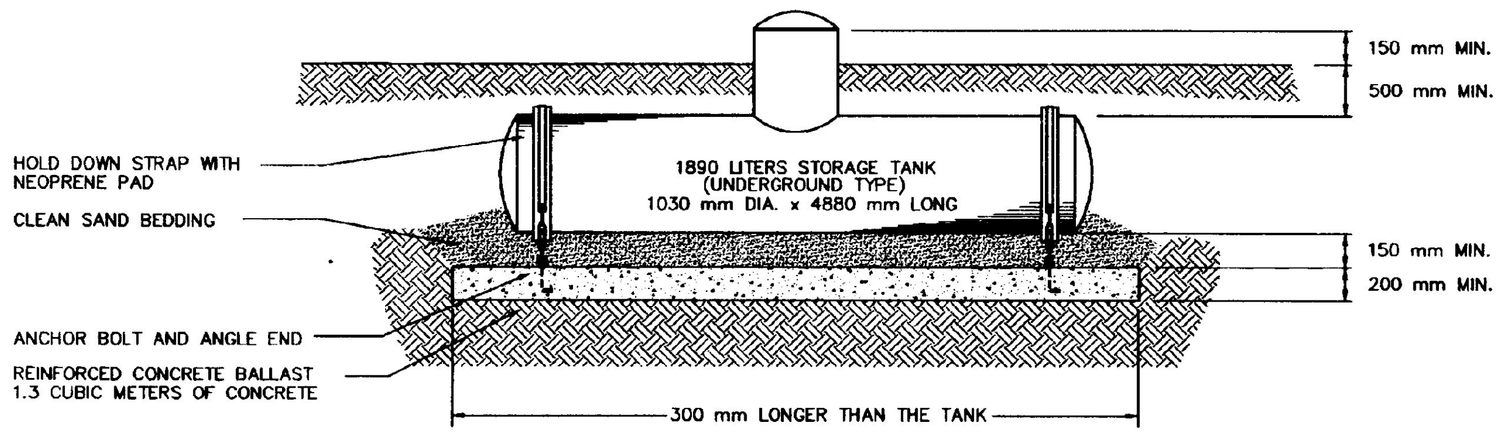

BURIED LP GAS TANK DETAIL

NO SCALE

COORDINATE INSTALLATION OF THE LP GAS TANK AND SERVICE PIPING WITH THE LOCAL GAS SUPPLIER INSTALLATION TO BE IN COMPLIANCE WITH MANUFACTURES GUIDELINES FOR WATER TABLE AT GRADE.

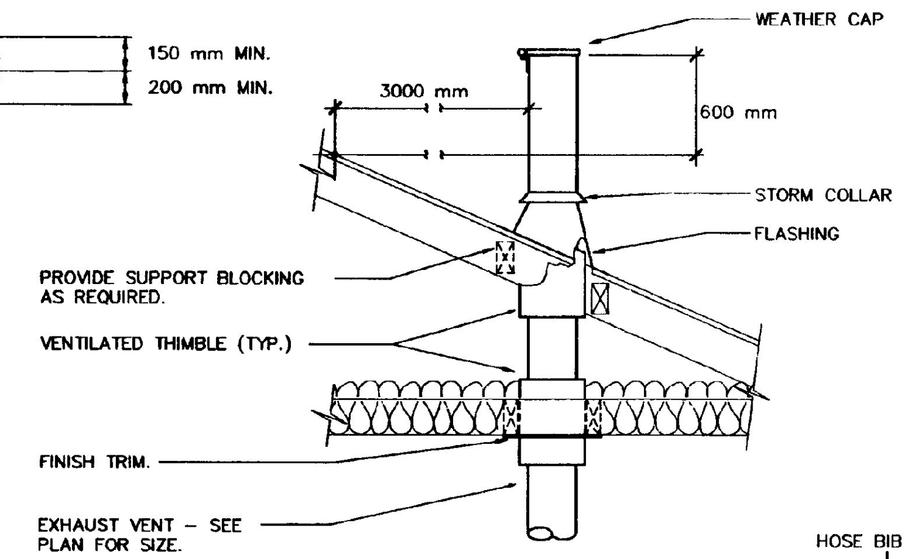

GENERATOR EXHAUST VENT DETAIL

NO SCALE

NOTES:

1. LOCATE WEATHER CAP MIN. 600 mm ABV. ANY PORTION OF ROOF WITHIN 300 cm.
2. PROVIDE ROOF OPENING, FRAMING, AND LOCATION, SETTING AND SECURING OF FLASHING.

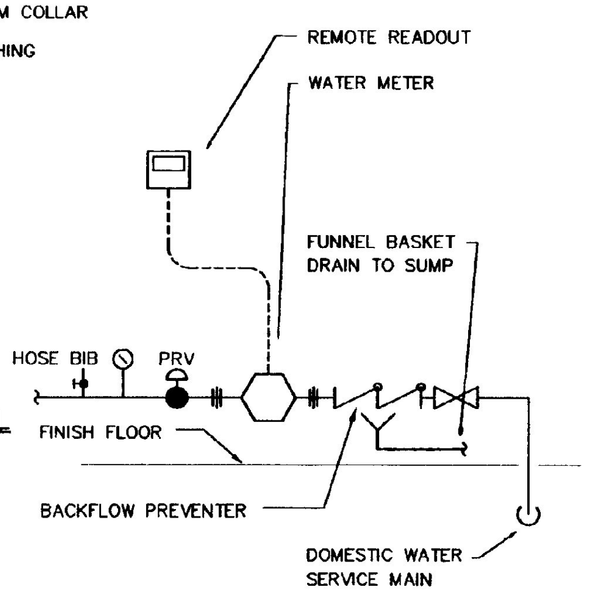

DOM. WATER ENTRANCE DETAIL

NO SCALE

UNIT HEATER SCHEDULE - LPGAS

TYPE	LOCATION	TYPE	LPM	CAPACITY WATT	EFF.	INPUT WATT	INLET PRES	E.A.T. °C	L.A.T. °C	FAN MOTOR RPM	FAN MOTOR WATTS	FAN MOTOR VOLTS	FAN MOTOR PHASE	DESIGN EQUIPMENT
UH-1	AS SHOWN	HORZ.	360	7035	81%	8795	200mm WC	15.5	32.5	1050	25	120	1 ø	STERLING "QVEF-30" POWER VENTED

FAN SCHEDULE

UNIT NO.	LOCATION	SERVICE	TYPE	LPM	S.P.	FAN DIA.	BLADE TYPE	FAN RPM	TIP SPEED	OUTLET VEL.	DRIVE	ROTATION DISCHARGE	MOTOR RPM	MOTOR WATTS	MOTOR VOLTS	MOTOR PHASE	MOTOR STARTER	MOTOR PILOT LIGHT	DESIGN EQUIPMENT
EF-1	AS SHOWN	VENTILATION	CEILING	425	6.35 mm	356mm	PROP	1140	-	-	DIRECT	-	1140	420	120	1 ø	MANUAL	NO	GREENHECK "SP 162" •

• PROVIDE WITH CEILING EXHAUST GRILLE

NO.	DATE	REVISIONS	DRWN	CHKD
4	12/26/96	CONTRACT PLANS	MAM	WRW
1	4/8/96	INTERNAL REVIEW		

TIMOTHY D. SMITH & ASSOCIATES, PC ARCHITECTS
OLD RAILROAD STATION, NORTH BENNINGTON, VERMONT 05257
802-442-8184 FAX 802-442-5241
WRIGHT ENGINEERING, LTD. CIVIL ENGINEERS
128 MERCHANTS ROW - P.O. BOX 176, RUTLAND, VERMONT 05702-0176
802-775-2511 FAX 802-775-8915

PROJECT NO.IM 091-1 (29)

WATER & SEWER EXTENSION PROJECT

TOWN OF GUILFORD
TOWN OF BRATTLEBORO

SHEET TITLE: PUMP STATION HEATING, VENTILATION AND PLUMBING

DSGN BY: MDV
DRWN BY: MAM
CHKD BY: MDV
CHKD BY: WRW

STATE OF VERMONT
AGENCY OF TRANSPORTATION
SOUTHEAST VERMONT WELCOME CENTER
GUILFORD, VERMONT

DATE: 01/02/96 SHEET NO. 41 OF 55 SHEETS

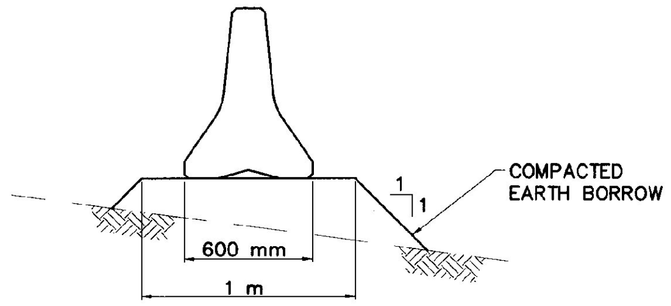

BARRIER STABILIZATION DETAIL

NOT TO SCALE

300 mm x 900 mm OBJECT MARKER TO BE INSTALLED AT END OF BARRIER TAPER. STRIPES SLOPE DOWNWARD TOWARD THE SIDE OF THE BARRIER ON WHICH TRAFFIC IS TO PASS. MOUNTING IS DETERMINED BY CONTRACTOR.

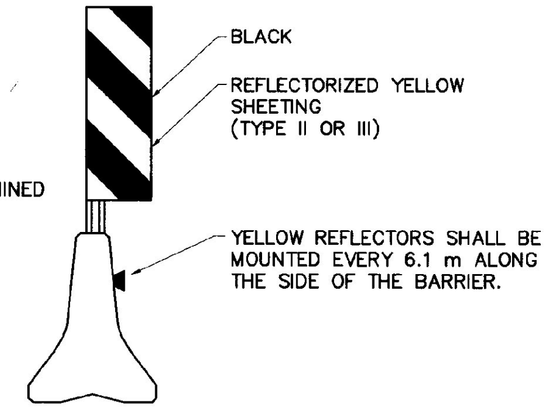

BARRIER MARKER DETAIL

NOT TO SCALE

NOTE:
BARRIER CONFIGURATION, FLASHING ARROW BOARD AND SIGNAGE FOR I-91 SOUTHBOUND IDENTICAL TO THAT SHOWN FOR I-91 NORTHBOUND

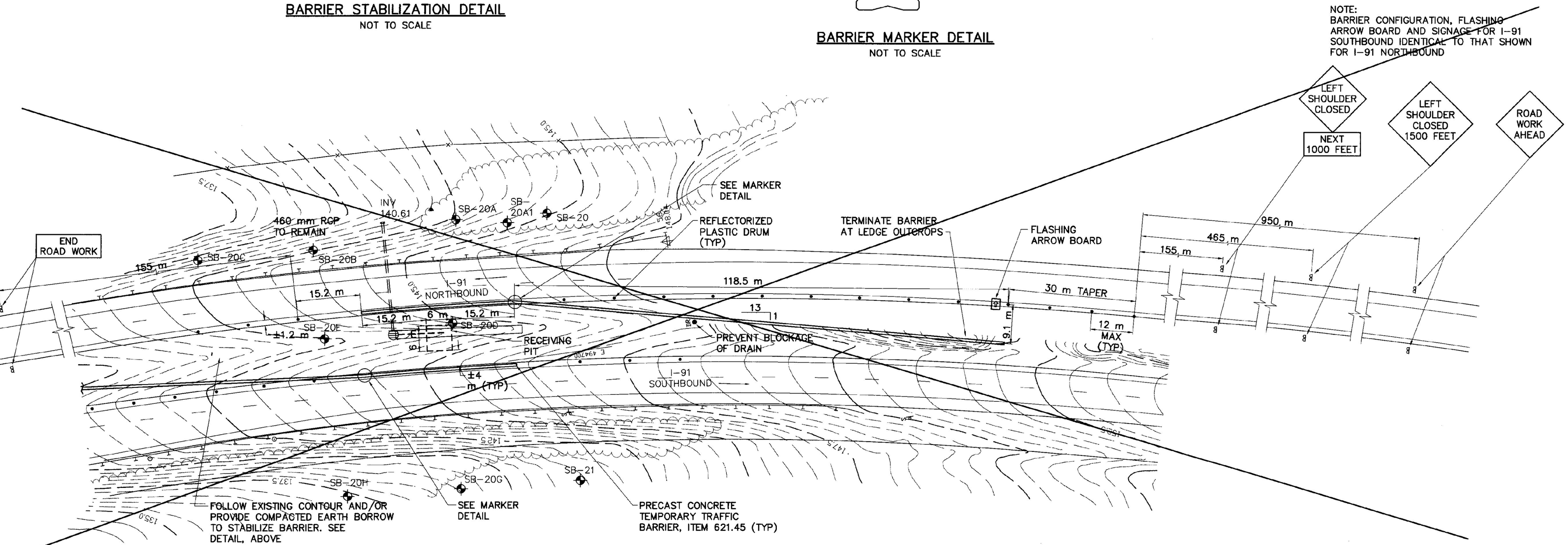

TRAFFIC CONTROL PLAN

SCALE: 1:500

NOTE:
ALL WORK THIS SHEET PAYABLE UNDER ITEM 641.10 – TRAFFIC CONTROL, UNLESS OTHERWISE NOTED.

RECORD DRAWING

SHOWN PICTORALLY
MAY NOT BE TO SCALE

THESE AS-BUILT OR RECORD DRAWINGS HAVE BEEN PREPARED, IN PART, ON THE BASIS OF INFORMATION COMPILED AND FURNISHED BY OTHERS. THE ENGINEER WILL NOT BE RESPONSIBLE FOR ANY ERRORS OR OMISSIONS WHICH HAVE BEEN INCORPORATED INTO THIS DOCUMENT AS A RESULT OF INFORMATION BY OTHERS.

VAOT Metric

NO.	DATE	REVISIONS	DRWN	CHKD
5	9/30/98	NO AS-BUILT INFORMATION ADDED	DSM	KAS
4	12/26/96	CONTRACT PLANS	DSM	MPY
3	11/11/96	NEW SHEET	DSM	MPY

TIMOTHY D. SMITH & ASSOCIATES, PC ARCHITECTS
OLD RAILROAD STATION NORTH BENNINGTON, VERMONT 05257
802-442-8184 FAX 802-442-5241
WRIGHT ENGINEERING, LTD. CIVIL ENGINEERS
128 MERCHANTS ROW – P.O. BOX 176 RUTLAND, VERMONT 05702-0176
802-775-2511 FAX 802-775-8915

STATE OF VERMONT KEVIN R.D. SMITH No. 5864 REGISTERED PROFESSIONAL ENGINEER

PROJECT NO.IM 091-1 (29)
WATER & SEWER EXTENSION PROJECT
TOWN OF GUILFORD
TOWN OF BRATTLEBORO

SHEET TITLE: TRAFFIC CONTROL PLAN

DSGN BY: KAS
DRWN BY: DSM
CHKD BY: KAS
CHKD BY: MPY

STATE OF VERMONT
AGENCY OF TRANSPORTATION
SOUTHEAST VERMONT WELCOME CENTER
GUILFORD, VERMONT

DATE: 11/11/96 SHEET NO. 42 OF 55 SHEETS

C:\ACAD12\950\950142AB Fri Oct 9 14:32:25 1998

STATE OF VERMONT
AGENCY OF TRANSPORTATION
RIGHT OF WAY PLANS
DETAIL SHEET

TABLE OF PROJECT PROPERTY ACQUISITION

PARCEL NO.	GRANTOR	SHEET NO.	BEGINNING STATION	ENDING STATION	TAKING	REM.	RIGHTS	TITLE TAKEN	DATE	TOWN OR CITY RECORDED	BK.	PG.	REMARKS
101	BRATTLEBORO DEVELOPMENT CREDIT CORPORATION	4	-0+003.00 LT.	0+285.81 LT.	0.229HA±		EASEMENT (P)			BRATTLEBORO			SEWER(VARIABLE WIDTH) (0.57A±)
			-0+008.90 CL. 0+072.00 RT. 0+090.00 CL.±	0+290.54 LT.			CONST. (T) 0.20HA±(0.50A±) REMOVE (T)						SHED BURIED FUEL OIL TANK (REMOVED BY OTHERS)
			0+146.00 RT.± 0+175.00 LT.±	0+157.50 RT.±			REMOVE (T) REMOVE & RESET (T)						CONCRETE PAD BOLLARDS
102A	BRATTLEBORO TOWN SCHOOL DISTRICT	4,5,6	0+294.21 RT.	0+721.23 RT.	0.547HA±		EASEMENT (P)			BRATTLEBORO			SEWER(VARIABLE WIDTH) (1.35A±)
			0+289.65 RT. 0+300.00 RT. 0+359.29 LT. 0+413.00 RT.± 0+626.00 LT.±	0+412.65 RT. 0+393.06 RT. 0+417.00 LT. 0+433.00 RT.± 0+684.00 RT.±			CONST. (T)0.063HA±(0.16A±) SLOPE (T)0.066HA±(0.16A±) SLOPE (T)0.090HA±(0.21A±) REMOVE & RESET (T) REMOVE & RESET (T)						CHAIN-LINK FENCE CHAIN-LINK FENCE & PORTABLE BLEACHERS
			0+697.64 LT. 0+700.46 RT. 0+719.30 RT.	0+718.13 LT. 0+721.23 RT.			SLOPE (T)186SM± (2000SF±) SLOPE (T)0.060HA±(0.15A±) CULVERT (P)						INSTALL & MAINTAIN
102B		6	0+740.00 LT. 0+752.00 LT.	0+752.00 LT. 0+768.30 LT.			CHANNEL (P)129SM± (1400SF±) SLOPE (T)101SM± (1090SF±)			BRATTLEBORO			
103A	VERMONT AGRICULTURAL BUSINESS EDUCATION CENTER, INC.	6	0+737.00 RT. OFF BASELINE	0+751.28 RT. 0+745.80 RT.			CHANNEL (P)133SM± (1430SF±) SLOPE (T)140SM± (1510SF±)			BRATTLEBORO			
103B		8,9 10	1+143.40 RT. 1+121.70 RT. 1+421.00 RT.	1+577.60 RT. 1+409.00 RT. 1+577.60 RT.	0.23HA±		EASEMENT (P) CONST. (T)0.170HA±(0.42A±) CONST. (T)0.110HA±(0.26A±)			BRATTLEBORO			WATER/SEWER (0.57A±)
104	DOWNING, JERRY M. & SABRINA A.	6,7	0+749.70 RT. 0+750.10 RT.	0+762.40 RT. 0+762.30 RT.			SLOPE (T) 25SM± (270SF±) CONST. (T) 51SM± (550SF±)	T.U.A.		BRATTLEBORO			
105	HOFMANN, MICHAEL M., JR. HOFMANN, DENNIS H.	15	3+062.80 LT.	3+106.90 LT.			CONST. (T) 200SM±(2150SF±)			GUILFORD			

REVISION NO.	SHEET	DESCRIPTION OF REVISION	DATE	MADE BY	APPROVED BY
1	3,4,5 6,8,9 10,15	ALL PARCELS. CHANGE ALL PARCEL NUMBERS TO THE 100 SERIES FOR ACCOUNTING PURPOSES. PER C.O. 8795.	04-05-96	M.J.R.	L.W.B.
		REPRODUCIBLES TO CMU	06-18-96		

0911028 200 1805 91A239 H.P.

ACCT.root
/prop/91a239/ra239cd.dgn
DATE PLOTTED 18-JUN-1996
ra239cdl.i

DR.(P)- DRAINAGE RIGHT
DIT.(P)- DITCHING RIGHT
CH.(P)- CHANNEL RT.
DRIVE (T)- DRIVE RIGHT
CUL.(P)- CULVERT RIGHT
[W]- WATER SOURCES

PRESENT R.O.W.
TAKING WITHOUT ACCESS
TAKING WITHOUT ACCESS ALONG PROPERTY LINE
TAKING WITH ACCESS
(P) PERMANENT EASEMENT
(T) TEMPORARY EASEMENT

LEGEND
CZ (P) CLEAR ZONE
CONST.(T) CONSTRUCTION EASEMENT
SR SR SLOPE RIGHTS
PROPERTY LINE
TOP OF CUT
TOE OF SLOPE

REVISED 4-5-96

APPROVED: LAWRENCE BLISS; L.S. DATE: 01-30-96
AGENT D. PLANS & TITLES

R.O.W. PLANS

GUILFORD
IM 091-1(29)
R.O.W. SHEET 3 OF 15 SHEETS
SHEET 42-43 OF 54-55

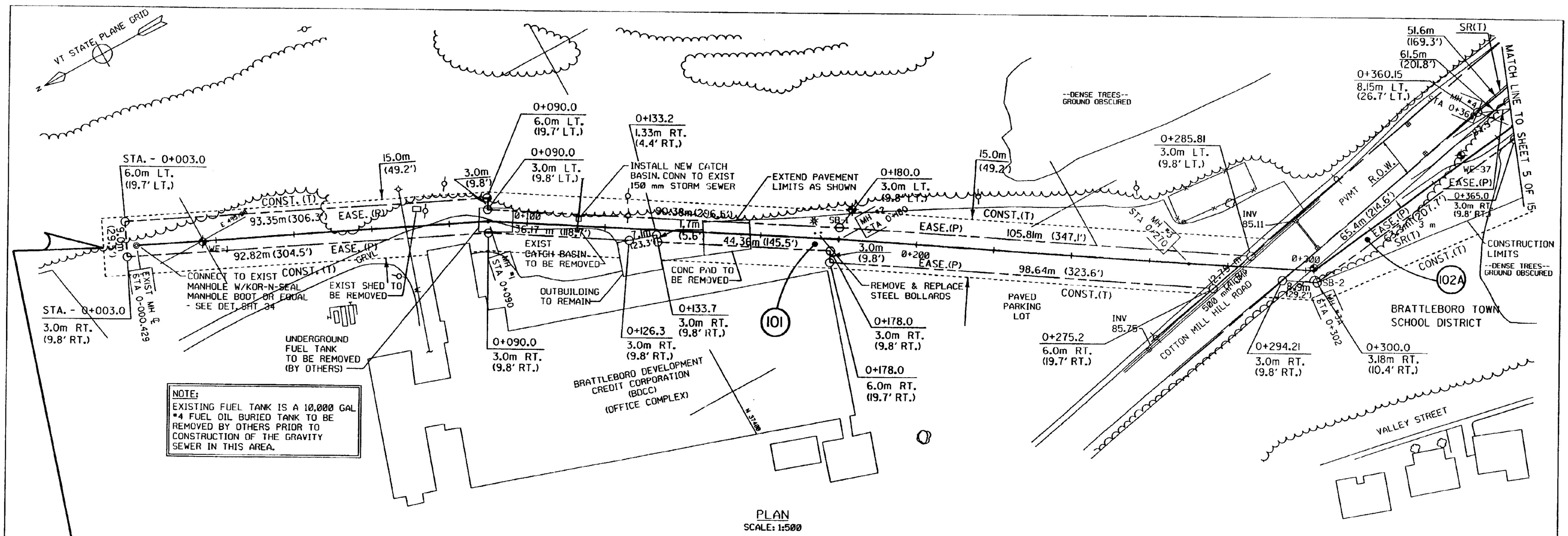

PLAN
SCALE: 1:500

BEGIN R.O.W. PROJECT

IM 091-1(29) STA. -0+008.9 ℄

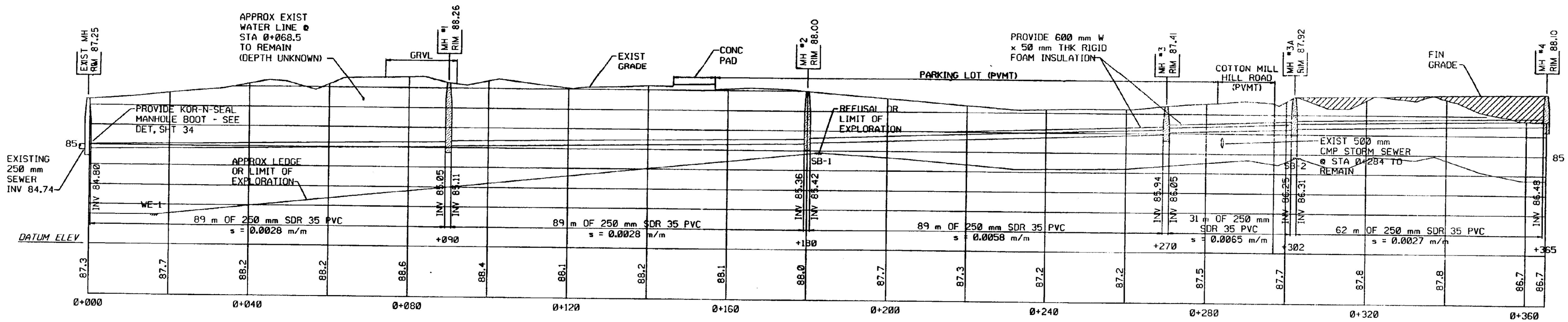

PROFILE
SCALE: 1:500 H
1:100 V

FOR R.O.W. USE ONLY

09I1028 200 H.P.
/prop/91a239/ra239105.1

NO.	DATE	REVISIONS	DRWN	CHKD

TIMOTHY D. SMITH & ASSOCIATES, PC
OLD RAILROAD STATION
802-463-9164
WRIGHT ENGINEERING, LTD.
136 MERCHANTS ROW - P.O. BOX 176
802-775-2611

ARCHITECTS
NORTH BENNINGTON, VERMONT 05257
FAX 802-442-5241
CIVIL ENGINEERS
RUTLAND, VERMONT 05702-0276
FAX 802-775-0915

PROJECT NO.IM 091-1 (29)
WATER & SEWER EXTENSION PROJECT
TOWN OF GUILFORD
TOWN OF BRATTLEBORO
SHEET TITLE: SANITARY SEWER PLAN AND PROFILE

DSGN BY:	JAC
DRWN BY:	DSM
CHKD BY:	JAC
CHKD BY:	MPY
DATE:	6-07-95

STATE OF VERMONT
AGENCY OF TRANSPORTATION
SOUTHEAST VERMONT WELCOME CENTER
GUILFORD, VERMONT

R.O.W. SHEET 4 OF 15 SHEETS
SHEET ~~43~~ 44 OF ~~54~~ 55

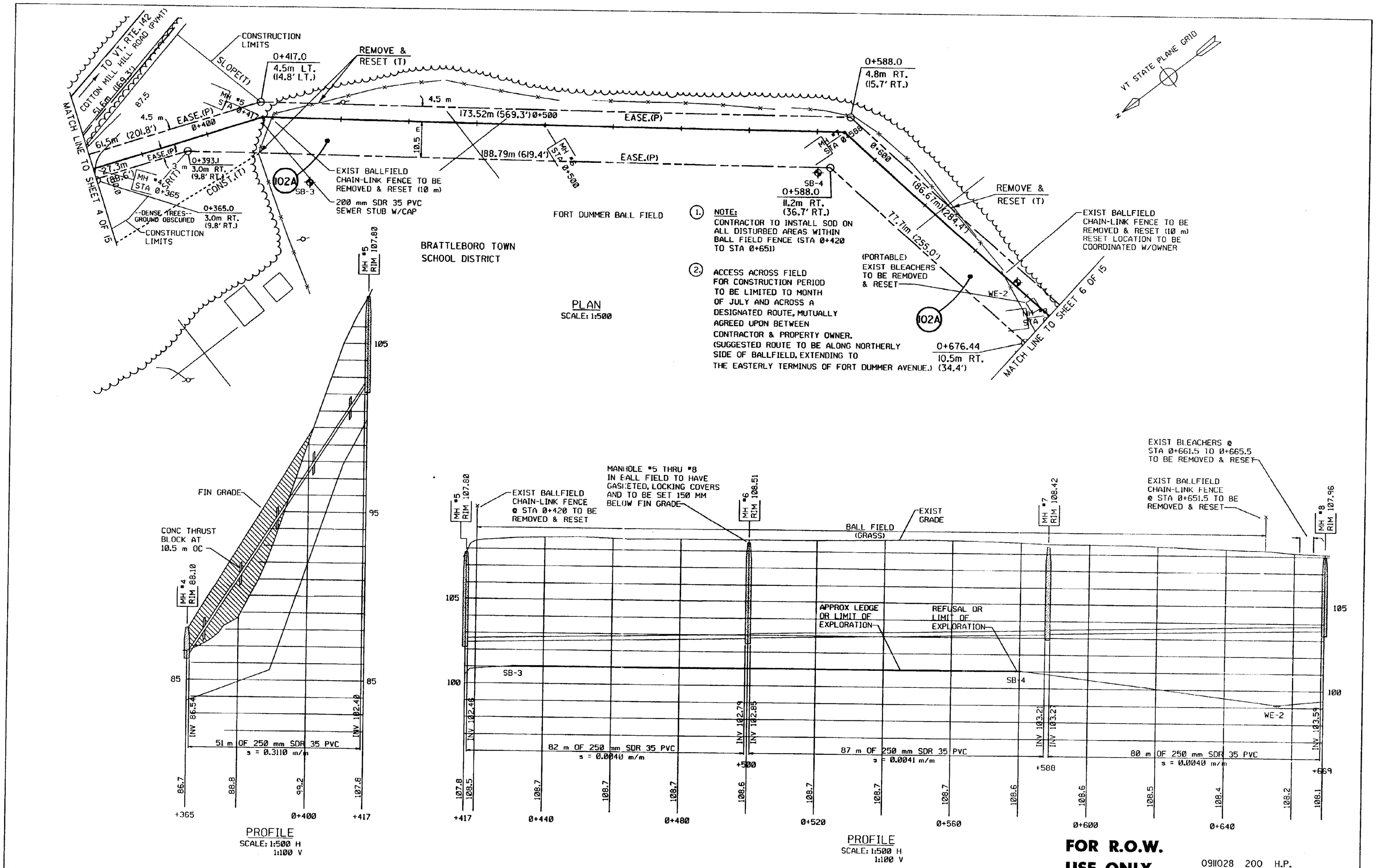

FOR R.O.W. USE ONLY

0911028 200 H.P.
/prop/91a239/ra239106.1

NO.	DATE	REVISIONS	DRWN	CHKD

TIMOTHY D. SMITH & ASSOCIATES, PC
OLD RAILROAD STATION
802-442-8184

WRIGHT ENGINEERING, LTD.
136 MERCHANTS ROW - P.O. BOX 176
802-775-2611

ARCHITECTS
NORTH BENNINGTON, VERMONT 05257
FAX 802-442-5241

CIVIL ENGINEERS
RUTLAND, VERMONT 05702-0176
FAX 802-775-0915

PROJECT NO.IM 091-1 (39)
WATER & SEWER EXTENSION PROJECT
TOWN OF GUILFORD
TOWN OF BRATTLEBORO

SHEET TITLE: SANITARY SEWER PLAN AND PROFILE

DSGN BY:	JAC
DRWN BY:	DSM
CHKD BY:	JAC
CHKD BY:	MPY

STATE OF VERMONT
AGENCY OF TRANSPORTATION
SOUTHEAST VERMONT WELCOME CENTER
GUILFORD, VERMONT

DATE: 6-07-95

R.O.W. SHEET 5 OF 15 SHEETS
SHEET 44 OF 54
45 55

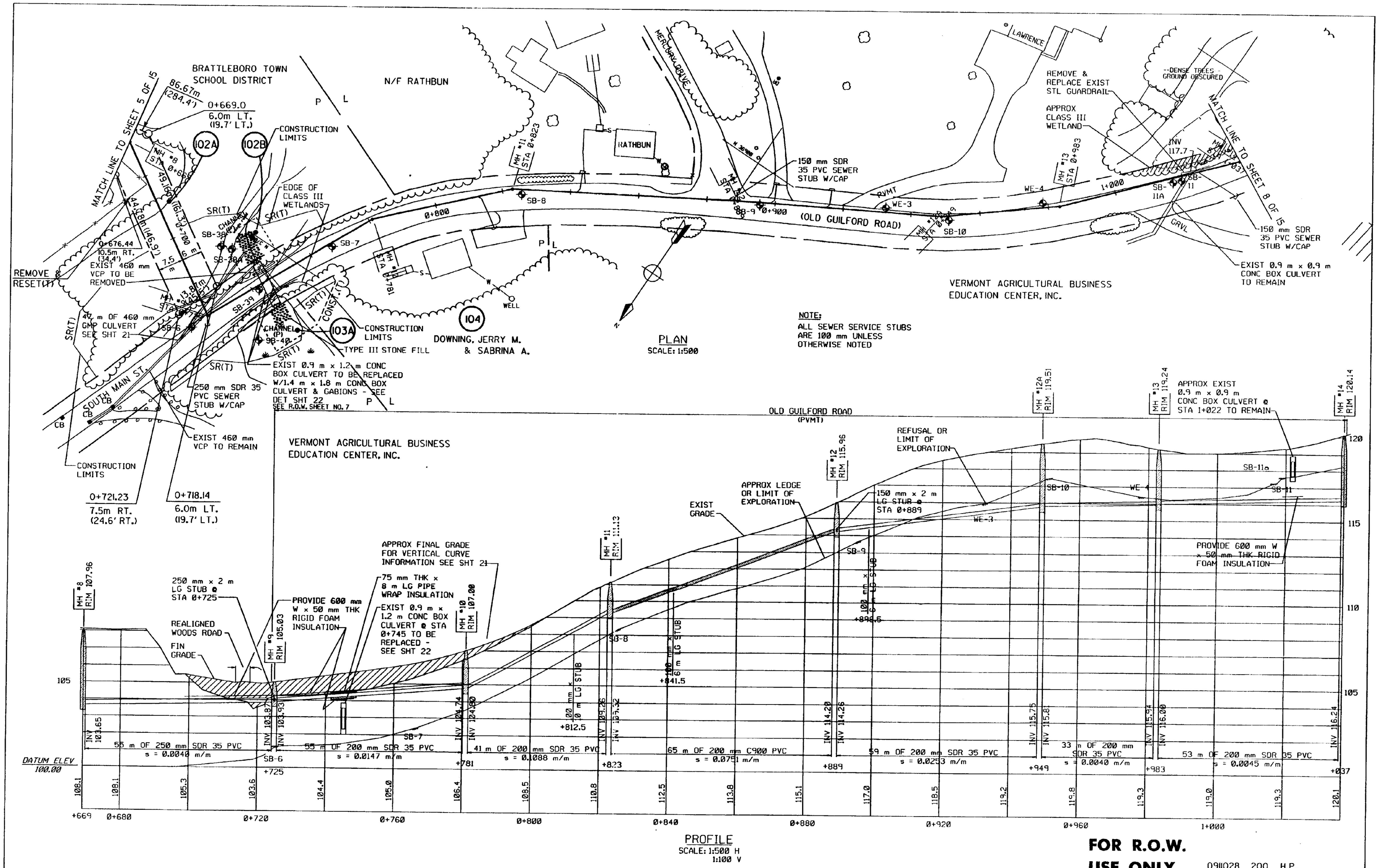

FOR R.O.W. USE ONLY

0911028 200 H.P.
/prop/91a239/ra239107.i

NO.	DATE	REVISIONS	DRWN	CHKD

TIMOTHY D. SMITH & ASSOCIATES, PC
OLD RAILROAD STATION
802-442-8184
WRIGHT ENGINEERING, LTD.
130 MERCHANTS ROW - P.O. BOX 174
802-775-2411

ARCHITECTS
NORTH BENNINGTON, VERMONT 05257
FAX 802-442-6348
CIVIL ENGINEERS
RUTLAND, VERMONT 05702-0174
FAX 802-775-0915

PROJECT NO.IM 091-1 (29)
WATER & SEWER EXTENSION PROJECT
TOWN OF GUILFORD
TOWN OF BRATTLEBORO
SHEET TITLE: SANITARY SEWER PLAN AND PROFILE

DSGN BY:	JAC
DRWN BY:	DSM
CHKD BY:	JAC
CHKD BY:	MPY
DATE:	6-07-95

STATE OF VERMONT
AGENCY OF TRANSPORTATION
SOUTHEAST VERMONT WELCOME CENTER
GUILFORD, VERMONT
R.O.W. SHEET 6 OF 15 SHEETS
SHEET ~~45~~ 46 OF ~~54~~ 55

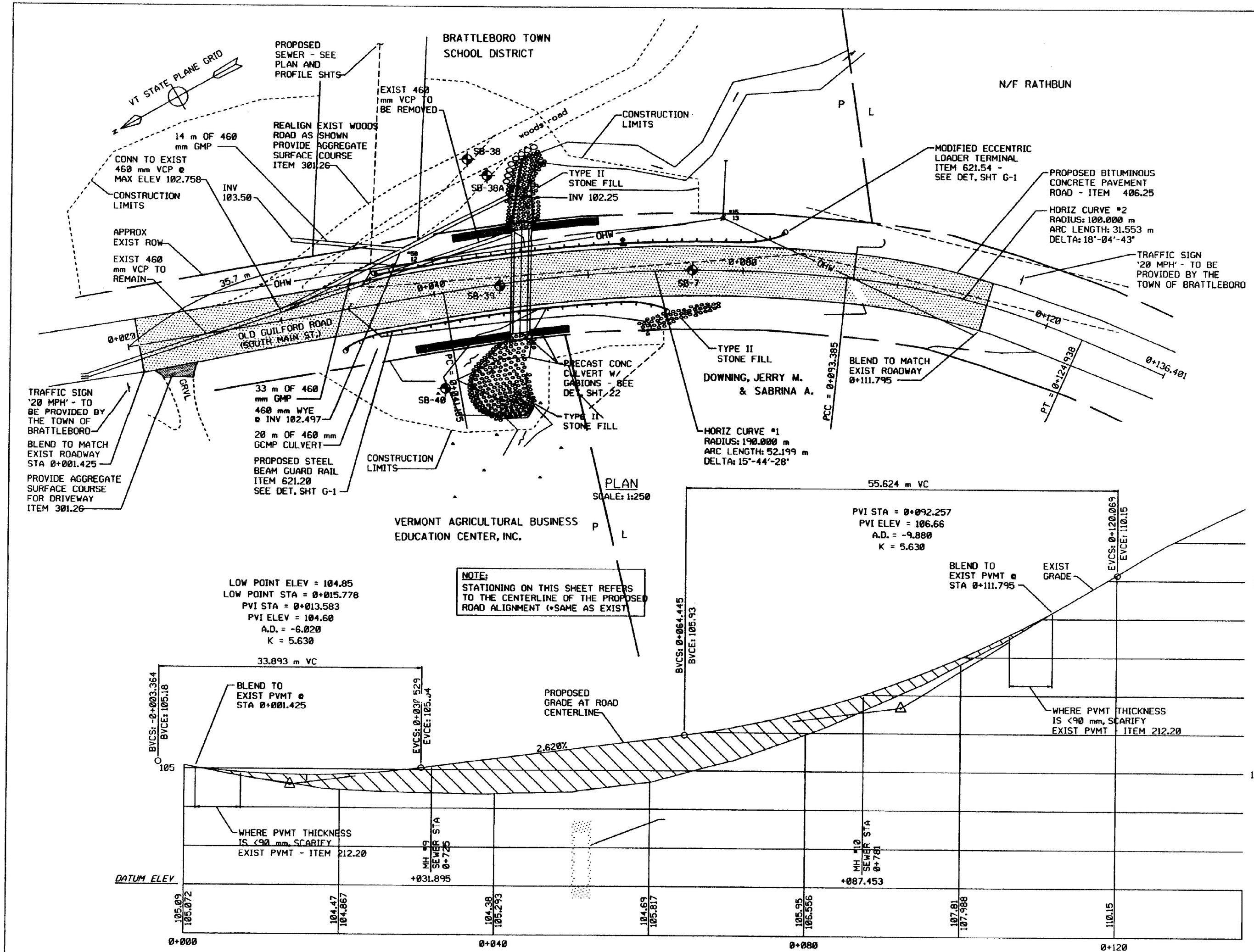

PROPOSED ROAD PROFILE
SCALE: 1:250 H
1:50 V

FOR R.O.W. USE ONLY

0911028 200 H.P.
/prop/91a239/ra239121.i

NO.	DATE	REVISIONS	DRWN	CHKD

TIMOTHY D. SMITH & ASSOCIATES, PC
OLD RAILROAD STATION
802-442-8454
ARCHITECTS
NORTH BENNINGTON, VERMONT 05257
FAX 802-442-8842

WRIGHT ENGINEERING, LTD.
126 MERCHANTS ROW - P.O. BOX 174
802-775-2611
CIVIL ENGINEERS
RUTLAND, VERMONT 05701-0174
FAX 802-775-0915

PROJECT NO.IM 091-1 (29)
WATER & SEWER EXTENSION PROJECT
TOWN OF GUILFORD
TOWN OF BRATTLEBORO

SHEET TITLE: OLD GUILFORD ROAD REALIGNMENT

DSGN BY:	JAC
DRWN BY:	DSM
CHKD BY:	JAC
CHKD BY:	MPY

STATE OF VERMONT
AGENCY OF TRANSPORTATION
SOUTHEAST VERMONT WELCOME CENTER
GUILFORD, VERMONT

DATE: 11-8-95

R.O.W. SHEET 7 OF 15 SHEETS
SHEET ~~46~~ 47 OF ~~54~~ 55

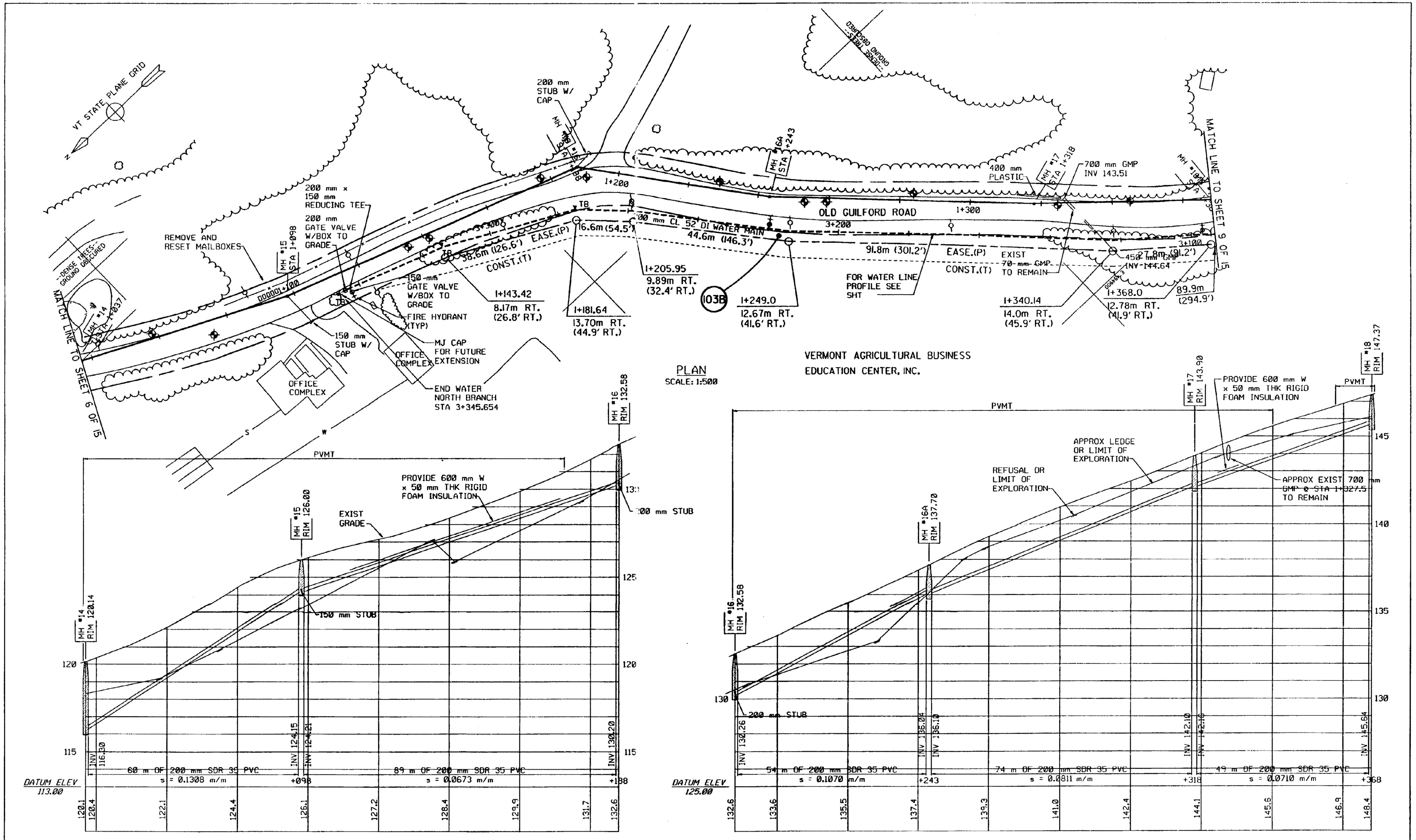

FOR R.O.W. USE ONLY

0911028 200 H.P.
/prop/91a239/ra239p4.1

NO.	DATE	REVISIONS	DRWN	CHKD

TIMOTHY D. SMITH & ASSOCIATES, PC
OLD RAILROAD STATION
802-442-6164

WRIGHT ENGINEERING, LTD.
126 MERCHANTS ROW - P.O. BOX 176
802-775-2611

ARCHITECTS
NORTH BENNINGTON, VERMONT 05257
FAX 802-442-6241

CIVIL ENGINEERS
RUTLAND, VERMONT 05702-0176
FAX 802-775-0915

PROJECT NO.IM 091-1 (29)
WATER & SEWER EXTENSION PROJECT
TOWN OF GUILFORD
TOWN OF BRATTLEBORO

SHEET TITLE: SANITARY SEWER/WATER PLAN AND SANITARY SEWER PROFILE

DSGN BY:	JAC
DRWN BY:	DSM
CHKD BY:	JAC
CHKD BY:	MPY

STATE OF VERMONT
AGENCY OF TRANSPORTATION
SOUTHEAST VERMONT WELCOME CENTER
GUILFORD, VERMONT

DATE: 6-07-95

R.O.W. SHEET 8 OF 15 SHEETS
SHEET ~~47~~ 48 OF ~~54~~ 55

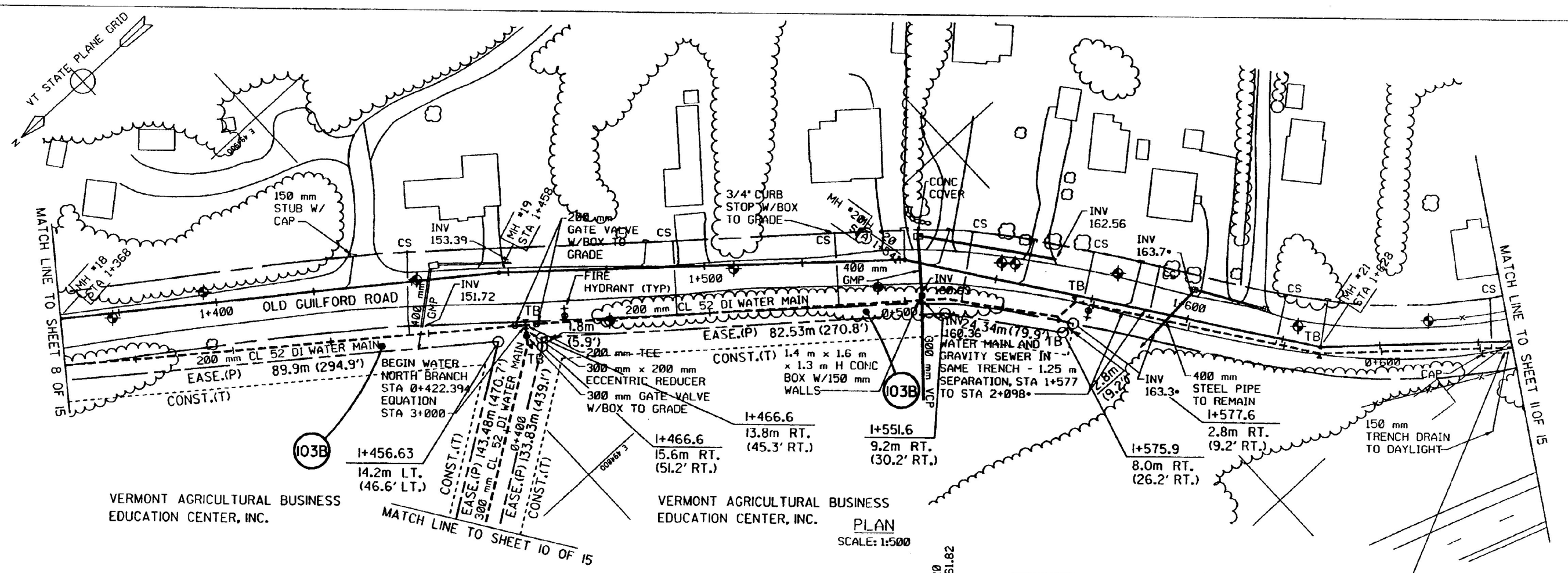

PLAN
SCALE: 1:500

NOTES:
1. ALL SEWER SERVICE STUBS ARE 100 mm UNLESS OTHERWISE NOTED
2. ALL WATER SERVICES ARE 3/4" TYPE K COPPER WITH 3/4" CURB STOP W/BOX TO GRADE UNLESS OTHERWISE NOTED

NOTE:
CONTRACTOR TO INSTALL 100 mm CL 52 DI WATER MAIN BESIDE THE 200 mm CL 52 DI WATER MAIN FROM STA 0+620 TO STA 0+960 PER DETAIL ON SHT . BOTH ENDS OF OF PIPE TO BE VALVED AND CAPPED. ALL WATER SERVICES BETWEEN THESE STATIONS TO BE OFF 4" MAIN

NOTE:
WHERE GRAVITY SEWER & WATER MAIN ARE IN SAME TRENCH (STA 1+577 TO STA 2+098±) MIN 2.1 m OF COVER SHALL BE MAINTAINED OVER THE SEWER

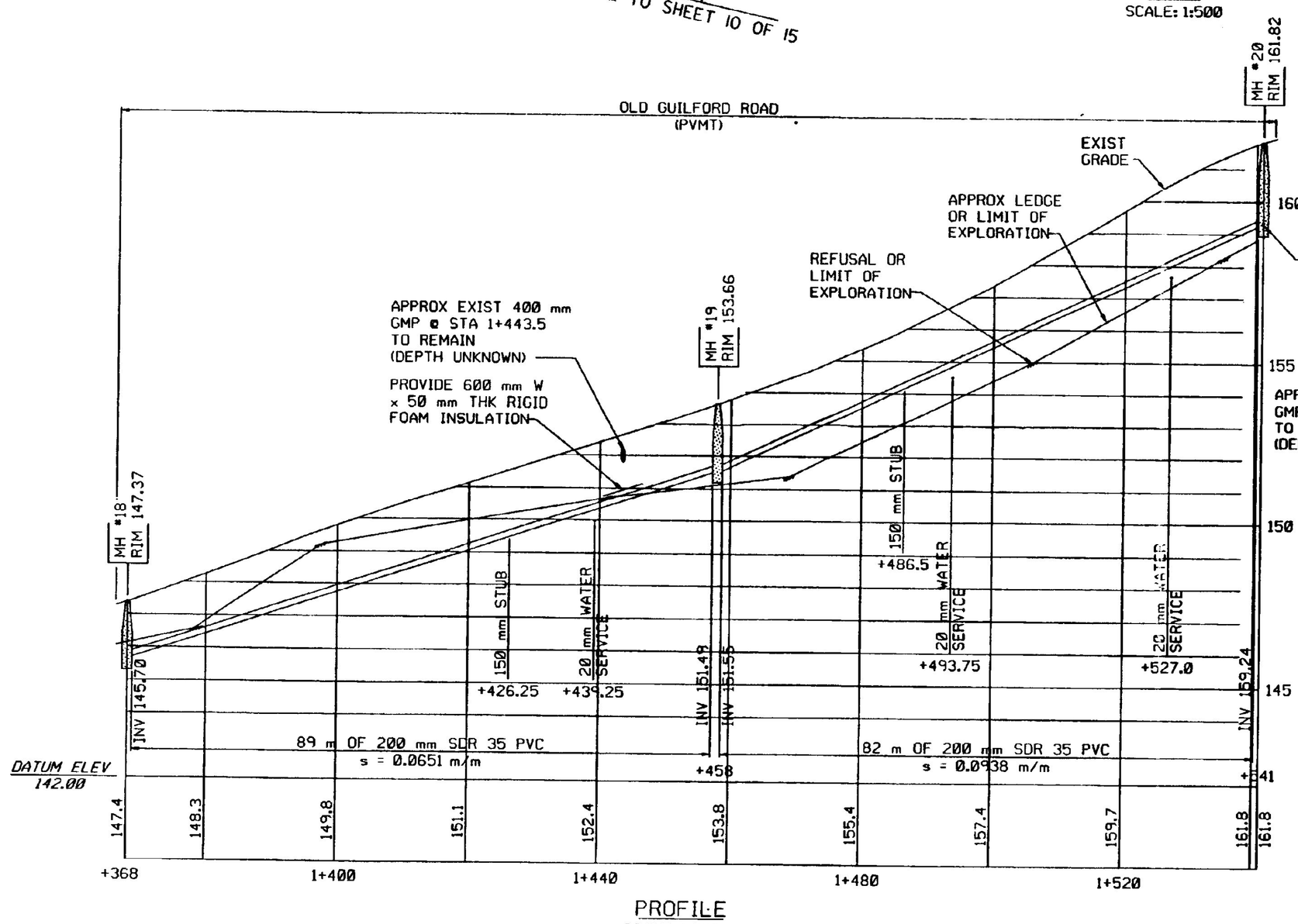

PROFILE
SCALE: 1:500 H
1:100 V

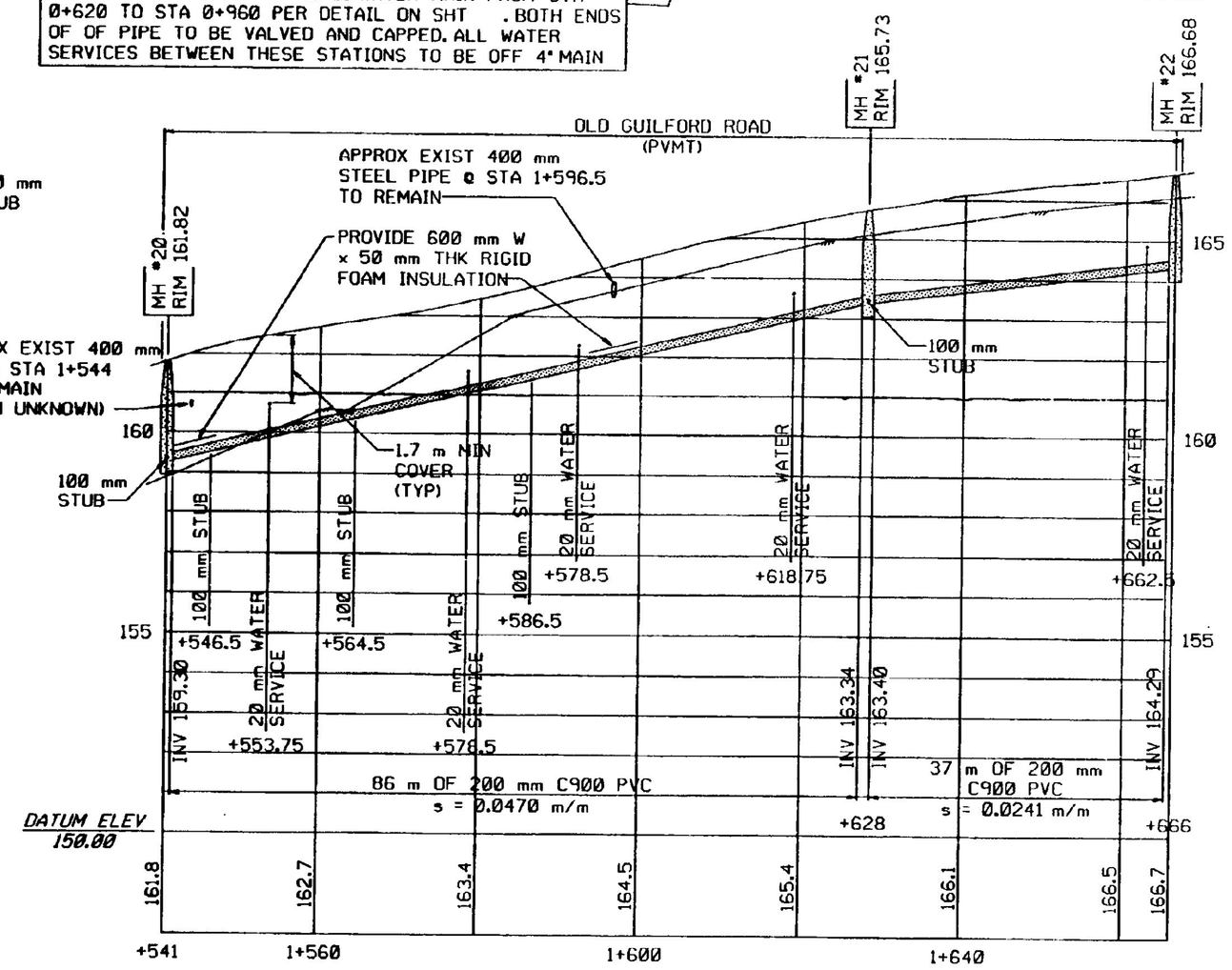

PROFILE
SCALE: 1:500 H
1:100 V

FOR R.O.W. USE ONLY

0911028 200 H.P.
/prop/91a239/ra239p5.i

NO.	DATE	REVISIONS	DRWN	CHKD

TIMOTHY D. SMITH & ASSOCIATES, PC
OLD RAILROAD STATION
802-442-8184
ARCHITECTS
NORTH BENNINGTON, VERMONT 05257
FAX 802-442-5241

WRIGHT ENGINEERING, LTD.
136 MERCHANTS ROW - P.O. BOX 176
802-775-2611
CIVIL ENGINEERS
RUTLAND, VERMONT 05702-0176
FAX 802-775-0915

PROJECT NO.IM 091-1 (39)
WATER & SEWER EXTENSION PROJECT
TOWN OF GUILFORD
TOWN OF BRATTLEBORO

SHEET TITLE: SANITARY SEWER/WATER PLAN AND SANITARY SEWER PROFILE

DSGN BY:	JAC
DRWN BY:	DSM
CHKD BY:	JAC
CHKD BY:	MPY
DATE:	6-07-95

STATE OF VERMONT
AGENCY OF TRANSPORTATION
SOUTHEAST VERMONT WELCOME CENTER
GUILFORD, VERMONT

R.O.W. SHEET 9 OF 15 SHEETS
SHEET ~~48~~ 49 OF ~~54~~ 55

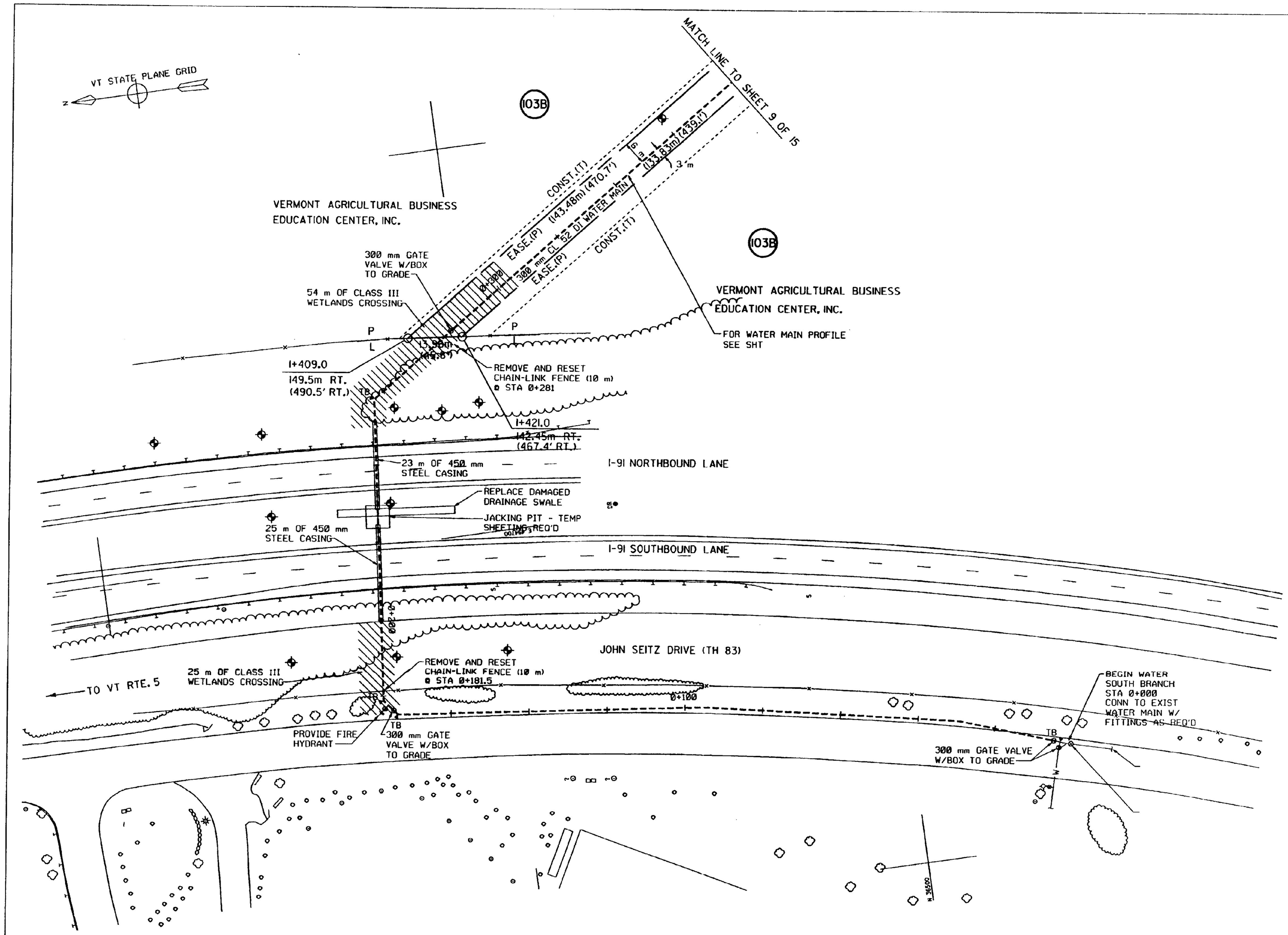

FOR R.O.W. USE ONLY

09111028 200 H.P.
/prop/91a239/ra239pl2.i

NO.	DATE	REVISIONS	DRWN	CHKD

TIMOTHY D.SMITH & ASSOCIATES, PC
OLD RAILROAD STATION
802-442-8184
ARCHITECTS
NORTH BENNINGTON, VERMONT 05257
FAX 802-442-8242

WRIGHT ENGINEERING, LTD.
138 MERCHANTS ROW - P.O.BOX 176
802-775-2411
CIVIL ENGINEERS
RUTLAND, VERMONT 05702-0176
FAX 802-775-0915

PROJECT NO.IM 091-1 (39)

WATER & SEWER EXTENSION PROJECT

TOWN OF GUILFORD
TOWN OF BRATTLEBORO

SHEET TITLE: WATER MAIN PLAN

DSGN BY:	JAC
DRWN BY:	DSM
CHKD BY:	JAC
CHKD BY:	MPY
DATE:	6-07-95

STATE OF VERMONT
AGENCY OF TRANSPORTATION
SOUTHEAST VERMONT WELCOME CENTER
GUILFORD, VERMONT

R.O.W. SHEET 10 OF 15 SHEETS
SHEET ~~49~~ OF ~~54~~

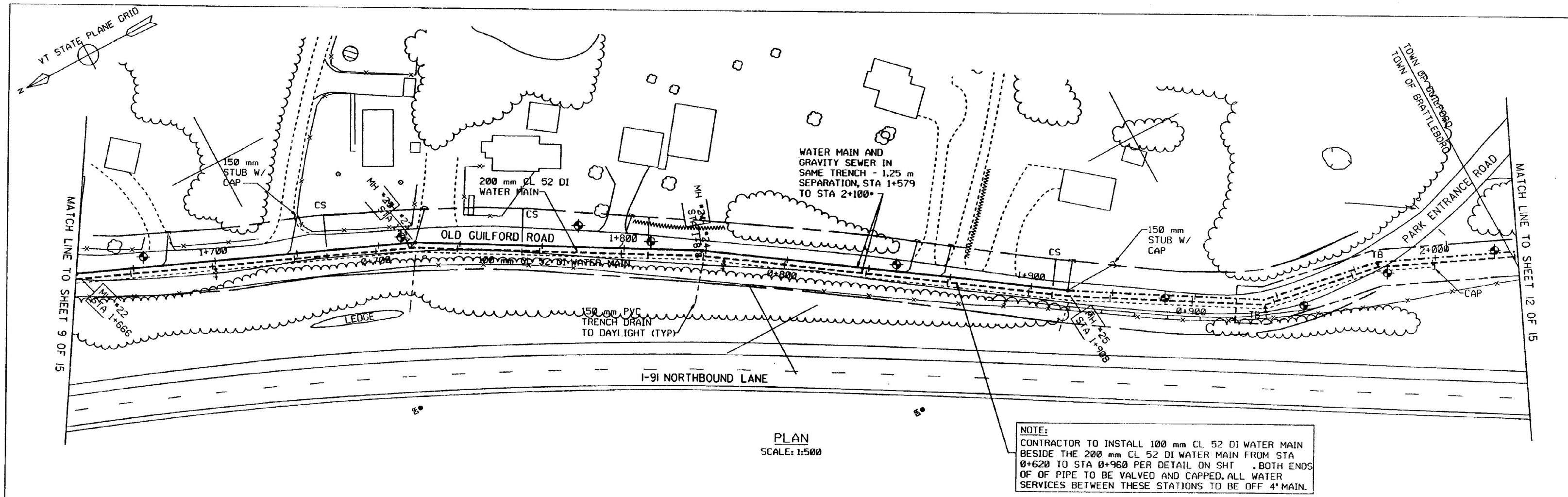

PLAN
SCALE: 1:500

NOTE:
CONTRACTOR TO INSTALL 100 mm CL 52 DI WATER MAIN BESIDE THE 200 mm CL 52 DI WATER MAIN FROM STA 0+620 TO STA 0+960 PER DETAIL ON SHT . BOTH ENDS OF OF PIPE TO BE VALVED AND CAPPED. ALL WATER SERVICES BETWEEN THESE STATIONS TO BE OFF 4" MAIN.

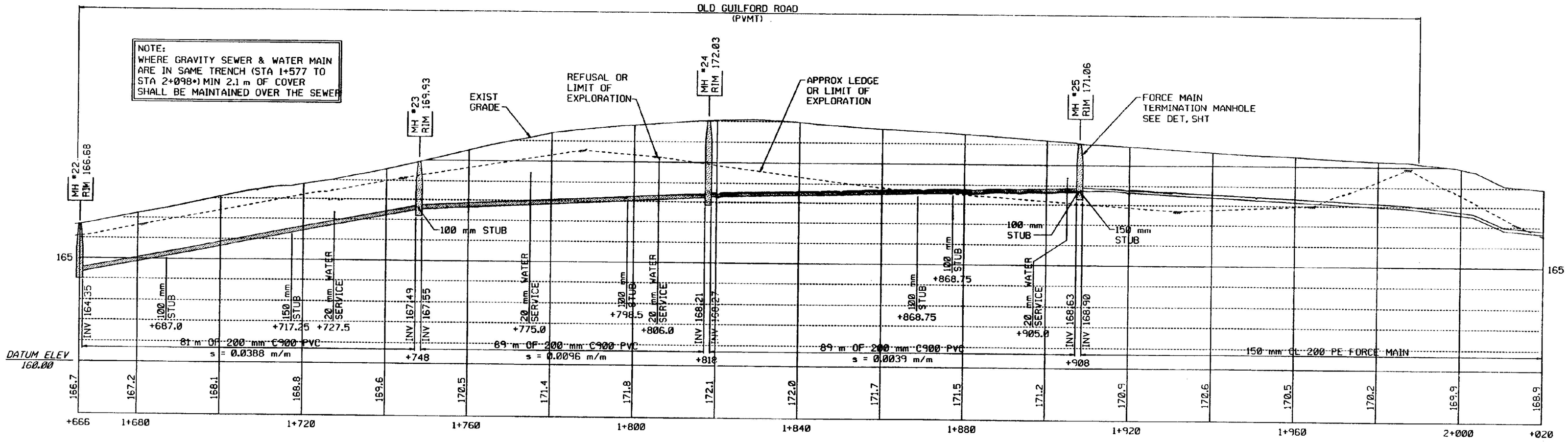

PROFILE
SCALE: 1:500 H
1:100 V

FOR R.O.W. USE ONLY

09110Z8 200 H.P.
/prop/9la239/ra239p6.1

NO.	DATE	REVISIONS	DRWN	CHKD

TIMOTHY D. SMITH & ASSOCIATES, PC
OLD RAILROAD STATION
802-442-5184
WRIGHT ENGINEERING, LTD.
138 MERCHANTS ROW - P.O. BOX 176
802-775-2511

ARCHITECTS
NORTH BENNINGTON, VERMONT 05257
FAX 802-442-5541
CIVIL ENGINEERS
RUTLAND, VERMONT 05702-0176
FAX 802-775-0915

PROJECT NO.IM 091-1 (29)
WATER & SEWER EXTENSION PROJECT
TOWN OF GUILFORD
TOWN OF BRATTLEBORO
SHEET TITLE: SANITARY SEWER/WATER PLAN AND SANITARY SEWER PROFILE

DSGN BY:	JAC
DRWN BY:	DSM
CHKD BY:	JAC
CHKD BY:	MPY
DATE:	6-07-95

STATE OF VERMONT
AGENCY OF TRANSPORTATION
SOUTHEAST VERMONT WELCOME CENTER
GUILFORD, VERMONT
R.O.W. SHEET 11 OF 15 SHEETS
SHEET ~~50~~ 51 OF ~~54~~ 55

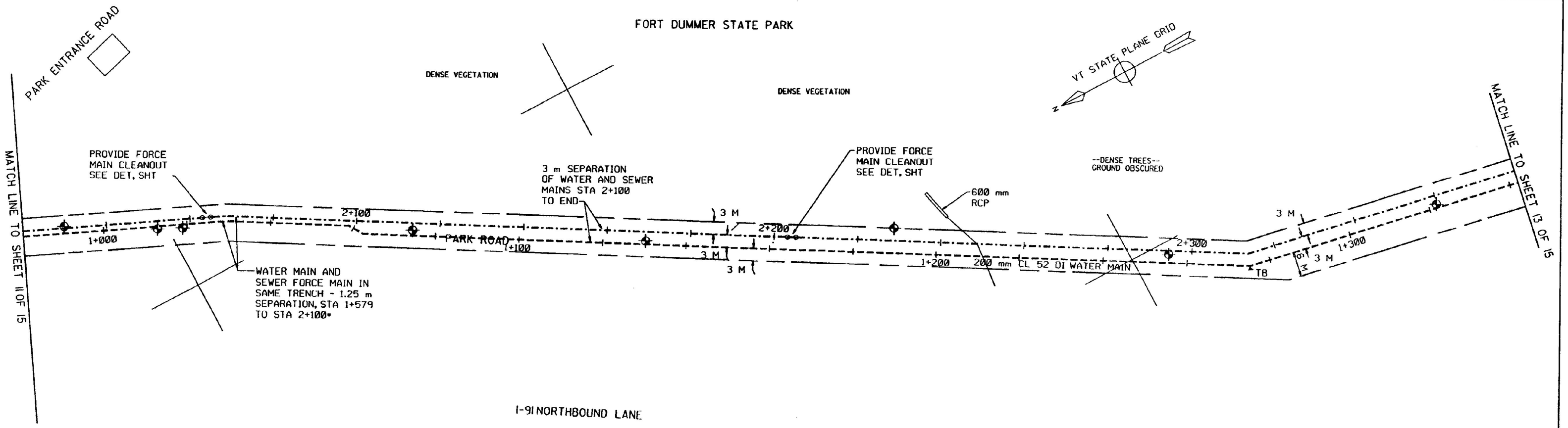

PLAN
SCALE: 1:500

NOTE:
WHERE GRAVITY SEWER & WATER MAIN ARE IN SAME TRENCH (STA 1+577 TO STA 2+098±) MIN 2.1 m OF COVER SHALL BE MAINTAINED OVER THE SEWER

NOTE:
WHERE GRAVITY SEWER & WATER MAIN ARE NOT IN SAME TRENCH 1.5 m OF COVER SHALL BE MAINTAINED OVER THE SEWER

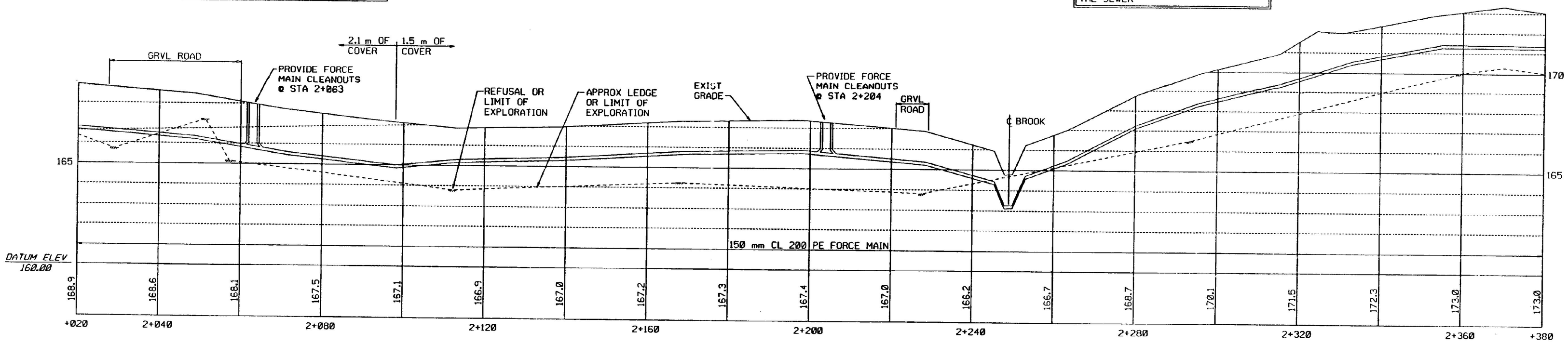

PROFILE
SCALE: 1:500 H
1:100 V

FOR R.O.W. USE ONLY

0911028 200 H.P.
/prop/91a239/ra239p7.i

NO.	DATE	REVISIONS	DRWN	CHKD

TIMOTHY D. SMITH & ASSOCIATES, PC
OLD RAILROAD STATION
802-442-8184
WRIGHT ENGINEERING, LTD.
136 MERCHANTS ROW - P.O. BOX 176
802-775-2611
ARCHITECTS
NORTH BENNINGTON, VERMONT 05257
FAX 802-442-8842
CIVIL ENGINEERS
RUTLAND, VERMONT 05702-0176
FAX 802-775-9765

PROJECT NO.	IM 091-1 (29)
	WATER & SEWER EXTENSION PROJECT
	TOWN OF GUILFORD
	TOWN OF BRATTLEBORO
SHEET TITLE:	SANITARY SEWER/WATER PLAN AND SANITARY SEWER PROFILE
DSGN BY:	JAC
DRWN BY:	DSM
CHKD BY:	JAC
CHKD BY:	MPY

STATE OF VERMONT
AGENCY OF TRANSPORTATION
SOUTHEAST VERMONT WELCOME CENTER
GUILFORD, VERMONT
DATE: 6-07-95
R.O.W. SHEET 12 OF 15 SHEETS
SHEET ~~51~~ OF ~~54~~
52 55

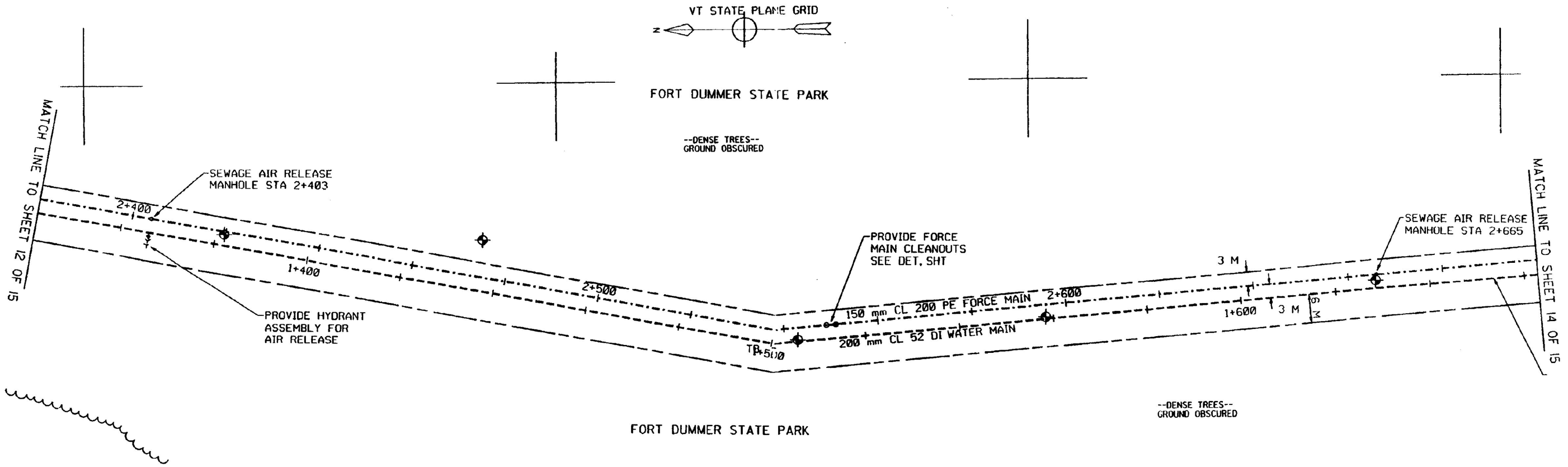

PLAN
SCALE: 1:500

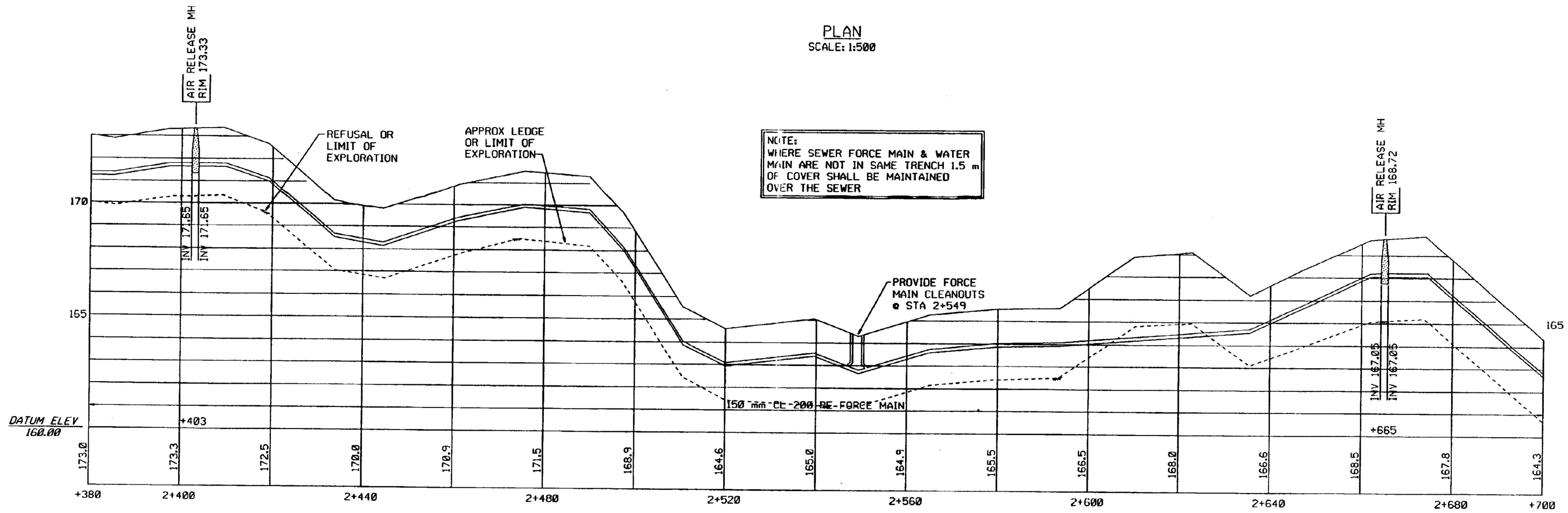

PROFILE
SCALE: 1:500 H
1:100 V

FOR R.O.W. USE ONLY

0911028 200 H.P.
/prop/91a239/ra239p8.1

NO.	DATE	REVISIONS	DRWN	CHKD

TIMOTHY D. SMITH & ASSOCIATES, PC
OLD RAILROAD STATION
802-442-8184

WRIGHT ENGINEERING, LTD.
136 MERCHANTS ROW - P.O. BOX 176
802-775-2411

ARCHITECTS
NORTH BENNINGTON, VERMONT 05257
FAX 802-442-6846

CIVIL ENGINEERS
RUTLAND, VERMONT 05702-0176
FAX 802-775-0915

PROJECT NO.IM 091-1 (29)
WATER & SEWER EXTENSION PROJECT
TOWN OF GUILFORD
TOWN OF BRATTLEBORO

SHEET TITLE: SANITARY SEWER/WATER PLAN AND SANITARY SEWER PROFILE

DSGN BY:	JAC
DRWN BY:	DSM
CHKD BY:	JAC
CHKD BY:	MPY
DATE:	6-07-95

STATE OF VERMONT
AGENCY OF TRANSPORTATION
SOUTHEAST VERMONT WELCOME CENTER
GUILFORD, VERMONT

R.O.W. SHEET 13 OF 15 SHEETS
SHEET ~~52~~ OF ~~54~~
53 55

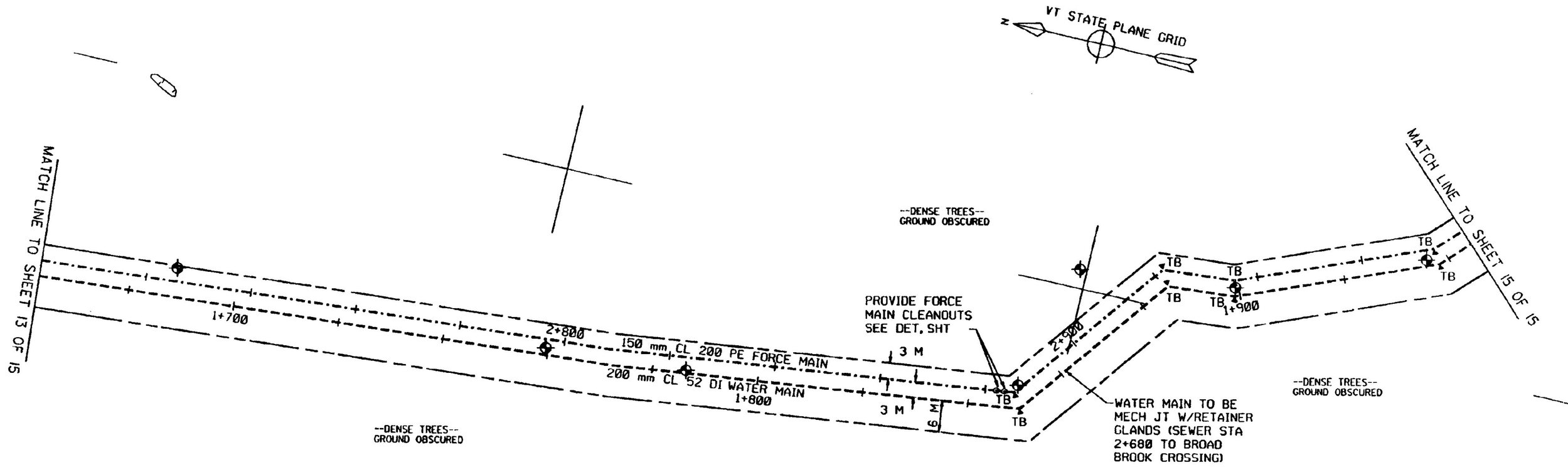

NOTE:
WHERE SEWER FORCE MAIN & WATER MAIN ARE NOT IN SAME TRENCH 1.5 m OF COVER SHALL BE MAINTAINED OVER THE SEWER

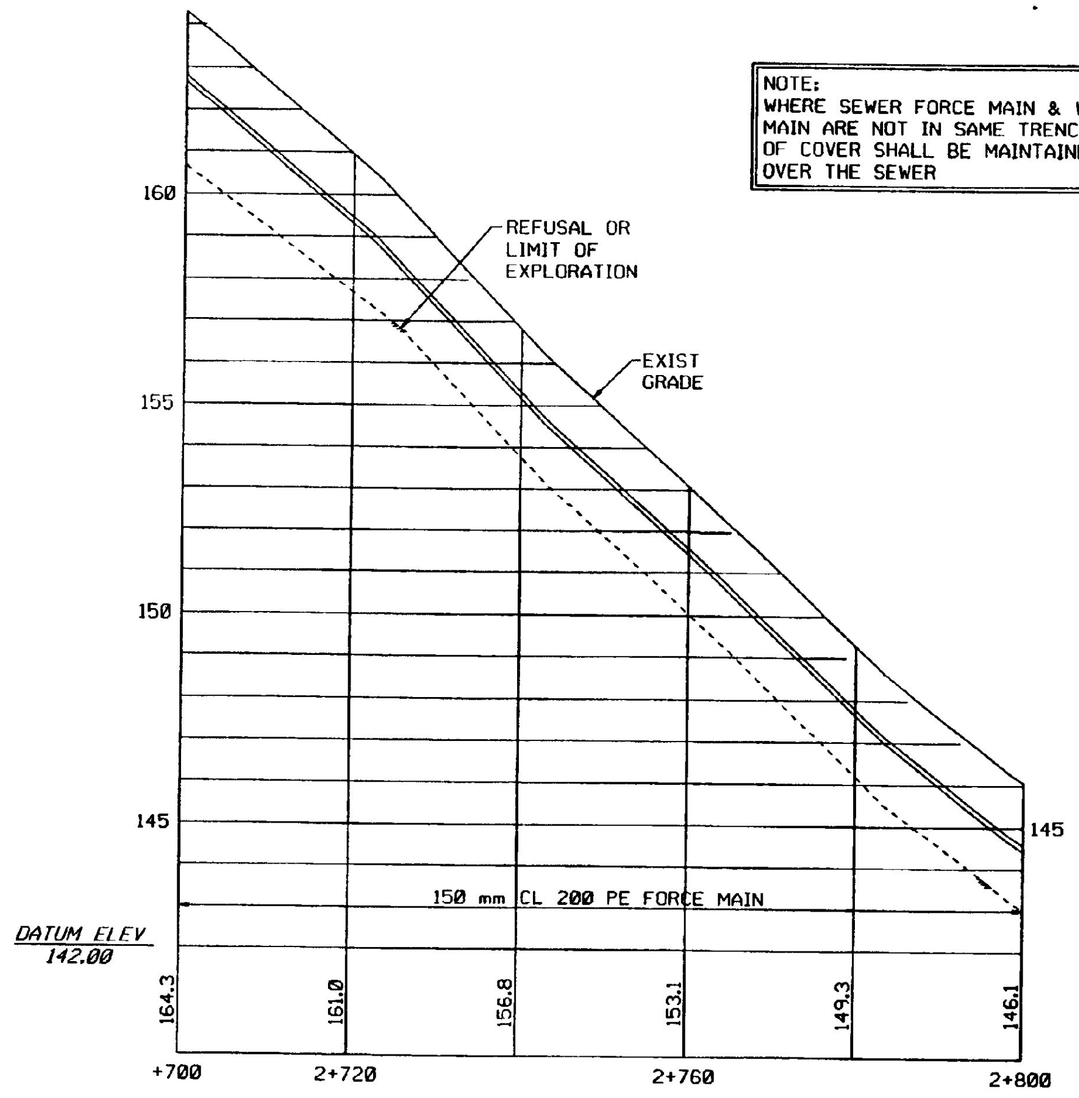

PROFILE
SCALE: 1:500 H
1:100 V

PLAN
SCALE: 1:500

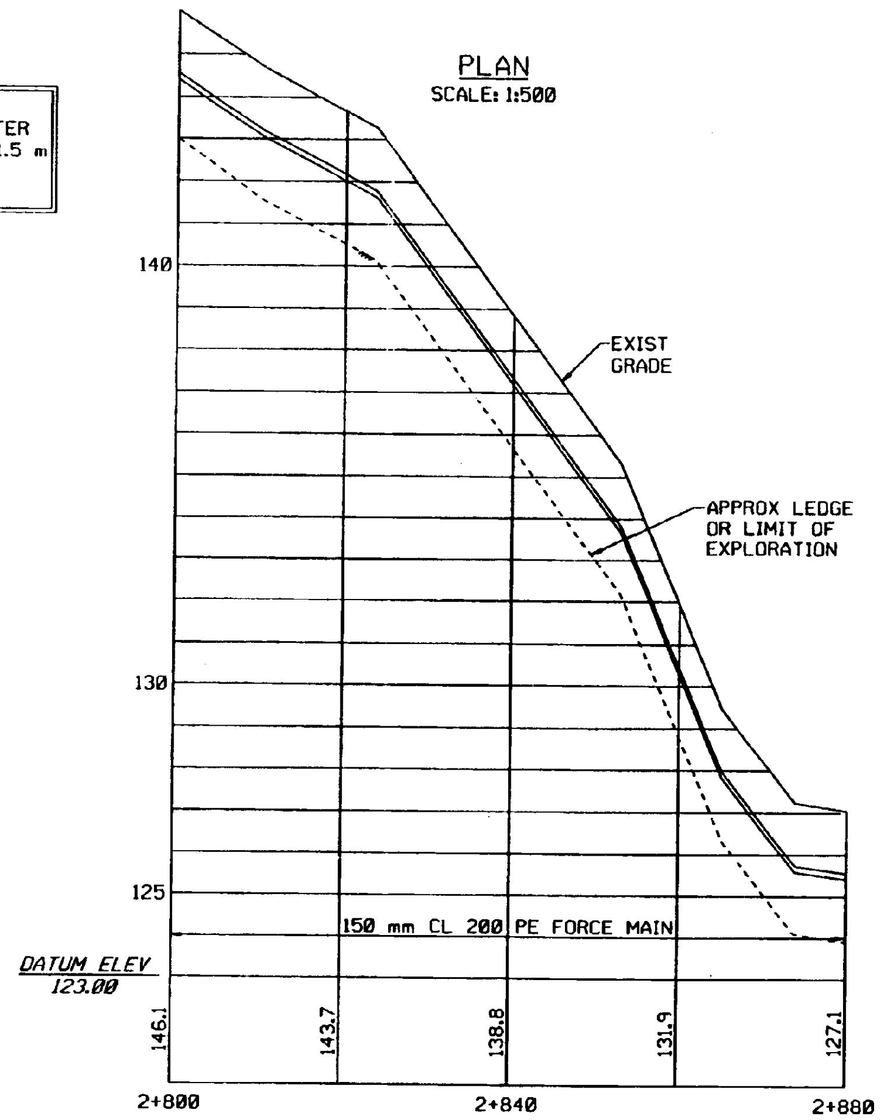

PROFILE
SCALE: 1:500 H
1:100 V

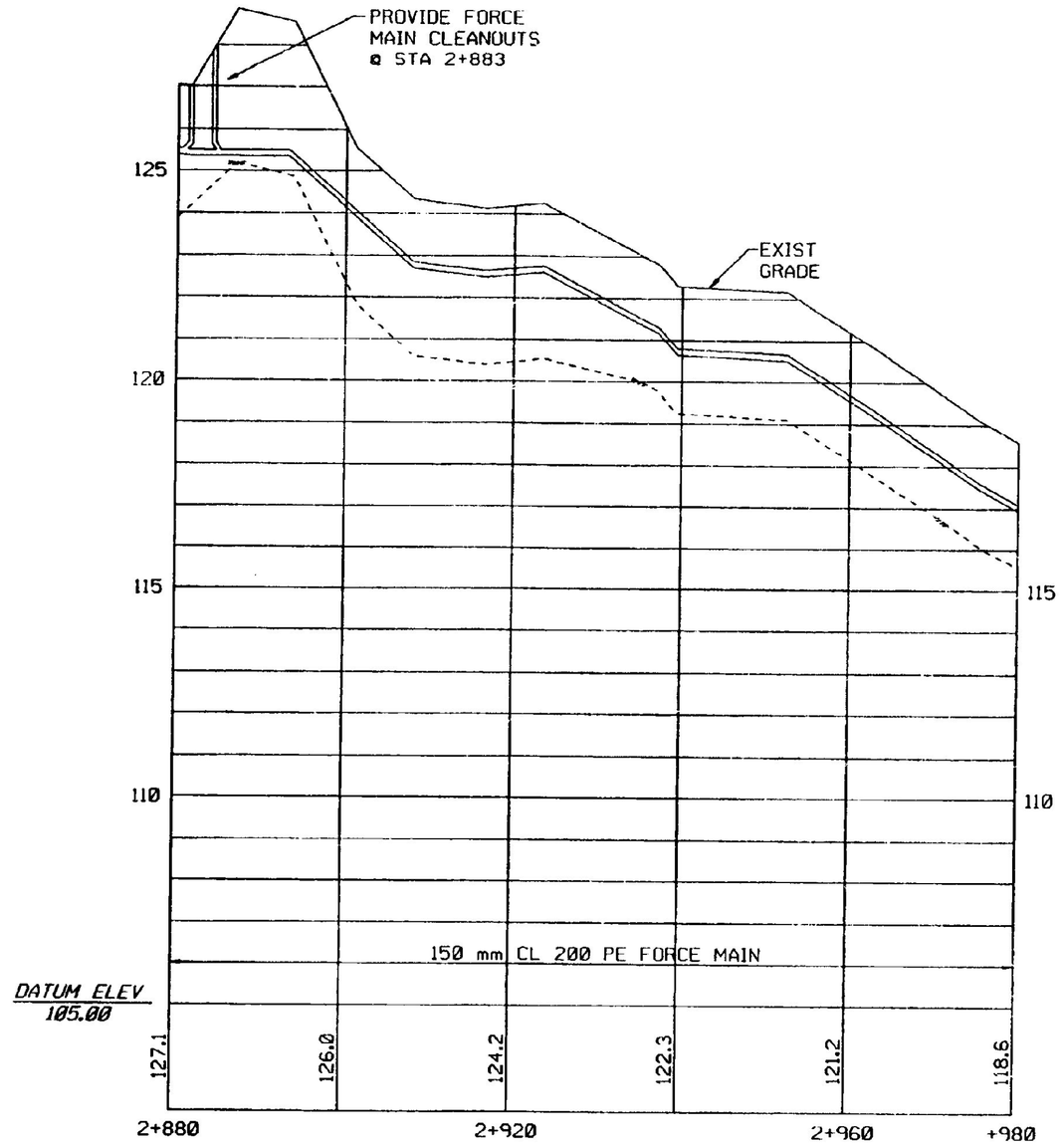

PROFILE
SCALE: 1:500 H
1:100 V

FOR R.O.W. USE ONLY

0911028 200 H.P.
/prop/91a239/ra239p9.i

NO.	DATE	REVISIONS	DRWN	CHKD

TIMOTHY D. SMITH & ASSOCIATES, PC
OLD RAILROAD STATION
802-442-8824

WRIGHT ENGINEERING, LTD.
136 MERCHANTS ROW - P.O. BOX 176
802-775-2611

ARCHITECTS
NORTH BENNINGTON, VERMONT 05257
FAX 802-442-8842

CIVIL ENGINEERS
RUTLAND, VERMONT 05702-0176
FAX 802-775-0916

PROJECT NO.IM 091-1 (29)

WATER & SEWER EXTENSION PROJECT

TOWN OF GUILFORD
TOWN OF BRATTLEBORO

SHEET TITLE: SANITARY SEWER/WATER PLAN AND SANITARY SEWER PROFILE

DSGN BY:	JAC
DRWN BY:	DSM
CHKD BY:	JAC
CHKD BY:	MPY
DATE:	6-07-95

STATE OF VERMONT
AGENCY OF TRANSPORTATION
SOUTHEAST VERMONT WELCOME CENTER
GUILFORD, VERMONT

R.O.W. SHEET 14 OF 15 SHEETS
SHEET ~~53~~ 54 OF ~~54~~ 55
54

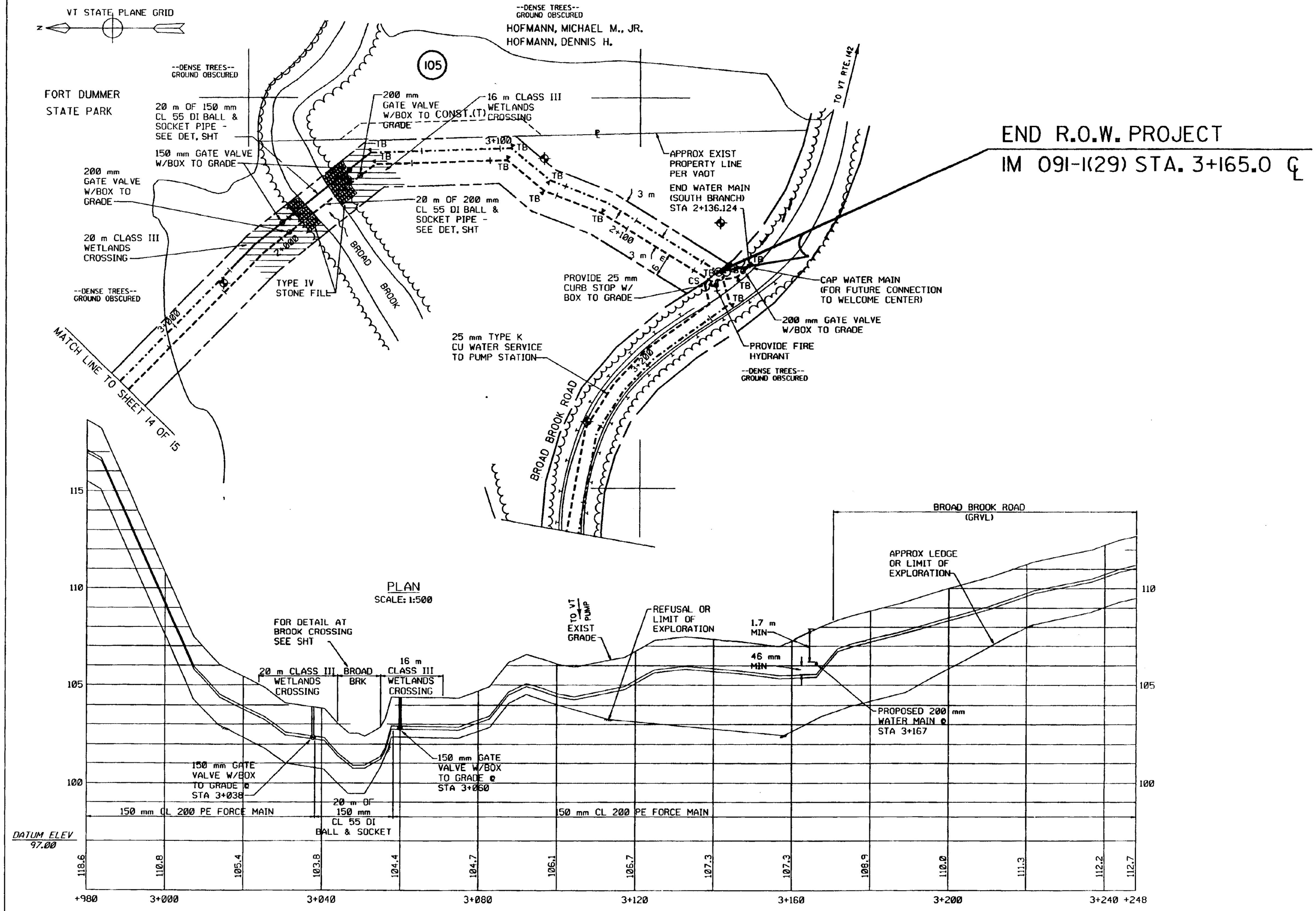

FOR R.O.W. USE ONLY

09110Z8 200 H.P.
/prop/91a239/ra239pl0.i

NO.	DATE	REVISIONS	DRWN	CHKD

TIMOTHY D. SMITH & ASSOCIATES, PC — ARCHITECTS
OLD RAILROAD STATION, NORTH BENNINGTON, VERMONT 05257
802-442-8184 FAX 802-442-5241

WRIGHT ENGINEERING, LTD. — CIVIL ENGINEERS
126 MERCHANTS ROW - P.O. BOX 176, RUTLAND, VERMONT 05702-0176
802-775-2411 FAX 802-775-8915

PROJECT NO.IM 091-1 (29)
WATER & SEWER EXTENSION PROJECT
TOWN OF GUILFORD
TOWN OF BRATTLEBORO

SHEET TITLE: SANITARY SEWER/WATER PLAN AND SANITARY SEWER PROFILE

DSGN BY:	JAC
DRWN BY:	DSM
CHKD BY:	JAC
CHKD BY:	MPY
DATE:	6-07-95

STATE OF VERMONT
AGENCY OF TRANSPORTATION
SOUTHEAST VERMONT WELCOME CENTER
GUILFORD, VERMONT

R.O.W. SHEET 15 OF 15 SHEETS
SHEET ~~54~~ OF ~~54~~
55 55

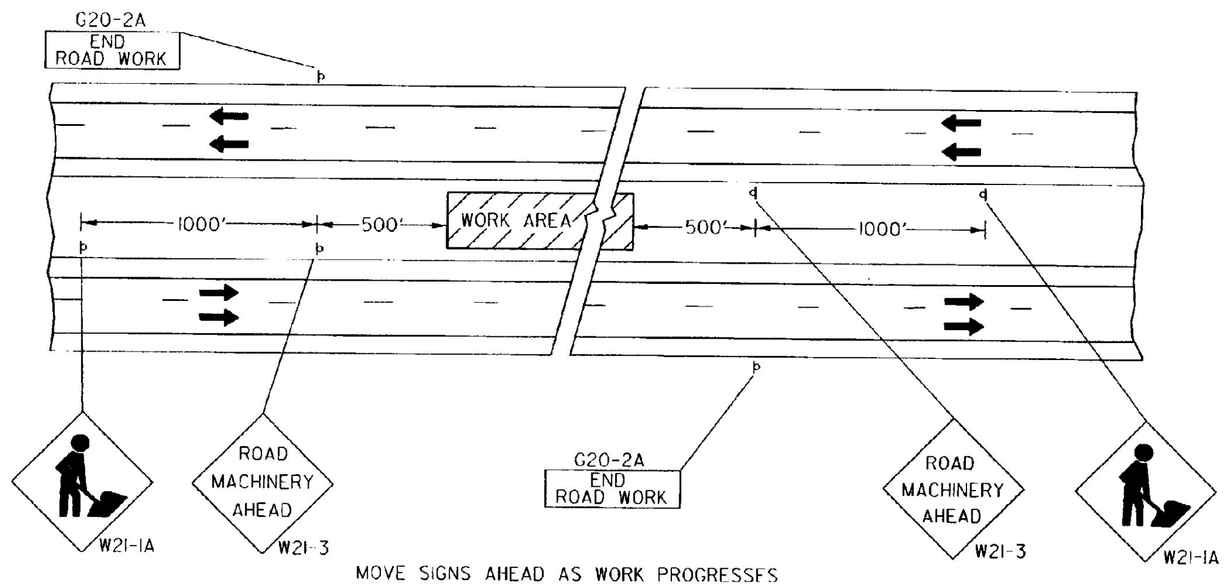

MOVE SIGNS AHEAD AS WORK PROGRESSES

4 - LANE HIGHWAY
MEDIAN MAITENANCE

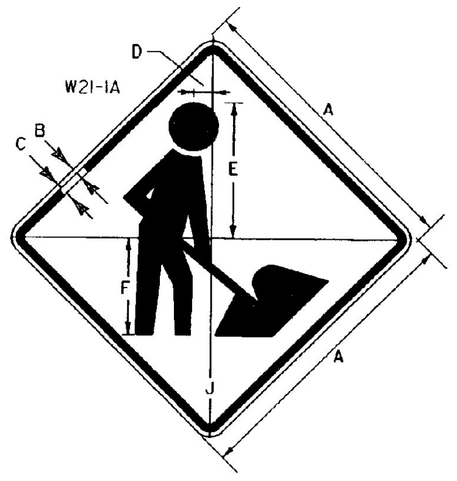

SIGN	DIMENSIONS (INCHES)							
	A	B	C	D	E	F		J
2 LANE	36	5/8	7/8	5 3/4	15 3/4	4 1/4		2 1/4
4 LANE	48	3/4	1 1/4	7 1/2	20	5		3

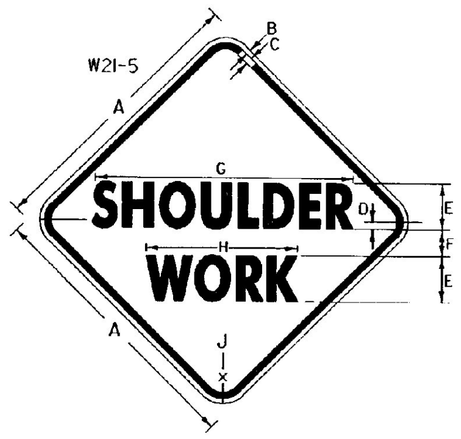

SIGN	DIMENSIONS (INCHES)								
	A	B	C	D	E	F	G	H	J
2 LANE	36	5/8	7/8	1	5-D	3 1/2	34 5/16	17 1/32	2 1/4
4 LANE	48	3/4	1 1/4	1	7-C	4	38 3/32	20 1/8	3

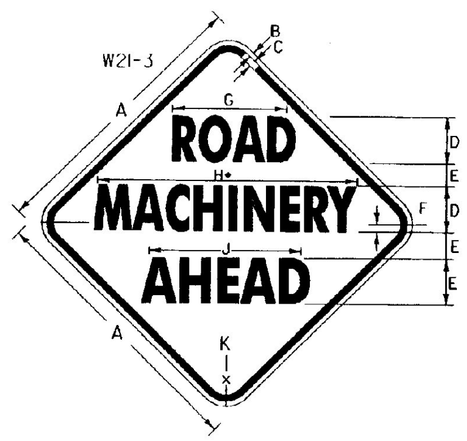

* REDUCE SPACING BY 40 %

SIGN	DIMENSIONS (INCHES)									
	A	B	C	D	E	F	G	H	J	K
2 LANE	36	5/8	1/8	5-D	4	2 1/2	17 1/4	34 3/16	2 1/32	2 1/4
4 LANE	48	3/4	1 1/4	7-D	5	3 1/2	24 1/8	48 1/4	31	3

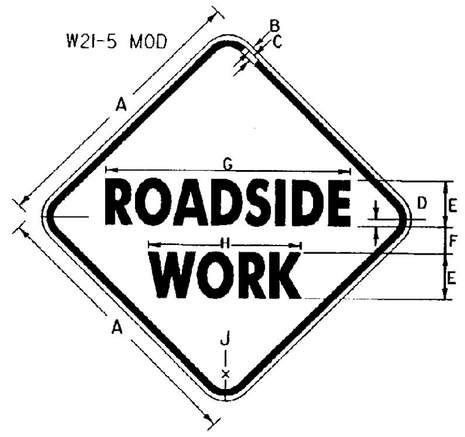

SIGN	DIMENSIONS (INCHES)								
	A	B	C	D	E	F	G	H	J
2 LANE	36	5/8	7/8	1/2	5-D	3 1/2	31 3/4	17 7/32	2 1/4
4 LANE	48	3/4	1 1/4	1	7-C	4	35 7/32	20 1/8	3

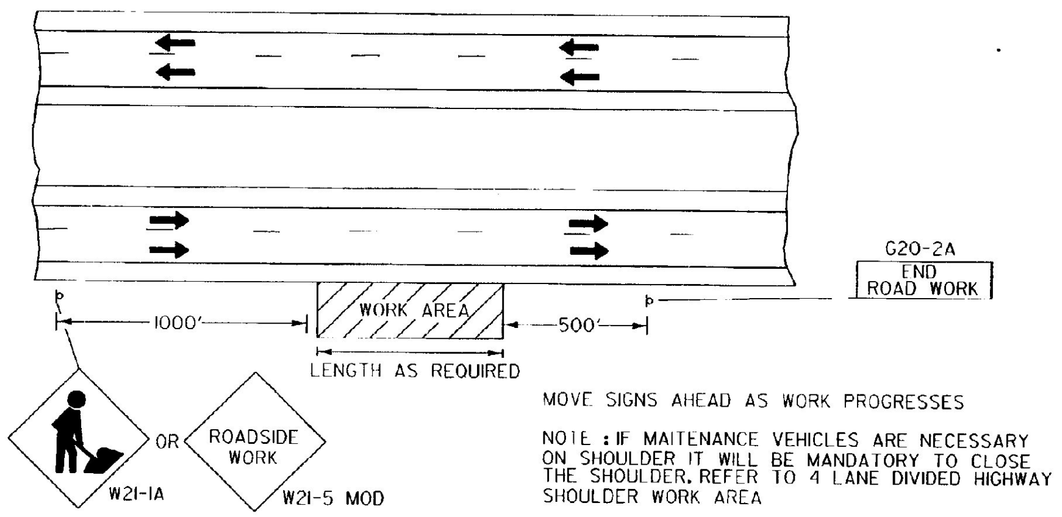

MOVE SIGNS AHEAD AS WORK PROGRESSES

NOTE : IF MAITENANCE VEHICLES ARE NECESSARY ON SHOULDER IT WILL BE MANDATORY TO CLOSE THE SHOULDER. REFER TO 4 LANE DIVIDED HIGHWAY SHOULDER WORK AREA

4 - LANE HIGHWAY
MAITENANCE OUTSIDE SHOULDER

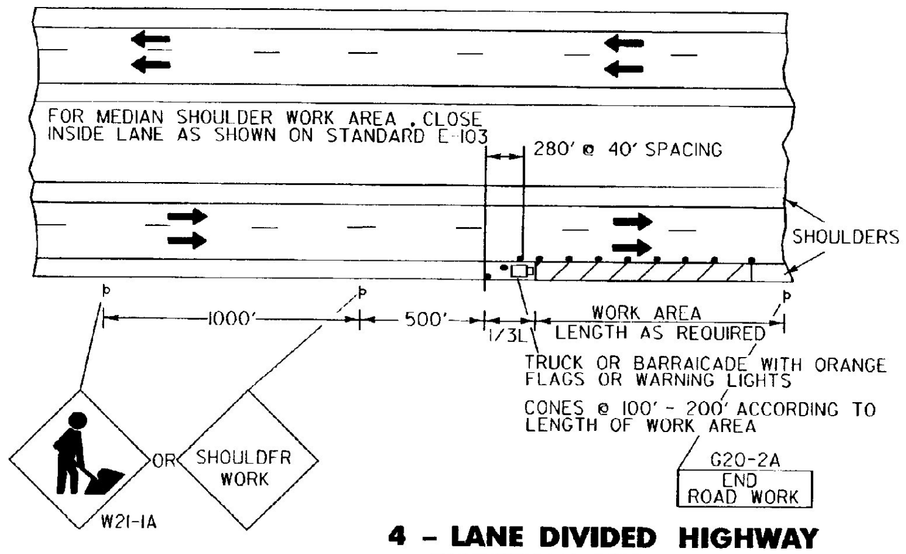

4 - LANE DIVIDED HIGHWAY
SHOULDER WORK AREA

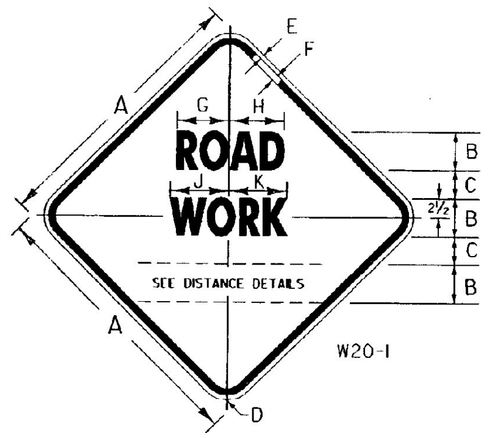

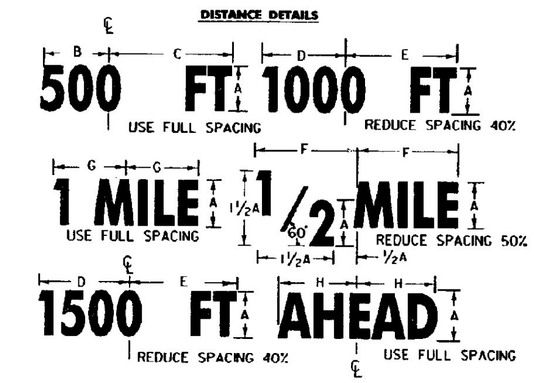

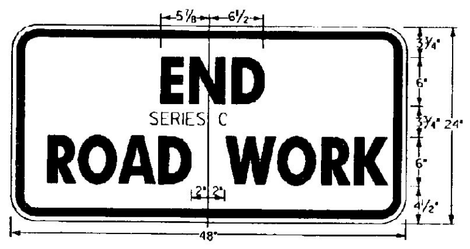

NOTES:

REFLECTORIZATION:
ALL REFLECTIVE MATERIAL SHALL CONSIST OF ENCAPSOLATED LENS REFLECTIVE SHEETING.THE TEXT AND BORDERS MAY BE SCREENED . LETTERING FILM . OR HAND PAINTED.

COLORS:
THE WARNING SIGNS SHOWN ON THIS SHEET SHALL HAVE A BLACK TEXT AND BORDER ON A REFLECTORIZED ORANGE BACKROUND. THE ORANGE SHALL CONFORM WITH THE STANDARD COLORS ADOPTED BY THE AMERICAN ASSOCIATION OF STATE HIGHWAY AND TRANSPORTATION OFFICIALS AND APPROVED BY THE U.S. DEPT. OF TRANSPORTATION , FEDERAL HIGHWAY ADMINITRATION.

TEXT DESIGN:
LETTERS , SPACING , AND TEXT DIMENSIONS SHALL CONFORM WITH THE STANDARD ALPHABETS AND DESIGN PRESCRIBED IN THE MANUAL ON UNIFORM TRAFFIC CONTROL DEVICES.

SPECIFICATIONS:
WARNING SIGNS SHALL MEET THE STANDARD STATE SPECIFICATIONS FOR SIGNS.

SIGN BASE MATERIAL:
THE SIGN BASE MATERIAL USED FOR THE WARNING SIGNS SHOWN ON THIS SHEET MAY BE OF ANY OF THE FOLLOWING , WITH MINIMUM THICKNESS AS NOTED:

	36X36	48X48	
(1) FLAT SHEET ALUMINUM	0.100	0.125	INCHES
(2) HIGH DENSITY OVERLAYED PLYWOOD	5/8	3/4	INCHES
(3) GALVANIZED SHEET STEEL	14	12	GAGE

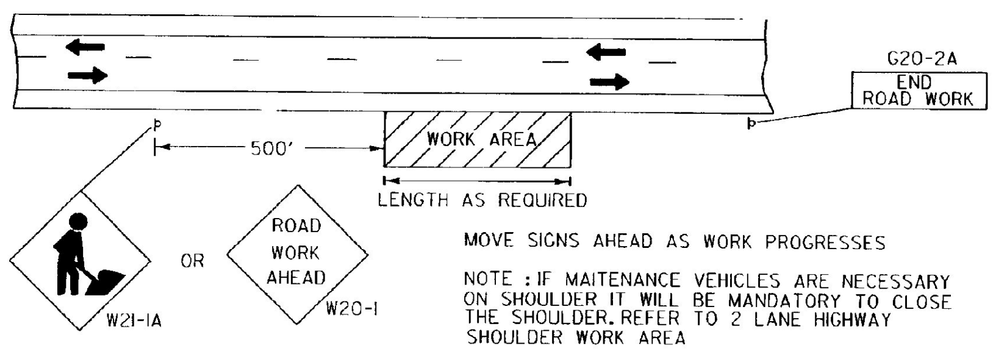

MOVE SIGNS AHEAD AS WORK PROGRESSES

NOTE : IF MAITENANCE VEHICLES ARE NECESSARY ON SHOULDER IT WILL BE MANDATORY TO CLOSE THE SHOULDER. REFER TO 2 LANE HIGHWAY SHOULDER WORK AREA

2 - LANE HIGHWAY
MAITENANCE OUTSIDE SHOULDER

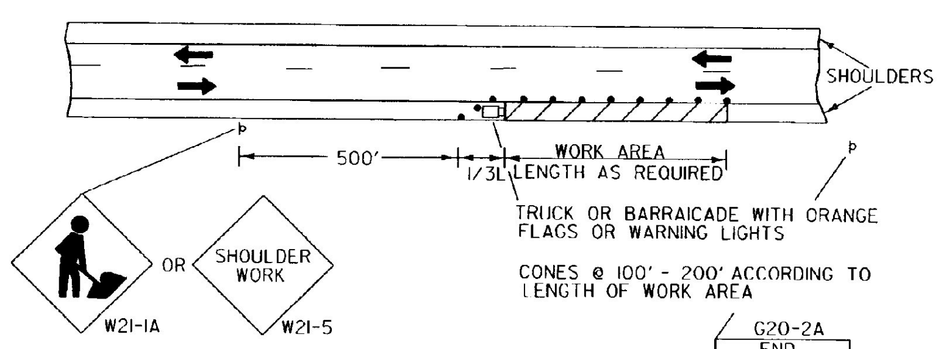

2 - LANE HIGHWAY
SHOULDER WORK AREA

REVISIONS AND CORRECTIONS
- JAN. 26, 1972 - DATE OF ORIGINAL ISSUE
- FEB. 29, 1972 - REVISED PER DIRECTION OF THE FEDERAL HIGHWAY ADMINISTRATION
- MAY 14, 1974 - REFLECTIVE MATERIAL CHANGE
- JUN. 8, 1977 - REFLECTIVE MATERIAL NOTE CHANGE SIGNS REFRENCED TO NUMBERS IN M.U.T.C.D.
- AUG. 10, 1977 - PERSON WORKING SIGN CHANGED TO SYMBOL
- DEC. 9, 1981 - MINOR SIGN DIMENTION CHANGES
- FEB. 3, 1986 - UPDATED TO 1986 SPECIFICATIONS
- AUG. 08, 1995 - UPDATED TO 1993 CHAPTER 6 - M.U.T.C.D.

APPROVED

DIRECTOR OF ENGINEERING

TRAFFIC AND SAFETY ENGINEER

APPROVED FOR THIS PROJECT AND/OR DESIGN IMPLEMENTATION. FHWA FINAL APPROVAL PENDING.

TRAFFIC SIGNS
TYPICAL MINOR MAINTENANCE OPERATION APPROACH SIGNS

/traf/std/stdel0.dgn : stdel0.i

OTHER STDS. REQUIRED: E-103

VERMONT AGENCY OF TRANSPORTATION

STANDARD
E-10

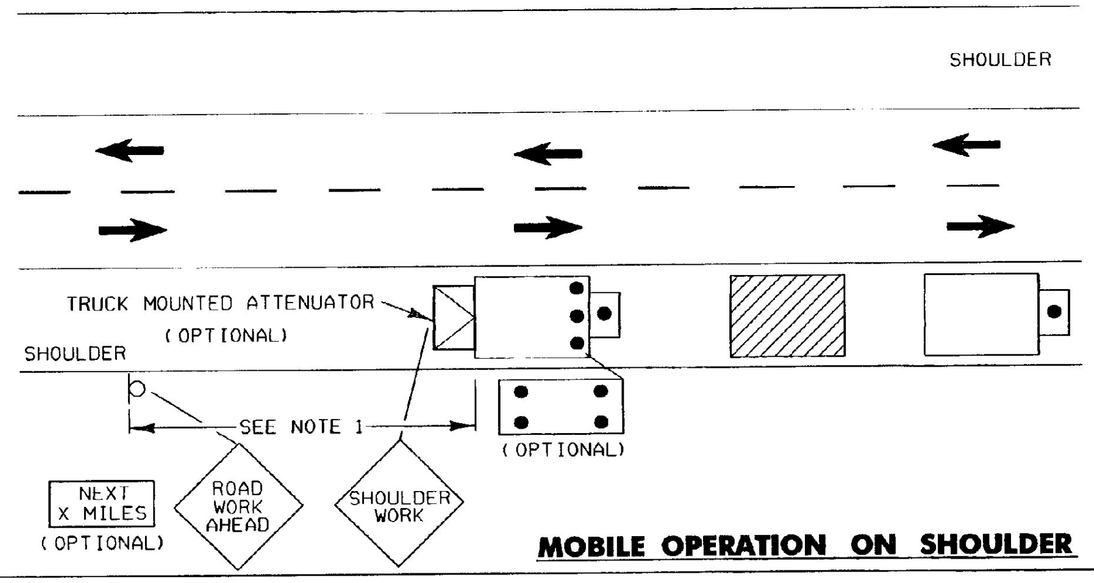

MOBILE OPERATION ON SHOULDER

NOTES:

1. IN SITUATIONS WHERE MULTIPLE WORK LOCATIONS IN A LIMITED DISTANCE MAKE IT PRACTICABLE TO PLACE STATIONARY SIGNS, THE MAXIMUM SPACING FOR THE ADVANCE OF THE WORK.
2. THE LENGTH OF ACTIVITY AREA SIGN MAY BE USED AS THE STATIONARY ADVANCE WARNING SIGN IF THE WORK LOCATIONS OCCUR OVER A DISTANCE OF MORE THAN 2 MILES.
3. WARNING SIGNS ARE NOT REQUIRED IF THE WORK VEHICLE DISPLAYS A FLASHING OR REVOLVING YELLOW LIGHT, IF THE DISTANCE BETWEEN WORK LOCATIONS IS 1 MILE OR MORE, AND IF THE WORK VEHICLE TRAVELS AT TRAFFIC SPEEDS BETWEEN LOCATIONS.

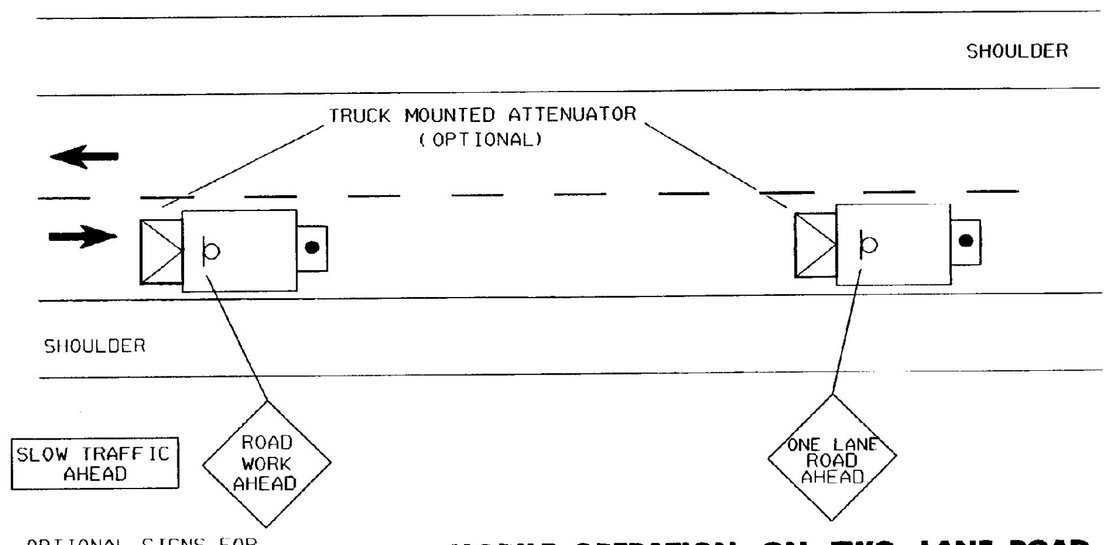

OPTIONAL SIGNS FOR SHORT DURATION OPERATION

MOBILE OPERATION ON TWO LANE ROAD

NOTES:

1. WHERE PRACTICABLE AND WHEN NEEDED, THE WORK AND PROTECTION VEHICLES SHOULD PULL OVER PERIODICALLY TO ALLOW TRAFFIC TO PASS. IF THIS CAN NOT BE DONE FREQUENTLY, AS AN ALTERNATIVE, A DO NOT PASS SIGN MAY BE PLACED ON THE REAR OF THE VEHICLE BLOCKING THE LANE.
2. THE DISTANCE BETWEEN THE WORK AND PROTECTION VEHICLES MAY VARY ACCORDING TO TERRAIN, PAINT DRYING TIME , AND OTHER FACTORS. PROTECTION VEHICLES ARE USED TO WARN TRAFFIC OF THE OPERATION AHEAD. WHENEVER ADEQUATE STOPPING SIGHT DISTANCE EXISTS TO THE REAR, THE PROTECTION VEHICLE SHOULD MAINTAIN THE MINIMUM DISTANCE AND PROCEED AT THE SAME SPEED AS THE WORK VEHICLE. THE PROTECTION VEHICLE SHOULD SLOW DOWN IN ADVANCE OF VERTICAL OR HORIZONTAL CURVES THAT RESTRICT SIGHT DISTANCE.
3. ADDITIONAL PROTECTION VEHICLES TO WARN AND REDUCE THE SPEED OF ONCOMING OR OPPOSING TRAFFIC MAY BE USED. POLICE PATROL CARS MAY BE USED FOR THIS PURPOSE.
4. A TRUCK - MOUNTED ATTENUATOR (TMA) SHALL BE USED ON THE PROTECTION VEHICLE AND SHOULD BE CONSIDERED ON THE WORK VEHICLE.
5. THE WORK VEHICLE SHALL BE EQUIPPED WITH BEACONS, AND THE PROTECTION VEHICLES SHALL BE EQUIPPED WITH A TMA AND TWO HIGH - INTENSITY FLASHING LIGHTS MOUNTED ON THE REAR, ADJACENT TO THE SIGN. PROTECTION AND WORK VEHICLES SHOULD DISPLAY FLASHING OR ROTATING BEACONS BOTH FORWARD AND TO THE REAR.
6. VEHICLE - MOUNTED SIGNS SHALL BE MOUNTED WITH THE BOTTOM OF THE SIGN, AT A MINIMUM HEIGHT OF 4 FEET ABOVE THE PAVEMENT. SIGN LEGENDS SHALL BE COVERED OR TURNED FROM VIEW WHEN WORK IS NOT IN PROGRESS.
7. ARROW DISPLAYS ARE OPTIONAL AND SHOULD BE TYPE B, 60 INCHES BY 30 INCHES.

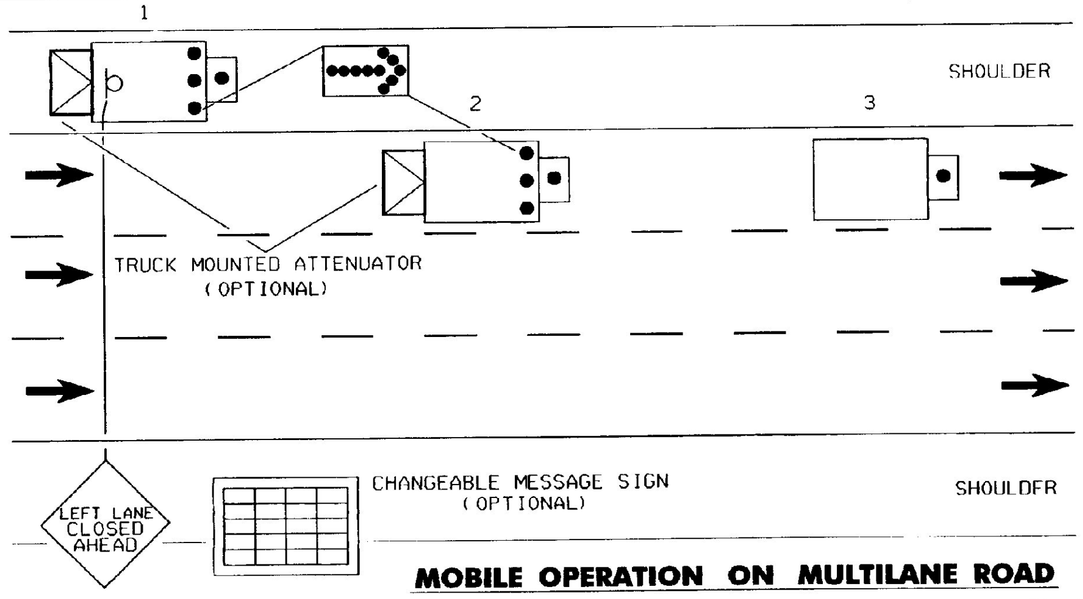

MOBILE OPERATION ON MULTILANE ROAD

NOTES:

1. VEHICLES USED FOR THESE OPERATIONS SHOULD BE MADE HIGHLY VISIBLE WITH APPROPRIATE EQUIPMENT, SUCH AS FLASHING LIGHTS, ROTATING BEACONS, FLAGS, SIGN, OR ARROW DISPLAYS.
2. PROTECTION VEHICLE #1 SHOULD BE EQUIPPED WITH AN ARROW DISPLAY. AN APPROPRIATE LANE CLOSURE SIGN SHOULD BE PLACED ON PROTECTION VEHICLE #1 SO AS NOT TO OBSCURE THE ARROW DISPLAY.
3. PROTECTION VEHICLE #2 SHOULD BE EQUIPPED WITH AN ARROW DISPLAY AND TRUCK - MOUNTED ATTENUATOR.
4. PROECTION VEHICLE #1 SHOULD TRAVEL AT A VARYING DISTANCE FROM THE WORK OPERATION SO AS TO PROVIDE ADEQUATE SIGHT DISTANCE FOR TRAFFIC APPROACHING FROM THE REAR.
5. WHEN ADEQUATE SHOULDER WIDTH IS NOT AVAILABLE, PROTECTION VEHICLE #1 SHOULD BE ELIMINATED.
6. ON HIGH - SPEED ROADWAYS, A THIRD PROTECTION VEHICLE SHOULD BE USED - VEHICLE #1 ON THE SHOULDER (IF POSSIBLE), VEHICLE #2 IN THE CLOSED LANE, AND VEHICLE #3 IN THE CLOSED LANE.
7. ARROW DISPLAYS SHALL BE AS A MINIMUM TYPE B, 60 INCHES BY 30 INCHES (FIGURE VI - 9, SECTION 6F - 3).
8. WORK SHOULD NORMALLY BE DONE DURING OFF - PEAK HOURS.

VC-805

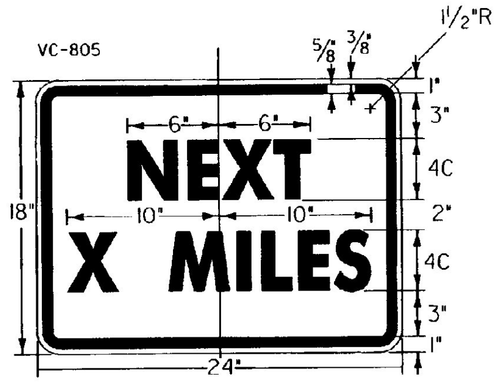

VC-802

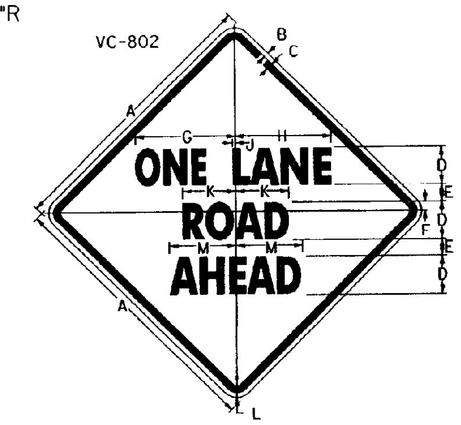

SIGN	DIMENSIONS (INCHES)											
	A	B	C	D	E	F	G	H	J	K	L	M
MIN.	36	5/8	7/8	5C	2 1/4	1 1/4	13 1/8	12 5/8	3/8	7	2 1/4	8 3/4
STD.	48	3/4	1 1/4	7C	3 1/8	1 3/4	18 1/2	17 3/4	1/2	9 9/16	3	13 3/8

VC-804

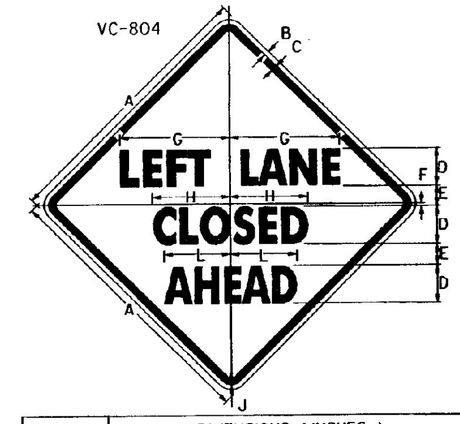

SIGN	DIMENSIONS (INCHES)										
	A	B	C	D	E	F	G	H	J	K	L
MIN.	36	5/8	1/8	5C	2 3/4	3/8	15 3/4	10 1/4	2 1/4	14 1/2	8 9/16
STD.	48	3/4	1 1/4	6C	3 3/8	1/2	19	12 5/8	3	17 7/16	10 7/8

VC-806

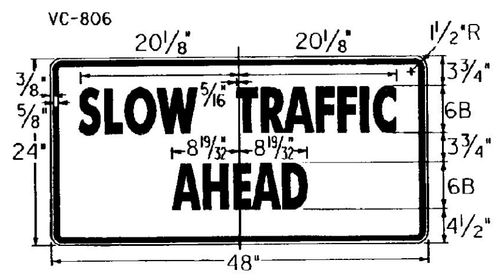

VC 801

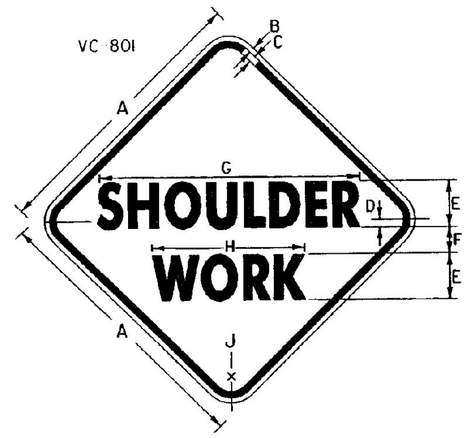

SIGN	DIMENSIONS (INCHES)								
	A	B	C	D	E	F	G	H	J
2 LANE	36	5/8	1/8	1	5-D	3 1/2	34 5/16	17 1/16	2 1/4
4 LANE	48	3/4	1 1/4	1	7-C	4	38 7/16	20 1/8	3

VC-803

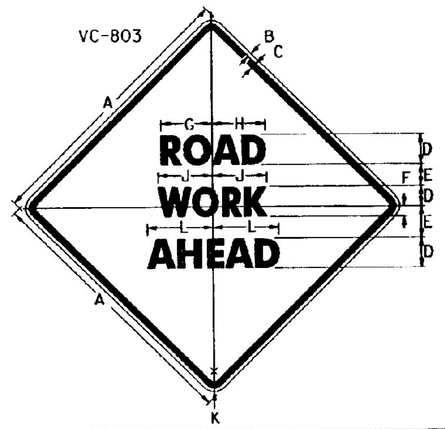

SIGN	DIMENSIONS (INCHES)										
	A	B	C	D	E	F	G	H	J	K	L
MIN.	30	1/2	3/4	4D	2 1/8	2 5/8	6 3/4	7	7 1/16	1 7/8	8 11/16
STD.	36	5/8	7/8	5D	3 1/2	3 1/4	8 3/8	8 7/8	9	2 1/4	10 7/8
SPECIAL	48	3/4	1 1/4	7D	4 3/4	4 1/2	11 11/16	12 1/16	12 5/8	3	15 1/2

NOTES:

1. OPTICALLY CENTER SYMBOLS WITHIN SECTIONS UNLESS OTHERWISE NOTED.
2. 'VC-9XX' IS THE SIGN CODE NUMBER.
3. MIRROR IMAGES ARE NOT SHOWN BUT CARRY THE SAME CODE NUMBER.
4. THESE SIGN ARE INTENTED FOR GROUND MOUNTING ONLY.
5. OTHER VARIATIONS OF THESE STANDARD DESIGNS ARE DEPICTED IN THE VT SIGN IDENTIFICATION MANUAL. WHEN THEY ARE USED THEY SHOULD BE DESIGNED USING THE DIMENSIONS AND DETAILS SHOWN HERE.

OTHER STDS. REQUIRED:

REVISIONS AND CORRECTIONS

JAN. 26, 1972 - DATE OF ORIGINAL ISSUE
FEB. 29, 1972 - REVISED PER DIRECTION OF THE FEDERAL HIGHWAY ADMINISTRATION
MAY 14, 1974 - REFLECTIVE MATERIAL CHANGE
JUN. 8, 1977 - REFLECTIVE MATERIAL NOTE CHANGE SIGNS REFERENCED TO NUMBERS IN M.U.T.C.D.
AUG. 10, 1977 - PERSON WORKING SIGN CHANGED TO SYMBOL
DEC. 9, 1981 - MINOR SIGN DIMENTION CHANGES.
FEB. 3, 1986 - UPDATED TO 1986 SPECIFICATIONS
AUG. 8, 1995 - UPDATED TO 1993 MUTCD - CHAPTER 6

APPROVED

Gordon D. MacAskill
DIRECTOR OF ENGINEERING

David A Ross
TRAFFIC AND SAFETY ENGINEER

APPROVED FOR THIS PROJECT AND/OR DESIGN IMPLEMENTATION. FHWA FINAL APPROVAL PENDING.

TRAFFIC CONTROL FOR TYPICAL MOVING MAINTENANCE OPERATIONS

/traf/std/stde10a.dgn : stde10a.i

VERMONT AGENCY OF TRANSPORTATION

STANDARD
E-10A

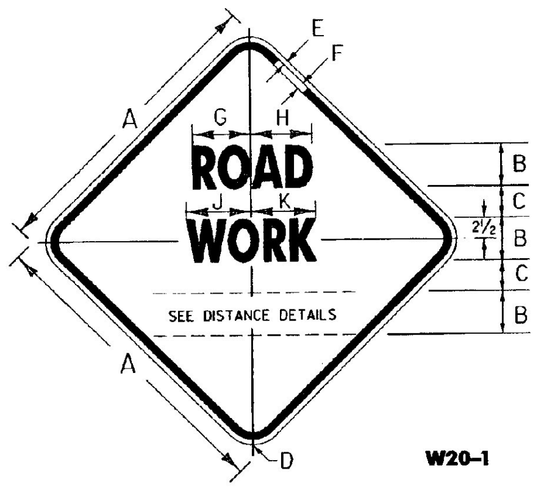

W20-1

DIMENSIONS (INCHES)										
	A	B	C	D	E	F	G	H	J	K
STD.	48	7C	4¾	3" R.	¾	1¼	9½	9¹³⁄₁₆	10½	10⁵⁄₁₆
URBAN	36	5C	3⅝	2¼R.	⅝	⅞	6⅞	7⅛	7½	7⁹⁄₁₆

DISTANCE DETAILS

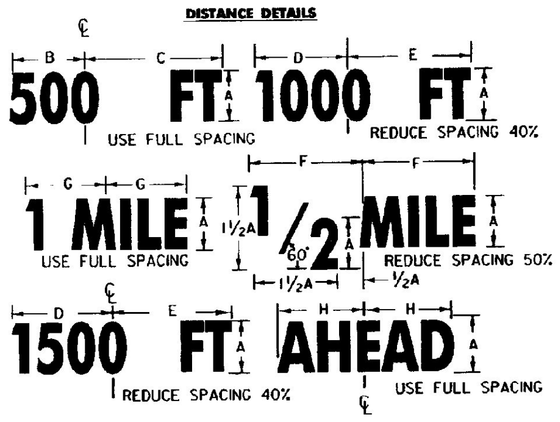

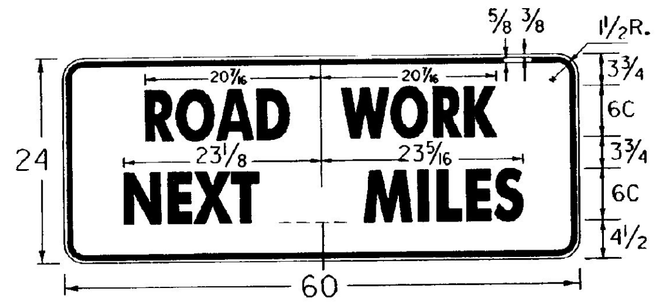

G20-1

THIS SIGN TO BE USED WHEN PROJECT LENGTH EXCEEDS 2 MILES OR AS REQUESTED BY THE RESIDENT ENGINEER. SHOW MILEAGE TO NEAREST ¼ MILE USING FRACTIONS, NOT DECIMALS. HAND LETTERING OF MILEAGE WILL NOT BE ALLOWED. (ALL DIMENSIONS SHOWN IN INCHES)

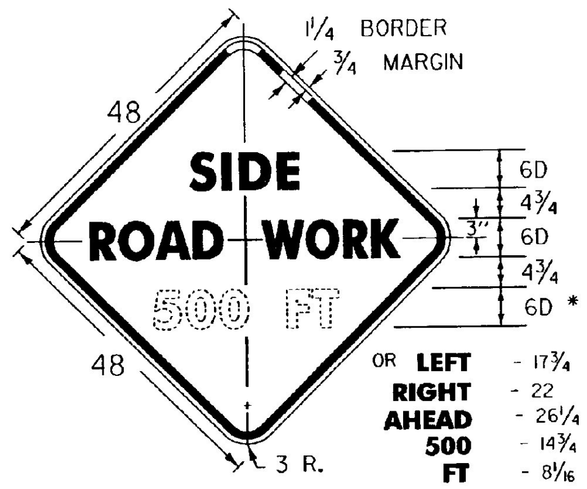

W20-1 * REDUCE SPACING 50%

DIMENSIONS (INCHES)								
	A	B	C	D	E	F	G	H
5D	10⅜	10⅜	10⅜	11⅝	11¼	11¼	9½	10⅞
6C	10⅜	10½	11¼	12	12½	9⅛	10½	
7C	12	12⅜	13⅛	14	14⅜	10⅝	12¼	
8D	16¼	17¼	17	18	18	14⅜	17⅜	

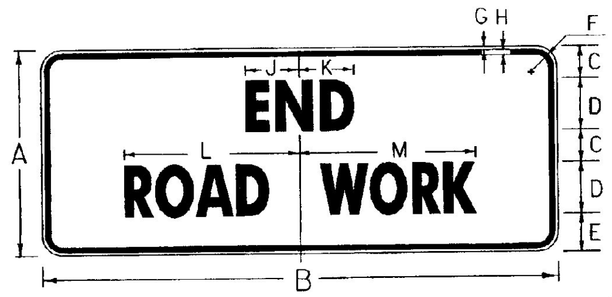

G20-2A

DIMENSIONS (INCHES)												
	A	B	C	D	E	F	G	H	J	K	L	M
STD.	24	60	3¾	6C	4½	1½R.	⅜	⅝	6¼	6⅜	20⅞	20⅞
URBAN	24	36	4¼	5B	4½	1½R.	½	¾	3¾	3⅛	14⅜	14⅜

(ALL DIMENSIONS SHOWN IN INCHES UNLESS OTHERWISE NOTED)

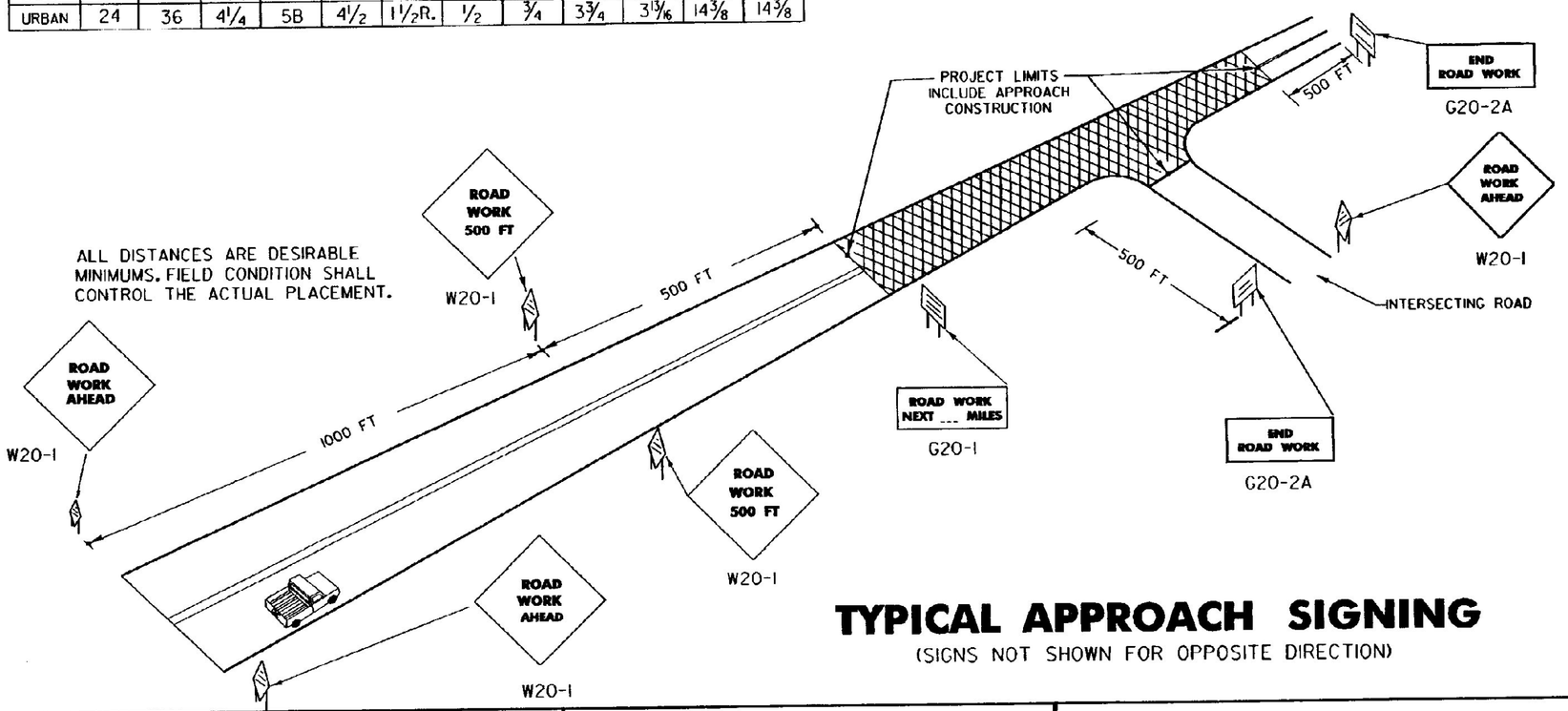

TYPICAL APPROACH SIGNING

(SIGNS NOT SHOWN FOR OPPOSITE DIRECTION)

NOTES

THE SIGNS SHOWN ON THIS SHEET ARE INTENDED FOR USE IN PROVIDING ADVANCE WARNING AND INFORMATION ON CONSTRUCTION PROJECTS OVER WHICH TRAFFIC WILL BE MAINTAINED. WHEN ADDITIONAL APPROACH SIGNS OR OTHER TYPES OF ADVANCE SIGNING OR CONTROL ARE NECESSARY, THE PLANS AND/OR THE SPECIFICATIONS FOR THAT PROJECT WILL GIVE THE DETAILS OF THE SIGNS AND DEVICES REQUIRED. FOR ON-PROJECT CONSTRUCTION SIGNS, REFER TO APPROPRIATE STANDARD SHEETS.

APPLICATION OF STANDARDS

SINCE IT IS NOT POSSIBLE TO PRESCRIBE DETAILED STANDARDS OF APPLICATION FOR ALL OF THE SITUATIONS THAT MAY CONCEIVABLY ARISE ON A CONSTRUCTION PROJECT, REFERENCE SHALL BE MADE TO THE ''MANUAL ON UNIFORM TRAFFIC CONTROL DEVICES'' FOR THE PRINCIPLES, PROCEDURES, AND STANDARDS THAT WILL BE REQUIRED IN CONNECTION WITH ADVANCED WARNING AND ON-PROJECT CONSTRUCTION SIGNS AND BARRICADES. THE SIGNS SHOWN IN E-101 AND E-102 REPRESENT A SAMPLE OF THOSE MORE COMMONLY USED.

LOCATION

THE SIGNS SHALL BE LOCATED AS DETAILED ON THIS SHEET OR AS OTHERWISE SHOWN ON THE PLANS. THEY SHALL APPEAR AT EACH END OF THE HIGHWAY UNDER CONSTRUCTION AND ON ALL INTERSECTING PUBLIC HIGHWAYS. THE EXACT PLACEMENT OF ANY SIGN WILL DEPEND UPON THE ALIGNMENT INTENDED TO INDICATE THE SEQUENCE TO BE FOLLOWED, AND THE APPROXIMATE SPACING TO BE OBSERVED. THE ENGINEER SHALL DETERMINE THE EXACT LOCATIONS.

DESIGN

THE DESIGN OF THE SIGNS SHALL CONFORM WITH THE DETAILS SHOWN ON THIS SHEET AND WITH THE STANDARDS PRESCRIBED IN THE 'MANUAL ON UNIFORM TRAFFIC CONTROL DEVICES'.

MATERIALS

THE SIGN BASE MATERIAL USED FOR THE SIGNS ON THIS SHEET MAY BE ANY OF THE FOLLOWING, WITH MINIMUM THICKNESS AS NOTED.

FLAT SHEET ALUMINUM	0.125 INCHES
HIGH DENSITY OVERLAYED PLYWOOD	1/2, 5/8, OR 3/4 INCHES
GALVANIZED SHEET STEEL	12 GAGE

REFLECTORIZATION

ALL REFLECTORIZED MATERIAL SHALL CONSIST OF TYPE IIB OR TYPE III SHEETING.

COLORS

THE COLORS SHALL CONFORM WITH THE STANDARD COLORS ADOPTED BY THE AMERICAN ASSOCIATION OF STATE HIGHWAY AND TRANSPORTATION OFFICIALS AND APPROVED BY THE U.S. DEEPARTMENT OF TRANSPORTATION, FEDERAL HIGHWAY ADMINISTRATION. COLORS SHOWN ON THIS SHEET CONSIST OF BLACK TEXT AND BORDER ON A REFLECTORIZED ORANGE BACKGROUND.

INSTALLATION

THE SIGNS SHALL BE ERECTED BEFORE THE START OF ANY WORK AND SHALL BE COVERED UNTIL WORK COMMENCES, DURING PERIODS OF INACTIVITY, OR UPON COMPLETION OF THE WORK. SIGNS MAY BE REMOVED UPON COMPLETION OF THE WORK AT THE DISCRETION OF THE ENGINEER. EACH SIGN SHALL BE ERECTED IN A NEAT AND WORKMANLIKE MANNER ON POSTS SET SECURELY IN THE GROUND. THE BOTTOM OF A SIGN SHALL BE AT LEAST 7 FEET ABOVE THE EDGE OF PAVEMENT, AND THE NEAREST EDGE OF A SIGN SHALL BE AT LEAST 6 FEET OUTSIDE THE SHOULDER POINT, 4 FEET OUTSIDE GUARD RAIL, OR 2 FEET OUTSIDE CURBING, OR SIDEWALK. THE INSTALLATION OF SIGNS SHALL BE SUBJECT TO APPROVAL OF THE ENGINEER, IN URBAN AREAS, THE BOTTOM OF THE SIGN SHALL BE AT LEAST 7 FEET ABOVE THE SIDEWALK.

MAINTENANCE

SIGNS SHALL BE MAINTAINED IN A CLEAN AND LEGIBLE CONDITION SATISFACTORY TO THE ENGINEER. THEY SHALL BE COMPLETELY VISIBLE TO APPROACHING TRAFFIC AT ALL TIMES. THEY SHALL BE KEPT PLUMB AND LEVEL, AND ALWAYS PRESENT A NEAT APPEARANCE. DAMAGED, DEFACED, OR DIRTY SIGNS SHALL BE REPAIRED, CLEANED OR REPLACED AS ORDERED BY THE ENGINEER.

NOTES CONT.

GENERAL

THE COST OF FURNISHING, INSTALLING, MAINTAINING AND REMOVING ALL CONSTRUCTION APPROACH SIGNS WILL BE CONSIDERED SUBSIDIARY WORK PERTAINING TO THE PROJECT AS A WHOLE AND SHALL BE INCLUDED IN THE CONTRACT UNIT PRICE BID FOR VARIOUS ITEMS INVOLVED IN THE CONTRACT. DURING ALL PHASES OF CONSTRUCTION THE REQUIREMENTS SET FORTH IN THE ''MANUAL ON UNIFORM TRAFFIC CONTROL DEVICES'' SHALL BE MET. WHEN THE PROJECT IS CLOSED DOWN FOR TEMPORARY PERIODS THE SIGNS SHALL BE COVERED IN A WORKMANLIKE MANNER.

SIGN COVERS

SIGN COVERS SHALL CONSIST OF A PANEL PAINTED FLAT BLACK. THE SAME SIZE AS THE SIGN IT COVERS. THE PANEL SHALL BE OF WOOD, PLYWOOD, HARDBOARD OR ANY MATERIAL SATISFACTORY TO THE ENGINEER. NO MATERIAL WILL BE APPROVED THAT WILL DETERIORATE BY EXPOSURE TO THE WEATHER DURING THE PROJECT. MOUNTING OF THE PANEL SHALL BE DONE IN SUCH A WAY AS NOT TO DAMAGE THE SIGN FACE MATERIAL.

CONTRACTORS SHALL COORDINATE THEIR SIGNING ACTIVITIES WITH OTHER CONTRACTORS WITHIN THE PROJECT LIMITS, AS DIRECTED BY THE REGIONAL CONSTRUCTION ENGINEER.

SIGN POSTS

WHERE CONSTRUCTION SIGN INSTALLATIONS ARE NOT PROTECTED BY GUARD RAIL OR OTHER APPROVED TRAFFIC BARRIERS, THE POSTS ON WHICH THE SIGNS ARE MOUNTED SHALL BE YIELDING METAL POSTS AS DESIGNATED IN THE E SERIES OF STANDARD DRAWINGS OR YIELDING WOODEN POSTS IN ACCORDANCE WITH THE FOLLOWING REQUIREMENTS:

WOODEN POSTS ARE ACCEPTABLE FOR USE WITH CONSTRUCTION SIGNS. THESE POSTS SHALL HAVE A UNIFORM CROSS-SECTION AND SHALL BE MADE FROM GRADE 2, AIR-DRIED SOUTHERN YELLOW PINE OR ANOTHER EQUIVELANT SOFTWOOD. AN ACCEPTABLE EQUIVELANT SOFTWOOD SHALL HAVE AN EXTREME FIBER IN BENDING "Fb" DESIGN VALUE NOT TO EXCEED 1400 psi AND HORIZONTAL SHEAR "Fv" DESIGN VALUE NOT TO EXCEED 90 psi SPECIFICATION; "DESIGN VALUES FOR WOOD CONSTRUCTION" AND RELATED SUPPLEMENT, DATED 1986.

AS ESTABLISHED BY THE NATIONAL FOREST PRODUCTS ASSOCIATION IN THEIR NATIONAL DESIGN

THE FOLLOWING ARE CONSIDERED TO BE ACCEPTABLE WOODEN POSTS:

1. 4'' X 4'' (ACTUAL DIMENSIONS ARE 3.5'' X 3.5'')
   - A) ACCEPTABLE FOR SINGLE OR DUAL POSTS INSTALLATION WITH NO MODIFICATIONS.
   - B) ACCEPTABLE FOR THREE POSTS (OR MORE) INSTALLATION ONLY WHEN THERE ARE NO MORE THAN TWO POSTS IN A 7 FOOT PATH.
2. 4'' X 6'' (ACTUAL DIMENSIONS ARE 3.5'' X 5.5'')
   - A) ACCEPTABLE FOR SINGLE POST INSTALLATIONS ONLY WHEN MODIFIED BY DRILLING TWO 1 1/2'' DIAMETER HOLES, ONE AT 4'' AND THE OTHER 18'' ABOVE THE GROUND LINE AND PERPINDICULAR TO THE ROADWAY CENTERLINE.
   - B) ACCEPTABLE FOR MULTIPLE POSTS (TWO OR MORE) INSTALLATIONS ONLY WHEN MODIFIED AS ABOVE AND THE MINIMUM SPACING BETWEEN POSTS IS 7 FEET.
3. 6'' X 6'' (ACTUAL DIMENSIONS ARE 5.5'' X 5.5'')
   - A) ACCEPTABLE FOR SINGLE POST INSTALLATIONS ONLY WHEN MODIFIED BY DRILLING TWO 2'' DIAMETER HOLES, ONE AT 4'' AND THE OTHER AT 18'' ABOVE THE GROUND LINE AND PERPINDICULAR TO ROADWAY CENTERLINE.
   - B) ACCEPTABLE FOR MULTIPLE POST INSTALLATION ONLY WHEN MODIFIED AS ABOVE AND THE MINIMUM SPACING BETWEFN POSTS IS 7 FEET.
4. 6'' X 8'' (ACTUAL DIMENSIONS ARE 5.5'' X 7.5'')
   - A) ACCEPTABLE FOR SINGLE POST INSTALLATIONS ONLY WHEN MODIFIED BY DRILLING TWO 3'' DIAMETER HOLES, ONE AT 4'' AND THE OTHER AT 18'' ABOVE THE GROUND LINE AND PERPINDICULAR TO THE ROADWAY CENTERLINE.
   - B) ACCEPTABLE FOR MULTIPLE POST INSTALLATIONS ONLY WHEN MODIFIED AS ABOVE AND THE MINIMUM SPACING BETWEEN POSTS IS 7 FEET.

ADDITIONAL DESIGN CRITERIA:

THE LONGER DIMENSION OF THE POST(S), SUCH AS THE 6'' DIMENSION OF THE 4'' X 6'' POST, SHALL BE PLACED PARALLEL TO THE ROADWAY CENTERLINE.
ALL WOODEN POSTS SHALL HAVE AN EMBEDMENT DEPTH OF 4 FEET.
NO CROSS-BRACING OR BACK-BRACING TO KEEP THE POSTS PLUMB WILL BE ALLOWED.
CONCRETE FOUNDATIONS COLLARS OR SOIL BEARING PLATES ARE NOT PERMITTED.
CONSTRUCTIONS SIGNS SHALL BE PLACED ON TWO OR MORE POSTS WHEN ANY OF THE FOLLOWING CONDITIONS GOVERN:

- A) THE SIGN WIDTH (HORIZONTAL DIMENSIONS FOR DIAMOND SHAPED SIGNS) EXCEEDS 3 1/2 FEET.
- B) THE EXPOSED SIGN AREA OF ANY SINGLE SIGN OR ASSEMBLY EXCEEDS 12 ½ SQ. FEET.
- C) THE Sv OF A SINGLE POST IS EXCEEDED. (SEE THE POST SELECTION CHART BELOW).

WOOD POST SELECTION CHART		
SIGN AREA (FT^2) X HEIGHT (FT) ≤ Sv (SELECTION VALUE)		
POST SIZE	Sv	DESIGN CRITERIA:
4'' X 4''	64	WIND SPEED = 60 MPH (10-YEAR
4'' X 6''	147	MEAN OCCURENCE INTERVAL)
6'' X 6''	216	WIND PRESSURE = 13 psf
6'' X 8''	389	ALLOWABLE BENDING STRESS b

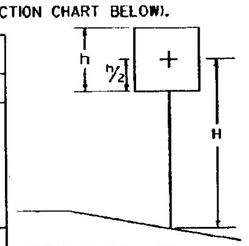

POST SELECTION CHART DETAIL

OTHER STDS. REQUIRED:

REVISIONS AND CORRECTIONS

MAY 26, 1989 - DATE OF ORIGINAL ISSUE

OCT 21, 1992 - REVISED WOOD POST REQUIREMENTS, ADDED SIGN DETAILS, & REVISED TITLE BLOCK

AUG 08, 1995 - MINOR NOTE REVISIONS

APPROVED

Gordon S. MacCutcheon
DIRECTOR OF ENGINEERING

David A. Ross
TRAFFIC AND SAFETY ENGINEER

CONSTRUCTION APPROACH SIGNS

/traf/std/stde100.dgn : stde100.i

VERMONT AGENCY OF TRANSPORTATION

STANDARD
E-100

APPROVED FOR THIS PROJECT AND/OR DESIGN IMPLEMENTATION. FHWA FINAL APPROVAL PENDING.

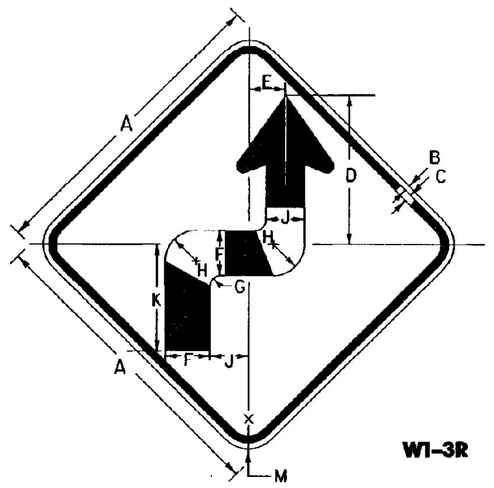

W1-3R

SIGN	DIMENSIONS (INCHES)											
	A	B	C	D	E	F	G	H	J	K	L	M
STD. & MIN.	36	5/8	7/8	17 7/16	4 7/32	5 1/4	11 1/4	3 5/8	4 1/2	12 15/32	1 21/32	2 1/4
SPECIAL	48	3/4	1 1/4	23 3/16	5 5/8	7	15 5/8	4 7/8	6	16 5/8	2 3/16	3

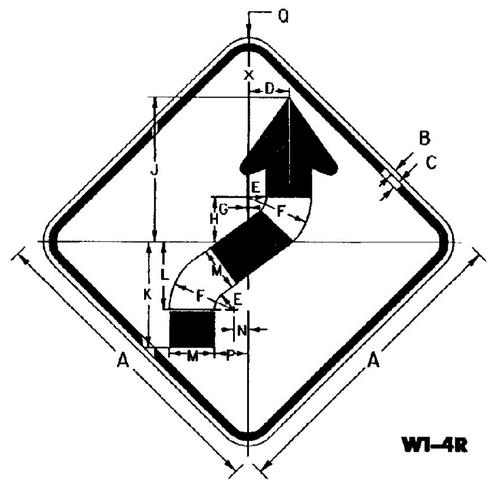

W1-4R

SIGN	DIMENSIONS (INCHES)														
	A	B	C	D	E	F	G	H	J	K	L	M	N	P	Q
STD. & MIN.	36	5/8	7/8	4 23/32	2 1/4	7 1/2	5/32	5 1/4	16 7/8	12 3/8	7 7/8	5 1/4	1 11/16	3 15/16	2 1/4
SPECIAL	48	3/4	1 1/4	6 5/16	3	10	3/16	7	22 1/2	16 1/2	10 1/2	7	2 1/4	5 1/4	3

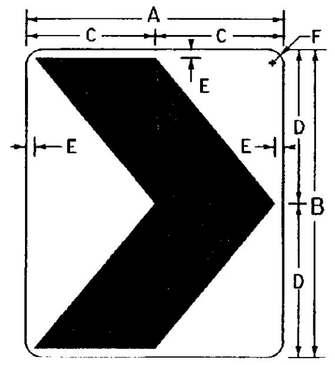

W1-8

SIGN	DIMENSIONS(INCHES)					
	A	B	C	D	E	F
STD.	18	24	9	12	3/4	1 1/2
SPECIAL	24	30	12	15	7/8	1 1/2
EXPWY.	30	36	15	18	1	1 1/8
FRWY.	36	48	18	24	1 1/8	2 1/4

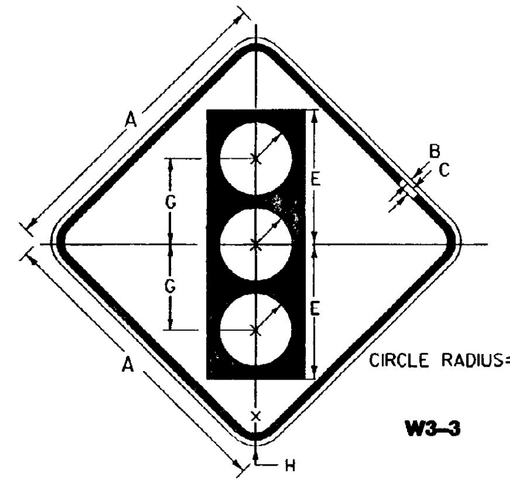

W3-3

CIRCLE RADIUS=F

SIGN	DIMENSIONS (INCHES)							
	A	B	C	D	E	F	G	H
STD. & MIN.	36	5/8	7/8	5 3/4	15 3/4	4 1/4	10	2 1/4
SPECIAL	48	3/4	1 1/4	7 1/2	20	5	12 1/2	3

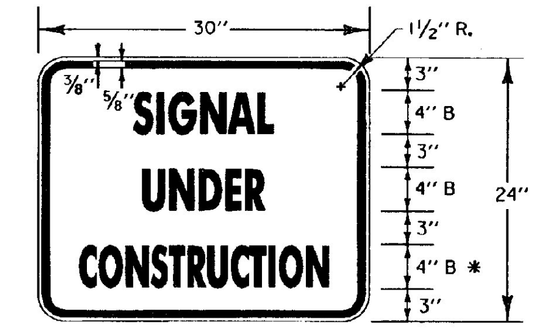

* REDUCE SPACING 50%

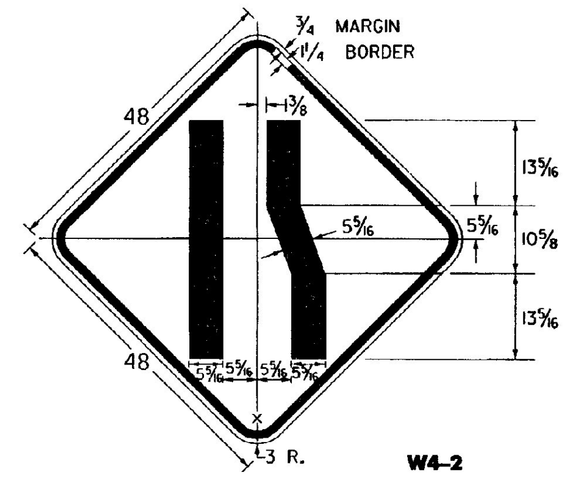

W4-2

COLORS

SYMBOL & LEGEND - BLACK (NON-REFL)
BACKGROUND - ORANGE (REFL)

TOP CIRCLE RED (REFL)
MIDDLE CIRCLE YELLOW (REFL)
BOTTOM CIRCLE GREEN (REFL)

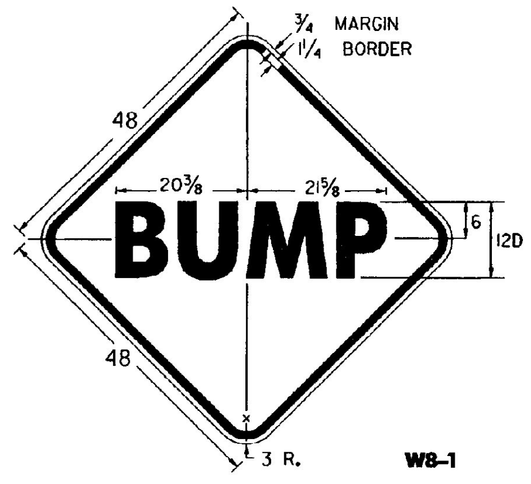

W8-1

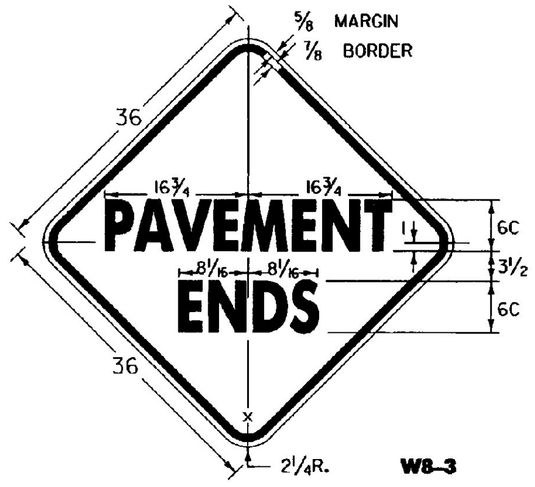

W8-3

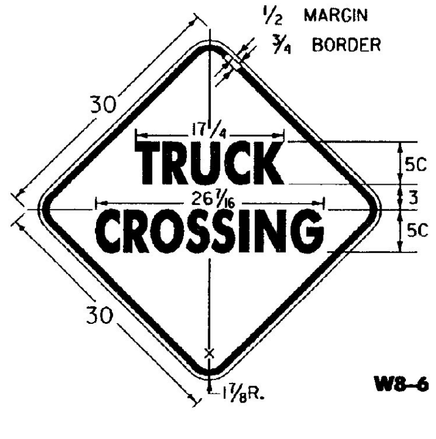

W8-6

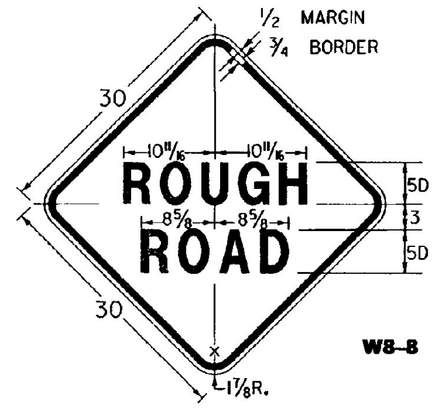

W8-8

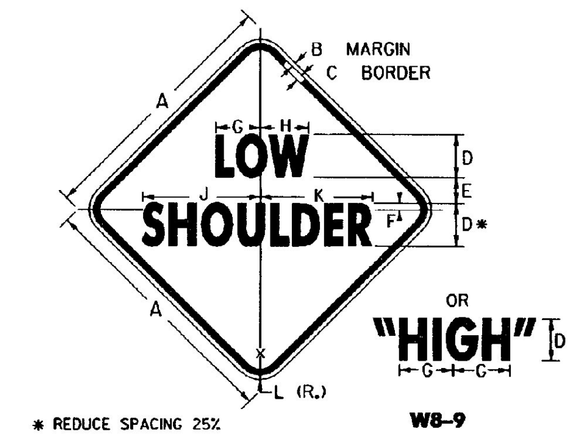

* REDUCE SPACING 25%

W8-9

SIGN	DIMENSIONS(INCHES)										
	A	B	C	D	E	F	G	H	J	K	L
STD.	30	1/2	3/4	5C	3	3/4	5 3/8	5 5/8	13 1/4	13 1/8	1 1/8
FWY.	48	3/4	1 1/4	8C	5	1 1/4	8 1/4	9	21 1/8	20 1/8	3

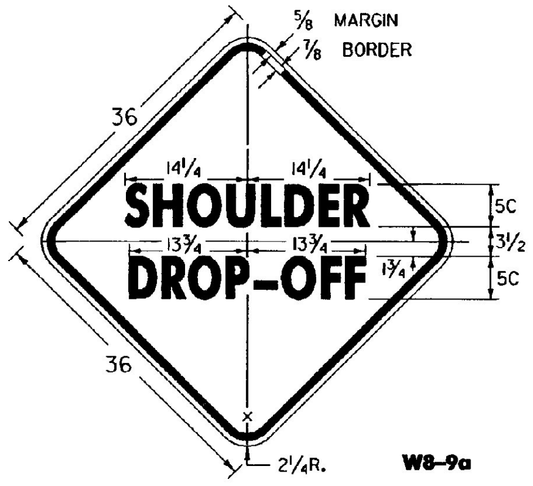

W8-9a

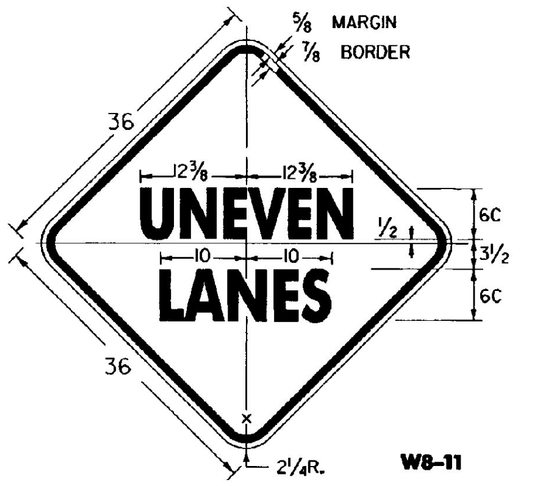

W8-11

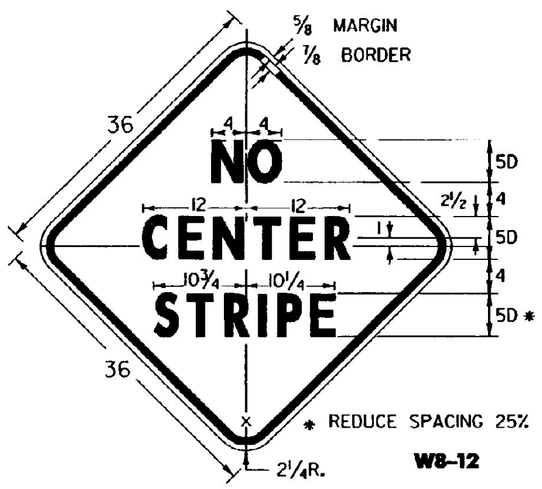

* REDUCE SPACING 25%

W8-12

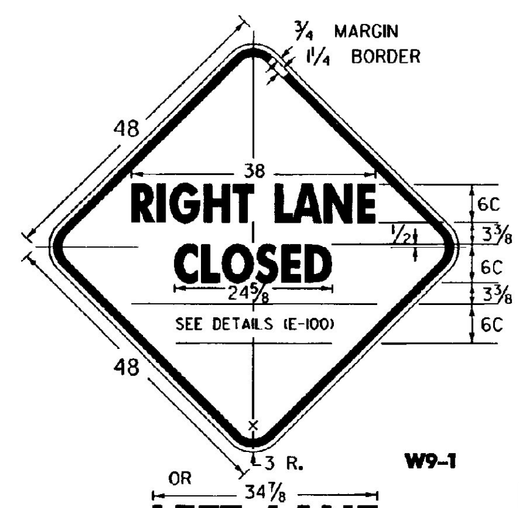

W9-1

OR

(ALL DIMENSIONS SHOWN IN INCHES)

NOTES

SEE STANDARD SHEET E-100 FOR NOTES AND TEXT DETAILS

COLORS FOR SIGNS SHOWN ON THIS SHEET SHALL BE BLACK TEXT, BORDER AND SYMBOLS ON A REFLECTORIZED TYPE IIIB OR TYPE III ORANGE BACKGROUND, UNLESS OTHERWISE NOTED.

SIGNS USED ONLY FOR DAYTIME MAINTENANCE OPERATIONS DO NOT NEED TO BE REFLECTORIZED. HOWEVER, THESE SIGNS SHALL BE LABELED "DAYTIME USE ONLY" ON THE BACK OF THE SIGN PANEL WITH 3" SERIES C LETTERS.

OTHER STDS. REQUIRED: E-100

REVISIONS AND CORRECTIONS

OCT. 30, 1987 - DATE OF ORIGINAL ISSUE
OCT. 21, 1992 - ADDED ADDITIONAL SIGN DIMENSIONS, REVISED CHEVRON BACKROUND TO ORANGE, & REVISED TITLE BLOCK
AUG. 08, 1995 - ADDED AND DELETED VARIOUS SIGN DETAILS

APPROVED FOR THIS PROJECT AND/OR DESIGN IMPLEMENTATION. FHWA FINAL APPROVAL PENDING.

APPROVED

Gordon D. MacArthur
DIRECTOR OF ENGINEERING

David A. Roar
TRAFFIC AND SAFETY ENGINEER

CONSTRUCTION SIGN DETAILS

/traf/std/stdel01.dgn : stdel01.i

VERMONT AGENCY OF TRANSPORTATION

STANDARD
E-101

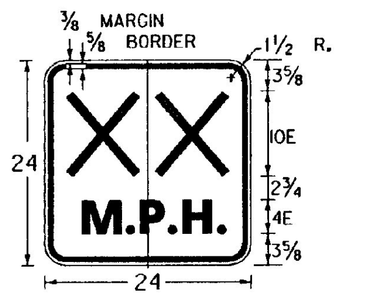

"XX" DENOTES ADVISORY SPEED AS SHOWN ON THE PLANS

W13-1

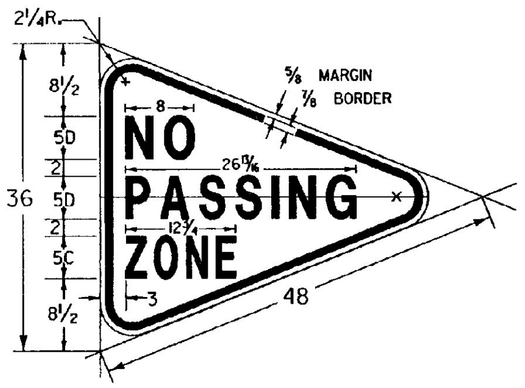

W14-3

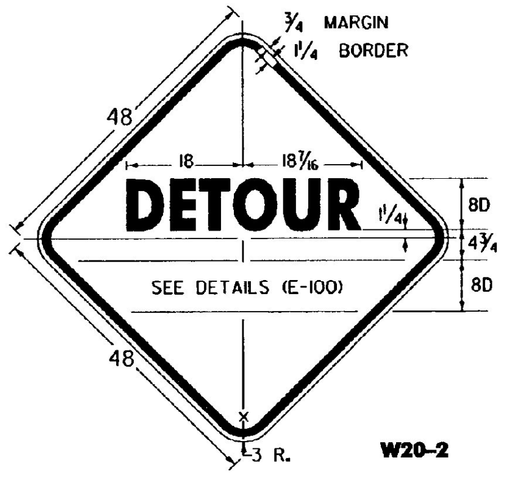

W20-2

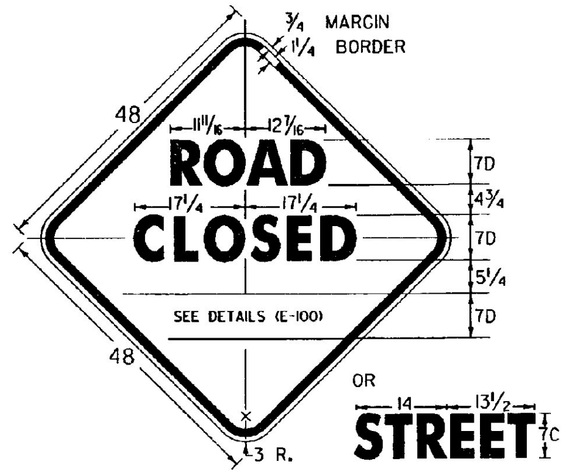

W20-3

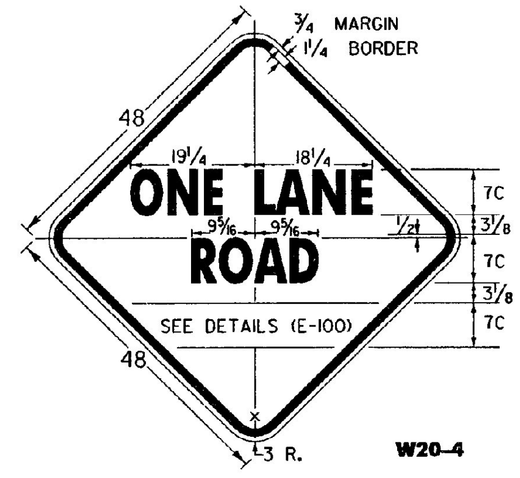

W20-4

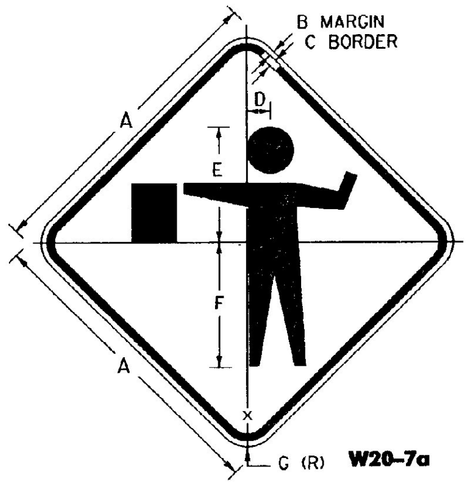

W20-7a

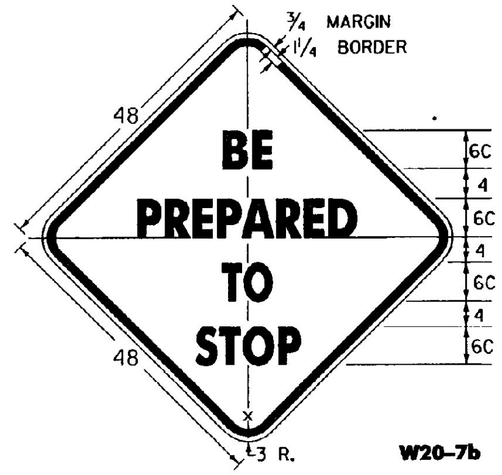

W20-7b

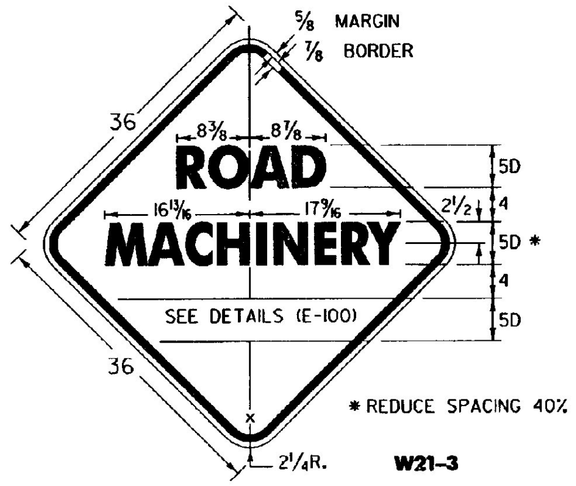

* REDUCE SPACING 40%

W21-3

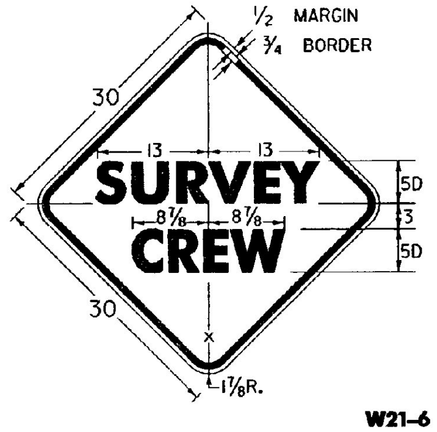

W21-6

ORANGE REFLECTORIZED DIAMOND WITH BLACK TEXT AND BORDER

RED REFLECTORIZED OCTAGON WITH WHITE REFLECTORIZED TEXT

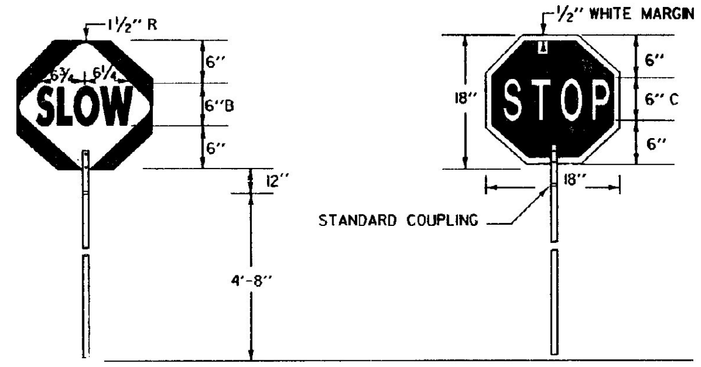

SIGN DETAIL

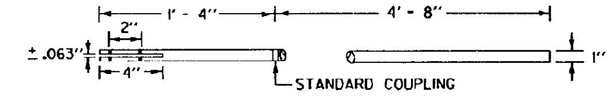

STAFF DETAIL

MATERIALS
THE SIGN MATERIALS SHALL BE 0.063" ALUMINUM WITH COLORS AS INDICATED ON DETAILS.
THE STAFF SHALL BE 3/4" TO 1 1/4" DIAMETER RIGID ALUMINUM CONDUIT/TUBING WITH A WALL THICKNESS OF 0.125", OR 1" TO 1 1/2" DIAMETER RIGID PVC CONDUIT/TUBING WITH 0.125" WALL THICKNESS

MOUNTING
THE STAFF SHALL BE MOUNTED WITH EITHER TWO 1/4" DIAMETER ALUMINUM BOLTS OR TWO 1/4" DIAMETER ALUMINUM RIVETS.

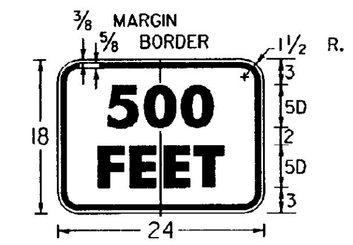

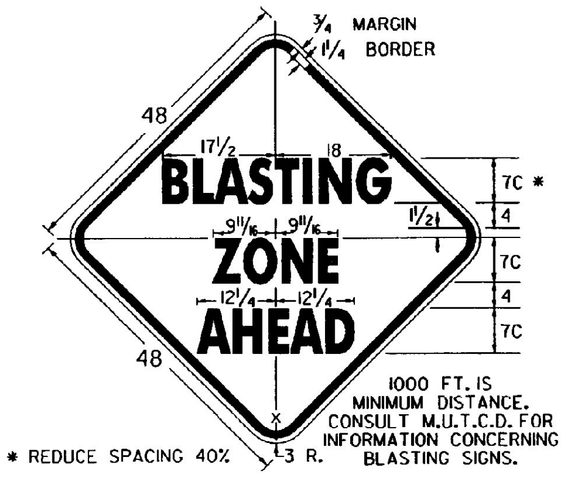

* REDUCE SPACING 40%

1000 FT. IS MINIMUM DISTANCE. CONSULT M.U.T.C.D. FOR INFORMATION CONCERNING BLASTING SIGNS.

W22-1

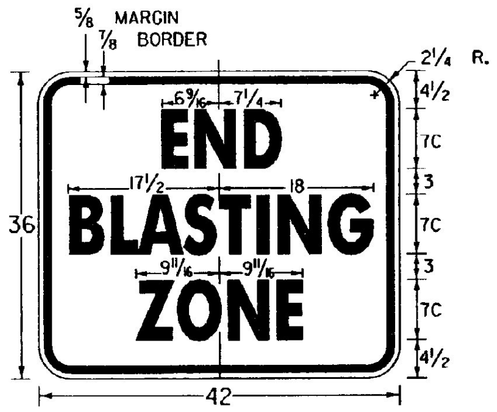

W22-3

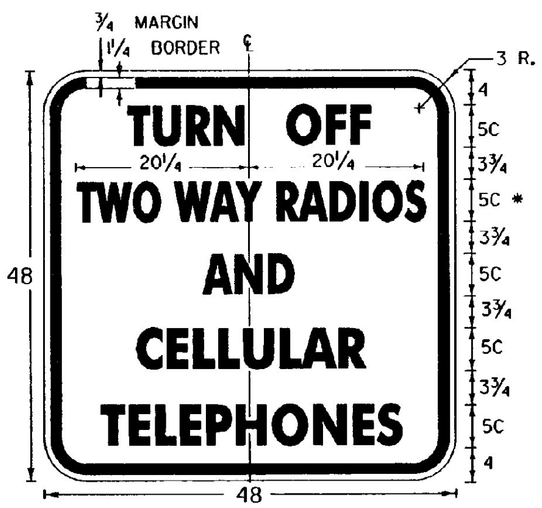

* REDUCE SPACING 50%

VW22-1

SIGN PADDLE FOR FLAGPERSON

NOTES

SEE STANDARD SHEET E-100 FOR NOTES AND TEXT DETAILS

COLORS FOR SIGNS SHOWN ON THIS SHEET SHALL BE BLACK TEXT, BORDER AND SYMBOLS SHALL BE ON A REFLECTORIZED ORANGE BACKGROUND OF TYPE IIB OR TYPE III REFLECTIVE SHEETING. UNLESS OTHERWISE NOTED. THE EXCEPTION IS THE PADDLE SIGN.

SIGN DETAILS INDICATE THE APPROPRIATE COLOR.

SIGNS USED ONLY FOR DAYTIME MAINTENANCE OPERATIONS DO NOT NEED TO BE REFLECTORIZED. HOWEVER, THESE SIGNS SHALL BE LABELED "DAYTIME USE ONLY" ON THE BACK OF THE SIGN PANEL WITH 3" SERIES C LETTERS.

SIGN	DIMENSIONS(INCHES)						
	A	B	C	D	E	F	G
STD.	36	5/8	1/8	2 3/4	13 1/2	14 5/8	2 1/4
FWY.	48	3/4	1 1/4	3 3/4	18	19 1/2	3

(ALL DIMENSIONS SHOWN IN INCHES)

OTHER STDS. REQUIRED: E-100

REVISIONS AND CORRECTIONS

OCT. 30, 1987 - DATE OF ORIGINAL ISSUE
JAN. 23, 1989 - DELETE MOTORCYCLE SYMBOL SIGN AND SPEED SIGN. ADDED TWO SIGNS
OCT. 21, 1992 - ADDED A SIGN, REVISED A SIGN DIMENSION & TYPE ERROR & REVISED TITLE BLOCK
AUG. 08, 1995 - ADDED FLAGGER GRID

APPROVED

Gordon S. MacAuley
DIRECTOR OF ENGINEERING

David A. Ross
TRAFFIC AND SAFETY ENGINEER

APPROVED FOR THIS PROJECT AND/OR DESIGN IMPLEMENTATION. FHWA FINAL APPROVAL PENDING.

CONSTRUCTION SIGN DETAILS

/traf/std/stdel02.dgn : stdel02.i

VERMONT AGENCY OF TRANSPORTATION

STANDARD
E-102

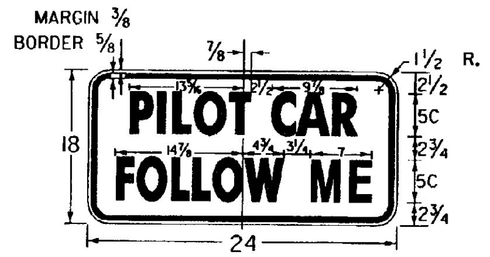

G20-4

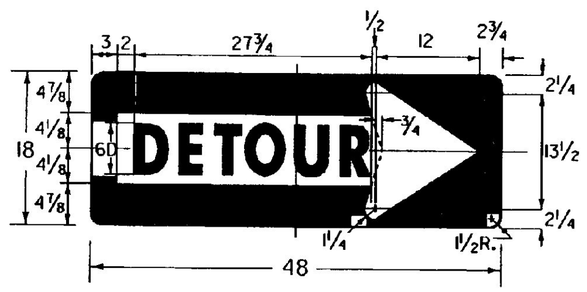

M4-10(R)

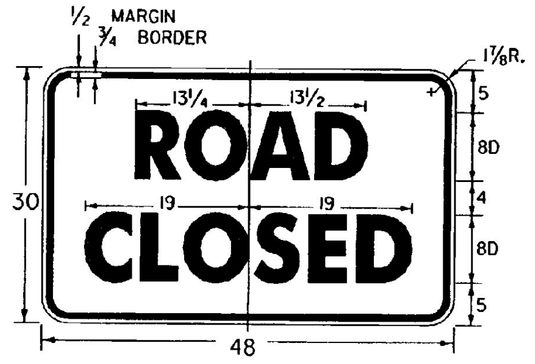

R11-2

COLORS:
BLACK TEXT AND BORDER
WHITE REFLECTORIZED BACKGROUND

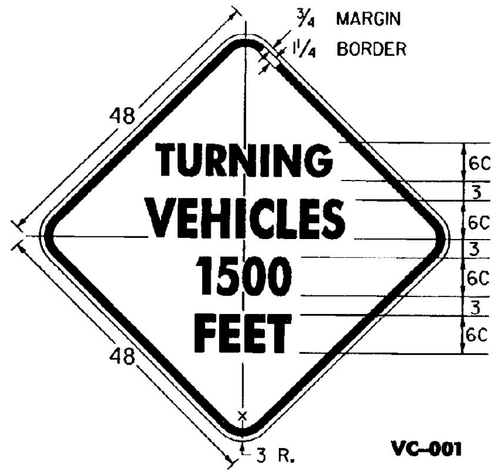

VC-001

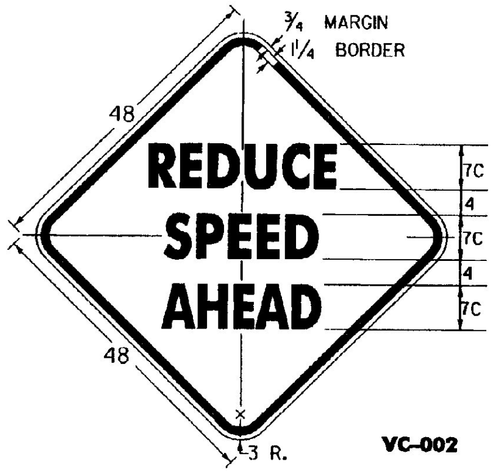

VC-002

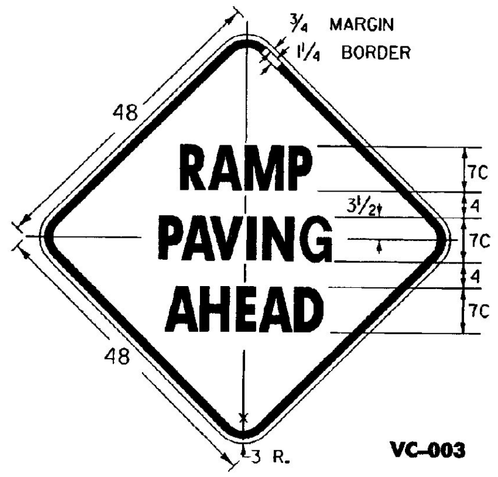

VC-003

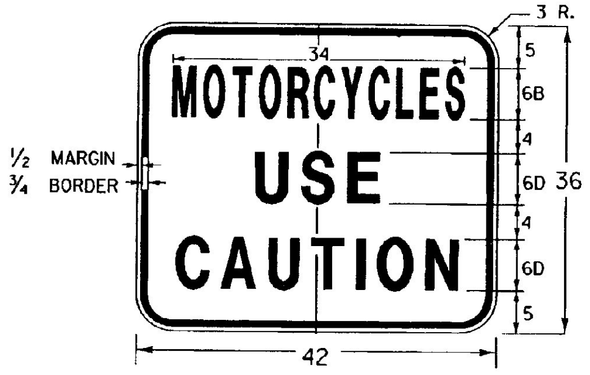

VC-004

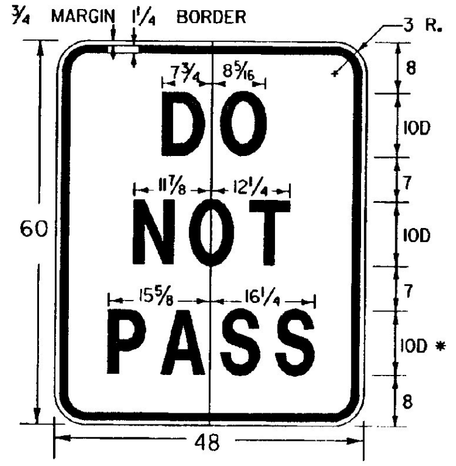

VC-005

* REDUCE SPACING BY 40%

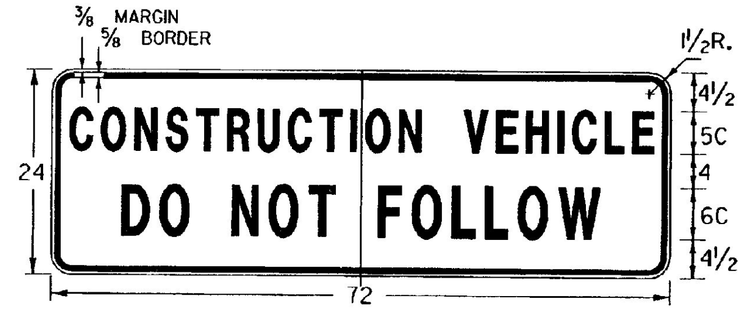

VC-007

IT IS SUGGESTED THAT THIS SIGN BE DESIGNED TO FOLD, (DOWN OR ACROSS), OR BE COVERED, OR BE REMOVED WHEN NOT IN USE. THE SIGN SHOULD ALSO BE MOUNTED AS TO NOT INTERFERE WITH THE VISIBILITY OF DIRECTIONAL OR TAIL LIGHTS AS REQUIRED BY LAW.

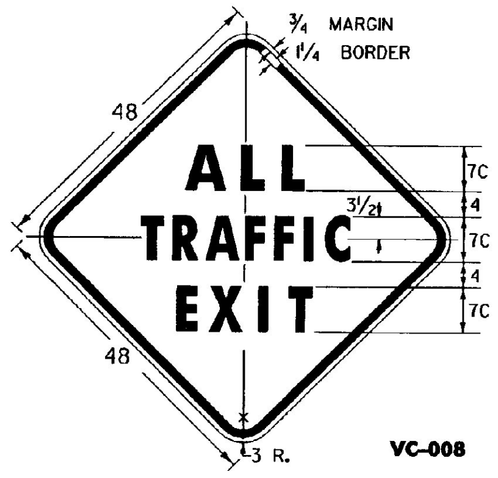

VC-008

VR-118

COLORS: BLACK BORDER & TEXT
WHITE (REFL.) BACKGROUND

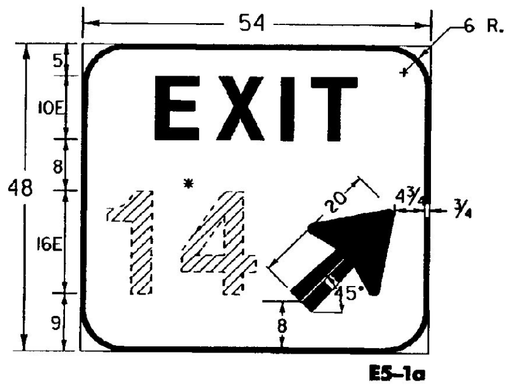

E5-1a

* EXIT NUMBER AS PER PLANS OPTICALLY SPACED

COLORS:
BACKGROUND - GREEN (REFL.)
BORDER, ARROW AND LEGEND - WHITE (REFL.)

NOTES

SEE STANDARD SHEET E-100 FOR NOTES AND TEXT DETAILS

COLORS FOR SIGNS SHOWN ON THIS SHEET SHALL BE BLACK TEXT, BORDER AND SYMBOLS SHALL BE ON A REFLECTORIZED ORANGE BACKGROUND OF TYPE IIB OR TYPE III REFLECTIVE SHEETING, UNLESS OTHERWISE NOTED.

SIGN DETAILS INDICATE THE APPROPRIATE COLOR.

SIGNS USED ONLY FOR DAYTIME MAINTENANCE OPERATIONS DO NOT NEED TO BE REFLECTORIZED, HOWEVER, THESE SIGNS SHALL BE LABELED "DAYTIME USE ONLY" ON THE BACK OF THE SIGN PANEL WITH 3" SERIES C LETTERS.

(ALL DIMENSIONS SHOWN IN INCHES)

OTHER STDS. REQUIRED: E-100

REVISIONS AND CORRECTIONS

AUG 08, 1995 - DATE OF ORIGINAL ISSUE

APPROVED FOR THIS PROJECT AND/OR DESIGN IMPLEMENTATION. FHWA FINAL APPROVAL PENDING.

APPROVED

Gordon S. MacAskill
DIRECTOR OF ENGINEERING

David A. Ross
TRAFFIC AND SAFETY ENGINEER

CONSTRUCTION SIGN DETAILS

/traf/std/stdel02.dgn : stdel02A.i

VERMONT AGENCY OF TRANSPORTATION

STANDARD
E-102A

TRAVEL LANE REQUIREMENTS

BARRIER SHALL BE PLACED AS CLOSE AS POSSIBLE TO THE CENTERLINE TO ALLOW THE TRAFFIC TO USE THE NORMAL LANE WIDTH.

EDGELINES SHALL BE REMOVED AND NEW TEMPORARY TAPE EDGELINES APPLIED. THE DRIVER'S LEFT EDGELINE SHALL BE A MINIMUM OF ONE FOOT. (TWO FEET IS DESIRABLE) FROM BARRIER. TRAVEL LANE SHALL BE 12 FEET WIDE.

THE TEMPORARY TAPE PAVEMENT MARKINGS SHALL BE OF A TYPE WHICH CAN BE COMPLETELY REMOVED AFTER THE PROJECT IS COMPLETED WITHOUT SCARRING OR MARKING THE PAVEMENT SURFACE. PAYMENT FOR THE TAPE MARKINGS SHALL BE UNDER THE APPROPRIATE ITEM NUMBERS.

PAVEMENT MARKING REMOVALS SHALL BE PAID UNDER THE APPROPRIATE ITEM NUMBER. TEMPORARY TAPE REMOVAL IS NOT PAID UNDER THE REMOVAL ITEM. IT IS SUBSIDIARY TO THE TAPE ITEM.

THE RAISED PAVEMENT MARKERS (RPM'S) SHALL BE OF A TYPE WHICH CAN BE EASILY REMOVED AND THEY SHALL BE PLACED TO THE OUTSIDE OF THE TEMPORARY TAPE PAVEMENT MARKINGS. THE RPM'S SHALL BE SPACED AT 20 FT. THE RPM'S ARE TO BE PAID UNDER THE ITEM TEMPORARY RAISED PAVEMENT MARKINGS. IF RPM'S ARE INCLUDED AS AN INTEGRAL PART OF THE TEMPORARY TAPE PAVEMENT MARKINGS, THEN THE COST OF THE RAISED MARKERS SHALL BE CONSIDERED A PART OF THE TEMPORARY PAVEMENT MARKING ITEM AND SEPERATE RPM'S SHALL NOT BE REQUIRED.

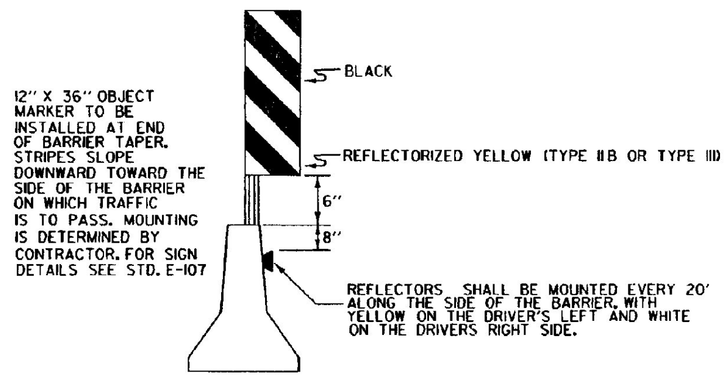

''CONCRETE MEDIAN BARRIER'', PROVIDE A MINIMUM TAPER RATE AS SHOWN IN THE TABLE BELOW, WITH A MINIMUM OF 50 FT. OF TANGENT SECTION ON EACH END OF THE WORK ZONE. THE END OF THE BARRIER FACING APPROACHING TRAFFIC SHALL MEET THE FOLLOWING REQUIREMENT; WHEN NO GUARDRAIL IS PRESENT, USE 30' OFFSET FROM EDGE OF TRAVELLED WAY. IF GUARDRAIL IS PRESENT, THEN CONCRETE BARRIER CAN BE TAPERED TO A DISTANCE BEYOND THE DEFLECTION DISTANCE OF THE GUARDRAIL. IF A 30' OFFSET IS NOT ATTAINABLE OR TO A DISTANCE BEYOND THE DEFLECTION DISTANCE OF THE GUARDRAIL, THEN A CRASH ATTENUATOR DESIGNED FOR THE REGULAR SPEED LIMIT OF THE ROADWAY SHALL BE PROVIDED.

IF THE BARRIER IS PLACED SUCH THAT THE TEMPORARY TAPE CAN BE PLACED OVER THE EXISTING DASHED LINE, THEN THE EDGELINES DO NOT NEED TO BE TAPERED BEFORE THE BARRIER AND THE DASHED MARKINGS DO NOT NEED TO BE REMOVED IN THE TANGENT SECTION.

IF THE BARRIER IS PLACED SUCH THAT COVERING THE DASHED LINES WITH THE TEMPORARY TAPE EDGELINE IS NOT POSSIBLE THEN THE EDGELINES SHALL BE TAPERED A LENGTH, L, BOTH IN ADVANCE AND BEYOND THE BARRIER PLACED ON TANGENT.

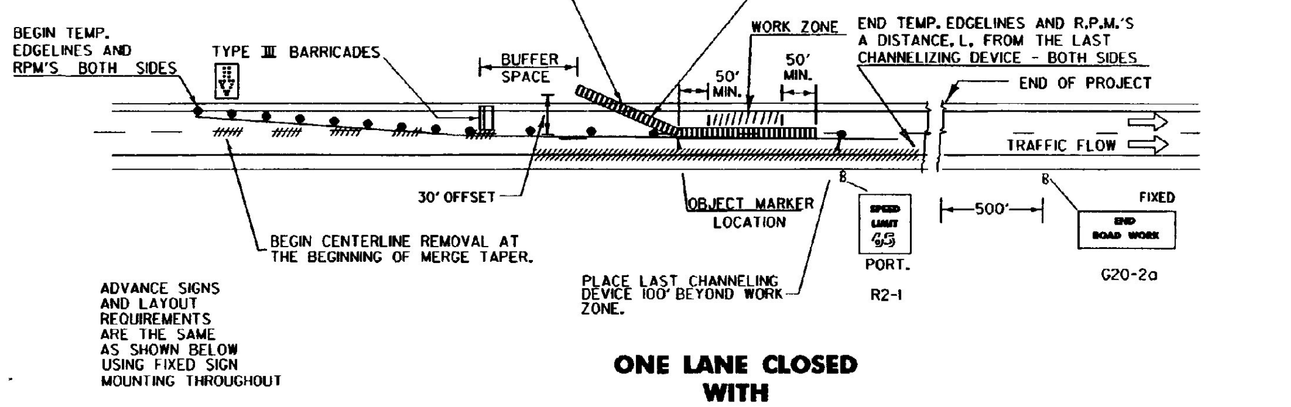

ONE LANE CLOSED WITH POSITIVE BARRIER PROTECTION

NOTES

1. WHEN CONSTRUCTION EQUIPMENT IS WORKING AT OR NEAR THE EXIT OR ENTRANCE RAMPS, FLAGPERSONS OR UNIFORMED TRAFFIC CONTROL OFFICERS (UTO'S) SHOULD BE USED TO ASSIST IN CONTROLLING TRAFFIC. SEE STD. E-106 FOR TRAFFIC CONTROL DETAILS.
2. ALL SIGNS SHALL BE PLACED BEFORE ANY WORK BEGINS OR EQUIPMENT IS PUT ON THE ROADWAY. SIGNS SHALL BE COVERED OR REMOVED WHEN NOT APPLICABLE, SEE STANDARD SHEET E-100 FOR REQUIREMENTS.
3. CONTRACTOR SHALL HAVE CHANNELIZING DEVICES AND SIGNS FOR LEFT SIDE CLOSURE AND RIGHT SIDE CLOSURE ON PROJECT BEFORE STARTING PROJECT.
4. EXISTING SPEED LIMIT SIGNS SHALL BE COVERED WHEN REDUCED SPEED SIGNS ARE POSTED.
5. CHANNELIZING DEVICES OTHER THAN REFLECTORIZED PLASTIC DRUMS WILL BE ALLOWED ALONG TANGENT SECTIONS AS LONG AS THEY CONFORM TO THE M.U.T.C.D. AND ARE APPROVED BY THE RESIDENT ENGINEER. THE TYPE OF DEVICE SHALL BE CONSISTENT THROUGHOUT THE TANGENT SECTION.
6. THE ''SPEED LIMIT XX'' AND OTHER RELATED SIGNS SHALL BE REMOVED OR COVERED WHEN WORK IS NOT IN PROGRESS AND ROADWAY IS NOT RESTRICTED.
7. ''REDUCED SPEED AHEAD'' SIGNS MAY BE USED IN LIEU OF ''SPEED ZONE AHEAD''.
8. FOR RELATIVELY SHORT TERM PROJECTS WITH NO OFFICIAL SPEED ZONE ENACTMENT, THE SPEED LIMIT AND REDUCED SPEED LIMIT SIGNS CAN BE SUBSTITUTED WITH ADVISORY SPEED PLAQUES MOUNTED AS SUPPLEMENTAL SIGNS ON OTHER WARNING SIGNS.
9. ALL FIXED SIGNS SHALL BE MOUNTED ON YIELDING STEEL, ALUMINUM OR WOOD SUPPORTS AS SHOWN ON APPROPRIATE STANDARD SHEETS.
10. PORTABLE SIGNS SHALL BE KEPT LEVEL WHEN PLACED ON THE EDGE OF ROADWAY AND ALL VEGETATION THAT INTERFERES WITH VISIBILITY OF THE SIGNS SHALL BE REMOVED. PAYMENT SUBSIDIARY TO OTHER ITEMS. WHEN PLACED BEHIND GUARDRAIL, THE BOTTOM OF THE SIGN FACES SHALL BE PLACED ABOVE THE TOP OF THE GUARDRAIL.
11. WARNING LIGHTS SHALL NOT BE USED ON CHANNELIZING DEVICES.
12. THE NUMBER OF CHANNELIZING DEVICES, TYPE III BARRICADES AND OTHER TRAFFIC CONTROL DEVICES SHOWN ON THIS SHEET ARE FOR ILLUSTRATIVE PURPOSES ONLY. THE ACTUAL NUMBER REQUIRED ARE TO BE DETERMINED BASED ON INDIVIDUAL DETOUR CONDITIONS (TAPERS, SPEED LIMITS, LENGTH OF DETOUR CURVE, ETC.)
13. FOR ANY LONG TERM CLOSURE (GREATER THAN 3 DAYS) EXISTING CENTERLINE SHALL BE REMOVED AND TEMPORARY EDGELINES PLACED AS SHOWN WITH POSITIVE BARRIER.

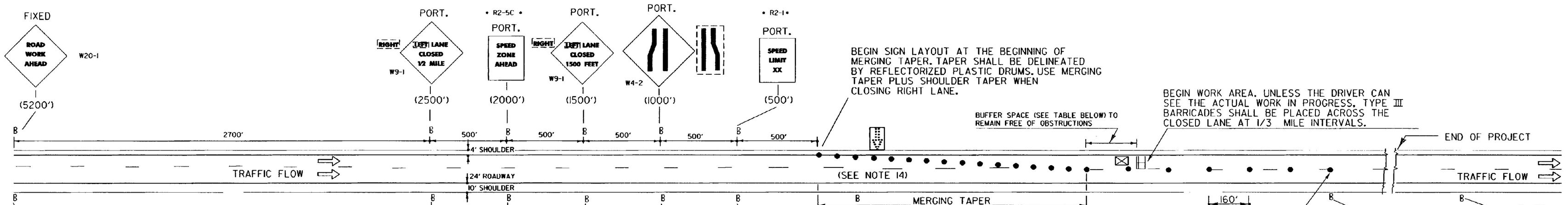

USE PORTABLE ''RIGHT OR LEFT LANE CLOSED 1 MILE'' WHEN SIGN PACKAGE IS MOVED FORWARD. SIGNS NOTED AS FIXED SHALL REMAIN IN PLACE THROUGH THE ENTIRE PROJECT. SIGNS NOTED AS PORTABLE SHALL MOVE AS THE WORK AREA CHANGES. ALL SIGNS SHALL BE REMOVED OR COVERED WHEN NOT NEEDED.

• R2-5C AND R2-1 TO BE USED ONLY WITH REGULATORY, TEMPORARY SPEED LIMITS. OTHERWISE USE W13-1 ADVISORY SPEED PLATES.

POSTED SPEED OR 85TH PERCENTILE M.P.H.	MERGING TAPER 12' LANE	SHOULDER TAPER W=10'	BARRIER TAPER RATE	BUFFER SPACE (MINIMUMS)
40	320'	90'	9 TO 1	160'
45	540'	150'	-	270'
50	600'	170'	11 TO 1	300'
55	660'	190'	-	330'
60	720'	200'	13 TO 1	360'
65	780'	220'	-	390'

MERGING TAPER LENGTH FOR WIDTHS OTHER THAN 12 FEET

TAPER FORMULA:

$L = S \times W$ FOR SPEEDS OF 45 OR MORE.

$L = \frac{WS^2}{60}$ FOR SPEEDS OF 40 OR LESS.

WHERE:

L = MINIMUM LENGTH OF TAPER.

S = NUMERICAL VALUE OF POSTED SPEED LIMIT PRIOR TO WORK OR 85 PERCENTILE SPEED.

W = WIDTH OF OFFSET.

LEGEND

(500) - DENOTES DISTANCE FROM BEGIN MERGE TAPER

- FLASHING ARROW PANEL
- REFLECTORIZED PLASTIC DRUM
- PAVEMENT MARKING REMOVAL
- CONCRETE MEDIAN BARRIER
- TYPE III BARRICADE
- TRUCK/TRAILER MOUNTED ATTENUATOR (OPTIONAL)

IF CONSTRUCTION ACTIVITIES REDUCE LANE WIDTHS TO THE POINT WHERE 40 MPH CANNOT BE MAINTAINED, ADDITIONAL ADVISORY SPEED PLATE SIGNS SHALL BE INSTALLED UNDER THE LANE REDUCTION TRANSITION SIGN. FLAGPERSONS AND U.T.O.'S SHALL NOT BE ALLOWED TO INTERFERE WITH TRAFFIC BY STEPPING INTO THE LANE TO REDUCE THE DRIVER'S SPEED.

OTHER STDS. REQUIRED: E-100, E-101, E-102, E-102A, E-107A

REVISIONS AND CORRECTIONS

OCT. 30, 1987 - DATE OF ORIGINAL ISSUE
JAN. 23, 1989 - FHWA COMMENTS - CHANGE TO 65 M.P.H. TAPER RATES
OCT. 21, 1992 - ADDED TAPER RATE TABLE & REVISED TITLE BLOCK
AUG. 08, 1995 - DELETED AN INVALID NOTE

APPROVED FOR THIS PROJECT AND/OR DESIGN IMPLEMENTATION. FHWA FINAL APPROVAL PENDING.

APPROVED

Gordon S. MacCathon
DIRECTOR OF ENGINEERING

David A. Ross
TRAFFIC AND SAFETY ENGINEER

MAINLINE TRAFFIC CONTROL DIVIDED HIGHWAY ONE LANE CLOSED

/traf/std/stde103.dgn : stde103.i

VERMONT AGENCY OF TRANSPORTATION

STANDARD
E-103

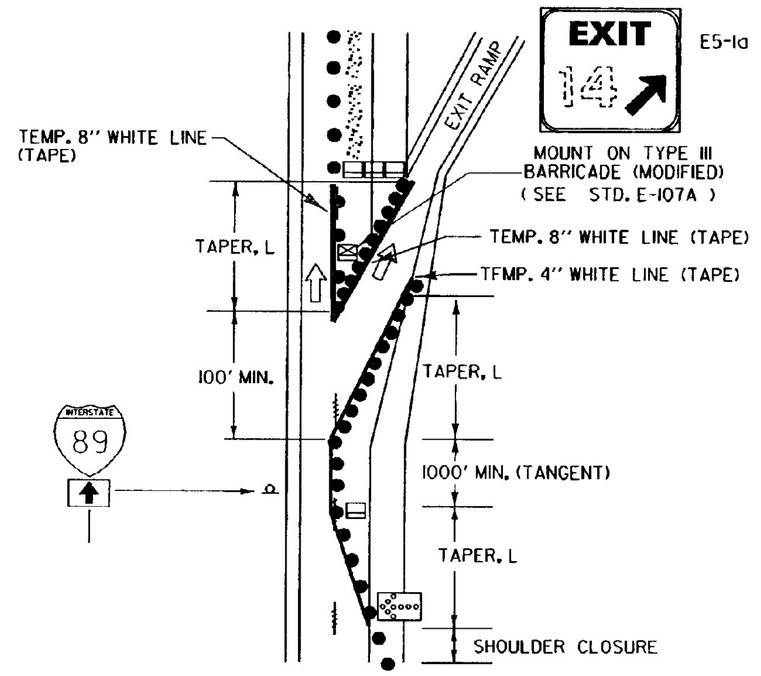

NOT TO SCALE

MAINLINE LANE CLOSURE AT AN EXIT RAMP

THIS DETAIL SHALL BE USED WHEN THE WORK ZONE BEGINS AT THE GORE OR THE MAINLINE LANE CLOSURE DRUM PLACEMENT INTERFERES WITH THE EXIT RAMP.

NOTES:

1) ALL SIGNS SHALL BE MOUNTED ON FIXED POSTS (YIELDING TYPE) UNLESS OTHERWISE NOTED.
2) CHANNELIZING DEVICES SHALL BE PLACED AS FOLLOWS:
   TAPERS - DEVICES SHALL BE SPACED A MAXIMUM OF "S" (THE SPEED LIMIT IN FEET) APART.
   TANGENT - DEVICES SHALL BE SPACED 2 X "S" (THE SPEED LIMIT IN FEET) APART.
3) ALL DISTANCES ARE DESIRABLE MINIMUMS FIELD CONDITIONS SHALL CONTROL THE ACTUAL PLACEMENT.
4) TAPER RATES ARE BASED ON THE POSTED MAILINE AND EXIT SPEEDS.
5) TEMPORARY PAVEMENT MARKINGS ARE REQUIRED WHEN THE LAYOUT IS TO BE IN EFFECT FOR THREE DAYS OR MORE.
6) LANE CLOSURES AND TAPER LENGTHS, L, AS DETAILED ON STANDARD E-103.
7) EXIT SIGN SHALL BE MOUNTED A MINIMUM OF 3' ABOVE THE GROUND AND HIGH ENOUGH TO BE SEEN ABOVE CHANNELIZING DEVICES.

LEGEND

- REFL. 28" CONES
- REFL. PLASTIC DRUMS
- PAVEMENT MARKING REMOVAL
- INDICATES TRAFFIC FLOW
- WORK AREA
- FLASHING ARROW PANEL
- TYPE III BARRICADES
- TYPE III BARRICADES (MOD.)

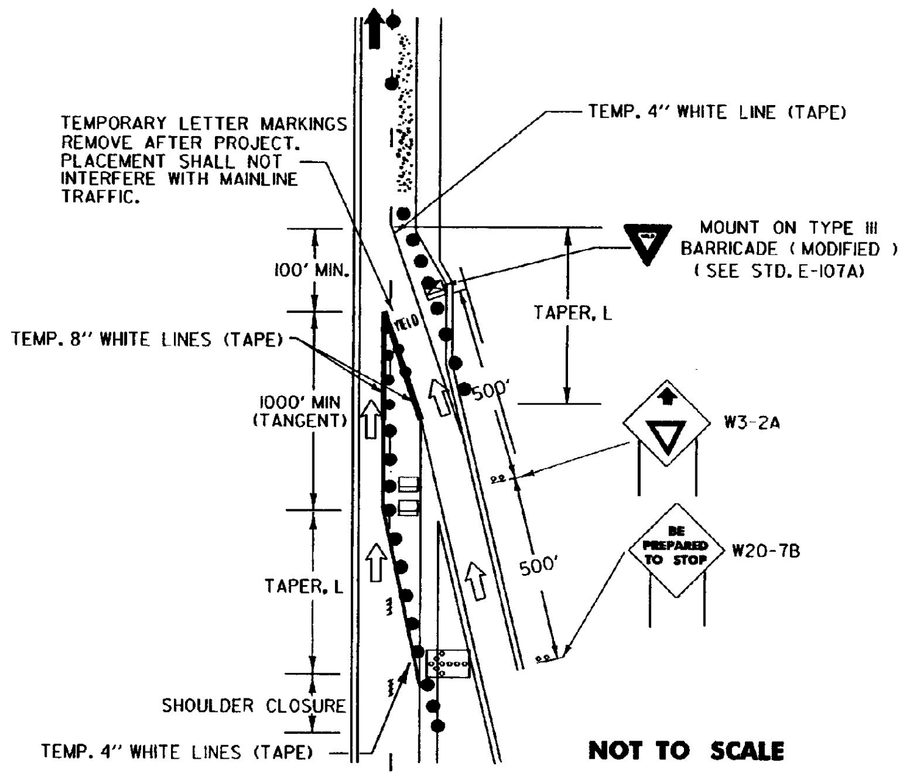

NOT TO SCALE

MAINLINE LANE CLOSURE AT AN ENTRANCE RAMP

THIS DETAIL SHALL BE USED WHEN THE WORK ZONE BEGINS AT AT THE END OF THE ACCELERATION LANE OR THE MAINLINE LANE CLOSURE DRUM PLACEMENT INTERFERES WITH THE ON-RAMP TRAFFIC.

IF THE LENGTH OF THE ACCELERATION LANE IS NOT ADEQUATE, THE YIELD SIGN SHALL BE REPLACED WITH A STOP SIGN. IF A STOP SIGN IS USED, IT SHOULD BE ACCOMPANIED BY A STOP BAR.

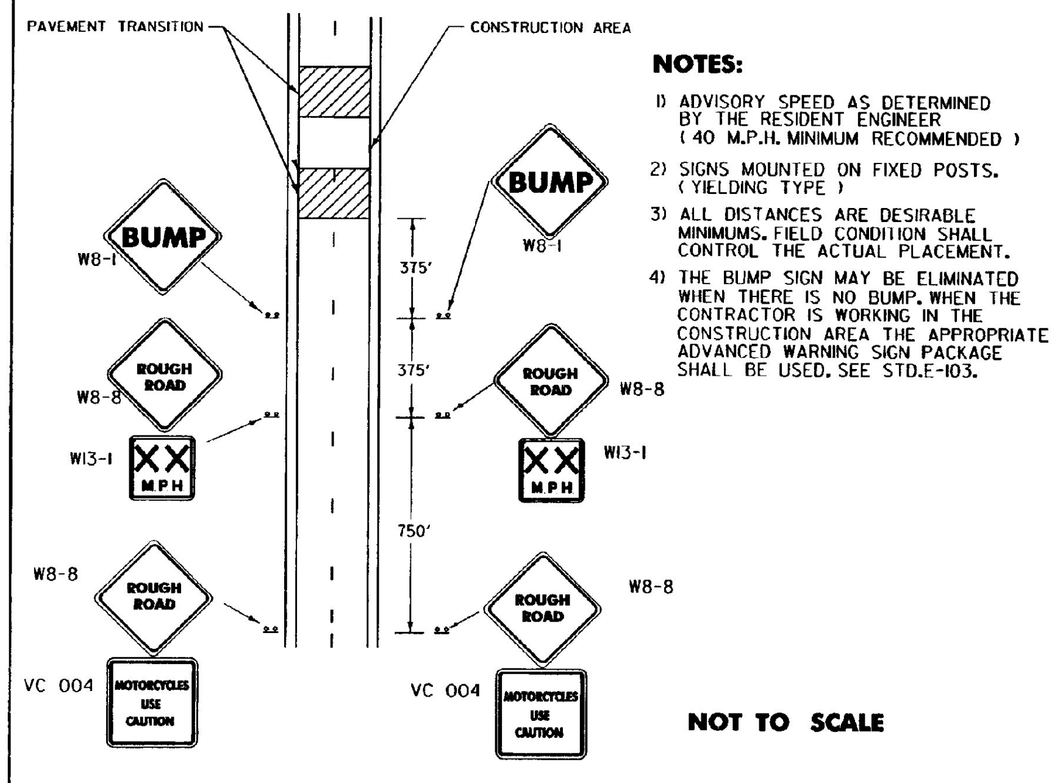

NOTES:

1) ADVISORY SPEED AS DETERMINED BY THE RESIDENT ENGINEER (40 M.P.H. MINIMUM RECOMMENDED)
2) SIGNS MOUNTED ON FIXED POSTS. (YIELDING TYPE)
3) ALL DISTANCES ARE DESIRABLE MINIMUMS. FIELD CONDITION SHALL CONTROL THE ACTUAL PLACEMENT.
4) THE BUMP SIGN MAY BE ELIMINATED WHEN THERE IS NO BUMP. WHEN THE CONTRACTOR IS WORKING IN THE CONSTRUCTION AREA THE APPROPRIATE ADVANCED WARNING SIGN PACKAGE SHALL BE USED. SEE STD.E-103.

NOT TO SCALE

ADVANCED WARNING SIGN PACKAGE FOR COLD PLANED (SCARIFIED) SURFACES.

NOTES:

1.) 28" CONES SHALL BE USED ON ROADWAYS WITH SPEED LIMITS OF 35 MPH OR MORE AND ON ALL ROADWAYS DURING HOURS OF DARKNESS.
2.) CONES MAY BE WEIGHTED TO PREVENT OVER-TURNING, HOWEVER THE WEIGHTS SHALL NOT PRESENT A HAZARD IF THE CONE IS STRUCK.
3.) REFLECTIVE SHEETING SHALL BE ENCAPSULATED LENS.

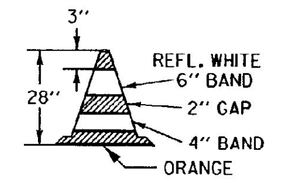

28" REFLECTORIZED CONE

SAND BAGS OR AN APPROPRIATE BALLASTING DEVICE, WHICH DOES NOT PRESENT A HAZARD TO THE IMPACTING VEHICLE OR BECOME A PROJECTILE UPON IMPACT, SHALL BE USED TO WEIGHT DRUMS.

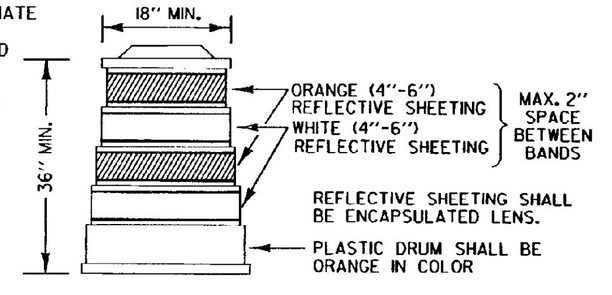

REFLECTORIZED PLASTIC DRUM

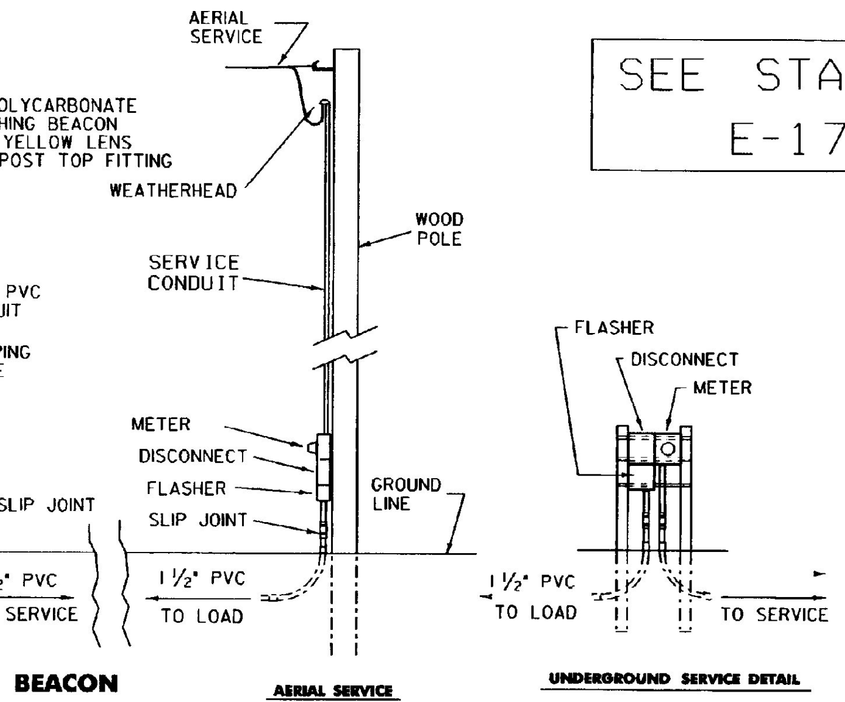

FLASHING BEACON DETAIL

AERIAL SERVICE WITHHOUT LUMINAIRE

SEE STANDARD E-175

UNDERGROUND SERVICE DETAIL

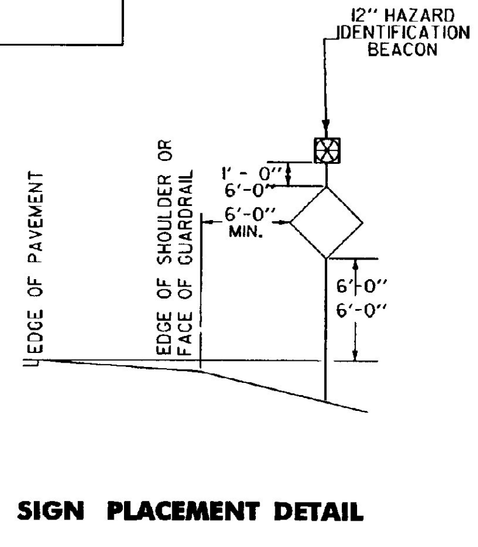

SIGN PLACEMENT DETAIL

NOTES:

1.) AT THE CONTRACTOR'S OPTION:
   A. THE POWER SUPPLY MAY BE AERIAL OR UNDERGROUND (SEE DETAIL).
   B. POWER FOR A FLASHING BEACON MAY BE COMBINED WITH POWER FOR A TRAFFIC SIGNAL OR THEY MAY HAVE SEPARATE POWER SOURCES.
   C. THE FLASHER MAY BE INSTALLED ON A STANCHION NEAR THE SIGN, ON A UTILITY POLE (WITH UTILITY COMPANY APPROVAL) OR AT THE SAME LOCATION AS A TRAFFIC SIGNAL CONTROLLER.
2.) THE FLASHER UNIT SHALL BE ONE CIRCUIT AND INCLUDE A RADIO INTERFERENCE FILTER.
3.) BATTERY OPERATED FLASHERS WILL NOT BE ALLOWED.
4.) BOTTOM OF THE BEACON SHALL BE A MIN. OF 8'-0" AND A MAX. OF 12'-0" ABOVE THE EDGE OF THE PAVEMENT.
5.) FOR URBAN AREA PLACEMENT SEE STD. E-121.

OTHER STDS. REQUIRED: E-101, E-102, E-102A, E-103, E-107A, E-136, E-150, E-175

REVISIONS AND CORRECTIONS

APR 12, 1988 - DATE OF ORIGINAL ISSUE
JAN 23, 1989 - REVISED EXIT SIGN - CLARIFIED EXIT TAPER
SEPT 20, 1993 - REVISED RAMP CLOSURES, FLASHING BEACON DETAILS AND MOVED TYPE III BARRICADE (MOD) TO STDE-107A
AUG 08, 1995 - REVISED BEACON SIZE

APPROVED

Gordon S. MacArthur
DIRECTOR OF ENGINEERING

David A. Ross
TRAFFIC AND SAFETY ENGINEER

APPROVED FOR THIS PROJECT AND/OR DESIGN IMPLEMENTATION. FHWA FINAL APPROVAL PENDING.

TRAFFIC CONTROL MISCELLANEOUS DETAILS

/traf/std/stdel06.dgn : stdel06.i

VERMONT AGENCY OF TRANSPORTATION

STANDARD E-106

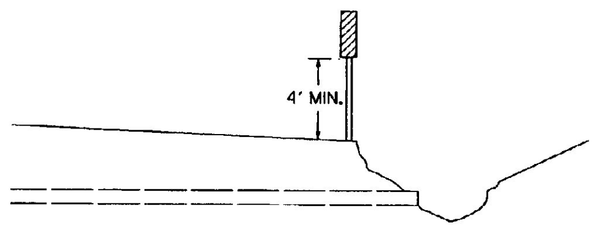

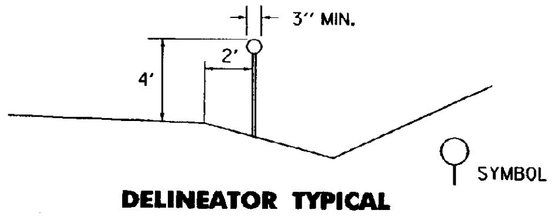

DELINEATOR TYPICAL

DELINEATORS SHALL BE REFLECTORIZED WHITE IN COLOR. THEY SHALL HAVE A MINIMUM OF 7 SQUARE INCHES. THEY MAY BE ROUND, SQUARE, OR OBLONG.

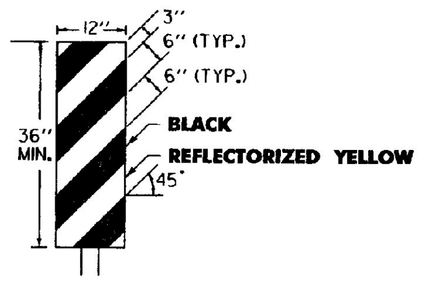

OBJECT MARKER TYPICAL

OBJECTS MARKERS ARE USED TO MARK OBSTRUCTIONS WITHIN OR ADJACENT TO THE ROADWAY. IN SOME CASES THERE MAY NOT BE A PHYSICAL OBJECT INVOLVED, BUT OTHER ROADSIDE CONDITIONS SUCH AS NARROW SHOULDER DROP-OFFS, GORES, D.I. EXCAVATIONS, AND ABRUPT CHANGES IN THE ROADWAY ALIGNMENT MAY MAKE IT UNDESIRABLE FOR A DRIVER TO LEAVE THE ROADWAY. THE INSIDE EDGE OF THE OBJECT MARKER SHALL BE IN LINE WITH THE INNER EDGE OF THE OBSTRUCTION, WHENEVER POSSIBLE.
OBJECT MARKERS SHALL HAVE ALTERNATING BLACK AND REFLECTORIZED YELLOW STRIPES. (SLOPING DOWNWARD IN THE DIRECTION TRAFFIC IS TO PASS).

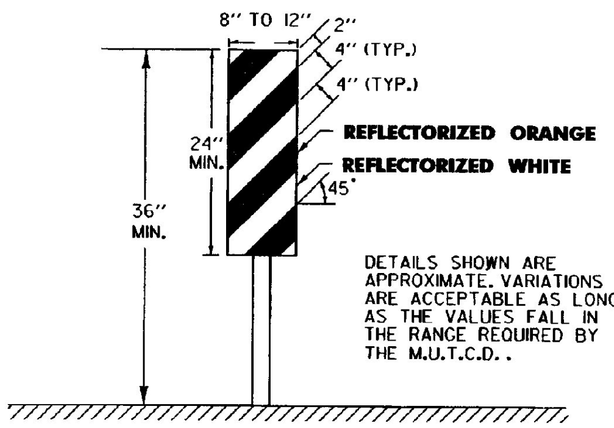

DETAILS SHOWN ARE APPROXIMATE. VARIATIONS ARE ACCEPTABLE AS LONG AS THE VALUES FALL IN THE RANGE REQUIRED BY THE M.U.T.C.D..

VERTICAL PANEL

VERTICAL PANELS SHALL HAVE ALTERNATING ORANGE AND WHITE REFLECTORIZED STRIPES (SLOPING DOWNWARD IN THE DIRECTION TRAFFIC IS TO PASS). THESE DEVICES MAY BE USED FOR TRAFFIC SEPARATION, CHANNELIZING OR BARRICADING WHERE SPACE IS AT A MINIMUM.

DELINEATOR, VERTICAL PANEL AND OBJECT MARKER DETAILS FOR CONSTRUCTION AREAS WHERE TRAFFIC IS MAINTAINED

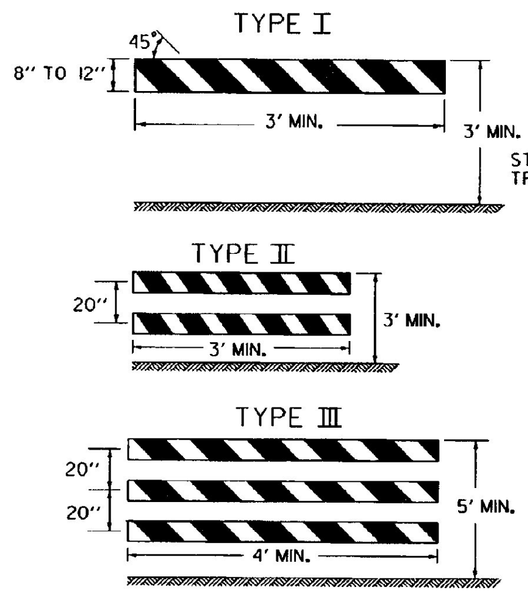

A TYPE III(MODIFIED) BARRICADE SHALL CONSIST OF TYPE II RAILS MOUNTED ON A BREAKAWAY BARRICADE AS SHOWN ON STANDARD SHEET E-107A.

BARRICADE CHARACTERISTICS			
	I	II	III
WIDTH OF RAIL	8" MIN. 12"MAX.	8" MIN. 12"MAX.	8" MIN. 12"MAX.
LENGTH OF RAIL	3' MIN.	3' MIN.	4' MIN.
WIDTH OF STRIPES	6"	6"	6"
HEIGHT	3' MIN.	3' MIN.	5' MIN.
TYPE OF FRAME	SEE E-107A	SEE E-107A	SEE E-107A
FLEXIBILITY	PORTABLE	PORTABLE	PORTABLE
ANGLE OF STRIPE	45°	45°	45°
COLOR OF STRIPES	ORANGE AND WHITE	ORANGE AND WHITE	ORANGE AND WHITE

BARRICADE CHARACTERISTICS

BARRICADES

APPLICATION NOTES

TYPE I BARRICADES SHALL BE USED ON CONVENTIONAL ROADS OR URBAN STREETS AND ARTERIALS TO MARK A SPECIFIC HAZARD.

TYPE II BARRICADES SHALL BE USED ON EXPRESSWAYS AND FREEWAYS, SERVING THE SAME FUNCTIONS AS TYPE I BARRICADES.

TYPE III BARRICADES (SEE STD. E-107A) SHALL ONLY BE USED WHEN A ROAD SECTION OR LANE IS CLOSED TO TRAFFIC AND ARE TO BE ERECTED AT THE POINT OF CLOSURE.

MATERIALS

THE BARRICADES SHOWN ON THIS SHEET SHOULD BE OF LIGHTWEIGHT MATERIAL. IF WOOD IS USED THE FOLLOWING CONDITIONS SHALL APPLY:

1. WOODEN BARRICADES (TYPE I AND II)
   A) SHALL NOT BE USED TO CHANNELIZE OR DELINEATE WORK AREAS WITHIN THE CLEAR ZONE OF ANY HIGHWAY WHERE OPERATING SPEEDS IN EXCESS OF 20 M.P.H. ARE EXPECTED UNLESS INSTALLED FOR PEDESTRIAN CONTROL BEHIND APPROVED POSITIVE BARRIERS.
   B) MAY BE USED WHERE OPERATING SPEEDS OF 20 M.P.H. OR LESS ARE EXPECTED.
2. TYPE III WOODEN BARRICADES SHALL NOT BE USED.

COLORS

THE BARRICADE PANELS SHOWN ON THIS SHEET SHALL HAVE AN ALTERNATING REFLECTORIZED WHITE AND ORANGE STRIPES. THE ORANGE SHALL CONFORM WITH THE STANDARD COLORS ADOPTED BY THE AMERICAN ASSOCIATION OF STATE HIGHWAY AND TRANSPORTATION OFFICIALS AND APPROVED BY THE U.S. DEPARTMENT OF TRANSPORTATION FEDERAL HIGHWAY ADMINISTRATION. THE BARRICADE COMPONENTS SHALL BE WHITE UNLESS UNPAINTED METAL OR ALUMINUM IS USED.

REFLECTORIZATION

THE REFLECTIVE SHEETING ON BARRICADE PANELS SHALL BE TYPE III.

LOCATION

THE BARRICADES SHOWN ON THIS SHEET WILL BE LOCATED BY THE RESIDENT ENGINEER IN THE FIELD OR AS SHOWN ON THE PLANS. THE LOCATION OF THE BARRICADES SHALL FOLLOW THE PROCEDURES SET FORTH IN THE ''MANUAL ON UNIFORM TRAFFIC CONTROL DEVICES'', OR AS OTHERWISE NOTED.

MAINTENANCE

BARRICADES SHALL BE MAINTAINED IN CLEAN CONDITION, SATISFACTORY TO THE RESIDENT ENGINEER. THEY SHALL BE COMPLETELY VISIBLE TO THE APPROACHING TRAFFIC AT ALL TIMES. DAMAGED, DEFACED, OR DIRTY BARRICADES SHALL BE REPAIRED, CLEANED, OR REPLACED AS ORDERED BY THE RESIDENT ENGINEER.

ALL SIGN PLACEMENT DISTANCES ARE DESIRABLE SPECIFICATIONS. FIELD CONDITIONS SHALL CONTROL THE ACTUAL PLACEMENT. PROJECT CONSTRUCTION APPROACH SIGNING PLACEMENT SHALL TAKE INTO CONSIDERATION SPACING REQUIREMENTS FOR THE DETOUR SIGN LAYOUT REQUIREMENTS.

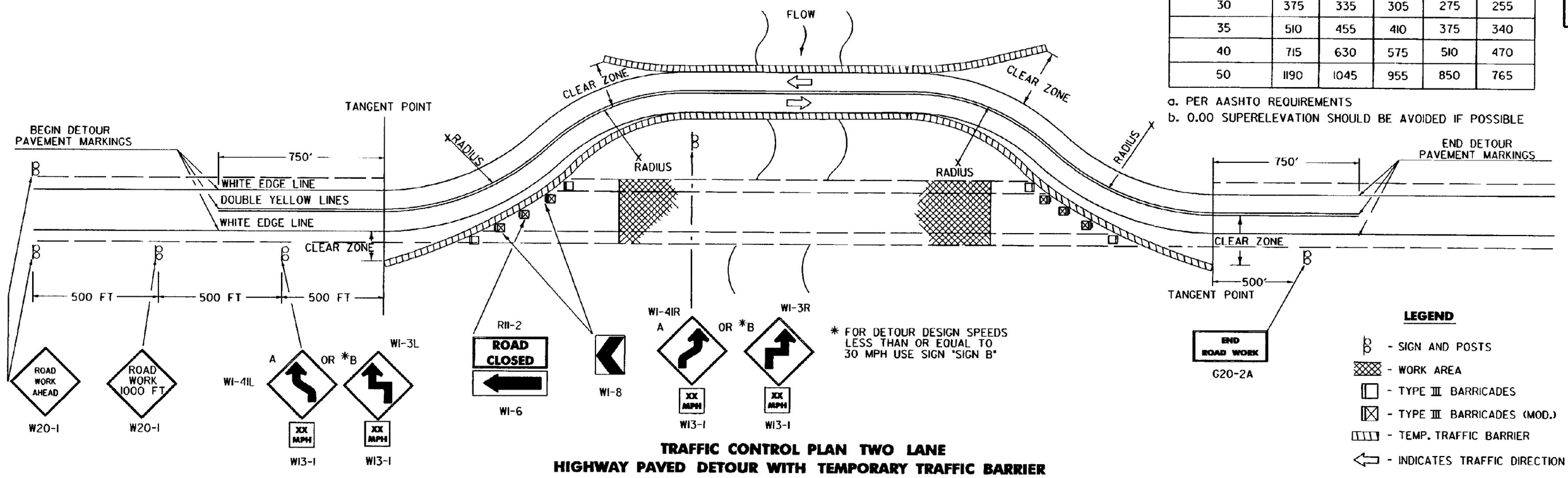

* FOR DETOUR DESIGN SPEEDS LESS THAN OR EQUAL TO 30 MPH USE SIGN "SIGN B"

LEGEND

- SIGN AND POSTS
- WORK AREA
- TYPE III BARRICADES
- TYPE III BARRICADES (MOD.)
- TEMP. TRAFFIC BARRIER
- INDICATES TRAFFIC DIRECTION

TRAFFIC CONTROL PLAN TWO LANE HIGHWAY PAVED DETOUR WITH TEMPORARY TRAFFIC BARRIER

DETOUR DESIGN SPEED	MINIMUM RADIUS (FT.)[a] SUPERELEVATION (FT./FT.)				
(M.P.H.)	0.00[b]	0.02	0.04	0.06	0.08
20	160	140	130	120	110
25	245	220	200	185	170
30	375	335	305	275	255
35	510	455	410	375	340
40	715	630	575	510	470
50	1190	1045	955	850	765

a. PER AASHTO REQUIREMENTS
b. 0.00 SUPERELEVATION SHOULD BE AVOIDED IF POSSIBLE

DETOUR NOTES

1.) SIGNS AND DELINEATION SHOWN FOR ONE DIRECTION OF TRAFFIC ONLY.

2.) THE CONTRACTOR IS RESPONSIBLE FOR PAVEMENT MARKING AND SHALL REMOVE ANY CONFLICTING OR CONFUSING EXISTING MARKINGS.

3.) ADDITIONAL SIGNING MAY BE REQUIRED AT THE DISCRETION OF THE RESIDENT ENGINEER.

4.) UNPAVED DETOURS REQUIRE PAVEMENT MARKINGS FOR TRANSITIONS FROM EXISTING PAVEMENT.

5.) THE NUMBER OF CHANNELIZING DEVICES, BARRICADES AND OTHER TRAFFIC CONTROL DEVICES SHOWN ON THIS SHEET ARE FOR ILLUSTRATIVE PURPOSES ONLY. THE ACTUAL NUMBER REQUIRED SHALL BE DETERMINED BASED ON INDIVIDUAL DETOUR CONDITIONS (TAPERS, SPEED LIMITS, LENGTH OF DETOUR CURVE, ETC.).

6.) AASHTO CLEAR ZONE REQUIREMENTS SHOULD BE MET. IF NOT THEN AN APPROVED ENERGY ABSORPTION ATTENUATOR SUITABLE FOR THE TEMPORARY TRAFFIC BARRIER USED AND FOR THE DESIGN SPEED SHALL BE INSTALLED PER THE CURRENT AASHTO ROADSIDE DESIGN GUIDE.

7.) THE DETOUR DESIGN SPEED SHOULD BE NO LESS THAN 10 M.P.H. BELOW THE POSTED SPEED LIMIT, UNLESS PHYSICAL RESTRICTIONS PREVENT THIS.

8.) SEE STANDARD SHEETS E-100, E-101 AND E-102 FOR SIGN DETAIL AND MATERIAL REQUIREMENTS.

9.) IF THE USE OF TEMPORARY TRAFFIC BARRIER IS NOT REQUIRED, THEN REFLECTORIZED PLASTIC DRUMS SHALL BE USED.

OTHER STDS. REQUIRED: E-100, E-101, E-102, E-102a, E-107a

REVISIONS AND CORRECTIONS

SEPT. 10, 1987 - DATE OF ORIGINAL ISSUE
APRIL 29, 1988 - FHWA REVIEW COMMENTS
SEPT. 20, 1993 - NEW RADIUS CHART, BARRICADE ALIGNMENT AND USE OF TEMPORARY TRAFFIC BARRIER
AUG. 08, 1995 - REVISED SIGNING PER MUTCD

APPROVED FOR THIS PROJECT AND/OR DESIGN IMPLEMENTATION. FHWA FINAL APPROVAL PENDING.

APPROVED

Freedom O. MacArthur
DIRECTOR OF ENGINEERING

David A. Ross
TRAFFIC AND SAFETY ENGINEER

DELINEATION, BARRICADES AND DETOURS FOR CONSTRUCTION AREAS

/traf/std/stdel07.dgn : stdel07.1

VERMONT AGENCY OF TRANSPORTATION

STANDARD E-107

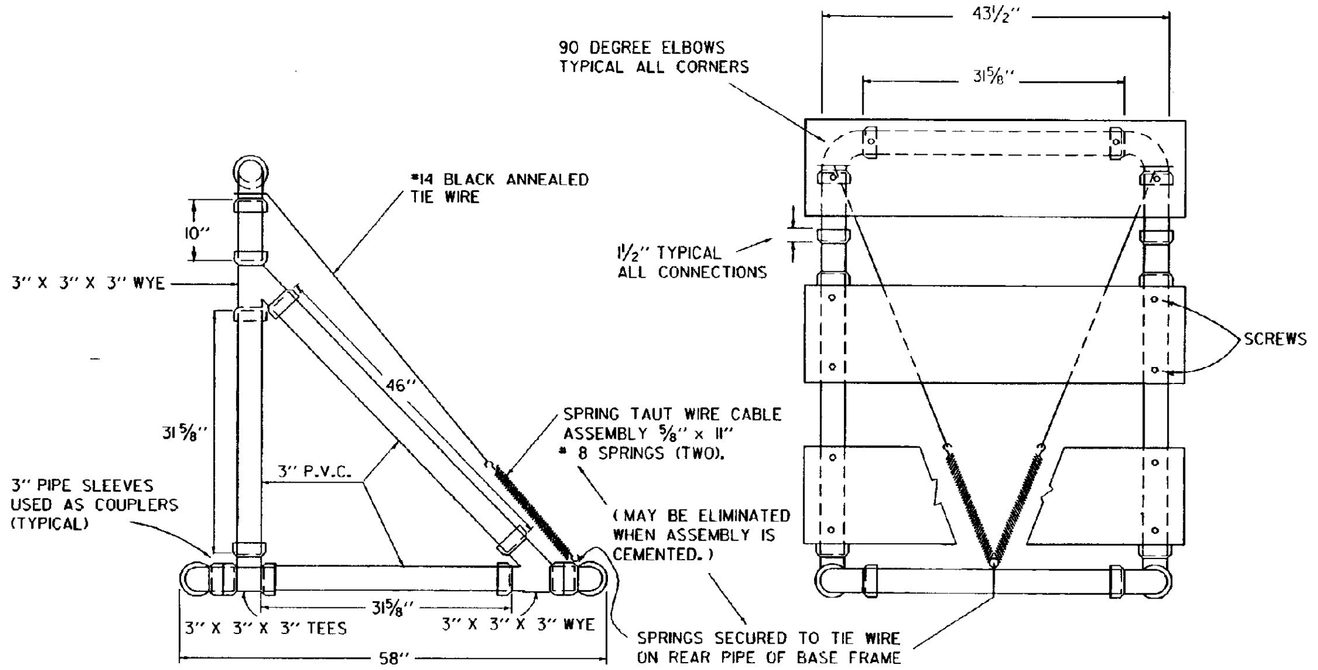

SIDE VIEW
TYPE III BARRICADE

FRONT VIEW
TYPE III BARRICADE

MATERIALS FOR TYPE I AND II BARRICADES

20' - 1" PVC
4 - 1" PVC 90° ELBOWS
30" -½" ID THINWALL PVC CONDUIT
36" -¼" STEEL ROD
4 - 1" WASHERS
24" - LIGHT DUTY CHAIN
½" - #14 PAN HEAD METAL SCREWS (AS REQUIRED)
2 -¾" COTTER PINS
2 OR 4 - 8" OR 12" X 36" X 0.025 " BARRICADE RAILS (AS REQUIRED)

MATERIALS FOR TYPE III BARRICADES

30 LF - 3" I.D. PVC PIPE
6 - 3" 90 ELBOWS
2 - 3" TEES
4 - 3" WYES
3 - 8" OR 12" X 48" X 0.025" BARRICADE RAILS
2 - 5/8" X 11" #8 SPRING (IF ASSEMBLY IS NOT CEMENTED)
12 - 1" #14 PAN HEAD METAL SCREWS
15 LF - #14 BALCK ANNEALED TIE WIRE (IF ASSEMBLY IS NOT CEMENTED)

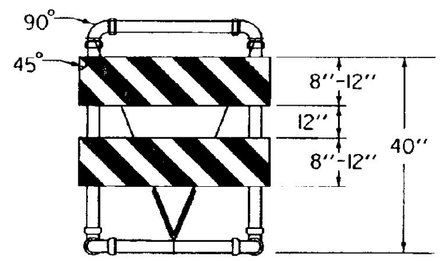

TYPE III (MODIFIED) BARRICADE
(STRIPING IS SHOWN WITH TRAFFIC PASSING TO THE RIGHT).

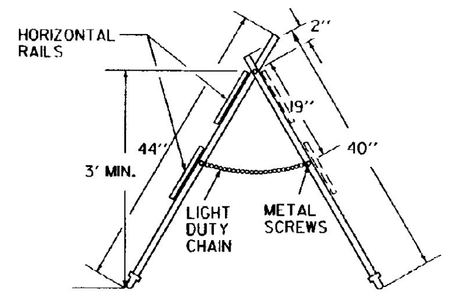

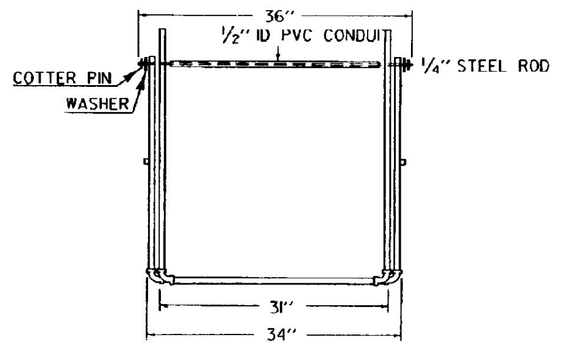

TYPE I AND TYPE II BARRICADE

MATERIALS

THE PIPE, WYES, TEES AND ELBOWS USED TO CONSTRUCT BARRICADES SHALL CONFORM TO THE REQUIREMENTS OF ASTM DESIGNATION D 2241 FOR P.V.C. 1120 OR 1220 SDR-21, PRESSURE RATING 200 PSI. THE WYES, TEES AND ELBOWS SHALL CONFORM TO THE REQUIREMENTS OF ASTM DESIGNATION D 2466, TYPE II, GRADE 1. ALL JOINTS SHALL BE SLIP-FIT AND MAY BE LIGHTLY CEMENTED. THE BARRICADE RAILS SHALL BE FABRICATED FROM 0.025" ANODIZED, ALUMINUM AND SHALL HAVE REFLECTORIZED ALTERNATING ORANGE AND WHITE STRIPES (SLOPING DOWNWARD AT AN

MAINTENANCE

BARRICADES SHALL BE MAINTAINED IN CLEAN AND LEGIBLE CONDITIONS SATISFACTORY TO THE ENGINEER. THEY SHALL BE COMPLETELY VISIBLE TO APPROACHING TRAFFIC AT ALL TIMES. DAMAGED, DEFACED, OR DIRTY BARRICADES SHALL BE REPAIRED, CLEANED OR REPLACED AS ORDERED BY THE ENGINEER. THE P.V.C. PIPE AND FITTINGS SHALL BE WHITE IN COLOR. AT LEAST TWO (2) HOLES SHALL BE DRILLED (⅜" DIAM.) IN EACH SECTION OF PIPE AND FITTINGS IF THE ASSEMBLY IS NOT CEMENTED.

WHICH WILL NOT CONSTITUTE A HAZARD IF THE BARRICADE IS HIT. THESE SHALL BE PLACED ONLY ON THE FRONT AND REAR PIPES OF THE BASE FRAME

BE A HAZARD TO VEHICLES PASSING ON EITHER SIDE.
GLUED JOINTS MAY PROVIDE ADDITIONAL STABILITY TO THE INSTALLATION.

TYPE I BARRICADES SHALL UTILIZE ONE HORIZONTAL RAIL IN EACH DIRECTION.

TYPE II BARRICADES SHALL BE A TYPE I BARRICADE WITH AN ADDITIONAL HORIZONTAL RAIL MOUNTED BELOW THE OTHER IN EACH DIRECTION.

TYPE III BARRICADES (MODIFIED) SHALL CONSIST OF THE BREAKAWAY 3" PVC DESIGN SHOWN ON THIS SHEET WITH THE TWO RAIL LAYOUT DETAILED ABOVE LEFT.

SEE STD E-107 FOR ADDITIONAL INFORMATION.

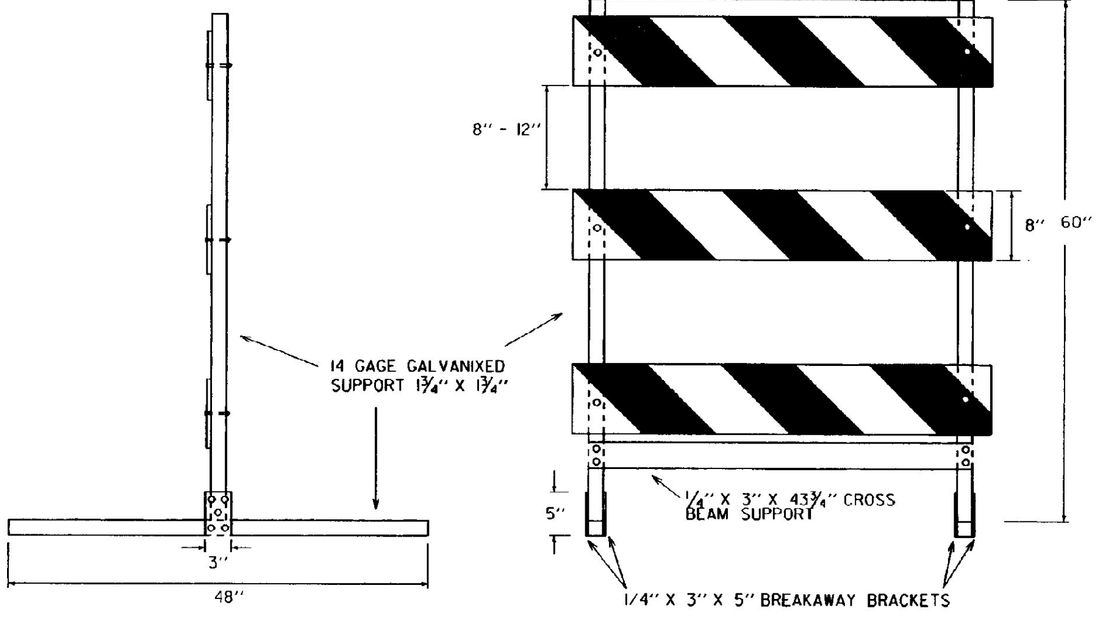

SIDE AND FRONT VIEW OF TYPE III METAL BARRICADE

MATERIALS FOR METAL TYPE III BARRICADES

PANELS (3):
8" X 48" GALVANIZED STEEL...COVERED 1 OR 2 SIDES WITH WHITE/ORANGE, DIAGONALLY STRIPED REFLECTIVE SHEETING

VERTICAL SUPPORTS (2): 14 GAGE GALVANIZED TUBING 1 3/4" X 1 3/4" X 60"
HORIZONTAL SUPPORTS (2): 14 GAGE GALVANIZED TUBING 1 3/4" X 1 3/4" X 48"
CROSS BEAM SUPPORT (1): COLD GALVANIZED STEEL 1/4" X 3" X 43 3/4"
BREAKAWAY BRACKETS (4): COLD GALVANIZED STEEL 1/4" X 3" X 5"

FASTENERS:
6 - SHEAR BOLTS WITH LOCK NUTS 1/4"D X 2 3/4"
4 - FULCRUM BOLTS WITH LOCK NUTS 3/8"D X 2 3/4"
4 - FASTENER BOLTS WITH LOCK NUTS 3/8"D X 2 3/4"
6 - PANEL BOLTS WITH LOCK NUTS AND WASHERS 1/4"D X 2"
ALL FASTENERS GALVANIZED STEEL.
ALL BOLTS HEX HEAD.

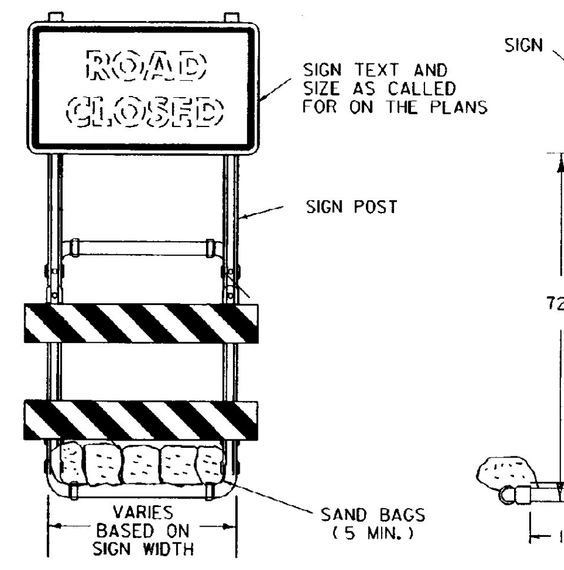

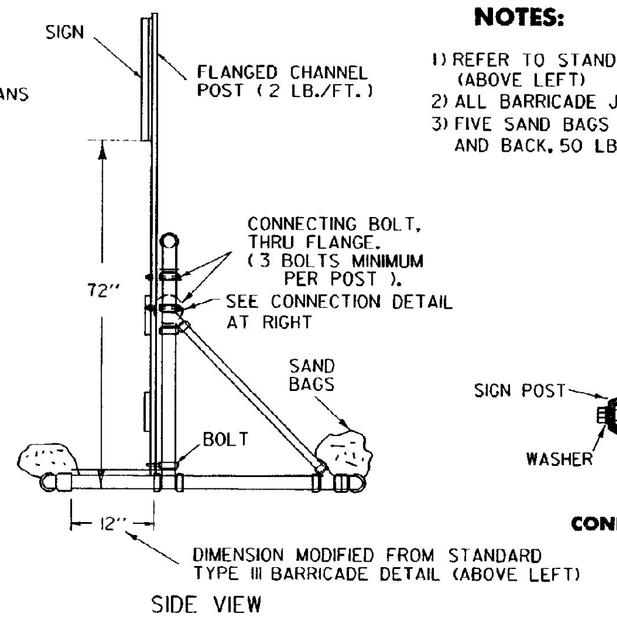

NOTES:

1) REFER TO STANDARD TYPE III BARRICADE (ABOVE LEFT)
2) ALL BARRICADE JOINTS SHALL BE GLUED.
3) FIVE SAND BAGS ARE REQUIRED BOTH FRONT AND BACK, 50 LB. MINIMUM EACH.

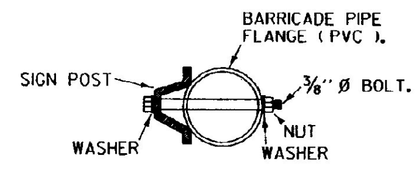

CONNECTION DETAIL

SIGN MOUNTING ON TYPE III BARRICADE (MODIFIED)

OTHER STDS. REQUIRED: E-107

REVISIONS AND CORRECTIONS

SEPT. 10, 1987 ADDED METAL TYPE III BARRICADE
SEPT. 20, 1993 - REVISED NOTES AND TYPE III (MOD.) BARRICADE DETAIL
AUG. 08, 1995 - ADDED METAL TYPE III BARRICADE

APPROVED FOR THIS PROJECT AND/OR DESIGN IMPLEMENTATION. FHWA FINAL APPROVAL PENDING.

APPROVED

Gordon S. MacArthur
DIRECTOR OF ENGINEERING

David A. Ross
TRAFFIC AND SAFETY ENGINEER

BREAKAWAY BARRICADE DETAILS

/traf/std/stdel07a.dgn : stdel07a.i

VERMONT AGENCY OF TRANSPORTATION

STANDARD
E-107 A

CONDITION 1
DROP-OFF ADJACENT TO TRAVELLED-WAY

TYPE A

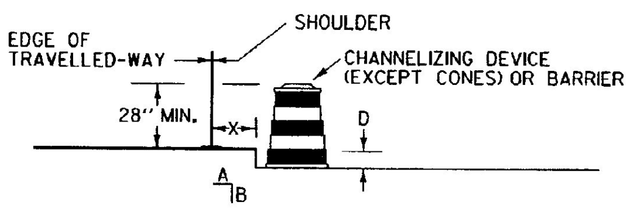

TYPE B

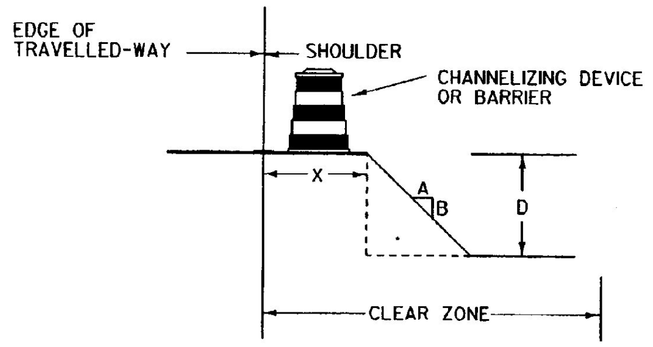

NOTES:

1. CHANNELIZING DEVICES OR BARRIER SHOULD BE PLACED TO MAXIMIZE THE WIDTH OF THE TRAVELED-WAY.
2. FOR SPECIFIC REQUIREMENTS USE CHART ''A''.
3. IF THE DROP-OFF REQUIRES CHANNELIZING DEVICES TO REMAIN INPLACE OVERNIGHT THEN ''LOW SHOULDER'' OR "SHOULDER DROP OFF" SIGNS SHOULD BE INSTALLED.

CONDITION 2
DROP-OFF BETWEEN ADJACENT TRAVELLED LANES

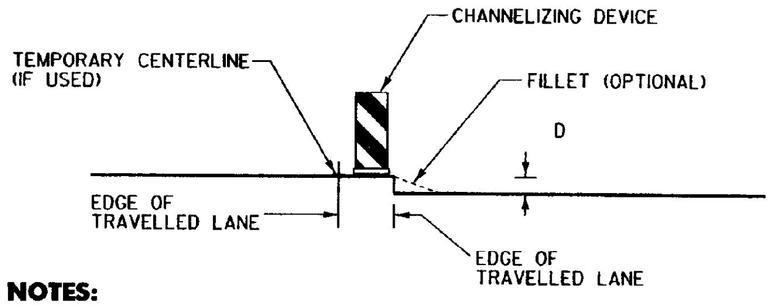

NOTES:

1. WHENEVER A LONGITUDINAL DROP-OFF BETWEEN ADJACENT TRAVELLED-LANES IS TO BE LEFT OVERNIGHT THEN ''UNEVEN LANES'' SIGNS AND CHANNELIZING DEVICES SHOULD BE INSTALLED.
2. IF REQUIRED, THE CHANNELIZING DEVICES USED SHOULD BE THOSE WHICH MAXIMIZE THE TRAVELLED LANE (IE. CONES, VERTICAL PANELS OR TUBULAR MARKERS).
3. A BITUMINOUS CONCRETE FILLET WITH A 3:1 SLOPE MAY BE USED IN LIEU OF CHANNELIZING DEVICES, HOWEVER THE ''UNEVEN LANES'' SIGNS SHOULD BE INSTALLED REGARDLESS.

CONDITION 3
DROP-OFF BEYOND SHOULDER OR CURB

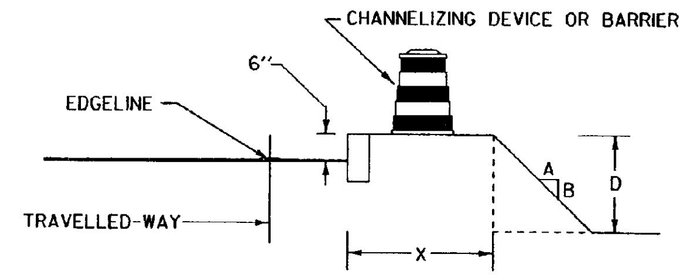

NOTES:

1. CHANNELIZING DEVICES OR BARRIER SHOULD BE PLACED TO MAXIMIZE THE WIDTH OF THE TRAVELLED WAY.
2. FOR SPECIFIC REQUIREMENTS USE CHART "A" OR "B" AS APPLICABLE.

CHART A
ALL SPEEDS
NO CURB

X (FEET)	DROP (D) (INCHES)	A/B SLOPE	DEVICE REQUIRED
0 TO 4'	LESS THAN 2''	ANY	NONE
	2'' TO 5''	3:1 OR FLATTER	NONE
		STEEPER THAN 3:1	CHANNELIZING DEVICE
	GREATER THAN 5''	3:1 OR FLATTER	NONE
		STEEPER THAN 3:1	BARRIER
4' TO 10'	LESS THAN 5''	ANY	NONE
	5'' TO 12''	3:1 OR FLATTER	NONE
		STEEPER THAN 3:1	BARRIER
	GREATER THAN 12''	3:1 OR FLATTER	NONE
		STEEPER THAN 3:1	BARRIER
10' TO CZ	LESS THAN OR EQUAL TO 12''	ANY	NONE
	GREATER THAN 12''	3:1 OR FLATTER	NONE
		STEEPER THAN 3:1	BARRIER

1. CLEAR ZONE (CZ) IS TO BE DETERMINED PER THE CURRENT AASHTO ROADSIDE DESIGN GUIDE.
2. CHANNELIZING DEVICES MAY BE USED INSTEAD OF BARRIER FOR SHORT TERM (ONE-DAY) OPERATIONS.
3. ON BORDERLINE CONDITIONS THE ENGINEER SHALL DETERMINE WHICH TREATMENT IS ADEQUATE FOR THE EXISTING CONDITIONS.

GENERAL NOTES

1. THESE CONDITIONS AND TREATMENTS ARE ONLY PART OF THE TRAFFIC CONTROL SYSTEM AND SHALL BE USED IN ADDITION TO THE PROPER WORK ZONE SIGNING.
2. THE FOLLOWING ARE ACCEPTABLE CHANNELIZING DEVICES: SEE STANDARD SHEETS E-106, E-107 AND E-107A FOR FURTHER DETAILS
   A. VERTICAL PANEL
   B. TYPE I OR TYPE II BARRICADE
   C. PLASTIC DRUM
   * D. CONE - WHERE APPLICABLE

   * CONES SHALL NOT BE USED WHEN THE CHANNELIZING DEVICE IS REQUIRED TO BE PLACED BELOW THE GRADE OF THE TRAVELLED-WAY. (SEE CONDITION 1, TYPE A)
3. WHERE BARRIER IS CALLED FOR, EITHER CONRETE BARRIER (JERSEY SHAPE), STEEL BEAM GUARDRAIL OR OTHER FHWA APPROVED BARRIER MAY BE USED.

   -BARRIER ENDS FACING ONCOMING TRAFFIC SHALL BE TAPERED BEYOND THE CLEAR ZONE OR PROTECTED WITH AN APPROVED END TREATMENT DESIGNED FOR THE 85TH PERCENTILE SPEED OR THE POSTED SPEED LIMIT OF THE ROADWAY.
4. CHANNELIZING DEVICE SPACING SHALL BE AS FOLLOWS:

   TAPERS - CHANNELIZING DEVICES SHALL BE SPACED A MAXIMUM OF 'S' (THE SPEED LIMIT IN FEET, 65 MPH = 65 FT) CENTER TO CENTER.

   TANGENT - CHANNELIZING DEVICES SHALL BE SPACED 'S' (THE SPEED LIMIT IN FEET, 65 MPH = 65 FT) TO A MAXIMUM OF '2S' CENTER TO CENTER.
5. ''LOW SHOULDER'' OR ''UNEVEN LANES'' SIGNS, WHEN USED, SHALL BEGIN PRIOR TO THE DROP-OFF CONDITION AND SHOULD BE REPEATED EVERY 1500 FEET.

CHART B
40 MPH OR LESS
WITH CURB

X (FEET)	DROP (D) (INCHES)	DEVICE REQUIRED
0-10'	LESS THAN OR EQUAL TO 12''	NONE
0-10'	GREATER THAN 12''	CHANNELIZING DEVICE
GREATER THAN 10	ANY	NONE

NOTES:

1. USE THIS CHART ONLY FOR CONDITION 3.
2. USE THIS CHART FOR VERTICAL CURBS OF 6'' OR GREATER FOR LOWER CURBS OR MOUNTABLE USE CHART A.
3. FOR CURBED SECTIONS WITH POSTED SPEEDS ABOVE 40 MPH USE CHART A.

OTHER STDS. REQUIRED: E-101, E-106, E-107, E-107A

REVISIONS AND CORRECTIONS

SEPT. 20, 1993 - DATE OF ORIGINAL ISSUE
AUG. 18, 1995 - ADDED SHOULDER WARNING NOTE

APPROVED FOR THIS PROJECT AND/OR DESIGN IMPLEMENTATION. FHWA FINAL APPROVAL PENDING.

APPROVED

DIRECTOR OF ENGINEERING

TRAFFIC AND SAFETY ENGINEER

CONSTRUCTION ZONE LONGITUDINAL DROP OFFS

/traf/std/stde108.dgn : stde108.i

VERMONT AGENCY OF TRANSPORTATION

STANDARD
E-108

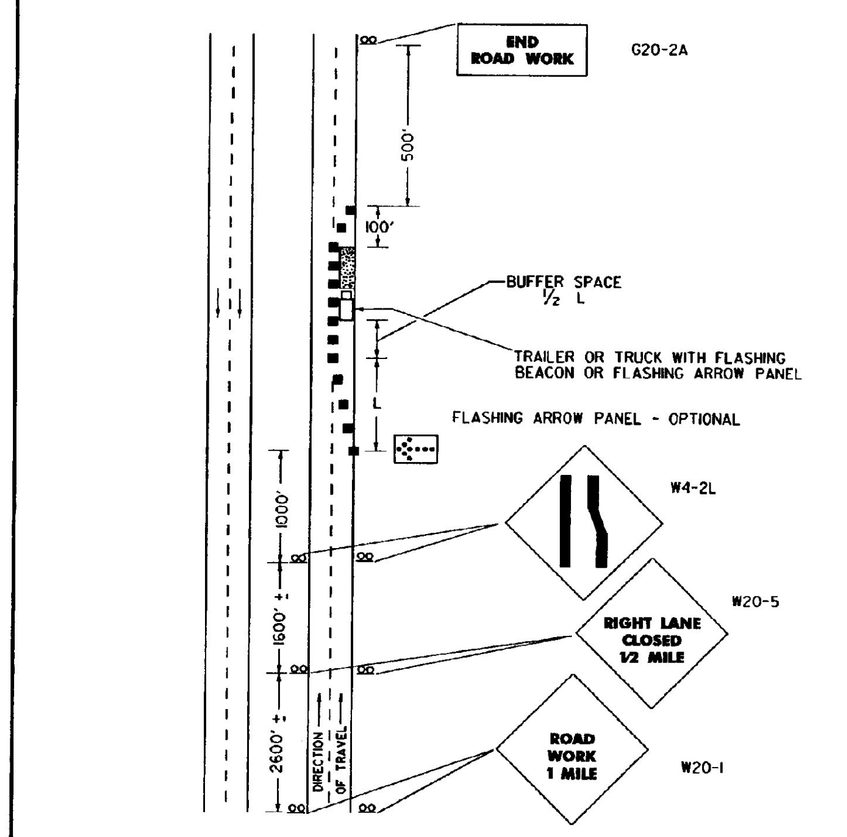

TYPICAL APPLICATION - DAYTIME MAINTENANCE OPERATIONS OF SHORT DURATION ON A 4-LANE DIVIDED ROADWAY WHERE HALF OF ROADWAY IS CLOSED.

NTS

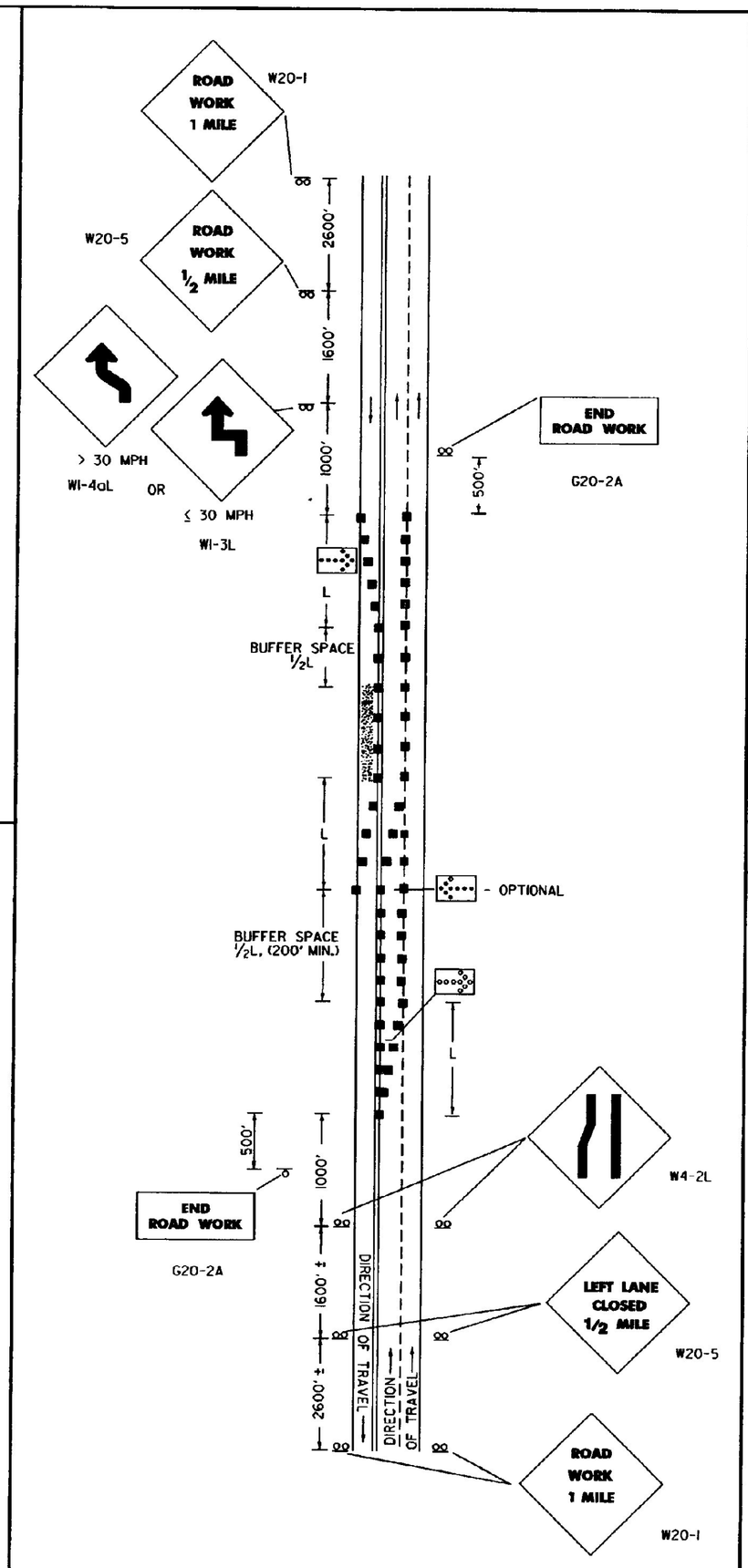

TYPICAL APPLICATION - DAYTIME MAINTENANCE OPERATION OF SHORT DURATION ON A 3 LANE ROADWAY WHERE CENTER LANE IS USED FOR OPPPOSING TRAFFIC

NTS

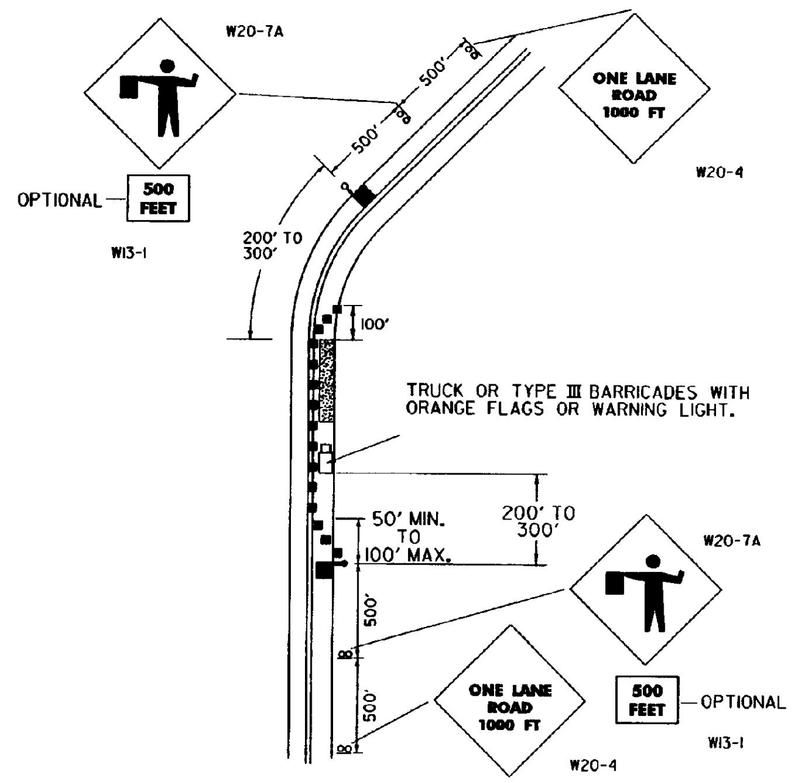

TYPICAL APPLICATIONS - DAYTIME MAINTENANCE OPERATIONS OF SHORT DURATION ON A 2-LANE ROADWAY WHERE FLAGGING IS PROVIDED

NTS

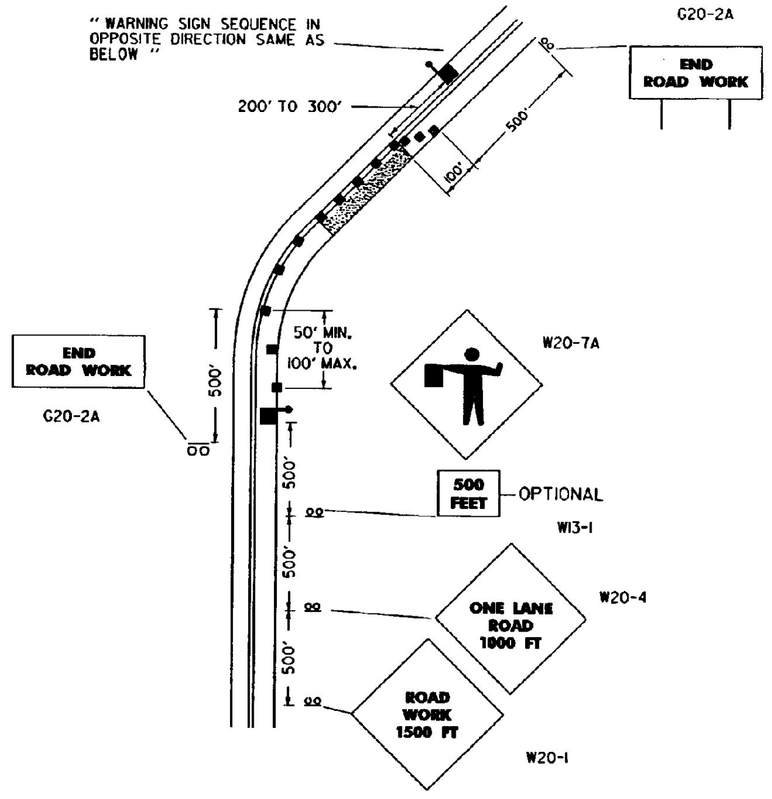

TYPICAL APPLICATIONS - TRAFFIC CONTROL DEVICES ON 2-LANE HIGHWAY WHERE ONE LANE IS CLOSED AND FLAGGING IS PROVIDED.

NTS

NOTES

REFLECTORIZATION

ALL SIGNS USED DURING THE HOURS OF DARKNESS SHALL BE REFLECTORIZED (TYPE II OR III). CONES USED FOR TRAFFIC CONTROL AT NIGHT SHALL COMPLY WITH STANDARD E-106.

COLORS

THE WARNING SIGNS SHOWN ON THIS SHEET SHALL HAVE BLACK TEXT, BORDER, AND SYMBOLS ON AN ORANGE BACKGROUND. THE TEXT AND BORDERS MAY BE SCREENED, LETTERING FILM, OR HAND PAINTED. THE ORANGE SHALL CONFORM WITH THE STANDARD COLORS ADOPTED BY THE AMERICAN ASSOCIATION OF STATE HIGHWAY AND TRANSPORTATION OFFICIALS AND APPROVED BY THE U.S. DEPARTMENT OF TRANSPORTATION, FEDERAL HIGHWAY ADMINISTRATION.

TEXT DESIGN

LETTERS, DIGITS, SPACING, AND TEXT DIMENSIONS SHALL CONFORM WITH THE ''STANDARD ALPHABETS FOR HIGHWAY SIGNS'' AS REFERENCED IN THE ''MANUAL ON UNIFORM TRAFFIC CONTROL DEVICES''.

SPECIFICATIONS

WARNING SIGNS SHALL MEET THE STANDARD STATE SPECIFICATIONS FOR TRAFFIC SIGNS.

SIGN BASE MATERIAL

THE SIGN BASE MATERIAL USED FOR THE WARNING SIGNS ON THIS SHEET MAY BE OF ANY OF THE FOLLOWING, WITH MINIMUM THICKNESS AS NOTED:

FLAT STEEL OR ALUMINUM	0.125 INCHES
HIGH DENSITY OVERLAYED PLYWOOD	1/2, 5/8, OR 3/4 INCHES
GALVANIZED SHEET STEEL	12 GAGE

1. SIGNS WITH ''ROAD WORK 1500 FT. AND ''END ROAD WORK'' TEXT SHALL BE USED WHEN THE WORK IS NOT COMPLETE AND A HAZARD REMAINS OVERNIGHT.
2. THE FLAGPERSON SHALL USE THE SIGN PADDLE DETAILED ON STANDARD SHEET E-102.
3. ALL SIGNS SHALL BE COVERED OR REMOVED AT THE END OF THE WORKING DAY UNLESS REQUIRED FOR THE PROTECTION AND SAFETY OF THE TRAVELING PUBLIC.
4. INSTALLATION: SIGNS AND BARRICADES SHALL BE IN PLACE PRIOR TO THE START OF THE MAINTENANCE OPERATION TO WHICH THEY APPLY AND SHALL BE REMOVED PROMPTLY WHEN THE NEED NO LONGER EXISTS. EACH SIGN SHALL BE ERECTED IN A NEAT AND WORKMANLIKE MANNER ON YIELDING WOOD OR METAL POSTS SET SECURELY IN THE GROUND (IN ACCORDANCE WITH STD. E-121), OR ON PORTABLE SUPPORTS WHEN APPROPRIATE. THE INSTALLATION OF SIGNS AND BARRICADES SHALL BE SUBJECT TO THE APPROVAL OF THE ENGINEER.
5. ALTHOUGH LISTED AS A MAINTENANCE OPERATION STANDARD SIGN SHEET, THE APPROACH SIGNS SHOWN SHALL BE USED BY CONTRACTORS WHEN WORKING WITHIN OR OUTSIDE PROJECT LIMITS.
6. ALL DISTANCES ARE DESIRABLE SPECIFICATIONS. FIELD CONDITIONS SHALL CONTROL THE ACTUAL PLACEMENT.
7. SIGN DETAILS NOT SHOWN ON THIS SHEET CAN BE FOUND ON STANDARD SHEETS E-100, E-101, AND E-102.
8. TAPER FORMULA
   L = SXW FOR SPEEDS OF 45 OR MORE
   L = $\frac{WS^2}{60}$ FOR SPEEDS OF 40 OR LESS
   WHERE
   L = MINIMUM LENGTH OF TAPER
   S = NUMERICAL VALUE OF POSTED SPEED LIMIT PRIOR TO WORK OR 85 PERCENTILE SPEED.
   W = WIDTH OF OFFSET.
9. THE MAXIMUM SPACING BETWEEN CHANNELIZING DEVICES IN A TAPER SHOULD BE APPROXIMATELY EQUAL IN FEET TO THE SPEED LIMIT IN M.P.H.. ON TANGENT SECTIONS THE MAXIMUM SPACING SHOULD BE APPROXIMATELY EQUAL TO TWICE THE POSTED SPEED LIMIT.
10. FLOOD LIGHTS SHOULD BE PROVIDED TO MARK THE FLAGPERSON STATIONS AT NIGHT AS NEEDED.
11. AT SHORT WORK ZONES WHERE ADEQUATE SIGHT DISTANCE IS AVAILABLE FOR THE SAFE HANDLING OF TRAFFIC ONE FLAGGER MAY BE USED WITH THE APPROVAL OF THE ENGINEER.
12. CHANNELIZING DEVICES SHALL BE EXTENDED TO A POINT WHERE THEY ARE VISIBLE TO APPROACHING TRAFFIC.
13. THE NUMBER OF CHANNELIZING AND OTHER TRAFFIC CONTROL DEVICES SHOWN ON THIS SHEET ARE FOR ILLUSTRATIVE PURPOSES ONLY. THE ACTUAL NUMBER REQUIRED SHALL BE DETERMINED BASED ON INDIVIDUAL DETOUR CONDITIONS (TAPERS, SPEED LIMITS, LENGTH OF DETOUR CURVE, ETC.).

LEGEND:

FLAGPERSON	WORK AREA
CHANNELIZING DEVICES (CONES OR DRUMS)	SIGN & POSTS
FLASHING ARROW PANEL	TYPE III BARRICADES

OTHER STDS. REQUIRED: E-100, E-101, E-102, E-106

REVISIONS AND CORRECTIONS

SEPT 10, 1987 - DATE OF ORIGINAL ISSUE
MAR 01, 1988 - FHWA REVIEW COMMENTS

SEP 20, 1993 - REVISED NOTES & MISC. DETAILS

AUG 08, 1995 - DELETED SIGN DETAILS

APPROVED FOR THIS PROJECT AND/OR DESIGN IMPLEMENTATION. FHWA FINAL APPROVAL PENDING.

APPROVED

Gordon D. MacArthur
DIRECTOR OF ENGINEERING

David A. Ross
TRAFFIC AND SAFETY ENGINEER

MAJOR MAINTENANCE OPERATION LANE CLOSURE

/traf/std/stdell0.dgn : stdell0.1

VERMONT AGENCY OF TRANSPORTATION

STANDARD
E-110

BEAM	MIN. GAGE	TENSILE STRENGTH (LBS.)	RAIL OR JOINT BEAM STRENGTH			
			TRAFFIC FACE UP		TRAFFIC FACE DOWN	
			LOAD (LBS.)	MAXIMUM DEFL. (INCHES)	LOAD (LBS.)	MAXIMUM DEFL. (INCHES)
STD.	12	80,000	L500 2,000	2" 3"	L200 L600	2" 3"
HEAVY DUTY	10	100,000	2,000 3,000	2" 3"	L600 2,400	2" 3"

STRENGTH - RAIL ELEMENT SHALL BE DESIGNED TO MEET THE REQUIREMENTS OF THE ABOVE TABLE. THE POST CONNECTION SHALL WITHSTAND A 5,000 POUND SIDE PULL IN EITHER DIRECTION. STANDARD STEEL BEAM TO BE 12 GAGE AND THE HEAVY DUTY TO BE 10 GAGE.

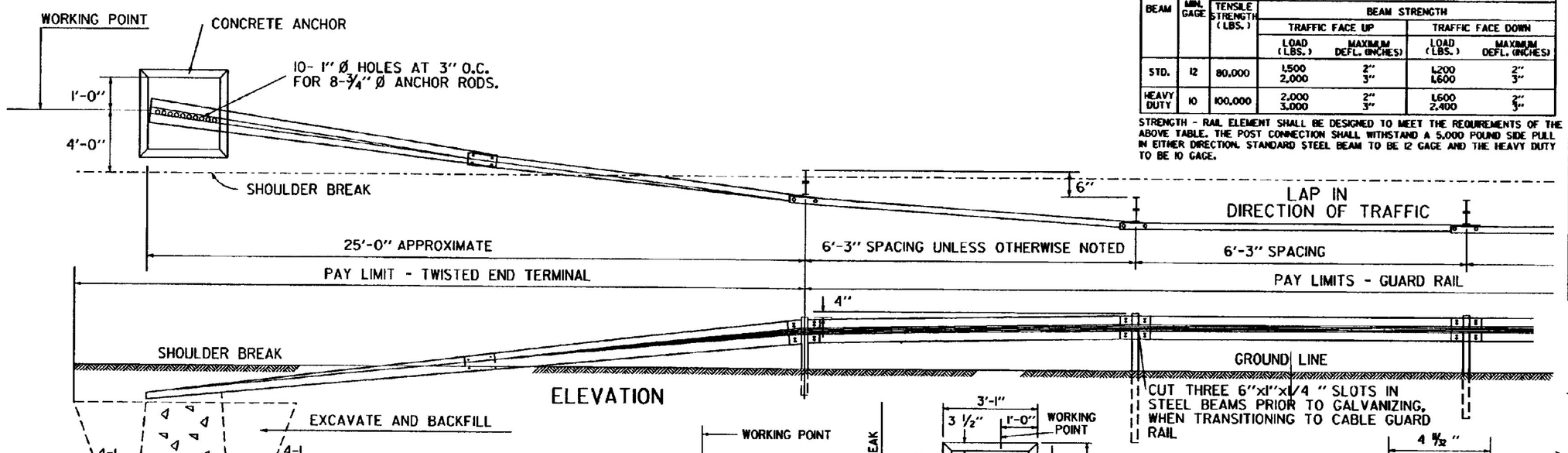

ELEVATION

CUT THREE 6"x1"x1/4" SLOTS IN STEEL BEAMS PRIOR TO GALVANIZING, WHEN TRANSITIONING TO CABLE GUARD RAIL

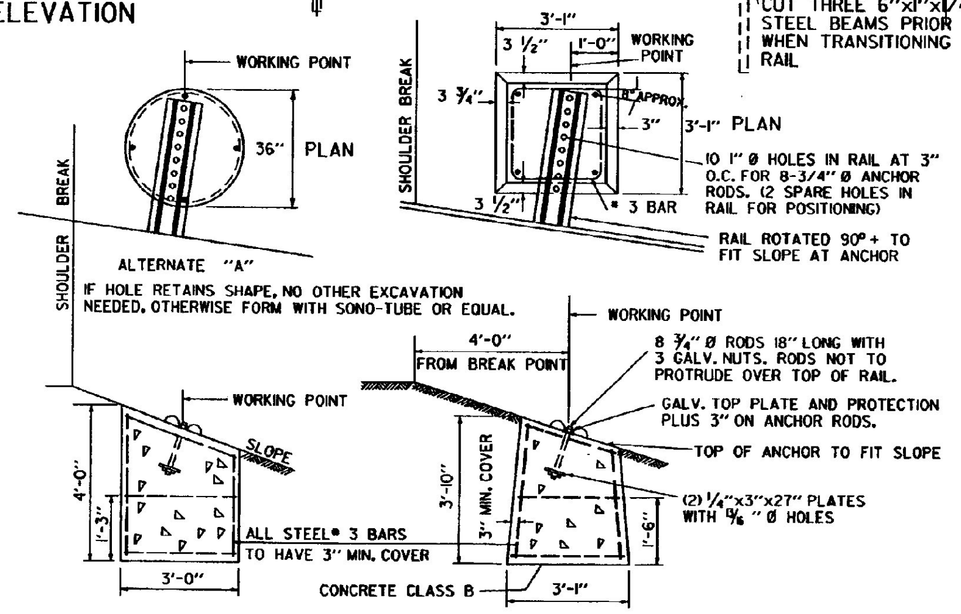

ELEVATIONS OF CONCRETE ANCHORS

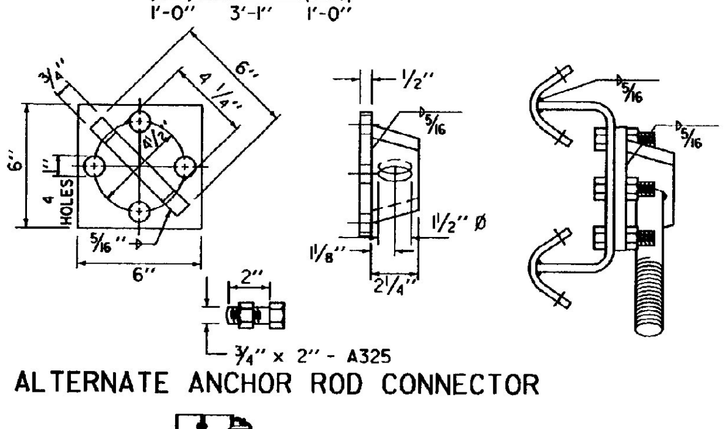

ALTERNATE ANCHOR ROD CONNECTOR

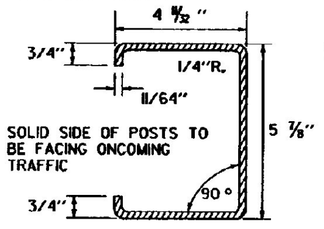

SOLID SIDE OF POSTS TO BE FACING ONCOMING TRAFFIC

ALL POSTS IN A GIVEN RUN OF BARRIER TO BE UNIFORM

ALTERNATE POST

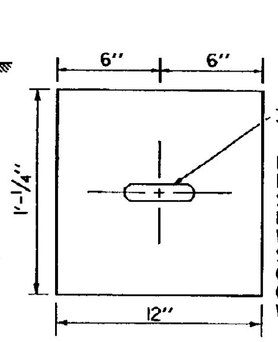

USE A 12" LONG FORMED BACK-UP PLATE OF STEEL BEAM GUARD RAIL AT EACH POST WHERE THERE IS A SINGLE THICKNESS OF BEAM RAIL. (NOT REQUIRED WITH WOOD POST SYSTEM).

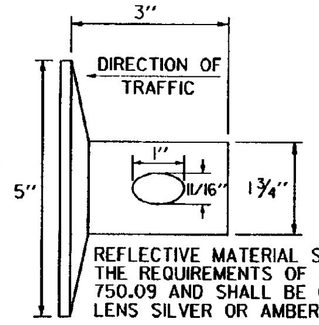

REFLECTIVE MATERIAL SHALL MEET THE REQUIREMENTS OF SUBSECTION 750.09 AND SHALL BE OF ENCAPSULATED LENS SILVER OR AMBER.

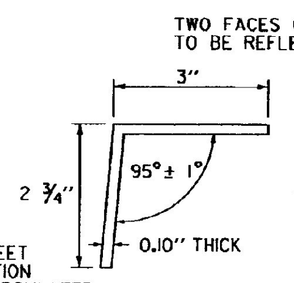

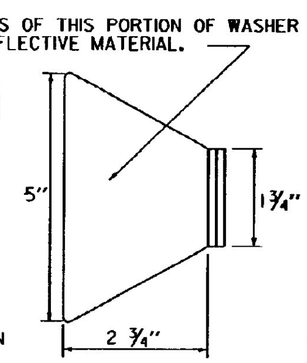

THIS REFLECTORIZED ALUMINUM WASHER IS TO BE PLACED IN VALLEY OF BEAM WHEN MOUNTING BEAM ONTO EACH FIFTH POST. WASHER SHALL MEET SPECIFICATION REQUIREMENTS FOR A.S.T.M. B-209 ALLOY 5052-H32

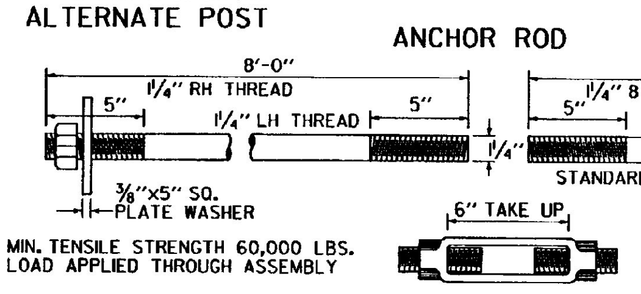

MIN. TENSILE STRENGTH 60,000 LBS. LOAD APPLIED THROUGH ASSEMBLY

TURNBUCKLE

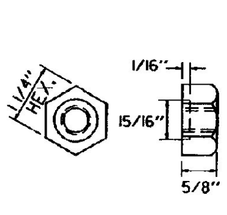

2" POST TO RAIL BOLT (1 1/2" THREAD LENGTH)

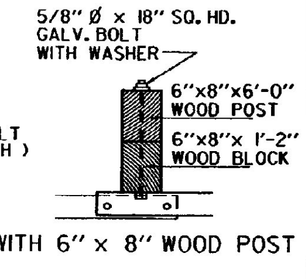

WITH 6" x 8" WOOD POST

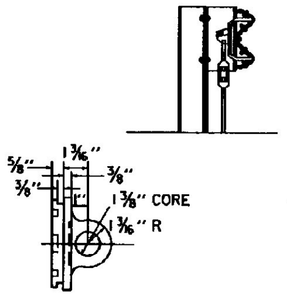

ANCHOR ROD CONNECTOR
(MALLEABLE IRON CASTING OR EQUAL)

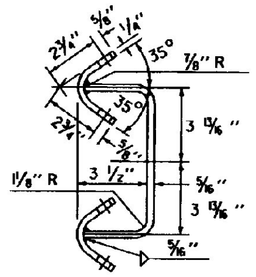

ANCHOR SPIDER
(WELDMENT)

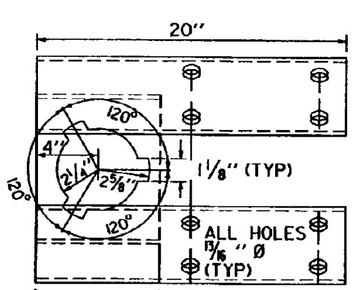

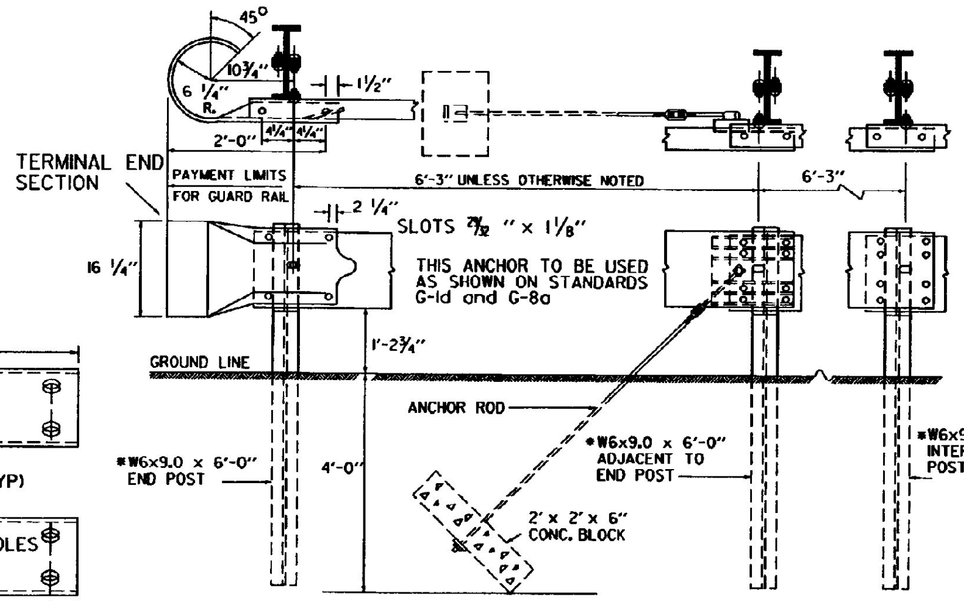

ANCHOR FOR STEEL BEAM RAIL
*W6x8.5 IS AN ACCEPTABLE ALTERNATE

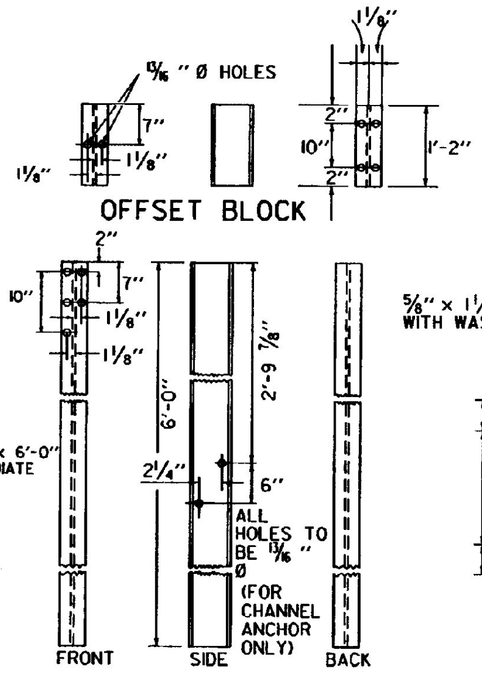

OFFSET BLOCK

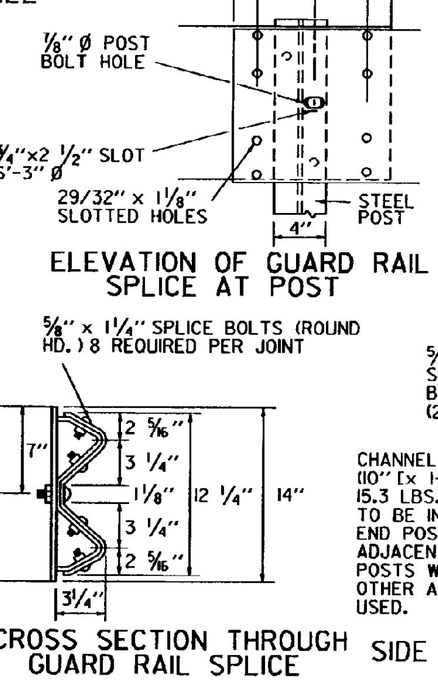

ELEVATION OF GUARD RAIL SPLICE AT POST

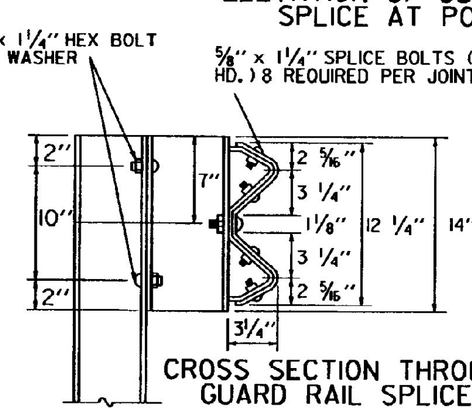

CROSS SECTION THROUGH GUARD RAIL SPLICE

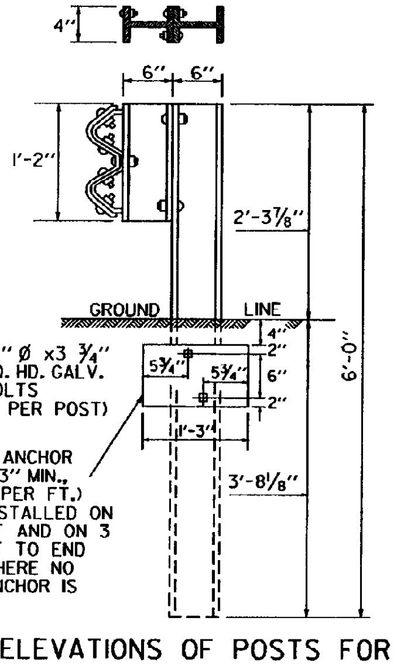

SIDE ELEVATIONS OF POSTS FOR SHOULDER INSTALLATION

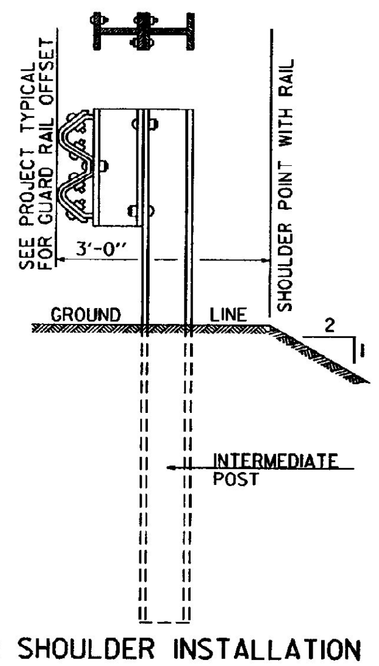

NOTE: CUT THREE SLOTS IN BEAM RAIL TO ALLOW CABLE GUARD RAIL TO PASS THROUGH

ONE WAY TRAFFIC

PLAN OF GUARD RAIL TRANSITION
BETWEEN STEEL BEAM GUARD RAIL AND THREE CABLE GUARD RAIL

REVISIONS AND CORRECTIONS

DEC. 8, 1971 - ORIGINAL APPROVAL DATE
APR. 10, 1972 - POST HEIGHT INCREASED
JAN. 17, 1978 - REVISED ANCHOR DETAIL
JUNE 1, 1978 - CHANNEL ANCHOR DETAILS CHANGED
MAY 28, 1979 - NOTE ON REFLECTIVE MATERIAL CHANGED
DEC. 18, 1980 - INCREASED SHOULDER WIDENING FOR GUARD RAIL
MAR. 12, 1984 - REVISED ANCHOR SPIDER DETAILS
JUNE 5, 1984 - POST SIZE AND BACK UP PLATE NOTE CHANGED
DEC. 21, 1984 - REMOVED POST WASHER
OCT. 31, 1985 - REVISED TO CONFORM TO 1986 SPECIFICATIONS
JUNE 1, 1994 - REISSUED, WITHOUT CHANGE, UNDER NEW SIGNATURES.

APPROVED

APPROVED FOR THIS PROJECT AND/OR DESIGN IMPLEMENTATION. FHWA FINAL APPROVAL PENDING.

Gordon D. MacArthur, P.E.
DIRECTOR OF ENGINEERING

John M. Murphy, PE
DESIGN ENGINEER

STEEL BEAM GUARD RAIL
HEAVY DUTY STEEL BEAM GUARD RAIL
TWISTED END TERMINAL
ANCHOR FOR STEEL BEAM RAIL

VERMONT AGENCY OF TRANSPORTATION

STANDARD
G-1

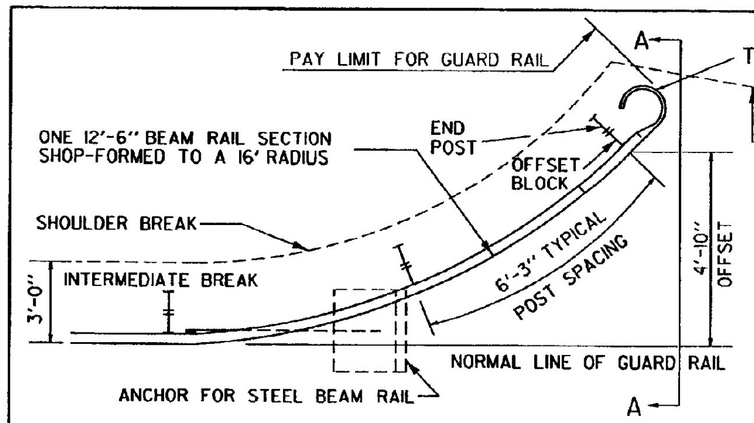

APPROACH END DETAIL
(NOT APPROVED FOR USE WHERE V > 40 MPH)

DIRECTION OF TRAFFIC

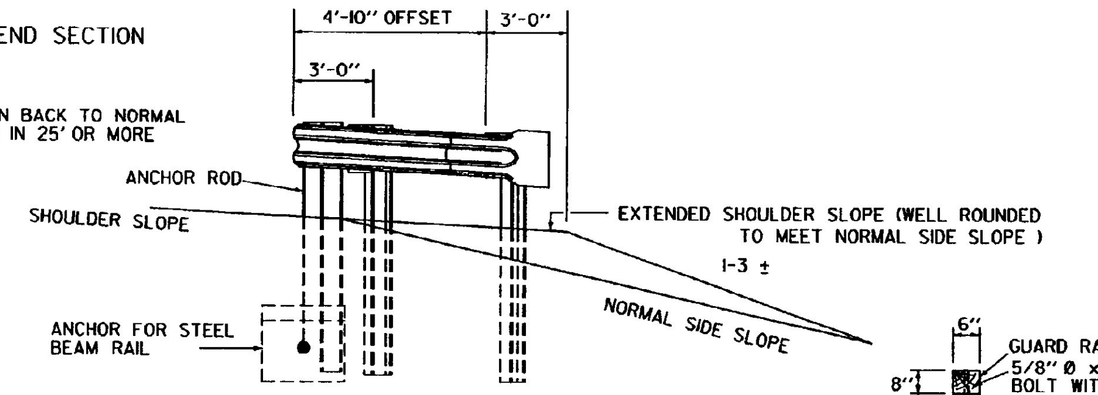

SECTION A-A

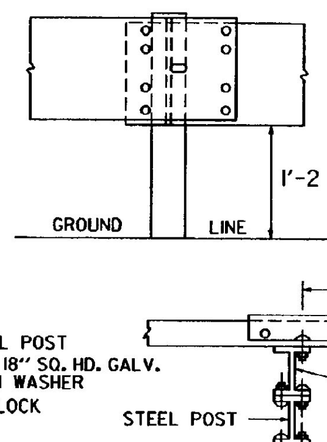

WITH 6" x 8 " WOOD POST

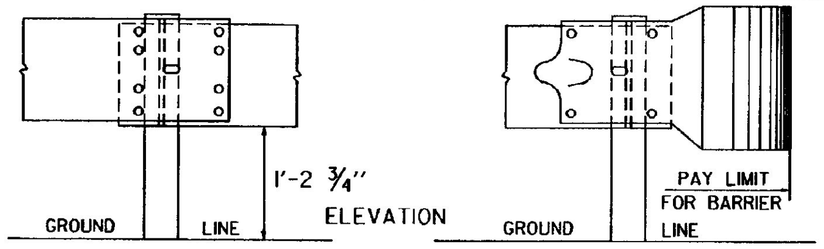

ELEVATION

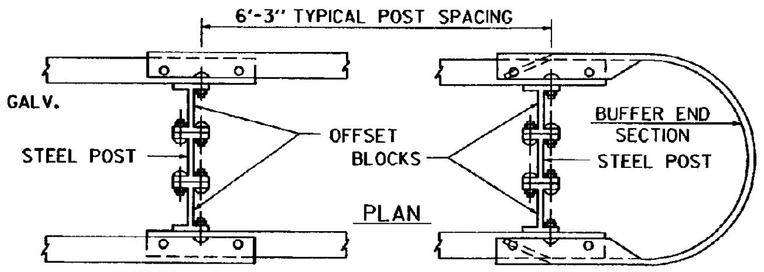

STEEL BEAM MEDIAN BARRIER

BARRIER END

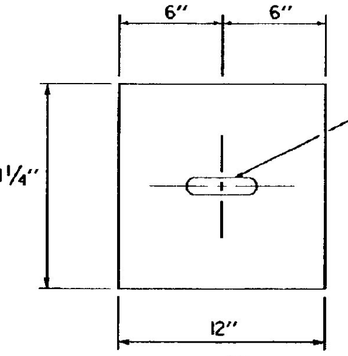

USE A 12" LONG FORMED BACK-UP PLATE OF STEEL BEAM GUARD RAIL AT EACH POST WHERE THERE IS A SINGLE THICKNESS OF BEAM RAIL. (NOT REQUIRED WITH WOOD POST SYSTEM).

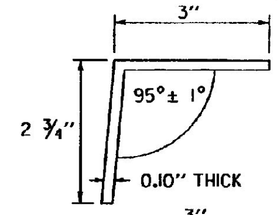

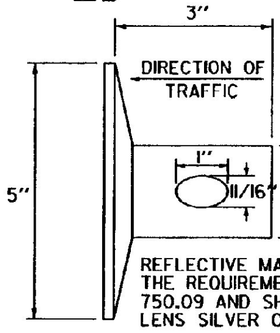

REFLECTIVE MATERIAL SHALL MEET THE REQUIREMENTS OF SUBSECTION 750.09 AND SHALL BE OF ENCAPSULATED LENS SILVER OR AMBER.

THIS REFLECTORIZED ALUMINUM WASHER IS TO BE PLACED IN VALLEY OF BEAM WHEN MOUNTING BEAM ONTO EACH FIFTH POST. WASHER SHALL MEET SPECIFICATION REQUIREMENTS FOR A.S.T.M. B-209 ALLOY 5052-H-32.

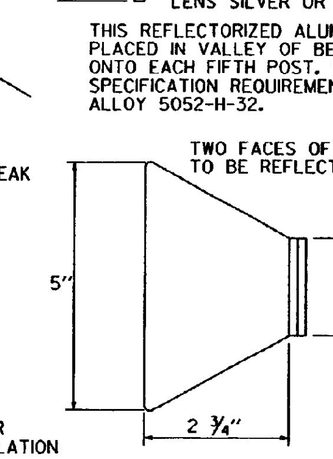

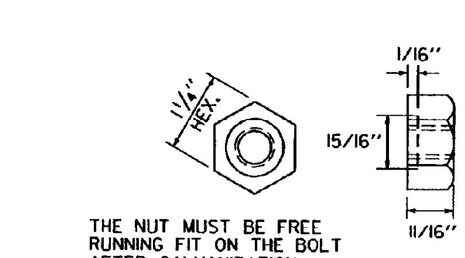

THE NUT MUST BE FREE RUNNING FIT ON THE BOLT AFTER GALVANIZATION.

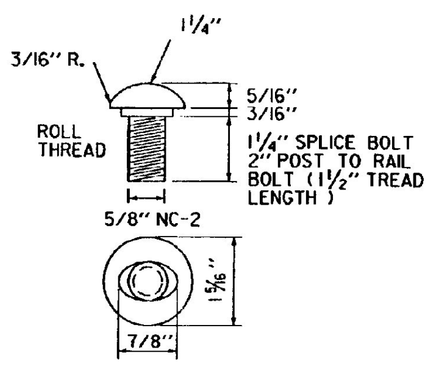

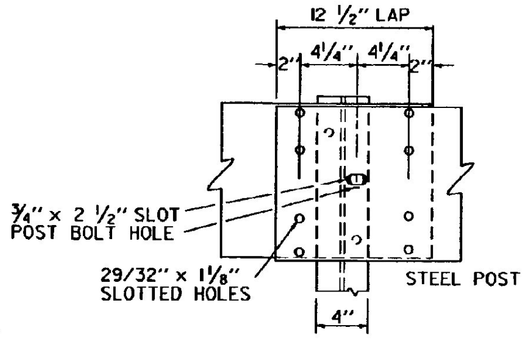

ELEVATION OF GUARD RAIL SPLICE AT POST

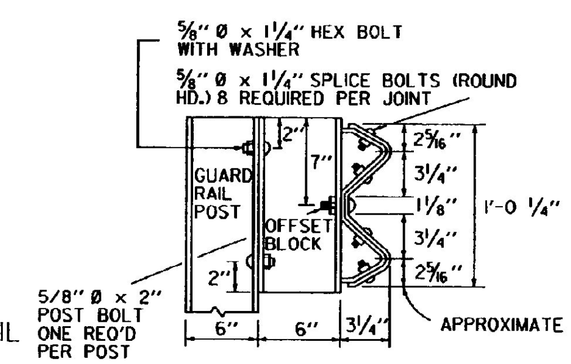

CROSS SECTION THROUGH GUARD RAIL SPLICE

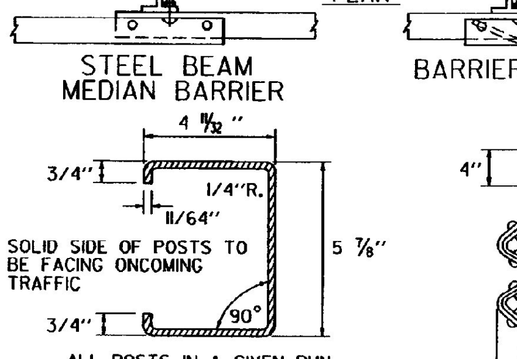

ALL POSTS IN A GIVEN RUN OF BARRIER TO BE UNIFORM

ALTERNATE POST

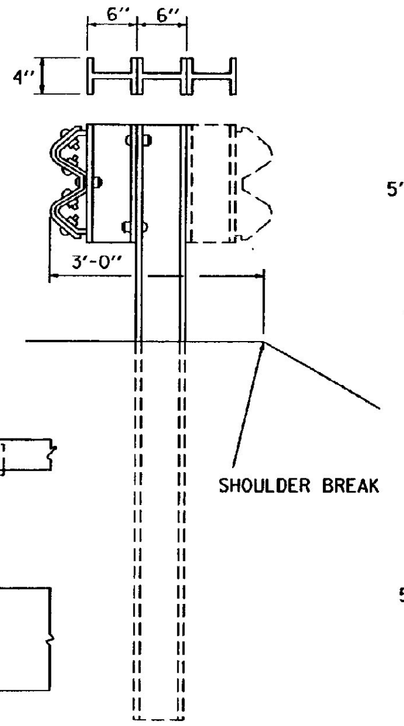

SIDE ELEVATION OF POST FOR SHOULDER OR MEDIAN INSTALLATION

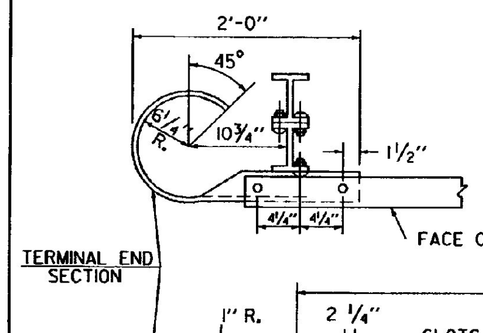

TERMINAL END SECTION

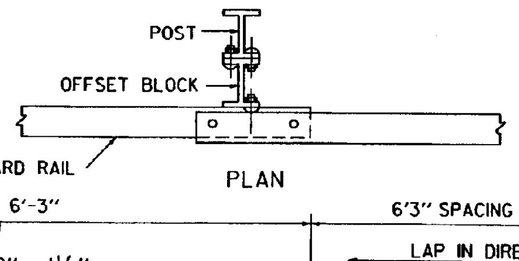

PLAN

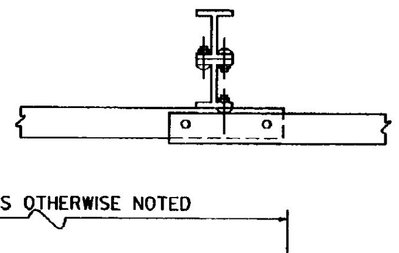

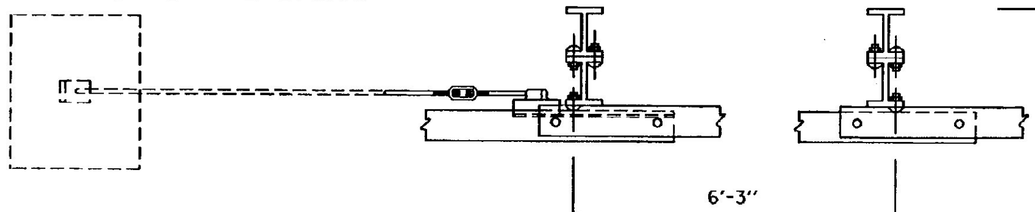

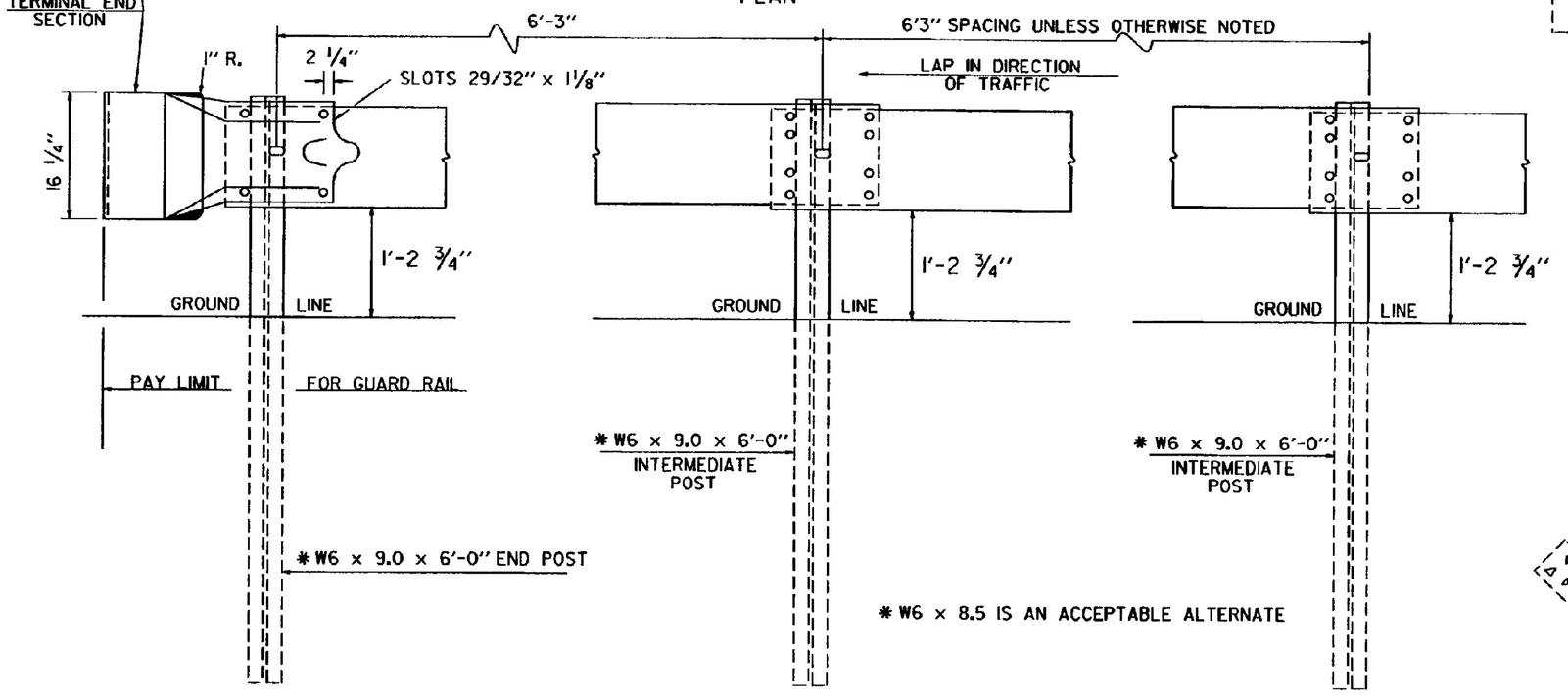

ASSEMBLY ELEVATION

STANDARD SHEET G-1 TO BE USED IN CONJUNCTION WITH THIS SHEET WHEN ANCHOR FOR STEEL BEAM GUARD RAIL IS REQUIRED.

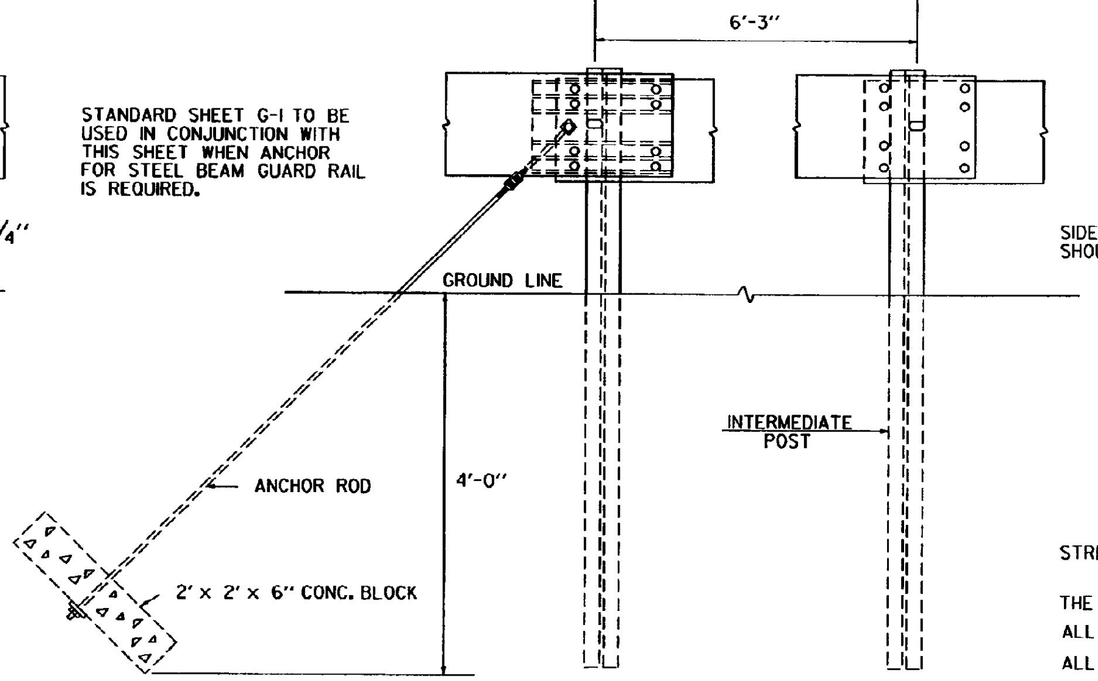

ANCHOR FOR STEEL BEAM RAIL

BEAM	MIN. GAGE	TENSILE STRENGTH (LBS.)	RAIL OR JOINT BEAM STRENGTH			
			TRAFFIC FACE UP		TRAFFIC FACE DOWN	
			LOAD (LBS.)	MAXIMUM DEF. (INCHES)	LOAD (LBS.)	MAXIMUM DEF. (INCHES)
STANDARD	12	80,000	1,500 2,000	2" 3"	1,200 1,600	2" 3"
HEAVY DUTY	10	100,000	2,000 3,000	2" 3"	1,600 2,400	2" 3"

STRENGTH - RAIL ELEMENT SHALL BE DESIGNED TO MEET THE REQUIREMENTS OF THE ABOVE TABLE.

THE POST CONNECTION SHALL WITHSTAND A 5,000 POUND SIDE PULL IN EITHER DIRECTION.

ALL METAL PARTS SHALL BE GALVANIZED.

ALL WOOD POSTS SHALL BE GIVEN A PRESERVATIVE TREATMENT.

STANDARD STEEL BEAM TO BE 12 GAGE AND THE HEAVY DUTY TO BE 10 GAGE.

REVISIONS AND CORRECTIONS

MAY 6, 1976 - ORIGINAL APPROVAL DATE
SEP. 10, 1976 - MINIMUM LENGTH & ADVANCE OF NEED NOTES REMOVED
MAR. 2, 1977 - ROUND WOOD POSTS REMOVED
SEPT. 12, 1977 - REFERENCE TO ROUND WOOD POSTS REMOVED
MAY 29, 1979 - NOTE ON REFLECTIVE MATERIAL CHANGED
APRIL 28, 1980 - APPROACH END DETAILS REDRAWN
DEC. 16, 1980 - INCREASED SHOULDER WIDENING FOR GUARD RAIL
JUNE 5, 1984 - POST SIZE AND BACK UP PLATE NOTE CHANGED
DEC. 21, 1984 - REMOVED POST WASHER
OCT. 31, 1985 - REVISED TO CONFORM TO 1986 SPECIFICATIONS
JUNE 1, 1994 - REISSUED, WITHOUT CHANGE. UNDER NEW SIGNATURES.

APPROVED

APPROVED FOR THIS PROJECT AND/OR DESIGN IMPLEMENTATION. FHWA FINAL APPROVAL PENDING.

Gordon B. MacArthur P.E.
DIRECTOR OF ENGINEERING

John M. Murphy P.E.
DESIGN ENGINEER

STEEL BEAM GUARD RAIL
HEAVY DUTY STEEL BEAM GUARD RAIL
STEEL BEAM MEDIAN BARRIER
ANCHOR FOR STEEL BEAM RAIL

VERMONT AGENCY OF TRANSPORTATION

STANDARD
G-1d

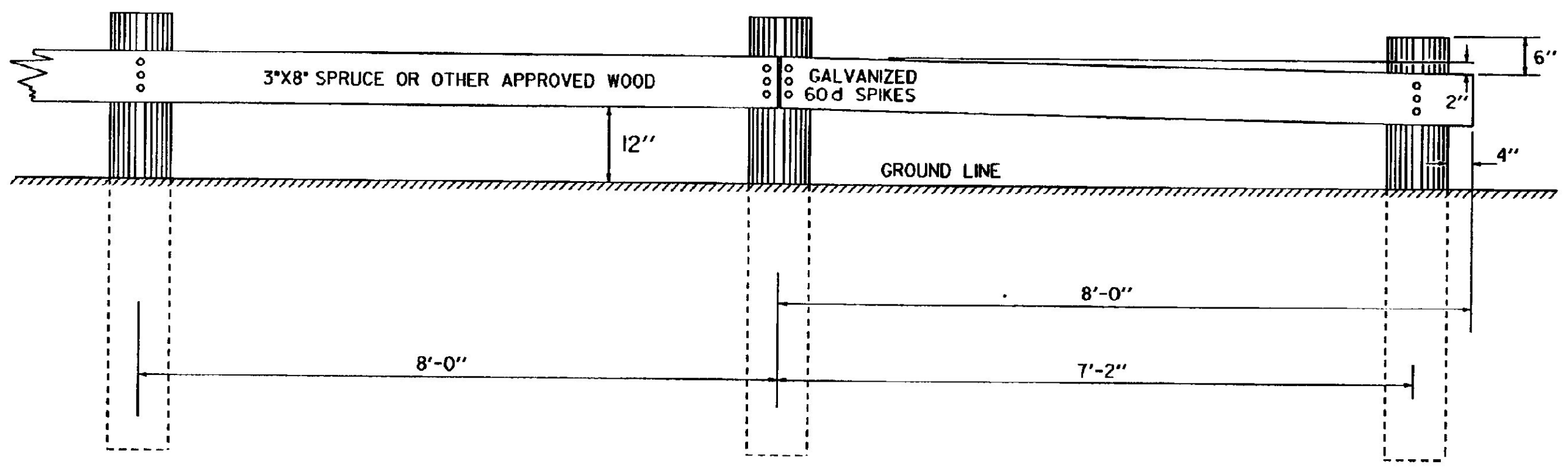

PLANK SIXTEEN FEET IN LENGTH TO BE USED WHEREVER POSSIBLE.
POSTS SIX (6) INCHES SQUARE MAY BE USED IN PLACE OF ROUND POSTS.
FIRST AND LAST POSTS OF EACH SECTION TO BE SET BACK TWELVE INCHES FROM THE GENERAL LINE OF POSTS, WHEN FOUR OR MORE POSTS ARE REQUIRED.
REFLECTIVE MATERIAL TO BE PLACED AS DIRECTED BY THE ENGINEER.
ALL WOOD MEMBERS SHALL BE GIVEN A PRESERATIVE TREATMENT.

PLANK RAIL

TO BE USED AS A BARRICADE OFF THE HIGHWAY

NOTCH TO BE TREATED WITH PRESERVATIVE BEFORE ERECTING PLANK.

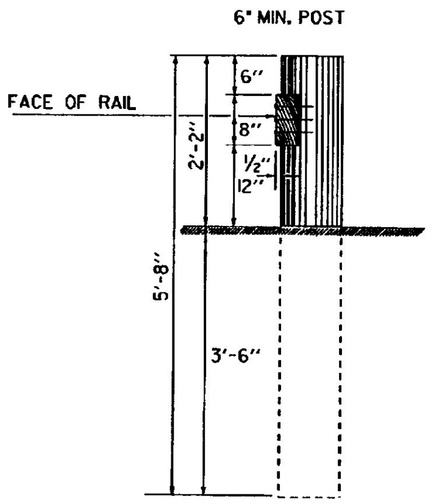

3" X 1½" REFLECTIVE ALUMINUM STRIP TO BE PLACED ON EVERY OTHER WOOD POST IN A LINE OF POSTS AND CLEARLY VISIBLE TO APPROACHING TRAFFIC.
STRIPS TO BE ATTACHED TO THE DESIGNATED RAIL POSTS ON BOTH SIDES OF THE ROAD AND VISIBLE TO TRAFFIC IN BOTH DIRECTIONS.

REFLECTIVE MATERIAL SHALL MEET THE REQUIREMENTS OF SUBSECTION 750.09 AND SHALL BE OF ENCAPSULATED LENS SILVER OR AMBER.

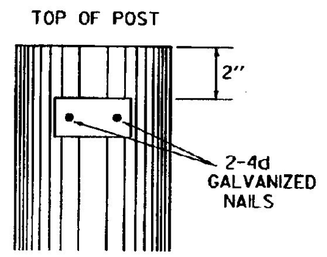

DELINEATION OF WOOD RAIL AND GUIDE POSTS

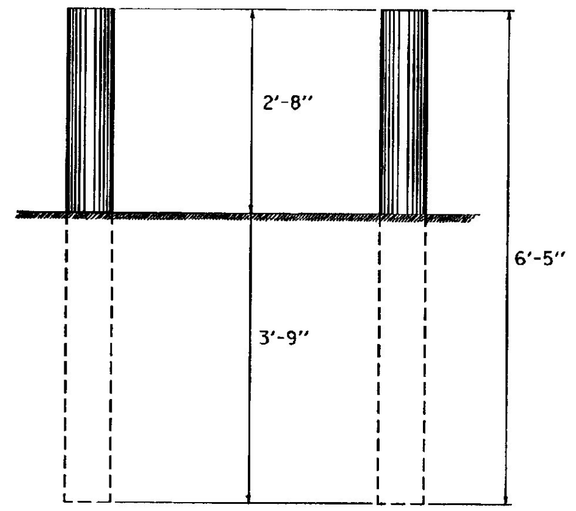

MARKER POSTS ARE TO BE 4" TO 5½" IN DIAMETER AND ARE TO BE PLACED AS DIRECTED BY THE ENGINEER. POSTS SHALL BE GIVEN A PRESERVATIVE TREATMENT.

WOOD MARKER POSTS

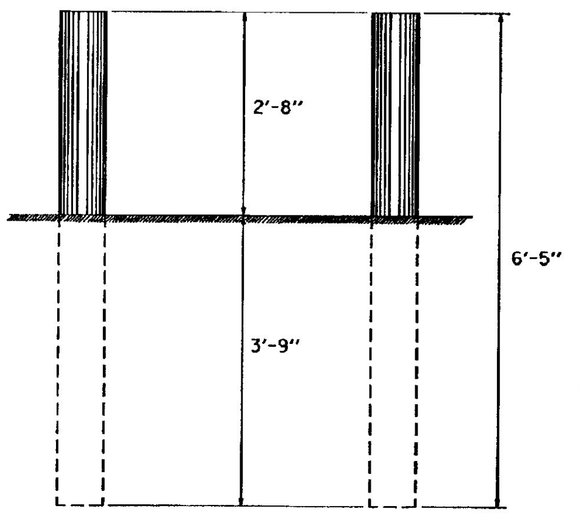

REFLECTIVE MATERIAL TO BE PLACED AS DIRECTED BY THE ENGINEER.

POSTS ARE TO BE 4" TO 5½" IN DIAMETER AND ARE TO BE PLACED AS DIRECTED BY THE ENGINEER. POSTS SHALL BE GIVEN A PRESERVATIVE TREATMENT

WOOD GUIDE POSTS

ENTRANCE THROUGH PLANK RAIL

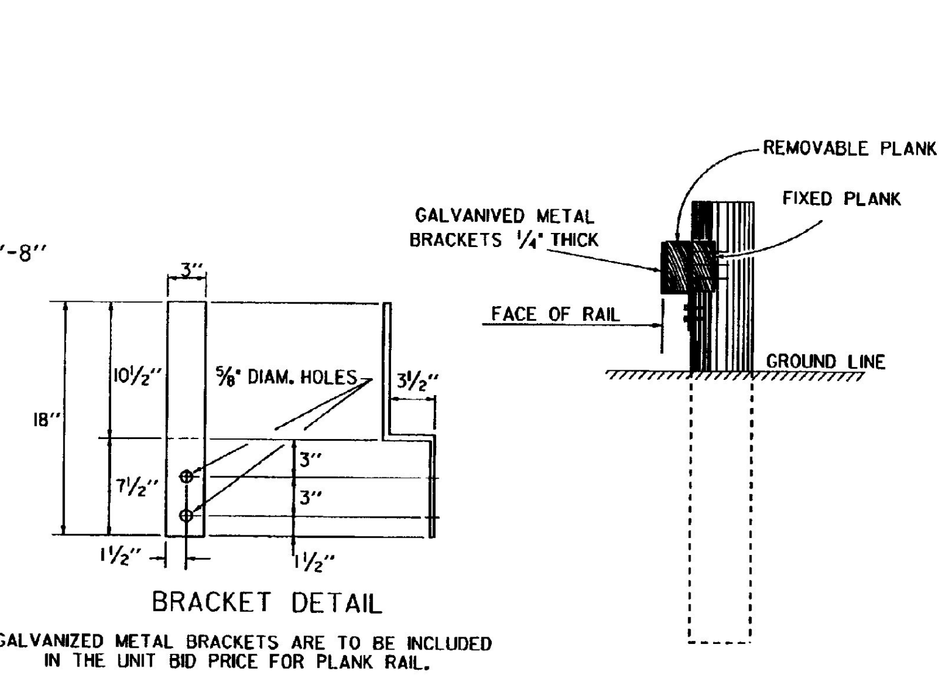

BRACKET DETAIL

GALVANIZED METAL BRACKETS ARE TO BE INCLUDED IN THE UNIT BID PRICE FOR PLANK RAIL.

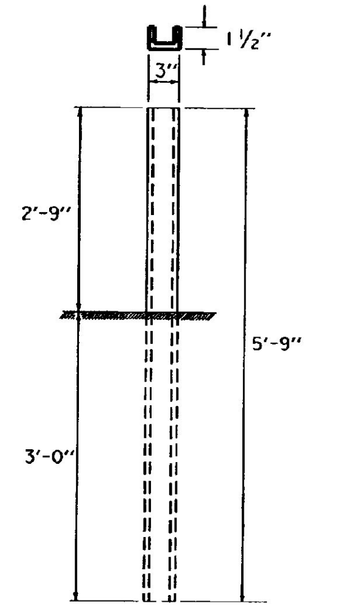

ALL STEEL MARKER POSTS TO BE GALVANIZED.
STEEL MARKER POSTS TO BE PLACED AS DIRECTED BY THE ENGINEER.

POSTS ARE TO BE AMERICAN STANDARD CHANNEL 5'-9" X 3". (4.1 LBS. PER FT.)

STEEL MARKER POSTS

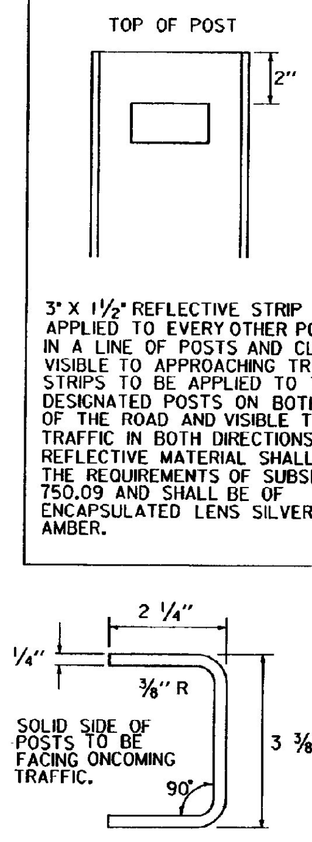

ALTERNATE POST

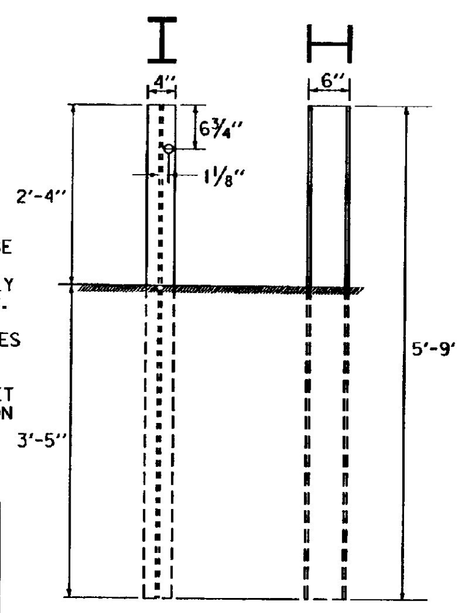

ALL STEEL GUIDE POSTS TO BE GALVANIZED.
REFLECTIVE MATERIAL TO BE PLACED AS DIRECTED BY THE ENGINEER.
POSTS ARE TO BE 5'-9" X 6" X 4" (8.5 LBS. PER FT.).

ALL POSTS IN A GIVEN RUN OF BARRIER TO BE UNIFORM.

STEEL GUIDE POSTS

REVISIONS AND CORRECTIONS
- DEC. 8, 1971 - ORIGINAL APPROVAL DATE
- MAY 23, 1974 - ALTERNATE POST ADDED
- MAY 29, 1979 - NOTE ON REFLECTIVE MATERIAL CHANGED
- JULY 23, 1980 - CHANGED DIAMETER OF WOOD MARKER POST & WOOD GUIDE POST
- MAY 25, 1982 - REMOVED ALTERNATE POST DETAIL
- OCT. 31, 1985 - REVISED TO CONFORM TO 1986 SPECIFICATIONS
- JUNE 1, 1994 - REISSUED, WITHOUT CHANGE, UNDER NEW SIGNATURES.

APPROVED

APPROVED FOR THIS PROJECT AND/OR DESIGN IMPLEMENTATION. FHWA FINAL APPROVAL PENDING.

Gordon R. MacArthur, P.E.
DIRECTOR OF ENGINEERING

John M. Murphy, P.E.
DESIGN ENGINEER

PLANK RAIL
GUIDE POSTS
WOOD MARKER POSTS
STEEL MARKER POSTS

VERMONT AGENCY OF TRANSPORTATION

STANDARD
G-4

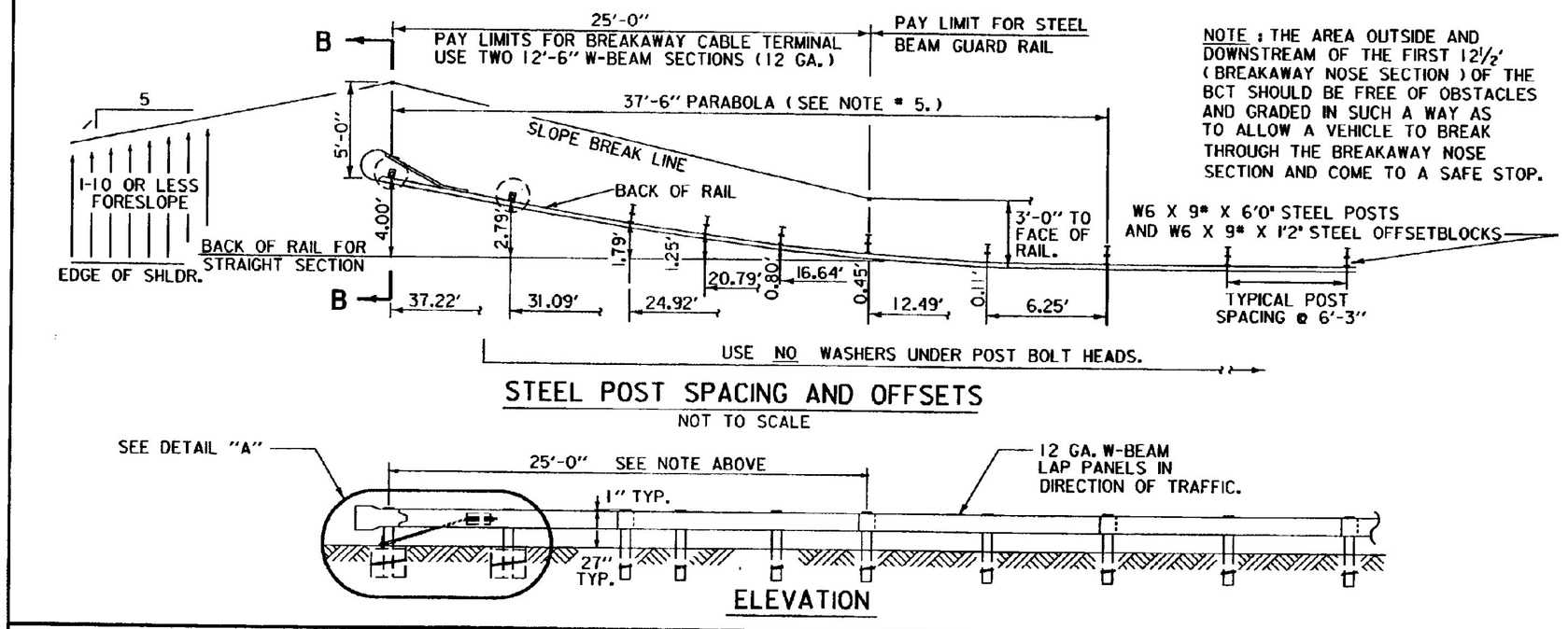

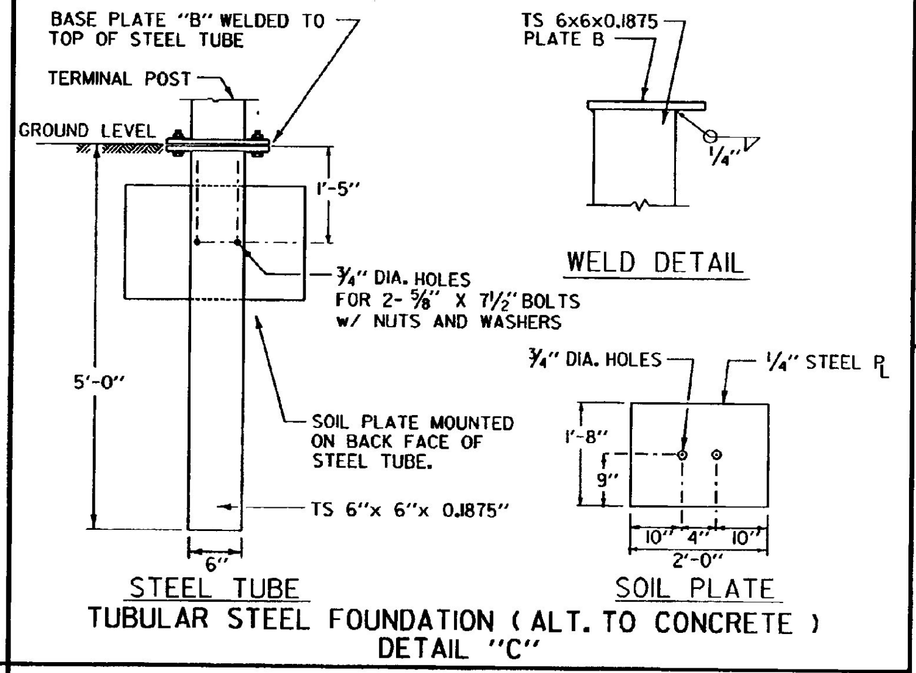

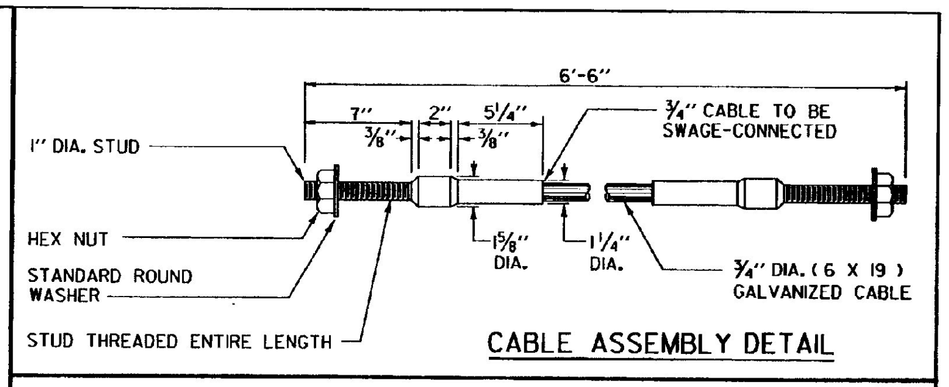

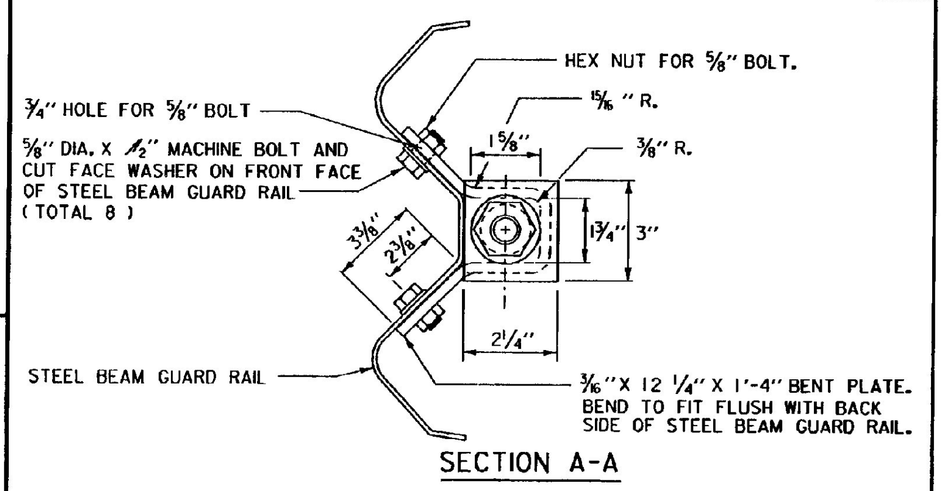

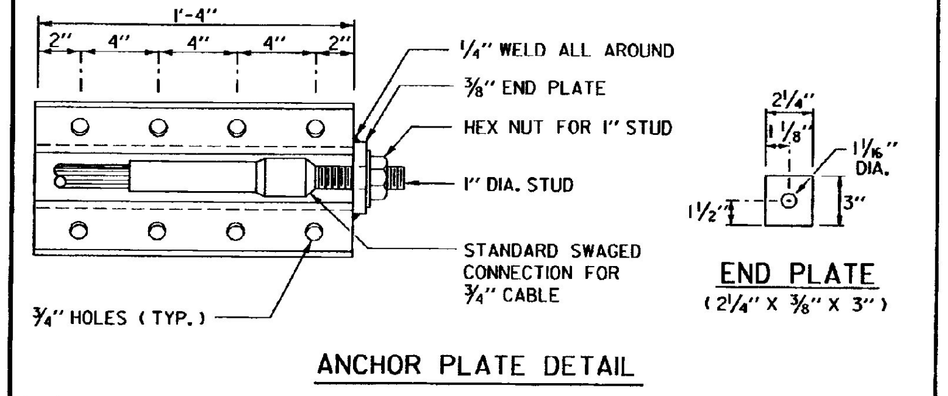

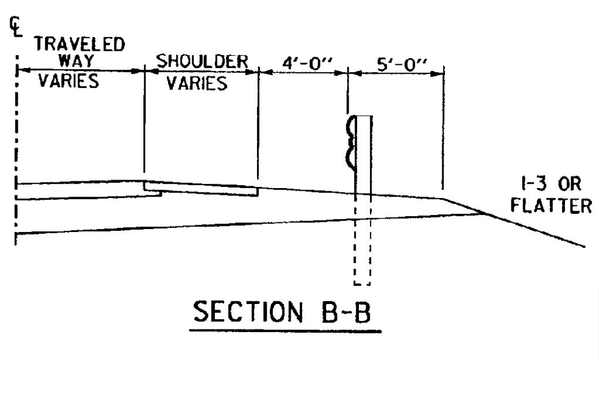

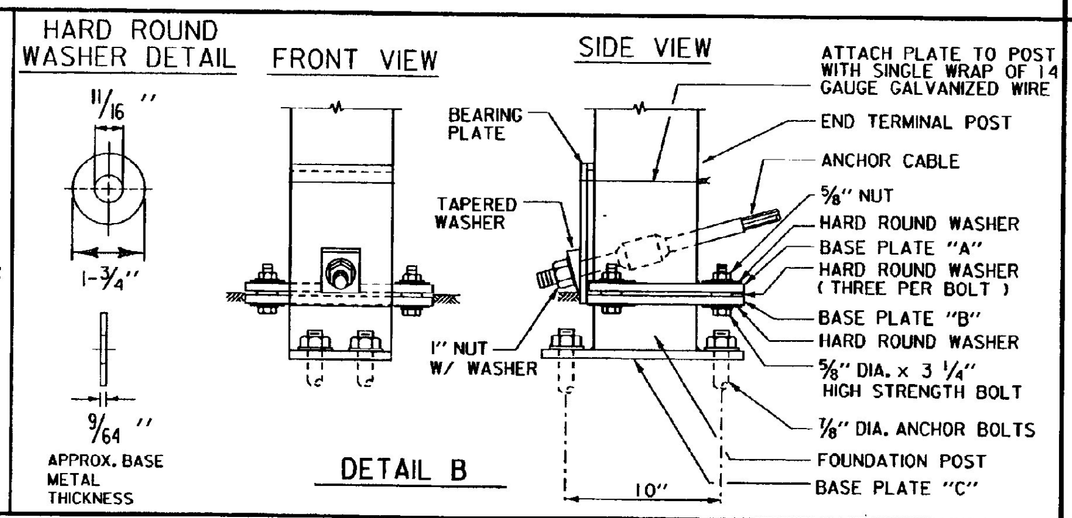

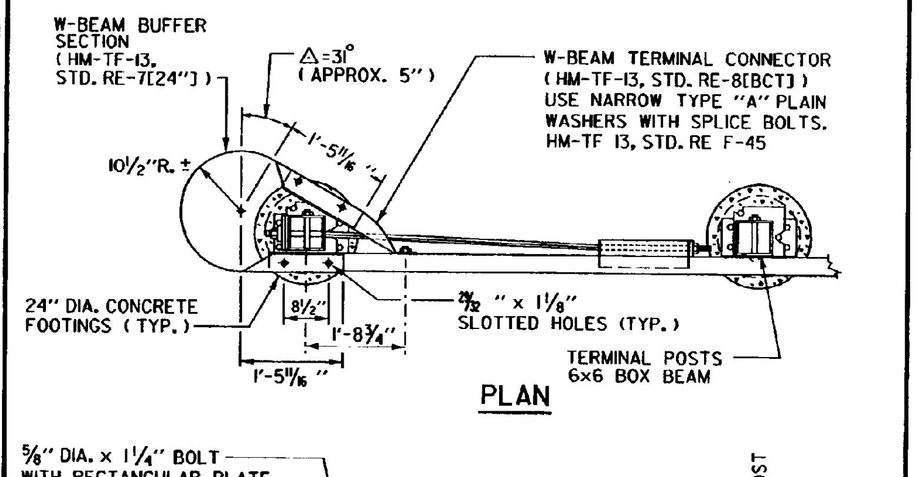

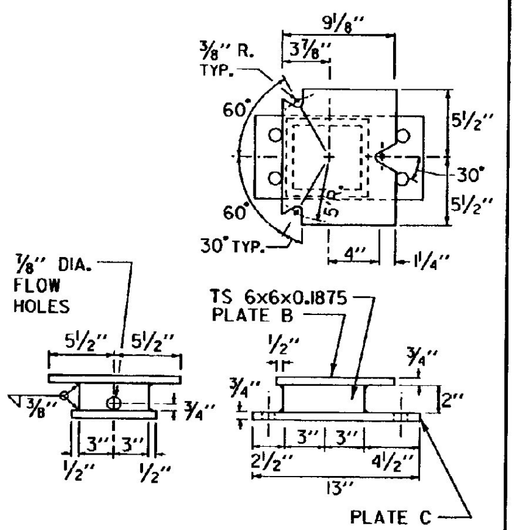

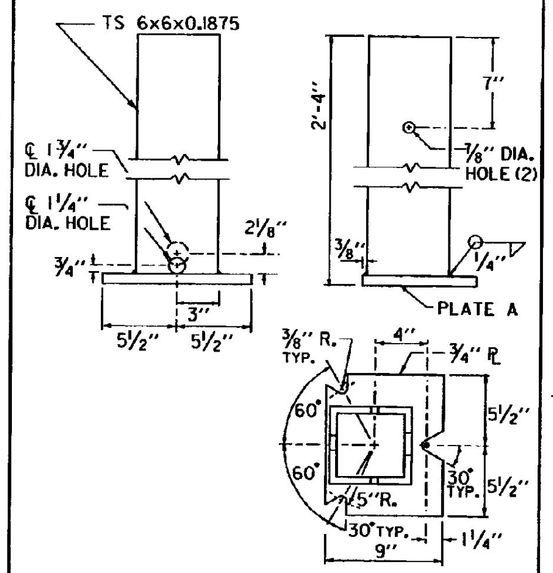

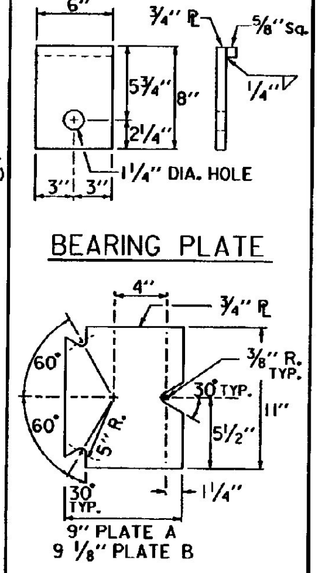

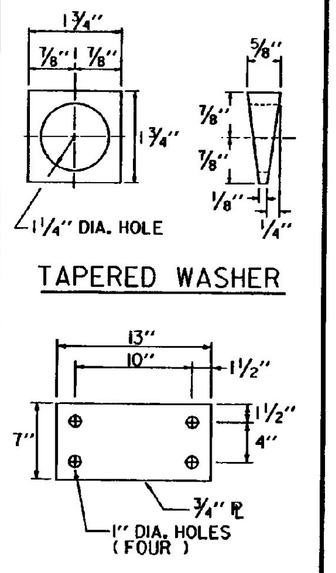

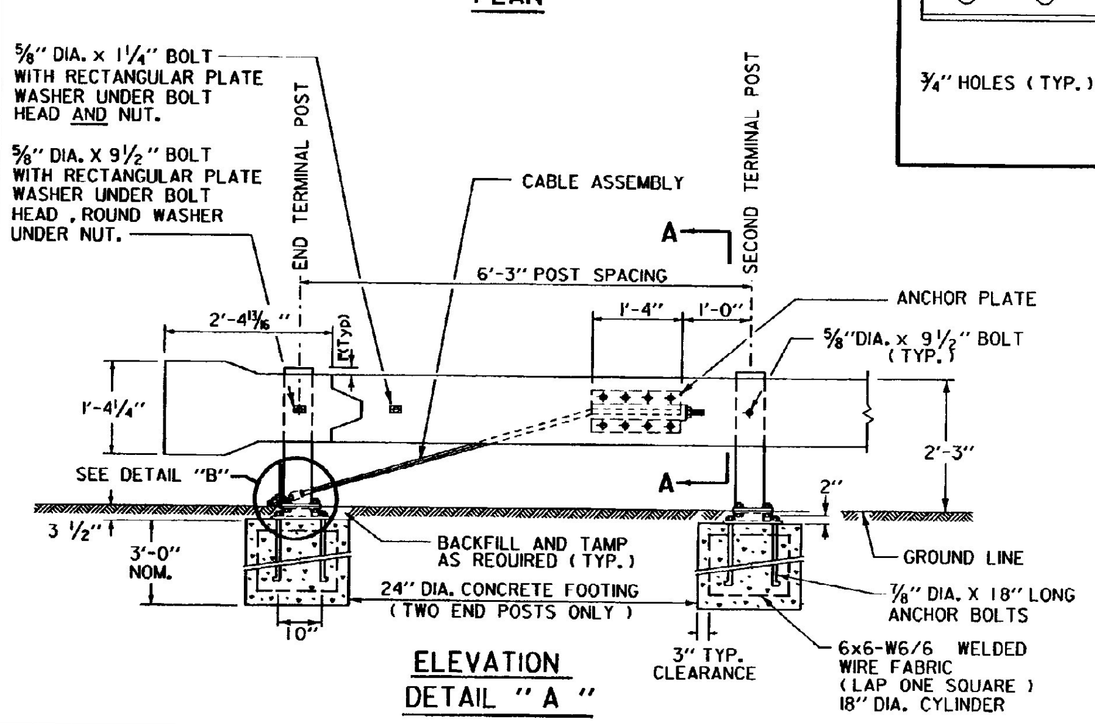

NOTES

1. OTHER ANCHOR CABLE ASSEMBLIES MAY BE USED. MINIMUM BREAKING STRENGTH OF ASSEMBLY SHALL BE 40,000 LBS.
2. CONCRETE FOR FOOTINGS SHALL BE CLASS B. TUBULAR STEEL FOUNDATION MAY BE USED AS AN ALTERNATIVE TO CONCRETE FOOTINGS. (SEE DETAIL "C")
3. FOR CONCRETE FOOTINGS IN SANDY AREAS, CONSIDERATION FOR INCREASING THE SIZE OF THE FOOTING IS SUGGESTED.
4. THE SLIP BASE SHALL BE CONTROLLED BY THE USE OF NUTS WITH A BUILT-IN TORQUE OR BY A TORQUE WRENCH CAPABLE OF ESTABLISHING A TORQUE OF 155 TO 170 FT-LBS.
5. STANDARD SHEET G-1 WILL BE USED IN CONJUNCTION WITH THIS STANDARD.
6. USE 12" LONG W-BEAM BACK-UP PLATE AT POSTS WHERE W-BEAM SPLICE DOES NOT OCCUR.
7. FOR ADDITIONAL DETAILS ON HARDWARE, SEE THE LATEST EDITION OF AASHTO-AGC-ARTBA PUBLICATION "A GUIDE TO STANDARDIZED HIGHWAY BARRIER RAIL HARDWARE".

REVISIONS AND CORRECTIONS

JULY 15, 1976 - ORIGINAL APPROVAL DATE
NOV. 13, 1989 - REMOVED NOTE ABOUT FLAT PLATE WASHERS
APR. 4, 1990 - ADDED DETAIL FOR HARD ROUND WASHER
JUNE 1, 1994 - REISSUED, WITHOUT CHANGE, UNDER NEW SIGNATURES.

APPROVED

APPROVED FOR THIS PROJECT AND/OR DESIGN IMPLEMENTATION. FHWA FINAL APPROVAL PENDING.

Gordon D. MacArthur, P.E.
DIRECTOR OF ENGINEERING

Robert M. Murphy, P.E.
DESIGN ENGINEER

NOT TO SCALE

BREAKAWAY CABLE TERMINAL WITH STEEL POSTS

VERMONT AGENCY OF TRANSPORTATION

STANDARD
G-15

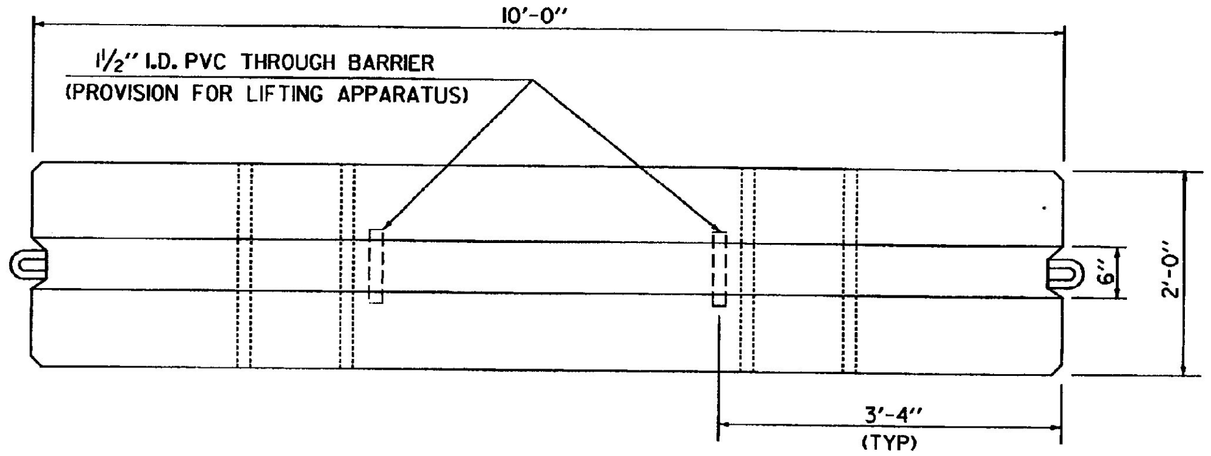

PLAN

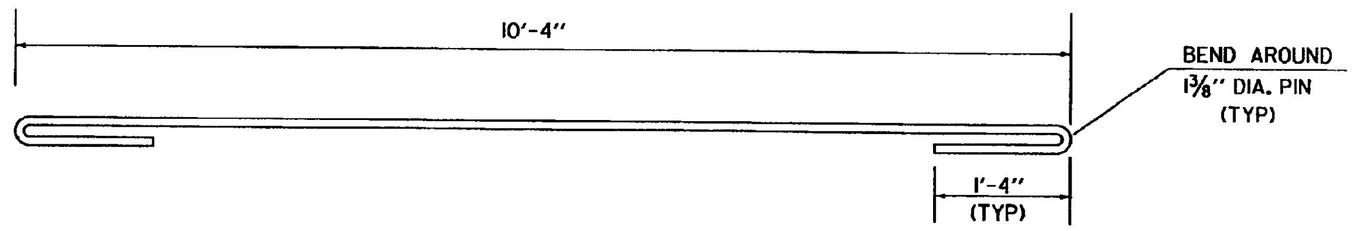

CONNECTION BAR DETAIL

#5 REBAR

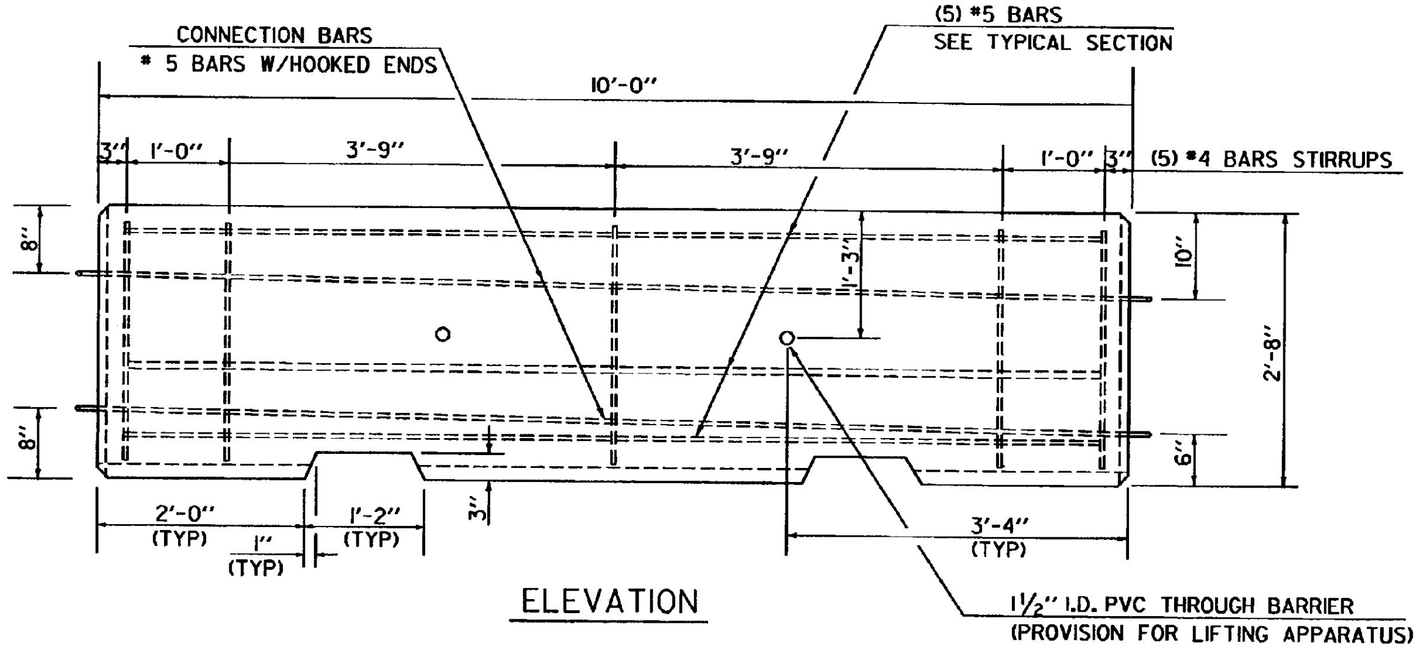

ELEVATION

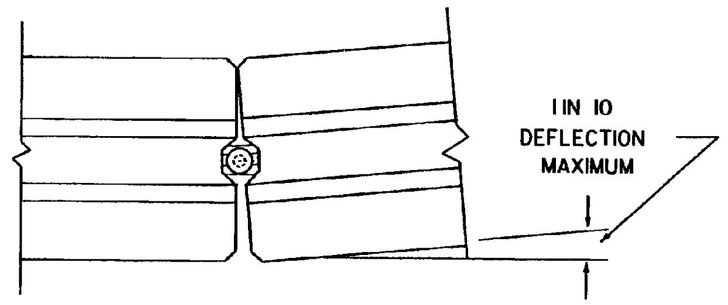

PLAN CONNECTION DETAIL

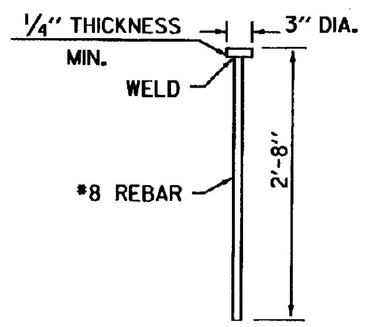

CONNECTION PIN

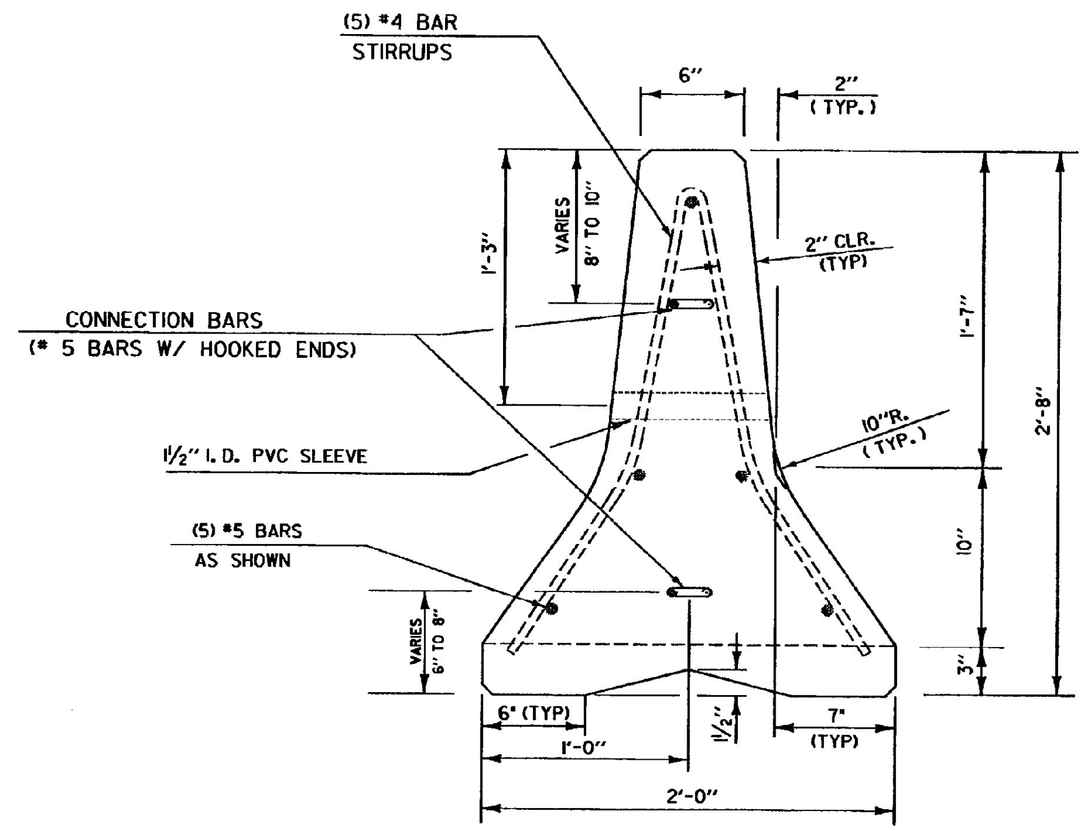

TYPICAL SECTION

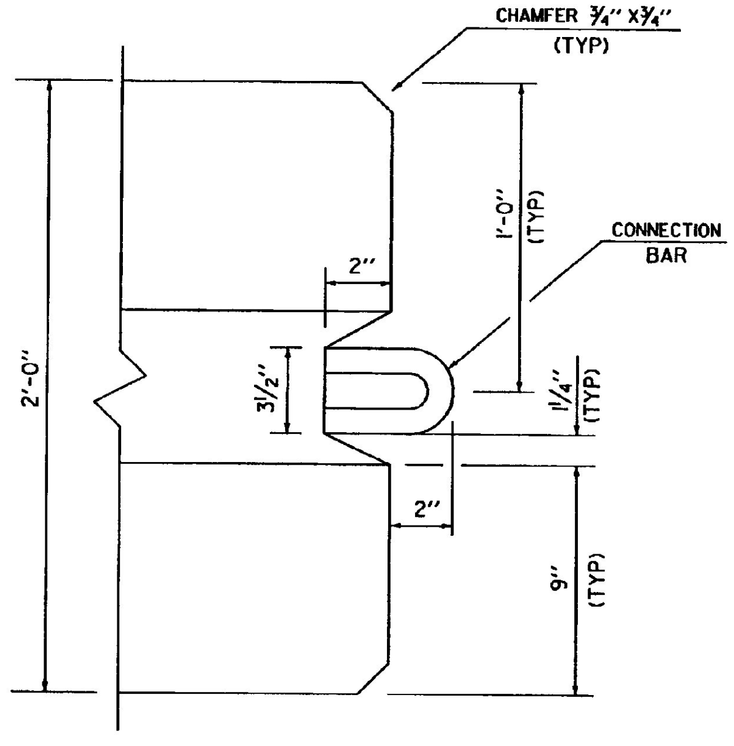

PLAN AT ENDS OF BARRIER

NOTES

1. ALL CONCRETE WILL BE CLASS A.
2. ALL REINFORCING STEEL SHALL CONFORM TO AASHTO M31, GRADE 60.
3. REFLECTORS SHALL BE INSTALLED ON THE SIDE OF THE TEMPORARY TRAFFIC BARRIER. WHEN PLACAED ON THE DRIVERS LEFT SIDE, THE REFLECTORS SHALL BE YELLOW. THE REFLECTORS SHALL BE WHITE WHEN PLACED ON THE DRIVERS RIGHT SIDE. THE REFLECTORS SHALL BE INSTALLED AT A HEIGHT OF 21 INCHES AT 20 FOOT INTERVALS AND SHALL BE AT LEAST 9 SQUARE INCHES. THE REFLECTORS SHALL MEET THE REQUIREMENTS FOR SECTION 751.02 OR 751.03. THE REFLECTORS SHALL BE INSTALLED ON BOTH SIDES WHEN PLACED IN THE MEDIAN AND IN ALL CASES SHALL BE FIRMLY ATTACHED TO THE SIDE OF BARRIER. THE TYPE OF REFLECTOR AND THE INSTALLATION PROCEDURE SHALL BE SUBMITTED FOR REVIEW PRIOR TO INSTALLATION. COST OF FURNISHING AND INSTALLING REFLECTORS SHALL BE INCLUDED IN THE PRICE BID FOR TEMPORARY TRAFFIC BARRIERS.

REVISIONS AND CORRECTIONS

JUNE 1, 1994 - REISSUED, WITHOUT CHANGE. UNDER NEW SIGNATURES.

APPROVED

APPROVED FOR THIS PROJECT AND/OR DESIGN IMPLEMENTATION. FHWA FINAL APPROVAL PENDING.

DIRECTOR OF ENGINEERING

DESIGN ENGINEER

PRECAST CONCRETE TEMPORARY TRAFFIC BARRIER

VERMONT AGENCY OF TRANSPORTATION

STANDARD

G-18

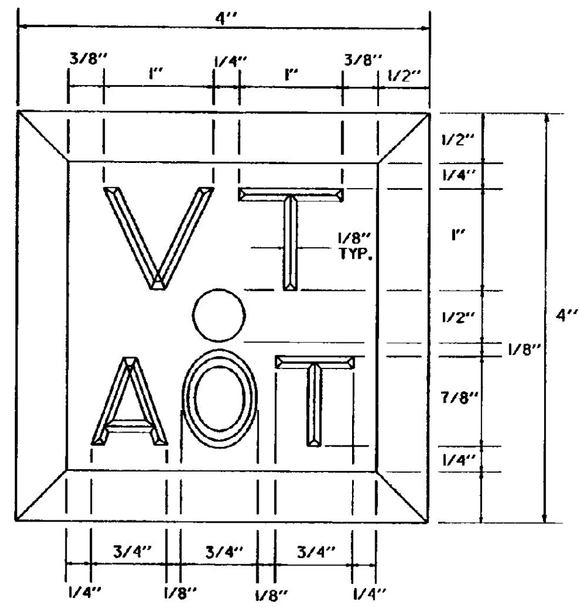

LETTERING DETAIL
(ALL LETTERS TO BE COUNTERSUNK 1/8")
SCALE: FULL SIZE

1 1/4" STEEL ROD 2'-0" LONG TO BE USED IN AREAS OF LEDGE.

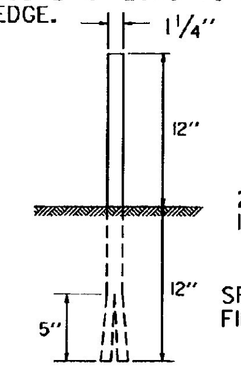

2" HOLE TO BE DRILLED IN LEDGE.

SPACE AROUND HOLE TO BE FILLED WITH MORTAR, TYPE I.

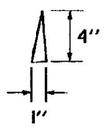

ROD TO BE SPLIT WITH IRON WEDGE

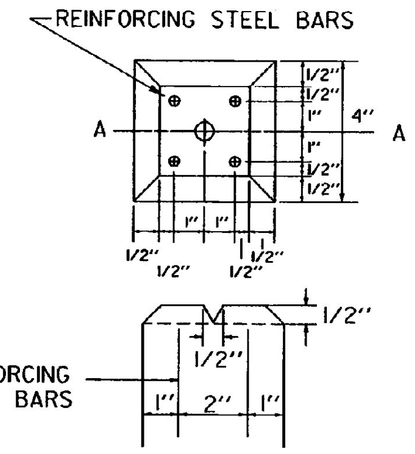

SECTION A-A

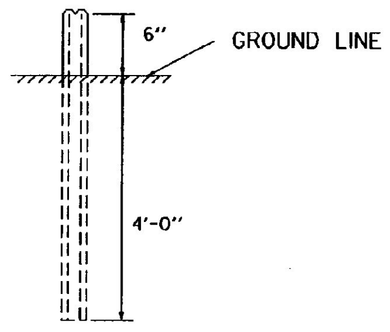

BOUNDARY MARKERS TO BE CONSTRUCTED OF CONCRETE CLASS A.
4 REINFORCING STEEL BARS ARE NO. 3 DEFORMED BARS 4'-4" LONG.
BOUNDS ARE TO BE SET WITH 6"ABOVE GROUND, OR AS DIRECTED BY THE ENGINEER.
IN AREAS WHERE MOWING OPERATIONS ARE REQUIRED, BOUNDS SHALL BE SET FLUSH WITH THE GROUND.

BOUNDARY MARKERS

REVISIONS AND CORRECTIONS
JUNE 27, 1980 - ORIGINAL APPROVAL
JUNE 1, 1994 - REISSUED, WITHOUT CHANGE, UNDER NEW SIGNATURES.

APPROVED
APPROVED FOR THIS PROJECT AND/OR DESIGN IMPLEMENTATION. FHWA FINAL APPROVAL PENDING.
Gordon S. McArthur, P.E.
DIRECTOR OF ENGINEERING
Robert M. Murphy, PE
DESIGN ENGINEER

BOUNDARY MARKERS

VERMONT AGENCY OF TRANSPORTATION

STANDARD
J-1

NOTES

1. ONLY LIGHTWEIGHT MAILBOXES MADE OF LIGHT SHEET METAL OR PLASTIC SHALL BE USED. MAILBOXES SHALL MEET REQUIREMENTS AND APPROVAL OF THE U.S. POSTAL SERVICE.
2. AN ALTERNATE MAILBOX SUPPORT STRUCTURE DESIGN AND CONSTRUCTION MAY BE USED AS LONG AS PROVEN CRASHWORTHY AND MEETS GUIDELINES AS SET OUT IN AASHTO'S "GUIDE FOR ERECTING MAILBOXES ON HIGHWAYS". SUPPORT STRUCTURE SHALL ALSO MEET REQUIREMENTS OF THE U.S. POSTAL SERVICE.
3. MAILBOX TURNOUT SHALL MEET B-17 STANDARD AS SET OUT IN "STATE OF VERMONT AGENCY OF TRANSPORTATION DESIGN STANDARDS FOR ROAD AND BRIDGE CONSTRUCTION".
4. IF THE STANDARD TURNOUT OFFSET CANNOT BE ATTAINED DUE TO RIGHT-OF-WAY CONSTRAINTS OR OTHER REASONS THE TURNOUT SHALL BE MODIFIED AS DIRECTED BY THE ENGINEER.

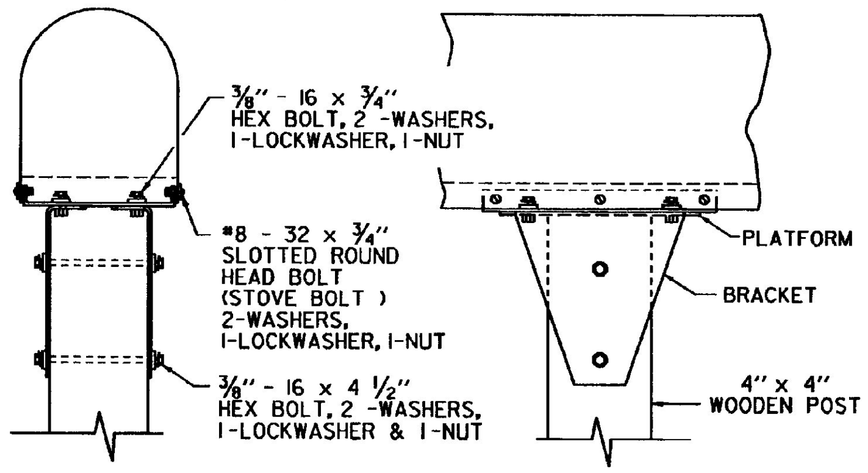

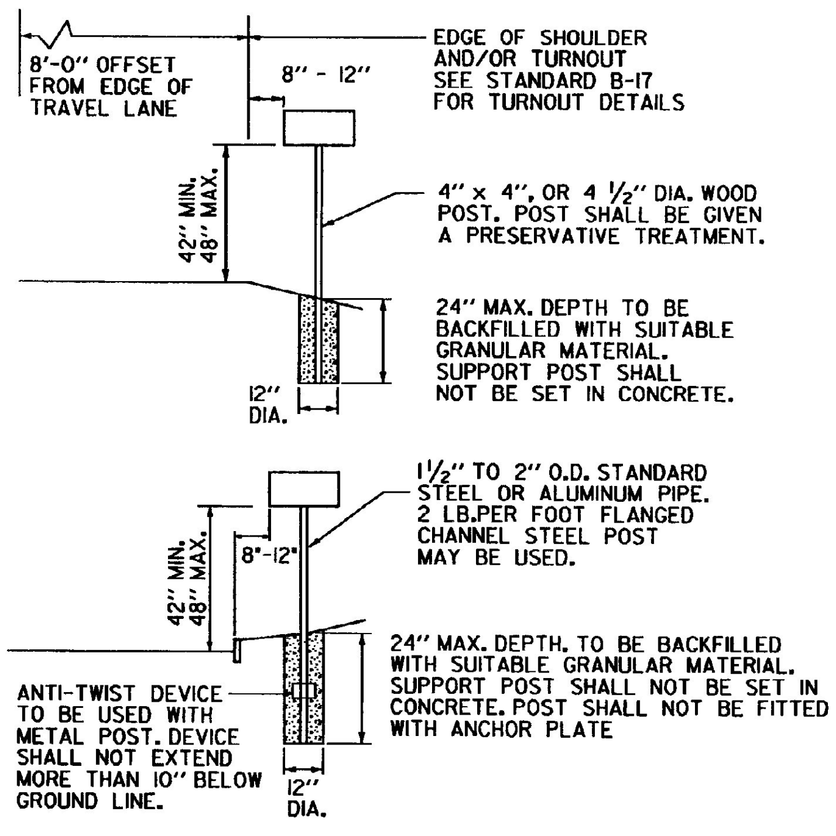

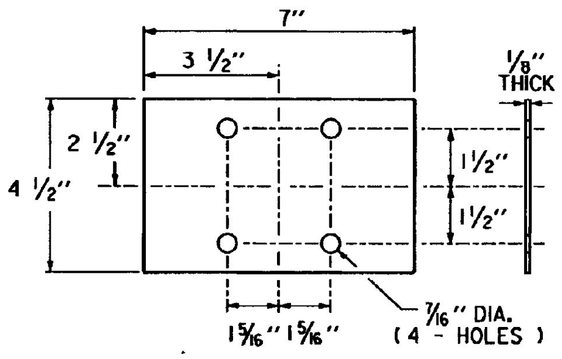

ANTI-TWIST DEVICE DETAIL FOR METAL PIPE

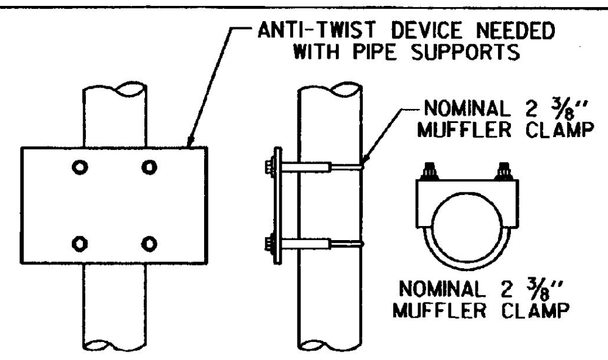

ANTI-TWIST DEVICE ASSEMBLY FOR METAL PIPES (USED FOR SINGLE AND MULTIPLE INSTALLATIONS)

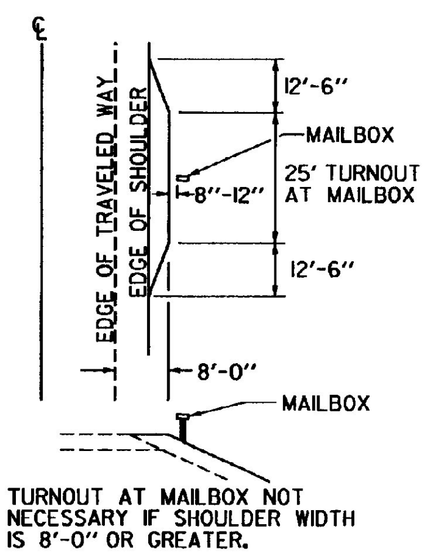

TURNOUT AT MAILBOX NOT NECESSARY IF SHOULDER WIDTH IS 8'-0" OR GREATER.

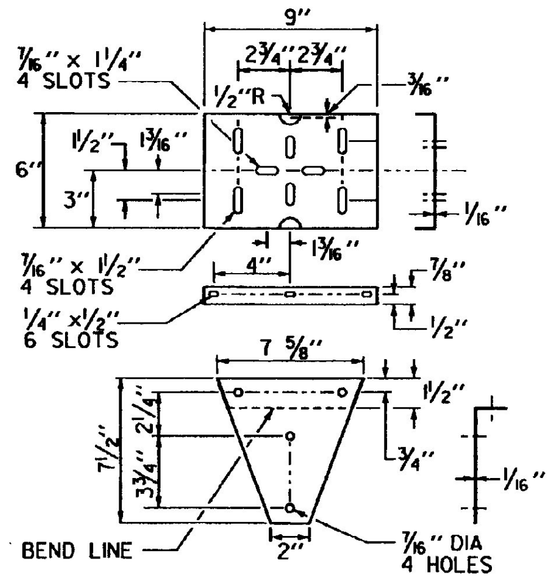

SINGLE MAILBOX SUPPORT

PLATFORM AND BRACKET DETAIL FOR METAL OR WOOD POSTS (USED FOR SINGLE AND MULTIPLE BOXES)

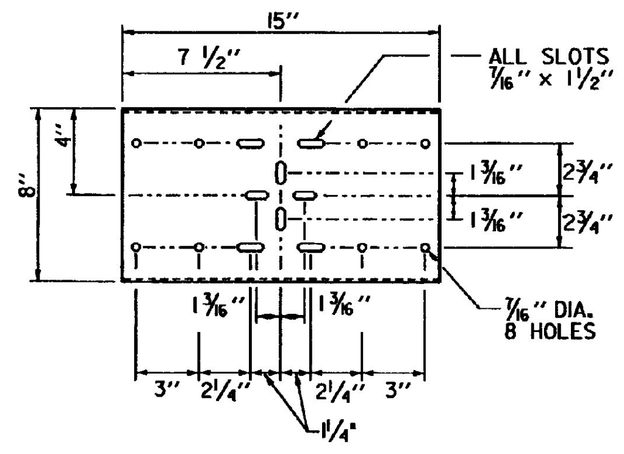

SHELF FOR TWO BOXES

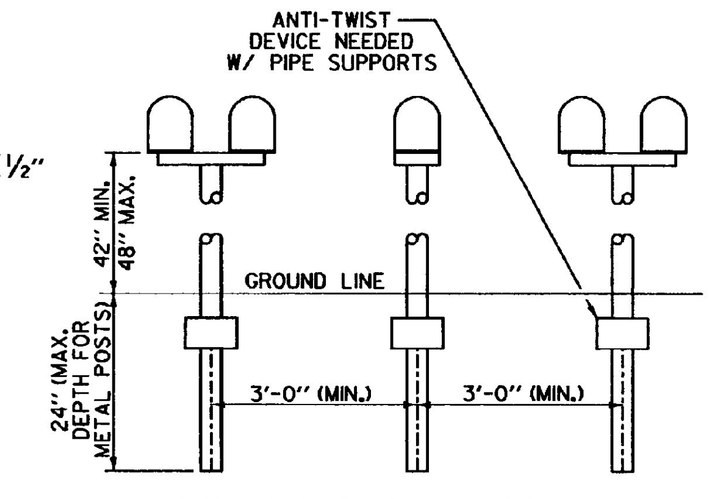

SPACING FOR MULTIPLE POST INSTALLATION

(APPLIES TO BOTH SINGLE AND MULTIPLE MAILBOX SUPPORTS)

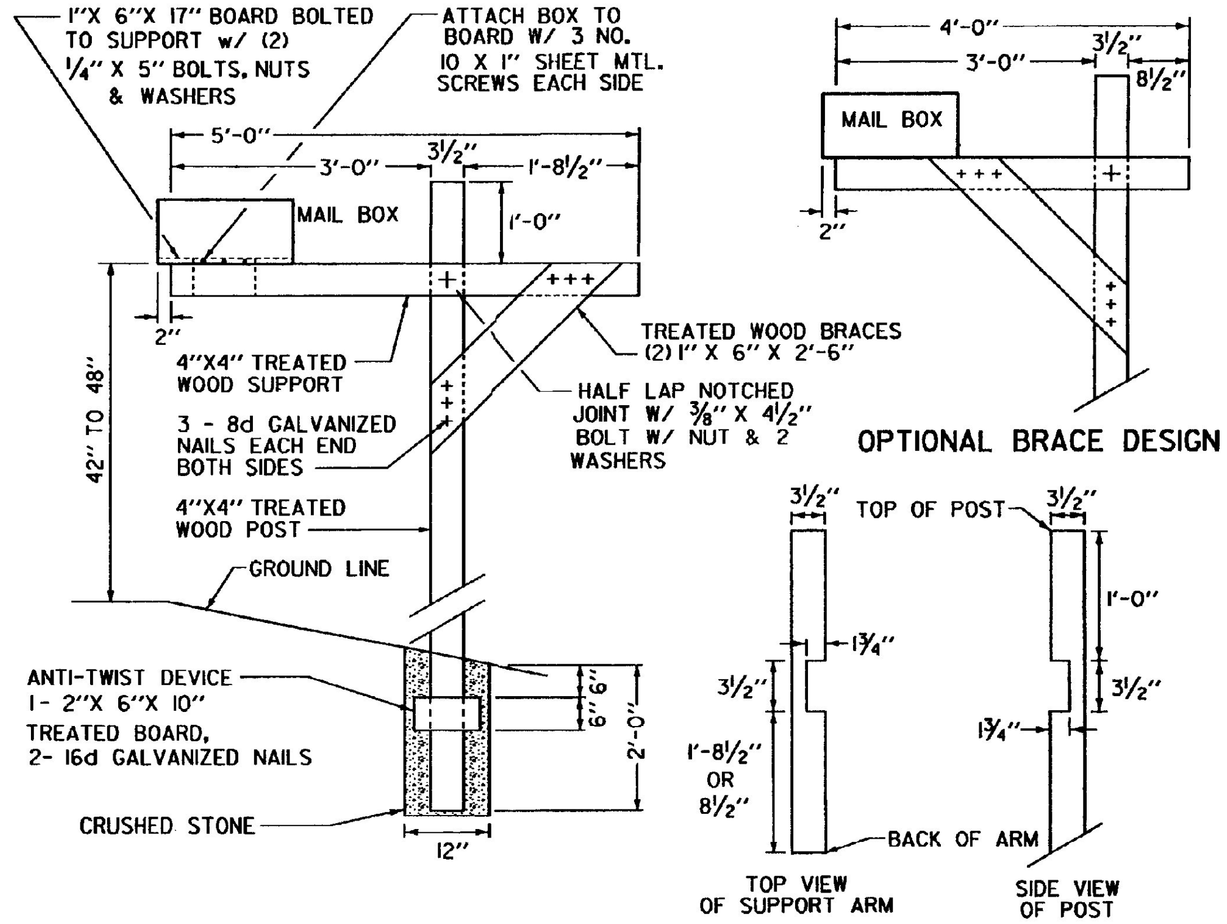

CANTILEVER TYPE MAILBOX SINGLE SUPPORT

NOTE: ALL WOOD DIMENSIONS ARE NOMINAL SIZE

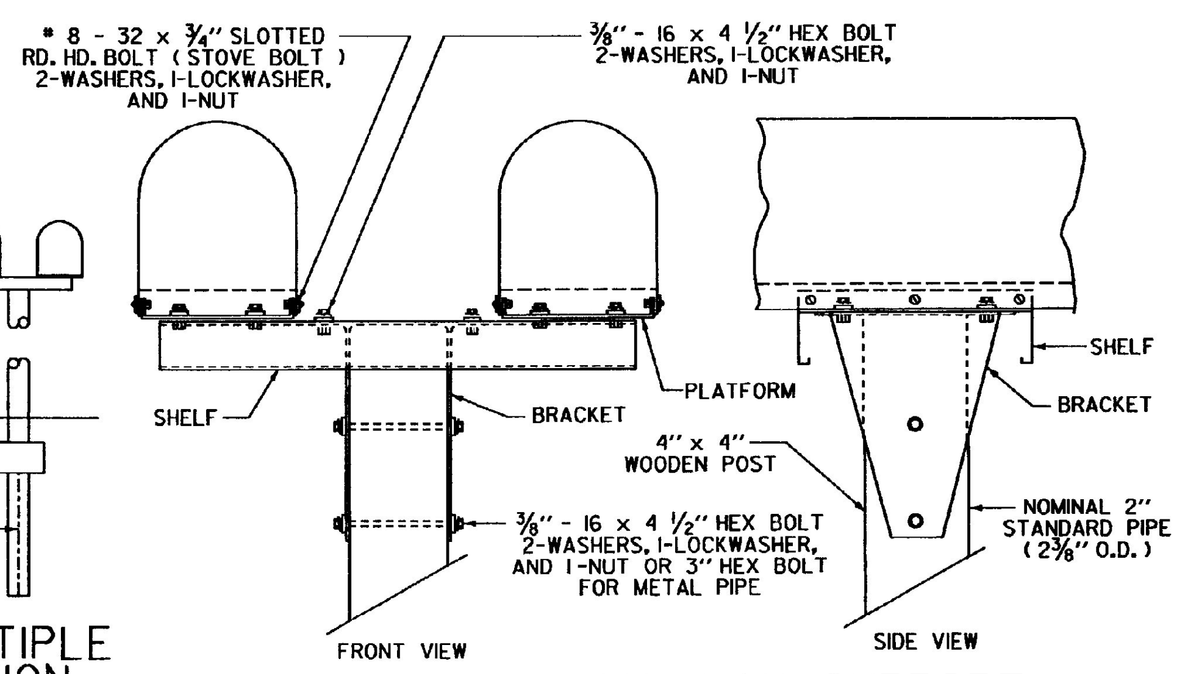

MULTIPLE MAILBOX SUPPORT

REVISIONS AND CORRECTIONS

AUGUST 7, 1995 ORIGINAL APPROVAL

APPROVED

APPROVED FOR THIS PROJECT AND/OR DESIGN IMPLEMENTATION. FHWA FINAL APPROVAL PENDING.

DIRECTOR OF ENGINEERING

DESIGN ENGINEER

MAILBOX SUPPORT DETAIL (SINGLE AND MULTIPLE SUPPORT)

VERMONT AGENCY OF TRANSPORTATION

STANDARD J-3

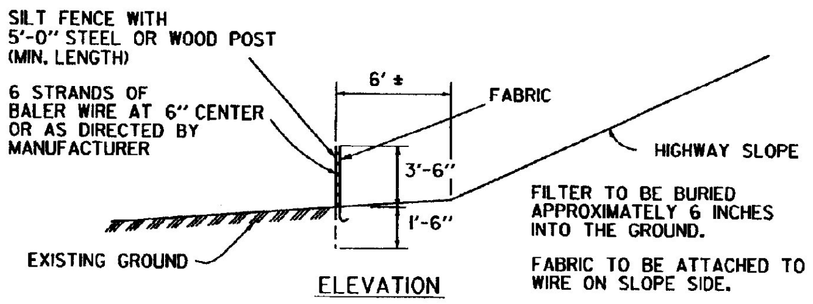

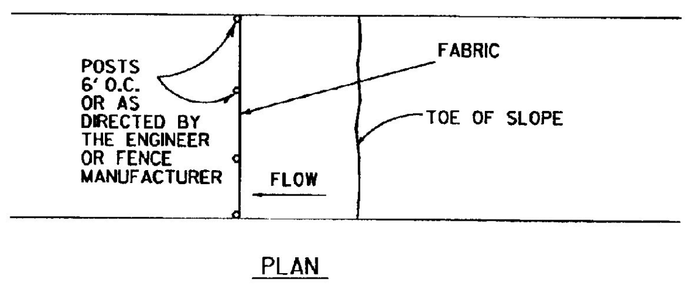

SILT FENCE

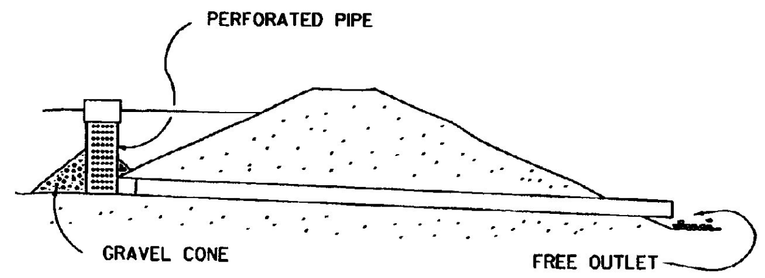

LARGE - PERMANENT INSTALLATION
PIPE RISER - STONE OUTLET

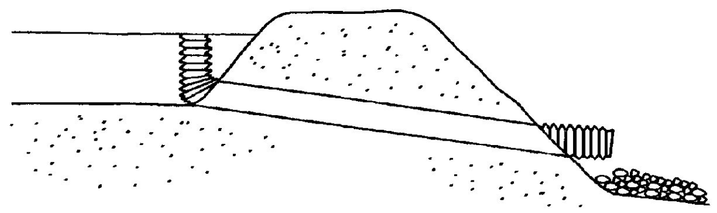

SMALL - TEMPORARY INSTALLATION
ACCM PIPE WITH RISER - STONE OUTLET

SEDIMENT DAMS

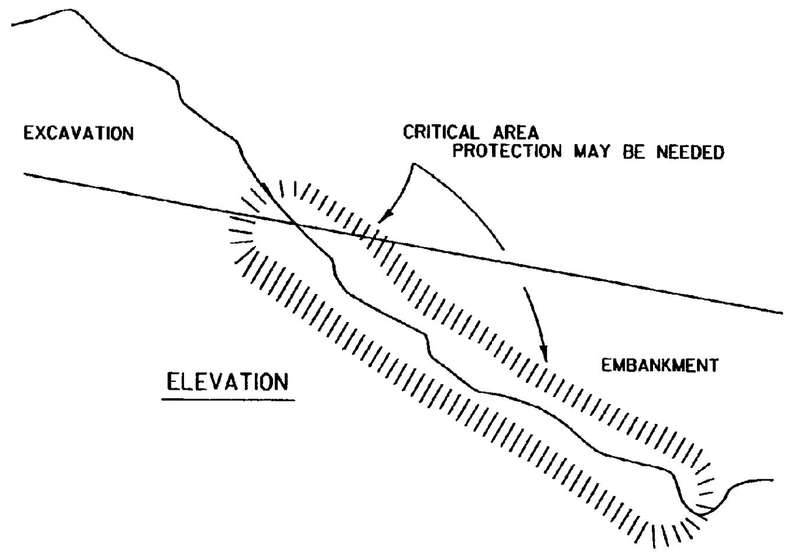

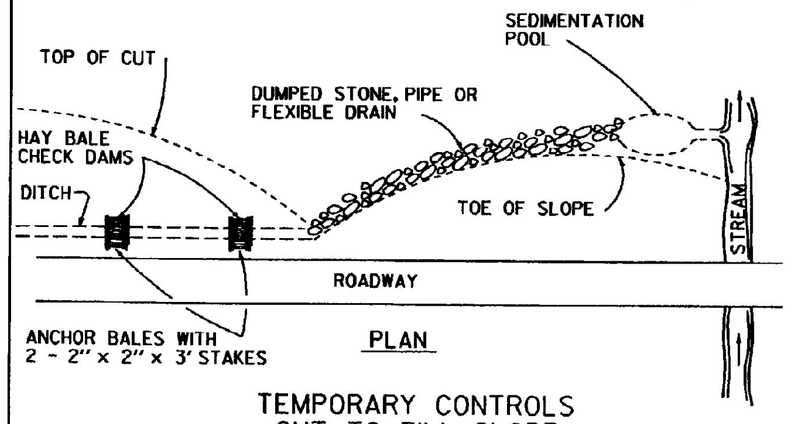

TEMPORARY CONTROLS
CUT TO FILL SLOPE

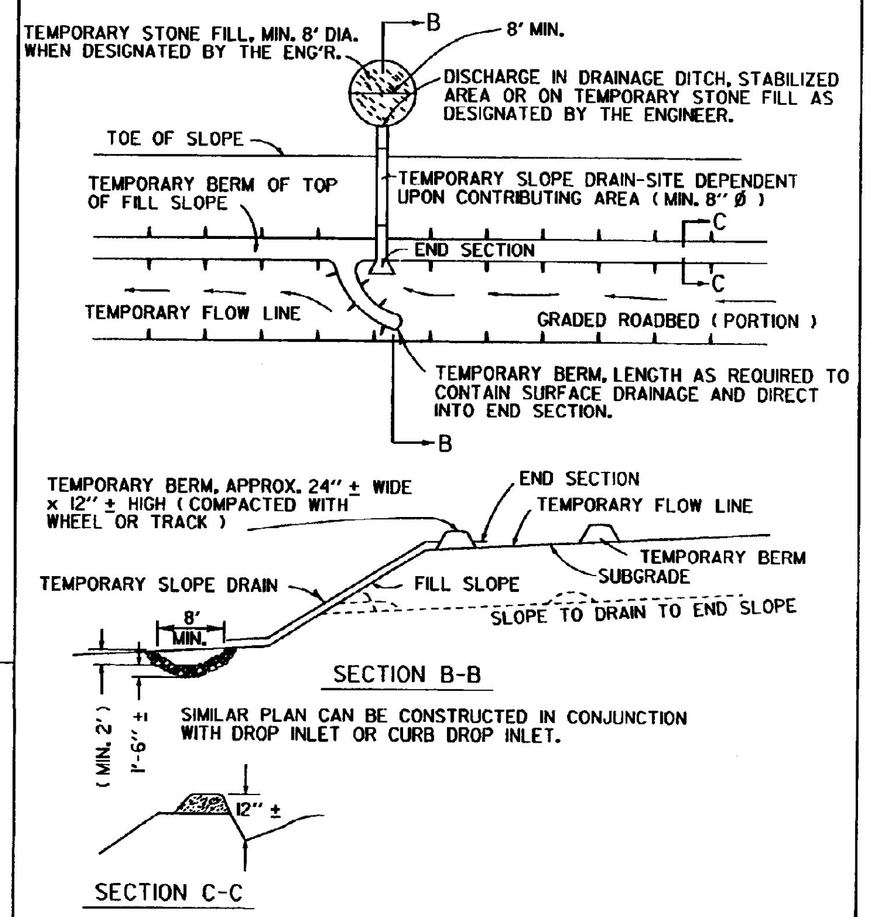

TEMPORARY BERMS AND SLOPE DRAINS
FOR FILL SLOPES

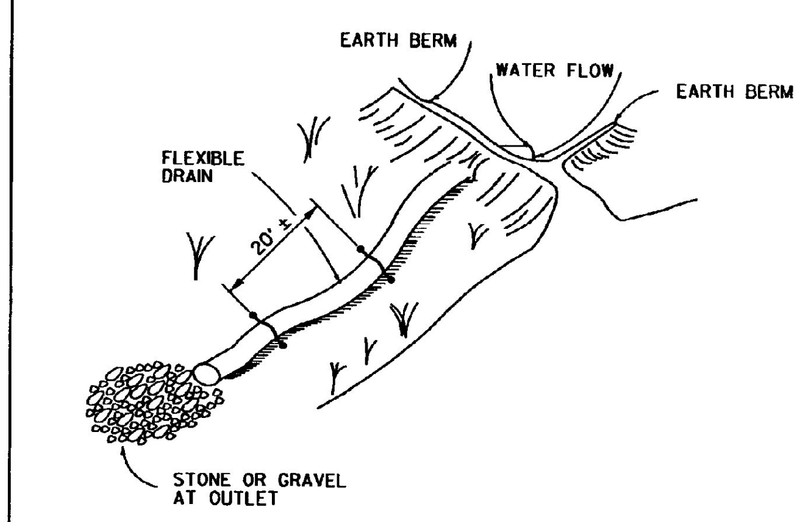

TEMPORARY FLEXIBLE SLOPE DRAIN

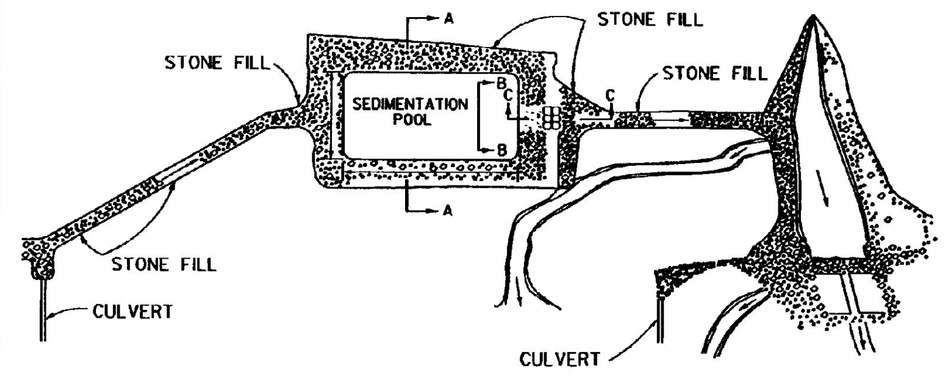

SEDIMENTATION POOL

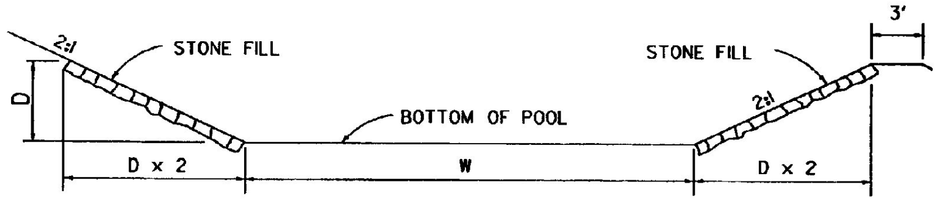

SECTION A-A

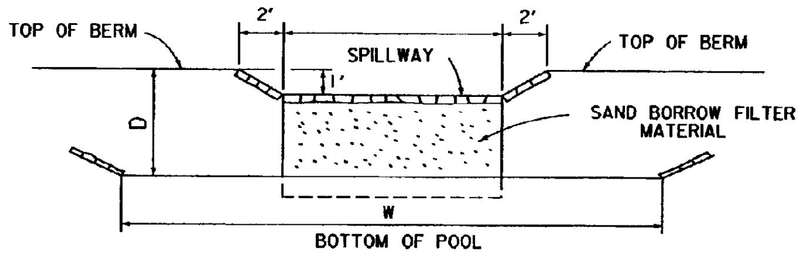

DETAILS OF SPILLWAY TO BE DETERMINED BY HYDRAULIC SECTION.

SECTION B-B

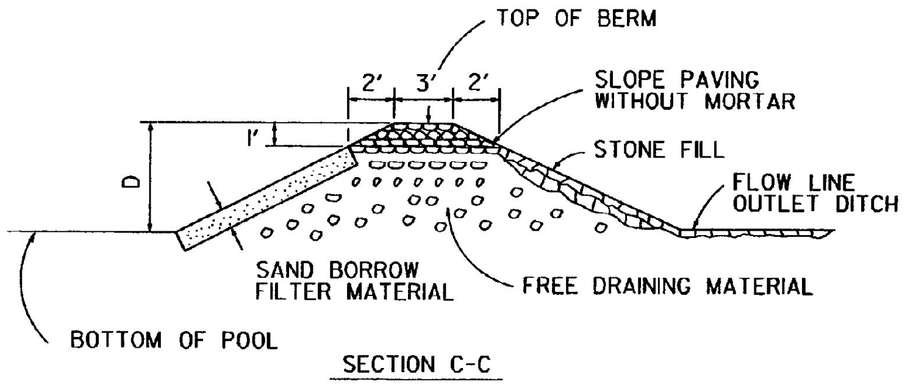

SECTION C-C

REVISIONS AND CORRECTIONS

JUL. 5, 1972 - ORIGINAL APPROVAL
JUN. 14, 1973 - SEDIMENT TRAPS REMOVED FROM TEMPORARY BERMS & SLOPE DRAINS FOR FILL SLOPES
FEB. 26, 1976 - SILT FENCE ADDED
DEC. 7, 1976 - HAY BALE ANCHOR NOTE ADDED
JUN. 1, 1994 - SILT FENCE NOTES AND DIMENSIONS CHANGED

APPROVED

APPROVED FOR THIS PROJECT AND/OR DESIGN IMPLEMENTATION. FHWA FINAL APPROVAL PENDING.

Gordon S. MacArthur
DIRECTOR OF ENGINEERING

DESIGN ENGINEER

TEMPORARY EROSION CONTROL DETAILS

VERMONT AGENCY OF TRANSPORTATION

STANDARD
T-1

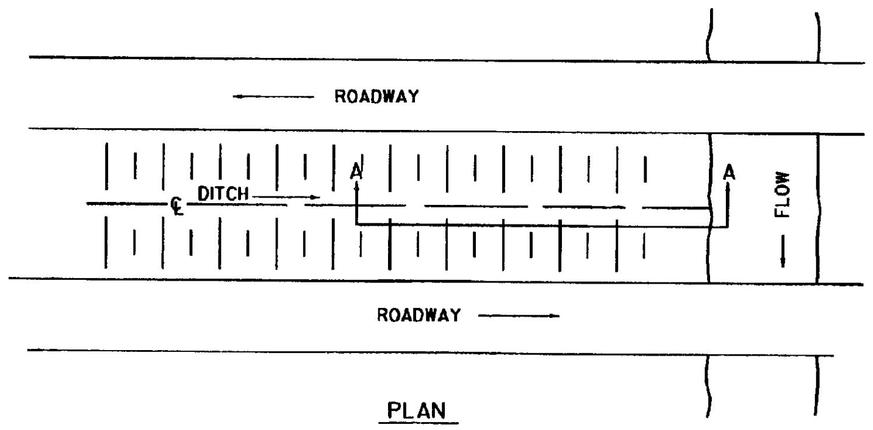

PLAN

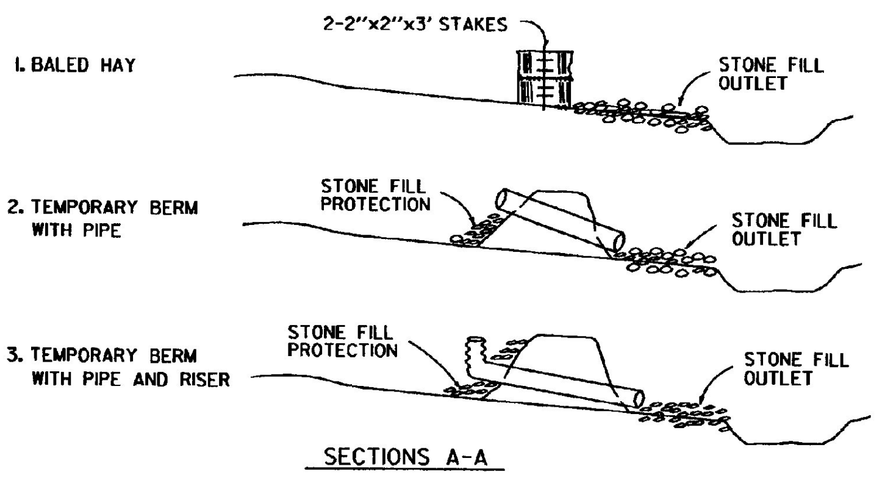

SECTIONS A-A

PROTECTION AT STREAM CROSSING
MEDIAN AND SIDE DITCHES

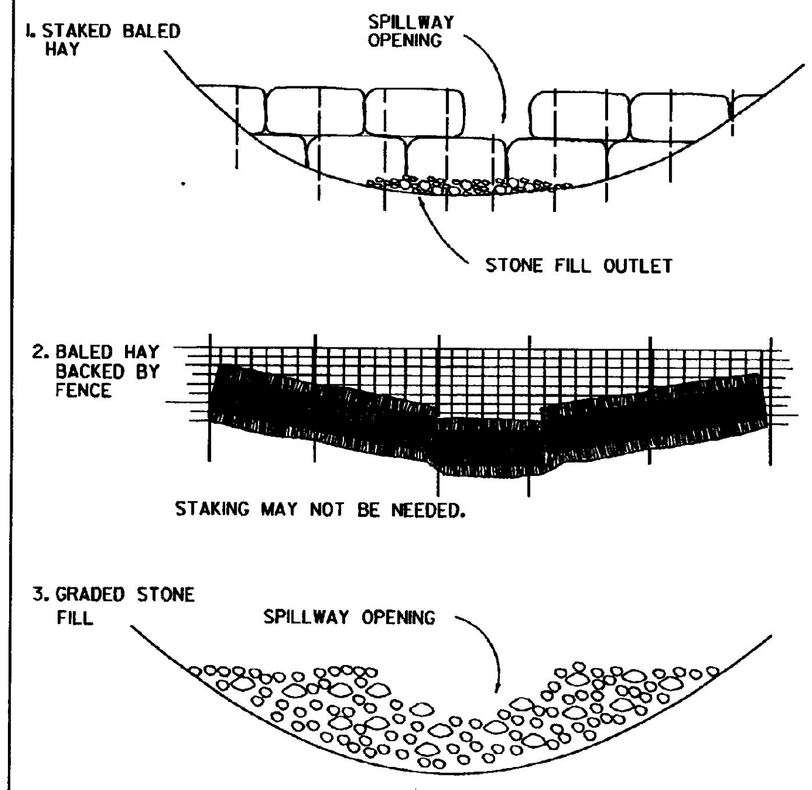

ELEVATIONS

TYPES OF TEMPORARY DAMS

DAM SHOULD EXTEND FAR ENOUGH UP DITCH SIDE SLOPES TO EFFECTIVELY POND THE RUNOFF AND PREVENT EROSION AND WASHOUT.

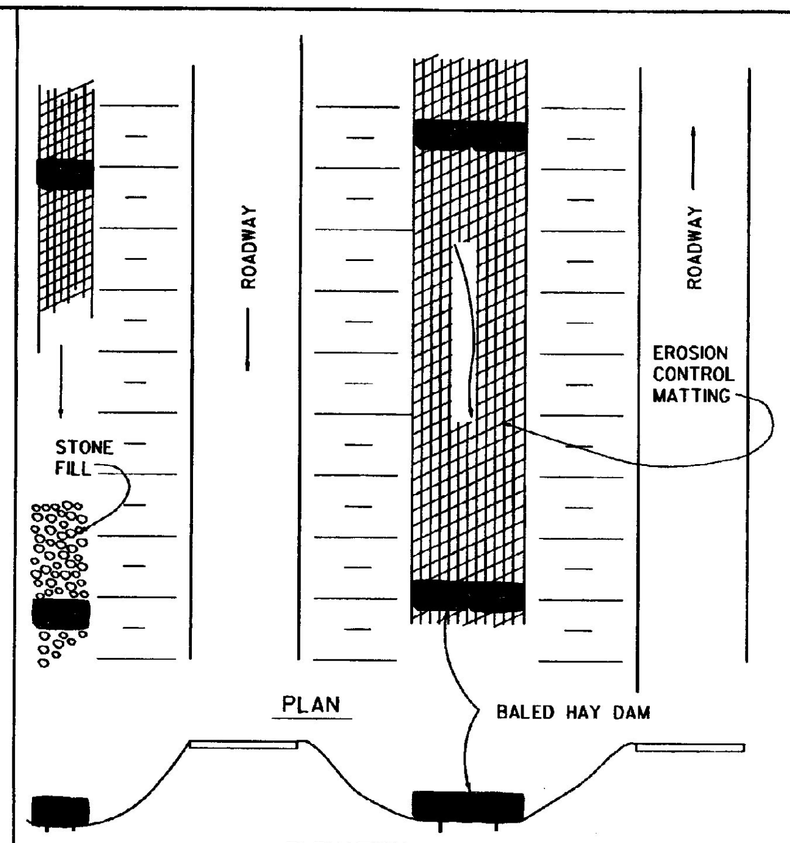

ELEVATION

BALED HAY DAMS USED IN DITCHES

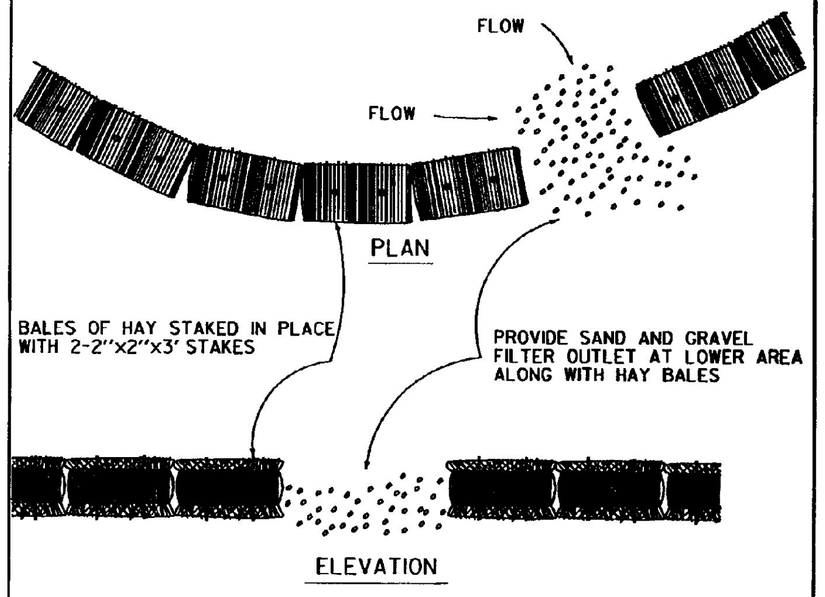

ELEVATION

BALED HAY DAMS ALONG TOE OF SLOPE

SEDIMENT TRAP
LOOSE HAY BACKED BY STAKES

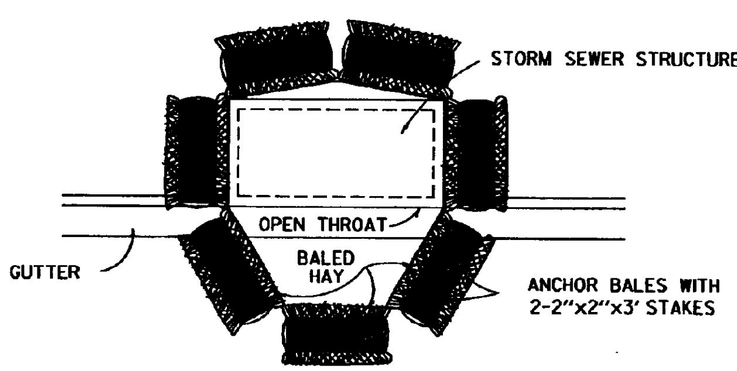

INLET PROTECTION
TEMPORARY BARRIER - HAY BALES

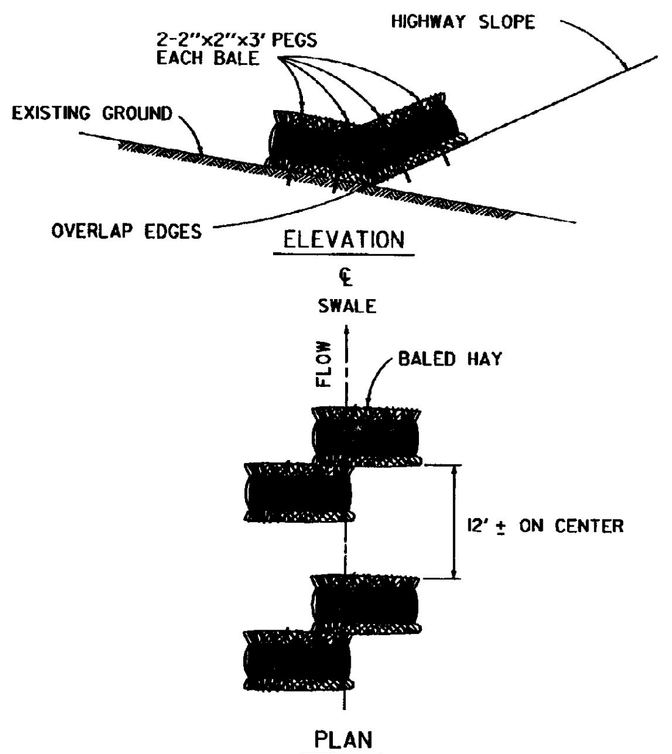

TO BE USED IN LOCATIONS WHERE THE EXISTING GROUND SLOPES IN TOWARD THE EMBANKMENT.
BALES WILL BE ALLOWED TO ROT IN PLACE.

BALED HAY EROSION CHECKS

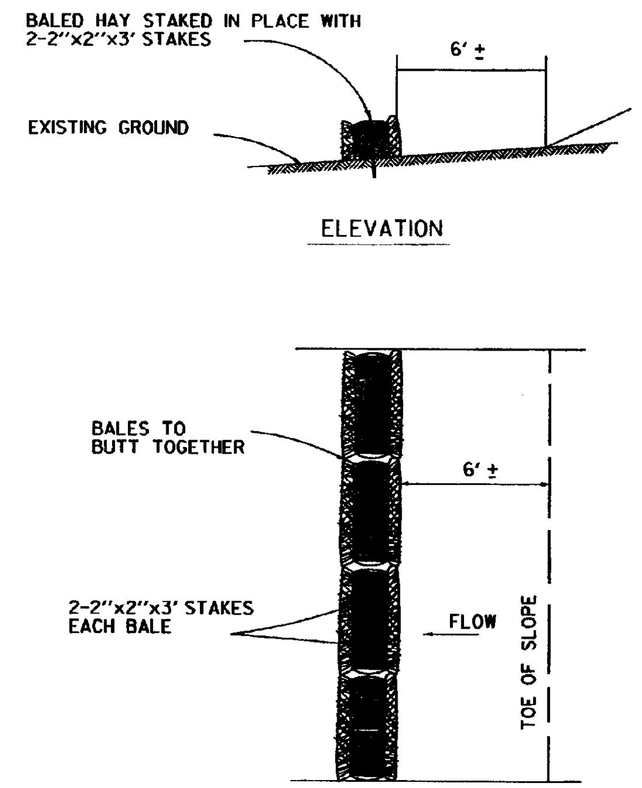

TO BE USED WHERE THE EXISTING GROUND SLOPES AWAY FROM THE HIGHWAY EMBANKMENT.

BALED HAY EROSION CHECKS

REVISIONS AND CORRECTIONS

JUL. 5, 1972 - ORIGINAL APPROVAL

JUNE 1, 1994 - REISSUED, WITHOUT CHANGE, UNDER NEW SIGNATURES.

APPROVED

APPROVED FOR THIS PROJECT AND/OR DESIGN IMPLEMENTATION. FHWA FINAL APPROVAL PENDING.

DIRECTOR OF ENGINEERING

DESIGN ENGINEER

TEMPORARY EROSION CONTROL DETAILS

VERMONT AGENCY OF TRANSPORTATION

STANDARD T-2