State of Vermont
Department of Buildings & General Services

WILLISTON INFORMATION CENTER

I-89 SOUTHBOUND
WILLISTON, VERMONT
FEDERAL PROJECT NO. IM BLDG (4)

AGENCY OF ADMINISTRATION
DEPT. OF BUILDINGS & GENERAL SERVICES
2 GOVERNOR AIKEN AVENUE
MONTPELIER, VERMONT 05633-5801
THOMAS W. TORTI, COMMISSIONER

FEDERAL HIGHWAY ADMIN. VERMONT DIVISION
FEDERAL BUILDING
87 STATE STREET, P.O. BOX 568
MONTPELIER, VERMONT 05601
CHARLES E. BASNER

Mark D. Richter 1-19-2001
for DIVISION ADMINISTRATOR

AGENCY OF ADMINISTRATION
NATIONAL LIFE BUILDING
1 NATIONAL LIFE DRIVE
MONTPELIER, VERMONT 05633
BRIAN R. SEARLES, SECRETARY

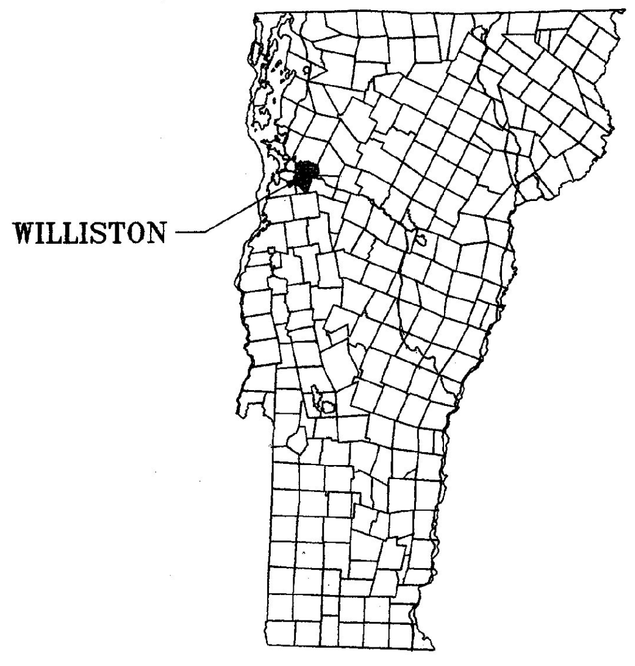

PROJECT LOCATION

Howard Dean, M.D.
Governor

January 16, 2001

DUNCAN/WISNIEWSKI ARCHITECTURE
255 SO. CHAMPLAIN ST.
BURLINGTON, VERMONT 05401

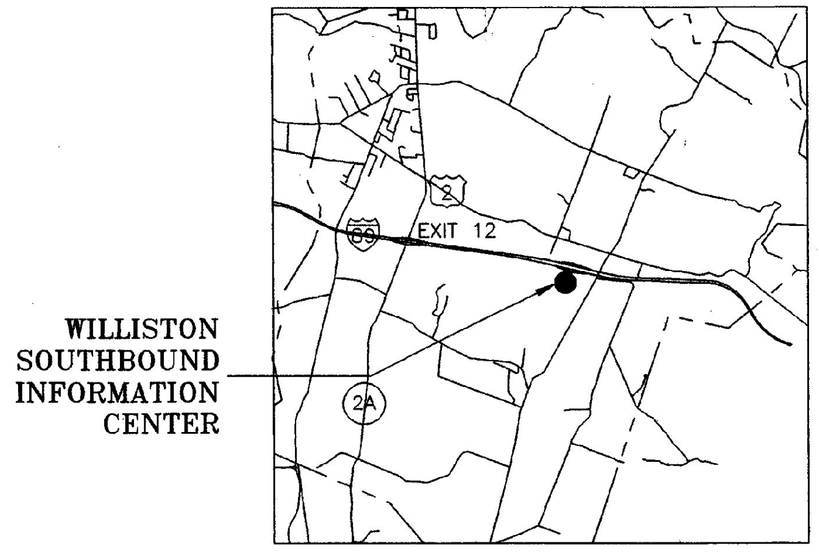

PROJECT LOCATION

WILLISTON INFORMATION CENTER I89 Southbound

CIVIL

C0sb TITLE SHEET
C1sb LAYOUT PLAN
C2sb SOIL BORINGS
C3sb UTILITY PLAN
C4sb GRADING PLAN
C5sb ACCESS DRIVE PROFILES
C6sb WATER & SEWER PROFILES
C7sb ACCELERATION LANE PLAN
C8sb TEMPORARY RAMP PLAN & PROFILE
C9sb EROSION CONTROL DETAILS
C10sb DETAILS
C11sb DETAILS
C12sb SIGNS & PAVEMENT MARKINGS
C13sb SIGN DETAILS
C14sb TRAFFIC CONTROL PLAN
C15sb ADDITIONAL TRAFFIC CONTROL
C16sb SPECIFICATIONS
C17sb CROSS-SECTIONS STA. 16+50 - 21+00
C18sb CROSS-SECTIONS STA. 21+50 - 26+00
C19sb CROSS-SECTIONS STA. 26+50 - 31+00

LANDSCAPE

L1sb GRADING PLAN
L2sb GRADING PLAN
L3sb LAYOUT & MATERIALS PLAN
L4sb LAYOUT & MATERIALS
L5sb BUILDING SITE PLANTING PLAN
L6sb BUILDING SITE PLANTING PLAN
L7sb OVERALL SITE PLANTING PLAN
L8sb ENTRY ENLARGEMENT PLAN
L9 CONSTRUCTION DETAILS
L10 CONSTRUCTION DETAILS
L11sb CONSTRUCTION DETAILS

ARCHITECTURAL

A0sb CODE SUMMARY & ROOF PLAN
A1sb FLOOR PLAN
A2sb FLOORING FINISHES PLAN
A3sb REFLECTED CEILING PLAN
A4sb LOFT PLAN
A5sb CRAWL SPACE PLAN
A6sb SERVICE BUILDING - PLAN/SECTION/ELEVATIONS
A7sb ELEVATION - MAIN ENTRY GABLE
A8sb ELEVATION - AUTO ENTRY
A9sb ELEVATION - TRUCK ENTRY
A10sb ELEVATION - SERVICE GABLE
A11sb SECTION 1 - ENTRY
A12sb SECTION 2 - INFORMATION
A13sb SECTION 3 - INFORMATION
A14sb SECTION 4 - BATHROOMS
A15sb SECTION 5 - SERVICE ZONE
A16sb SECTION 6 - PARTIAL LONGITUDINAL
A17sb FRONT BATHROOM/VENDING DETAILS
A18sb INTERIOR ELEVATIONS
A19sb INTERIOR ELEVATIONS
A20sb INTERIOR ELEVATIONS
A21sb INTERIOR ELEVATIONS
A22sb TYPICAL WALL & FLOOR DETAILS
A23sb WALL SECTION DETAILS
A24sb WALL SECTION DETAILS
A25sb BIG CUPOLA DETAILS
A26sb MILLWORK: RECEPTION
A27sb MILLWORK: COFFEE, BENCH, COMPUTER
A28sb MILLWORK: DISPLAY UNITS
A29sb MILLWORK: DISPLAY UNITS
A30sb LITTLE CUPOLA DETAILS
A31sb CONNECTOR & SECTION DETAILS
A32sb ROOM & DOOR SCHEDULES, DOOR/WINDOW DETAILS
A33sb TELEPHONE KIOSK DETAILS

STRUCTURAL

S1sb FOUNDATION PLAN
S2sb FOUNDATION DETAILS
S3sb FOUNDATION DETAILS
S4sb FIRST FLOOR FRAMING PLAN
S5sb LOFT FRAMING PLAN
S6sb ROOF FRAMING PLAN
S7sb STRUCTURAL DETAILS
S8sb STRUCTURAL DETAILS

MECHANICAL

HP-0sb LEGEND AND ABBREVIATIONS

HEATING AND VENTILATING

H-1sb SCHEDULES
H-2sb CRAWL SPACE HVAC PLAN
H-3sb MAIN FLOOR HVAC PLAN
H-4sb LOFT HVAC PLAN
H-5sb HVAC BUILDING SECTIONS
H-6sb HVAC FLOW SCHEMATIC
H-7sb HVAC FLOW SCHEMATIC
H-8sb HVAC FLOW SCHEMATIC
H-9sb HVAC DETAILS

PLUMBING

P-1sb SCHEDULES AND DETAILS
P-2sb CRAWL SPACE PLUMBING PLAN
P-3sb MAIN FLOOR PLUMBING PLAN
P-4sb SANITARY RISERS & DETAILS & LOFT PLUMBING PLAN
P-5sb DOM. HOT/COLD WATER RISERS

ELECTRICAL

E-0sb LEGEND AND ABBREVIATIONS
E-1sb ELECTRICAL SITE PLAN
E-2sb CRAWL SPACE LTG. & POWER PLAN
E-3sb MAIN FLOOR LIGHTING PLAN
E-4sb MAIN FLOOR POWER PLAN
E-5sb LOFT LIGHTING & POWER PLAN
E-6sb ONE-LINE & RISER DIAGRAMS
E-7sb ELECTRICAL DETAILS
E-8sb ELECTRICAL SCHEDULES

OWNER:
State of Vermont
Department of Buildings and General Services
Two Governor Aiken Avenue, Montpelier, VT 05633
Contact: Ray Rossi 802.828.5648

FEDERAL HIGHWAY ADMINISTRATION:
Federal Building
P.O. BOX 568
87 State St., Room 216, Montpelier, VT 05601
Contact: Mark Richter 802.828.4423

ARCHITECT:
DUNCAN • WISNIEWSKI ARCHITECTURE
255 South Champlain Street Burlington, VT 05401
Contact: Michael Wisniewski 802.864.6693

CIVIL/STRUCTURAL ENGINEER:
CHAMPLAIN CONSULTING ENGINEERS
Box 453, Colchester, VT 05446
Contact: Paul Duchesneau 802.863.8060

LANDSCAPE ARCHITECT:
OFFICE OF H. KEITH WAGNER
7 Marble Ave., Burlington, VT 05401
Contact: Aaron Stein 802.655.0010

MECHANICAL/ELECTRICAL ENGINEER:
HALLAM ASSOCIATES, INC.
60 Farrell St. # 300, South Burlington, VT 05403
Contact: Mike Cook (HVAC) 802.658.4891
Contact: Brian Browning (Electric) 802.658.4891

STATE OF VERMONT
DEPARTMENT OF BUILDINGS AND GENERAL SERVICES

Project #: IM - BLDG (4)

INTERSTATE 89 SOUTHBOUND
WILLISTON INFORMATION CENTER

STANDARD SHEETS

B – 5	EMBANKMENT ON EARTH SLOPE	06–01–94
C – 1	VERTICAL GRANITE CURBING GRANITE SLOPE EDGING	01–03–00
D – 2	CEMENT RUBBLE MASONRY WALLS & RETAINING WALL RIPRAP LIGHT TYPE SLOPE HEADWALL REINFORCED CONCRETE HEADWALL UNDERDRAIN & CARRIER PIPE CONSTRUCTION DETAILS	06–01–94
D – 3	TREATED GUTTERS	06–01–94
D – 4	EXTENSION SERVICE BOX AND CURB STOP CORRUGATED STEEL PIPE END SECTION GRANULAR MATERIAL AT CULVERT LOCATION	06–01–94
E – 100	CONSTRUCTION APPROACH SIGNS	01–06–97
E – 101	CONSTRUCTION SIGN DETAILS	03–10–97
E – 102	CONSTRUCTION SIGN DETAILS	08–08–95
E – 102A	CONSTRUCTION SIGN DETAILS	08–08–95
E – 103	MAINLINE TRAFFIC CONTROL	09–23–98
E – 106	TRAFFIC CONTROL – MISCELLANEOUS DETAILS	08–08–95
E – 107	DELINEATION, BARRICADES AND DETOURS FOR CONSTRUCTION AREAS	08–08–95
E – 107A	BREAKAWAY BARRICADE DETAILS	08–08–95
E – 108	CONSTRUCTION ZONE LONGITUDINAL DROP OFF	08–18–95
E – 109	TRAFFIC CONTROL DEVICES FOR TEMPORARY TERMINATION OF FREEWAY FACILITIES	08–08–95
E – 110	MAJOR MAINTENANCE OPERATION LANE CLOSURE	08–08–95
E – 111	APPROACH SIGNS, MINOR MAINTENANCE	03–11–97
E – 120	STANDARD SIGN PLACEMENT – EXPRESSWAY & FREEWAY	08–08–95
E – 121	STANDARD SIGN PLACEMENT – CONVENTIONAL ROAD	08–08–95
E – 123	GUIDE SIGN PLACEMENT – MISCELLANEOUS DETAILS	08–08–95
E – 130	TYPE "B" GUIDE SIGN DETAILS	08–08–95
E – 131	SERVICE SIGNS	08–08–95
E – 132	SERVICE SIGN DETAILS	08–18–95
E – 135	INTERSTATE ROUTE MARKER SIGN DETAILS	08–18–95
E – 139	MARKER DETAILS INTERSTATE	04–01–98
E – 142	REGULATORY SIGN DETAILS	09–20–95
E – 143	REGULATORY SIGN DETAILS	09–20–95
E – 144	REGULATORY SIGN DETAILS	03–29–99
E – 146	REGULATORY SIGN DETAILS	09–20–95
E – 150	WARNING SIGN DETAILS	01–15–97
E – 154	WARNING SIGN DETAILS	08–08–95
E – 160	FLANGED CHANNEL STEEL SIGN POST	05–20–99
E – 161	W–SHAPED STEEL SIGN POST	08–18–95
E – 162	TUBULAR ALUMINUM SIGN POST	05–20–99
E – 163	TUBULAR STEEL SIGN POST	05–20–99
E – 164	SQUARE STEEL SIGN POST	05–20–99
E – 191	PAVEMENT MARKING DETAILS	02–01–99
E – 198	FREEWAY–EXPRESSWAY DELIEATORS & REFERENCE PLAQUES	04–14–97
F – 1	WOVEN WIRE FENCE WITH STEEL POSTS	06–01–94
F – 2	CHAIN LINK FENCE (TYPE I)	06–01–94

WILLISTON, VERMONT

JANUARY 16, 2001

STATE OF VERMONT

DEPARTMENT OF BUILDINGS AND GENERAL SERVICES

PROJECT # IM–BLDG(4)

LIST OF DRAWINGS

C0sb	TITLE SHEET	S1sb	FOUNDATION PLAN
C1sb	LAYOUT PLAN	S2sb	FOUNDATION DETAILS
C2sb	SOIL BORINGS	S3sb	FOUNDATION DETAILS
C3sb	UTILITY PLAN	S4sb	FIRST FLOOR FRAMING PLAN
C4sb	GRADING PLAN	S5sb	LOFT FRAMING PLAN
C5sb	ACCESS DRIVE PROFILES	S6sb	ROOF FRAMING PLAN
C6sb	WATER & SEWER PROFILES	S7sb	STRUCTURAL DETAILS
C7sb	ACCELERATION LANE PLAN	S8sb	STRUCTURAL DETAILS
C8sb	TEMPORARY RAMP PLAN & PROFILE		
C9sb	EROSION CONTROL DETAILS		
C10sb	DETAILS		
C11sb	DETAILS		
C12sb	SIGNS & PAVEMENT MARKINGS		
C13sb	SIGN DETAILS		
C14sb	TRAFFIC CONTROL PLAN		
C15sb	ADDITIONAL TRAFFIC CONTROL		
C16sb	SPECIFICATIONS		
C17sb	CROSS–SECTIONS STA 16+50 – 21+00		
C18sb	CROSS–SECTIONS STA 21+50 – 26+00		
C19sb	CROSS–SECTIONS STA 26+50 – 31+00		

CIVIL & STRUCTURAL ENGINEER

CHAMPLAIN CONSULTING ENGINEERS
COLCHESTER, VERMONT 05446

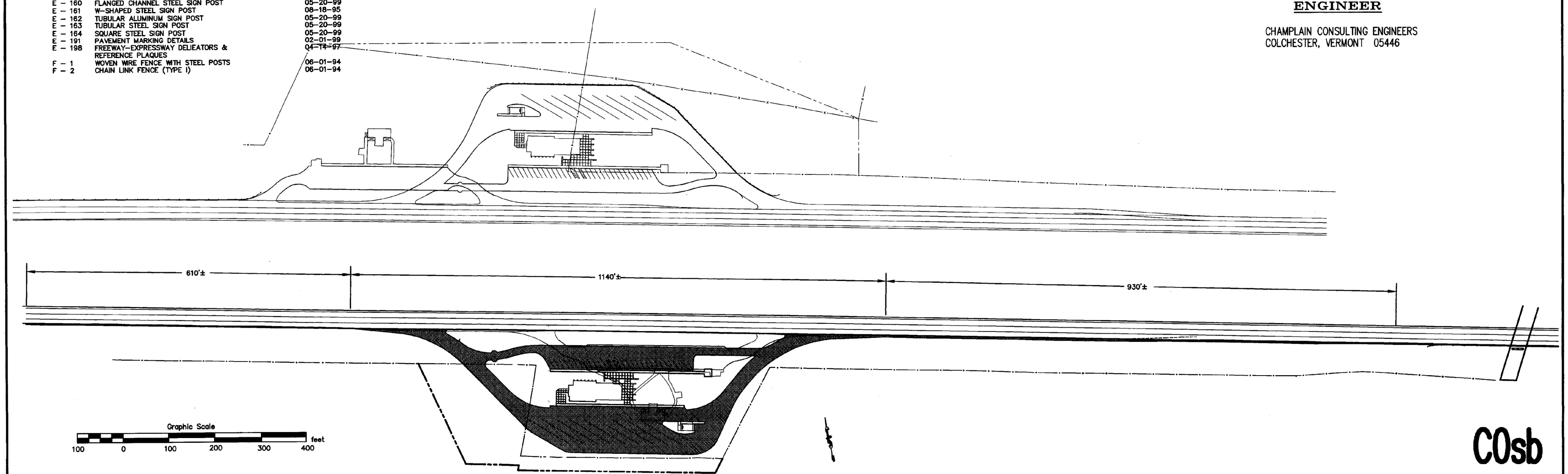

C0sb

C0Z /MLC File:C:\SDSK\PROJ\3314-SBRR\SB-00TITLE.dwg Plotted: 2001-01-15 15:08:44

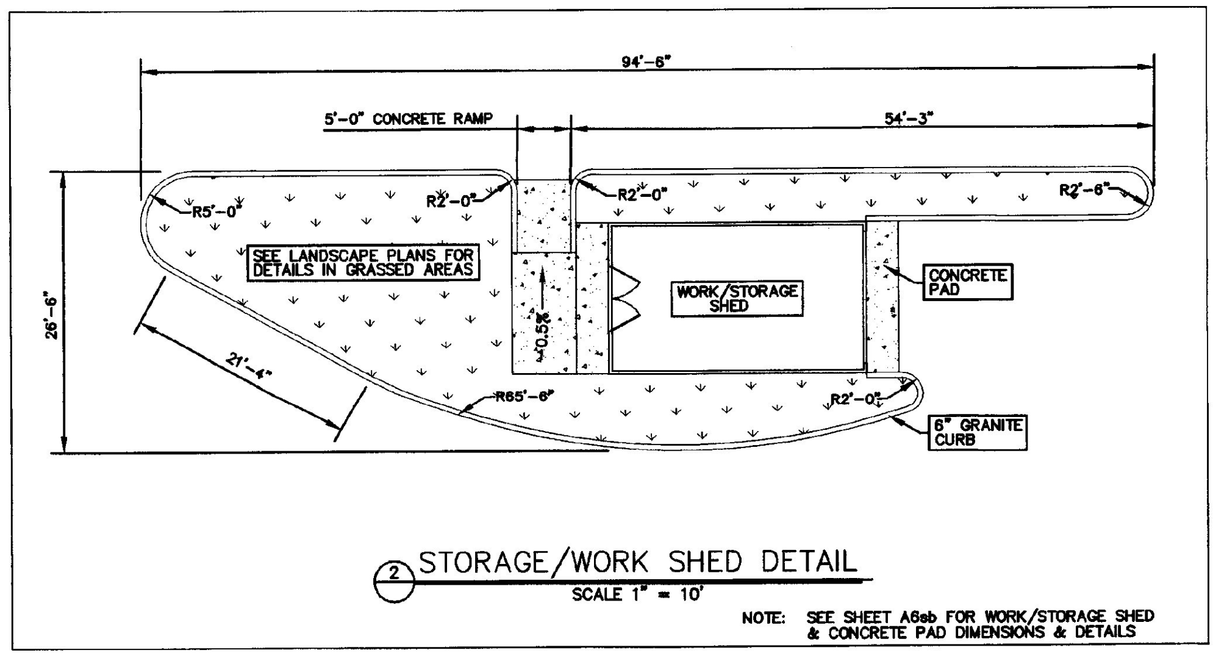

2 STORAGE/WORK SHED DETAIL
SCALE 1" = 10'

NOTE: SEE SHEET A6eb FOR WORK/STORAGE SHED & CONCRETE PAD DIMENSIONS & DETAILS

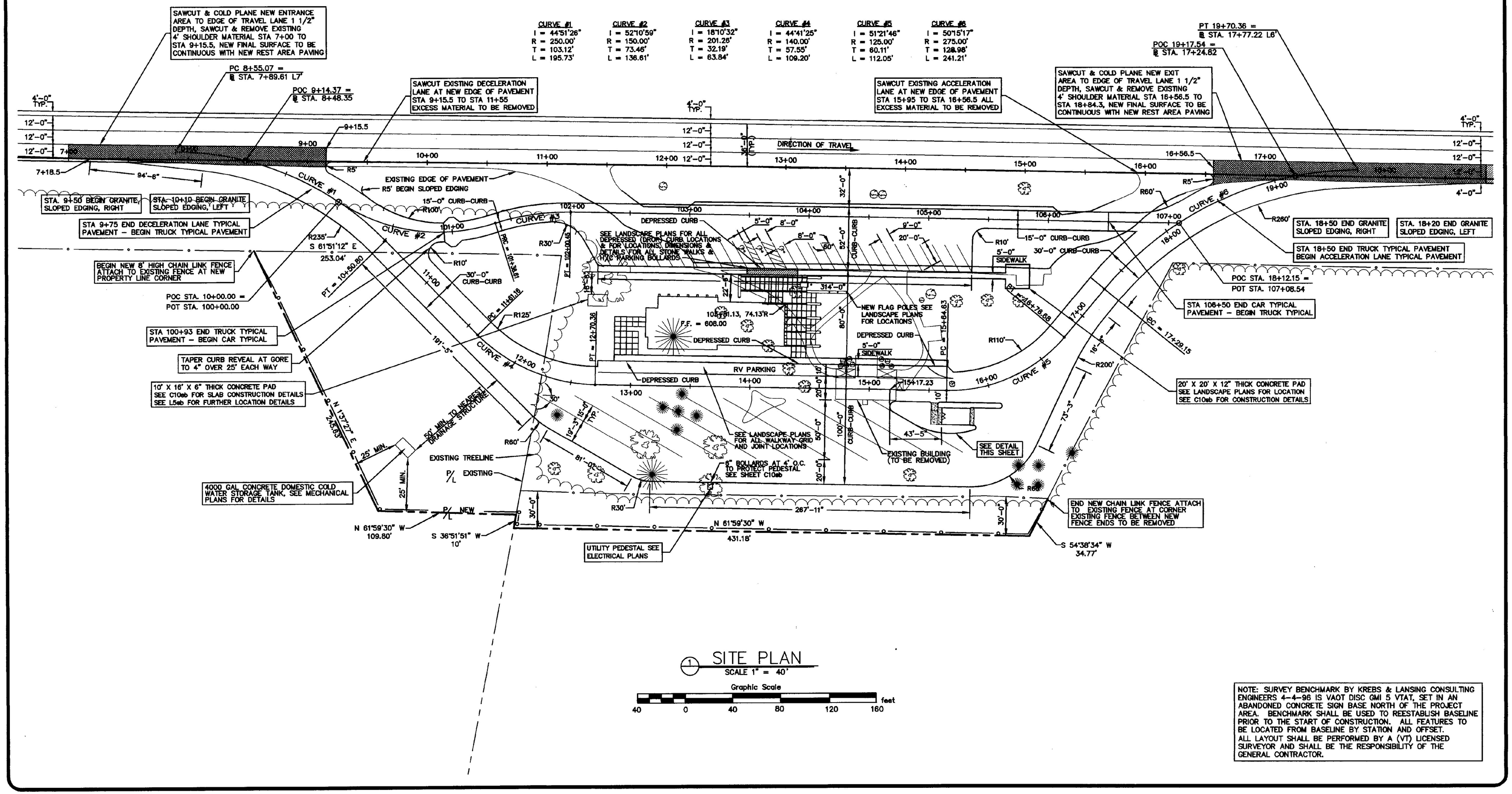

1 SITE PLAN
SCALE 1" = 40'

Graphic Scale
40 0 40 80 120 160 feet

NOTE: SURVEY BENCHMARK BY KREBS & LANSING CONSULTING ENGINEERS 4-4-96 IS VAOT DISC GM 5 VTAT, SET IN AN ABANDONED CONCRETE SIGN BASE NORTH OF THE PROJECT AREA. BENCHMARK SHALL BE USED TO REESTABLISH BASELINE PRIOR TO THE START OF CONSTRUCTION. ALL FEATURES TO BE LOCATED FROM BASELINE BY STATION AND OFFSET. ALL LAYOUT SHALL BE PERFORMED BY A (VT) LICENSED SURVEYOR AND SHALL BE THE RESPONSIBILITY OF THE GENERAL CONTRACTOR.

REVISIONS	BY

COPYRIGHT © 2001
CHAMPLAIN CONSULTING ENGINEERS
ALL RIGHTS RESERVED

CHAMPLAIN CONSULTING ENGINEERS
85 PRIM ROAD, P.O. BOX 453
COLCHESTER, VERMONT 05446
(802) 863-8060
(802) 864-1876 FAX

STATE OF VERMONT PAUL BUCHENAUER No. 3567 REGISTERED PROFESSIONAL ENGINEER

INTERSTATE 89 SOUTHBOUND
WILLISTON INFORMATION CENTER
LAYOUT PLAN

WILLISTON VERMONT
PROJECT # IM-BLDG(4)

DRAWN	CCE
CHECKED	PD
SCALE	1" = 40'
DATE	01/16/01
JOB NO.	93114
SHEET	C1sb
OF	19 SHEETS

CCE/MLC File:C:\JOBS\1993\93114-SB\93138-01sheet.dwg Plotted: 2001-01-15 15:59:38

Boring Log — Hole No. #1 SB

STATE OF VERMONT
AGENCY OF TRANSPORTATION
MATERIALS & RESEARCH DIVISION
SUBSURFACE INFORMATION

Boring Crew — Crew Chief: WARREN; Crew: CHABOT
Sheet 1 of 1 — Date Started 11/19/95 — Date Completed 11/19/95
PROJECT: WILLISTON REST AREA — NO. IRENGR(1)
STRUCTURE IDENTIFICATION: SOUTHBOUND — HOLE NO. #1 SB
STATION ___ OFFSET ___ GROUND EL. ___ G.W. EL. ___

DEPTH BELOW GND. SUR.	BLOWS ON CASING	BLOWS ON SAMPLER 0/6	6/12	12/18	N,Bls/Ft.	MOISTURE	COLOR	FIELD IDENTIFICATION AND REMARKS	LABORATORY CLASSIFICATION OF SOIL	LL	P.I
5		100						NO SAMPLE Bo or Le			
10											
15											

Boring Log — Hole No. #2 SB

STATE OF VERMONT
AGENCY OF TRANSPORTATION
MATERIALS & RESEARCH DIVISION
SUBSURFACE INFORMATION

Boring Crew — Crew Chief: WILLIS; Crew: CHABOT, KELLEY
Sheet 1 of 1 — Date Started 11/17/95 — Date Completed 11/17/95
PROJECT: WILLISTON REST AREA — NO. IRENGR(1)
STRUCTURE IDENTIFICATION: SOUTHBOUND — HOLE NO. #2 SB
STATION ___ OFFSET ___ GROUND EL. ___ G.W. EL. ___

DEPTH BELOW GND. SUR.	BLOWS ON CASING	BLOWS ON SAMPLER 0/6	6/12	12/18	N,Bls/Ft.	MOISTURE	COLOR	FIELD IDENTIFICATION AND REMARKS	LABORATORY CLASSIFICATION OF SOIL	LL	P.I
5											
10		100	for	0.4				No Rec. Advanced Auger in bo or possible rock 10.4'–11.0'			
15											

Hole stopped @ 11.0'

Boring Log — Hole No. #3 SB

STATE OF VERMONT
AGENCY OF TRANSPORTATION
MATERIALS & RESEARCH DIVISION
SUBSURFACE INFORMATION

Boring Crew — Crew Chief: McGLYNN; Crew: KELLEY
Sheet 1 of 1 — Date Started 11/21/95 — Date Completed 11/21/95
PROJECT: WILLISTON REST AREA — NO. IRENGR(1)
STRUCTURE IDENTIFICATION: SOUTHBOUND — HOLE NO. #3 SB
STATION ___ OFFSET ___ GROUND EL. ___ G.W. EL. ___

DEPTH BELOW GND. SUR.	BLOWS ON CASING	BLOWS ON SAMPLER 0/6	6/12	12/18	N,Bls/Ft.	MOISTURE	COLOR	FIELD IDENTIFICATION AND REMARKS	LABORATORY CLASSIFICATION OF SOIL	LL	P.I
5		82				M	Gr	possible soft rock or Le	A-1-a, Sa Gr w=6.3%		
10											

Hole stopped @ 5.5'

Boring Log — Hole No. #4 SB

STATE OF VERMONT
AGENCY OF TRANSPORTATION
MATERIALS & RESEARCH DIVISION
SUBSURFACE INFORMATION

Boring Crew — Crew Chief: WARREN; Crew: CHABOT
Sheet 1 of 1 — Date Started 11/20/95 — Date Completed 11/20/95
PROJECT: WILLISTON REST AREA — NO. IRENGR(1)
STRUCTURE IDENTIFICATION: SOUTHBOUND — HOLE NO. #4 SB
STATION ___ OFFSET ___ GROUND EL. ___ G.W. EL. ___

DEPTH BELOW GND. SUR.	BLOWS ON CASING	BLOWS ON SAMPLER 0/6	6/12	12/18	N,Bls/Ft.	MOISTURE	COLOR	FIELD IDENTIFICATION AND REMARKS	LABORATORY CLASSIFICATION OF SOIL	LL	P.I
5		5 / 51	30	34	64	Dry	Brn	Si Cl HP, Rec 1.8	A-4, Si w=9.5%		
10		12 / 100	50	60	R	Dry	Brn	Si HP, Rec 1.8	A-1-b, Gr Sa w=9.5%		

Hole stopped @ 12.0'

Boring Log — Hole No. #5 SB

STATE OF VERMONT
AGENCY OF TRANSPORTATION
MATERIALS & RESEARCH DIVISION
SUBSURFACE INFORMATION

Boring Crew — Crew Chief: WILLIS; Crew: CHABOT, KELLEY
Sheet 1 of 1 — Date Started 11/16/95 — Date Completed 11/16/95
PROJECT: WILLISTON REST AREA — NO. IRENGR(1)
STRUCTURE IDENTIFICATION: SOUTHBOUND — HOLE NO. #5 SB
STATION ___ OFFSET ___ GROUND EL. ___ G.W. EL. ___

DEPTH BELOW GND. SUR.	BLOWS ON CASING	BLOWS ON SAMPLER 0/6	6/12	12/18	N,Bls/Ft.	MOISTURE	COLOR	FIELD IDENTIFICATION AND REMARKS	LABORATORY CLASSIFICATION OF SOIL	LL	P.I
5		20	18	50	68	M	Gr	Soft Bo's + Sa. Advanced auger through large Bo or bedrock 6.5'–9.0'	A-1-b, Sa Gr w=11.4%		
10											
15											

Hole stopped @ 9.0'

Boring Log — Hole No. #6 SB

STATE OF VERMONT
AGENCY OF TRANSPORTATION
MATERIALS & RESEARCH DIVISION
SUBSURFACE INFORMATION

Boring Crew — Crew Chief: WILLIS; Crew: CHABOT, KELLEY
Sheet 1 of 1 — Date Started 11/16/95 — Date Completed 11/16/95
PROJECT: WILLISTON REST AREA — NO. IRENGR(1)
STRUCTURE IDENTIFICATION: SOUTHBOUND — HOLE NO. #6 SB
STATION ___ OFFSET ___ GROUND EL. ___ G.W. EL. ___

DEPTH BELOW GND. SUR.	BLOWS ON CASING	BLOWS ON SAMPLER 0/6	6/12	12/18	N,Bls/Ft.	MOISTURE	COLOR	FIELD IDENTIFICATION AND REMARKS	LABORATORY CLASSIFICATION OF SOIL	LL	P.I
5		4 / 8	11	7	18	M	Brn	Sa Si, Rec 1.0	A-4, Gr Sa Si w=13.9%		
10		20 / 56	32	44	76	Dry	Brn	Hd. Pkd. Sa Gr, Rec 1.7	A-4, Gr Sa Si w=9.3%		
15		32	53	44	97	Dry	Gr	Hd. Pkd. Sa Gr, Rec 1.5	A-4, Sa Si w=9.8%		
20		23	52	47for.02		Dry	Gr	Hd. Pkd. Sa Gr, Rec 1.0	A-4, Sa Gr Si w=13.6%		

Hole stopped @ 21.2'

Boring Log — Hole No. #7 SB

STATE OF VERMONT
AGENCY OF TRANSPORTATION
MATERIALS & RESEARCH DIVISION
SUBSURFACE INFORMATION

Boring Crew — Crew Chief: McGLYNN; Crew: WARREN
Sheet 1 of 1 — Date Started ___ — Date Completed ___
PROJECT: WILLISTON REST AREA — NO. IRENGR(1)
STRUCTURE IDENTIFICATION: SOUTHBOUND — HOLE NO. #7 SB
STATION ___ OFFSET ___ GROUND EL. ___ G.W. EL. ___

DEPTH BELOW GND. SUR.	BLOWS ON CASING	BLOWS ON SAMPLER 0/6	6/12	12/18	N,Bls/Ft.	MOISTURE	COLOR	FIELD IDENTIFICATION AND REMARKS	LABORATORY CLASSIFICATION OF SOIL	LL	P.I
								Le or Bo			
5											
10											

Hole stopped @ 1.8'

Boring Log — Hole No. #8 SB

STATE OF VERMONT
AGENCY OF TRANSPORTATION
MATERIALS & RESEARCH DIVISION
SUBSURFACE INFORMATION

Boring Crew — Crew Chief: McGLYNN; Crew: KELLEY
Sheet 1 of 1 — Date Started 11/21/95 — Date Completed 11/21/95
PROJECT: WILLISTON REST AREA — NO. IRENGR(1)
STRUCTURE IDENTIFICATION: SOUTHBOUND — HOLE NO. #8 SB
STATION ___ OFFSET ___ GROUND EL. ___ G.W. EL. ___

DEPTH BELOW GND. SUR.	BLOWS ON CASING	BLOWS ON SAMPLER 0/6	6/12	12/18	N,Bls/Ft.	MOISTURE	COLOR	FIELD IDENTIFICATION AND REMARKS	LABORATORY CLASSIFICATION OF SOIL	LL	P.I
5		112				M	Gr	Possible Le or Bo	A-1-a, Gr Sa w=2.2%		
10											
15											

Hole stopped @ 5.5'

INDIVIDUAL LOCATIONS FOR BORING NUMBERS 1–8 PERFORMED BY VOAT NOV. 1995, UNKNOWN

SPECIALTY DRILLING & INVESTIGATION — Boring Number 9

P.O. Box 64709 Burlington, VT 05406–4709
Tel: 802–658–0820
Fax: 802–860–1014

Project Name: CCE Williston Rest Area
Project Location: Williston, Vermont
Boring Number: 9
Sheet 1 of 1
SDI project Number: 99929

Boring Location: B1 — Date Started: 7/29/99 — Rig Hours Meter Start: 627.5 Time: 7:50 AM
Foreman: Chris Aldrich
H&N Staff: Chris Aldrich — Date Completed: 7/29/99 — Rig Hours Meter End: 628.9 Time: 10:05 AM
Sampling Method: Split Spoon — Direct Push — Other
Size: ___ Size: ___ Type: ___
Hammer: ___
Fall: ___
Groundwater Readings: Date / Time / Depth / Casing / Stabil.

No.	Recovery	Depth	Blows	Sample Description	Strata Change & General Description	Field Testing PID	Equipment or Well Installed
1	14"	0–2	10,20, 20,18	3" Topsoil, then yellow/brown, sandy till, some fill.	Dry	N/A	None
2	17"	2–4	12,14, 18,13	Yellow/brown, sandy till.	Moist	N/A	Backfill with native fill.
3	18"	4–5	7,9,11, 14	As above.	Moist	N/A	
4	18"	6–8	17,56 75 & 45 for 2"	As above and bedrock in tip?	Moist	N/A	
5	9"	8–8.75	60,100 for 3"	5" of yellow/gray/brown, sandy till, then bedrock chips.	Wet Dry	N/A	
				End of boring.			

Proportions Used: Trace: 0 to 10%; Little: 10 to 20%; Some: 20 to 35%; And: 35 to 50%

Penetration Resistance: 140 lb. wt falling 30" on 2" O.D.Sampler

Cohesive Density		Cohesive Consistency	
0–4	Very Loose	0–2	Very Soft
5–9	Loose	3–4	Soft
10–29	Med. Dense	5–8	M/Stiff
30–49	Dense	9–15	Stiff
50+	Very Dense	16–30	Very Stiff
		31+	Hard

Well Construction Details: 2" PVC Screen (0.20): Sand: ; 2" PVC Riser: Concrete: ; Plug/Cap: Bentonite chips: ; Filter Sock: Well Guard:

NA = Not Applicable

SPECIALTY DRILLING & INVESTIGATION — Boring Number 10

P.O. Box 64709 Burlington, VT 05406–4709
Tel: 802–658–0820
Fax: 802–860–1014

Project Name: CCE Williston Rest Area
Project Location: Williston, Vermont
Boring Number: 10
Sheet 1 of 1
SDI project Number: 99929

Boring Location: B1 — Date Started: 7/29/99 — Rig Hours Meter Start: 628.9 Time: 10:15 AM
Foreman: Chris Aldrich
H&N Staff: Chris Aldrich — Date Completed: 7/29/99 — Rig Hours Meter End: 630.3 Time: 11:35 AM
Sampling Method: Split Spoon — Direct Push — Other
Size: ___ Size: ___ Type: ___
Hammer: ___
Fall: ___
Groundwater Readings: Date / Time / Depth / Casing / Stabil.

No.	Recovery	Depth	Blows	Sample Description	Strata Change & General Description	Field Testing PID	Equipment or Well Installed
1	11"	0–2	4,6,7,11	2" topsoil then dark brown sandy till.	Dry	N/A	None
2	14"	2–4	11,9,18,17	As above to 3.5' then yellow/ brown sandy till.	Dry	N/A	Native backfill
3	12"	4–6	13,26, 48,65	5" as above then bedrock chips.	Dry	N/A	
4	11"	6–7	43,105	Weathered bedrock, flaky, talc, foliated.	Dry	N/A	
5	ND	7–7.15	100 for 2"	1" bedrock chunks.	Dry	N/A	
				End of boring.			

Proportions Used: Trace: 0 to 10%; Little: 10 to 20%; Some: 20 to 35%; And: 35 to 50%

Penetration Resistance: 140 lb. wt falling 30" on 2" O.D.Sampler

Cohesive Density		Cohesive Consistency	
0–4	Very Loose	0–2	Very Soft
5–9	Loose	3–4	Soft
10–29	Med. Dense	5–8	M/Stiff
30–49	Dense	9–15	Stiff
50+	Very Dense	16–30	Very Stiff
		31+	Hard

Well Construction Details: 2" PVC Screen (0.20): Sand: ; 2" PVC Riser: Concrete: ; Plug/Cap: Bentonite chips: ; Filter Sock: Well Guard:

NA = Not Applicable

SPECIALTY DRILLING & INVESTIGATION — Boring Number 11

P.O. Box 64709 Burlington, VT 05406–4709
Tel: 802–658–0820
Fax: 802–860–1014

Project Name: CCE Williston Rest Area
Project Location: Williston, Vermont
Boring Number: 11
Sheet 1 of 1
SDI project Number: 99929

Boring Location: B1 — Date Started: 7/29/99 — Rig Hours Meter Start: 630.3 Time: 12:05 PM
Foreman: Chris Aldrich
H&N Staff: Chris Aldrich — Date Completed: 7/29/99 — Rig Hours Meter End: 631.3 Time: 1:20 PM
Sampling Method: Split Spoon — Direct Push — Other
Size: ___ Size: ___ Type: ___
Hammer: ___
Fall: ___
Groundwater Readings: Date / Time / Depth / Casing / Stabil.

No.	Recovery	Depth	Blows	Sample Description	Strata Change & General Description	Field Testing PID	Equipment or Well Installed
1	13"	0–2	3,7,11,16	3" topsoil then sandy till.	Dry	N/A	None
2	16"	2–4	25,18 20,24	6" as above then yellow/gray sandy till.	Dry	N/A	Native backfill
3	14"	4–5.5	18,40 150	6" as above then 8" of weathered bedrock.	Dry	N/A	
				End of boring.			

Proportions Used: Trace: 0 to 10%; Little: 10 to 20%; Some: 20 to 35%; And: 35 to 50%

Penetration Resistance: 140 lb. wt falling 30" on 2" O.D.Sampler

Cohesive Density		Cohesive Consistency	
0–4	Very Loose	0–2	Very Soft
5–9	Loose	3–4	Soft
10–29	Med. Dense	5–8	M/Stiff
30–49	Dense	9–15	Stiff
50+	Very Dense	16–30	Very Stiff
		31+	Hard

Well Construction Details: 2" PVC Screen (0.20): Sand: ; 2" PVC Riser: Concrete: ; Plug/Cap: Bentonite chips: ; Filter Sock: Well Guard:

NA = Not Applicable

LEDGE PROBE DEPTHS

NO.	DEPTH
1	10'
2	6'
3	8.5'
4	8.5'
5	12'
6	14.5'
7	8.5'
8	19'
9	13'
10	9.5'
11	10.5'
12	8'
13	3.5'

SEE C4sb

REVISIONS | BY

COPYRIGHT © 2001 CHAMPLAIN CONSULTING ENGINEERS ALL RIGHTS RESERVED

CHAMPLAIN CONSULTING ENGINEERS
85 PRIM ROAD, P.O. BOX 453
COLCHESTER, VERMONT 05446
(802) 863-8060
(802) 864-1878 FAX

STATE OF VERMONT — PAUL DUCHESNEAU — No. 3567 — REGISTERED PROFESSIONAL ENGINEER

INTERSTATE 89 SOUTHBOUND
WILLISTON INFORMATION CENTER
SOIL BORINGS

PROJECT # IM-BLDG(4)
WILLISTON — VERMONT

DRAWN: CCE
CHECKED: PD
SCALE: NONE
DATE: 01/16/01
JOB NO.: 93114
SHEET: C2sb OF 19 SHEETS

CCE//MLC File: C:\SDSK\PROJ\93114-SB99\SB-02sheet.dwg Plotted: 2001-01-15 15:10:23

FOR ELECTRICAL INSTALLATION NOTES
SEE DRAWING E1sb PROJECT NO. 10215.00
BY HALLAM ASSOCIATES

LIGHT POLE & LUMINAIRE
EXISTING LIGHTING (TYPICAL)

NEW SANITARY MANHOLE, SMH1
RIM ELEVATION 597.00
INV. IN 584.15
INV. OUT 583.97

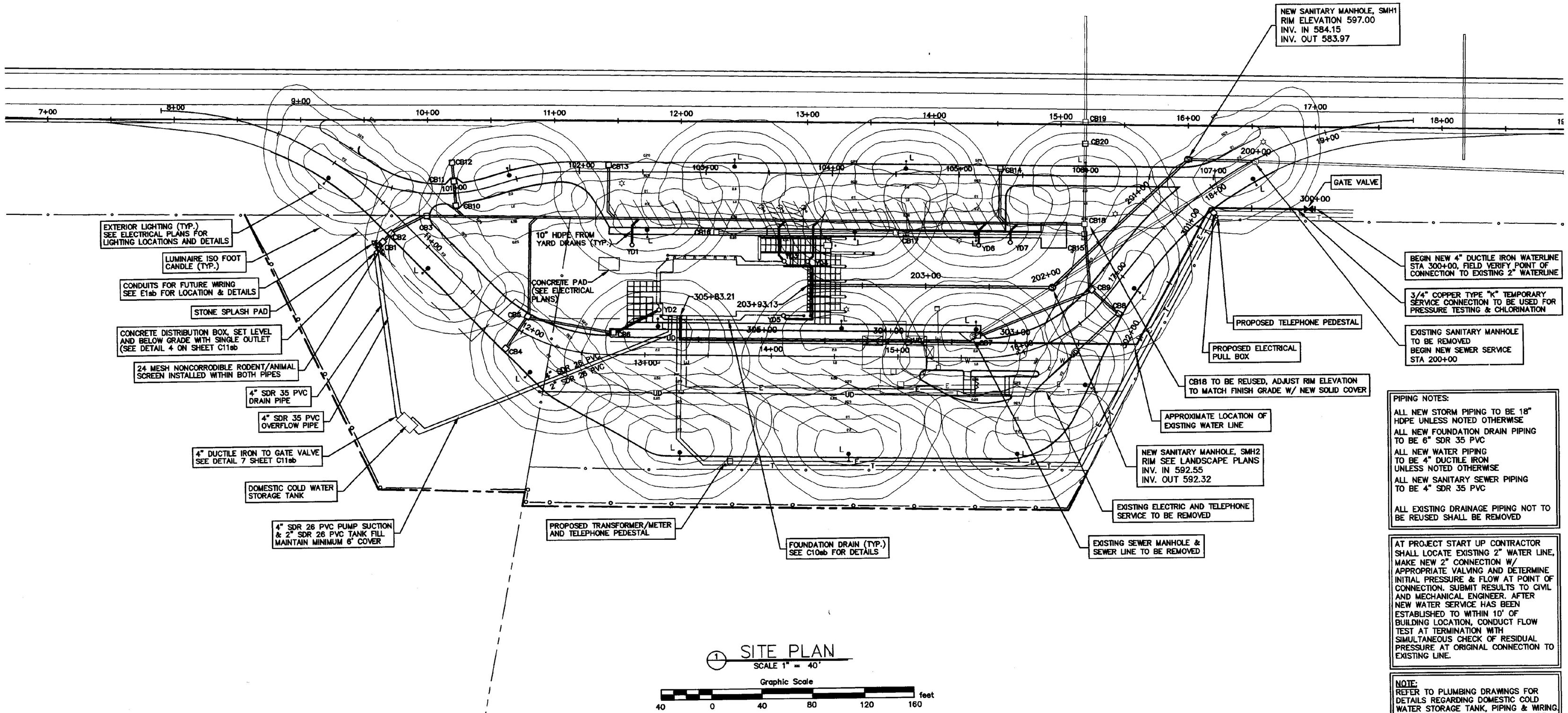

1 SITE PLAN
SCALE 1" = 40'

Graphic Scale
40 0 40 80 120 160 feet

PIPING NOTES:

ALL NEW STORM PIPING TO BE 18" HDPE UNLESS NOTED OTHERWISE

ALL NEW FOUNDATION DRAIN PIPING TO BE 6" SDR 35 PVC

ALL NEW WATER PIPING TO BE 4" DUCTILE IRON UNLESS NOTED OTHERWISE

ALL NEW SANITARY SEWER PIPING TO BE 4" SDR 35 PVC

ALL EXISTING DRAINAGE PIPING NOT TO BE REUSED SHALL BE REMOVED

AT PROJECT START UP CONTRACTOR SHALL LOCATE EXISTING 2" WATER LINE, MAKE NEW 2" CONNECTION W/ APPROPRIATE VALVING AND DETERMINE INITIAL PRESSURE & FLOW AT POINT OF CONNECTION. SUBMIT RESULTS TO CIVIL AND MECHANICAL ENGINEER. AFTER NEW WATER SERVICE HAS BEEN ESTABLISHED TO WITHIN 10' OF BUILDING LOCATION, CONDUCT FLOW TEST AT TERMINATION WITH SIMULTANEOUS CHECK OF RESIDUAL PRESSURE AT ORIGINAL CONNECTION TO EXISTING LINE.

NOTE:
REFER TO PLUMBING DRAWINGS FOR DETAILS REGARDING DOMESTIC COLD WATER STORAGE TANK, PIPING & WIRING. THE GENERAL CONTRACTOR SHALL BE RESPONSIBLE FOR COORDINATING THE SCOPE OF ALL SITE, PLUMBING & ELECTRICAL SUBCONTRACTING WORK.

REVISIONS	BY

COPYRIGHT © 2001
CHAMPLAIN CONSULTING ENGINEERS
ALL RIGHTS RESERVED

CHAMPLAIN CONSULTING ENGINEERS
85 PRIM ROAD, P.O. BOX 453
COLCHESTER, VERMONT 05446
(802) 863-8060
(802) 864-1878 FAX

STATE OF VERMONT
PAUL DUCHESNEAU
No. 3567
REGISTERED
PROFESSIONAL ENGINEER

INTERSTATE 89 SOUTHBOUND
WILLISTON INFORMATION CENTER
UTILITY PLAN
WILLISTON VERMONT
PROJECT # IM-BLDG(4)

DRAWN	CCE
CHECKED	PD
SCALE	1" = 40'
DATE	01/16/01
JOB NO.	93114
SHEET	C3sb
OF	19 SHEETS

CCE/JMC File: C:\SOK\PROJ\93114-3399\SB-3Sheet.dwg Plotted: 2001-01-15 15:10:02

DRAINAGE STRUCTURES

NO.	STATION		TYPE	RIM	INVERT (IN)	INVERT (OUT)	REMARKS
CB1	10+72,RT.			601.36		596.78	
CB2	10+72,RT.			602.22	596.62	596.46	
CB3	10+82,LT.			602.23	596.13	595.96	
CB4	11+97,RT.			604.29		599.57	
CB5	11+97,LT.			604.39	599.25, 599.25	599.08	
CB6	12+75,LT.			605.60	601.06	600.89	
CB7	15+84,LT.			602.85	598.10(UD)	597.93	
CB8	16+76,RT.			599.55	597.04(UD)	596.87	
CB9	16+77,LT.			599.61	596.29, 596.29	596.12	
CB10	101+00,RT.			601.78	595.96	595.80	
CB11	101+00,LT.			601.78	596.46	596.29	
CB12	101+00,LT.			602.50		596.62	
CB13	102+23,LT.			604.00		598.43	
CB14	105+33,LT.			602.03		595.47	
CB15	105+99,RT.			595.25	591.55	590.46	EXISTING TO BE REMOVED
CB16	103+08,RT.			600.69		598.79	EXISTING TO BE REMOVED
CB17	104+50,RT.			599.49	595.62, 596.77	595.09	EXISTING TO BE REMOVED
CB18	105+99,RT.			†595.80	590.55, 590.55	589.71	EXISTING TO BE REUSED
CB19	105+98,LT.			597.88	587.80	587.66	EXISTING TO REMAIN
CB20	105+99,LT.			598.30	588.25	588.12	NEW OVER EXIST. PIPE
YD1	102+42,RT.		*			600.75	10" HDPE
YD2	13+11,LT.		*		601.20	601.10	10" HDPE
YD3	103+82,RT.		*		596.00(FD), 596.00(FD)	595.60	10" HDPE
YD4	103+81,RT.		*		595.71	595.37	10" HDPE
YD5	14+09,LT.		*		601.80(FD), 601.80(FD)	601.70	10" HDPE
YD6	105+16,RT.		*			599.25	10" HDPE
YD7	105+41,RT.		*			599.00	10" HDPE

* SEE LANDSCAPE PLANS FOR YARD DRAIN RIM ELEVATIONS

† CATCH BASIN TO BECOME DRAINAGE MANHOLE, RAISE RIM ELEVATION TO 604.75 WITH NEW SOLID COVER LABELED "STORM".

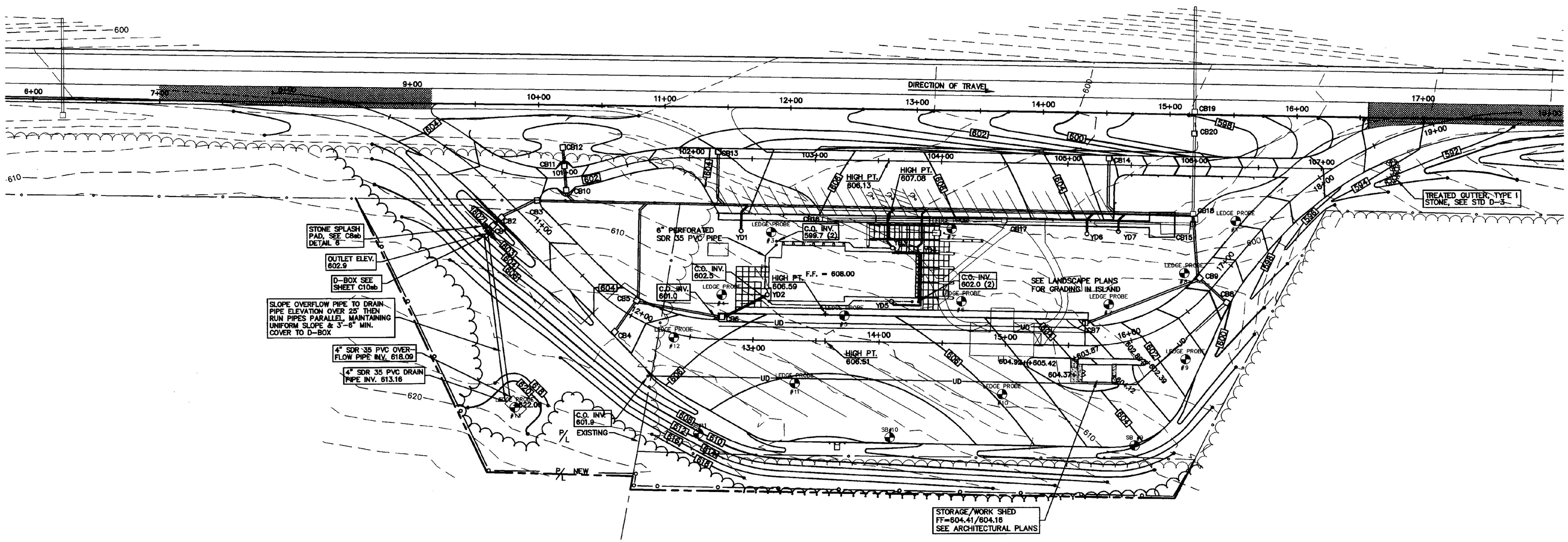

1 SITE PLAN
SCALE 1" = 40'

Graphic Scale
40 0 40 80 120 160 feet

NOTES:

1. CONTRACTOR SHALL BE RESPONSIBLE FOR DETERMINATION OF EXTENT OF LEDGE REMOVAL REQUIRED AND FOR THE ADHERENCE TO ALL FEDERAL, STATE & LOCAL LAWS, REGULATIONS & ORDINANCES REGARDING LEDGE REMOVAL METHODS & PROCEDURES. A LEDGE REMOVAL PLAN SHALL BE SUBMITTED TO THE OWNER FOR APPROVAL PRIOR TO ANY LEDGE REMOVAL OPERATION

2. CONTRACTOR SHALL BE RESPONSIBLE FOR REMOVAL & PROPER DISPOSAL OF ALL EXISTING BUILDINGS & FEATURES NOT TO BE RETAINED. SEE ELECTRICAL & MECHANICAL PLANS REGARDING REMOVAL & DISPOSAL OF EXISTING UTILITIES.

3. CONTRACTOR SHALL SUBMIT A WRITTEN PLAN TO THE VAOT AND THE OWNER REGARDING THE CONTROL OF DUST AND DEBRIS. NO DUST, MUD OR DEBRIS SHALL BE ALLOWED TO CONTAMINATE THE TRAVEL LANES.

REVISIONS	BY

COPYRIGHT © 2001
CHAMPLAIN CONSULTING ENGINEERS
ALL RIGHTS RESERVED

CHAMPLAIN CONSULTING ENGINEERS
85 PRIM ROAD, P.O. BOX 453
COLCHESTER, VERMONT 05446
(802) 863-8060
(802) 864-1878 FAX

STATE OF VERMONT · PAUL DUCHESNEAU · No.3567 · REGISTERED PROFESSIONAL ENGINEER

INTERSTATE 89 SOUTHBOUND
WILLISTON INFORMATION CENTER
GRADING PLAN
PROJECT # IM-BLDG(4)
WILLISTON VERMONT

DRAWN	CCE
CHECKED	PD
SCALE	1" = 40'
DATE	01/16/01
JOB NO.	93114
SHEET	C4sb

OF 19 SHEETS

D2/JMC File:C:\SIGX\P93\93114-SB99\SB-04sheet.dwg Plotted: 2001-01-15 15:15

CAR PARKING PROFILE

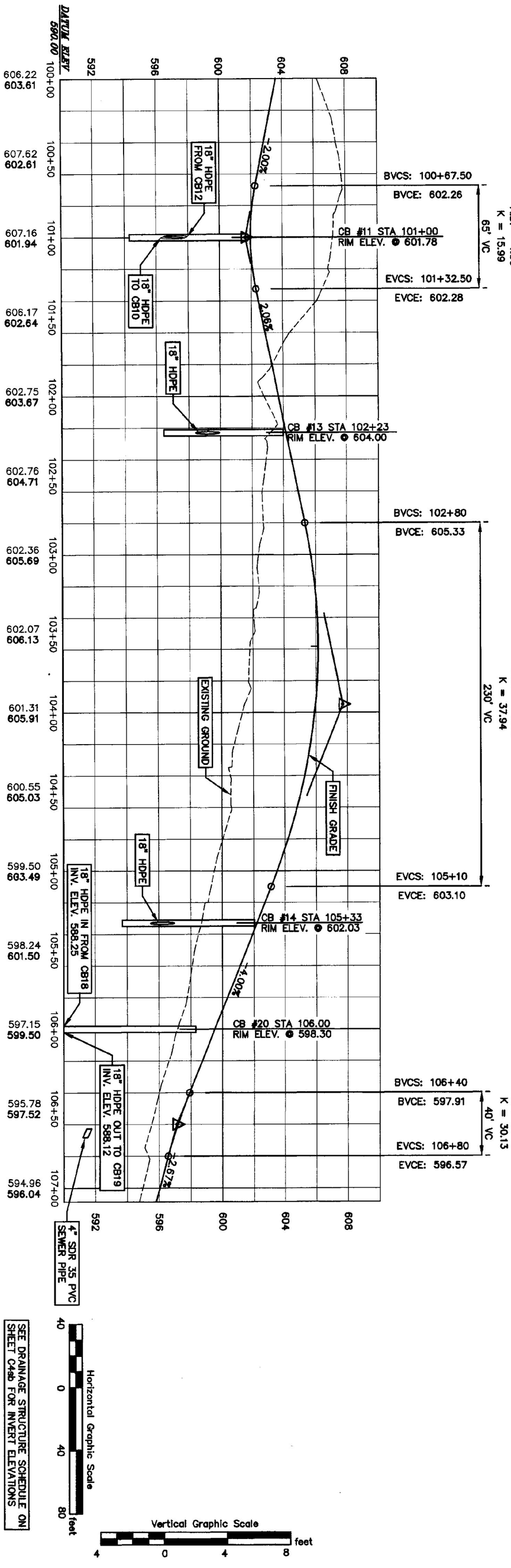

TRUCK PARKING PROFILE

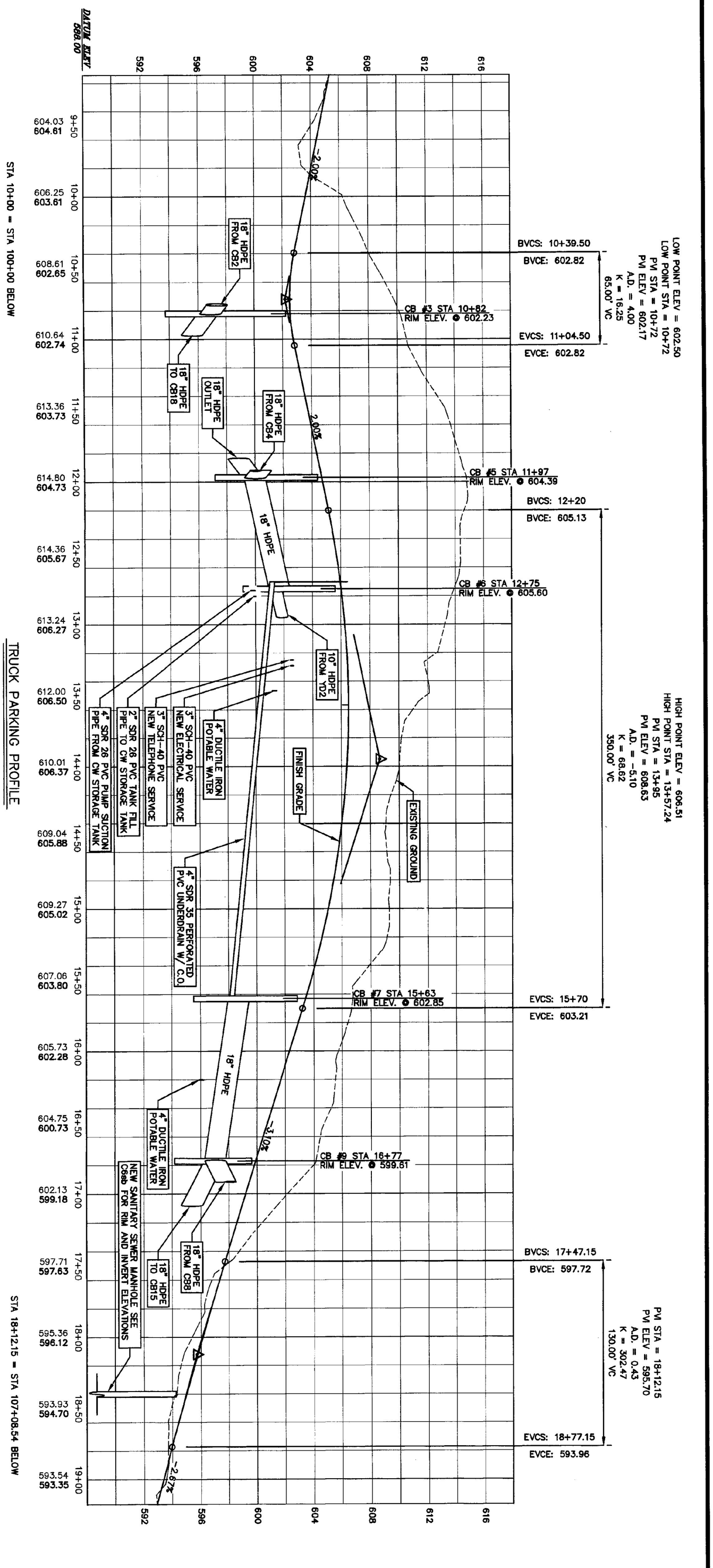

C5sb
SHEET 19 OF SHEETS

DRAWN CCE
CHECKED PD
SCALE AS NOTED
DATE 01/16/01
JOB NO. 93114

INTERSTATE 89 SOUTHBOUND
WILLISTON INFORMATION CENTER
ACCESS DRIVE PROFILES

PROJECT # IM-BLDG(4)

WILLISTON VERMONT

STATE OF VERMONT PAUL DUGHI SEARS No.3567 REGISTERED PROFESSIONAL ENGINEER

CHAMPLAIN CONSULTING ENGINEERS
85 PRIM ROAD, P.O. BOX 453
COLCHESTER, VERMONT 05446
(802) 863-8060
(802) 864-1878 FAX

COPYRIGHT © 2001 CHAMPLAIN CONSULTING ENGINEERS ALL RIGHTS RESERVED

REVISIONS BY

WATER PROFILE

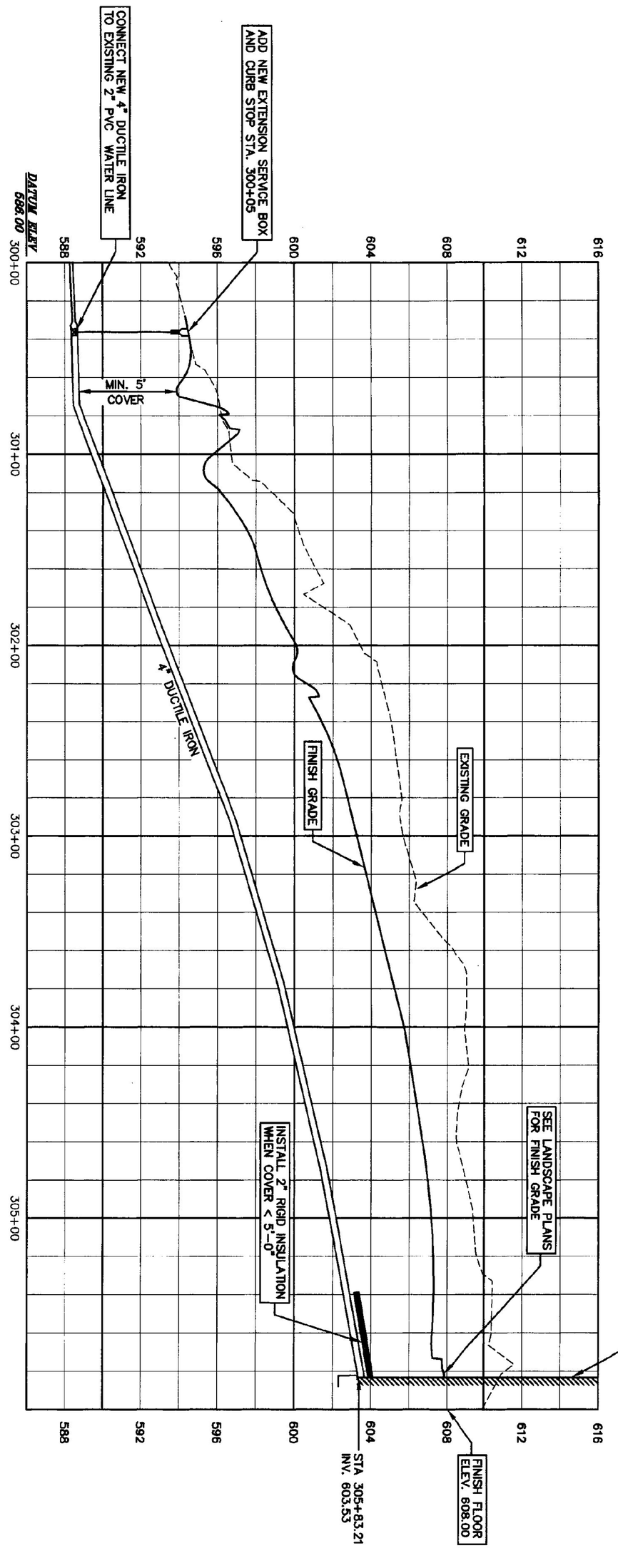

SEWER PROFILE

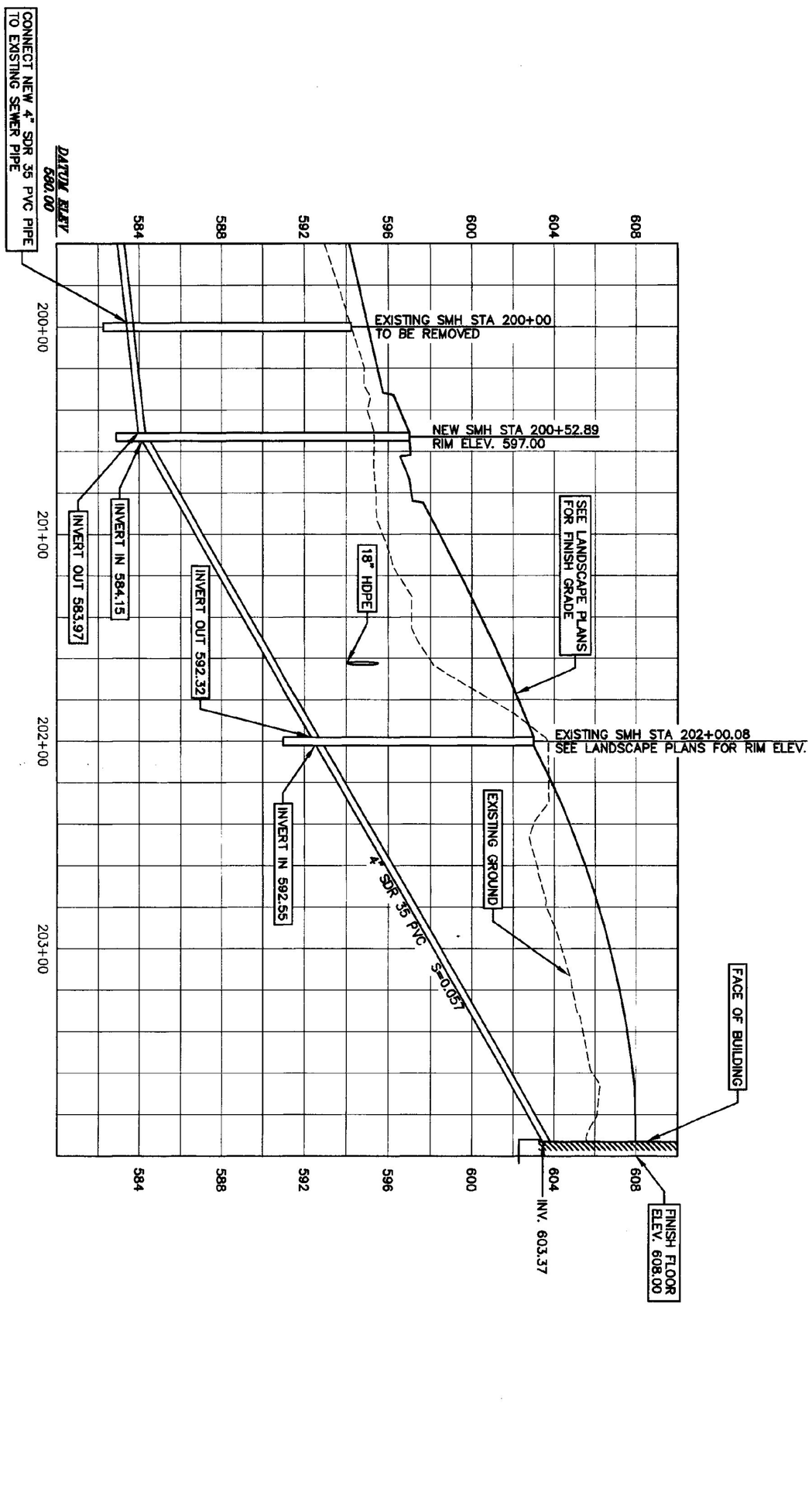

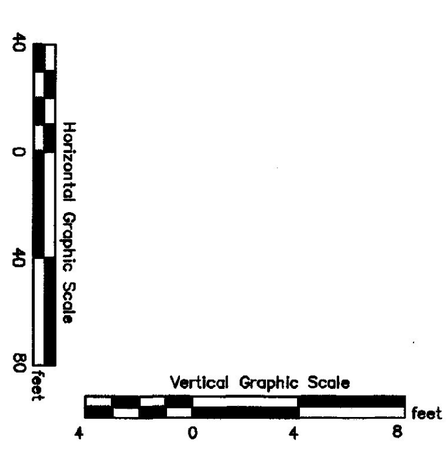

C6sb

OF 19 SHEETS

DRAWN CCE
CHECKED PD
SCALE AS NOTED
DATE 01/16/01
JOB NO. 93114
SHEET

INTERSTATE 89 SOUTHBOUND
WILLISTON INFORMATION CENTER
WATER & SEWER PROFILES

WILLISTON PROJECT # IM-BLDG(4) VERMONT

STATE OF VERMONT PAUL DUCHESNEAU NO.3567 REGISTERED PROFESSIONAL ENGINEER

CHAMPLAIN CONSULTING ENGINEERS
85 PRIM ROAD, P.O. BOX 453
COLCHESTER, VERMONT 05446
(802) 863-8060
(802) 864-1878 FAX

COPYRIGHT © 2001 CHAMPLAIN CONSULTING ENGINEERS ALL RIGHTS RESERVED

REVISIONS BY

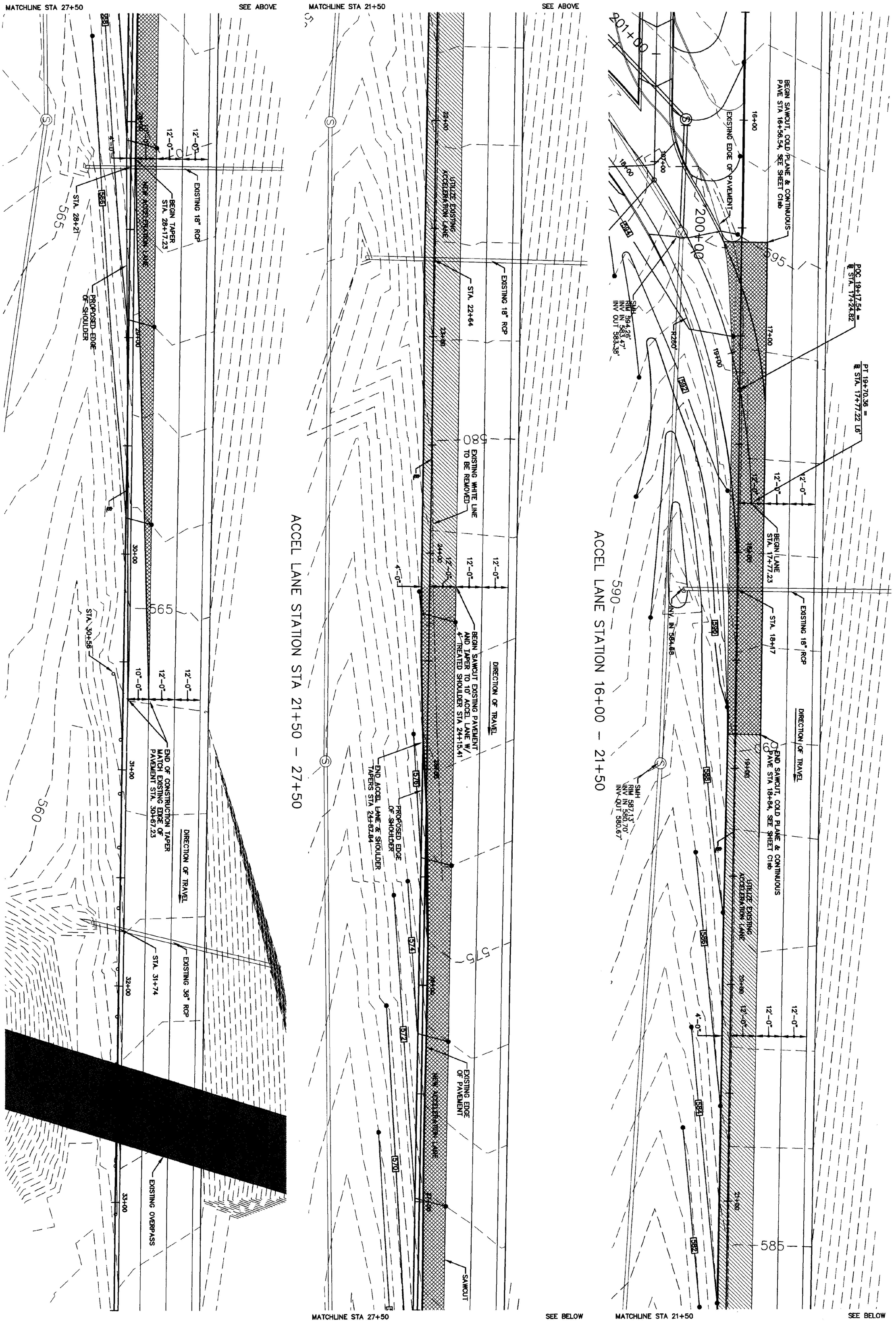

PARTIAL SITE PLANS

SCALE 1" = 20'

Graphic Scale

20 0 20 40 60 80 feet

C7sp

DRAWN CCE
CHECKED PD
SCALE 1" = 20'
DATE 01/16/01
JOB NO. 93114
SHEET C7sp OF 19 SHEETS

INTERSTATE 89 SOUTHBOUND
WILLISTON INFORMATION CENTER
ACCELERATION LANE PLAN

WILLISTON PROJECT # IM-BLDG(4) VERMONT

STATE OF VERMONT PAUL DUCHESNEAU No. 3567 REGISTERED PROFESSIONAL ENGINEER

CHAMPLAIN CONSULTING ENGINEERS
85 PRIM ROAD, P.O. BOX 453
COLCHESTER, VERMONT 05446
(802) 863-8060
(802) 864-1878 FAX

COPYRIGHT © 2001 CHAMPLAIN CONSULTING ENGINEERS ALL RIGHTS RESERVED

REVISIONS BY

② PROFILE

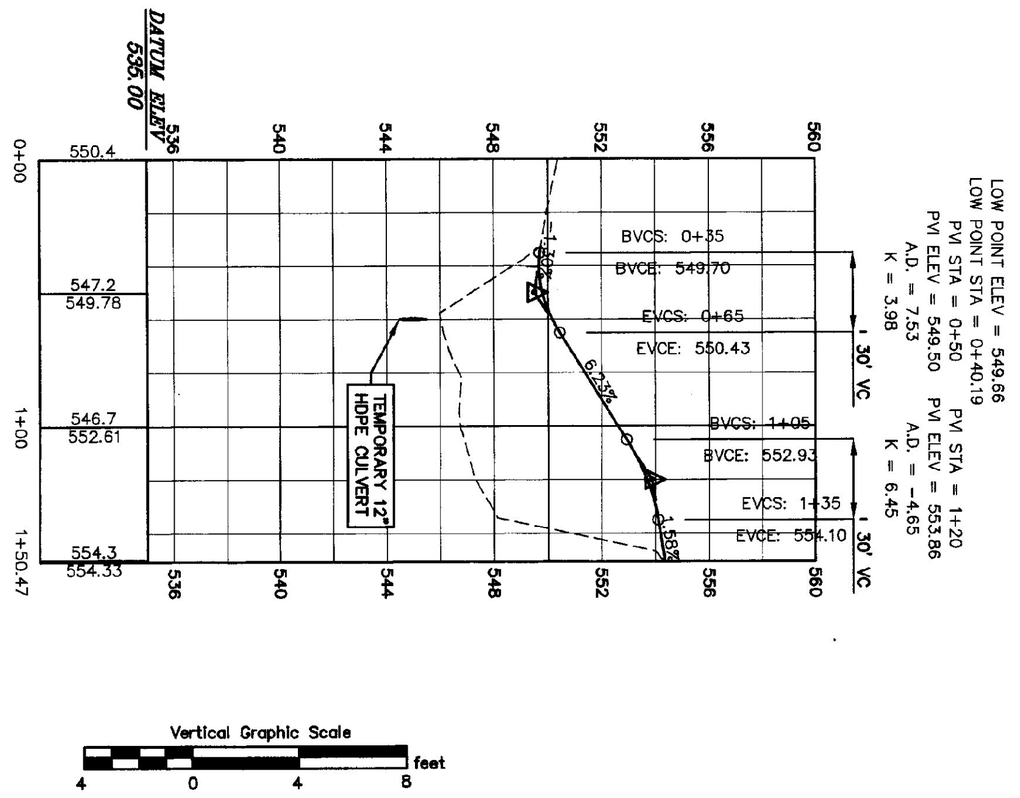

① SITE PLAN

SCALE: 1" = 40'

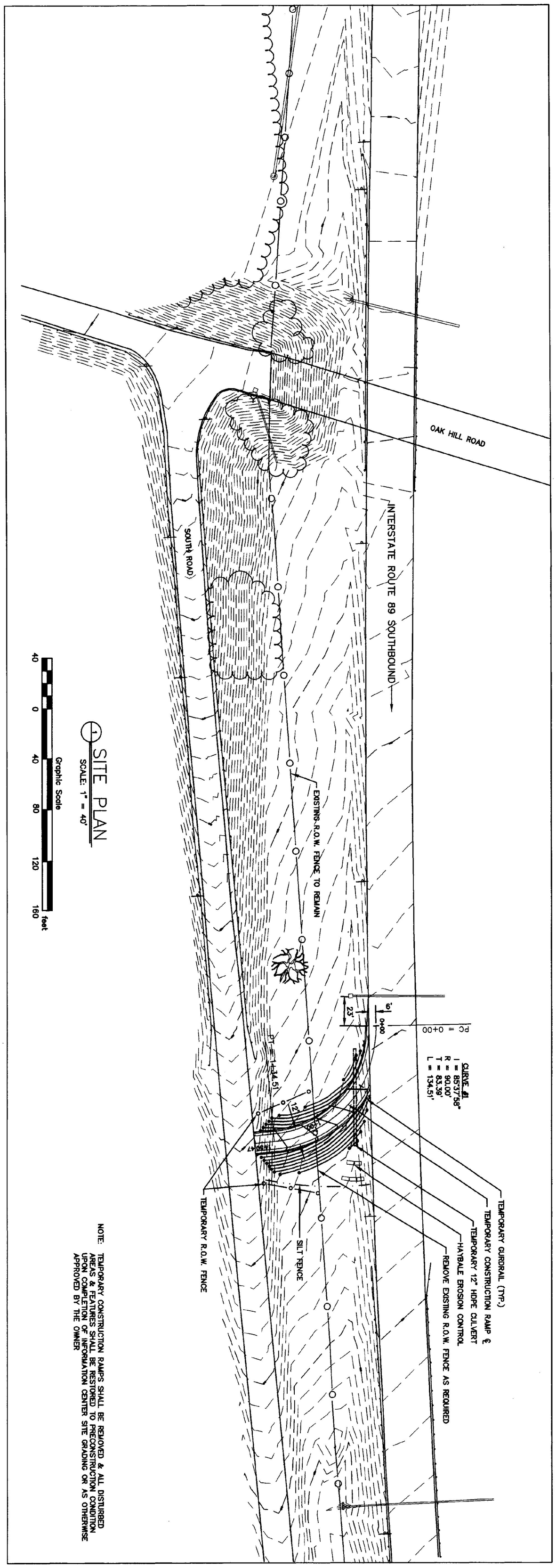

NOTE: TEMPORARY CONSTRUCTION RAMPS SHALL BE REMOVED & ALL DISTURBED AREAS & FEATURES SHALL BE RESTORED TO PRECONSTRUCTION CONDITION UPON COMPLETION OF INFORMATION CENTER SITE GRADING OR AS OTHERWISE APPROVED BY THE OWNER

③ TYPICAL SECTION

NTS

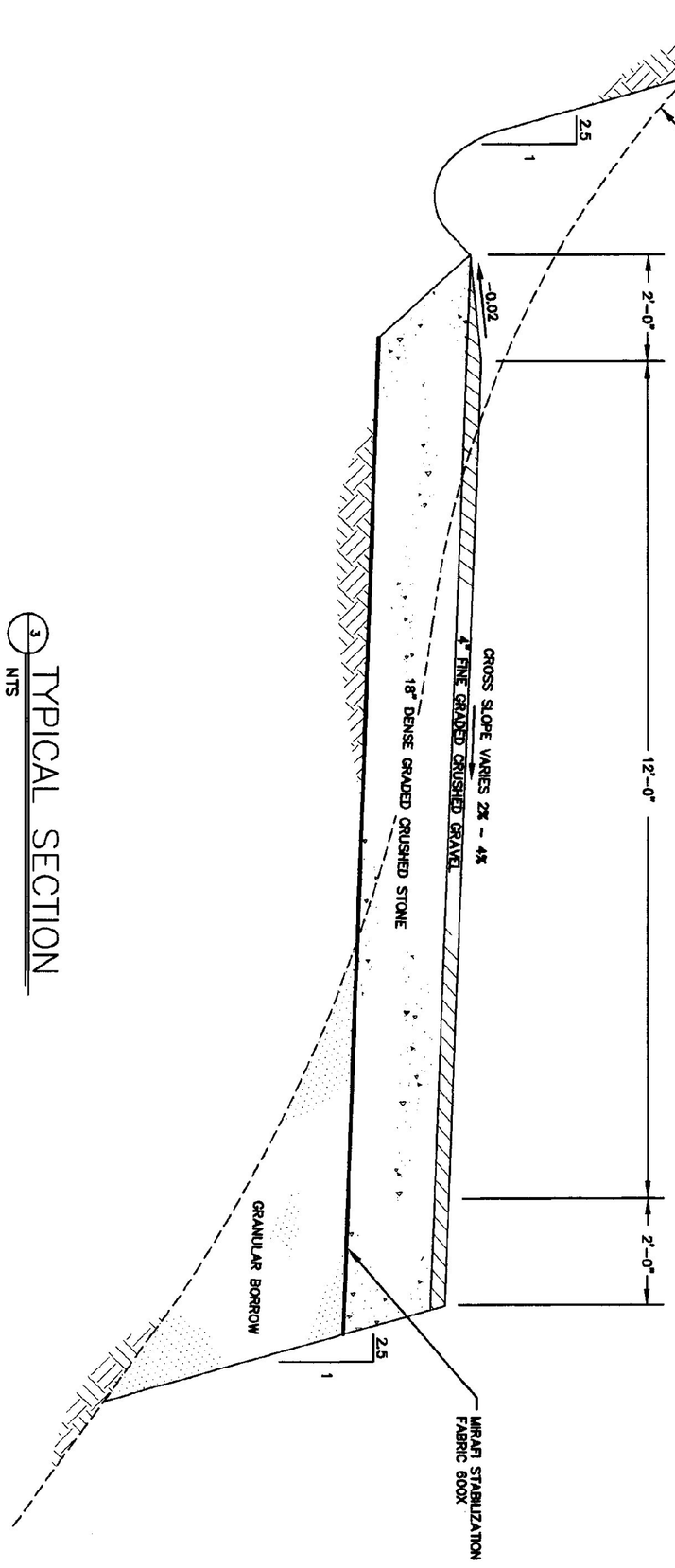

DRAWN	CCE
CHECKED	PD
SCALE	1" = 40'
DATE	01/16/01
JOB NO.	93114
SHEET	C8sb

OF 19 SHEETS

INTERSTATE 89 SOUTHBOUND
WILLISTON INFORMATION CENTER
TEMPORARY RAMP PLAN & PROFILE

WILLISTON PROJECT # IM-BLDG(4) VERMONT

STATE OF VERMONT PAUL DUCHESNEAU No. 3567 REGISTERED PROFESSIONAL ENGINEER

CHAMPLAIN CONSULTING ENGINEERS
85 PRIM ROAD, P.O. BOX 453
COLCHESTER, VERMONT 05446
(802) 863-8060
(802) 864-1878 FAX

COPYRIGHT © 2001 CHAMPLAIN CONSULTING ENGINEERS ALL RIGHTS RESERVED

REVISIONS	BY

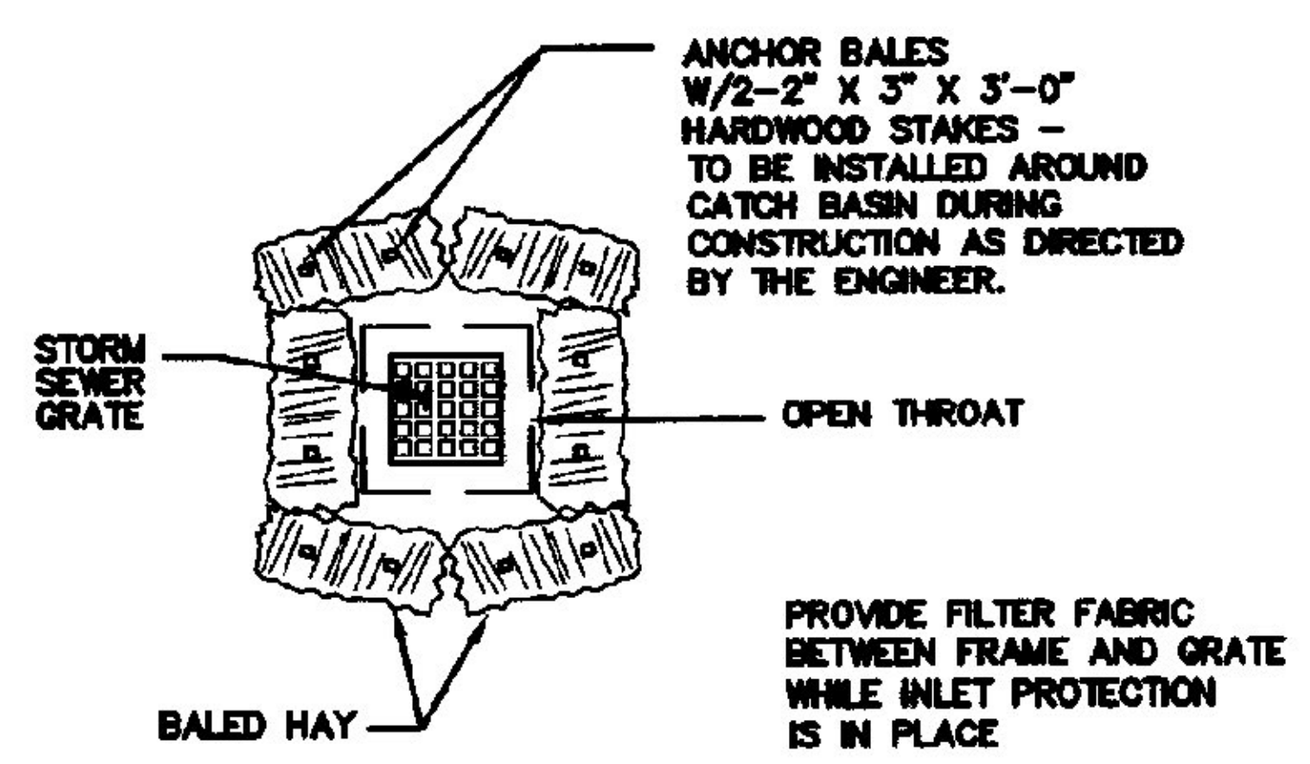

1 INLET PROTECTION
N.T.S.

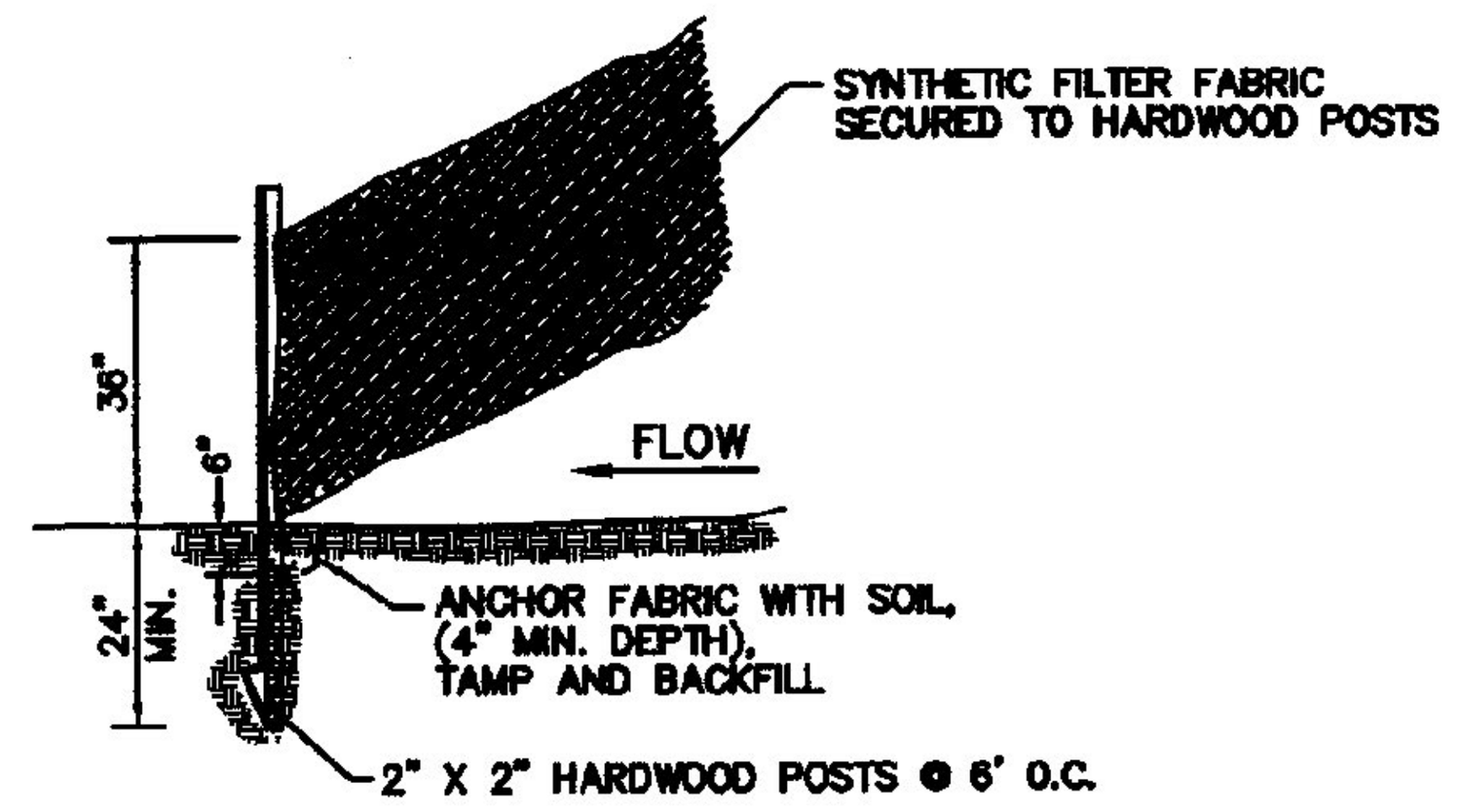

2 SILT FENCE DETAIL
N.T.S.

SEEDING SPECIFICATION

URBAN MIX GRASS SEED		
% BY WEIGHT	LBS. LIVE SEED PER ACRE	TYPE OF SEED
37.5	45	CREEPING RED FESCUE
31.25	37.5	KENTUCKY BLUEGRASS
31.25	37.5	WINTER HARDY, PERENNIAL RYE
100	120 # LIVE SEED/ACRE	

CONSERVATION MIX GRASS SEED		
% BY WEIGHT	LBS. LIVE SEED PER ACRE	TYPE OF SEED
35	35	CREEPING RED FESCUE
23	23	KENTUCKY BLUEGRASS
15	15	ANNUAL RYE
11	11	WINTER HARDY, PERENNIAL RYE (VARIETY PENNFINE, MANHATTAN OR SIMILAR VARIETY)
6	6	WHITE CLOVER
10	10	HIGHLAND BENTGRASS
100	100 # LIVE SEED/ACRE	

FERTILIZER – 20 LBS PER 1000 S.F.
SPRING SEEDING
FALL SEEDING

LIME – 90 LBS PER 1000 S.F.
DOLOMITIC GROUND LIMESTONE
NOT LESS THAN 85% OF THE TOTAL CARBONATE

TOPSOIL
4" MINIMUM APPROVED TOPSOIL

STRAW MULCH – 2 BALES PER 1000 S.F.
APPLY BINDER OR NETTING AS NEEDED

MAINTENANCE, GUARANTEE AND ACCEPTANCE OF SEEDING
THE CONTRACTOR SHALL BE RESPONSIBLE FOR THE CARE AND MAINTENANCE, INCLUDING WATERING, OF SEEDED AREA UNTIL THE SEEDING IS INSPECTED AND ACCEPTED BY THE ENGINEER. INSPECTION SHALL BE MADE AFTER THE SECOND MOWING. THE CONTRACTOR SHALL NOTIFY THE ENGINEER 48 HOURS IN ADVANCE WHEN THE SECOND MOWING IS SCHEDULED.

RESEEDING SHALL BE DONE UNTIL ALL AREAS ARE COMPLETELY COVERED WITH A MATURE STAND OF GRASS. AN AREA SHALL BE CONSIDERED COVERED WHEN THE ENTIRE SURFACE CONTAINS A VIGOROUS STAND OF GRASS. AREAS THAT, IN THE OPINION OF THE ENGINEER, ARE PREDOMINANTLY WEEDS SHALL BE TILLED, FINE GRADED, FERTILIZED AND RESEEDED IN THE MANNER SPECIFIED ABOVE.

3 SITE RESTORATION

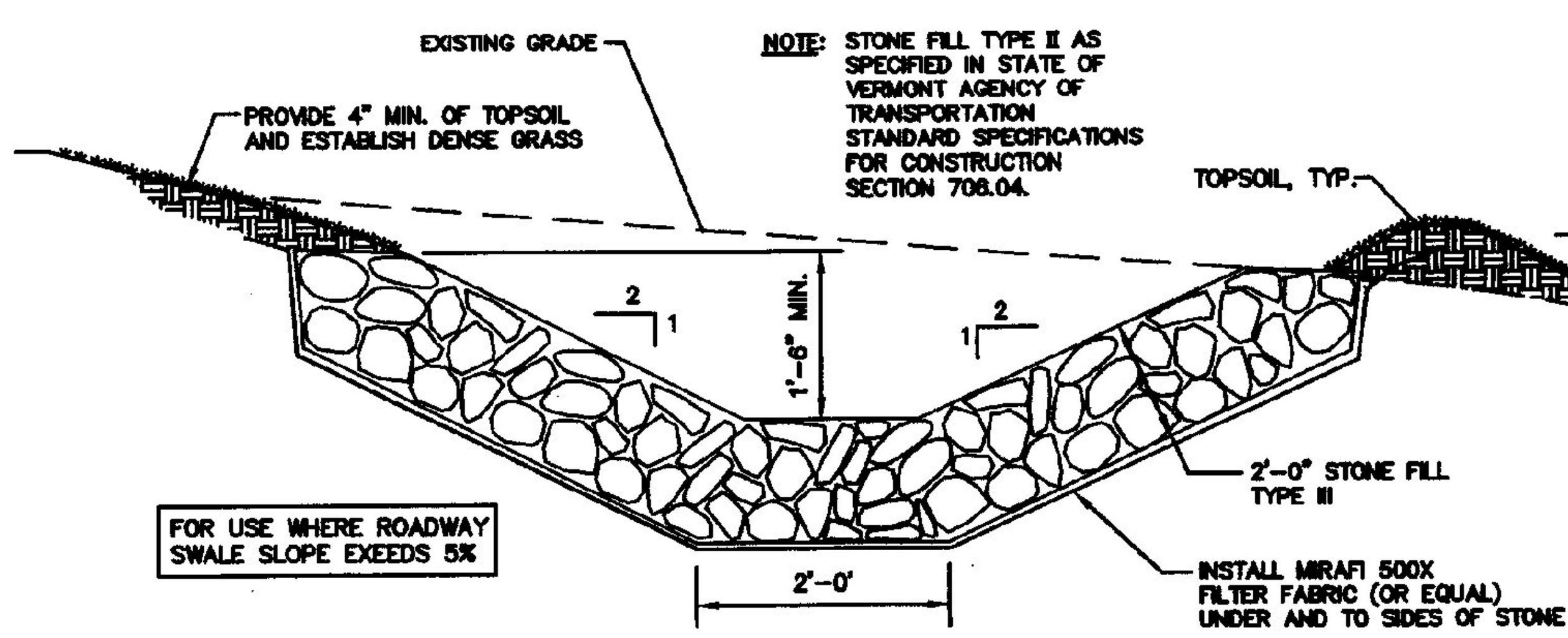

4 STONE LINED SWALE
N.T.S.

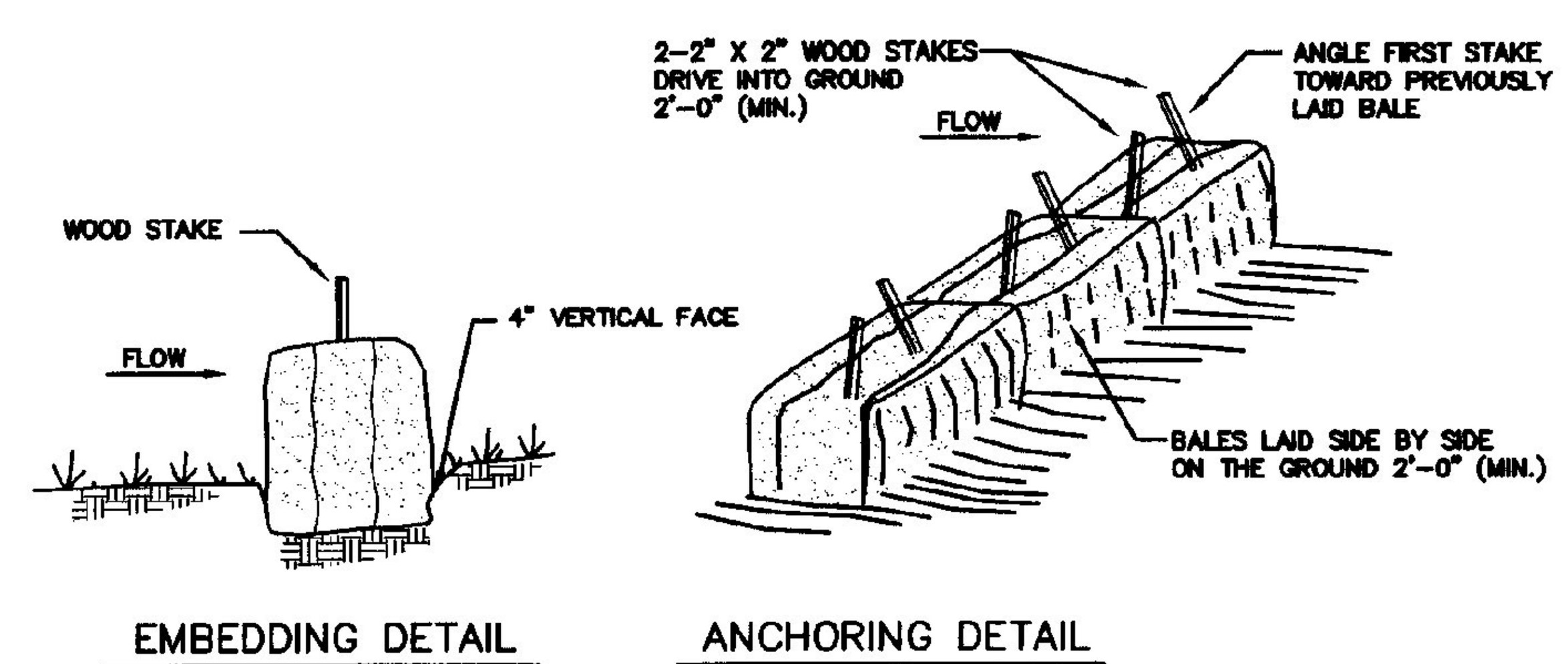

5 BALED HAY EROSION CHECKS
N.T.S.

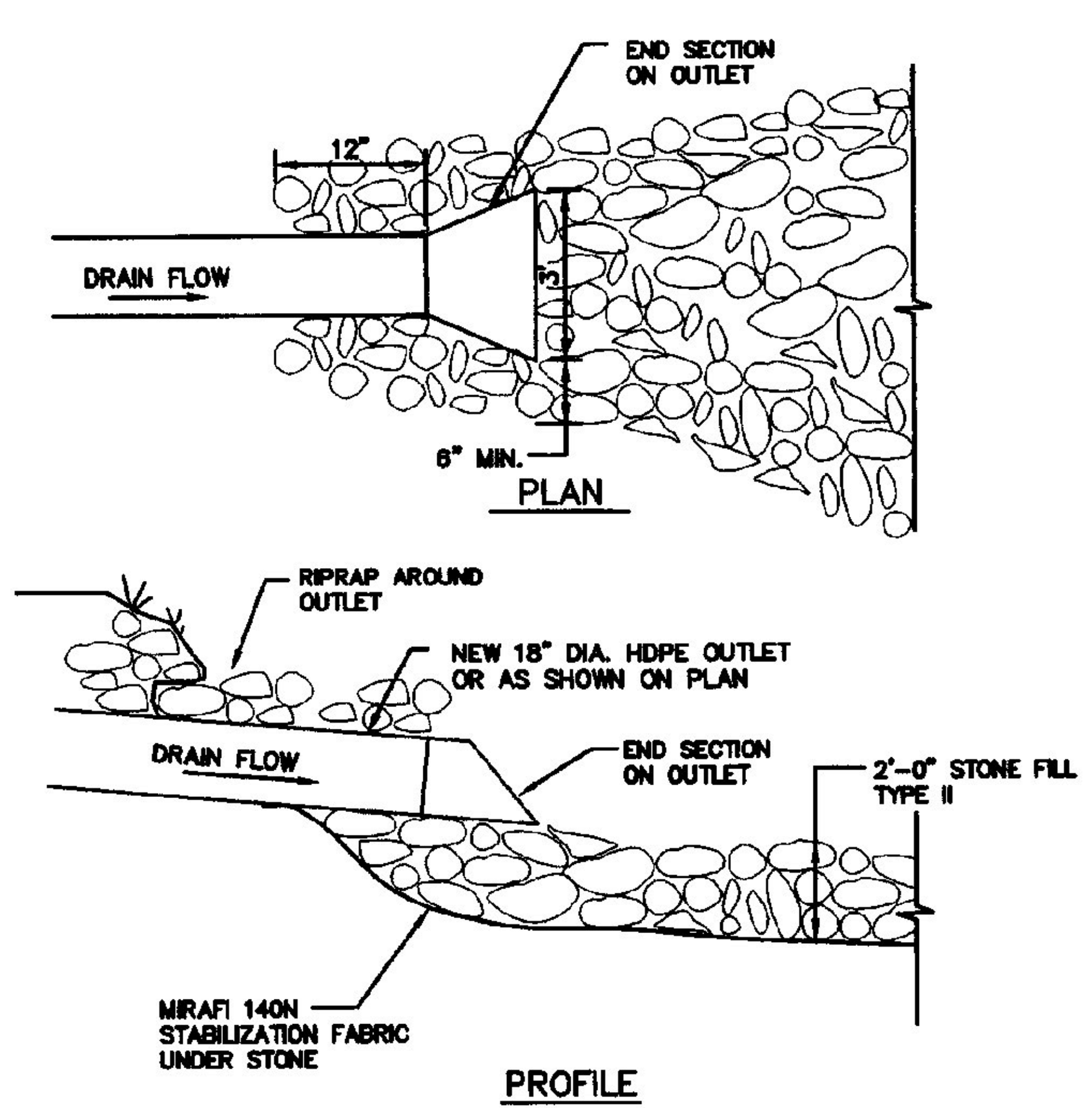

6 TYPICAL OUTLET DETAIL
N.T.S.

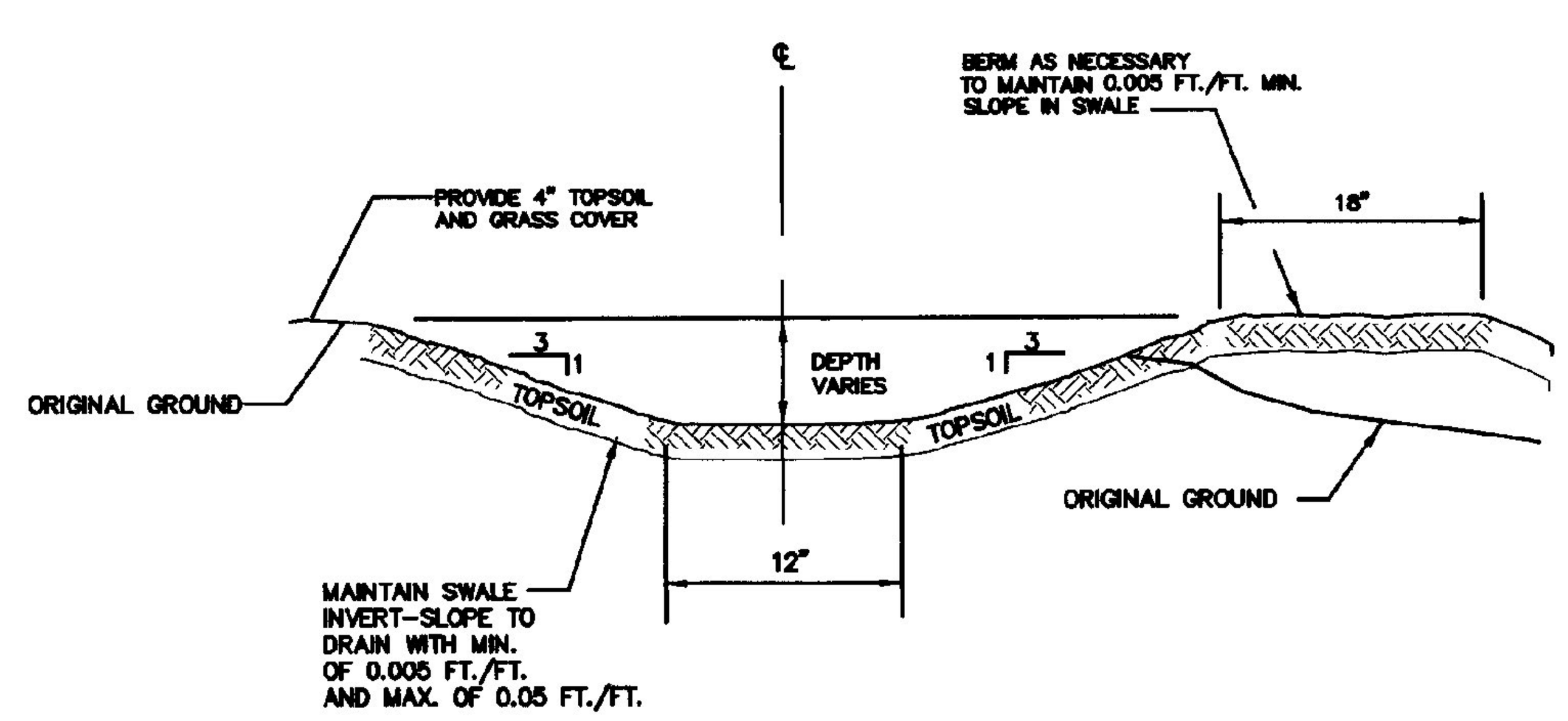

7 TYPICAL SHALLOW DIVERSION SWALE
N.T.S.

EROSION CONTROL

1. General Notes
   a. The Contractor shall construct and maintain all erosion measures in accordance with the "Vermont Handbook for Soil Erosion and Sediment Control on Construction Sites, Special Publication no. 3".

2. Construction Sequence
   a. The Contractor shall be responsible for establishing all erosion control measures delineated on the plans and any additional measures that are necessary to minimize erosion. The Contractor shall have erosion control materials and installation equipment on site at all times.
   b. Silt fences shall be installed along the base of the fill slopes. This shall remain in place until the project site has been stabilized. Install hay bales in grass-lined swales 50 feet on center to prevent silt from washing into the drainage system during construction. Hay bales shall be removed when vegetation is established.
   c. Dust shall be controlled through the application of calcium chloride or water.
   d. Excavated material from earth excavation and ditch digging shall be disposed of offsite or used for project fill material if determined suitable by the Owner's Representative.
   e. All temporary erosion control measures required for any proposed winter work shall be installed prior to October 1. These measures shall be in place prior to the commencement of any site work or earth-moving.

3. Temporary Measures
   a. Hay Bale Check Dam and Inlet Protection – Bales shall be placed in a row with ends tightly abutting the adjacent bales. Each bale shall be imbedded in the soil a minimum of 4 inches. Bales shall be securely anchored in place by stakes driven through the bales. The first stake in each bale shall be driven toward the previously laid bale to force the bales together.

      Bales shall be repaired or replaced as needed. Once vegetation is established and the bales are no longer needed for erosion control, they shall be removed. Sediment deposits shall then be removed and placed in an upland area where there is no danger of further erosion.
   b. Silt Fences – The silt fences shall be constructed in accordance with the construction detail. The fence shall generally be placed 10 feet from the toe of the slope or as shown on the plan. The ends of the fence shall be placed uphill to form a horseshoe shape to trap all runoff.

      The silt fences shall be inspected periodically for damage or buildup of sediment. All damaged silt fence shall be repaired or replaced. Sediment deposits shall be removed from the fence as they accumulate and placed in an area where there is no danger of further erosion.
   c. Erosion Matting – Erosion matting shall be placed on all grass-lined swales with profile grades exceeding 5.0% and shall be placed and maintained in accordance with the Vermont Agency of Transportation Standard Specifications Sections 654 and 755.07.
   d. Dust Control – During construction, dust will be controlled with water distributed by a truck-mounted spray bar. At the direction of the Engineer, Calcium Chloride AASHTO M 144 or Sodium Chloride M 143 may be used.
   e. All stockpile material (topsoil, borrow, etc.) will a have a hay bale dike or silt fence constructed around the perimeter. Seed and mulch stockpile material as soon as possible to prevent soil erosion and sedimentation off site. Locate stockpiles on the uphill side of disturbed areas, if possible. During windy conditions, stockpiled material shall be covered or watered appropriately to prevent wind erosion.
   f. Slopes greater than 1:3 shall have erosion control netting installed to stabilize the slope and reduce the erosion potential. Install netting over mulched slopes so that all parts are in contact with the soil and mulch. Pin netting with wire staples 3 feet o.c. to ensure full bonding with soil surface.

4. Permanent Measures
   a. Grass Lined Swales – All swales that are not stone-lined shall be topsoiled, seeded, fertilized and mulched. Any area which shows signs of erosion shall be reseeded immediately and maintained until permanent vegetation is established.
   b. Restoration – As soon as construction is completed in a given area, it shall be topsoiled, seeded, fertilized and mulched.

      The topsoil shall be submitted to the Extension Service for analysis. Fertilizer shall be applied at approximately a rate of 800 pounds per acre depending on soil analysis. If necessary, lime shall be applied to the topsoil to produce a soil PH of approximately 6.0.

      After the finished grade has been established and the fertilizer spread, plant the specific seed mixture and work firmly into the soil. Apply seed on the prepared seed bed with approved mechanical seeders or hydroseeding equipment. Upon completion of the above planting operations, roll all areas, leaving the surface of all area true to grade, smooth, and free from hollows or other irregularities. Thoroughly water all newly planted areas immediately after planting using a fine spray. Protect banks and swales from erosion and repair erosion that occurs. Banks, swales or other graded areas that have been washed out or have become damaged shall be repaired immediately. Unless approval is granted by the Engineer to plant off season, seeding will be conducted only during the period from April 15th to October 15th. Seeding shall not proceed before other phases of the work have progressed sufficiently and shall not interfere with other phases of work.

      After seeding, mulch shall be applied at a rate of 2 bales per 1000 square feet.

5. Winter Construction
   a. If due to the project schedule, construction during the winter months is necessary, the contractor shall follow the winter construction procedures outlined in the "Vermont Handbook for Soil Erosion and Sediment Control on Construction Sites"
      I. Minimize disturbance between October and May.
      II. All erosion control measures shall be in place prior to the ground freezing.
      III. Mulch shall be applied to all disturbed area at a rate of 90 pounds per 1,000 square feet. The Contractor shall maintain all areas that are mulched until permanent vegetation can be established.

6. Maintenance, Guarantee and Acceptance
   a. The Contractor shall be responsible for the care and maintenance including watering of seeded areas, until the seeding is inspected and accepted by the Owner.
   b. Reseeding shall be done until all areas are completely covered with a mature stand of grass. An area shall be considered covered when the entire surface contains a verdurous stand of grass. Areas that, in the opinion of the Engineer, are predominantly weeds shall be plowed up, fine graded, fertilized and reseeded in the manner specified previously, exercising caution not to cause damage to new or existing plant material.
   c. Maintain and guarantee all seeded area until acceptance.

REVISIONS	BY

COPYRIGHT © 2001
CHAMPLAIN CONSULTING ENGINEERS
ALL RIGHTS RESERVED

CHAMPLAIN CONSULTING ENGINEERS
85 PRIM ROAD, P.O. BOX 453
COLCHESTER, VERMONT 05446
(802) 863-8060
(802) 864-1878 FAX

STATE OF VERMONT – PAUL DUCHESNEAU – No. 3567 – REGISTERED PROFESSIONAL ENGINEER

INTERSTATE 89 SOUTHBOUND
WILLISTON INFORMATION CENTER
EROSION CONTROL DETAILS
WILLISTON PROJECT # IM-BLDG(4) VERMONT

DRAWN	CCE
CHECKED	PD
SCALE	NONE
DATE	01/16/01
JOB NO.	93114
SHEET	C9sb

CCE//MLC File: C:\SDSK\PROJ\93114-SB99\SB-09sheet.dwg Plotted: 2001-01-15 15:36:10

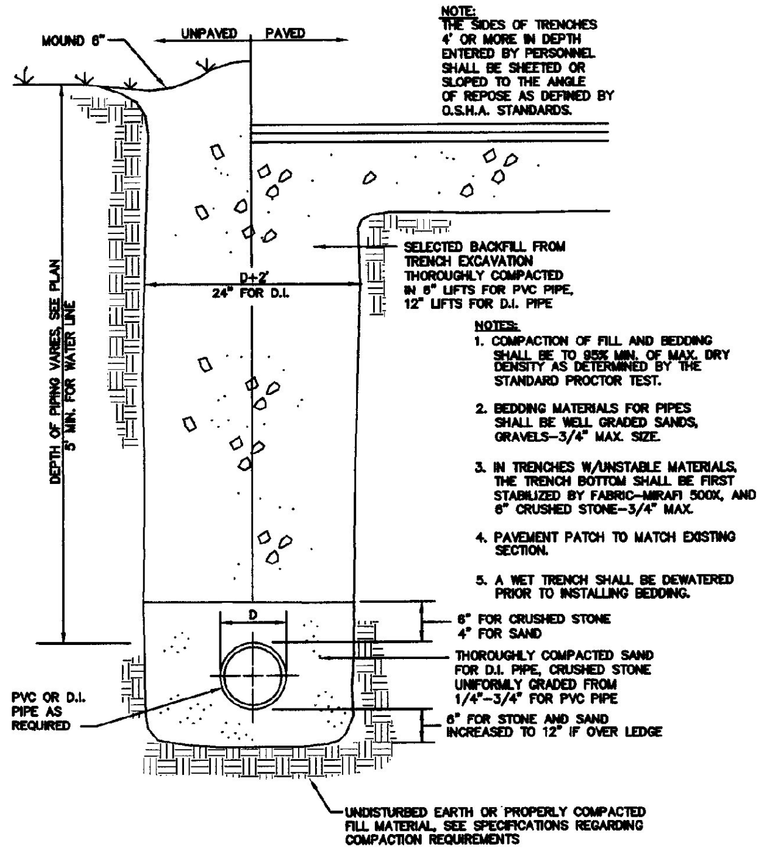

1 TYPICAL EXCAVATION TRENCH DETAIL
N.T.S.

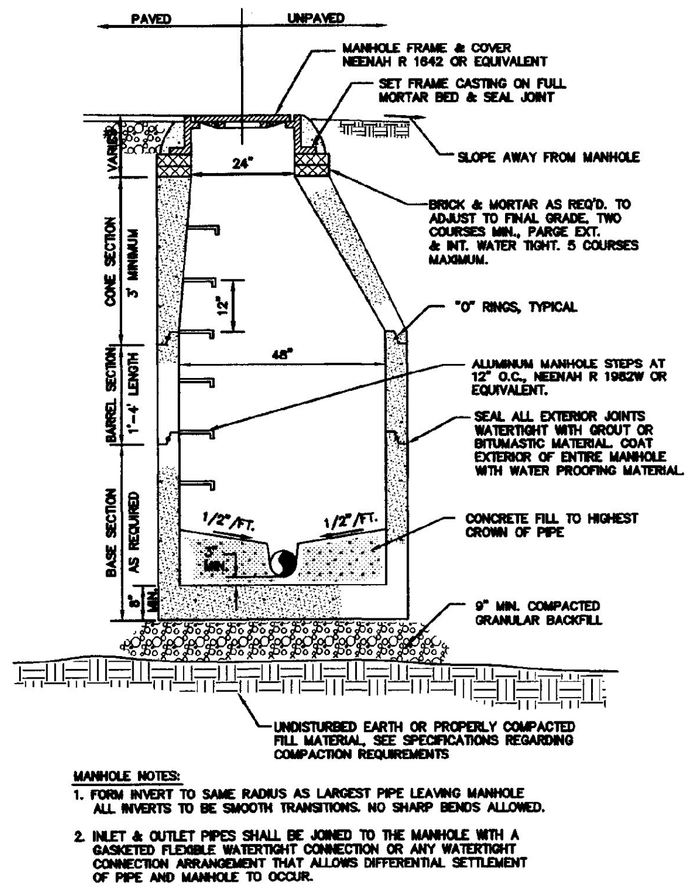

MANHOLE NOTES:
1. FORM INVERT TO SAME RADIUS AS LARGEST PIPE LEAVING MANHOLE ALL INVERTS TO BE SMOOTH TRANSITIONS. NO SHARP BENDS ALLOWED.
2. INLET & OUTLET PIPES SHALL BE JOINED TO THE MANHOLE WITH A GASKETED FLEXIBLE WATERTIGHT CONNECTION OR ANY WATERTIGHT CONNECTION ARRANGEMENT THAT ALLOWS DIFFERENTIAL SETTLEMENT OF PIPE AND MANHOLE TO OCCUR.

2 TYPICAL PRE-CAST CONCRETE MANHOLE
N.T.S.

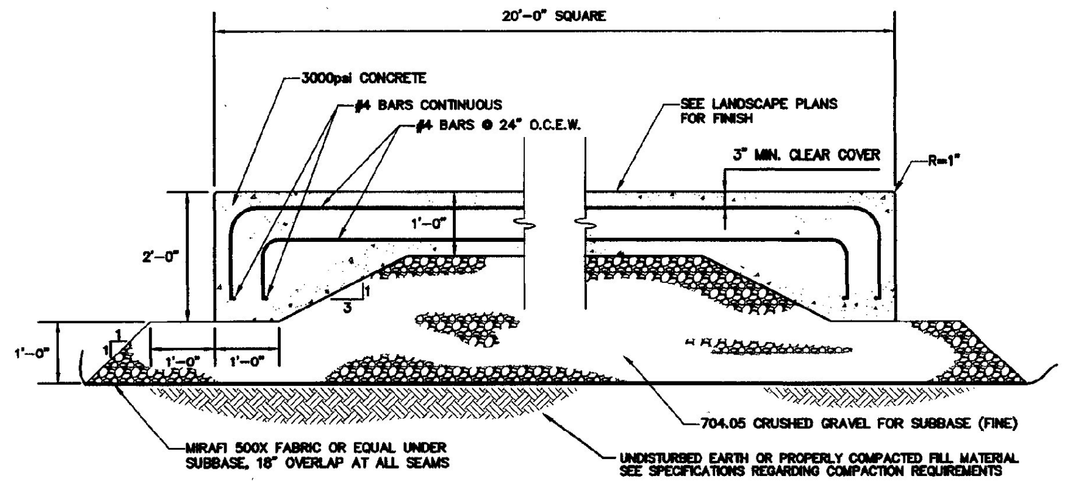

3 SCULPTURE PAD SECTION
N.T.S.

NOTES:
1. COMPACTION OF BACKFILL AND BEDDING SHALL BE A MINIMUM OF 90% (95% UNDER ROADWAY SURFACES) OF MAXIMUM DRY DENSITY DETERMINED IN THE STANDARD PROCTOR TEST (ASTM D698).
2. BEDDING MATERIAL SHALL NOT BE PLACED ON FROZEN SUBGRADE.
3. APPROVED BACKFILL SHALL NOT CONTAIN ANY STONES MORE THAN 1" IN LARGEST DIMENSION, REDUCED TO 6" UNDER ROADWAYS, OR CONTAIN ANY FROZEN, WET, OR ORGANIC MATERIAL.
4. TRENCHES SHALL BE COMPLETELY DEWATERED PRIOR TO PLACING OF PIPE BEDDING MATERIAL AND KEPT DEWATERED DURING INSTALLATION OF PIPE AND BACKFILL.
5. IN TRENCHES WITH UNSTABLE MATERIALS, TRENCH BOTTOM SHALL FIRST BE STABILIZED BY PLACEMENT OF FILTER FABRIC THEN CRUSHED STONE (3/4" MAXIMUM).
6. THE SIDES OF TRENCHES 4' OR MORE IN DEPTH ENTERED BY PERSONNEL SHALL BE SHEETED OR SLOPED TO THE ANGLE OF REPOSE AS DEFINED BY O.S.H.A. STANDARDS.
7. BEDDING MATERIAL SHALL CONSIST OF CRUSHED STONE, GRAVEL OR SAND WITH A MAXIMUM SIZE OF 3/4". SUBMIT A SAMPLE TO THE ENGINEER FOR APPROVAL.

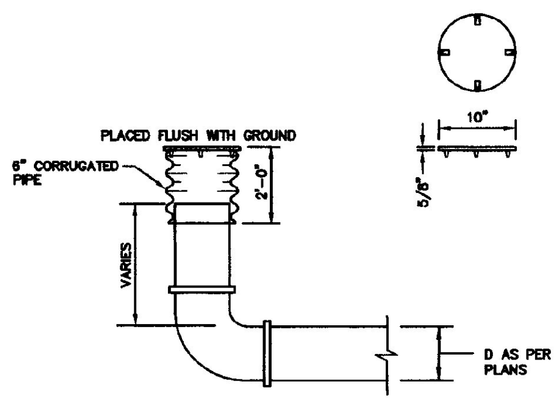

4 UNDERDRAIN FLUSHING BASIN
N.T.S.

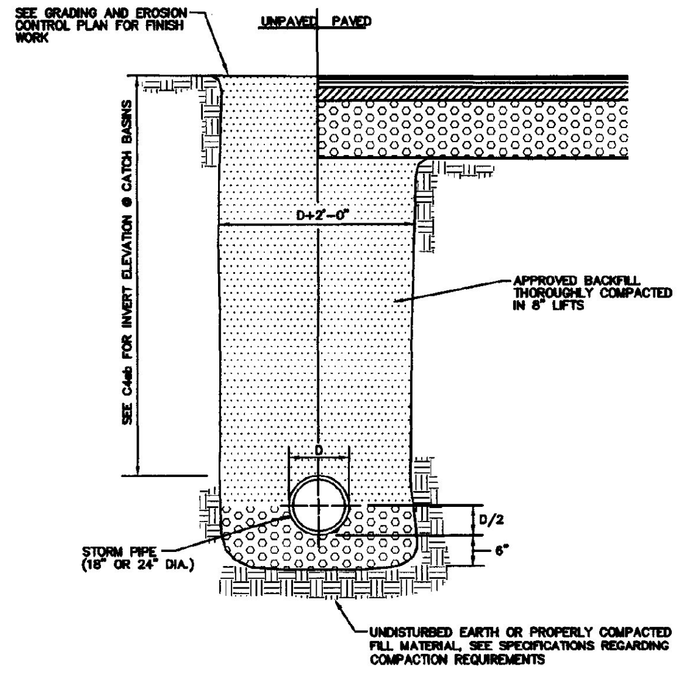

5 STORM DRAINAGE TYPICAL TRENCH
N.T.S.

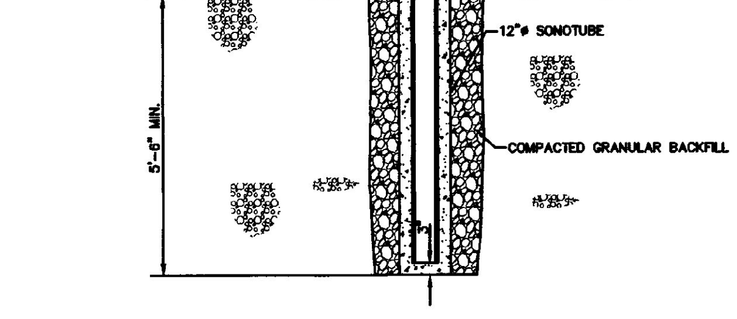

6 EXTERIOR BOLLARD
N.T.S.

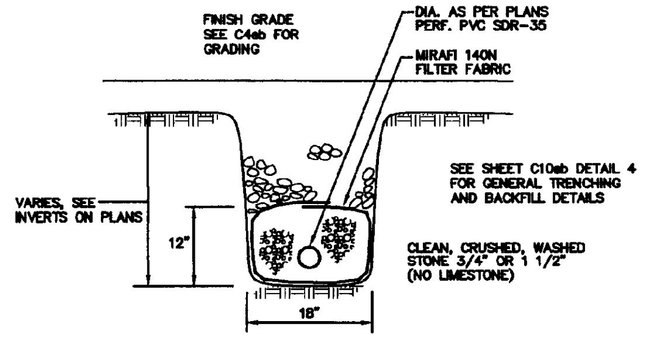

7 UNDERDRAIN UNDER NON-PAVED AREAS
N.T.S.

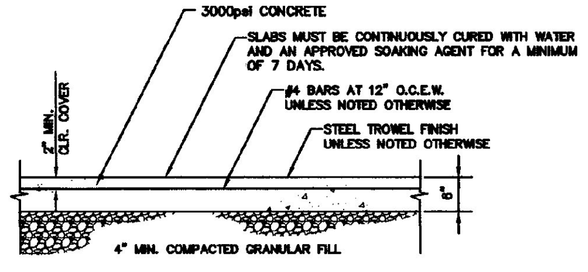

8 TYPICAL SLAB-ON GRADE
N.T.S.

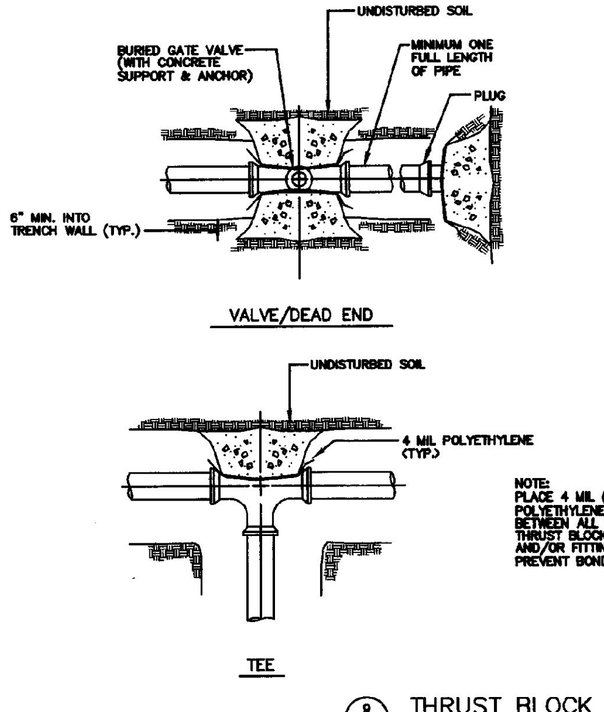

9 THRUST BLOCK DETAILS
N.T.S.

MINIMUM AREA OF BEARING SURFACE OF CONC. THRUST BLOCKS (in square feet)

3"				4"				6"				8"				12"					
ENDS & TEES	90° ELB.	45° ELB.	22.5° ELB. OR LESS	ENDS & TEES	90° ELB.	45° ELB.	22.5° ELB. OR LESS	ENDS & TEES	90° ELB.	45° ELB.	22.5° ELB. OR LESS	ENDS & TEES	90° ELB.	45° ELB.	22.5° ELB. OR LESS	ENDS & TEES	90° ELB.	45° ELB.	22.5° ELB. OR LESS	SOIL CONDITION	SAFE BEARING LOAD (P.S.F.)
0.5	0.5	0.5	0.5	0.5	1.0	0.5	0.5	1.0	1.5	1.0	0.5	2.0	2.5	1.5	1.0	4.0	5.5	3.0	1.5	SOUND SHALE	10,000
1.0	1.0	1.0	0.5	1.5	2.0	1.0	0.5	3.0	4.0	2.0	1.0	4.5	6.5	3.5	2.0	10.0	14.0	7.5	4.0	CEMENTED GRAVEL & SAND	4,000
1.0	1.5	1.0	0.5	2.0	2.5	1.5	1.0	3.5	5.0	3.0	1.5	6.0	8.5	5.0	2.5	13.0	18.5	10.0	5.0	COARSE & FINE COMPACT SAND	3,000
1.5	2.5	1.5	1.0	2.5	3.5	2.0	1.0	5.5	7.5	4.0	2.0	9.0	13.0	7.0	3.5	20.0	27.5	15.0	8.0	BEDROCK THAT CAN BE SPREAD	2,000
3.0	4.5	2.5	1.5	5.0	7.0	4.0	2.0	10.5	15.0	8.0	4.0	18.0	25.0	14.0	7.0	39.0	55.0	30.0	15.0	SOFT CLAY	1,000
MAXIMUM WATER PRESSURE = 300 P.S.I. NOTE: REDUCER BEARING AREA = 45 BEND, LARGER PIPE																					

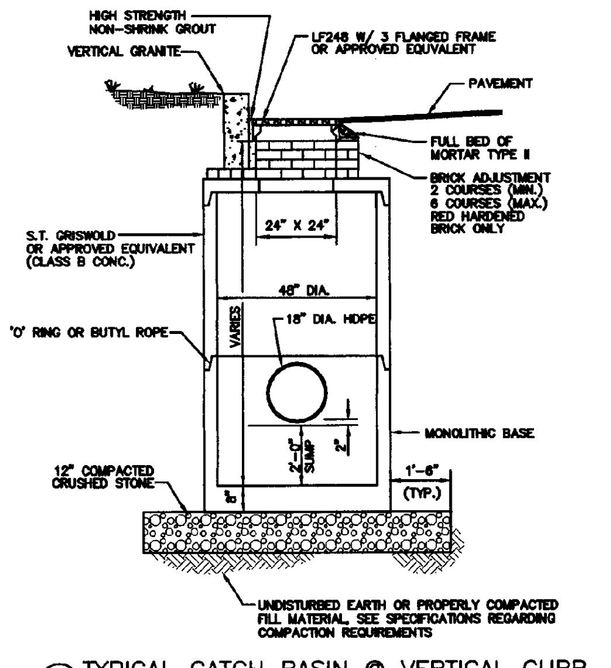

10 TYPICAL CATCH BASIN @ VERTICAL CURB
N.T.S.

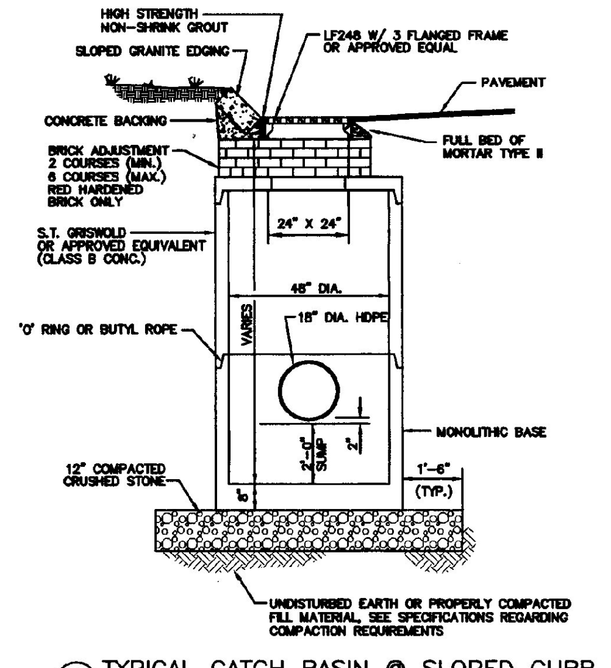

11 TYPICAL CATCH BASIN @ SLOPED CURB
N.T.S.

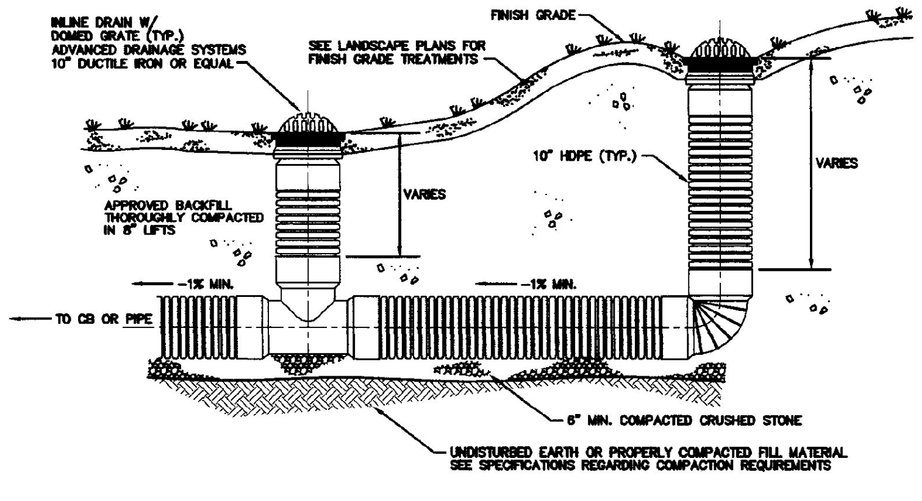

12 TYPICAL YARD DRAIN
N.T.S.

REVISIONS | BY

COPYRIGHT © 2001
CHAMPLAIN CONSULTING ENGINEERS
ALL RIGHTS RESERVED

CHAMPLAIN CONSULTING ENGINEERS
85 PRIM ROAD, P.O. BOX 453
COLCHESTER, VERMONT 05446
(802) 863-8060
(802) 864-1876 FAX

STATE OF VERMONT PAUL DUCHESNEAU No. 3547 REGISTERED PROFESSIONAL ENGINEER

INTERSTATE 89 SOUTHBOUND
WILLISTON INFORMATION CENTER
DETAILS
WILLISTON VERMONT
PROJECT # IM-BLDG(4)

DRAWN	CCE
CHECKED	PD
SCALE	NONE
DATE	01/16/01
JOB NO.	93114
SHEET	C10sb
OF	19 SHEETS

C:\...\AUG. Tue Oct 30 08:49:49 2001 P:\93114-SSBB\93114-SSBB\93114-SSBB-10sb.dwg Plotted: 2001-10-15 15:26:55

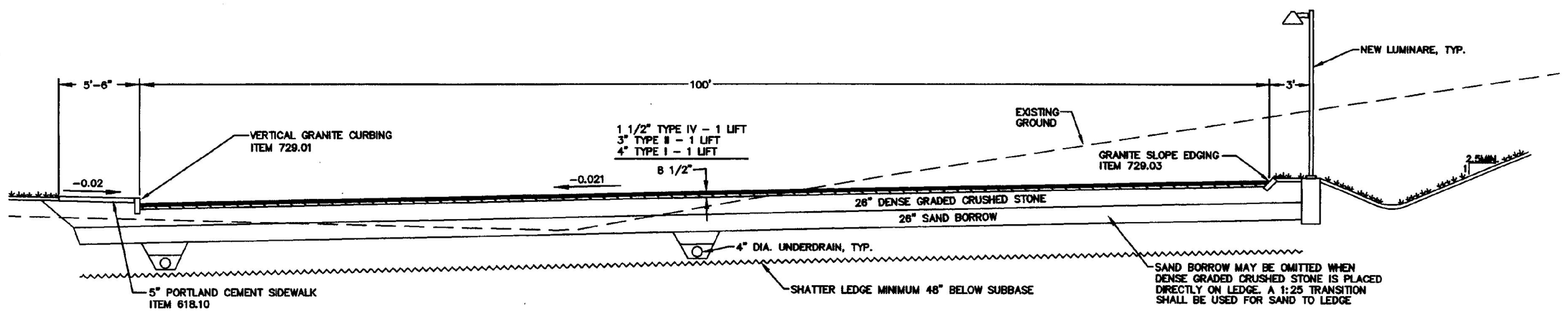

1 TYPICAL SECTION THROUGH TRUCK PARKING
N.T.S.

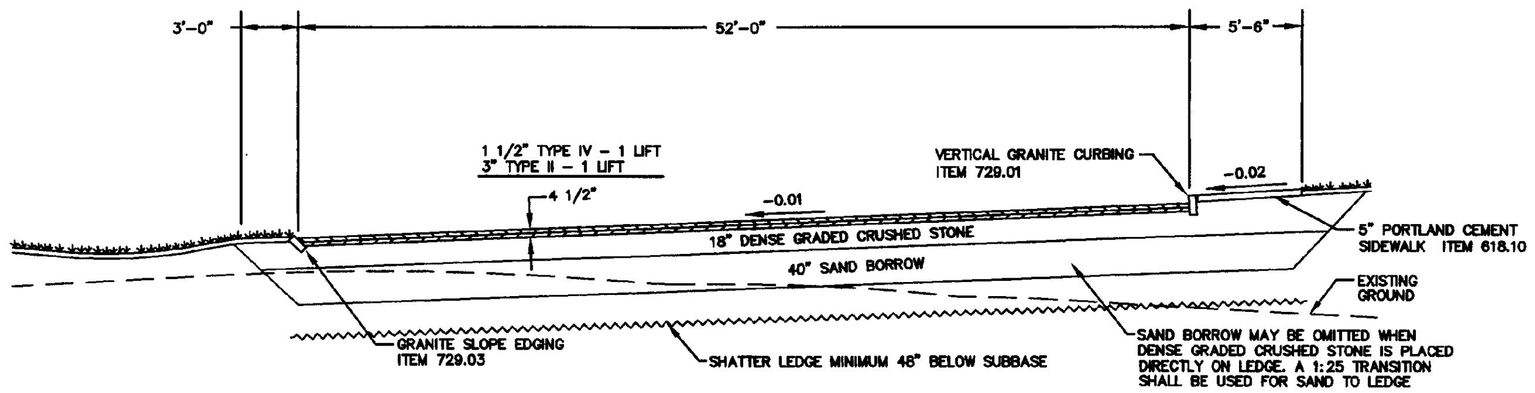

3 TYPICAL SECTION THROUGH CAR PARKING
N.T.S.

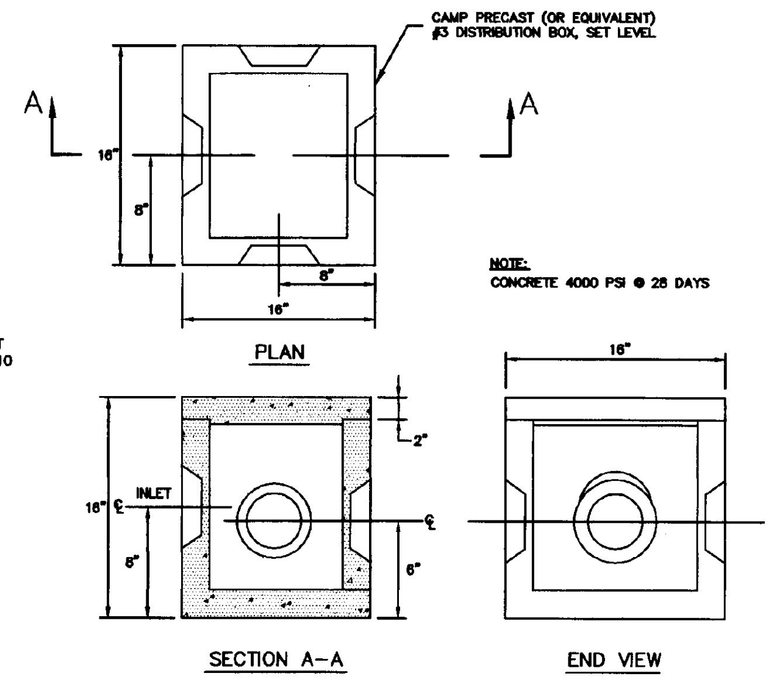

4 PRECAST CONCRETE DISTRIBUTION BOX DETAIL
N.T.S.

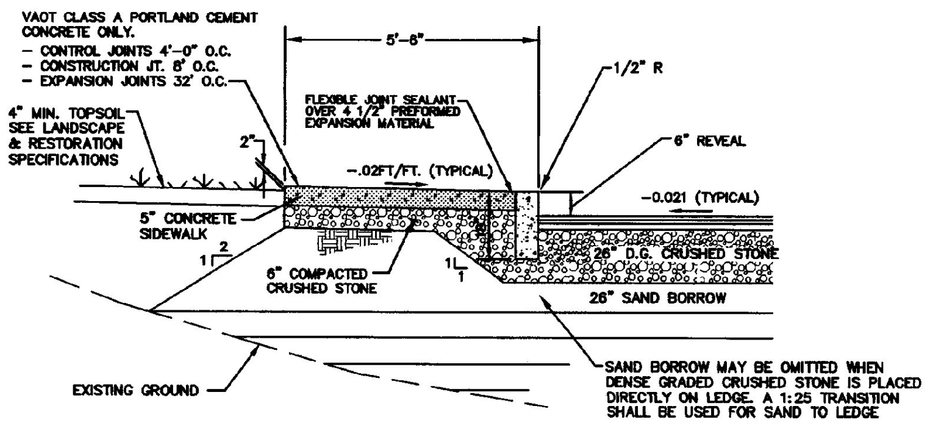

2 TYPICAL SECTION (TRUCK & RV PARKING AREA)
N.T.S.

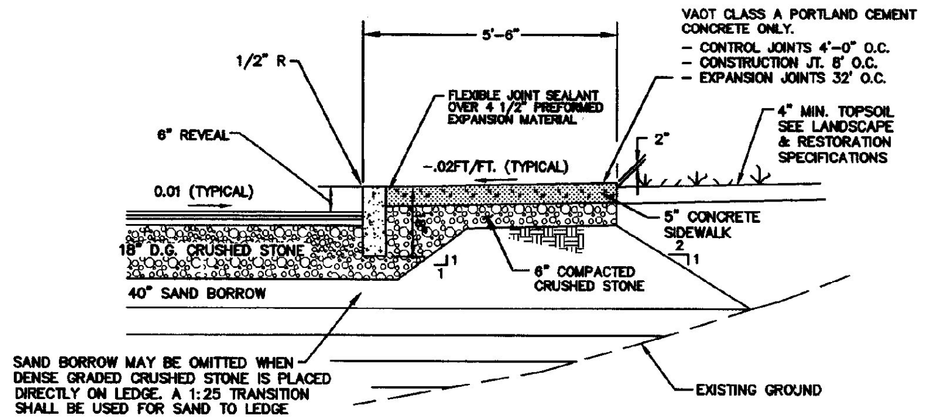

5 TYPICAL SECTION (CAR PARKING AREA)
N.T.S.

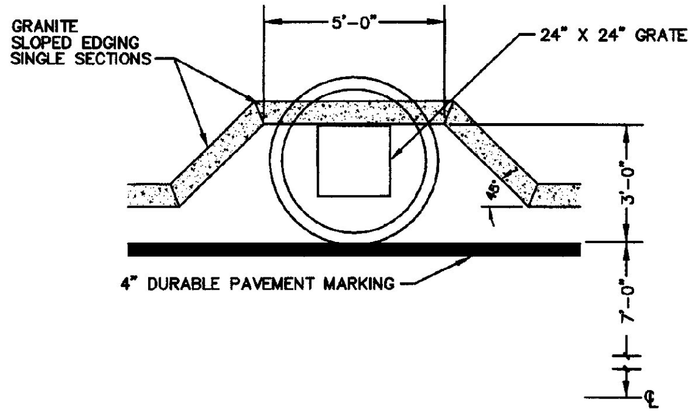

6 TYPICAL CURB-SIDE CATCH BASIN
N.T.S.

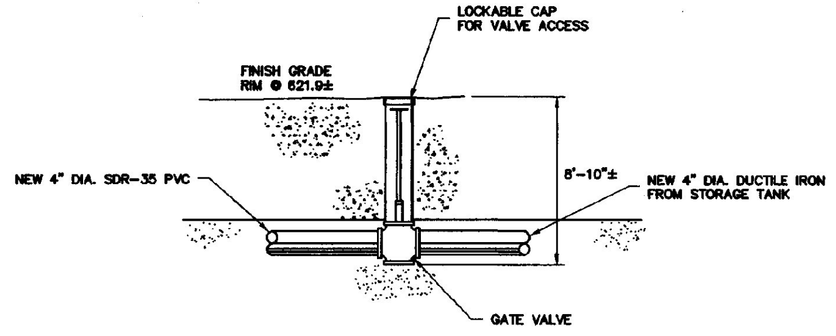

7 TANK DRAIN GATE VALVE DETAIL
N.T.S.

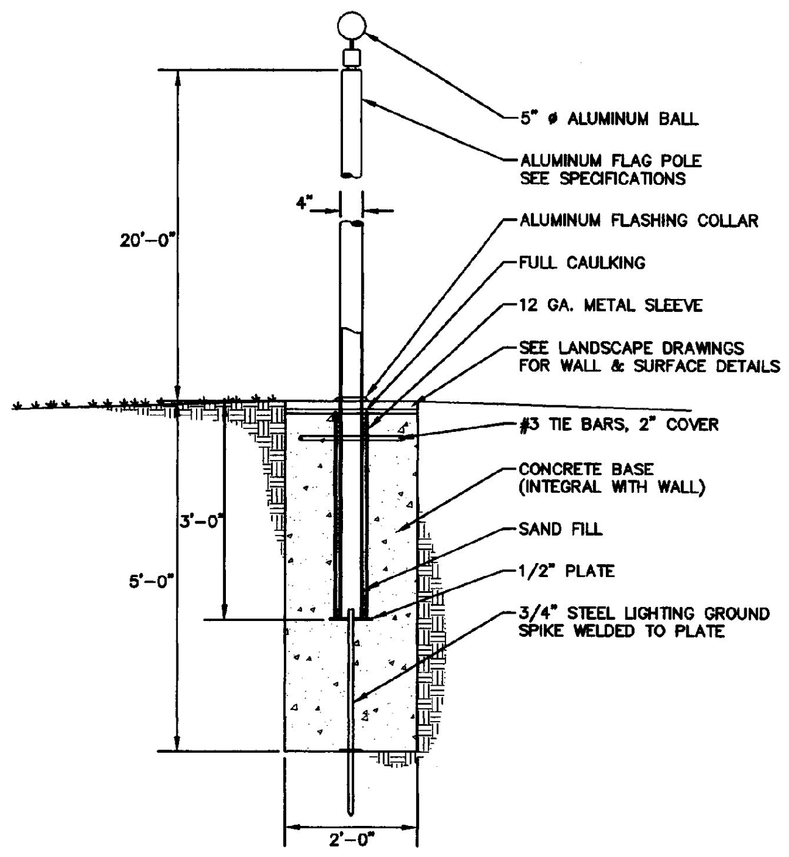

8 FLAGPOLE ANCHOR
N.T.S.

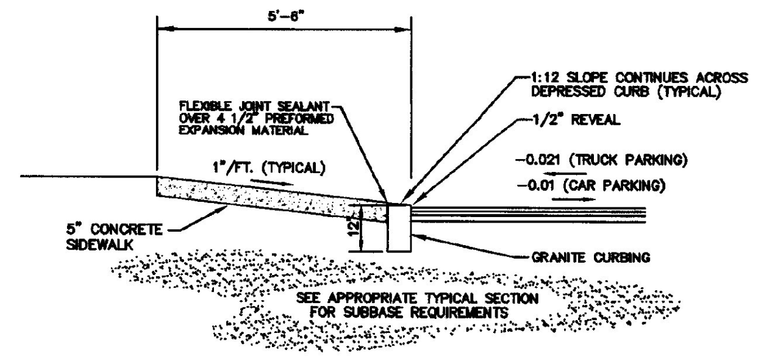

9 TYPICAL SECTION DEPRESSED GRANITE CURB
N.T.S.

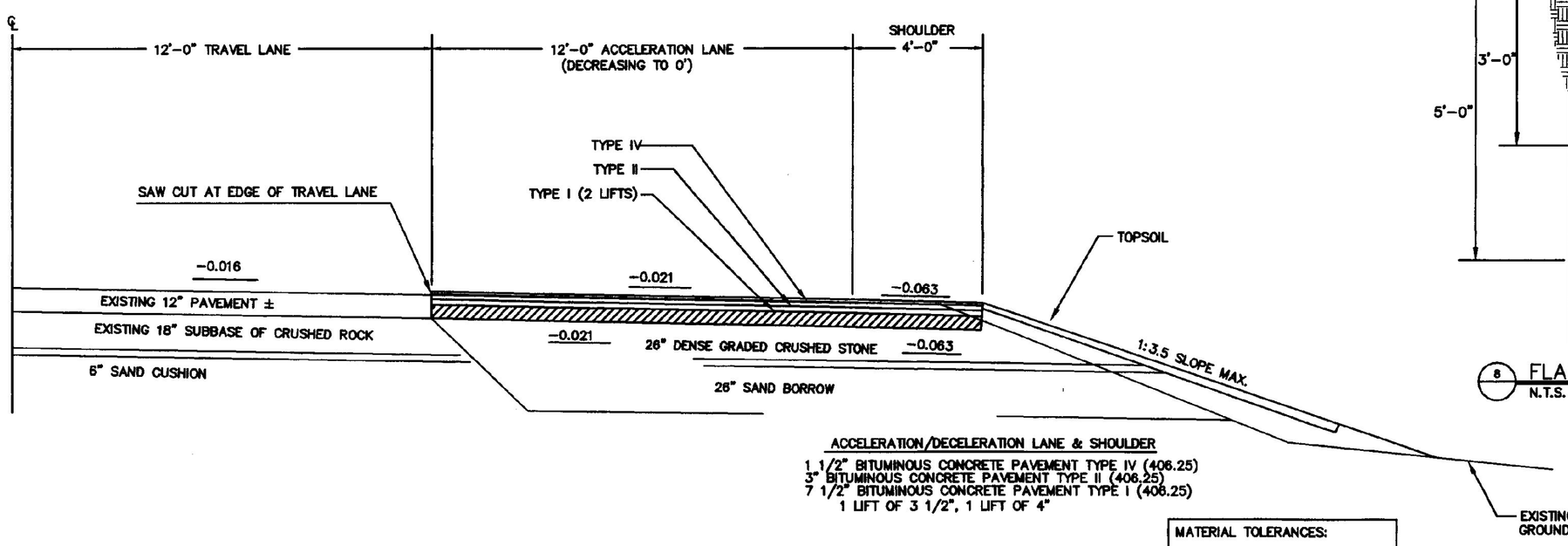

MATERIAL TOLERANCES:
PAVEMENT (TOTAL DEPTH) ±1/4"
SUBBASE ±1"

10 TYPICAL SECTION ACCELERATION/DECELERATION LANE
N.T.S.

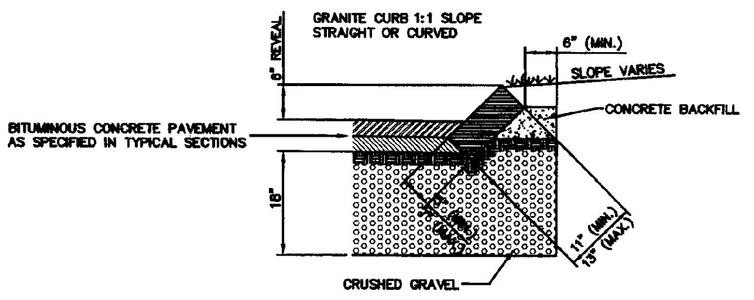

RADIUS FOR STONES WITH SQUARE JOINTS	MAXIMUM LENGTH
16' - 26'	18"
27' - 40'	24"
41' - 56'	30"
40' - 69'	4'-0"
70' - 83'	5'-0"
84' - 95'	6'-0"
96' - 109'	7'-0"
OVER 109'	8'

NOTES:
1. ADJOINING STONES OF STRAIGHT CURB LAID ON CURVES SHALL HAVE THE SAME OR APPROXIMATELY THE SAME LENGTH.
2. MINIMUM LENGTH OF STRAIGHT CURB STONES = 16"
3. MAXIMUM LENGTH OF STRAIGHT CURB STONES = 8'
4. MAXIMUM LENGTH OF STRAIGHT CURB STONES LAID ON CURVES - SEE CHART.
5. NOT TO BE USED FOR RADIUS LESS THAN 10'.

11 SLOPED GRANITE CURBING
N.T.S.

COPYRIGHT © 2001
CHAMPLAIN CONSULTING ENGINEERS
ALL RIGHTS RESERVED

REVISIONS | BY

CHAMPLAIN CONSULTING ENGINEERS
85 PRUM ROAD, P.O. BOX 453
COLCHESTER, VERMONT 05446
(802) 863-6060
(802) 864-1878 FAX

STATE OF VERMONT
PAUL DUCHERMAN
No. 3567
REGISTERED
PROFESSIONAL ENGINEER

INTERSTATE 89 SOUTHBOUND
WILLISTON INFORMATION CENTER
DETAILS
WILLISTON VERMONT
PROJECT # IM-BLDG(4)

DRAWN	CCE
CHECKED	PD
SCALE	NONE
DATE	01/16/01
JOB NO.	93114
SHEET	C11sb

OF 19 SHEETS

CCE/MALC File: C:\2DSKIPROJ\93114-2999\08-11sht.dwg Plotted: 2001-01-15 13:39:42

HINGED SIGNS MOUNTED ON 3" SQUARE TUBULAR ALUMINUM SEE SHEET C12sb

WEIGH STATION AHEAD OPEN

ALL TRUCKS NEXT RIGHT

TRUCKS USE RIGHT SHOULDER

RAMP 30 M.P.H.

AIRBAGS SAVE LIVES PLACE CHILDREN IN REAR SEAT

VIETNAM VETERANS MEMORIAL HIGHWAY

REST AREA
VERMONT INFORMATION CENTER
1 MILE
NEXT REST AREA 50 MILES

2–W6X9

REST AREA
VERMONT INFORMATION CENTER
NEXT RIGHT

2–W6X9

SAFETY BELTS REQUIRED

1 SITE PLAN
SCALE 1" = 100'

Graphic Scale
100 0 100 200 300 400 feet

REST AREA

CARS

CARS

DO NOT ENTER

RESERVED PARKING 3 EACH

VAN ACCESSIBLE 1 EACH

YIELD

DO NOT ENTER

ONE WAY

YIELD

WRONG WAY

2– 3"ø TUBULAR STEEL

PROHIBITED
OVERNIGHT CAMPING
UNATTENDED VEHICLES
COMMECIAL ENTERPRISES

TRUCKS BUSES/RVS

WRONG WAY

TRUCKS BUSES/RVS

WALK DOGS HERE

DO NOT ENTER

EXISTING EDGE OF PAVEMENT

ONE WAY

2 SITE PLAN
SCALE 1" = 40'

Graphic Scale
40 0 40 80 120 160 feet

SIGNS & PAVEMENT MARKINGS

1. SIGN ERECTION SHALL BE IN CONFORMANCE WITH SECTION 675 OF STANDARD SPECIFICATIONS FOR CONSTRUCTION, 1995.
2. PLACEMENT OF SIGNS SHALL BE IN CONFORMANCE WITH STANDARD SHEETS E–120 AND E–130.
3. SPECIFIC SIGN TYPES ARE DETAILED ON STANDARD SHEETS E–131, E–132, E–139, E–142, E–143, E–144, E–150 AND THESE PLANS.
4. SPECIFIC POSTS AND FOUNDATION DETAILS CAN BE FOUND ON STANDARD SHEETS E–160, E–161, E–162 & E–163.
5. PAVEMENT MARKINGS SHALL BE IN ACCORDANCE WITH THE MANUAL OF UNIFORM TRAFFIC CONTROL DEVICES (MUTCD). ADDITIONAL MARKING SPECIFICATIONS CAN BE FOUND IN THE STANDARD SPECIFICATION SECTION 708 AND IN THE VERMONT PAVEMENT MARKING AND PLACEMENT GUIDE, OCT. 1991 AND STANDARD SHEETS E–191, E–192 & E–193.
6. SEE LANDSCAPE PLANS FOR PLACEMENT OF HANDICAPPED PARKING SIGNS.
7. UNSPECIFIED SIGN PLACEMENT LOCATIONS TO BE SPECIFIED BY THE VAOT TRAFFIC SIGNING & MARKING SUPERVISOR.
8. UNLESS NOTED OTHERWISE, ALL SIGN POSTS SHALL BE 3 lb/ft STEEL FLANGED CHANNEL.

Ⓐ 4" SOLID WHITE DURABLE
Ⓑ 4" SOLID YELLOW DURABLE
Ⓒ 6" SOLID WHITE DURABLE
Ⓓ 12" SOLID WHITE DURABLE
Ⓔ 8" SOLID WHITE DURABLE

PROHIBITED
DUMPING HOUSEHOLD GARBAGE OR TRASH IN OIL ABOUT CONTAINER
PENALTIES $100 FINE 40 HOURS COMMUNITY SERVICE TITLE 24 V.S.A. SEC. 2201

ALL DOGS MUST BE ON LEASH

REVISIONS	BY

COPYRIGHT © 2001
CHAMPLAIN CONSULTING ENGINEERS
ALL RIGHTS RESERVED

CHAMPLAIN CONSULTING ENGINEERS
85 PRIM ROAD, P.O. BOX 453
COLCHESTER, VERMONT 05446
(802) 863–8060
(802) 864–1678 FAX

STATE OF VERMONT PAUL DUCHENEAU NO. 3567 REGISTERED PROFESSIONAL ENGINEER

INTERSTATE 89 SOUTHBOUND
WILLISTON INFORMATION CENTER
SIGNS & PAVEMENT MARKINGS

PROJECT # IM-BLDG(4) VERMONT
WILLISTON

DRAWN	CCE
CHECKED	PD
SCALE	1" = 40'
DATE	01/16/01
JOB NO.	93114
SHEET	C12sb

OF 19 SHEETS

CCE/MAC File: C:\SIGNS\MAC\93114-SIGNS\93-12sheet.dwg Plotted: 2001-01-15 14:02

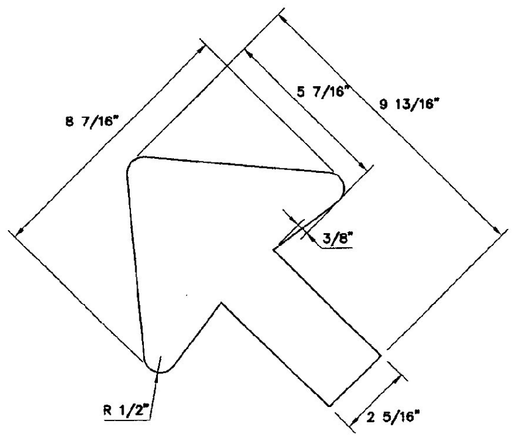

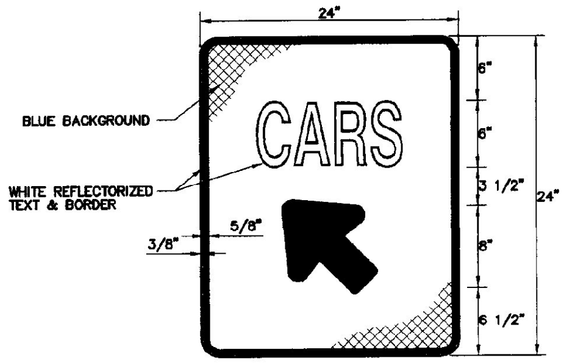

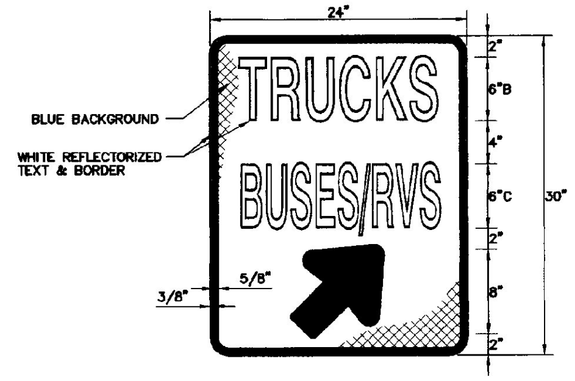

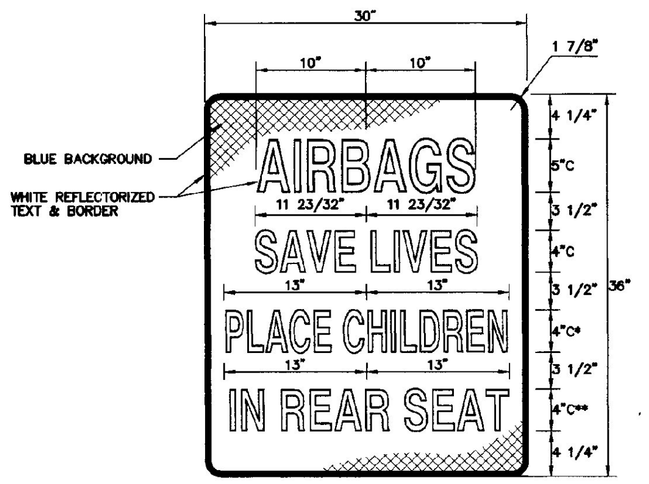

* REDUCE SPACING BY 24%
** REDUCE SPACING BY 14%

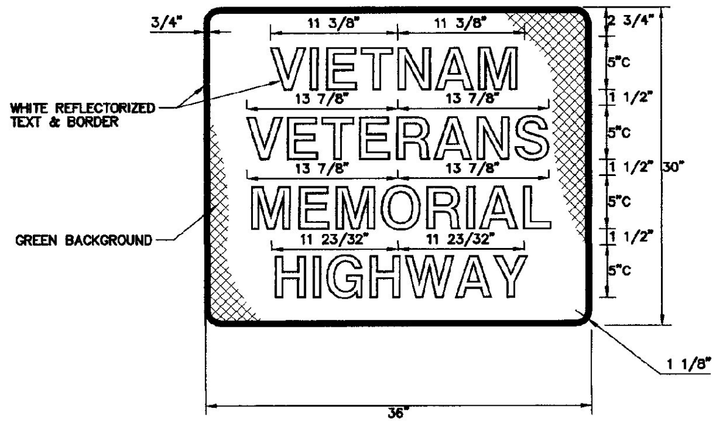

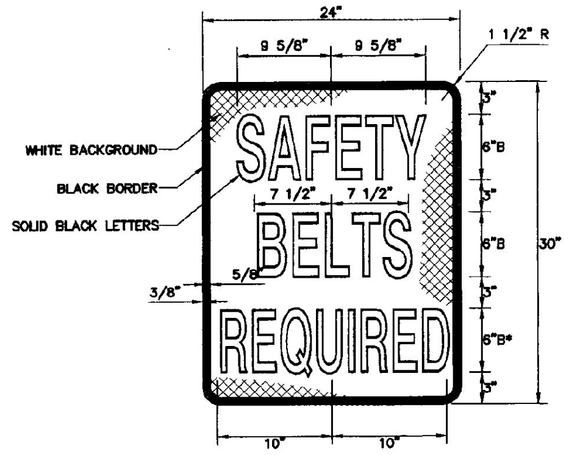

* REDUCE SPACING BY 22%

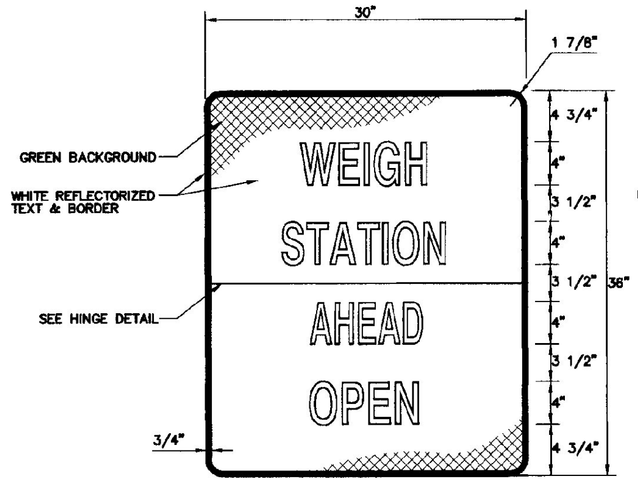

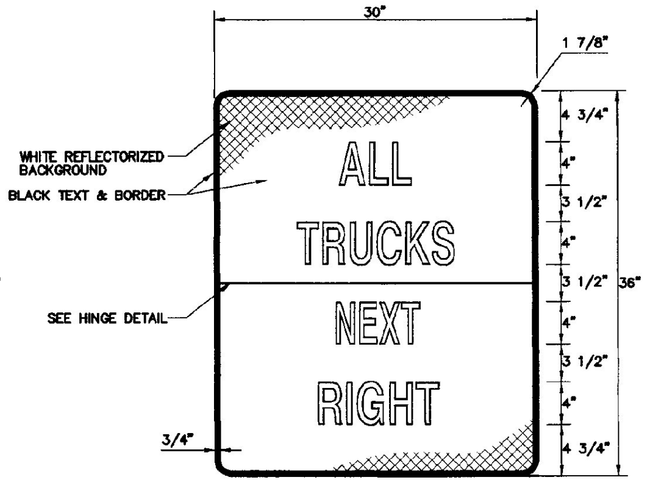

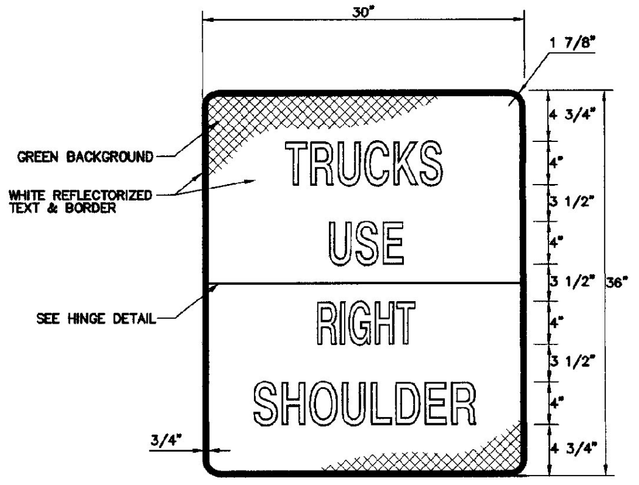

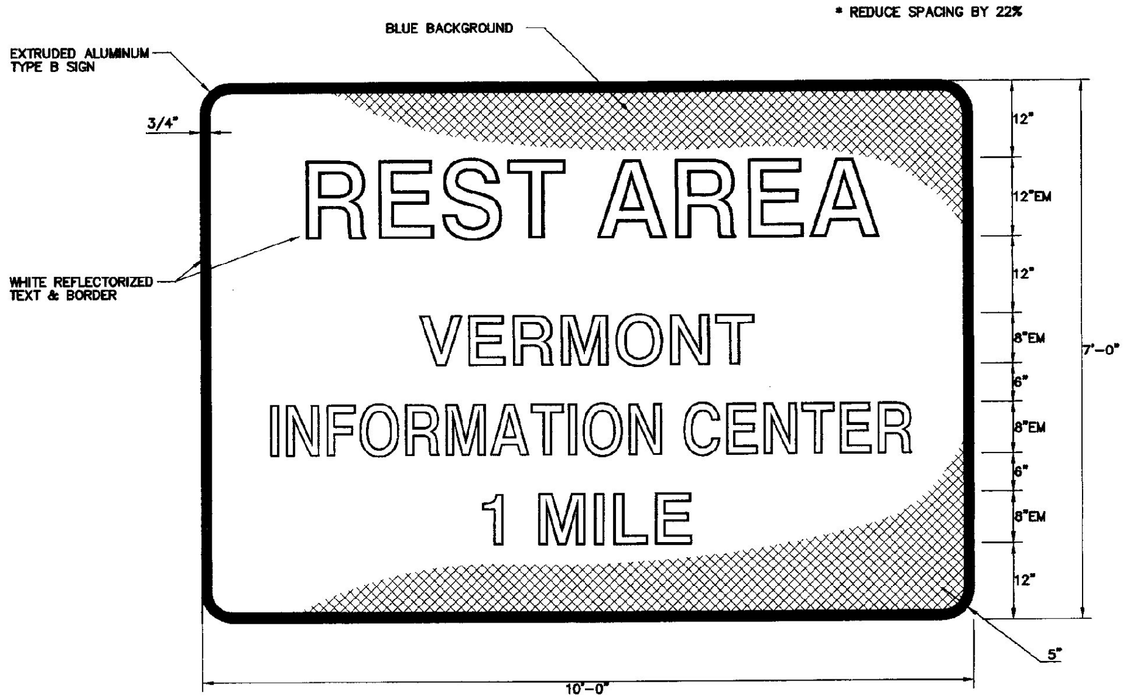

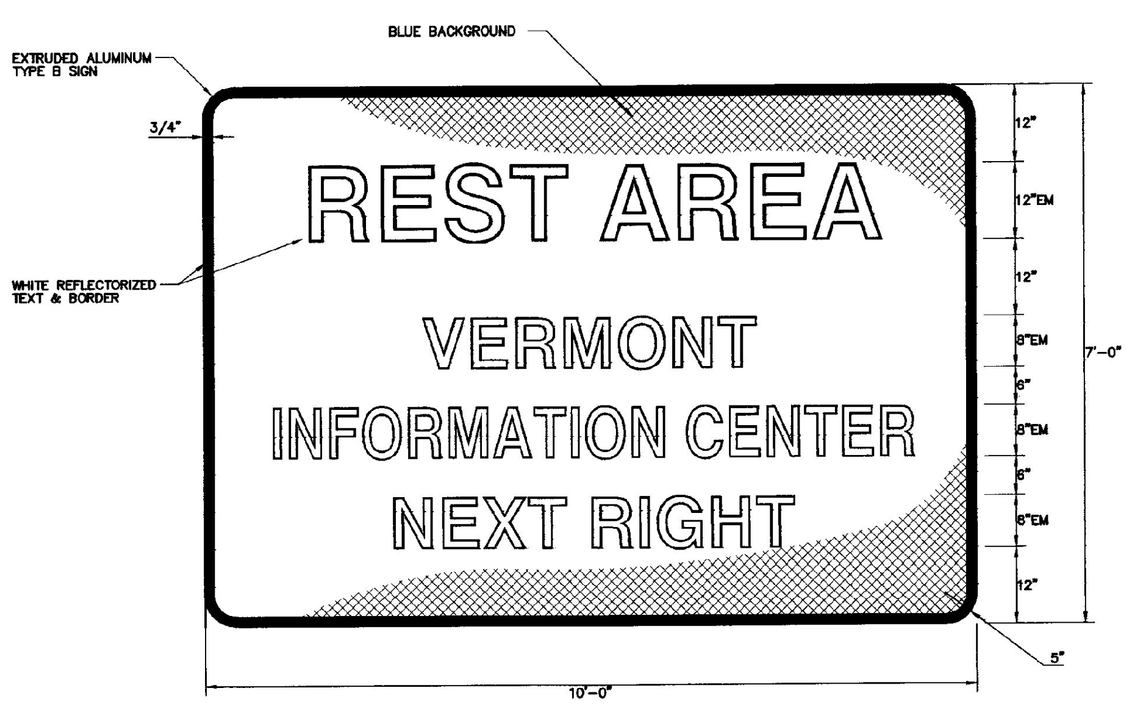

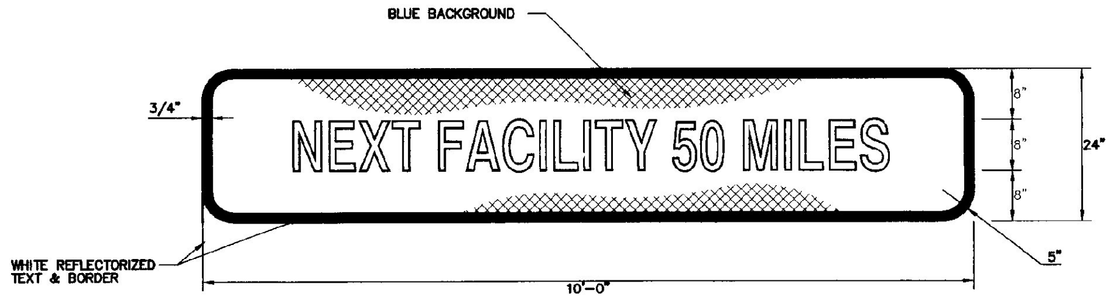

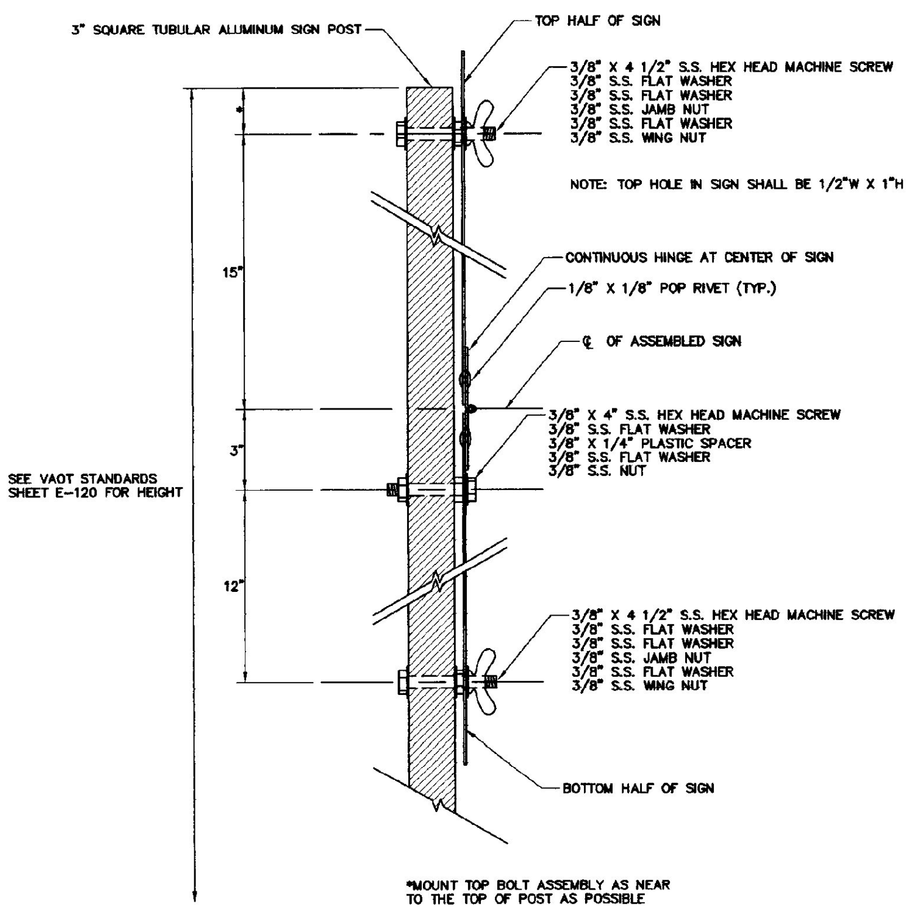

MATERIALS:

THE SIGN BASE MATERIAL MAY BE ANY OF THE FOLLOWING, WITH THE MINIMUM THICKNESSES NOTED:

FLAT SHEET ALUMINUM	
LESS THAN 24" X 24"	0.080"
WHEN USED ON GUIDE SIGNS	0.080"
24" X 24", 30" X 24"	0.080"
36" X 36", 45" X 36"	0.100"
GALVANIZED FLAT SHEET STEEL	
LESS THAN 24" X 24"	18 GAGE
WHEN USED ON GUIDE SIGNS	18 GAGE
24" X 24", 30" X 24"	16 GAGE
36" X 36", 45" X 36"	14 GAGE

THE REFLECTIVE MATERIAL SHALL BE WHITE REFLECTIVE SHEETING APPLIED TO THE ENTIRE BACKGROUND. THE TEXTS MAY BE LETTERING FILM, SILK SCREENED OR HAND PAINTED.

COLORS:

REFLECTORIZED WHITE TEXT ON REFLECTORIZED GREEN OR BLUE BACKGROUND AS INDICATED. THE GREEN AND BLUE SHALL CONFORM TO THOSE FOUND IN STANDARD COLOR TOLERANCE CHARTS AS PROVIDED BY THE USDOT AND THE FHA.

LETTERING:

LETTERS AND DIGITS SHALL CONFORM TO THE REQUIREMENTS FOUND IN THE PUBLICATION "STANDARD ALPHABETS FOR HIGHWAY SIGNS AND PAVEMENT MARKINGS" PRINTED BY THE FHA.

DESIGNS:

THE DESIGN OF THESE SIGNS SHALL CONFORM THE DETAILS SET FORTH IN THE MANUAL "STANDARD HIGHWAY SIGNS" AS SPECIFIED IN "THE MANUAL ON UNIFORM TRAFFIC CONTROL DEVICES".

SPECIFICATIONS:

THE SIGNS SHALL MEET THE STANDARD SPECIFICATIONS FOR "TRAFFIC SIGNS".

POSTS:

FINAL POST LENGTHS ARE TO BE DETERMINED IN THE FIELD. POST SIZES ARE BASED UPON INFORMATION FURNISHED ON THE STANDARD SHEETS: HOWEVER WHEN DEALING WITH W-SHAPE STEEL POSTS (STD. E-161), CONSULT THE TRAFFIC DESIGN SECTION, VAOT.

REVISIONS	BY

COPYRIGHT © 2001
CHAMPLAIN CONSULTING ENGINEERS
ALL RIGHTS RESERVED

CHAMPLAIN CONSULTING ENGINEERS
85 PRIM ROAD, P.O. BOX 453
COLCHESTER, VERMONT 05446
(802) 863-8060
(802) 864-1878 FAX

STATE OF VERMONT
PAUL DUCHESNEAU
No. 3567
REGISTERED
PROFESSIONAL ENGINEER

INTERSTATE 89 SOUTHBOUND
WILLISTON INFORMATION CENTER
SIGN DETAILS
PROJECT # IM-BLDG(4)
WILLISTON VERMONT

DRAWN	CCE
CHECKED	PD
SCALE	NONE
DATE	01/16/01
JOB NO.	93114
SHEET	C13sb

OF 19 SHEETS

CCE/JMC File:C:\93Q4\dwg\93114-SB99\C13sbsht.dwg Plotted: 2001-01-15 15:54:30

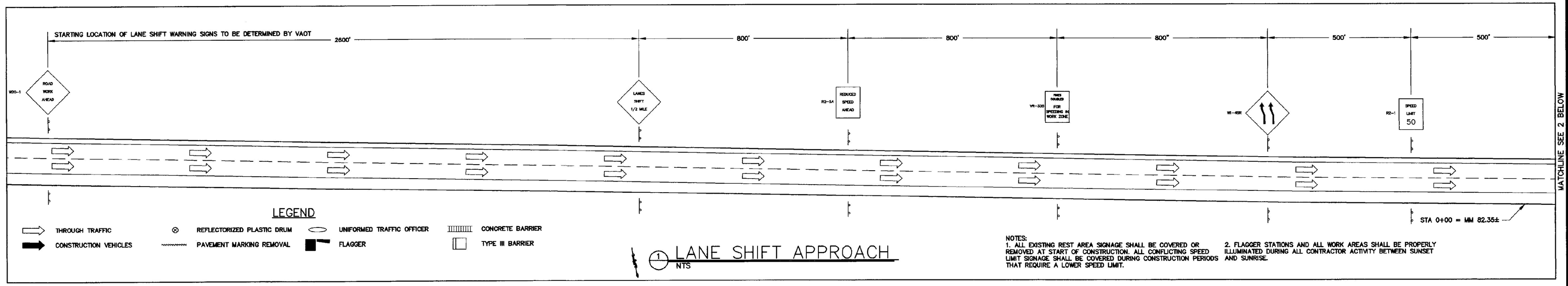

1 LANE SHIFT APPROACH
NTS

NOTES:
1. ALL EXISTING REST AREA SIGNAGE SHALL BE COVERED OR REMOVED AT START OF CONSTRUCTION. ALL CONFLICTING SPEED LIMIT SIGNAGE SHALL BE COVERED DURING CONSTRUCTION PERIODS THAT REQUIRE A LOWER SPEED LIMIT.
2. FLAGGER STATIONS AND ALL WORK AREAS SHALL BE PROPERLY ILLUMINATED DURING ALL CONTRACTOR ACTIVITY BETWEEN SUNSET AND SUNRISE.

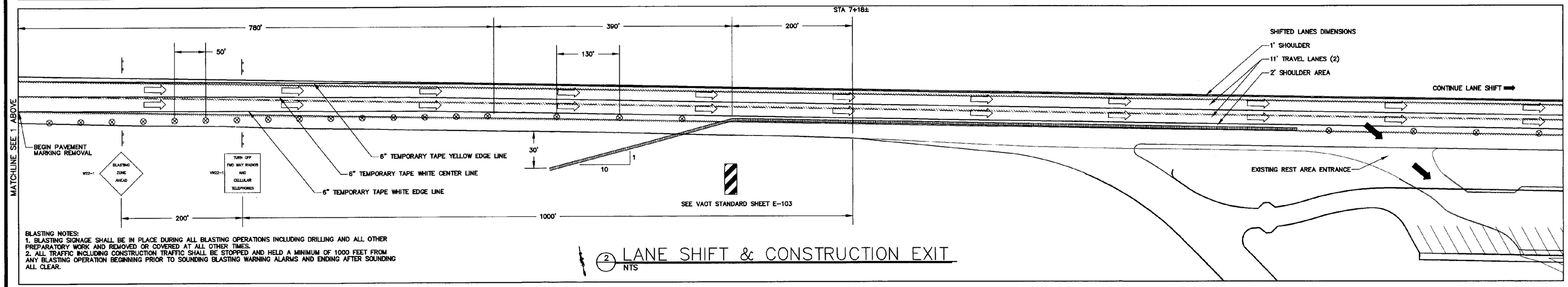

BLASTING NOTES:
1. BLASTING SIGNAGE SHALL BE IN PLACE DURING ALL BLASTING OPERATIONS INCLUDING DRILLING AND ALL OTHER PREPARATORY WORK AND REMOVED OR COVERED AT ALL OTHER TIMES.
2. ALL TRAFFIC INCLUDING CONSTRUCTION TRAFFIC SHALL BE STOPPED AND HELD A MINIMUM OF 1000 FEET FROM ANY BLASTING OPERATION BEGINNING PRIOR TO SOUNDING BLASTING WARNING ALARMS AND ENDING AFTER SOUNDING ALL CLEAR.

2 LANE SHIFT & CONSTRUCTION EXIT
NTS

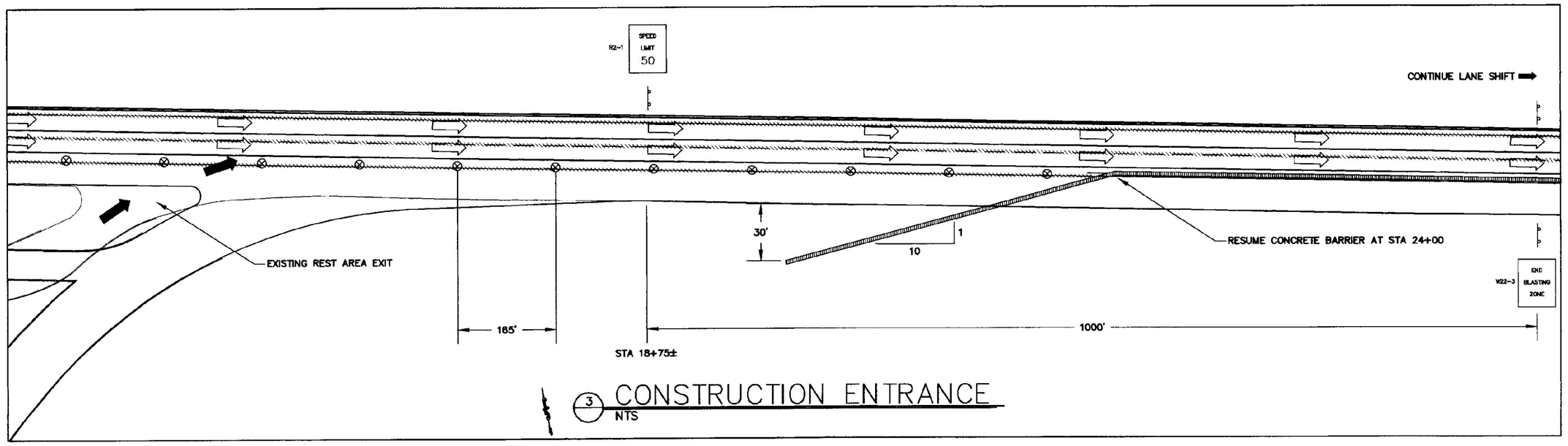

3 CONSTRUCTION ENTRANCE
NTS

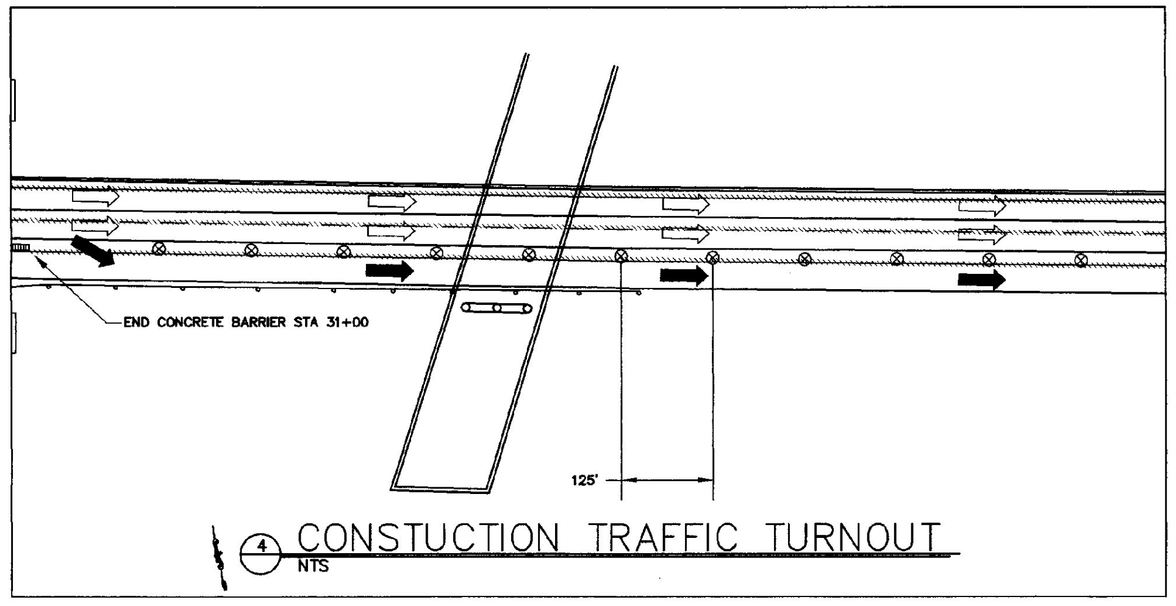

4 CONSTUCTION TRAFFIC TURNOUT
NTS

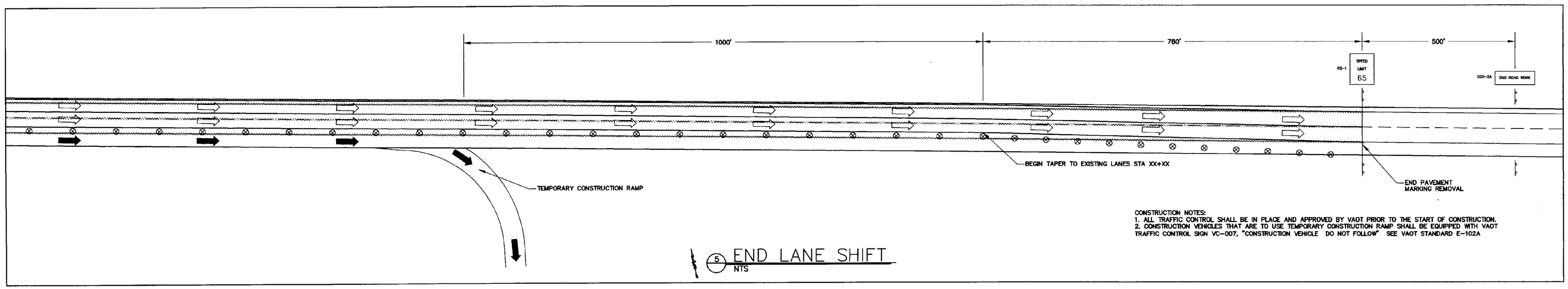

CONSTRUCTION NOTES:
1. ALL TRAFFIC CONTROL SHALL BE IN PLACE AND APPROVED BY VAOT PRIOR TO THE START OF CONSTRUCTION.
2. CONSTRUCTION VEHICLES THAT ARE TO USE TEMPORARY CONSTRUCTION RAMP SHALL BE EQUIPPED WITH VAOT TRAFFIC CONTROL SIGN VC-007, "CONSTRUCTION VEHICLE DO NOT FOLLOW" SEE VAOT STANDARD E-102A

5 END LANE SHIFT
NTS

REVISIONS	BY

COPYRIGHT © 2001
CHAMPLAIN CONSULTING ENGINEERS
ALL RIGHTS RESERVED

CHAMPLAIN CONSULTING ENGINEERS
85 PRIM ROAD, P.O. BOX 453
COLCHESTER, VERMONT 05446
(802) 863-8060
(802) 864-1878 FAX

STATE OF VERMONT
PAUL DUCHESNEAU
No. 3567
REGISTERED
PROFESSIONAL ENGINEER

INTERSTATE 89 SOUTHBOUND
WILLISTON INFORMATION CENTER
TRAFFIC CONTROL PLAN
WILLISTON VERMONT
PROJECT # IM-BLDG(4)

DRAWN	CCE
CHECKED	PD
SCALE	NONE
DATE	01/16/01
JOB NO.	93114
SHEET	C14sb

OF 19 SHEETS

CCE/ALC file: C:\JOBS\1993\93114-SBWB\Sb-14sheet.dwg Plotted: 2001-01-15 15:52:21

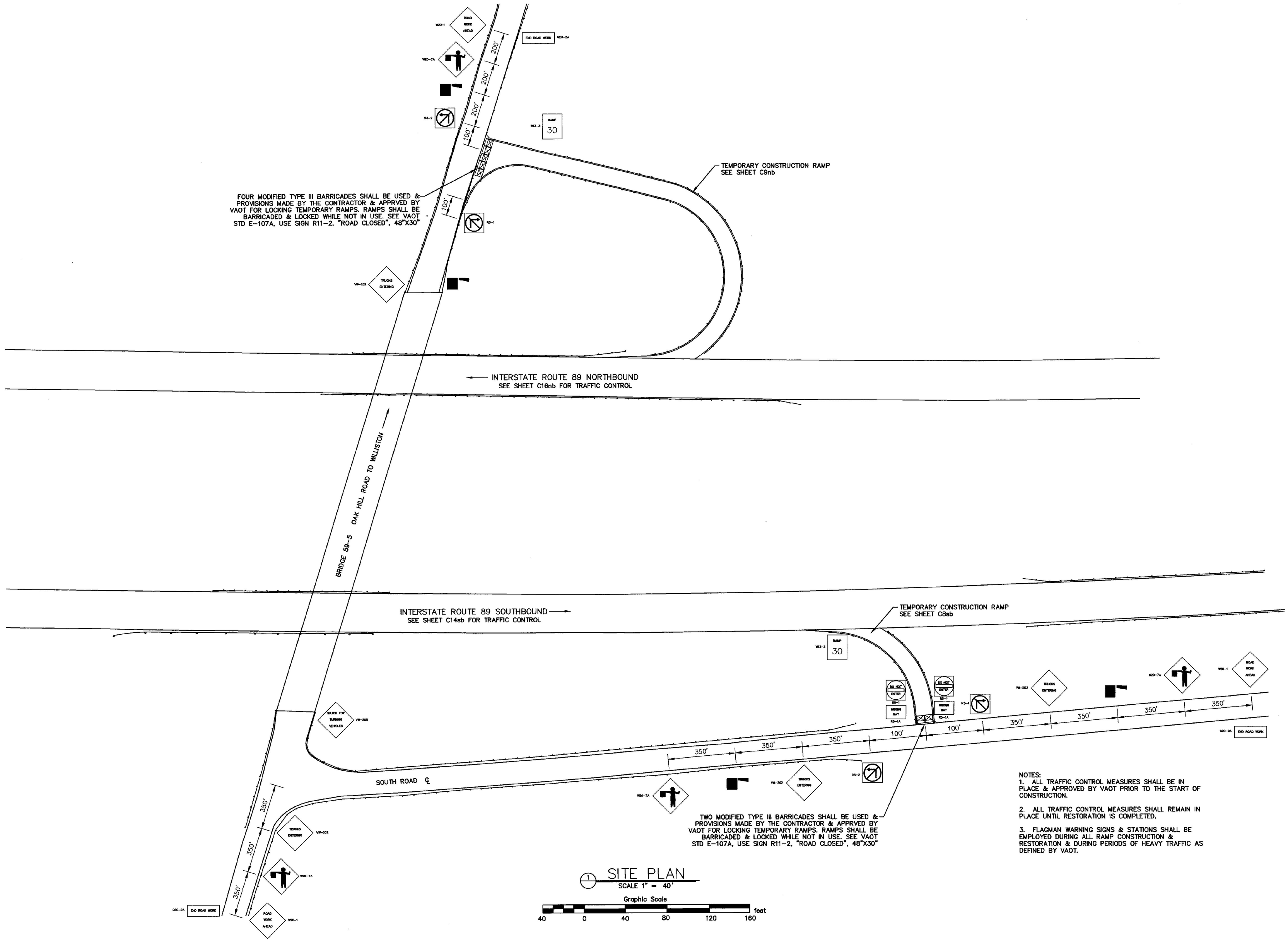

NOTES:
1. ALL TRAFFIC CONTROL MEASURES SHALL BE IN PLACE & APPROVED BY VAOT PRIOR TO THE START OF CONSTRUCTION.
2. ALL TRAFFIC CONTROL MEASURES SHALL REMAIN IN PLACE UNTIL RESTORATION IS COMPLETED.
3. FLAGMAN WARNING SIGNS & STATIONS SHALL BE EMPLOYED DURING ALL RAMP CONSTRUCTION & RESTORATION & DURING PERIODS OF HEAVY TRAFFIC AS DEFINED BY VAOT.

1 SITE PLAN
SCALE 1" = 40'

Graphic Scale
40 0 40 80 120 160 feet

REVISIONS	BY

COPYRIGHT © 2001
CHAMPLAIN CONSULTING ENGINEERS
ALL RIGHTS RESERVED

CHAMPLAIN CONSULTING ENGINEERS
85 PRIM ROAD, P.O. BOX 453
COLCHESTER, VERMONT 05446
(802) 863-8060
(802) 864-1878 FAX

STATE OF VERMONT
PAUL DUCHESNEAU
No. 3567
REGISTERED
PROFESSIONAL ENGINEER

INTERSTATE 89 SOUTHBOUND
WILLISTON INFORMATION CENTER
ADDITIONAL TRAFFIC CONTROL
WILLISTON VERMONT
PROJECT # IM-BLDG(4)

DRAWN	CCE
CHECKED	PD
SCALE	1" = 40'
DATE	01/16/01
JOB NO.	93114
SHEET	C15sb
OF	19 SHEETS

CCE/MLC File: C:\SDSK\PPM\93114-S899\SB-15sheet.dwg Plotted: 2001-01-15 15:57:36

GENERAL SPECIFICATIONS

The Standard Specifications shall refer to the Vermont Agency of Transportation Standard Specifications for Construction (1990 Edition). All site work shall also be completed in accordance with the Town of Williston's Public Works standards. Any discrepancies with the plans or specifications shall be reported to the Engineer prior to beginning that work.

A. Earthwork

1. The site shall be cleared of all debris and vegetation, and all topsoil shall be stripped prior to placing any fill material. Debris and vegetation shall be disposed of at an approved location.

2. The excavated material from on site shall not be used within five feet (5') of the building or under parking lots, roads or sidewalks. General imported fill material shall not be larger than two inches (2") or have more than 20% passing the NO. 200 sieve. All excess excavated material shall be disposed of at an approved location.

3. Grading

a. Perform all rough grading, including excavation, formation of embankments, shaping, sloping, compaction, construction of ditches, disposal of surplus or unsuitable material, and any work necessary to prepare the subgrades of all roadways, walks and parking areas. Grading shall be brought to the bottom of the base course under paved or surfaced areas and to within a minimum of 24 inches of finished grade under side slopes and/or embankment areas to receive loam along roadways, walks or parking areas.

b. Accomplish all excavation and fill within the slope and grade lines as indicated on the Drawings unless otherwise authorized in writing by the Owner. Parking lots shall be graded to full cross section width at sub-grade before placing any type of sub-base or pavement except that partial width construction is permissible where necessary for the maintenance of traffic.

c. Do not use frozen material in the construction of embankments

d. Place all material being placed in embankments in horizontal layers of uniform thickness across the full width of embankment, except when it is impractical to construct full width of the embankment and partial width layers are authorized by the Owner. Do not allow or place stumps, trees, rubbish or other unsuitable material in embankments. Begin layers of embankment at the deepest part of the fill.

e. Areas of soft, yielding or otherwise unsuitable material that will not meet compaction requirements shall be removed, replaced with suitable material and properly compacted at no cost to the Owner.

f. Place embankments for paved or surface areas in horizontal layers of depths which will result in layers of compacted material not exceeding 8 inches. Compact each layer as specified before placing each new layer. Use effective spreading equipment on each layer to obtain uniform thickness prior to compacting. Each layer shall be kept crowned to shed water to the outside edges of embankment and continuous leveling and manipulating will be required to assure uniform density. Construction equipment shall be routed over the entire surface of each layer.

g. If, during the construction of the embankments, there is any indication that serious bulging, cracking, or unsafe movement may occur, the placing of fill shall be stopped or retarded to allow the material to stabilize.

h. All ditches and drains shall be constructed so they will effectively drain the roadway or parking lot before any sub-base or surface course material is placed. In handling materials, tools and equipment, the Contractor shall protect the subgrade from damage. In no case shall vehicles be allowed to travel in a single track and form ruts. If ruts are formed, the subgrade shall be reshaped and compacted and any pockets of clay, sand or soft material that may have been left in the subgrade shall be removed, replaced with approved material and properly compacted at the Contractor's expense. The subgrade shall be kept in such condition that it will drain. Sub-base, base or surface material shall not be deposited on the sub-grade until the sub-grade has been checked and approved by the Owner. After the sub-grade has been approved, hauling shall not be done nor equipment moved over the sub-grade which will distort the cross section. A tolerance of 1/2 inch above or below the finished sub-grade will be allowed provided that this 1/2 inch above or below sub-grade is not maintained for a distance longer than 50 feet, and that the required cross section is maintained.

4. Compaction:

a. General: Control soil compaction during construction providing minimum percentage of density specified for each area classification.

b. Percentage of Maximum Density Requirements: Compact soil to not less than the following percentages of maximum dry density for soils which exhibit a well defined moisture-density relationship determined in accordance with ASTM D 2049, for soils which will not exhibit a well defined moisture-density relationship.

1. Lawn or unpaved areas: Compact top 6" of sub-grade and each layer of backfill or fill material to 90% maximum dry density.

2. Compaction under paved and surfaced areas: The entire area of each layer shall be uniformly compacted to at least the required minimum density by the use of compacting equipment consisting of rollers, compactors or a combination thereof. Earth-moving and other equipment not specifically manufactured for compaction purposes will not be considered as compaction equipment. Each layer for its full width shall be compacted to not less than 90 percent of the maximum dry density as determined by the Standard Method of Test for Moisture-Density Relations of Soils, ASTM-D698, Method C, except that the material in the top two feet of any embankment, immediately below the sub-grade shall be compacted to not less than 95 percent of the maximum dry density. The field density determination will be made by a qualified testing laboratory using a nuclear density gauge.

3. Concrete Slabs: Compact each layer of backfill or material to 95 % maximum dry density.

c. Moisture Control: Where sub-grades or layer of soil material must be moisture conditioned before compaction, uniformly apply water to surface of sub- grade, or layer of soil material, to prevent free water appearing on surface during or subsequent to compaction operations. Remove and replace, or scarify and air dry, soil material that is too wet to permit compaction to specified density.

B. Access Drives and Parking Lots:

1. The sub-grade shall be prepared in accordance with Section 203.12 of the Standard Specifications.

2. Bank run gravel (gravel for sub-base) shall meet the following grading requirements (Section 704.04):

Sieve Designation	Percentage by Weight Passing Square Mesh Sieves
No. 4	20 – 60
No. 100	0 – 12
No. 200	0 – 6

The gravel shall be uniformly graded from coarse to fine and the maximum size stone particle shall not exceed 2/3 of the thickness of the layer being placed. The gravel sub-base shall be compacted to 95% of the maximum dry density as determined by AASHTO-T99.

3. Crushed Gravel for Sub-base: All materials shall be secured from approved sources. This gravel shall consist of angular and round fragments of hard durable rock of uniform quality throughout, reasonably free from thin elongated pieces, soft or disintegrated stone, dirt, organic or other objectionable matter. The grading requirements shall conform to the following table (Section 704.05 – Fine):

Sieve Designation	Percentage by Weight Passing Square Mesh Sieves
2"	100
1 1/2"	90 – 100
No. 4	30 – 60
No. 100	0 – 12
No. 200	0 – 6

The crushed gravel shall be compacted to 95% of the maximum dry density as determined by AASHTO-T99.

4. Dense Graded Crushed Stone for Sub-base: Dense graded crushed stone for sub-base shall consist of clean, hard, uniformly graded, crushed stone. It shall be reasonably free from dirt, deleterious material and pieces which are structurally weak and shall meet the following requirements:

a. Source: This material shall be obtained from approved sources and the area from which this material is obtained shall be stripped and cleaned before blasting.

b. Grading: This material shall meet the requirements of the following table:

Sieve Designation	Percentage by Weight Passing Square Mesh Sieves
3 1/2"	100
3"	90 – 100
2"	75 – 100
1"	50 – 80
1/2"	30 – 60
No. 4	15 – 40
No. 200	0 – 6

5. Bituminous Concrete Pavement: The materials, grading and composition, placement, and finishing for bituminous concrete pavement (Type Is, IIs, IIIs, & IVs) shall meet the requirements of the Vermont Agency of Transportation Standard Specifications Section 702. Other requirements are as follows: Application of bituminous concrete pavement shall meet all the requirements of the Vermont Standard Specifications for Construction Section 406, or as periodically amended, but not limited to, the following:

a. Section 490 of the specifications.

b. Note that where the drawings reference a specific pavement type such as type IV, it shall be considered to be type IVS in conformance with this specification.

6. Stabilization Fabric: Stabilization fabric where required by the Engineer shall be Mirafi 500X or equal. The fabric shall be installed in accordance with manufacturer's requirements.

7. All pavement markings shall be VT. 708.10 Thermoplastic Pavement Markings.

C. Drainage Systems

1. All culverts and storm drains shall meet the requirements of Section 601 of the Standard Specifications.

2. At the Contractor's option, the following materials may be used for the storm drainage:

a. Polyvinyl Chloride pipe conforming to ASTM Specification D3034 or F679, (PVC) sewer pipe and fittings SDR 35.

b. Reinforced concrete pipe meeting the requirements of Section 710.01.

c. Corrugated Polyethylene pipe meeting the requirements of Section 710.03.

d. Corrugated aluminum alloy pipe meeting the requirements of Section 711.02.

D. Water

1. Materials:

a. Ductile Iron Water Pipe: Pipe shall be four-inch diameter Tyton Ductile Iron Class 52 conforming to current ANSI/ AWWA C151/ A21.51-81. Push-on joint pipe shall be minimum thickness Class 52. Push-on joint accessories shall conform to applicable requirements of ANSI/AWWA C111/A21.11.

Pipe shall be cement mortar lined on the inside in accordance with ANSI/AWWA C104/A21.4 except that the cement lining thickness shall not be less than three-sixteenths inch (3/16"). A plus tolerance of one-eighth inch (1/8") will be permitted.

Pipe outside coating shall be an asphaltic coating approximately 1 mil thick. The coatings shall be applied in accordance with The Handbook for Ductile Iron Pipe.

b. Fittings: Ductile Iron fittings shall conform to AWWA/ANSI-C104, Class 350 pounds working pressure, and be of a compact body design.

c. Gate Valves Resilient Seat: Valves shall be manufactured to meet all requirements of AWWA Specification C509 (latest version). Valves 12 inches and smaller shall be bubble tight, zero leakage at 200 psi working pressure. Valves shall have non-rising stems, open counterclockwise and be provided with a two-inch (2") square operating nut with arrow cast in metal to indicate direction of opening.

d. Valve Box: Cast Iron New England style slide-type; five and one-quarter inch (5 1/4") shaft; 5 inch by 6 foot.

Cover shall be cast iron, marked "WATER" and indicating direction of opening.

2. Installation

a. All pipe and fittings shall be inspected and tested in accordance with the manufacturer's specifications and the aforementioned AWWA Specifications. The Contractor shall furnish for approval certification from the pipe manufacturer that all tests have been performed with satisfactory results. Pipe shall not be installed without the Engineer's or the Town of Williston Fire Department's approval.

b. Pipe, fittings, and accessories shall be carefully handled to avoid damage. Prior to the date of acceptance of the project work by the Owner, the Contractor shall replace any new pipe or accessory found to be defective at any time, including after installation, at no expense to the Owner. All installation and testing shall be done in accordance with AWWA Standard C600-93 and ANSI Specification A21.11.

c. All pipe showing cracks shall be rejected. If cracks occur in the pipe, the Contractor may, at his own expense and with the approval of the Engineer, cut off the cracked portions at a point at least 12 inches from the visible limits of the crack and use the sound portion of the pipe. Conductivity wedges shall be installed at all joints. Three per joint (min.)

d. All pipe and fittings shall be cleared of all foreign matter and debris prior to installation and shall be kept clean until the time of acceptance by the Owner.

e. At all times, when the pipe laying is not actually in progress, the open ends of the pipe shall be closed by temporary watertight plugs or by other approved means. If water is in the trench when work is resumed, the plug shall not be removed until all danger of water entering the pipe has passed. The pipe shall be installed in trenches and at the line and grade shown on the Contract Drawings. Any deflection joints shall be within the limits specified by the manufacturer.

f. All piping and appurtenances connected to the equipment shall be supported so that no strain will be imposed on the equipment. (If the equipment manufacturer's specifications include that piping loads are not to be transferred, the Contractor shall submit certification of compliance).

g. Concrete thrust blocks shall be installed on all plugs, tees, and bends deflecting 11 1/4 degrees or more. Care shall be taken to ensure that concrete will not come in contact with flanges, joints, or bolts. The required area of thrust blocks are indicated on the plans or shall be as approved by the Engineer.

h. A minimum 18 inch vertical separation between the outside pipe surfaces shall be maintained where force mains cross water mains. Force mains shall cross water mains at or near right angles with one full length of water pipe centered on the force mains so both end joints are at maximum separation from the force main. Special structural support for the water main and the force main may be required.

i. There shall be no physical connection between the distribution system and any pipes, pumps, hydrants, or tanks which are supplied or may be supplied with a water that is, or may be contaminated.

j. All trenching safety standards shall be in conformance with all applicable State and Federal guidelines and as specified on the plans.

k. The Contractor shall, at all times, keep the trenches entirely free of water until all work is finished and trenches are ready for backfilling.

l. Valve boxes are to be installed on all buried valves. The boxes shall be cast iron with a minimum 5 1/4" diameter and long enough to extend from the valve to finished grade. The boxes shall enclose the operating nut and stuffing box of the valves. Valve boxes shall not transfer loads onto the valve.

Covers shall be close fitting and dirt tight with the top of the cover flush with the top of the box rim. Covers shall be marked "WATER" with an arrow indicating direction of opening.

m. Chlorination of the water service shall be conducted only after the service has been flushed and a clear stream is obtained as determined by the Engineer. All chlorination testing shall be done by an independent third party approved by the Engineer and the Town of Williston.

The Contractor shall furnish all labor, equipment, materials, and tools necessary to disinfect the pipe and appurtenances in accordance with the AWWA Standard for Disinfecting Water Mains C651-86 (tablet method not acceptable).

The method of disinfection shall be by the continuous feed method unless otherwise approved by the Engineer. After filling, flushing, and addition of chlorine solution, the chlorine concentration within the pipe shall be at least 10 mg/l. All disinfection shall be performed under the supervision of the Engineer. The disinfection process shall be deemed acceptable only after two samples of water from the flushed disinfected main show no evidence of bacteriological contamination.

n. The Contractor shall furnish all gauges, testing plugs, caps, and all other necessary equipment and labor to perform a pressure test. All pressure testing shall be done by an independent third party approved by the Engineer and the Williston Fire Department. The Contractor shall develop and maintain for two hours, 150 percent (150%) of the working pressure measured in pounds per square inch (200 psi – minimum). Failure to hold the designated pressure for the two hour period constitutes a failure of the section tested. No pipe installation shall be accepted if the leakage is greater than that determined by the following formula:

$$L = \frac{ND\sqrt{P}}{7,400}$$

Whichever is Less

$$L = \frac{SD\sqrt{P}}{133,200}$$

S = Length of Pipe Testing
L = Allowable Leakage in Gals/HR
D = Nominal Diameter of Pipe (")
P = Average Test Pressure (psi)
N = Number of Joints in the Pipeline Tested

All testing shall be conducted in accordance with AWWA C600-93 latest revision.

o. If there is an area where a cover of five feet (5') cannot be maintained over the water line, the Contractor shall notify the Engineer (in writing) for a revised design.

p. All revisions affecting the water line must be approved by the Department of Environmental Conservation – Water Supply Division. As-Built plans shall be provided to the Water Supply Division and the Town of Williston Fire Department.

E. Sanitary Sewer

1. Description

This item shall consist of the excavation and backfilling required for the re-routing of the gravity sanitary sewer main, removal and disposal of replaced facilities, and installation of service connections. This work shall include all pipe, manholes, structures and other appurtenances necessary to complete the system indicated in the drawings. All sanitary sewer materials and construction of same shall be as shown on the contract drawings and shall meet the requirements of the Town of Williston Public Works Department.

2. Materials

a. PVC Sewer Pipe: PVC sewer pipe shall conform in all respects to the latest revision of ASTM Specifications D-3034 or F679, Type PSM Polyvinyl Chloride (PVC) Sewer Pipe and Fittings, SDR 35. Wall thickness of all PVC pipe shall meet ASTM Specifications for SDR 35 pipe. All pipe and fittings shall be clearly marked as follows:

- Manufacturer's Name and Trademark
- Nominal Pipe Size – 4"
- Material Designation 12454C PVC
- Legend "Type PSM SDR 35 PVC Sewer Pipe" or "PS 46 PVC Sewer Pipe"
- Designation ASTM D-3034 or F679

Joints shall be push-on type using elastomeric gaskets and shall conform to ASTM D-3212. The gaskets shall be factory installed. The pipe shall be furnished in nominal 13-foot lengths. Sufficient numbers of short lengths and full machine fittings shall be provided for use at manholes and connections. All connections will require the use of manufactured fittings. Field fabricated, saddle-type connections will not be considered acceptable.

3. Installation

a. Excavations shall be made at a point at least six inches (12" where trench is in ledge) below the pipe invert to accommodate the bedding material. All excavations are to be kept dry while pipe is being laid and until each joint and pipe have been inspected by the Engineer and approval given to commence backfilling operations.

b. The bell end of the pipe shall face upgrade at all times and be placed in such a position as to make the invert even when the succeeding section is inserted. Where required by adverse grading conditions, the Contractor shall fill any gully to make a suitable bedding for the sewer pipe. The fill shall be pneumatically or mechanically compacted to a 90 % dry density (95% in roads) as determined by the AASHTO-T-99, Method A (Standard Proctor) test, upon which the six inches (6") of bedding material shall be placed. Any pipe which is not laid to grade and alignment shall be re-laid to the satisfaction of the Engineer. The bedding material shall be placed and compacted on each side of the pipe to a height of one-half the pipe diameter for the full width of the excavated trench and as shown on the accepted plans.

c. Backfill shall consist of approved material placed in six-inch (6") layers with each layer being thoroughly compacted to not less than 95 percent of maximum dry density as determined by the ASSHTO-T-99 Standard Proctor by means approved by the Engineer.

No stones in excess of one and one-half inch (1 1/2") diameter shall be placed within two feet (2') of the outside of the pipe. Particular precautions shall be taken in placement and compaction of the backfill material in order not to damage and/or break the pipe. The backfill shall be brought up evenly on both sides of the pipe for its full length. Walking or working on the completed pipeline except as may be necessary in tamping or backfilling shall not be permitted until the trench has been backfilled to a height of at least two feet (2') on the top of the pipes. During construction, all openings to the pipe lines shall be protected from the entering of earth or other materials.

d. Leakage Tests and Allowances for Gravity Sewers: Prior to testing for acceptance, the pipe should be cleaned by passing through the pipe a full gauge squeegee. It shall be the responsibility of the Contractor to have the pipe cleaned.

Immediately following the pipe cleaning, the pipe installation shall be tested with low-pressure air. Air shall be slowly supplied to the plugged air installation until the internal air pressure reaches 4.0 pounds per square inch greater than the average back pressure of any groundwater that may submerge the pipe. At least two minutes shall be allowed for temperature stabilization before proceeding further.

The pipeline shall be considered acceptable when tested at an average pressure of 3.0 pounds per square inch greater than the average back pressure of any groundwater that may submerge the pipe if:

i. the total rate of air loss from any section tested in its entirety between manhole cleanout structures does not exceed 2.0 cubic feet per minute; or

ii. the section under test does not lose air at a rate greater than 0.0030 cubic feet per minute per square foot of internal pipe surface.

The requirements of this specification shall be considered satisfied if the time required in seconds for the pressure to decrease from 3.5 to 2.5 pounds per square inch greater than the average back pressure of any groundwater that may submerge the pipe is not less than that computed according to the following table:

MINIMUM TEST TIME FOR VARIOUS PIPE SIZES

Diameter (Inches)	Time (Seconds/100 Feet)
4	18
6	40
8	70

e. Vacuum Test: This method of testing manholes for leakage involves the use of a device for sealing the top of the manhole cone section and pumping the air out of the manhole, creating a vacuum and holding this vacuum for a prescribed period of time. The procedure for this test is as follows:

1. All lifting holes and exterior joints shall be filled and painted with an approved non-shrinking mortar. The completed manhole shall not be backfilled prior to testing. Manholes which have been backfilled shall be excavated to expose the entire exterior prior to vacuum testing or the manhole shall be tested for leakage by means of the exfiltration leakage test.

2. All pipes and other openings into the manhole shall be suitably plugged in a manner to prevent displacement.

3. A plate with an inflatable rubber ring the size of the top of the manhole shall be installed by inflating the ring with air to a pressure adequate to prevent leakage of air between the rubber ring and the manhole wall.

4. Air shall then be pumped out of the manhole through an opening in the plate until a vacuum is created inside of the manhole equal to 10 inches of mercury on an approved vacuum gauge. The removal of air shall then be stopped and the test begun.

5. The manhole shall pass this test if the vacuum holds at 10" Hg or drops no lower than 9" Hg within the following times:

Depth of 4' Diameter Manhole	Time: Minutes	Seconds
0' – 10'	2	0
10' – 15'	2	30
15' – 20'	3	0
20' – 25'	3	30

6. If the vacuum drop exceeds 1" Hg during the specified time periods, the manhole shall be resealed and steps 2 through 5 above repeated until the vacuum holds for the specified time.

7. After the manhole passes the vacuum test, it shall be backfilled carefully so that no leaks are created. If the manhole is disturbed in any way during backfill, it shall be vacuum tested according to steps 1 through 5 above. If the manhole fails the vacuum test, the Contractor shall test the manhole using the manhole exfiltration test.

8. The Contractor shall provide the Engineer with a written log of each manhole leakage test result.

9. Manholes shall be tested and accepted prior to building manhole inverts.

f. The Contractor shall be responsible for verifying the location and maintaining the integrity of all utilities shown on the plan.

g. The Contractor shall coordinate all construction with the Town of Williston and the Vermont Agency of Transportation.

Pressurization:

i. Each valved section of pipe shall be filled with water slowly and the specified test pressure, based on the elevation of the lowest point of the line or section under test and corrected to the elevation of the test gauge, shall be applied by means of a pump connected to the pipe.

ii. Air Removal: Before applying the specified test pressure, air shall be expelled completely from the pipe valves.

iii. Examination: All exposed pipe, fittings, valves and joints shall be examined carefully during the test. Any damaged or defective pipe, fittings or valves that are discovered following the pressure test shall be repaired or replaced with sound material and the test shall be repeated.

Leakage Test: A leakage test shall be conducted concurrently with the pressure test.

i. Leakage shall be defined as the quantity of water that must be supplied into the newly laid pipe, or any valved section thereof, to maintain pressure within 5 psi of the specified test pressure after the air in the pipeline has been expelled and the pipe has been filled with water.

ii. Allowable Leakage: No pipe installation will be accepted if the leakage is greater than that determined by the following formula:

$$L = \frac{ND\sqrt{P}}{7400}$$

S = Length of Pipe Testing
L = Allowable Leakage in Gals/HR
D = Nominal Diameter of Pipe (")
P = Average Test Pressure (psi)
N = Number of Joints in the Pipeline Tested

F. Underground Utilities

For underground electrical and telephone (cable) services, the Contractor shall trench, place bedding, place conduit, and backfill in accordance with the utility company's requirements.

REVISIONS	BY

COPYRIGHT © 2001
CHAMPLAIN CONSULTING ENGINEERS
ALL RIGHTS RESERVED

CHAMPLAIN CONSULTING ENGINEERS
85 PRIM ROAD, P.O. BOX 453
COLCHESTER, VERMONT 05446
(802) 863-8060
(802) 864-1878 FAX

STATE OF VERMONT
PAUL DUCHESNEAU
No.3587
REGISTERED
PROFESSIONAL ENGINEER

INTERSTATE 89 SOUTHBOUND
WILLISTON INFORMATION CENTER
SPECIFICATIONS
WILLISTON PROJECT # IM-BLDG(4) VERMONT

DRAWN	CCE
CHECKED	PD
SCALE	NONE
DATE	01/16/01
JOB NO.	93114
SHEET	C16sb

OF 19 SHEETS

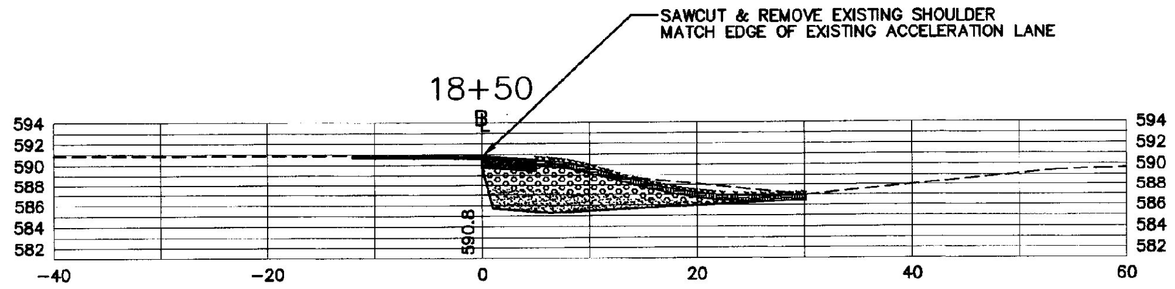

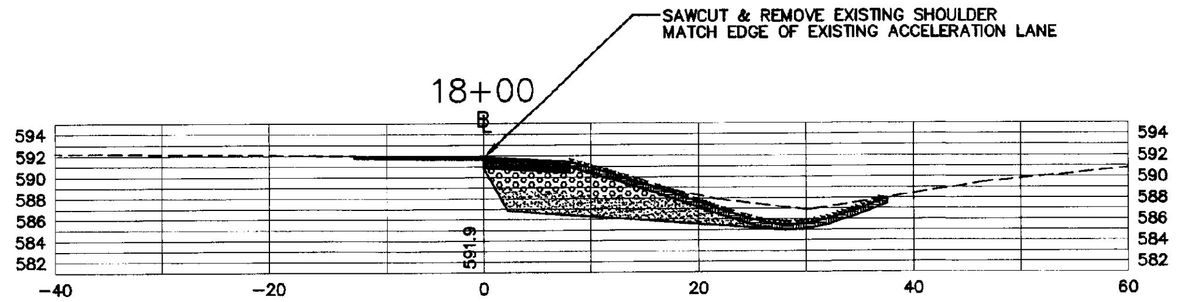

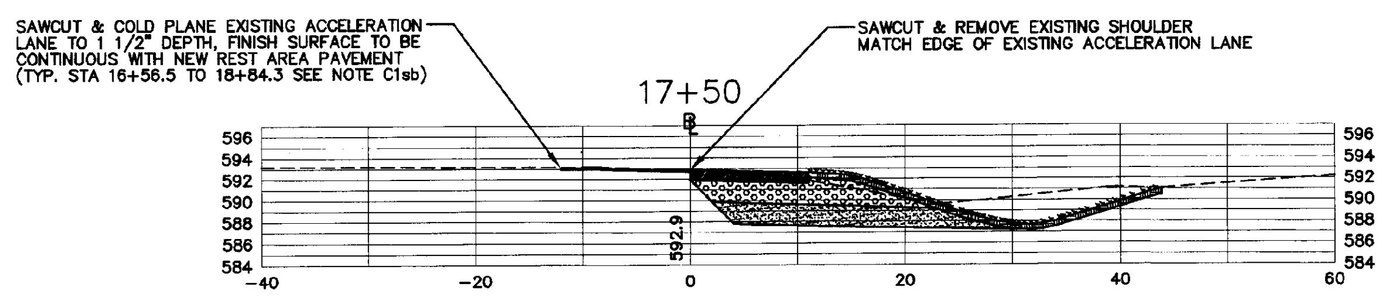

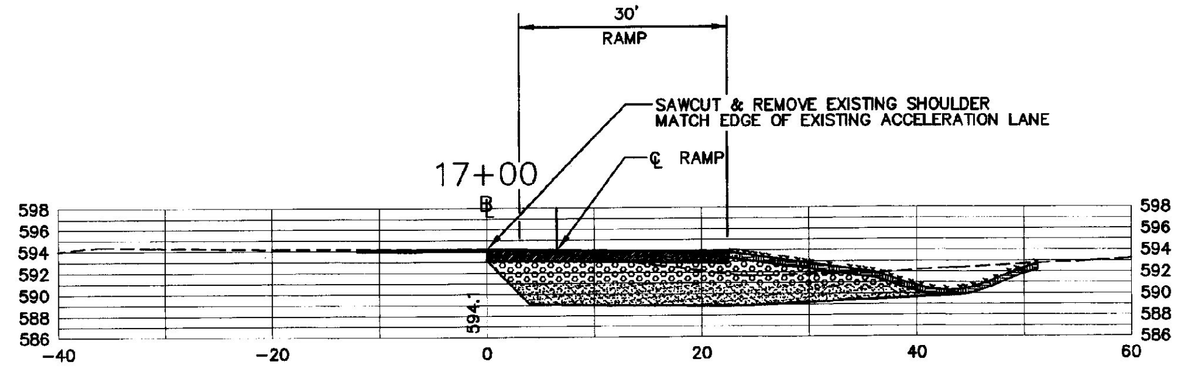

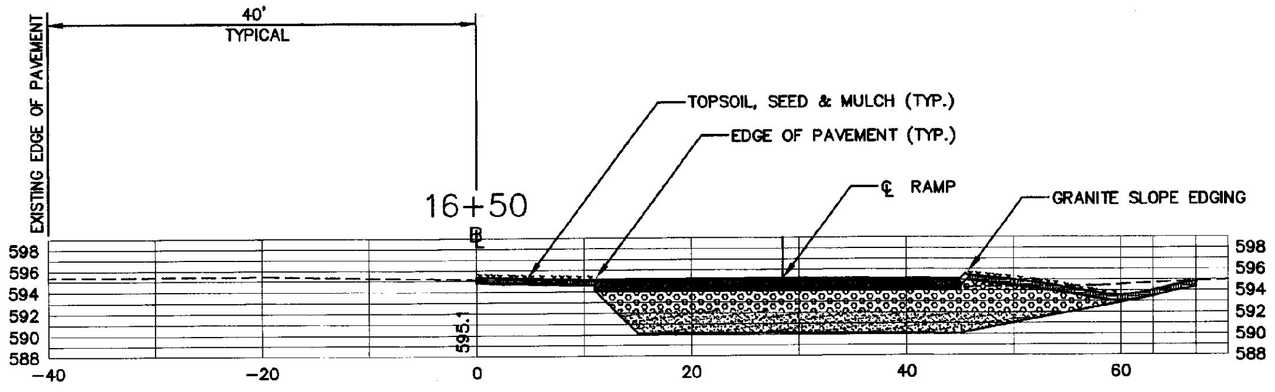

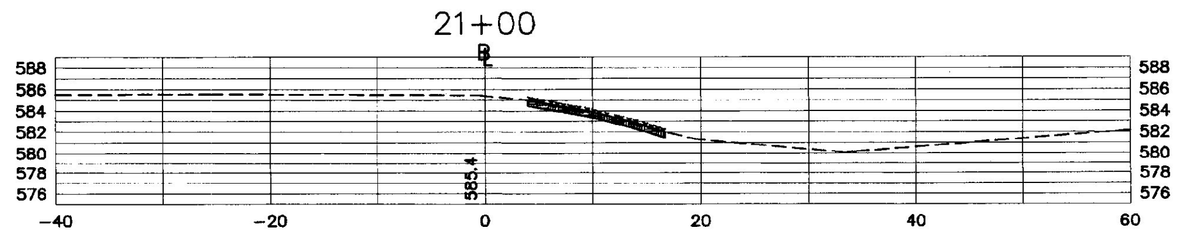

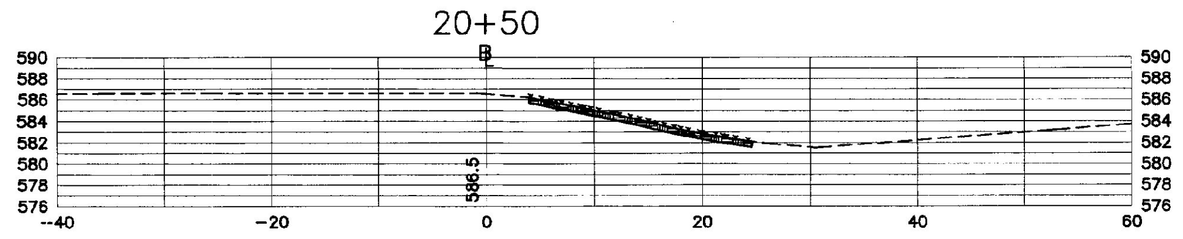

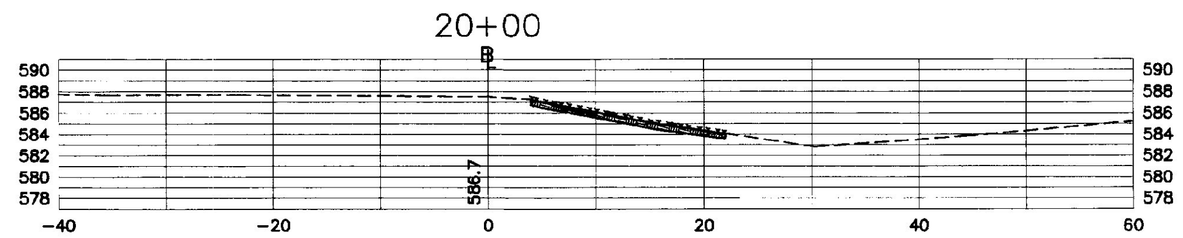

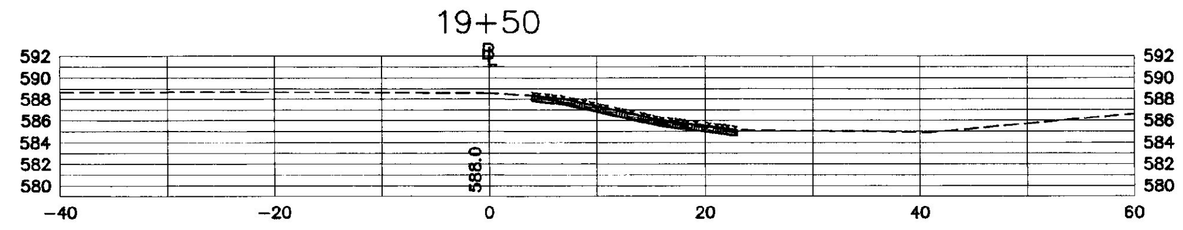

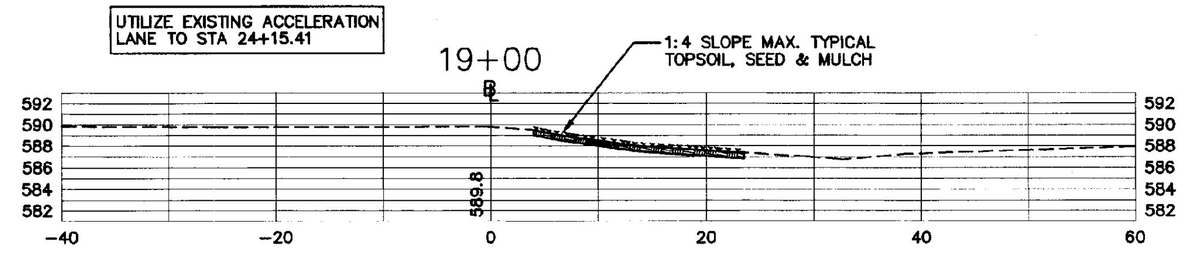

REVISIONS	BY

COPYRIGHT © 2001
CHAMPLAIN CONSULTING ENGINEERS
ALL RIGHTS RESERVED

CHAMPLAIN CONSULTING ENGINEERS
85 PRIM ROAD, P.O. BOX 453
COLCHESTER, VERMONT 05446
(802) 863-8060
(802) 864-1878 FAX

STATE OF VERMONT
PAUL DUCHESNEAU
No. 3567
REGISTERED
PROFESSIONAL ENGINEER

INTERSTATE 89 SOUTHBOUND
WILLISTON INFORMATION CENTER
STA 16+50-21+00 CROSS SECTIONS
WILLISTON VERMONT
PROJECT # IM-BLDG(4)

DRAWN	CCE
CHECKED	PD
SCALE	1" = 10'
DATE	01/16/01
JOB NO.	93114
SHEET	C17sb

OF 19 SHEETS

C:\CAD\JOBS\93114-93913B-1\sheet.dwg Plotted: 2001-JAN-15 15:29:20

23+50

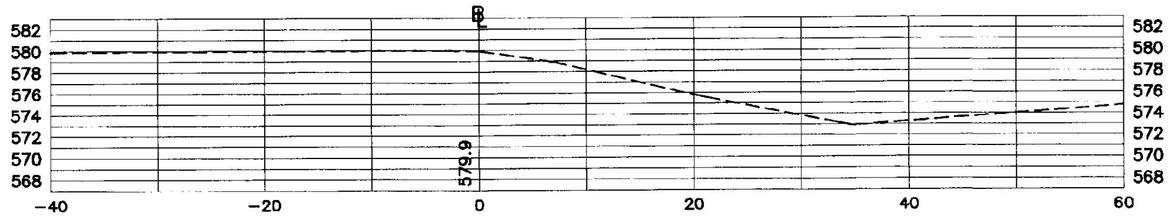

23+00

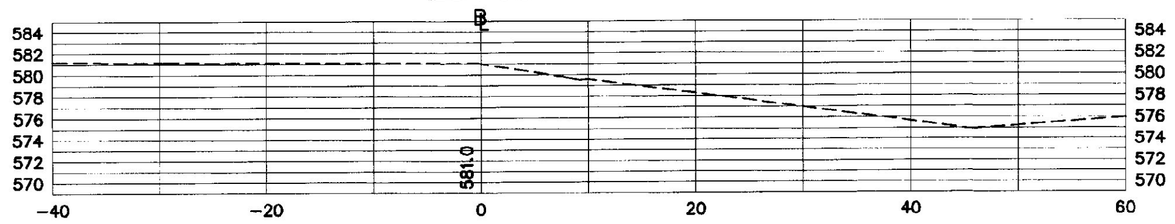

22+50

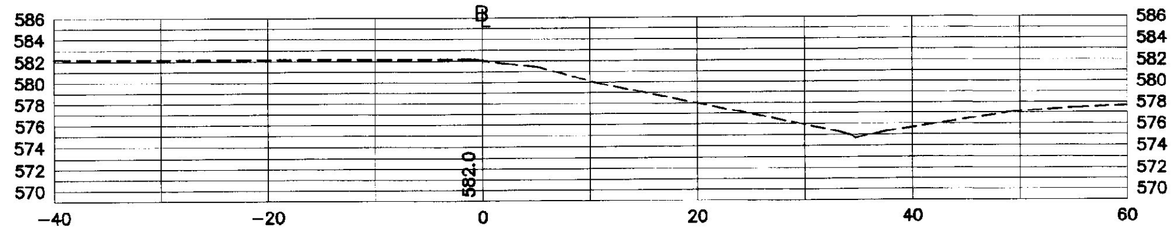

22+00

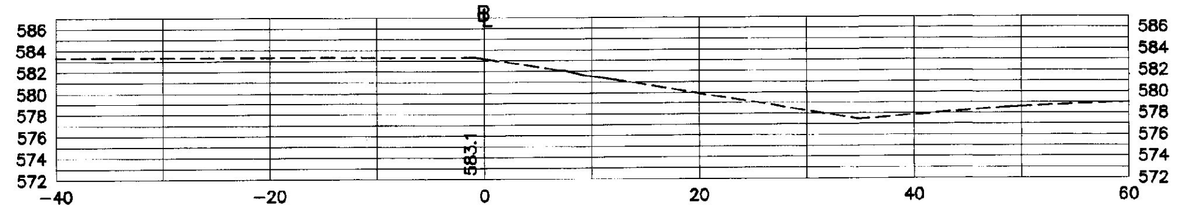

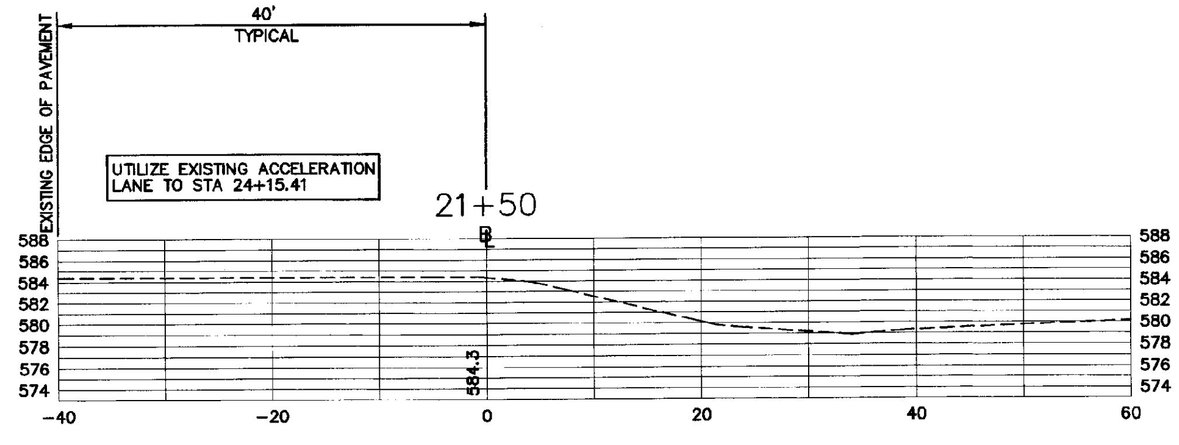

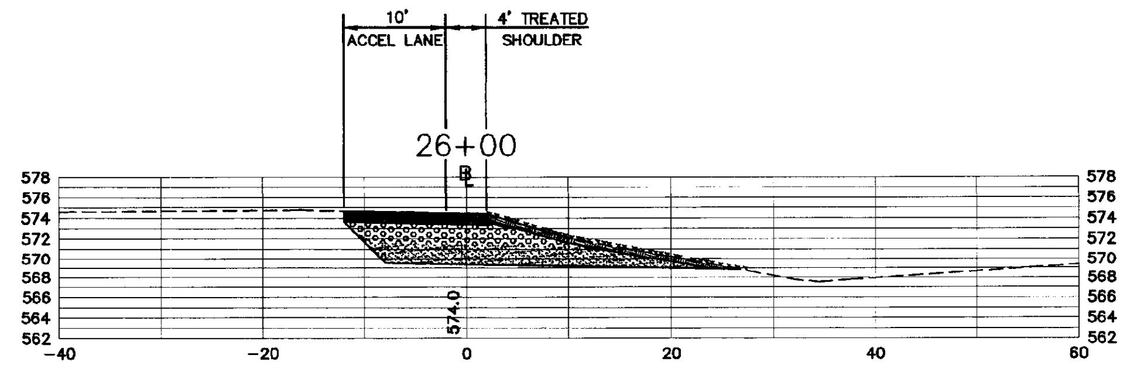

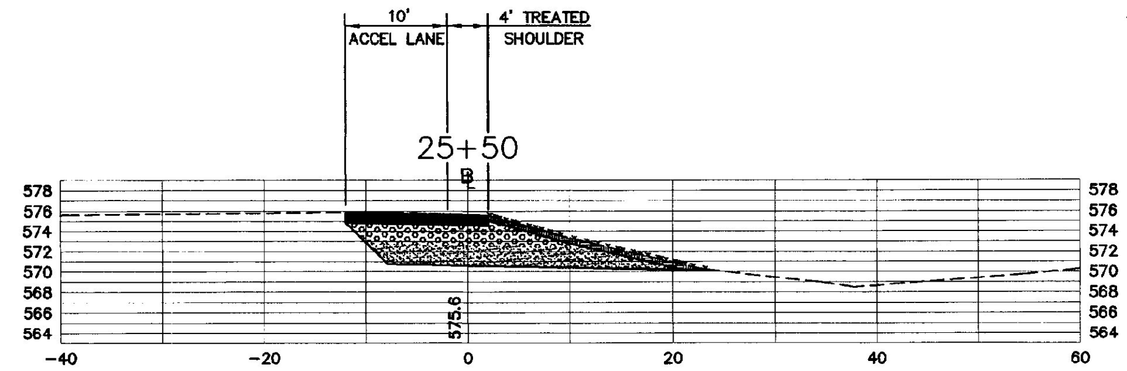

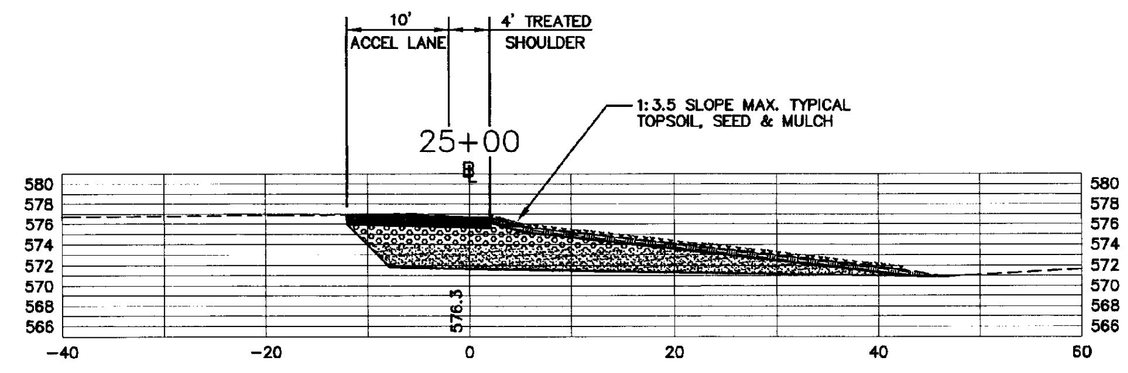

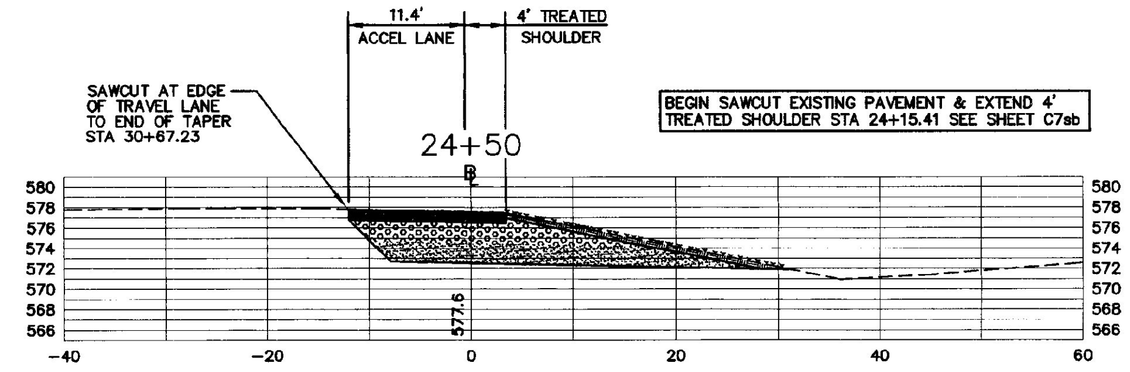

24+00

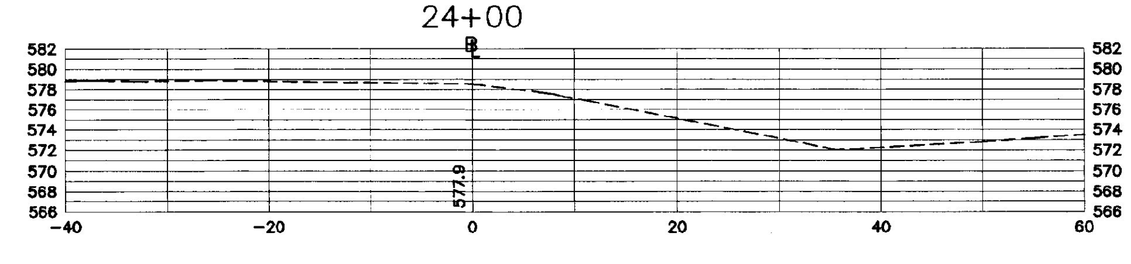

REVISIONS	BY

COPYRIGHT © 2001
CHAMPLAIN CONSULTING ENGINEERS
ALL RIGHTS RESERVED

CHAMPLAIN CONSULTING ENGINEERS
85 PRIM ROAD, P.O. BOX 453
COLCHESTER, VERMONT 05446
(802) 863-8060
(802) 864-1878 FAX

STATE OF VERMONT
PAUL DUCHESNEAU
No. 8567
REGISTERED
PROFESSIONAL ENGINEER

INTERSTATE 89 SOUTHBOUND
WILLISTON INFORMATION CENTER
STA 21+50-26+00 CROSS SECTIONS
WILLISTON VERMONT
PROJECT # IM-BLDG(4)

DRAWN	CCE
CHECKED	PD
SCALE	NONE
DATE	01/16/01
JOB NO.	93114
SHEET	C18sb

OF 19 SHEETS

CCE/MLC File C:\SCDATA\work\93114-3899\SB-1basket.dwg Plotted:2001-01-15 162004

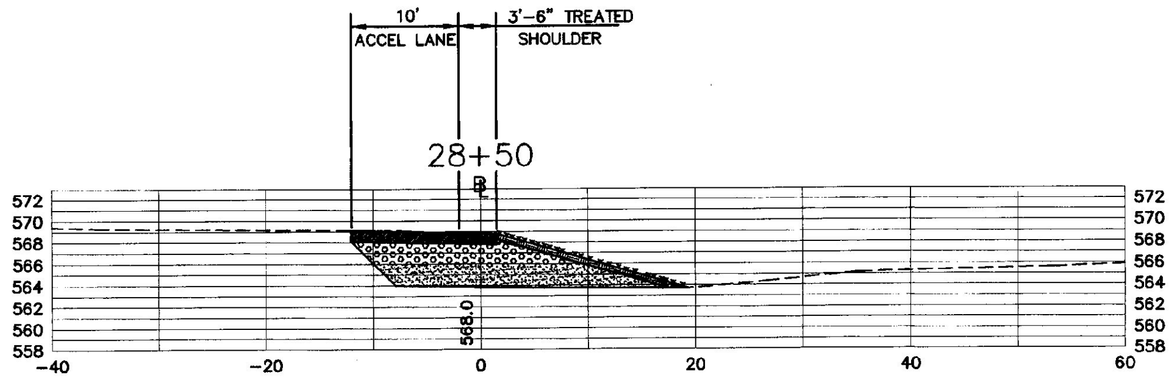

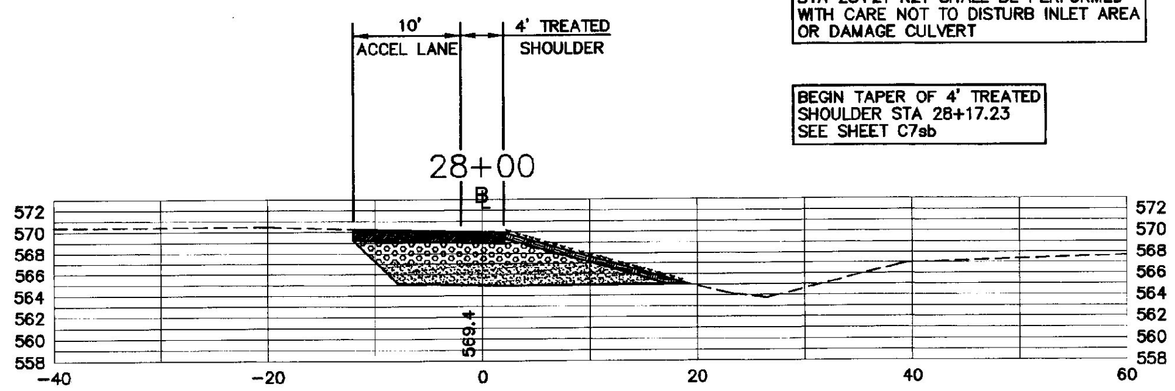

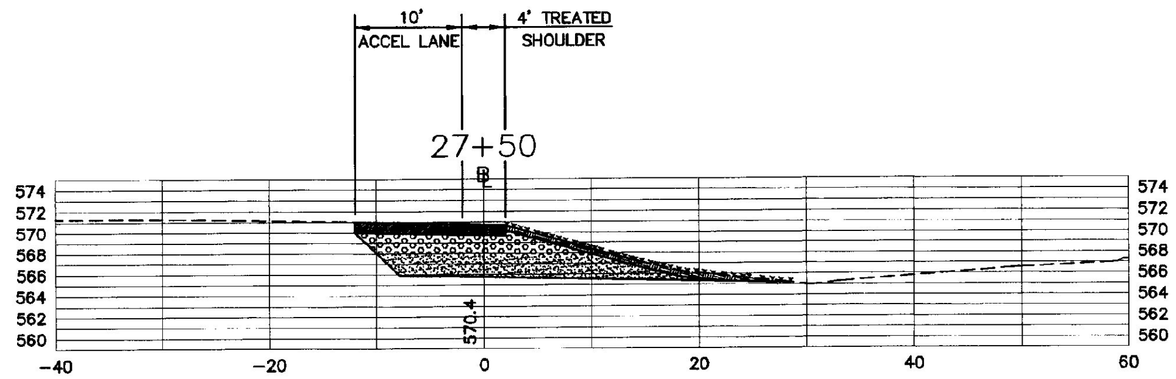

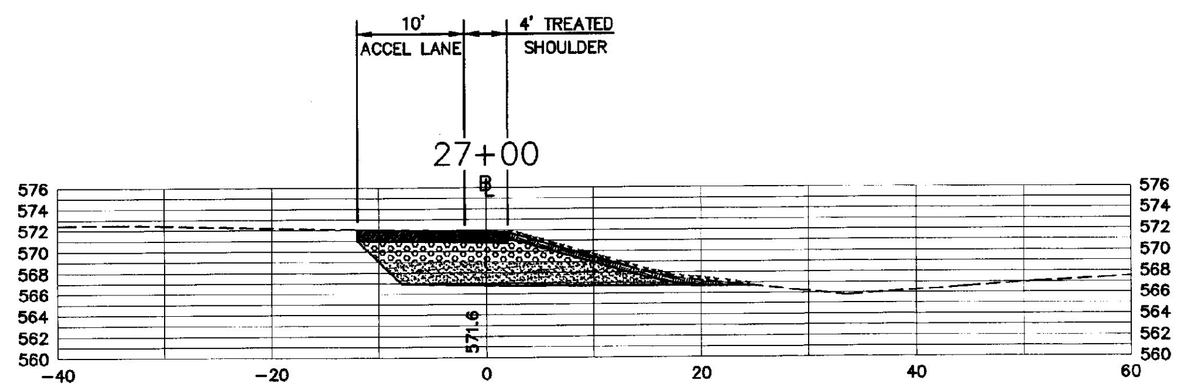

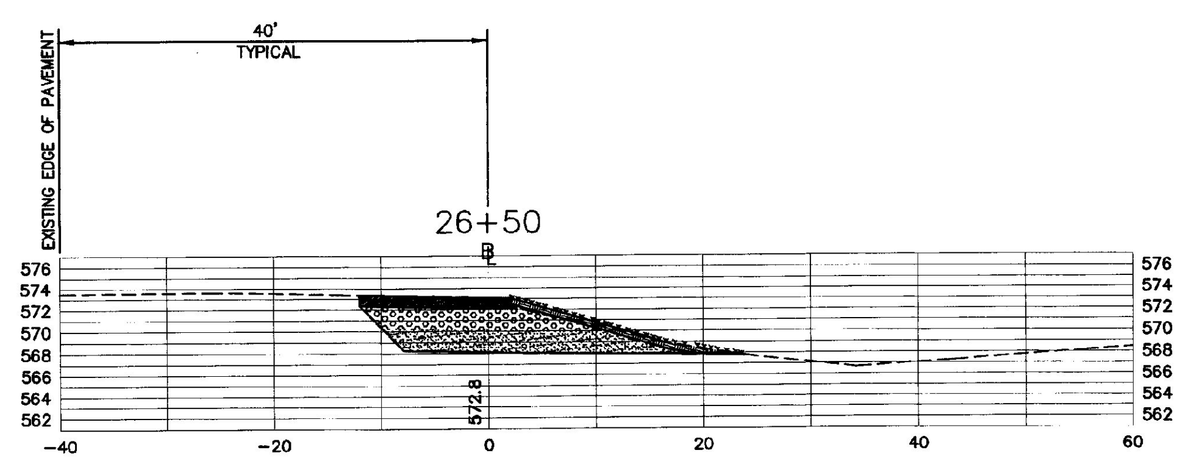

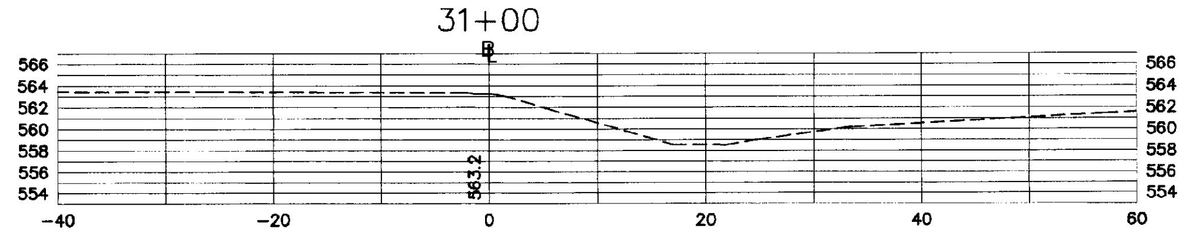

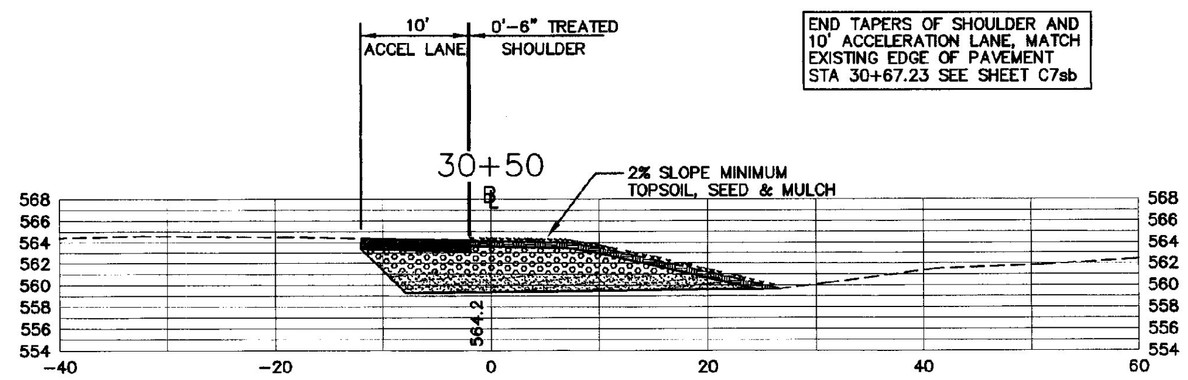

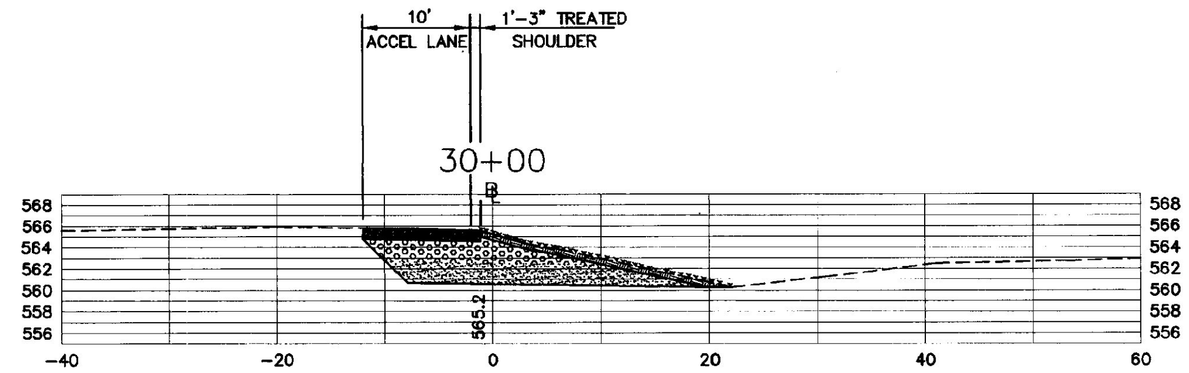

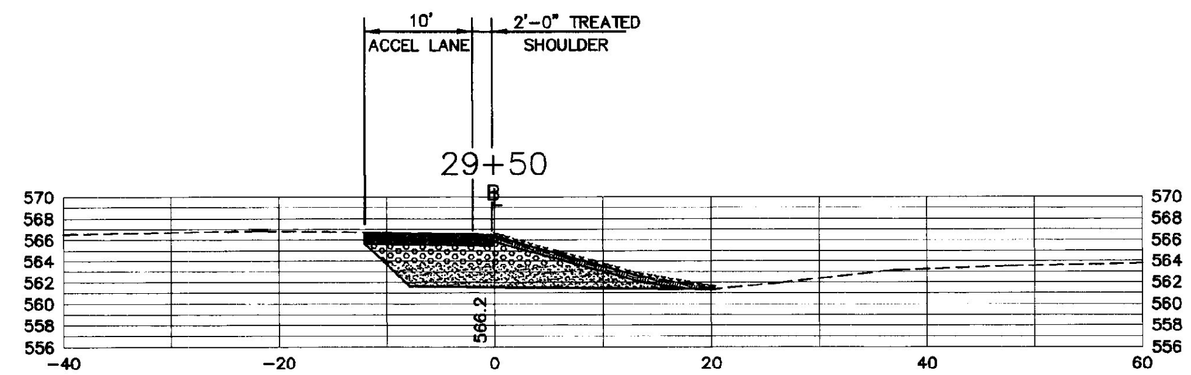

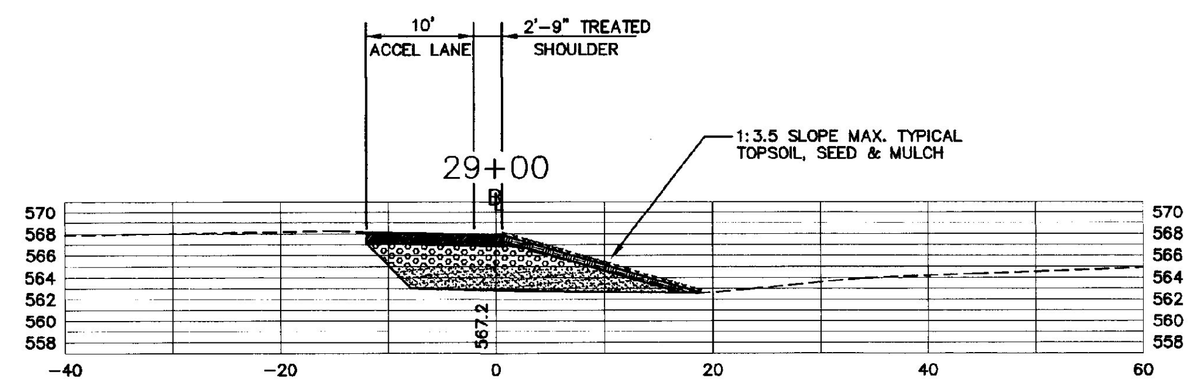

REVISIONS	BY

COPYRIGHT © 2001
CHAMPLAIN CONSULTING ENGINEERS
ALL RIGHTS RESERVED

CHAMPLAIN CONSULTING ENGINEERS
85 PRIM ROAD, P.O. BOX 453
COLCHESTER, VERMONT 05446
(802) 863-8060
(802) 864-1678 FAX

PAUL DUCHESNEAU No. 3567 REGISTERED PROFESSIONAL ENGINEER STATE OF VERMONT

INTERSTATE 89 SOUTHBOUND
WILLISTON INFORMATION CENTER
STA 26+50-31+00 CROSS SECTIONS
VERMONT
WILLISTON
PROJECT # IM-BLDG(4)

DRAWN	CCE
CHECKED	PD
SCALE	NONE
DATE	01/16/01
JOB NO.	93114
SHEET	C19sb

OF 19 SHEETS

DOS://AutoCAD File:C:\SOSX\DWG\93114-SB99\SB-19sheet.dwg Plotted:2001-01-15 16:01:05

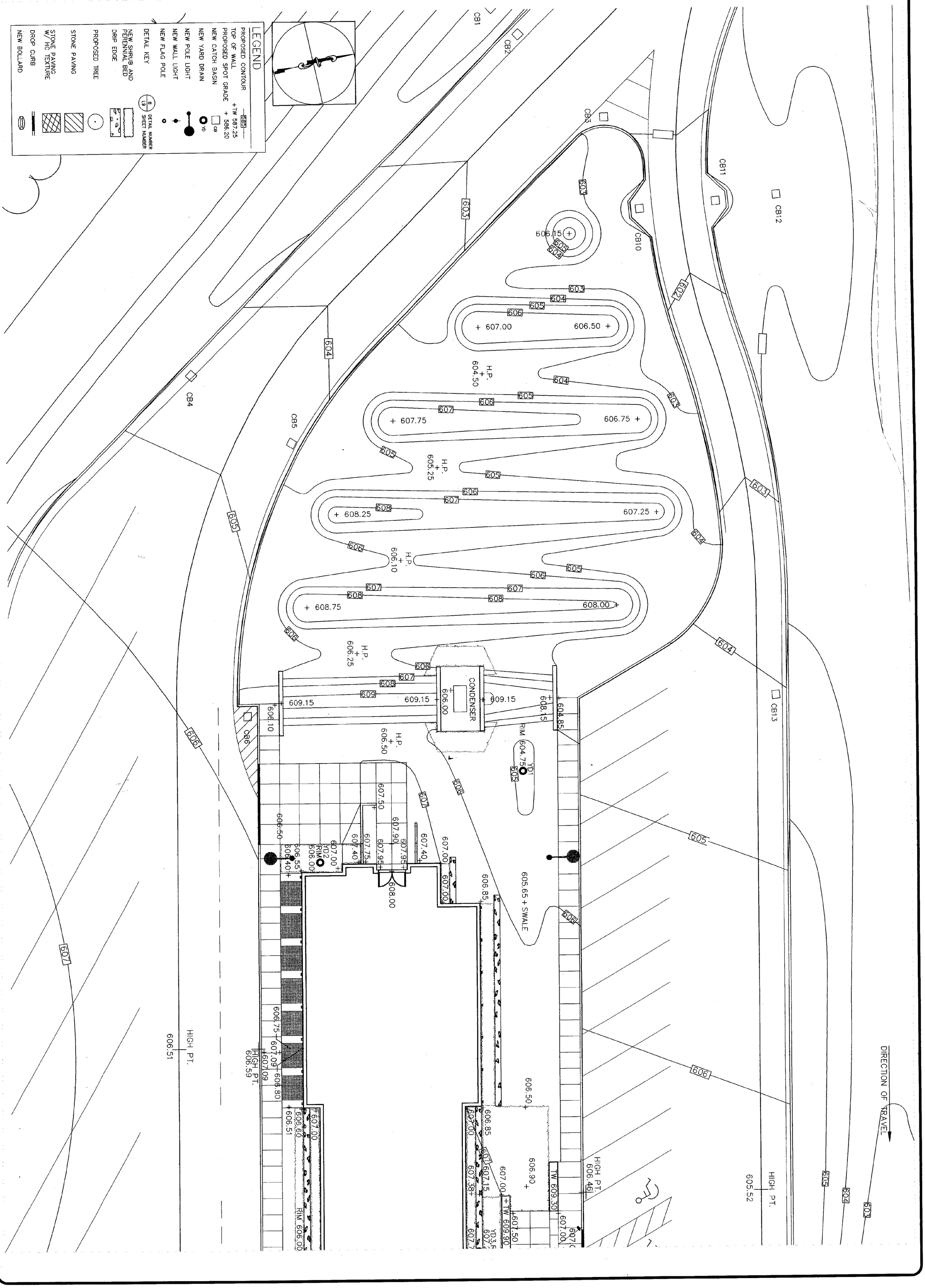

L1sb

1 of 11 SHEETS

DRAWN	AGS
CHECKED	HKW
SCALE	1"=10'
DATE	9-18-2000
JOB NO.	99933
SHEET	

INTERSTATE 89 SOUTHBOUND WILLISTON INFORMATION CENTERS IM-BLDG(4)

LANDSCAPE PLAN: BUILDING SITE GRADING PLAN

WILLISTON VERMONT

OHKW
OFFICE OF H. KEITH WAGNER LANDSCAPE ARCHITECTS
7 Marble Avenue Burlington, VT 05401 T 802.864.0010 F 802.864.0267
159 Clifton Street Cambridge, MA 02138 T 617.441.5960 F 617.354.5371
E ohkw@together.net

CHAMPLAIN CONSULTING ENGINEERS
128 PRIM ROAD, P.O. BOX 453
COLCHESTER, VERMONT 05446
(802) 863-8060
(802) 864-1878 FAX

COPYRIGHT ©2000 OFFICE OF H. KEITH WAGNER ALL RIGHTS RESERVED

REVISIONS	BY
1.16.2001	AGS

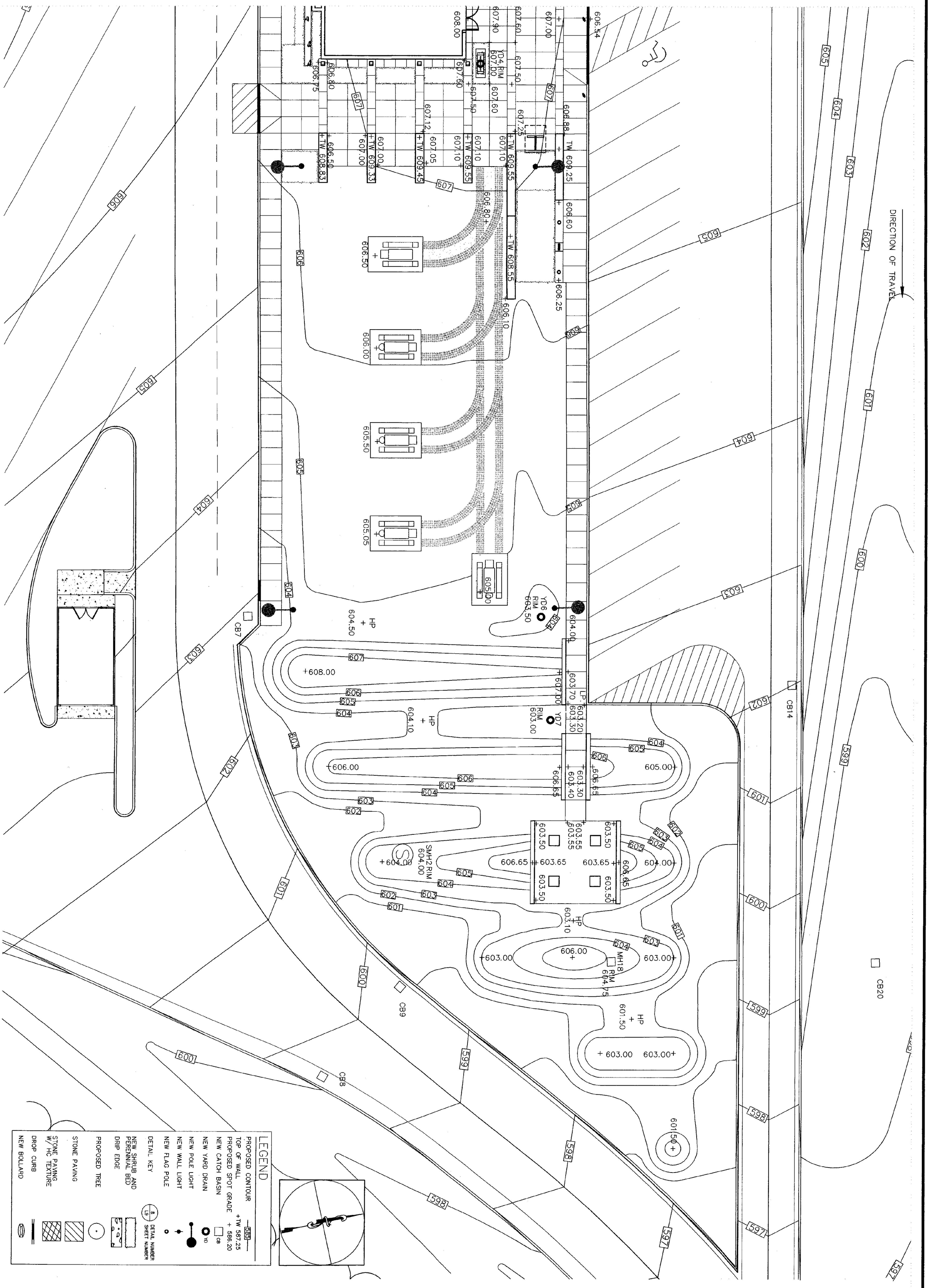

INTERSTATE 89 SOUTHBOUND
WILLISTON INFORMATION CENTERS
IM-BLDG(4)
LANDSCAPE PLAN: BUILDING SITE GRADING PLAN

WILLISTON VERMONT

L2sb

2 OF 11 SHEETS

DRAWN AGS
CHECKED HKW
SCALE 1"=10'
DATE 9-18-2000
JOB NO. 99933
SHEET

OHKW
OFFICE OF H. KEITH WAGNER
LANDSCAPE ARCHITECTS
7 Marble Avenue Burlington, VT 05401 T 802.864.0010 F 802.864.6257
158 Chilton Street Cambridge, MA 02138 T 617.441.5300 F 617.354.5371
E ohkw@together.net

CHAMPLAIN CONSULTING ENGINEERS
128 PRIM ROAD, P.O. BOX 453
COLCHESTER, VERMONT 05446
(802) 863-8060
(802) 864-1878 FAX

COPYRIGHT ©2000
OFFICE OF H. KEITH WAGNER
ALL RIGHTS RESERVED

REVISIONS	BY
1.16.2001	AGS

LEGEND

- PROPOSED CONTOUR — 585
- TOP OF WALL +TW 587.25
- PROPOSED SPOT GRADE + 586.20
- NEW CATCH BASIN CB
- NEW YARD DRAIN YD
- NEW POLE LIGHT
- NEW WALL LIGHT
- NEW FLAG POLE
- DETAIL KEY — DETAIL NUMBER / SHEET NUMBER
- NEW SHRUB AND PERENNIAL BED
- DRIP EDGE
- PROPOSED TREE
- STONE PAVING
- STONE PAVING W/ HC TEXTURE
- DROP CURB
- NEW BOLLARD

SOUTHBOUND
WELCOME CENTER
FF = 608.00

INTERSTATE 89 SOUTHBOUND
WILLISTON INFORMATION CENTERS
IM-BLDG(4)

LANDSCAPE PLAN: BUILDING SITE LAYOUT PLAN

WILLISTON VERMONT

OHKW
OFFICE OF H. KEITH WAGNER
LANDSCAPE ARCHITECTS
7 Marble Avenue Burlington, VT 05401 T 802.864.0010 F 802.864.0367
158 Chilton Street Cambridge, MA 02138 T 617.441.5300 F 617.354.5371
E ohkw@together.net

CHAMPLAIN CONSULTING ENGINEERS
128 PRIM ROAD, P.O. BOX 453
COLCHESTER, VERMONT 05446
(802) 863-8060
(802) 864-1878 FAX

COPYRIGHT ©2000
OFFICE OF H. KEITH WAGNER
ALL RIGHTS RESERVED

REVISIONS	BY
1.16.2001	AGS

DRAWN AGS
CHECKED HKW
SCALE 1"=10'
DATE 9-18-2000
JOB NO. 99933
SHEET L3sb
3 OF 11 SHEETS

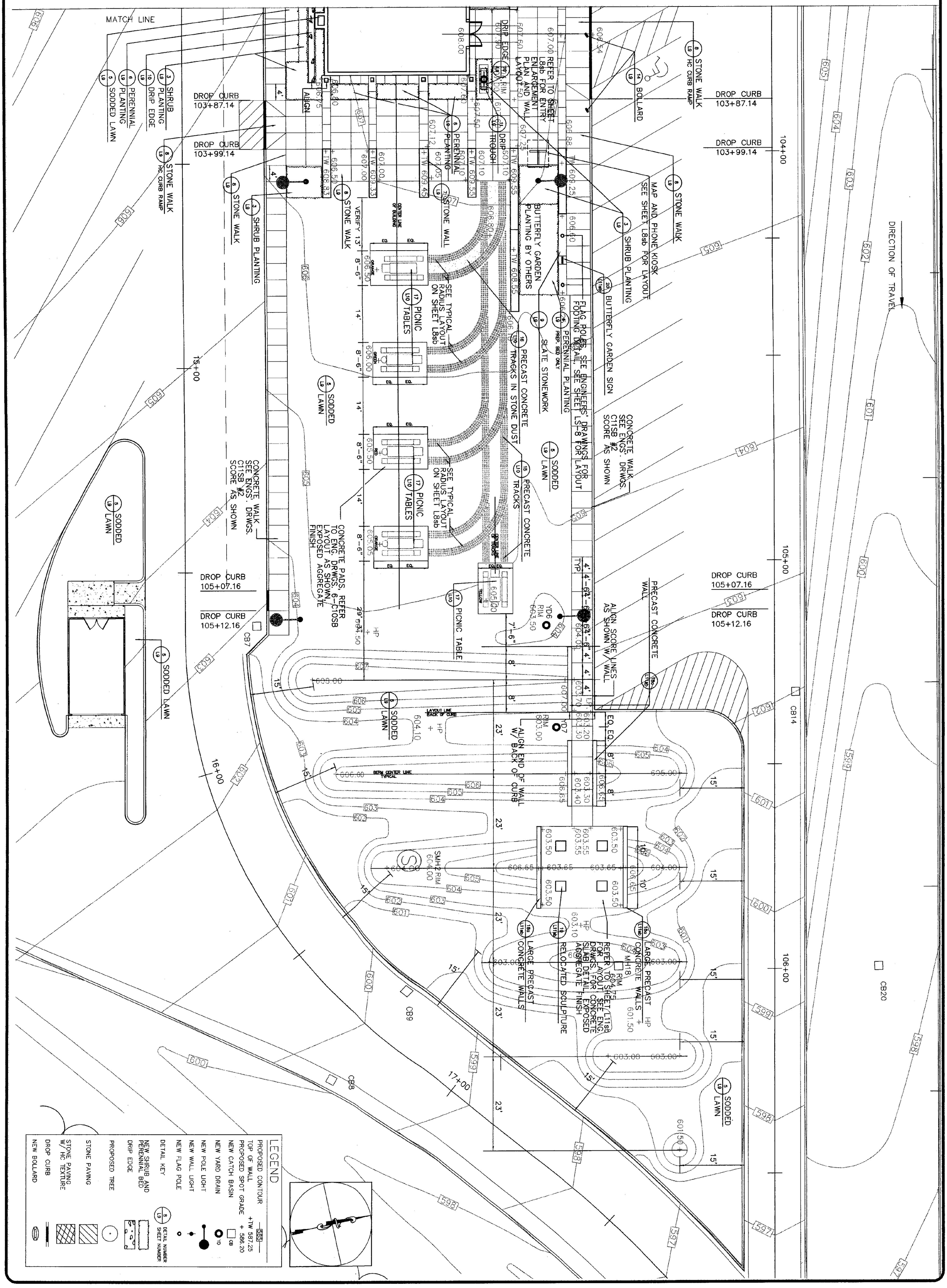

INTERSTATE 89 SOUTHBOUND
WILLISTON INFORMATION CENTERS
IM-BLDG(4)

LANDSCAPE PLAN: BUILDING SITE LAYOUT PLAN

WILLISTON VERMONT

L4sb

4 of 11 SHEETS

DRAWN AGS
CHECKED HKW
SCALE 1"=10'
DATE 9-18-2000
JOB NO. 9933
SHEET

OHKW
OFFICE OF H. KEITH WAGNER
LANDSCAPE ARCHITECTS
7 Marble Avenue Burlington, VT 05401 T 802.864.0010 F 802.864.6267
158 Chilton Street Cambridge, MA 02138 T 617.441.5300 F 617.354.5371
E ohkw@together.net

CHAMPLAIN CONSULTING ENGINEERS
128 PRIM ROAD, P.O. BOX 453
COLCHESTER, VERMONT 05446
(802) 863-8060
(802) 864-1878 FAX

COPYRIGHT ©2000
OFFICE OF H. KEITH WAGNER
ALL RIGHTS RESERVED

REVISIONS	BY
1.16.2001	AGS

GENERAL NOTES

1. All plant material in the plant schedule shall be nursery grown in accordance with ANSI in accordance with Z.60.1 Standards for measurement of nursery stock.
2. All plants shall be guaranteed by the Contractor for a period of one year from date of receipt of Provisional Acceptance of the completed installation by the Owner.
3. Replacement plantings will be required prior to Final Acceptance for any plants which are missing, not true to specifications, have died or are unhealthy or uncharacteristic of the species (due to excessive pruning, dieback or other reasons).
4. All plant materials shall be selected and tagged at the nursery by Landscape Architect.
5. The Landscape Architect's approval is required for any plant material substitutions.
6. If a discrepancy exists in plant quantities between the planting plan and plant list notify the Landscape Architect immediately.
7. All shrubs and trees will be sprayed with the anti-desiccant "Wilt-Pruf" (or approved equal) prior to the first Winter
8. The Landscape Contractor shall have the General Contractor locate all underground utilities in areas to be landscaped prior to commencing any excavation. Adjustments to tree locations will be allowed where utility conflicts are clearly a problem and with prior site approval by Landscape Architect.
9. All plant bed, shrub and tree location shall be staked in the field by Contractor for Landscape Architects approval prior to installation.
10. Adjustments to plant beds shall be approved by Landscape Architect.
11. General Contractor is responsible for all erosion control measures during construction.
12. Mulch shall consist of double-shredded hardwood mulch or approved equal and Contractor is responsible for providing samples of mulch to Landscape Architect. Mulch plant materials as shown on plan and details.
13. It is the intent of this contract to avoid any disturbance to existing trees or shrubs on site other than those specifically designated for transplant or demolition.
14. Liquidated damages for trees damaged by construction operation shall be $500 per caliper inch. Shrubs shall be $100 each.
15. Contractor is responsible for all damage due to his operations inside and outside the contract limit line.
16. Contractor is responsible for checking spot elevations and verifying proposed grades by providing grade stakes. Grades must be approved by landscape Architect prior to proceeding.
17. Contractor shall blend new work smoothly with existing grades at contract limit line and/or limit of construction line.
18. Contractor to verify that subgrades are 4 inches below finished grade prior to spreading top soil for seeded areas.
19. General Contractor shall coordinate ledge removal requirements for landscaping with general site ledge removal operations. Refer to Engineer's Document C4SB Note #1.

PLANT LIST FOR SHEETS L5sb, L6sb, & L7sb

SYM	QTY	SCIENTIFIC NAME	COMMON NAME	SIZE	COND.
AS	1	Acer saccharum 'Green Mountain'	GREEN MOUNTAIN SUGAR MAPLE	8" CAL.	B&B
Ba	17	Betula alba	WHITE BIRCH – Clump Form	16'–18' HGT.	B&B
BA	5	Betula alba	WHITE BIRCH – Clump Form	22'–24' HGT.	B&B
BD	24	Buddleia davidii	BUTTERFLY BUSH	30"–36" HGT.	B&B
FP	20	Fraxinus pennsylvanica 'Patmore'	PATMORE ASH	4 1/2"–5" CAL.	B&B
HF	45	Hosta fortunei var. albopicta	ALBOPICTA HOSTA	2 YR. OLD	1 GAL.
GT	1	Gleditsia tricanthos inermis	THORNLESS HONEY LOCUST	5" CAL.	B&B
JC	21	Juniperus chiriensis var. sargentii	SARGENT JUNIPER	18" SPREAD	1 GAL.
MF	31	Malus floribunda	JAPANESE FLOWERING CRABAPPLE	3 1/2"–4" CAL.	B&B
ME	12	Malus 'Empire'	EMPIRE APPLE (Local Source)	6" CAL.	B&B
MM	15	Malus 'MacIntosh'	MACINTOSH APPLE (Local Source)	6" CAL.	B&B
NS	13	Nyssa sylvatica	SOUR GUM	3"–3 1/2" CAL.	B&B
PA	1500	pachysandra terminalis	PACHYSANDRA	1 YR. OLD	FLAT
PE	20	Pennisetum alopecuroides	FOUNTAIN GRASS		2 GAL.
PJM	37	Rhododendron 'PJM'	PJM RHODODENDRON	24"–30" HGT.	B&B
PG	9	Picea glauca	WHITE SPRUCE	12' HGT.	B&B
PS	8	Pinus strobus	WHITE PINE	12' HGT.	B&B
PV	7	Panicum virgantum	RED SWITCH GRASS		2 GAL.
RR	340	Rosa rugosa	RUGOSA ROSE	24"–30" HGT.	B&B
SB	24	Spirea x bumalda 'Anthony Waterer'	ANTHONY WATERER SPIREA	18"–24" HGT.	B&B
SO	53	Salvia officinalis	COMMON SAGE	2 YR. OLD	1 GAL.
VT	35	Viburnum trilobum 'Compacta'	COMPACT AMERICAN CRANBERRY	2'–3' HGT.	B&B

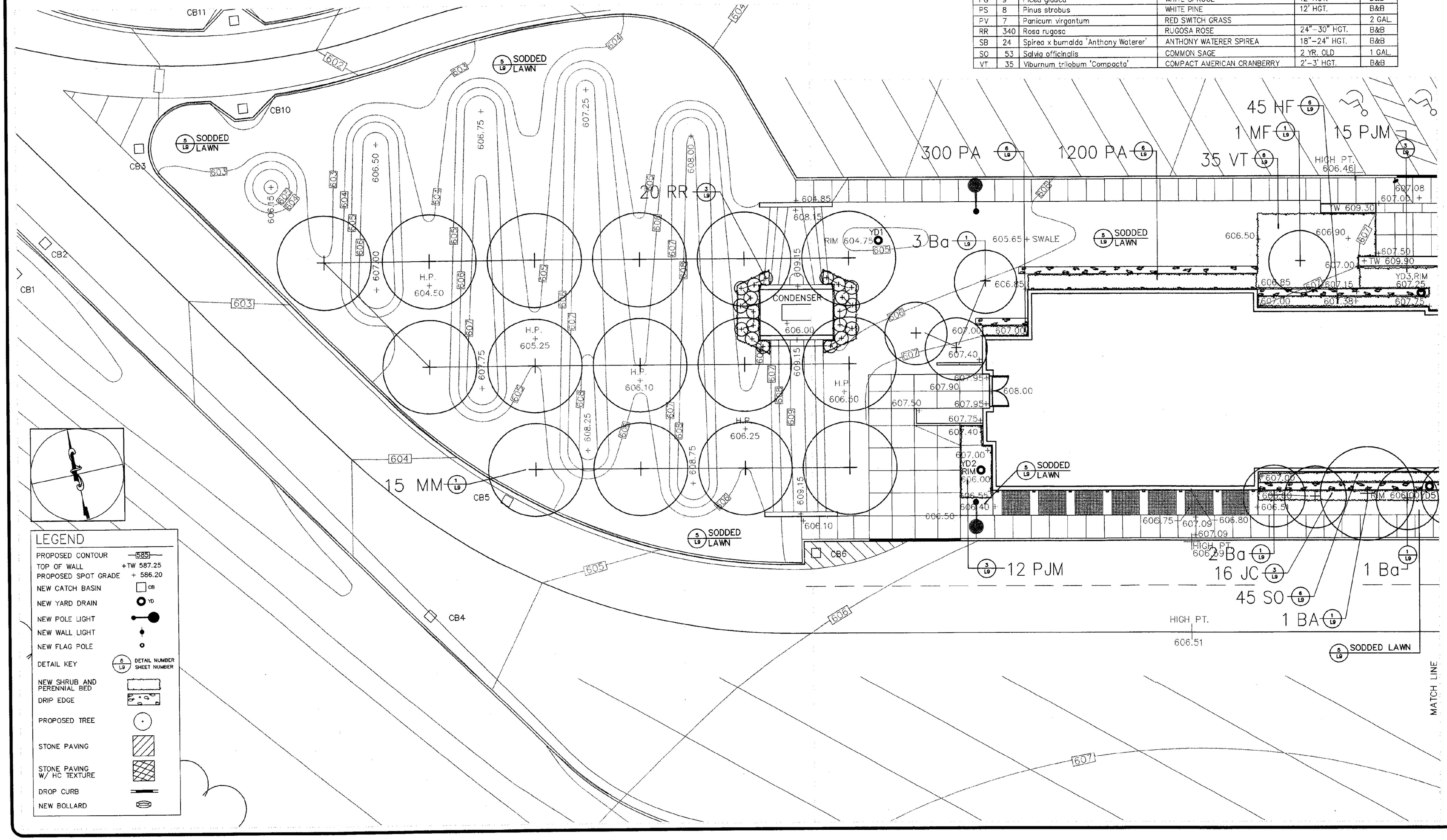

LEGEND

PROPOSED CONTOUR	585
TOP OF WALL	+TW 587.25
PROPOSED SPOT GRADE	+ 586.20
NEW CATCH BASIN	CB
NEW YARD DRAIN	YD
NEW POLE LIGHT	
NEW WALL LIGHT	
NEW FLAG POLE	
DETAIL KEY	6 / L9 DETAIL NUMBER SHEET NUMBER
NEW SHRUB AND PERENNIAL BED	
DRIP EDGE	
PROPOSED TREE	
STONE PAVING	
STONE PAVING W/ HC TEXTURE	
DROP CURB	
NEW BOLLARD	

REVISIONS	BY
1.16.2001	AGS

COPYRIGHT ©2000
OFFICE OF H. KEITH WAGNER
ALL RIGHTS RESERVED

CHAMPLAIN CONSULTING ENGINEERS
128 PRIM ROAD, P.O. BOX 453
COLCHESTER, VERMONT 05446
(802) 863-8060
(802) 864-1878 FAX

OHKW
OFFICE OF H. KEITH WAGNER
LANDSCAPE ARCHITECTS
7 Valley Manor Building, Suite 2, Burlington, VT 05408 T 802.864.5500 F 802.864.5507
136 Main Street Montpelier, VT 05602 T 802.223.5500 F 802.223.5507
e-mail: ohkw@aol.com

INTERSTATE 89 SOUTHBOUND
WILLISTON INFORMATION CENTERS
IM-BLDG(4)
LANDSCAPE PLAN: BUILDING SITE
PLANTING PLAN
WILLISTON VERMONT

DRAWN	AGS
CHECKED	HKW
SCALE	1"=10'
DATE	9-18-2000
JOB NO.	99933
SHEET	L5sb

5 OF 11 SHEETS

PLANT LIST FOR SHEETS L5sb, L6sb, & L7sb

SYM	QTY	SCIENTIFIC NAME	COMMON NAME	SIZE	COND.
AS	1	Acer saccharum 'Green Mountain'	GREEN MOUNTAIN SUGAR MAPLE	8" CAL.	B&B
Ba	17	Betula alba	WHITE BIRCH – Clump Form	16'–18' HGT.	B&B
BA	5	Betula alba	WHITE BIRCH – Clump Form	22'–24' HGT.	B&B
BD	24	Buddleia davidii	BUTTERFLY BUSH	30"–36" HGT.	B&B
FP	20	Fraxinus pennsylvanica 'Patmore'	PATMORE ASH	4 1/2"–5" CAL.	B&B
HF	45	Hosta forturei var. albopicta	ALBOPICTA HOSTA	2 YR. OLD	1 GAL.
GT	1	Gleditsia tricanthos inermis	THORNLESS HONEY LOCUST	5" CAL.	B&B
JC	21	Juniperus chinensis var. sargentii	SARGENT JUNIPER	18" SPREAD	1 GAL.
MF	31	Malus floribunda	JAPANESE FLOWERING CRABAPPLE	3 1/2"–4" CAL.	B&B
ME	12	Malus 'Empire'	EMPIRE APPLE (Local Source)	6" CAL.	B&B
MM	15	Malus 'MacIntosh'	MACINTOSH APPLE (Local Source)	6" CAL.	B&B
NS	13	Nyssa sylvatica	SOUR GUM	3"–3 1/2" CAL.	B&B
PA	1500	pachysandra terminalis	PACHYSANDRA	1 YR. OLD	FLAT
PE	20	Pennisetum alopecioides	FOUNTAIN GRASS		2 GAL.
PJM	37	Rhododendron 'PJM'	PJM RHODODENDRON	24"–30" HGT.	B&B
PG	9	Picea glauca	WHITE SPRUCE	12' HGT.	B&B
PS	8	Pinus strobus	WHITE PINE	12' HGT.	B&B
PV	7	Panicum virgantum	RED SWITCH GRASS		2 GAL.
RR	340	Rosa rugosa	RUGOSA ROSE	24"–30" HGT.	B&B
SB	24	Spirea x burnalda 'Anthony Waterer'	ANTHONY WATERER SPIREA	18"–24" HGT.	B&B
SO	53	Salvia officinalis	COMMON SAGE	2 YR. OLD	1 GAL.
VT	35	Viburnum trilobum 'Compacta'	COMPACT AMERICAN CRANBERRY	2'–3' HGT.	B&B

GENERAL NOTES

1. All plant material in the plant schedule shall be nursery grown in accordance with ANSI in accordance with Z.60.1 Standards for measurement of nursery stock.
2. All plants shall be guaranteed by the Contractor for a period of one year from date of receipt of Provisional Acceptance of the completed installation by the Owner.
3. Replacement plantings will be required prior to Final Acceptance for any plants which are missing, not true to specifications, have died or are unhealthy or uncharacteristic of the species (due to excessive pruning, dieback or other reasons).
4. All plant materials shall be selected and tagged at the nursery by Landscape Architect.
5. The Landscape Architect's approval is required for any plant material substitutions.
6. If a discrepancy exists in plant quantities between the planting plan and plant list notify the Landscape Architect immediately.
7. All shrubs and trees will be sprayed with the anti-desiccant "Wilt-Pruf" (or approved equal) prior to the first Winter
8. The Landscape Contractor shall have the General Contractor locate all underground utilities in areas to be landscaped prior to commencing any excavation. Adjustments to tree locations will be allowed where utility conflicts are clearly a problem and with prior site approval by Landscape Architect.
9. All plant bed, shrub and tree location shall be staked in the field by Contractor for Landscape Architects approval prior to installation.
10. Adjustments to plant beds shall be approved by Landscape Architect.
11. General Contractor is responsible for all erosion control measures during construction.
12. Mulch shall consist of double–shredded hardwood mulch or approved equal and Contractor is responsible for providing samples of mulch to Landscape Architect. Mulch plant materials as shown on plan and details.
13. It is the intent of this contract to avoid any disturbance to existing trees or shrubs on site other than those specifically designated for transplant or demolition.
14. Liquidated damages for trees damaged by construction operation shall be $500 per caliper inch. Shrubs shall be $100 each.
15. Contractor is responsible for all damage due to his operations inside and outside the contract limit line.
16. Contractor is responsible for checking spot elevations and verifying proposed grades by providing grade stakes. Grades must be approved by landscape Architect prior to proceeding.
17. Contractor shall blend new work smoothly with existing grades at contract limit line and/or limit of construction line.
18. Contractor to verify that subgrades are 4 inches below finished grade prior to spreading top soil for seeded areas.
19. General Contractor shall coordinate ledge removal requirements for landscaping with general site ledge removal operations. Refer to Engineer's Document C4SB Note #1.

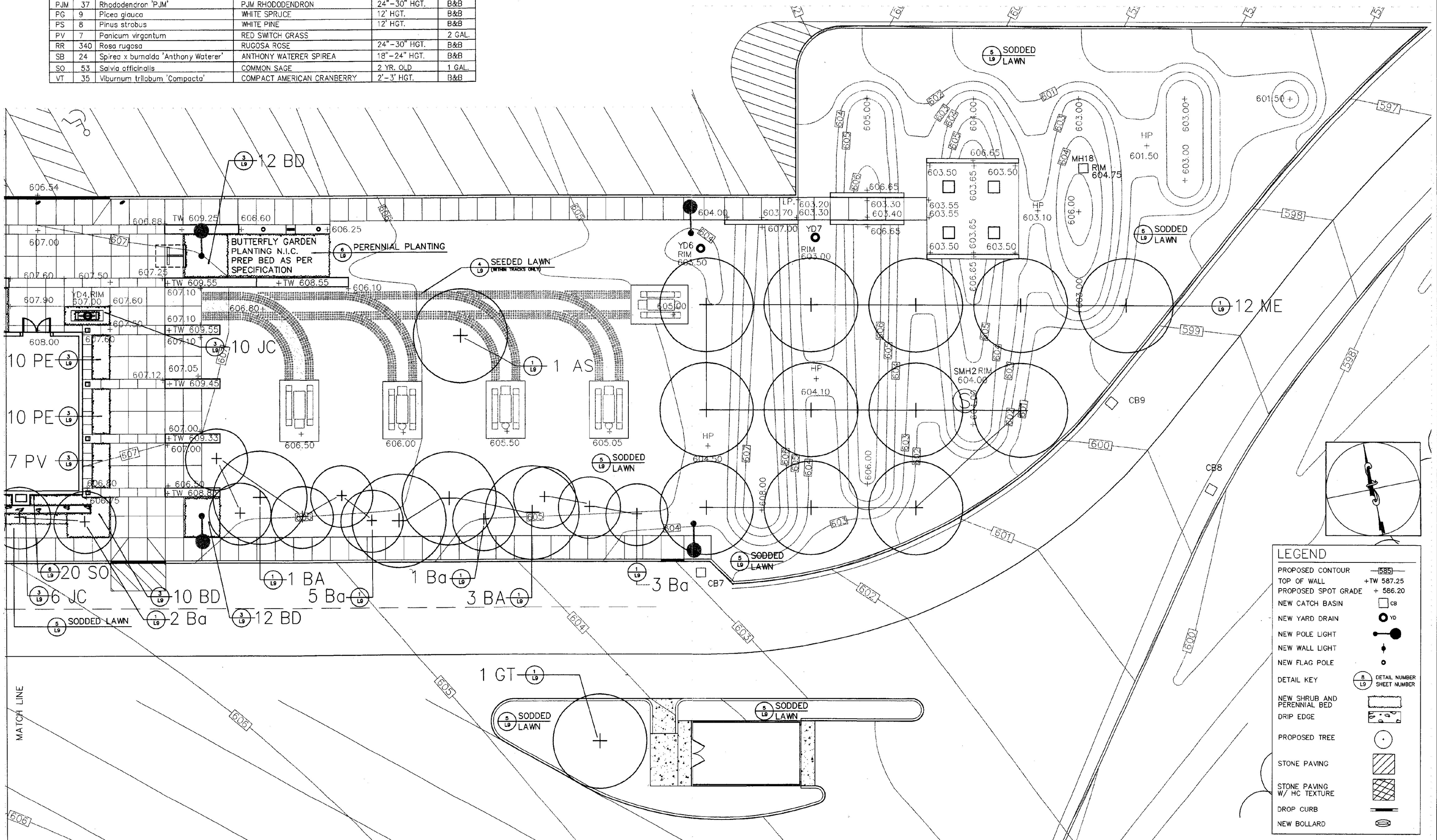

LEGEND

PROPOSED CONTOUR	585
TOP OF WALL	+TW 587.25
PROPOSED SPOT GRADE	+ 586.20
NEW CATCH BASIN	CB
NEW YARD DRAIN	YD
NEW POLE LIGHT	
NEW WALL LIGHT	
NEW FLAG POLE	
DETAIL KEY	5 / L9 DETAIL NUMBER / SHEET NUMBER
NEW SHRUB AND PERENNIAL BED	
DRIP EDGE	
PROPOSED TREE	
STONE PAVING	
STONE PAVING W/ HC TEXTURE	
DROP CURB	
NEW BOLLARD	

REVISIONS	BY
1.16.2001	AGS

COPYRIGHT ©2000
OFFICE OF H. KEITH WAGNER
ALL RIGHTS RESERVED

CHAMPLAIN CONSULTING ENGINEERS
128 PRIM ROAD, P.O. BOX 453
COLCHESTER, VERMONT 05446
(802) 863–8060
(802) 864–1878 FAX

OHKW
OFFICE OF H. KEITH WAGNER
LANDSCAPE ARCHITECTS

INTERSTATE 89 SOUTHBOUND
WILLISTON INFORMATION CENTERS
IM–BLDG(4)
LANDSCAPE PLAN: BUILDING SITE
PLANTING PLAN
WILLISTON VERMONT

DRAWN	AGS
CHECKED	HKW
SCALE	1"=10'
DATE	9–18–2000
JOB NO.	9933
SHEET	L6sb

6 OF 11 SHEETS

PLANT LIST FOR SHEETS L5sb, L6sb, & L7sb

SYM	QTY	SCIENTIFIC NAME	COMMON NAME	SIZE	COND.
AS	1	Acer saccharum 'Green Mountain'	GREEN MOUNTAIN SUGAR MAPLE	8" CAL.	B&B
Ba	17	Betula alba	WHITE BIRCH – Clump Form	16'–18' HGT.	B&B
BA	5	Betula alba	WHITE BIRCH – Clump Form	22'–24' HGT.	B&B
BD	24	Buddleia davidii	BUTTERFLY BUSH	30"–36" HGT.	B&B
FP	20	Fraxinus pennsylvanica 'Patmore'	PATMORE ASH	4 1/2"–5" CAL.	B&B
HF	45	Hosta fortunei var. albopicta	ALBOPICTA HOSTA	2 YR. OLD	1 GAL.
GT	1	Gleditsia tricanthos inermis	THORNLESS HONEY LOCUST	5" CAL.	B&B
JC	21	Juniperus chinensis var. sargentii	SARGENT JUNIPER	18" SPREAD	1 GAL.
MF	31	Malus floribunda	JAPANESE FLOWERING CRABAPPLE	3 1/2"–4" CAL.	B&B
ME	12	Malus 'Empire'	EMPIRE APPLE (Local Source)	6" CAL.	B&B
MM	15	Malus 'MacIntosh'	MACINTOSH APPLE (Local Source)	6" CAL.	B&B
NS	13	Nyssa sylvatica	SOUR GUM	3"–3 1/2" CAL.	B&B
PA	1500	pachysandra terminalis	PACHYSANDRA	1 YR. OLD	FLAT
PE	20	Pennisetum alopecuroides	FOUNTAIN GRASS		2 GAL.
PJM	37	Rhododendron 'PJM'	PJM RHODODENDRON	24"–30" HGT.	B&B
PG	9	Picea glauca	WHITE SPRUCE	12' HGT.	B&B
PS	8	Pinus strobus	WHITE PINE	12' HGT.	B&B
PV	7	Panicum virgantum	RED SWITCH GRASS		2 GAL.
RR	340	Rosa rugosa	RUGOSA ROSE	24"–30" HGT.	B&B
SB	24	Spirea x bumalda 'Anthony Waterer'	ANTHONY WATERER SPIREA	18"–24" HGT.	B&B
SO	53	Salvia officinalis	COMMON SAGE	2 YR. OLD	1 GAL.
VT	35	Viburnum trilobum 'Compacto'	COMPACT AMERICAN CRANBERRY	2'–3' HGT.	B&B

GENERAL NOTES

1. All plant material in the plant schedule shall be nursery grown in accordance with ANSI in accordance with Z.60.1 Standards for measurement of nursery stock.
2. All plants shall be guaranteed by the Contractor for a period of one year from date of receipt of Provisional Acceptance of the completed installation by the Owner.
3. Replacement plantings will be required prior to Final Acceptance for any plants which are missing, not true to specifications, have died or are unhealthy or uncharacteristic of the species (due to excessive pruning, dieback or other reasons).
4. All plant materials shall be selected and tagged at the nursery by Landscape Architect.
5. The Landscape Architect's approval is required for any plant material substitutions.
6. If a discrepancy exists in plant quantities between the planting plan and plant list notify the Landscape Architect immediately.
7. All shrubs and trees will be sprayed with the anti-desiccant "Wilt-Pruf" (or approved equal) prior to the first Winter
8. The Landscape Contractor shall have the General Contractor locate all underground utilities in areas to be landscaped prior to commencing any excavation. Adjustments to tree locations will be allowed where utility conflicts are clearly a problem and with prior site approval by Landscape Architect.
9. All plant bed, shrub and tree location shall be staked in the field by Contractor for Landscape Architects approval prior to installation.
10. Adjustments to plant beds shall be approved by Landscape Architect.
11. General Contractor is responsible for all erosion control measures during construction.
12. Mulch shall consist of double-shredded hardwood mulch or approved equal and Contractor is responsible for providing samples of mulch to Landscape Architect. Mulch plant materials as shown on plan and details.
13. It is the intent of this contract to avoid any disturbance to existing trees or shrubs on site other than those specifically designated for transplant or demolition.
14. Liquidated damages for trees damaged by construction operation shall be $500 per caliper inch. Shrubs shall be $100 each.
15. Contractor is responsible for all damage due to his operations inside and outside the contract limit line.
16. Contractor is responsible for checking spot elevations and verifying proposed grades by providing grade stakes. Grades must be approved by landscape Architect prior to proceeding.
17. Contractor shall blend new work smoothly with existing grades at contract limit line and/or limit of construction line.
18. Contractor to verify that subgrades are 4 inches below finished grade prior to spreading top soil for seeded areas.
19. General Contractor shall coordinate ledge removal requirements for landscaping with general site ledge removal operations. Refer to Engineer's Document C4SB Note #1.

LEGEND

- PROPOSED CONTOUR — 585
- TOP OF WALL +TW 587.25
- PROPOSED SPOT GRADE + 586.20
- NEW CATCH BASIN CB
- NEW YARD DRAIN YD
- NEW POLE LIGHT
- NEW WALL LIGHT
- NEW FLAG POLE
- DETAIL KEY — 8 / L9 — DETAIL NUMBER / SHEET NUMBER
- NEW SHRUB AND PERENNIAL BED
- DRIP EDGE
- PROPOSED TREE
- STONE PAVING
- STONE PAVING W/ HC TEXTURE
- DROP CURB
- NEW BOLLARD

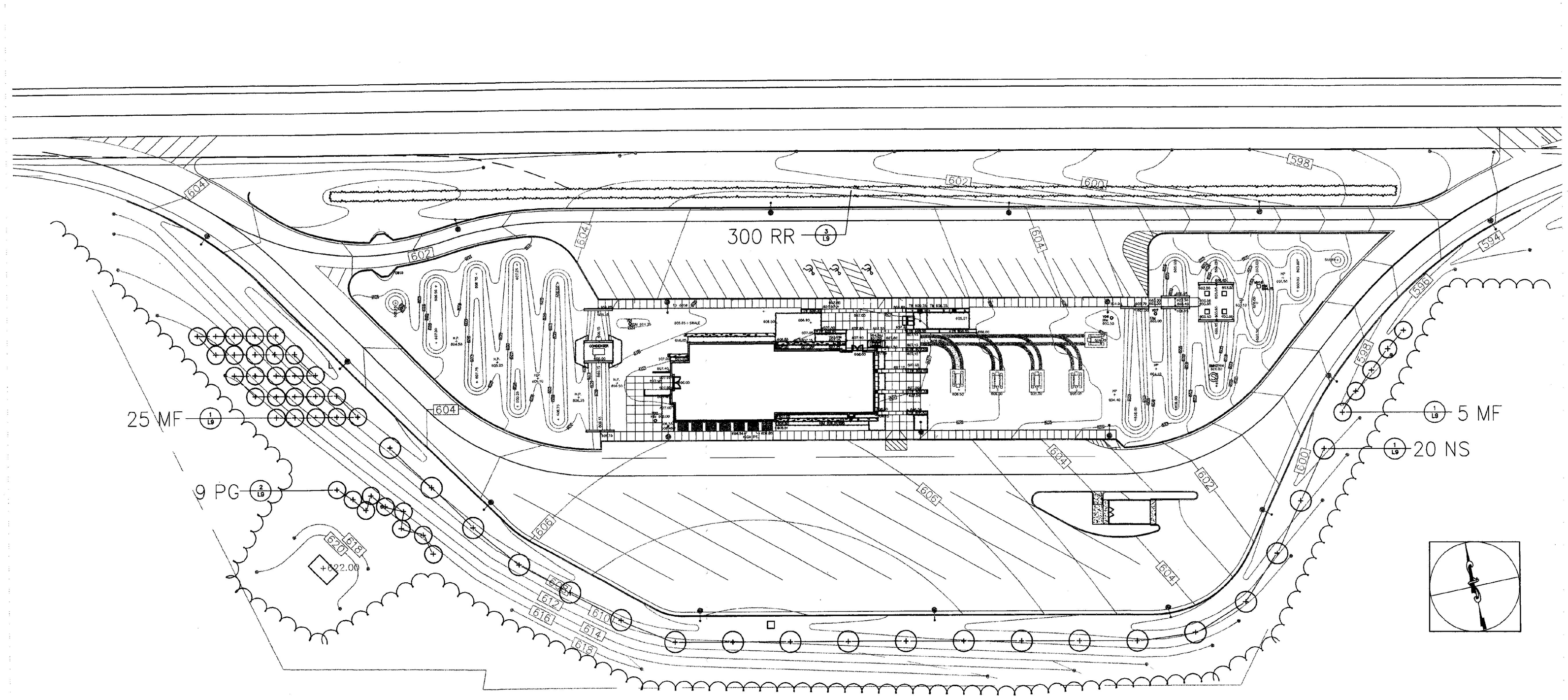

COPYRIGHT ©2000
OFFICE OF H. KEITH WAGNER
ALL RIGHTS RESERVED

REVISIONS	BY
1.16.2001	AGS

CHAMPLAIN CONSULTING ENGINEERS
128 PRIM ROAD, P.O. HOX 453
COLCHESTER, VERMONT 05446
(802) 863-8660
(802) 864-1979 FAX

OHKW
OFFICE OF H. KEITH WAGNER
LANDSCAPE ARCHITECTS

INTERSTATE 89 SOUTHBOUND
WILLISTON INFORMATION CENTERS
IM-BLDG(4)
LANDSCAPE PLAN: BUILDING SITE
PLANTING PLAN
WILLISTON VERMONT

DRAWN	AGS
CHECKED	HKW
SCALE	1"=30'
DATE	9-18-2000
JOB NO.	99933
SHEET	L7sb

7 of 11 SHEETS

REVISIONS	BY
1.16.2001	AGS

COPYRIGHT ©2000
OFFICE OF H. KEITH WAGNER
ALL RIGHTS RESERVED

CHAMPLAIN CONSULTING ENGINEERS
128 PRIM ROAD, P.O. BOX 453
COLCHESTER, VERMONT 05446
(802) 863-8060
(802) 864-1878 FAX

OHKW
OFFICE OF H. KEITH WAGNER
LANDSCAPE ARCHITECTS

INTERSTATE 89 SOUTHBOUND
WILLISTON INFORMATION CENTERS
IM-BLDG(4)
LANDSCAPE PLAN: BUILDING SITE
ENLARGMENT PLAN

WILLISTON VERMONT

DRAWN	AGS
CHECKED	HKW
SCALE	1/4"= 1'
DATE	9-18-2000
JOB NO.	99933
SHEET	L8sb

8 of 11 SHEETS

14 L9 BOLLARD
MAP AND PHONE KIOSK
SEE ARCHITECT DRAWINGS
CONCRETE WALK SEE ENGINEERS DRAWINGS C11SB #2 SCORE AS SHOWN
20 L11 BUTTERFLY GARDEN SIGN
FLAG POLES, SEE ENGINEERS' DRAWINGS FOR FOOTING DETAIL
9 L9 SLATE STONEWORK
7 L9 STONE WALL
10 L9 DRIP EDGE
11 L9 DRIP TROUGH
6 L9 PERENNIAL PLANTING
8 L9 STONE WALK
15 L10 PRECAST CONCRETE TRACKS
16 L10 PRECAST CONCRETE TRACKS IN STONE DUST
16 L10 ACCESSIBLE PICNIC TABLE
17 L10 PICNIC TABLE
BUTTERFLY GARDEN PLANTING BY OTHERS
BLUESTONE PAVING
GRANITE BANDS
HANDICAP ACCESSIBLE
TYPICAL RADIUS LAYOUT
CENTER LINE OF BUILDING
CENTER LINE OF DOORS
CENTER LINE OF WALL
KIOSK CENTER LINE
TRACKS CENTER LINE
COLUMN CENTER LINE
WALL AND BAND CENTERED ON COLUMN TYP.
ALIGN
RIM 606.00 YD5
YD3,RIM 607.25
YD4,RIM 607.00

LEGEND

PROPOSED CONTOUR	585
TOP OF WALL	+TW 587.25
PROPOSED SPOT GRADE	+ 586.20
NEW CATCH BASIN	CB
NEW YARD DRAIN	YD
NEW POLE LIGHT	
NEW WALL LIGHT	
NEW FLAG POLE	
DETAIL KEY	6 L9 DETAIL NUMBER SHEET NUMBER
NEW SHRUB AND PERENNIAL BED	
DRIP EDGE	
PROPOSED TREE	
STONE PAVING	
STONE PAVING W/ HC TEXTURE	
DROP CURB	
NEW BOLLARD	

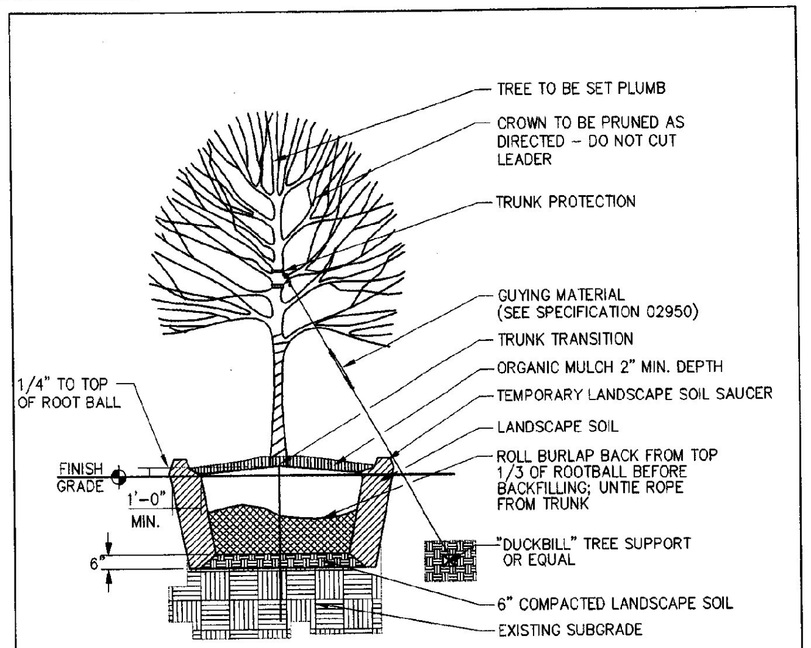

1 L9 DECIDUOUS TREE PLANTING
NTS

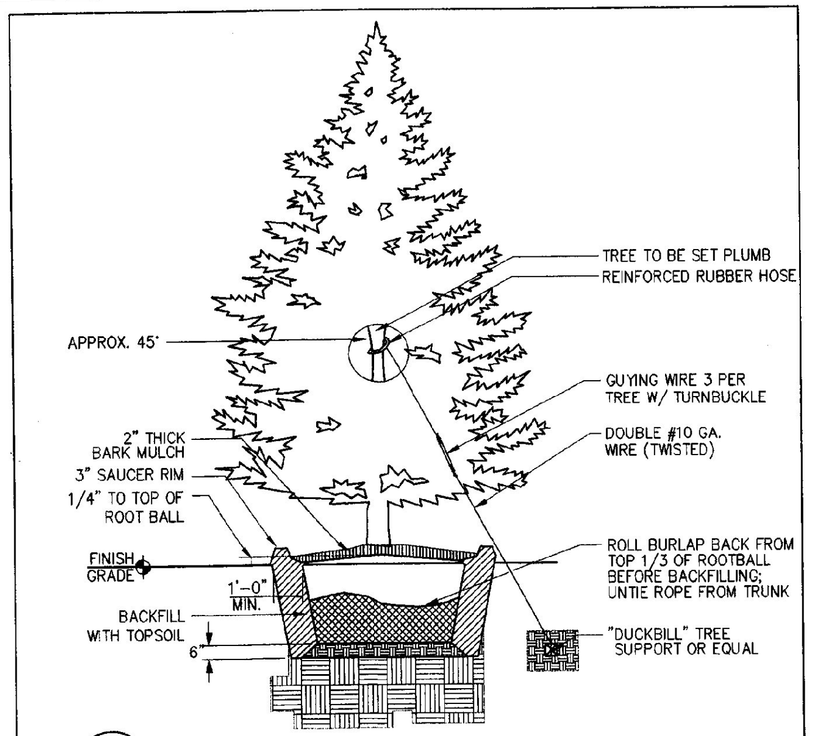

2 L9 EVERGREEN TREE PLANTING DETAIL
NTS

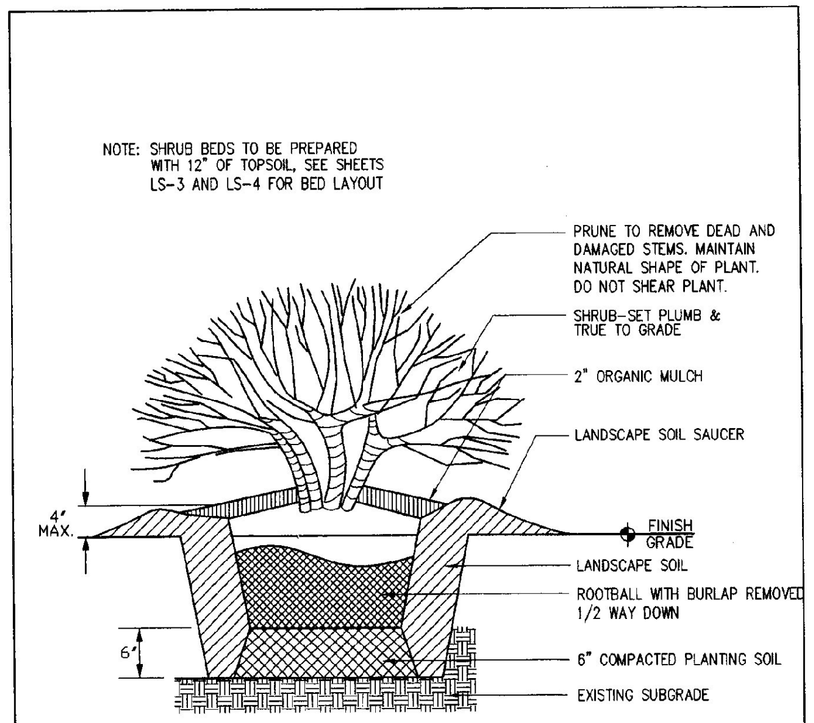

3 L9 SHRUB PLANTING DETAIL
NTS

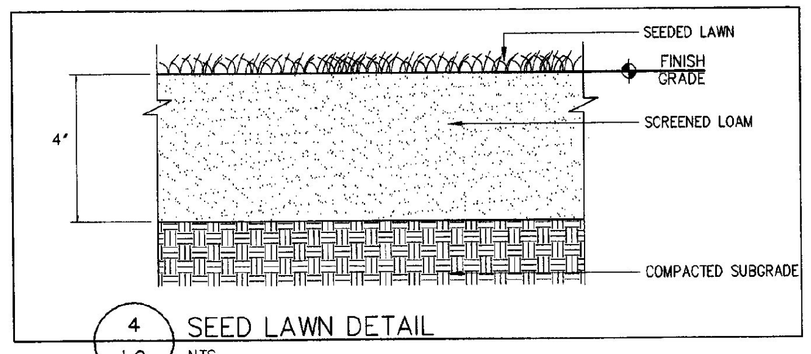

4 L9 SEED LAWN DETAIL
NTS

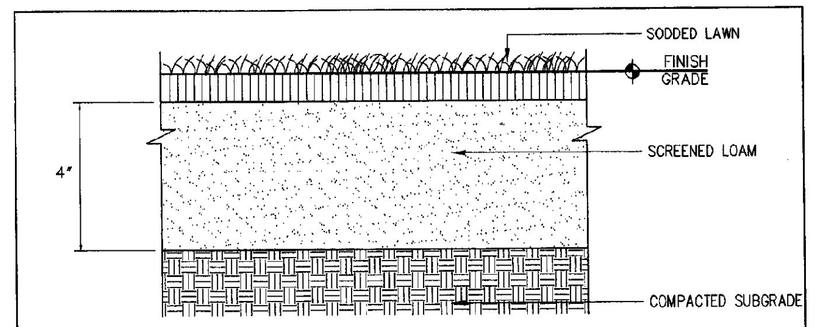

5 L9 SOD LAWN DETAIL
NTS

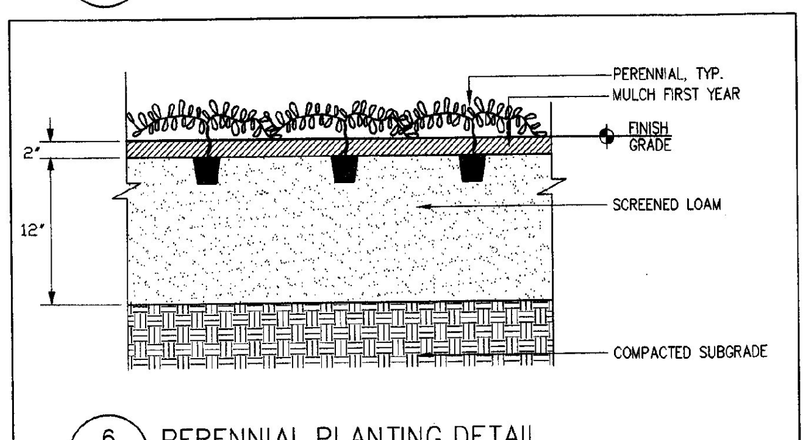

6 L9 PERENNIAL PLANTING DETAIL
NTS

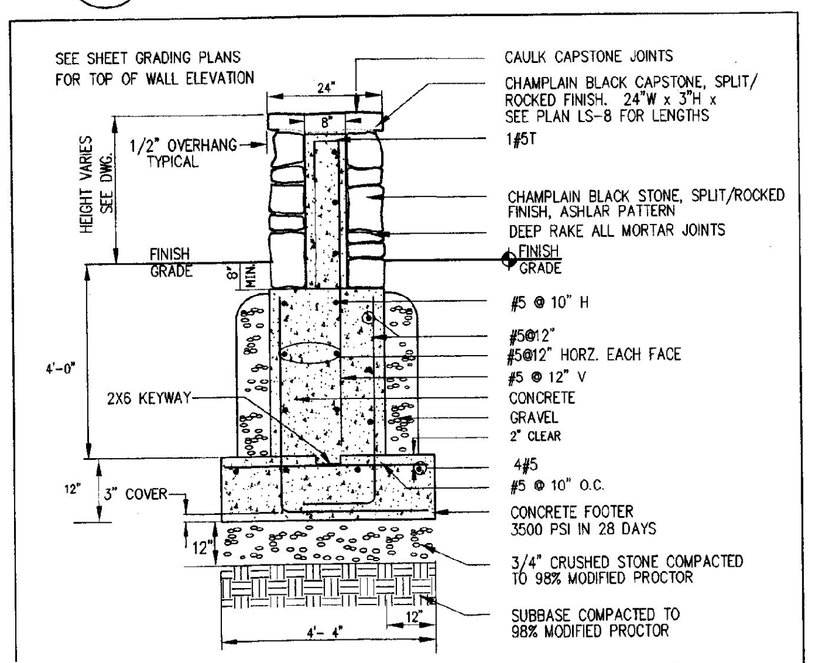

7 L9 STONE WALL DETAIL
NTS

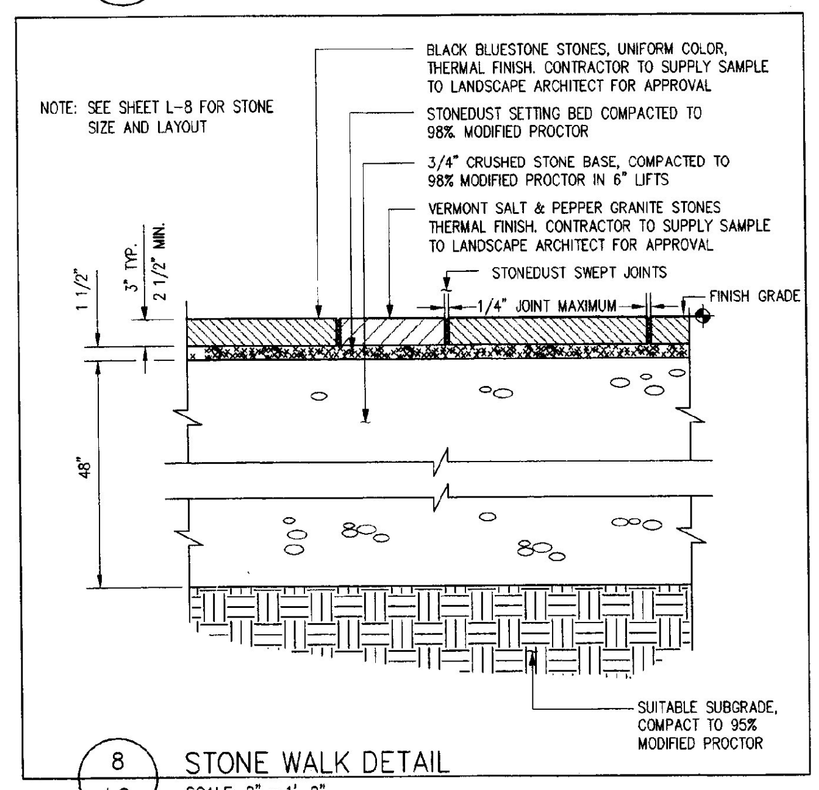

8 L9 STONE WALK DETAIL
SCALE: 2" = 1'-0"

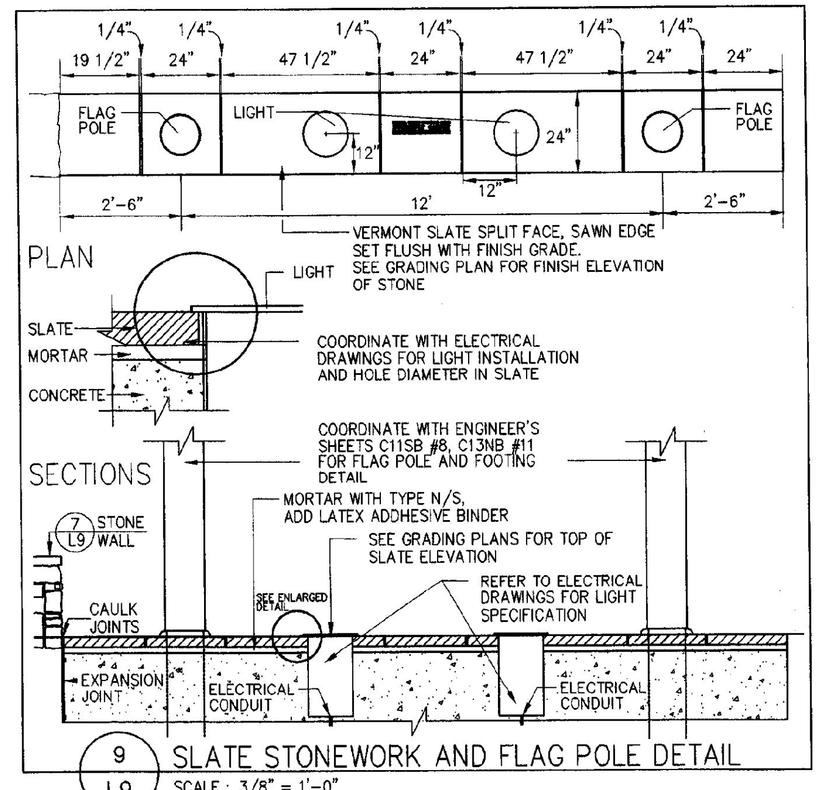

9 L9 SLATE STONEWORK AND FLAG POLE DETAIL
SCALE: 3/8" = 1'-0"

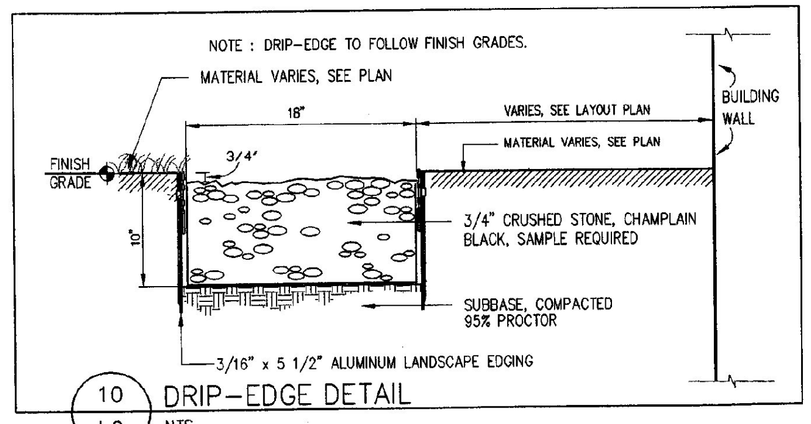

10 L9 DRIP-EDGE DETAIL
NTS

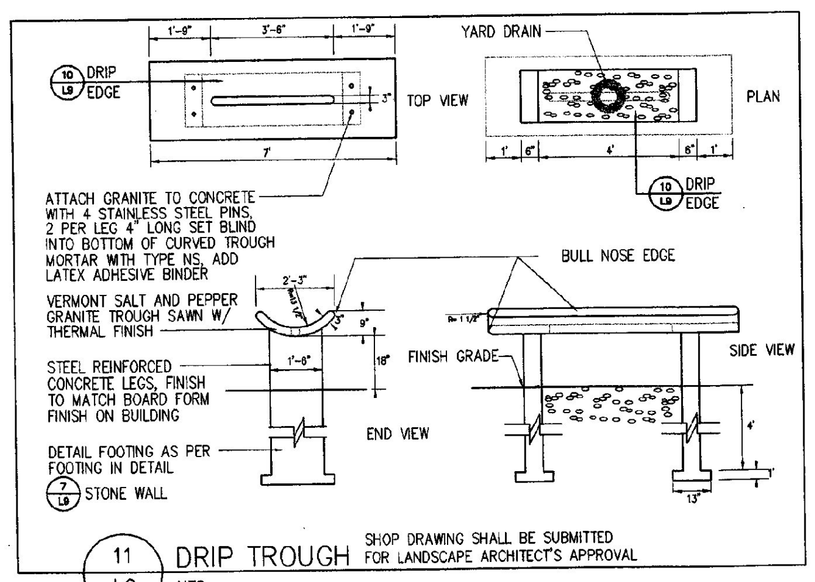

11 L9 DRIP TROUGH
NTS
SHOP DRAWING SHALL BE SUBMITTED FOR LANDSCAPE ARCHITECT'S APPROVAL

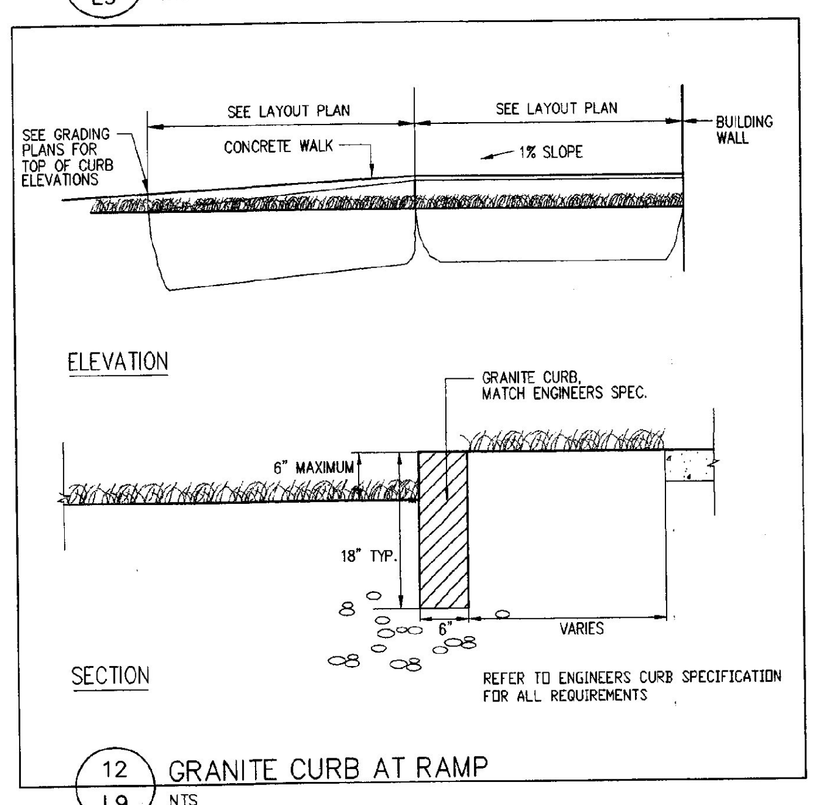

12 L9 GRANITE CURB AT RAMP
NTS

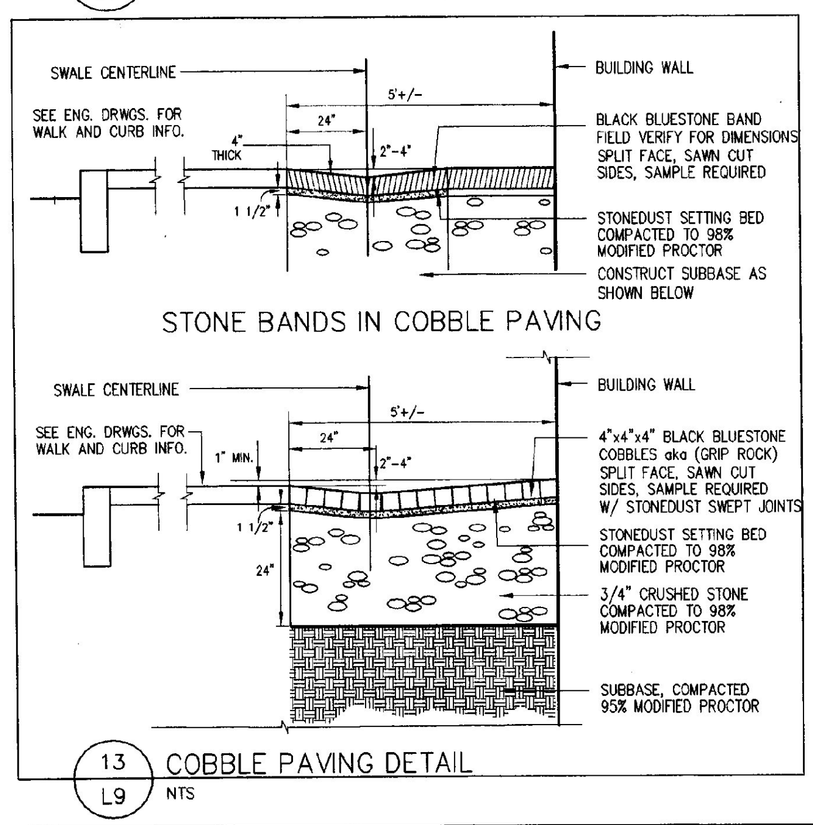

13 L9 COBBLE PAVING DETAIL
NTS

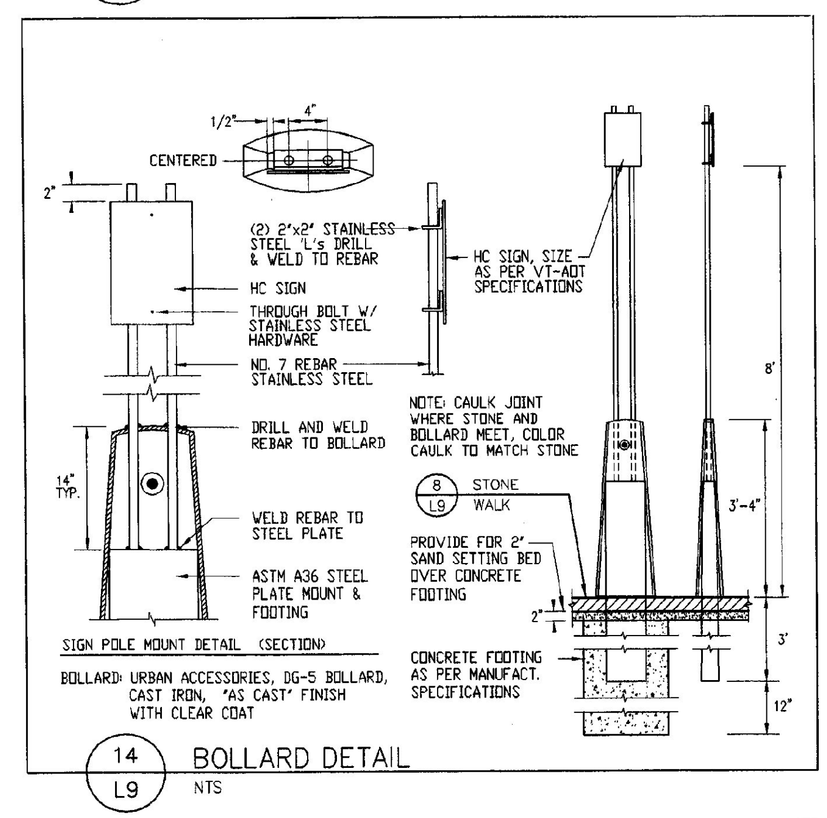

14 L9 BOLLARD DETAIL
NTS

REVISIONS	BY
1.16.2001	AGS

COPYRIGHT ©2000
OFFICE OF H. KEITH WAGNER
ALL RIGHTS RESERVED

CHAMPLAIN CONSULTING ENGINEERS
128 PRIM ROAD, P.O. BOX 453
COLCHESTER, VERMONT 05446
(802) 863-8060
(802) 864-1078 FAX

OFFICE OF H. KEITH WAGNER LANDSCAPE ARCHITECTS
7 Main Street, Suite 6 Essex Junction, VT 05452 T 802.878.6800 F 802.878.6807
79 Church Street Burlington, VT 05401 T 802.865.1102 F 802.865.1107
e-mail: hkw@hkwla.com

INTERSTATE 89 NORTH & SOUTH BOUND REST AREA
LANDSCAPE CONSTRUCTION DETAILS
WILLISTON VERMONT

DRAWN	AGS
CHECKED	HKW
SCALE	NTS
DATE	9-18-00
JOB NO.	99933
SHEET	L9

9 OF 11 SHEETS

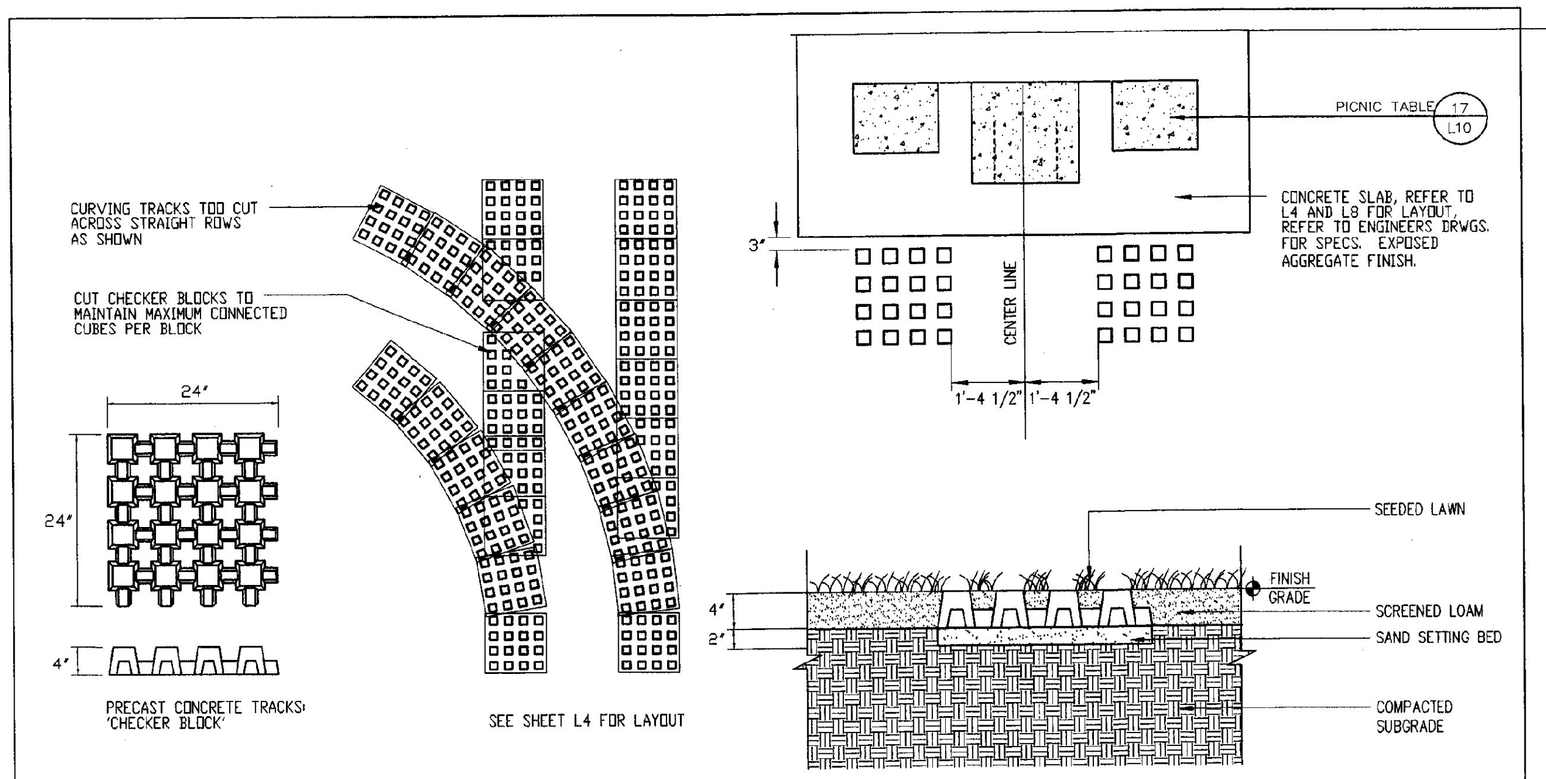

15 L10 PRECAST CONCRETE TRACKS IN LAWN
NTS

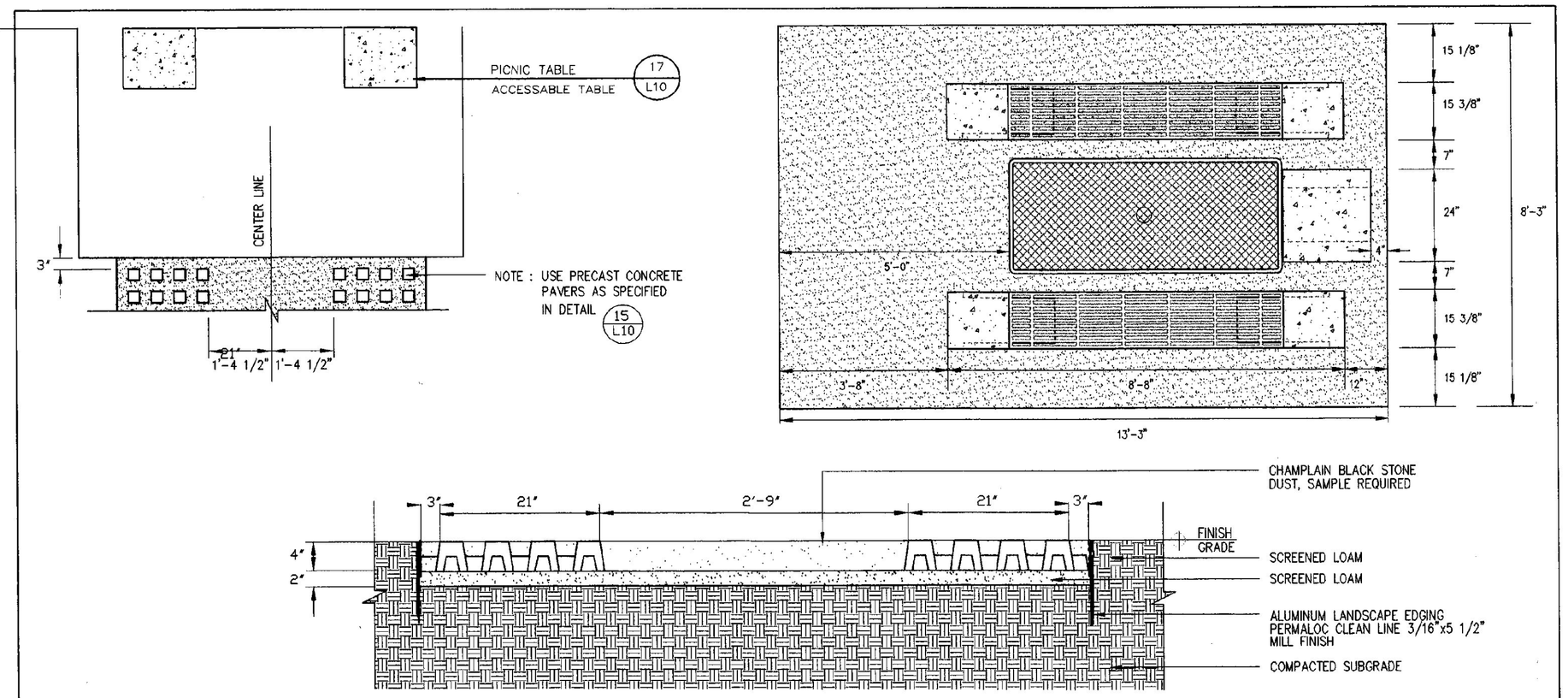

16 L10 PRECAST CONCRETE TRACKS IN STONEDUST (ACCESSIBLE TABLE: LAYOUT & MATERIALS)
NTS

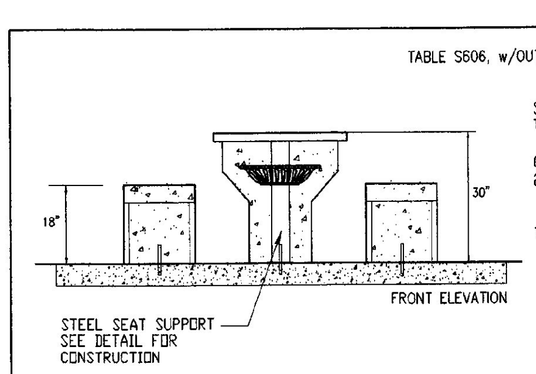

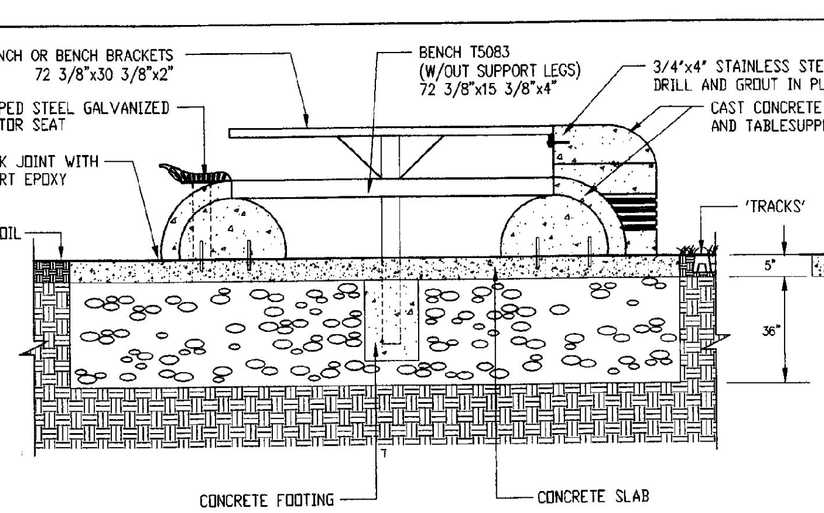

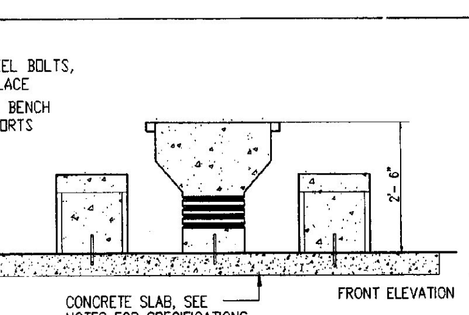

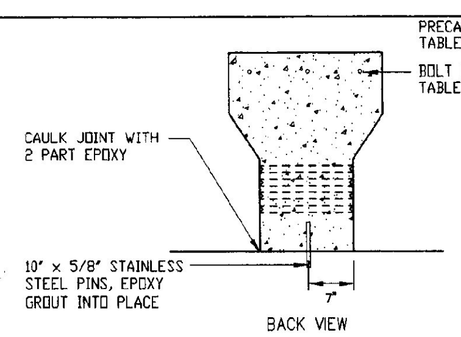

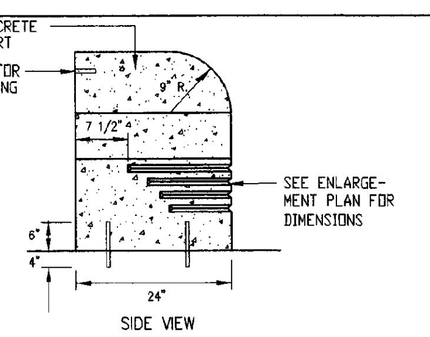

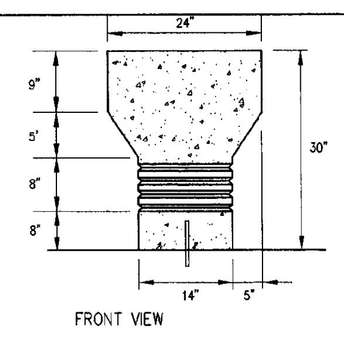

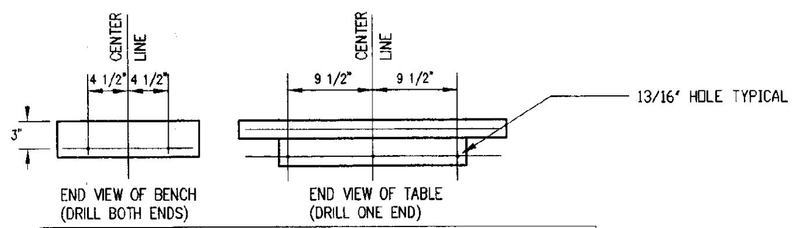

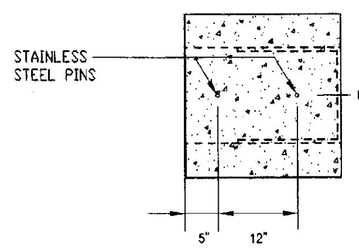

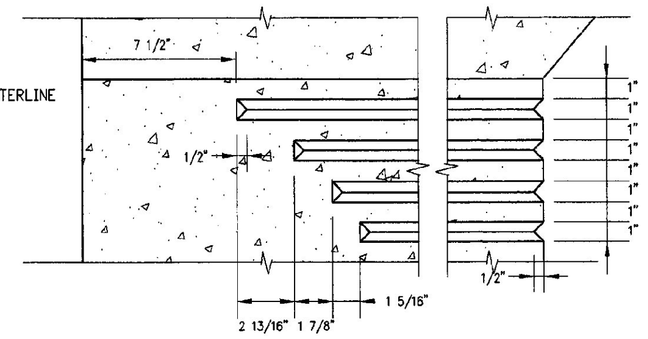

DETAIL ENLARGEMENT
3/16"=1"

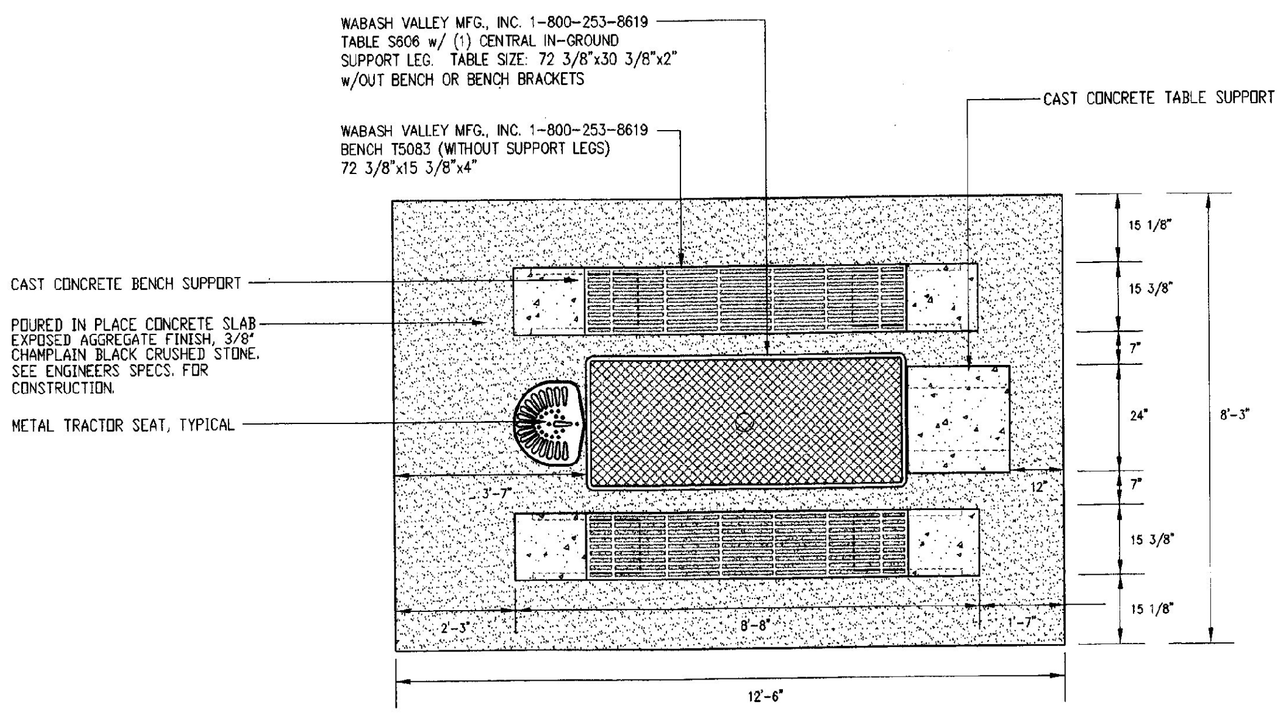

CAST CONCRETE TABLE SUPPORT
3/4" = 1'-0"

NOTES: (FOR PICNIC TABLES, CONC. SLABM AND SUPPORTS

PICNIC TABLES: FIVE TOTAL -ONE TO BE HANDICAP ACCESSABLE. ACCESSABLE TABLE TO HAVE TRACTOR SEAT AND SUPPORT PIPE DELETED.

REFER TO SHEET L4 FOR TABLE AND BENCH COLORS.

PRECAST CONCRETE TO BE 3500 PSI IN 28 DAYS. TINT WITH DAVIS COLOR GRAY, VERIFY TINT QUANITY WITH LANDSCAPE ARCHITECT. AGGREGATE TO BE 3/8" CHAMPLAIN BLACK CRUSHED STONE. SMOOTH FINISH, LIGHTLY GRIND ALL SHARP EDGES AND CORNERS, APPLY WATERPROOFING (SPRAY ON CLEAR SEALER, REDSEAL AS MANUFACTURED BY EUCLID CHEMICAL CO. OR APPROVED EQUIVALENT, APPLY AS PER MANUFACTURER'S SPECIFICATIONS) BENCH AND TABLE SUPPORT SAMPLE REQUIRED.

CONCRETE BENCH/TABLE SUPPORTS PINNED TO CONCRETE SLAB W/ 1/2" D. x 10" STAINLESS STEEL DOWELS. DRILL AND EPOXY GROUT IN PLACE.

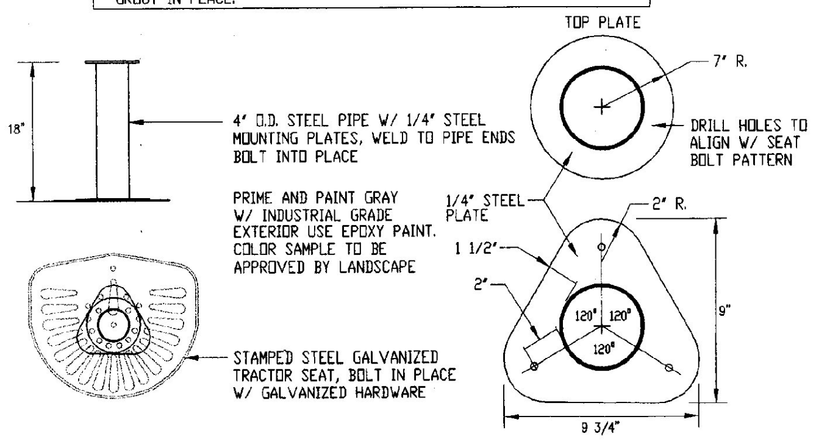

SEAT POST CONSTRUCTION
NTS

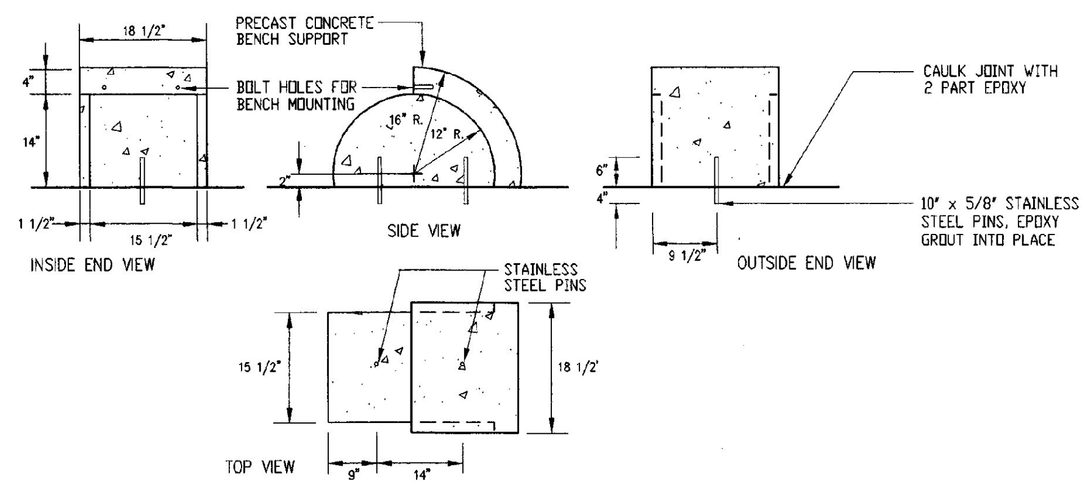

CAST CONCRETE BENCH SUPPORT
3/4" = 1'-0"

17 L10 PICNIC TABLES
1/2" = 1'-0"

REVISIONS	BY
1.16.2001	AGS

COPYRIGHT ©2000
OFFICE OF H. KEITH WAGNER
ALL RIGHTS RESERVED

CHAMPLAIN CONSULTING ENGINEERS
128 PRIM ROAD, P.O. BOX 453
COLCHESTER, VERMONT 05446
(802) 863-6060
(802) 864-1878 FAX

OHKW
OFFICE OF H. KEITH WAGNER
LANDSCAPE ARCHITECTS
7 Main Street, Burlington, VT 05401 T 802.864.0202 F 802.864.0207
136 Clifton Street, Cambridge, MA 02138 T 617.441.2000 F 617.354.2077
e-mail@ohkw.net

INTERSTATE 89 NORTH & SOUTH BOUND REST AREA
LANDSCAPE CONSTRUCTION DETAILS
WILLISTON VERMONT

DRAWN	AGS
CHECKED	HKW
SCALE	NTS
DATE	9-18-00
JOB NO.	99933
SHEET	L10

10 OF 11 SHEETS

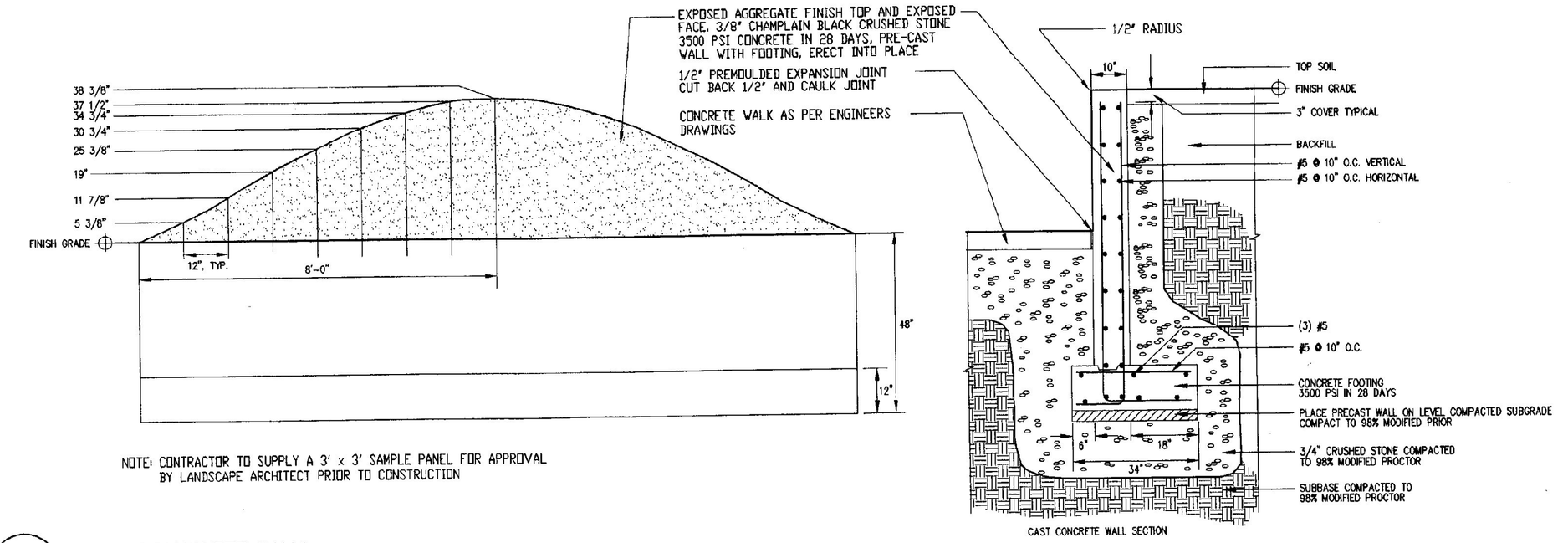

NOTE: CONTRACTOR TO SUPPLY A 3' x 3' SAMPLE PANEL FOR APPROVAL BY LANDSCAPE ARCHITECT PRIOR TO CONSTRUCTION

CAST CONCRETE WALL SECTION

18 L11sb CAST CONCRETE WALL
SCALE; 1/2" =1'-0"

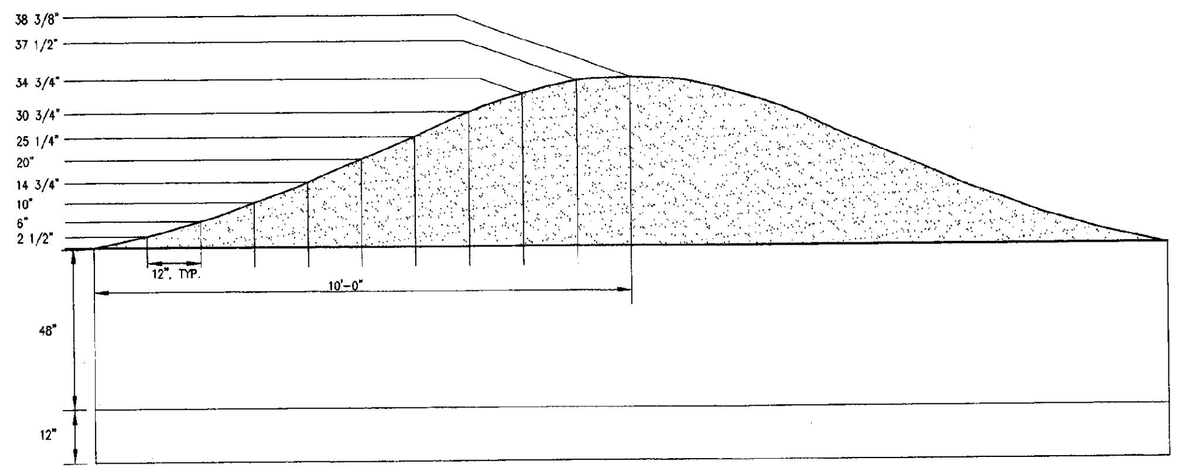

18a L11sb LARGE CAST CONCRETE WALL
SCALE; 1/2" =1'-0"

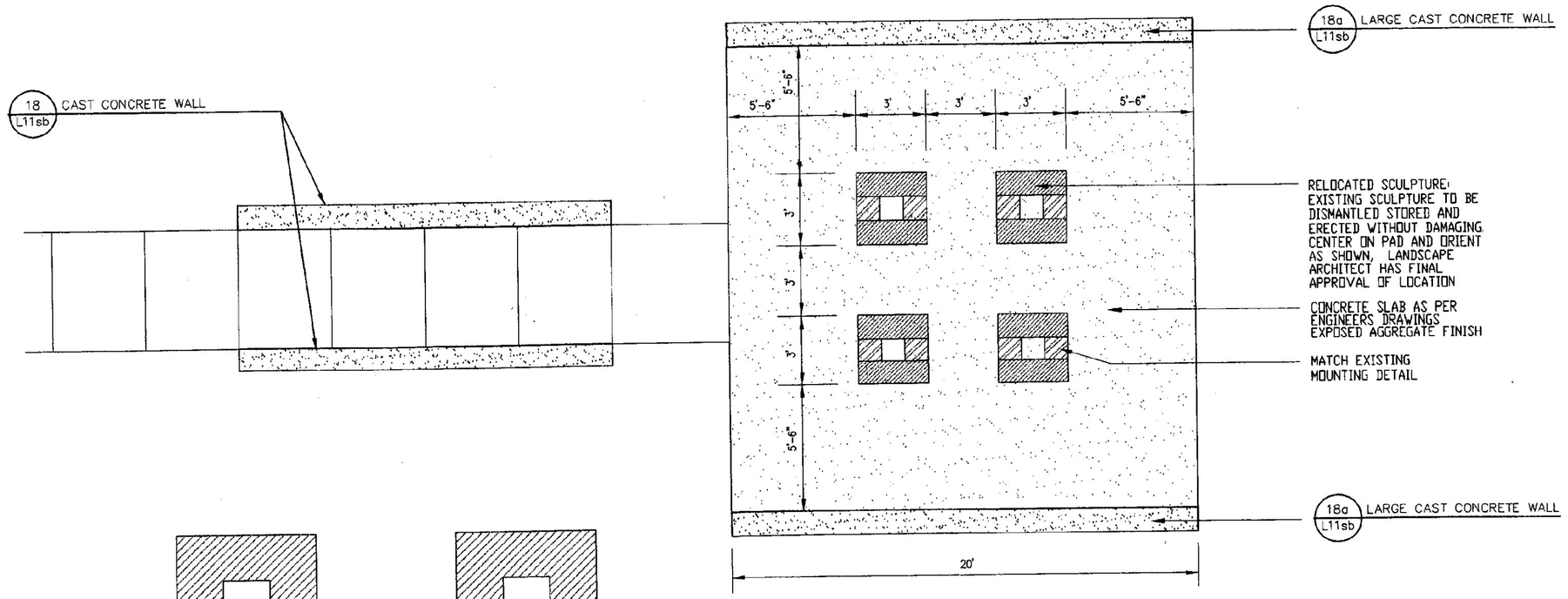

PLAN
SCALE; 1/4" =1'-0"

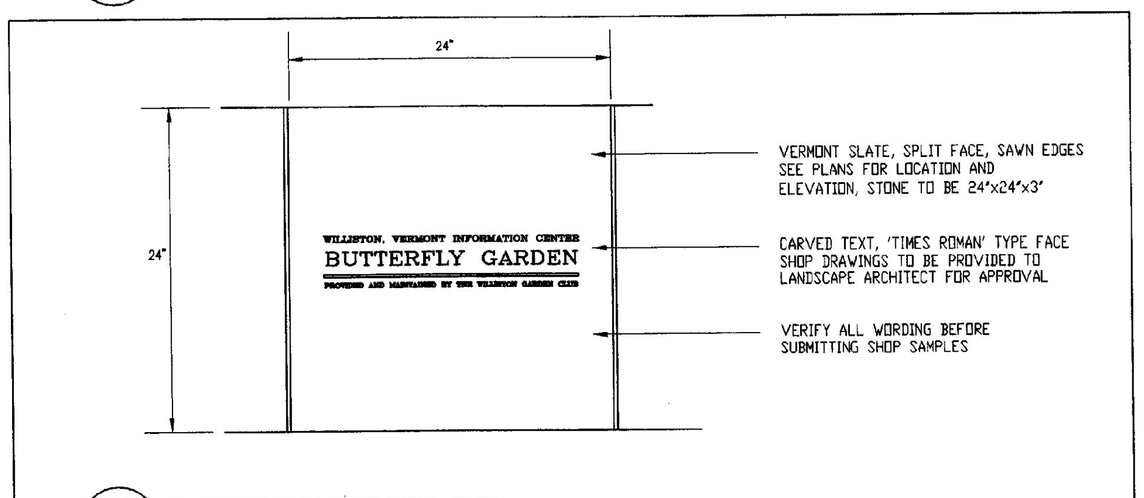

20 L11sb BUTTERFLY GARDEN SIGN
SCALE; 1 1/2" =1'-0"

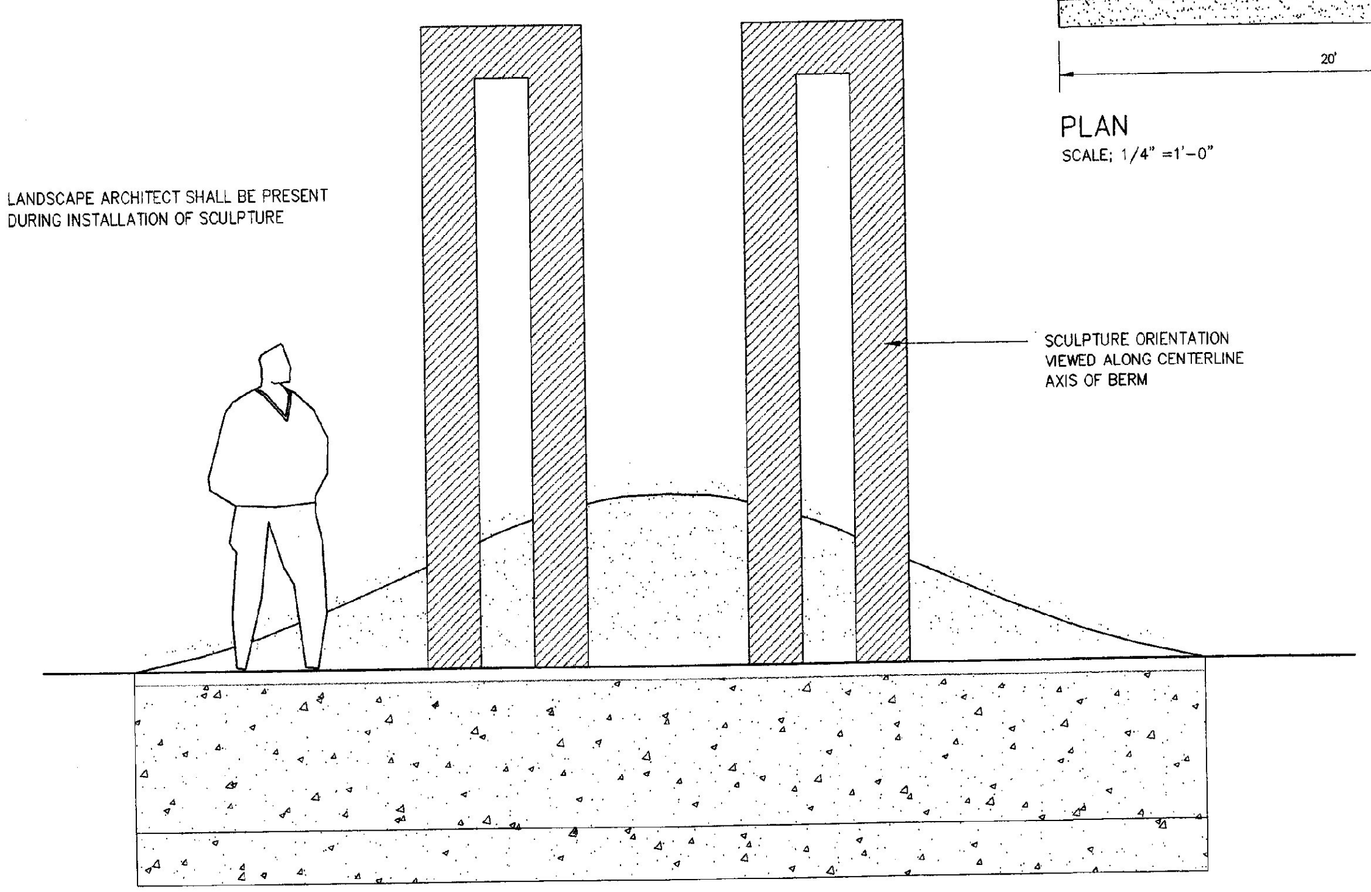

19 L11sb RELOCATED SCULPTURE DETAIL
SCALE; 1/2" =1'-0"

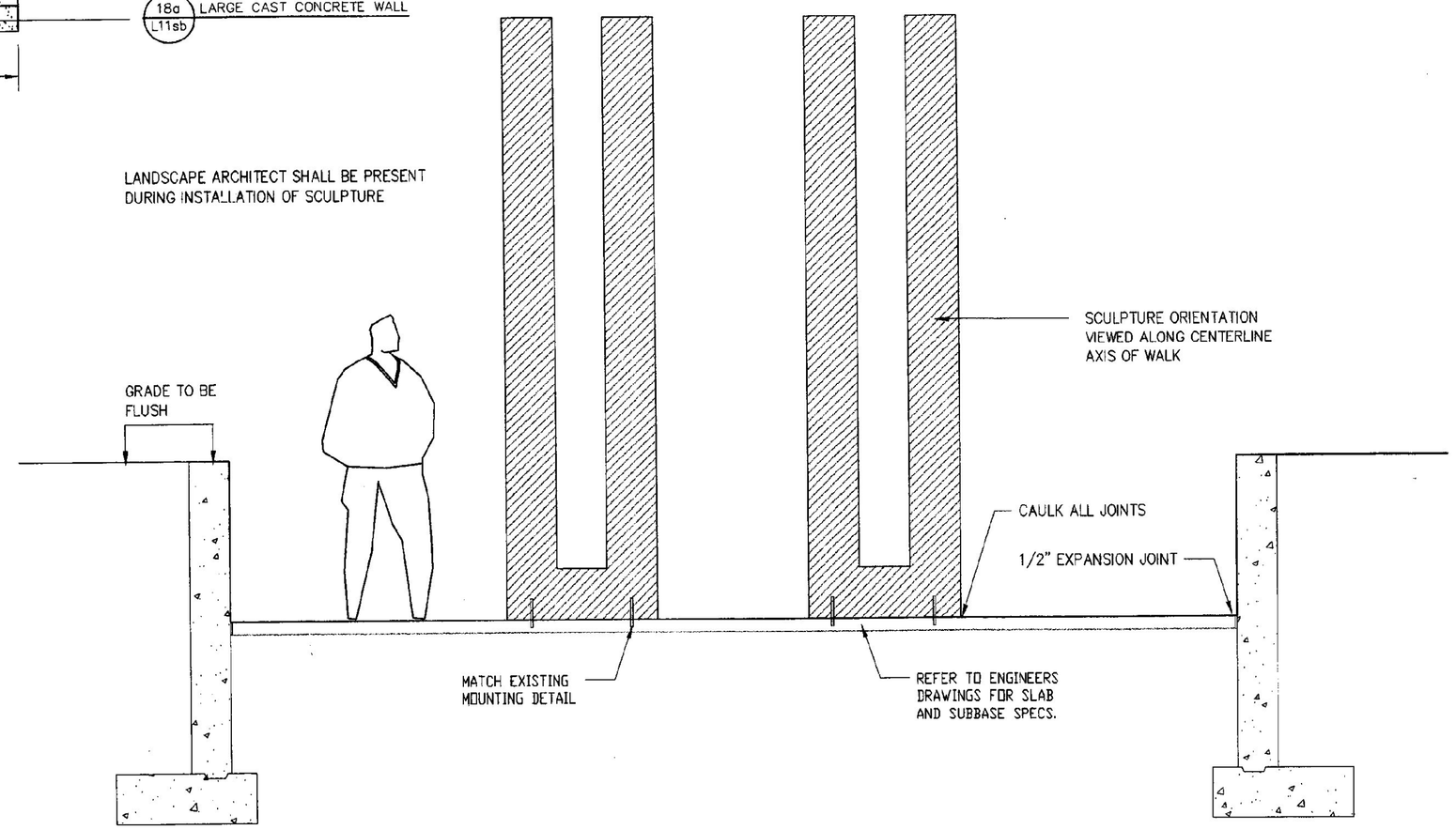

REVISIONS	BY
1.16.2001	AGS

COPYRIGHT ©2000
OFFICE OF H. KEITH WAGNER
ALL RIGHTS RESERVED

CHAMPLAIN CONSULTING ENGINEERS
128 PRIM ROAD, P.O. BOX 453
COLCHESTER, VERMONT 05446
(802) 863-6060
(802) 864-1878 FAX

OHKW
LANDSCAPE ARCHITECTS

INTERSTATE 89 SOUTHBOUND
REST AREA
LANDSCAPE
CONSTRUCTION DETAILS
WILLISTON VERMONT

DRAWN	AGS
CHECKED	HKW
SCALE	NTS
DATE	9-18-00
JOB NO.	99933
SHEET	L11sb

11 of 11 SHEETS

CODE SUMMARY

I89 WILLISTON NB & SB: BOCA 87/ NFPA 101 - 94 Code Summary - October 28, 1999

OCCUPANCY BOCA/NFPA:

Business OccupancyBOCA 87 - Use Group B/NFPA 101 - 94 Chapter 26
(Confirmed J. Vergin, 2/1994)

BOCA 87 303.1 "...transaction of business...or other services involving stocks of goods...in limited quantities for use incidental to office uses, or sample purposes."

NFPA 4 - 41.8 "...used for the transaction of business.....include city halls, (various) offices, town halls."

These buildings are information and toilet facilities which are staffed to assist travelers with bathroom needs, questions, problems, obtaining brochures or helping make arrangements, somewhat similar to travel agency. They clearly fall within the realm of Business rather than Assembly occupancy which is defined as "deliberation, worship, entertainment, eating, drinking, amusement or awaiting transportation."

Assembly Occupancy Review:

Information Room less fixed display, staff and corridor as per NFPA 101 - 1994 8-1.7.1:

670 net sf @ 15 sf per person = 45 plus 2 staff = 47 < 50 OK

Therefore, the main room does not cross Assembly occupancy threshold and is within the overall Business classification.

HEIGHT/AREA:

5B Unprotected - BOCA Table 501

B - Business: 7,200 sf, 2 St. 30' Allowed

4,281 enclosed + 350 porch = 4,631 sf < 7,200 OK

1 story, 24' (mean gable) < 2 st. 30' OK

HEIGHT & AREA MODIFICATIONS: Not Required.

FIRERESISTANCE RATINGS:

5B Unprotected - BOCA Table 401

Exterior Walls - Load Bearing - 0 hr. (906.2 > 10' : 0 hr.)

Fire Separation Assemblies - Not required

Exit Access Corridors - Not required

Interior Structural members - 0 hr.

NFPA 101 - CHAPTER 26:

New Business Occupancies

26 -1.5.1 Hazard of Contents - Ordinary Hazard

26 - 1.7 Occupant Load (Actual) Information :

670 net sf @ 15 sf per person	= 45
Total Staff =	4
Bathrooms =	37
Vestibule - 150 net @ 15 =	10
TOTAL =	96

26 - 2.3.2 Corridor Width: 3' - 8" minimum width

26 - 2.4 Number of Exits Exception 1:

Typically two exits are required but there is an exception for occupant loads in a room or area less than 100, with a total travel distance not over 100', a single exit is permitted.

Total Occupant Load 96 < 100 OK
Travel Distance 96 < 100' OK

Therefore a single exit permitted. Note that an informal second exit through staff areas does exist, but we are not calling it a formal part of our exiting requirement since it is not required.

26 - 2.8 Illumination of Means Of Egress:

Refer to Section 5 - 8: 1 footcandle required:

Daylight hours - sufficient natural light is available to exceed
Artificial - Calculations by Rudd show requirement exceeded.

26 - 2.9 Emergency Lighting:

Required if:
1. 2 or more stories in height above level of exit discharge
2. 50 or more occupants above or below level of exit discharge
3. total occupancy of more than 300

We do not fall under any of these categories therefore emergency lighting is not required, however, we have decided to provide it in the interests of greater safety.

26 - 2.10 Marking of Means of Egress:

Refer to Section 5 - 10:

5 - 10.1.2" Main Exterior exit doors that obviously and clearly are identifiable as exits are an exception to requirement that means of egress shall be marked.

A5 - 10 1.2. Where a main entrance also serves as an exit, it will usually be sufficiently obvious to occupants so that no exit sign is needed.

Therefore we consider the main door and vestibule door to be sufficiently obvious so no signage required. We are installing a sign directly outside of the bathrooms where there are several options and doors in order to make the path of travel clear.

26 - 3.4 Detection, Alarm & Com. Systems:

Same conditions as emergency lighting, therefore not required, however the Owner has elected tp provide a system with detection and manual pull stations.

SUMMARY:

This project exceeds code requirements by virtue of providing emergency lighting and an alarm detection system when they are not required by BOCA/NFPA.

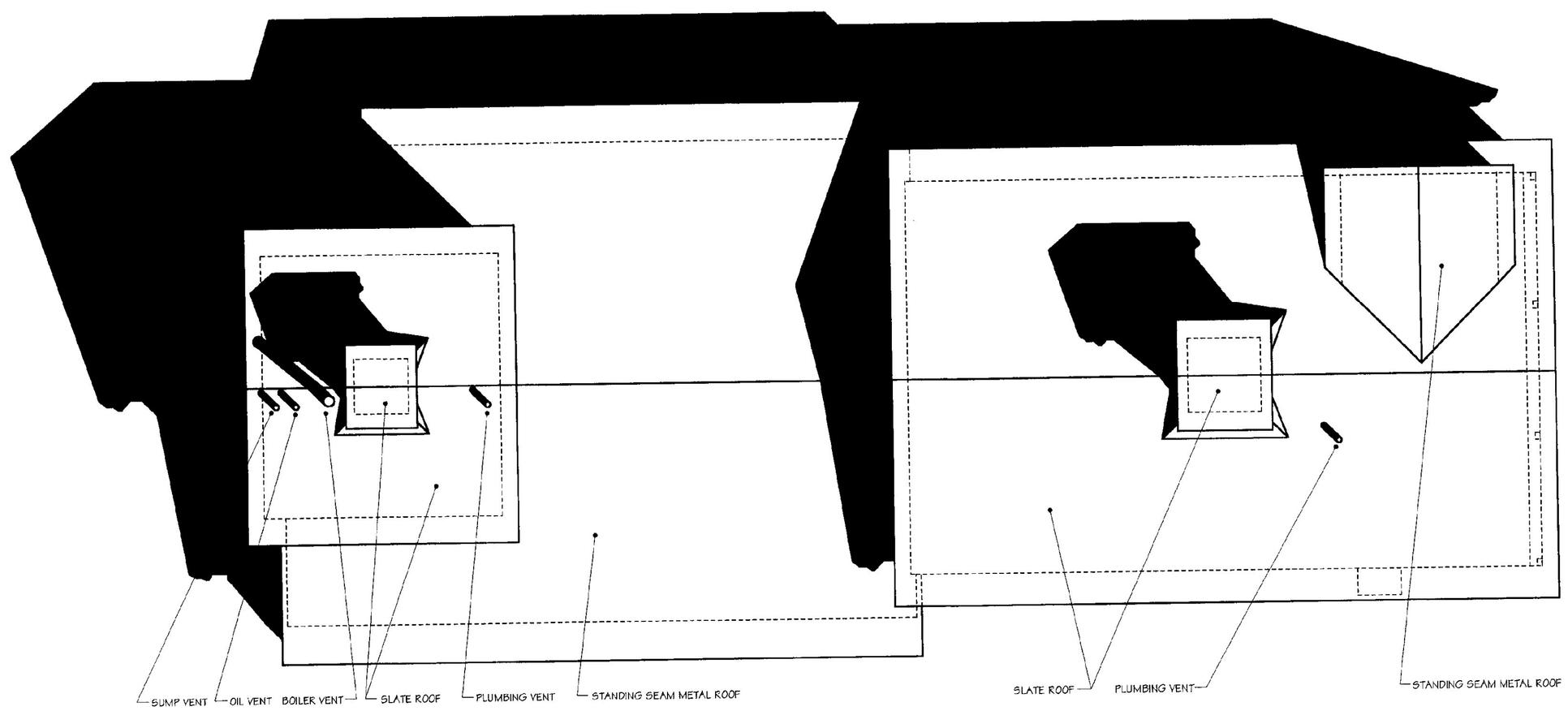

ROOF PLAN

NOTE: LIGHTNING PROTECTION TO BE LOCATED AS PER SPECIFICATION AND IN CONSULTATION WITH ARCHITECT

ARCHITECTURAL DRAWING INDEX

A0sb CODE SUMMARY & ROOF PLAN
A1sb FLOOR PLAN
A2sb FLOORING FINISHES PLAN
A3sb REFLECTED CEILING PLAN
A4sb LOFT PLAN
A5sb CRAWL SPACE PLAN
A6sb SERVICE BUILDING - PLAN/SECTION/ELEVATIONS
A7sb ELEVATION - MAIN ENTRY GABLE
A8sb ELEVATION - AUTO ENTRY
A9sb ELEVATION - TRUCK ENTRY
A10sb ELEVATION - SERVICE GABLE
A11sb SECTION 1 - ENTRY
A12sb SECTION 2 - INFORMATION
A13sb SECTION 3 - INFORMATION
A14sb SECTION 4 - BATHROOMS
A15sb SECTION 5 - SERVICE ZONE
A16sb SECTION 6 - PARTIAL LONGITUDINAL
A17sb FRONT BATHROOM/VENDING DETAILS
A18sb INTERIOR ELEVATIONS
A19sb INTERIOR ELEVATIONS
A20sb INTERIOR ELEVATIONS
A21sb INTERIOR ELEVATIONS
A22sb TYPICAL WALL & FLOOR DETAILS
A23sb WALL SECTION DETAILS
A24sb WALL SECTION DETAILS
A25sb BIG CUPOLA DETAILS
A26sb MILLWORK: RECEPTION
A27sb MILLWORK: COFFEE, BENCH, COMPUTER
A28sb MILLWORK: DISPLAY UNITS
A29sb MILLWORK: DISPLAY UNITS
A30sb LITTLE CUPOLA DETAILS
A31sb CONNECTOR & SECTION DETAILS
A32sb ROOM & DOOR SCHEDULES, DOOR/WINDOW DETAILS
A33sb TELEPHONE KIOSK DETAILS

REGISTERED ARCHITECT
MICHAEL WISNIEWSKI
No. 1202
STATE OF VERMONT

JANUARY 16, 2001

A0sb

WILLISTON INFORMATION CENTER I89 Southbound

Project #: IM - BLDG (4)

DUNCAN • WISNIEWSKI ARCHITECTURE
255 SOUTH CHAMPLAIN STREET, BURLINGTON, VERMONT 05401 802.864.6693

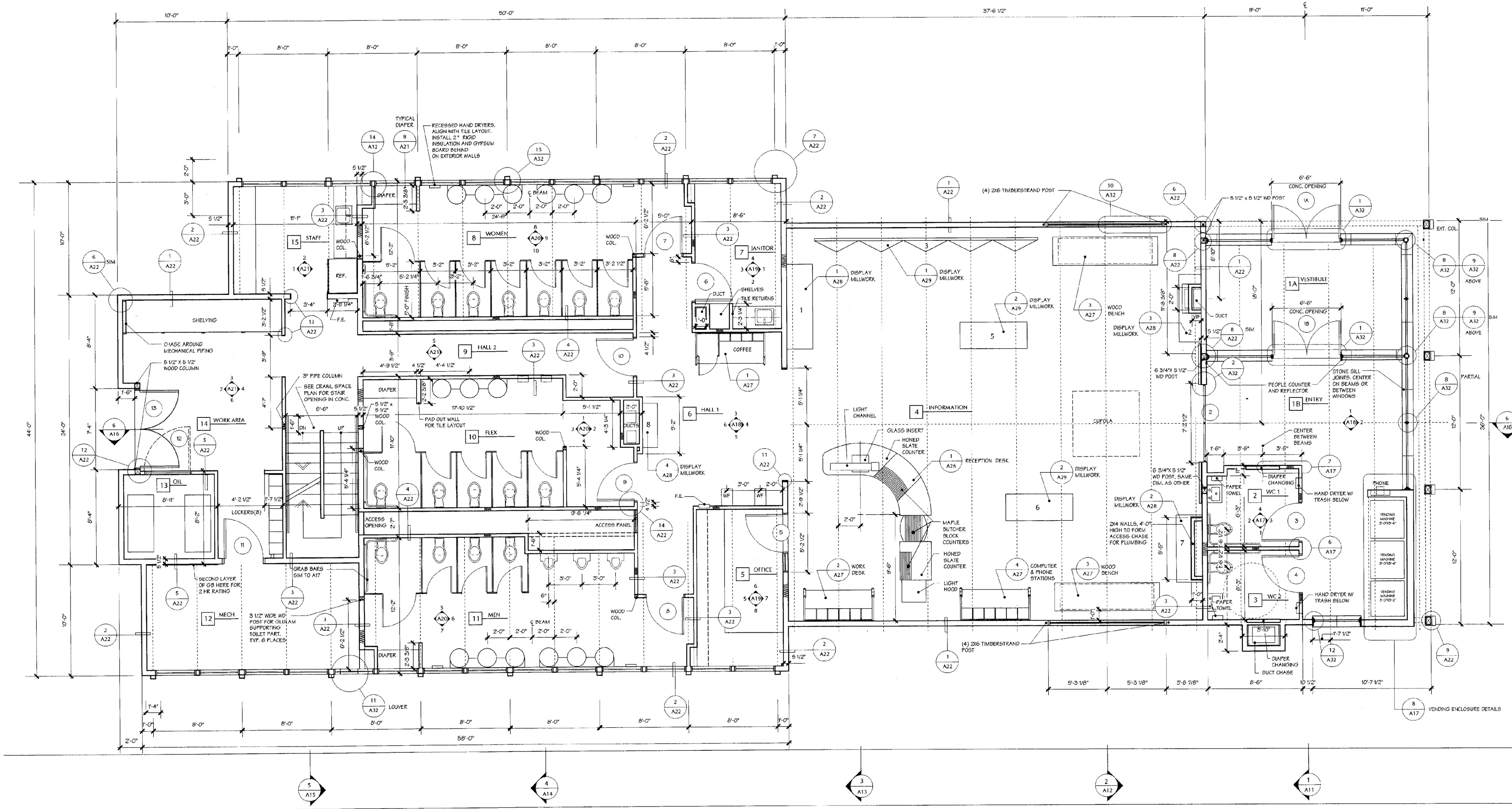

FLOOR PLAN

1/4" = 1' - 0"

NOTE: ALL DIMENSIONS TO ROUGH FRAMING UNLESS NOTED OTHERWISE

REGISTERED ARCHITECT MICHAEL WISNIEWSKI No. 1202 STATE OF VERMONT

JANUARY 16, 2001

WILLISTON INFORMATION CENTER I89 Southbound

Project #: IM - BLDG (4)

DUNCAN • WISNIEWSKI ARCHITECTURE ■
255 SOUTH CHAMPLAIN STREET, BURLINGTON, VERMONT 05401 802.864.6693

A1sb

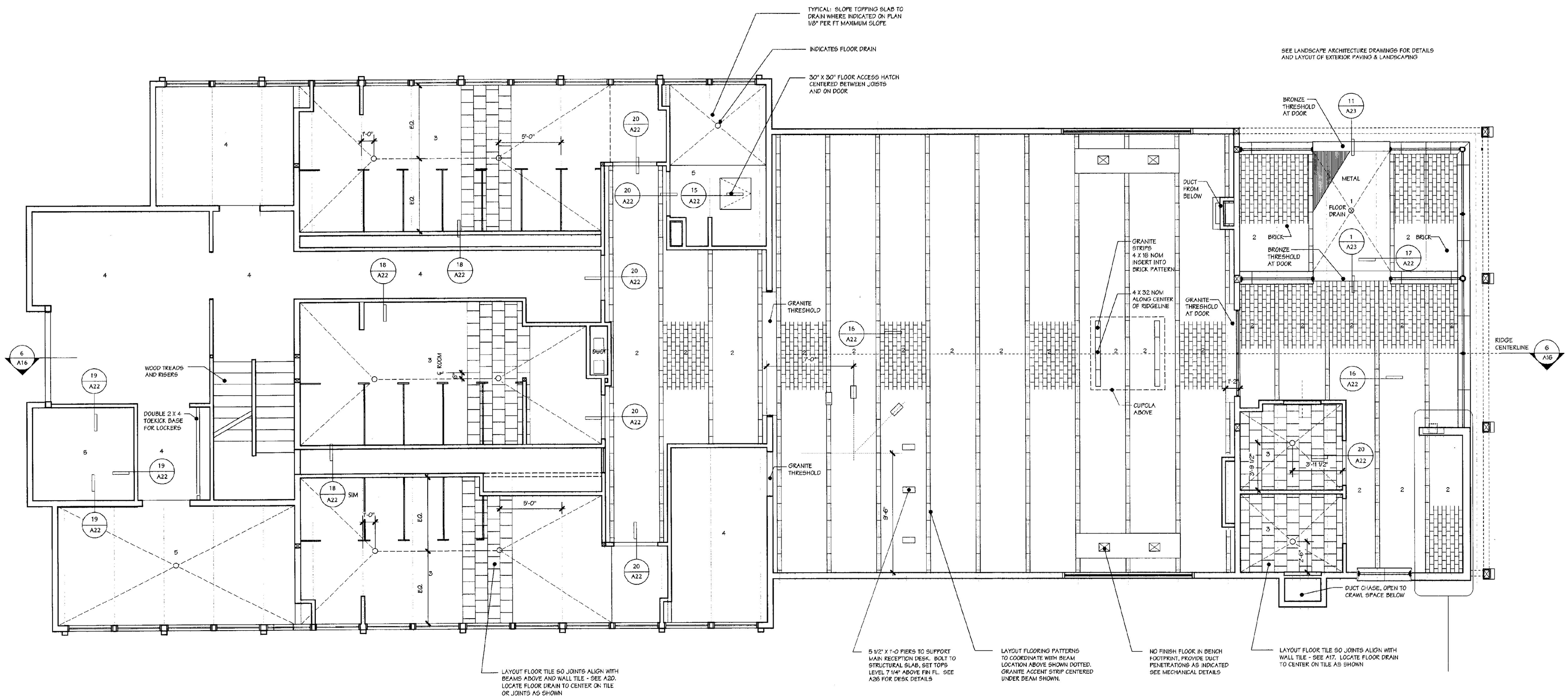

N

FLOORING FINISHES PLAN

1/4" = 1' - 0"

FLOOR FINISHES (SEE FINISH SCHEDULE AND DETAILS FOR ADDITIONAL INFORMATION):

1. FLUSH METAL GRID FLOOR MATT WITH GRANITE ACCENT STRIPS OVER SLOPED TOPPING SLAB
2. BRICK PAVERS (4X8 NOM) WITH GRANITE ACCENT STRIPS (4X16 NOM) ON BASE SLAB
3. TILE(12 X 12 NOM) ON SLOPED TOPPING SLAB
4. SHEET VINYL OVER TOPPING SLAB
5. SEALED TOPPING SLAB, SLOPE TO DRAIN WHERE INDICATED

REGISTERED ARCHITECT MICHAEL WISNIEWSKI No. 1202 STATE OF VERMONT

JANUARY 16, 2001

DUNCAN • WISNIEWSKI ARCHITECTURE ■
255 SOUTH CHAMPLAIN STREET, BURLINGTON, VERMONT 05401 802.864.6693

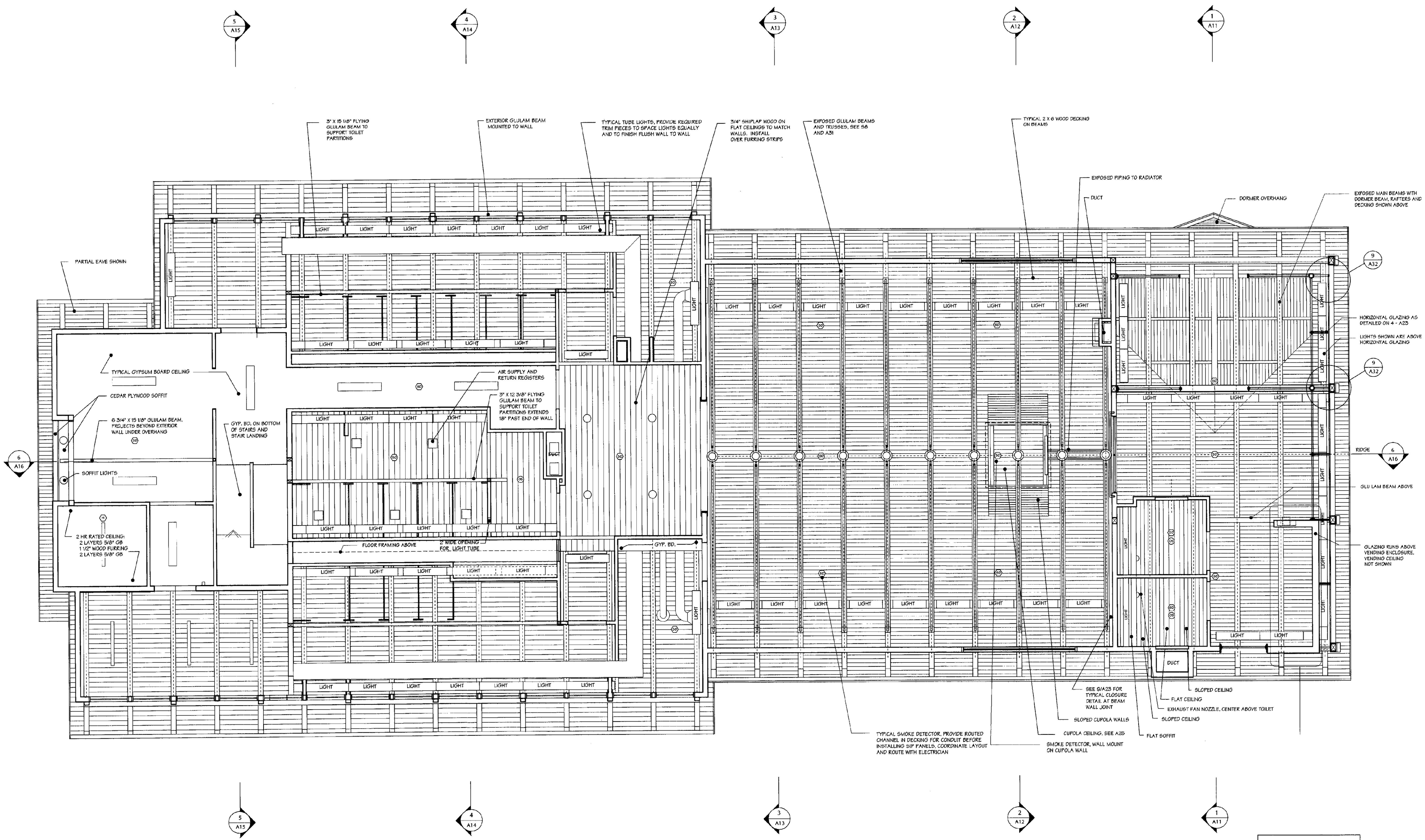

N

REFLECTED CEILING PLAN

1/4" = 1' - 0"

REGISTERED ARCHITECT MICHAEL WISNIEWSKI No. 1002 STATE OF VERMONT

JANUARY 16, 2001

WILLISTON INFORMATION CENTER I89 Southbound

Project #: IM - BLDG (4)

DUNCAN • WISNIEWSKI ARCHITECTURE ■
255 SOUTH CHAMPLAIN STREET, BURLINGTON, VERMONT 05401 802.864.6693

A3sb

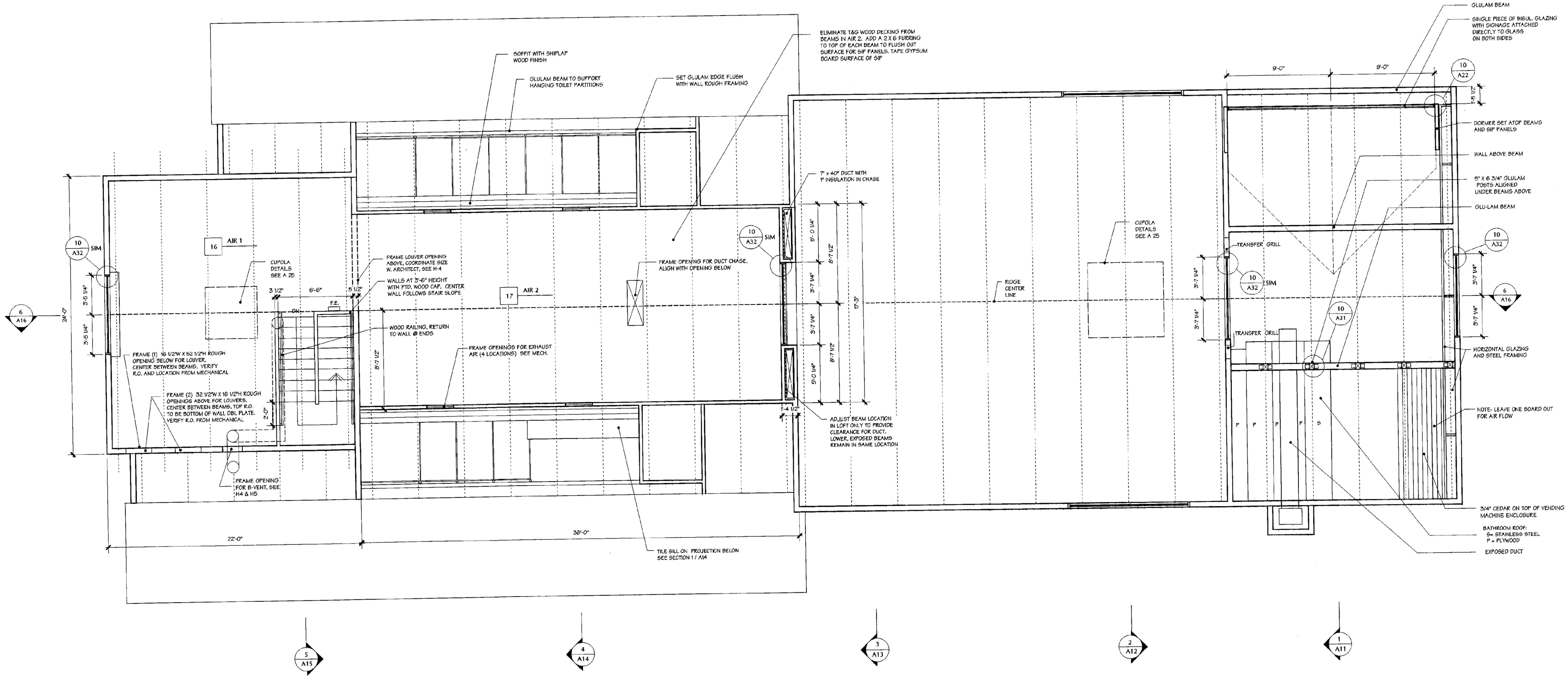

LOFT PLAN

1/4" = 1' - 0"

REGISTERED ARCHITECT MICHAEL WISNIEWSKI No. 1202 STATE OF VERMONT

JANUARY 16, 2001

A4sb

WILLISTON INFORMATION CENTER I89 Southbound

Project #: IM - BLDG (4)

DUNCAN • WISNIEWSKI ARCHITECTURE ■
255 SOUTH CHAMPLAIN STREET, BURLINGTON, VERMONT 05401 802.864.6693

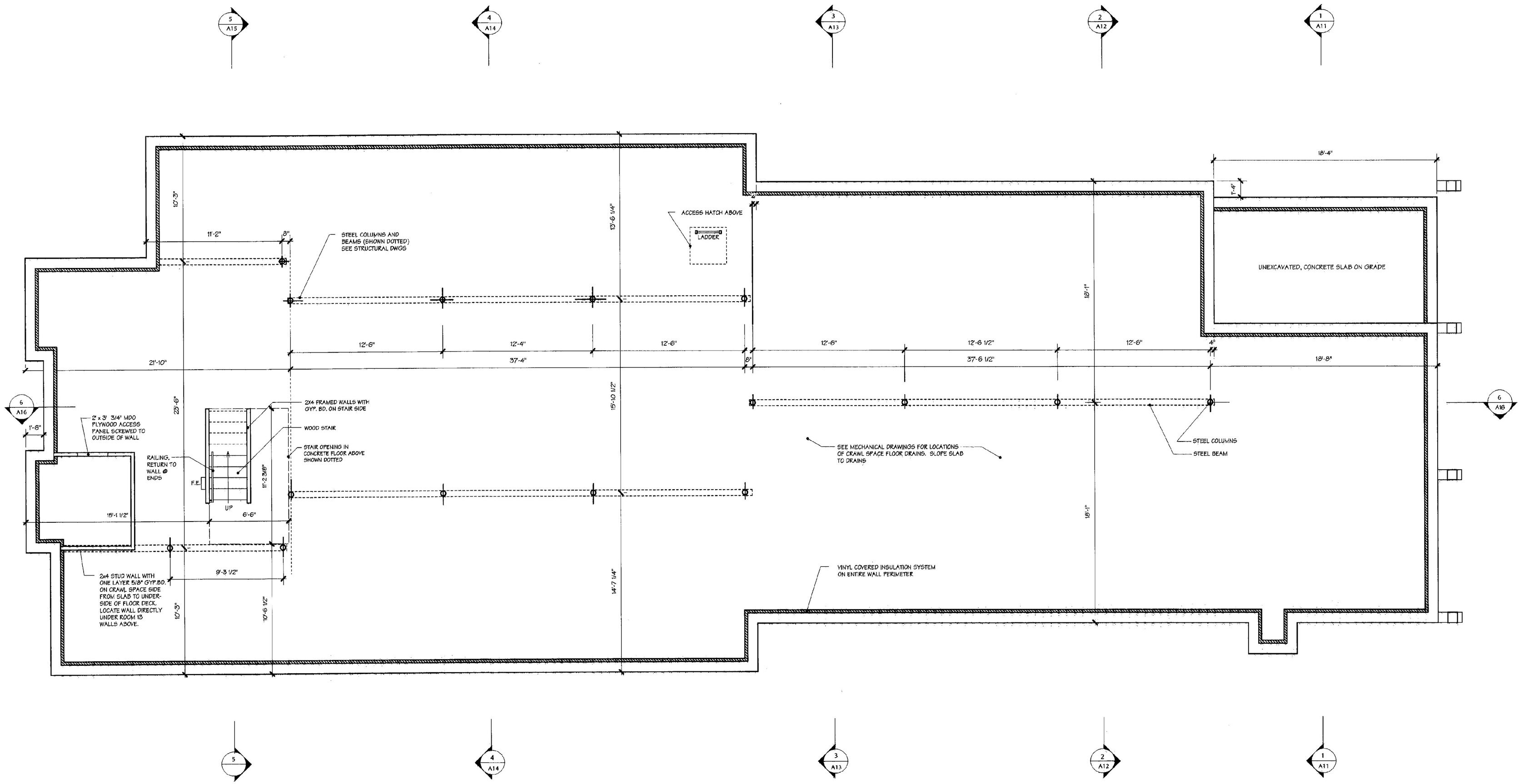

CRAWL SPACE PLAN
A15

1/4" = 1' - 0"

NOTE: PROVIDE PERIMETER DRAIN TILE AROUND ENTIRE FOUNDATION. SEE CIVIL DRAWINGS FOR DETAILS, DIMENSIONS AND CLEANOUTS

PROVIDE DAMP PROOFING

REGISTERED ARCHITECT MICHAEL WISNIEWSKI No. 1292 STATE OF VERMONT

JANUARY 16, 2001

WILLISTON INFORMATION CENTER I89 Southbound

Project #: IM - BLDG (4)

DUNCAN • WISNIEWSKI ARCHITECTURE ▪
255 SOUTH CHAMPLAIN STREET, BURLINGTON, VERMONT 05401 802.864.6693

A5sb

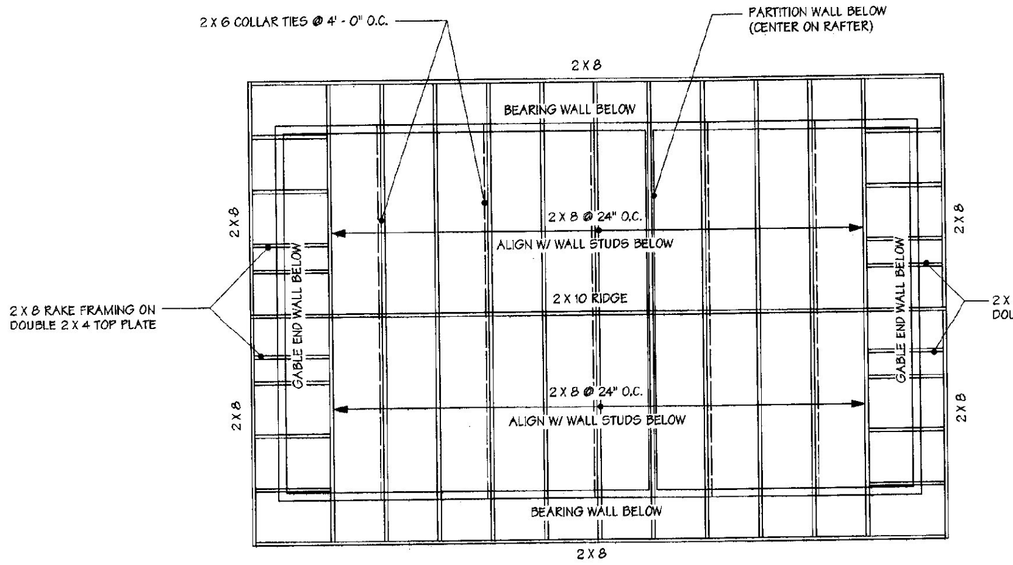

3 ROOF FRAMING PLAN

1/4" = 1' - 0"

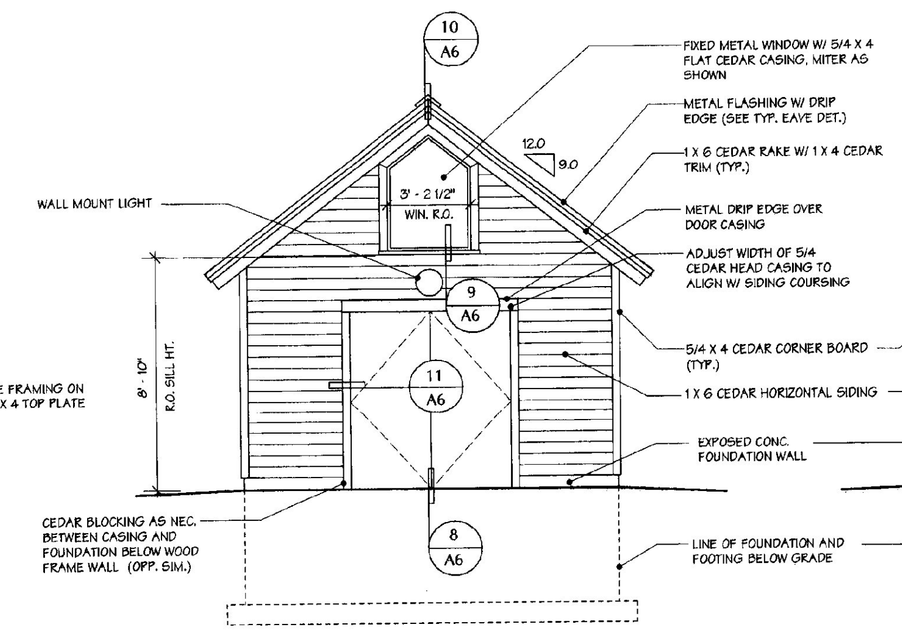

4 ELEVATION

1/4" = 1' - 0"

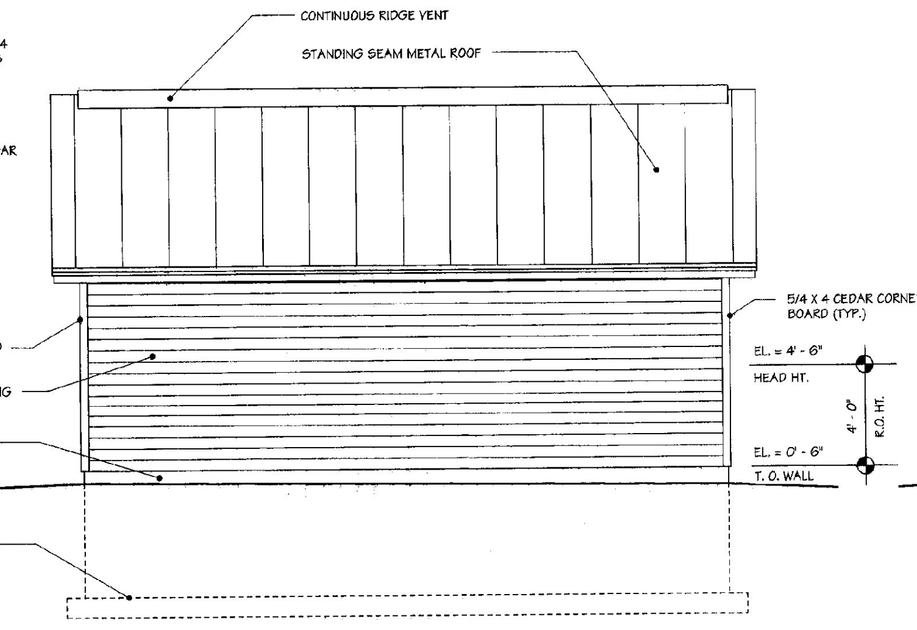

5 ELEVATION

1/4" = 1' - 0"

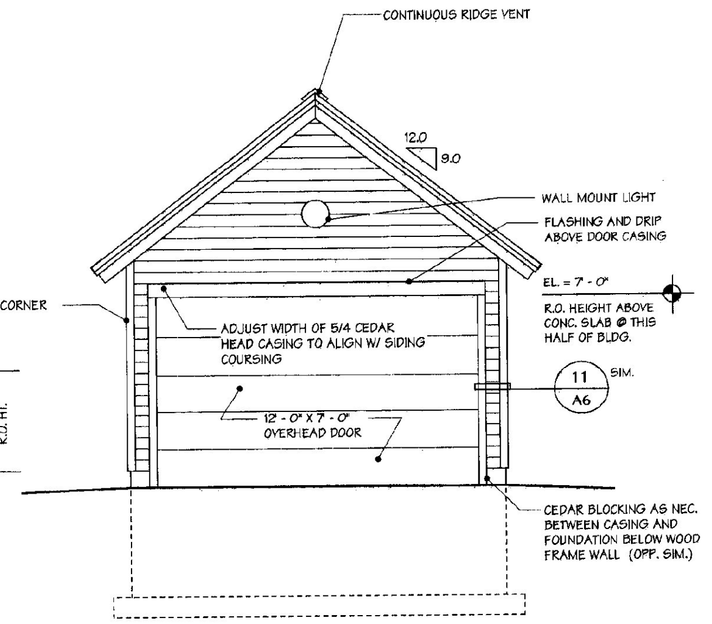

6 ELEVATION

1/4" = 1' - 0"

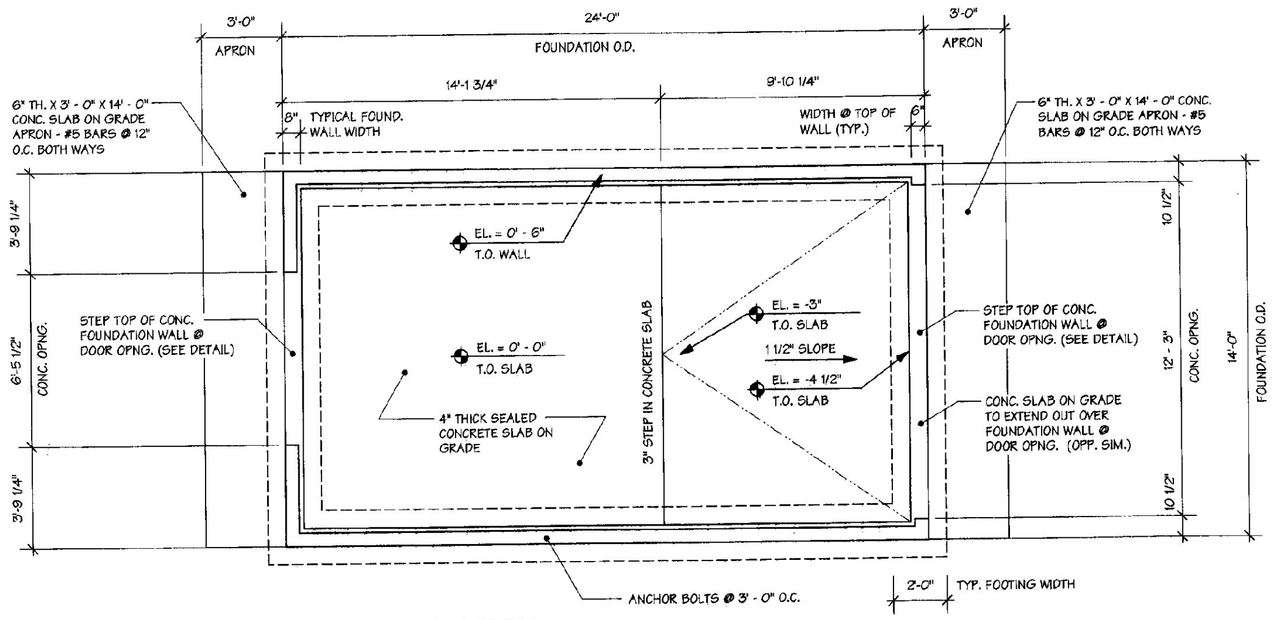

2 FOUNDATION PLAN

1/4" = 1' - 0"

1 FLOOR PLAN

NORTH

1/4" = 1' - 0"

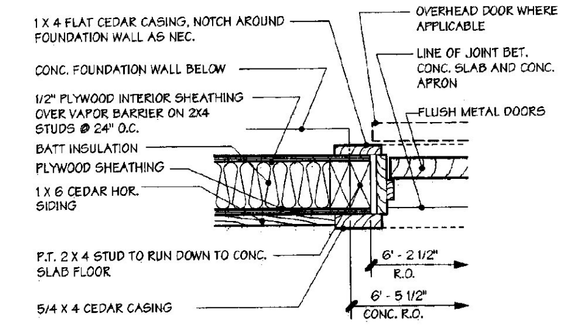

11 DETAIL @ DOOR JAMB

1 1/2" = 1' - 0"

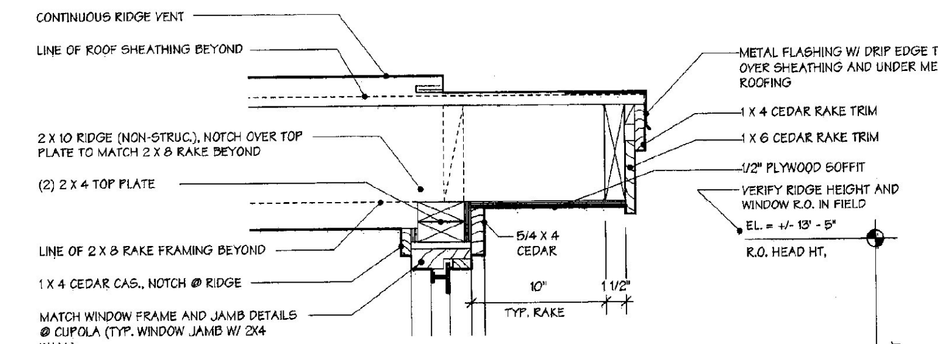

10 DET. @ WIN. HEAD/RIDGE

1 1/2" = 1' - 0"

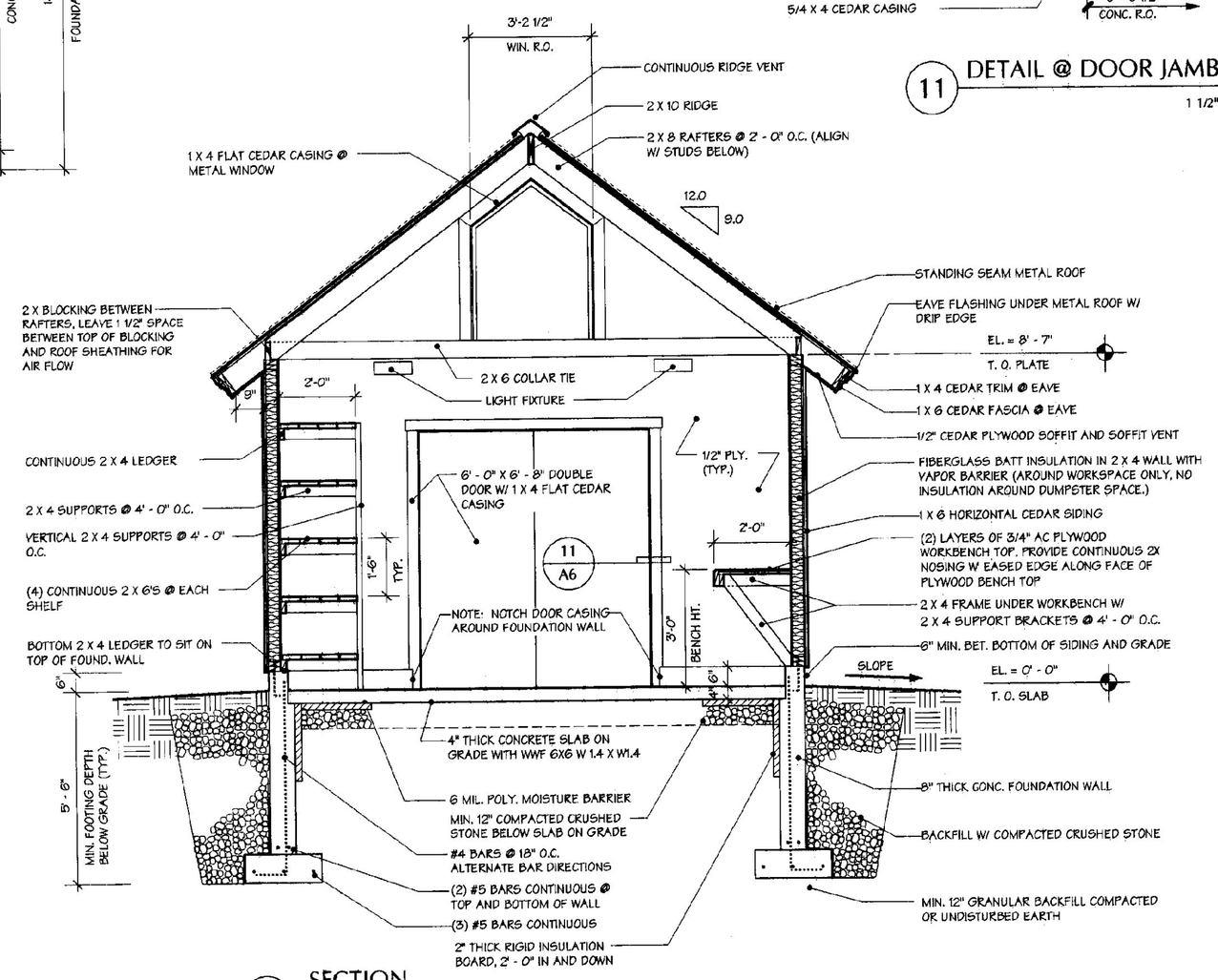

7 SECTION

3/8" = 1' - 0"

9 DETAIL @ WIN. SILL

1 1/2" = 1' - 0"

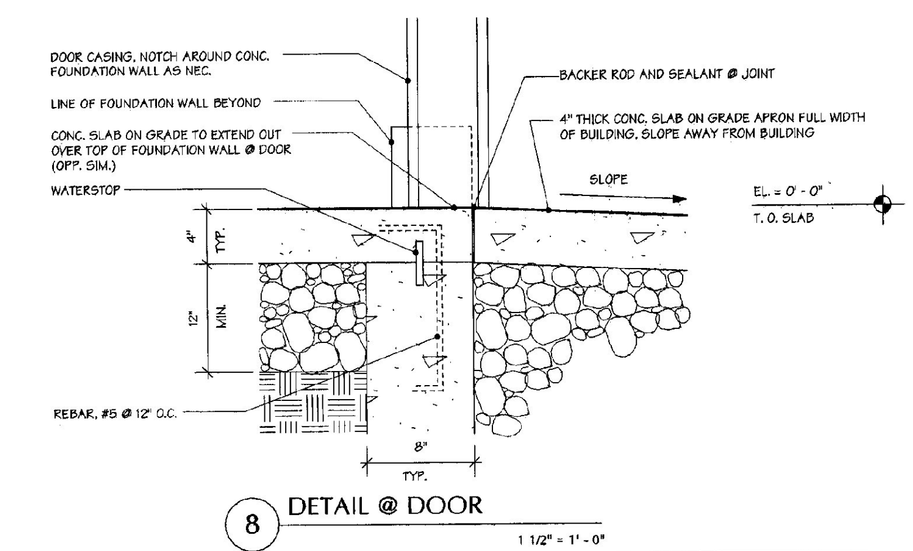

8 DETAIL @ DOOR

1 1/2" = 1' - 0"

REGISTERED ARCHITECT MICHAEL WISNIEWSKI No. 1202 STATE OF VERMONT

JANUARY 16, 2001

A6sb

WILLISTON INFORMATION CENTER I89 Southbound

Project #: IM - BLDG (4)

DUNCAN • WISNIEWSKI ARCHITECTURE ■
255 SOUTH CHAMPLAIN STREET, BURLINGTON, VERMONT 05401 802.864.6693

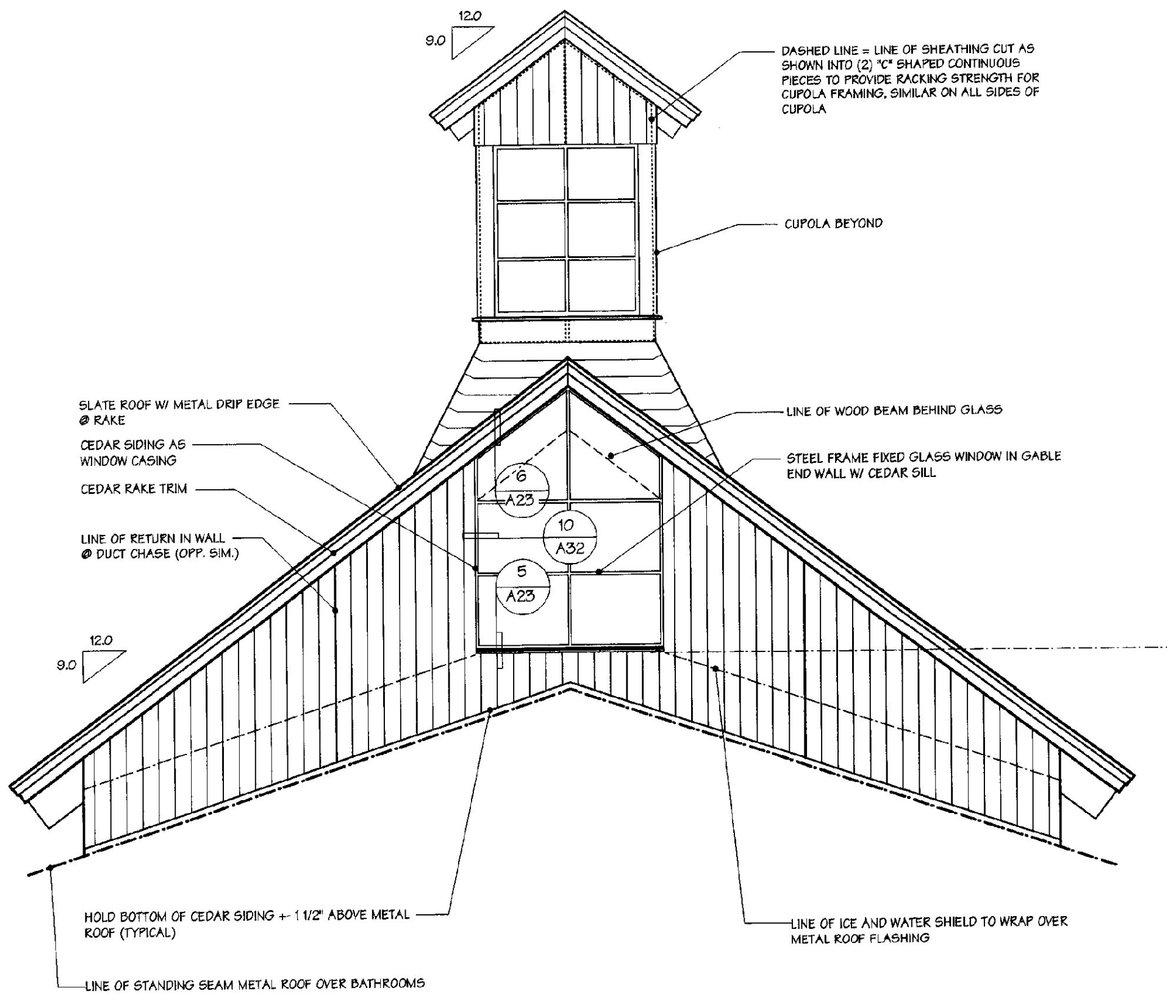

1 OPP. MAIN ENTRY GABLE ELEVATION

1/4" = 1' - 0"

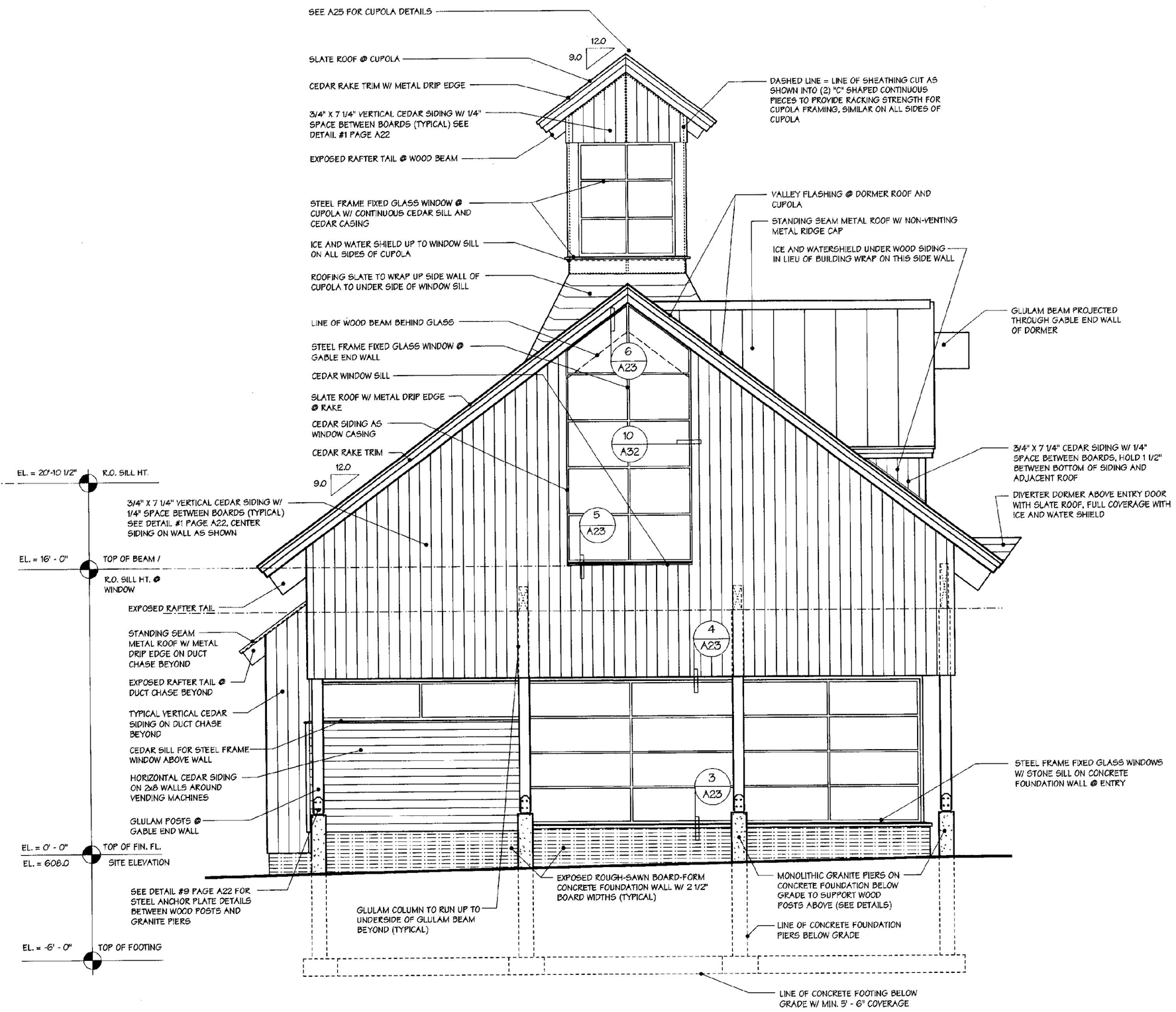

2 MAIN ENTRY GABLE ELEVATION

1/4" = 1' - 0"

WILLISTON INFORMATION CENTER I89 Southbound

Project #: IM - BLDG (4)

DUNCAN • WISNIEWSKI ARCHITECTURE ■
255 SOUTH CHAMPLAIN STREET, BURLINGTON, VERMONT 05401 802.864.6693

REGISTERED ARCHITECT MICHAEL WISNIEWSKI NO. 1202 STATE OF VERMONT

JANUARY 16, 2001

A7sb

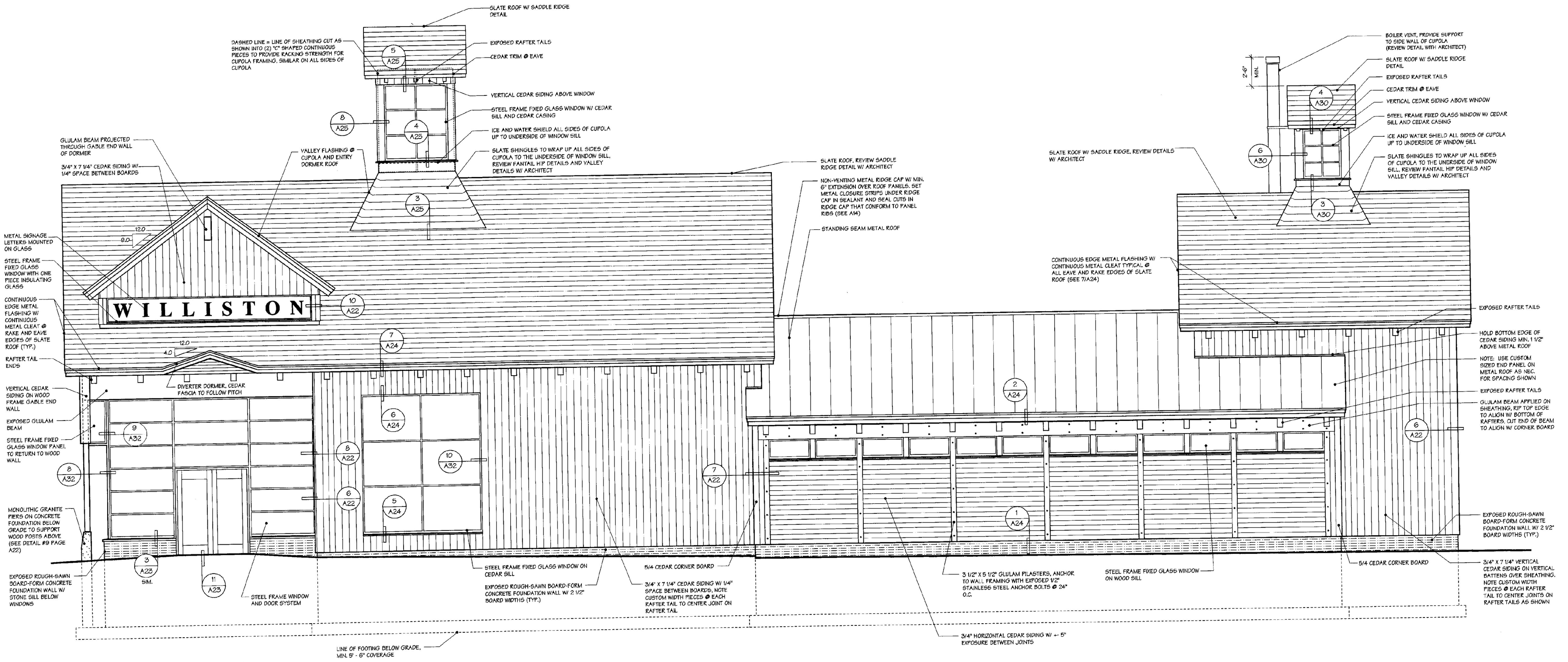

1 AUTO ENTRY ELEVATION

1/4" = 1' - 0"

WILLISTON INFORMATION CENTER I89 Southbound

Project #: IM - BLDG (4)

DUNCAN • WISNIEWSKI ARCHITECTURE ▪
255 SOUTH CHAMPLAIN STREET, BURLINGTON, VERMONT 05401 802.864.6693

REGISTERED ARCHITECT MICHAEL WISNIEWSKI No. 1202 STATE OF VERMONT

JANUARY 16, 2001

A8sb

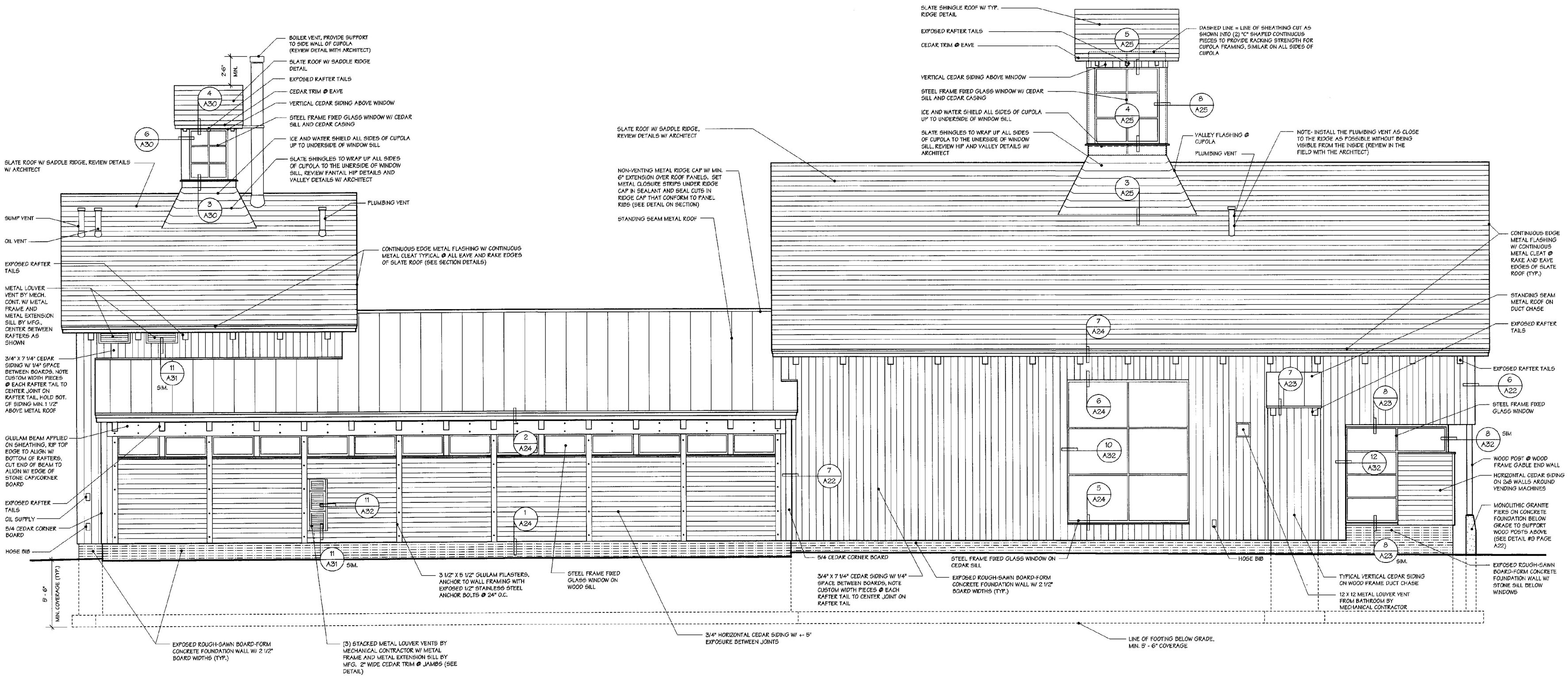

1 TRUCK ENTRY ELEVATION

1/4" = 1' - 0"

REGISTERED ARCHITECT MICHAEL WISNIEWSKI NO. 1262 STATE OF VERMONT

JANUARY 16, 2001

WILLISTON INFORMATION CENTER I89 Southbound

Project #: IM - BLDG (4)

DUNCAN • WISNIEWSKI ARCHITECTURE ■
255 SOUTH CHAMPLAIN STREET, BURLINGTON, VERMONT 05401 802.864.6693

A9sb

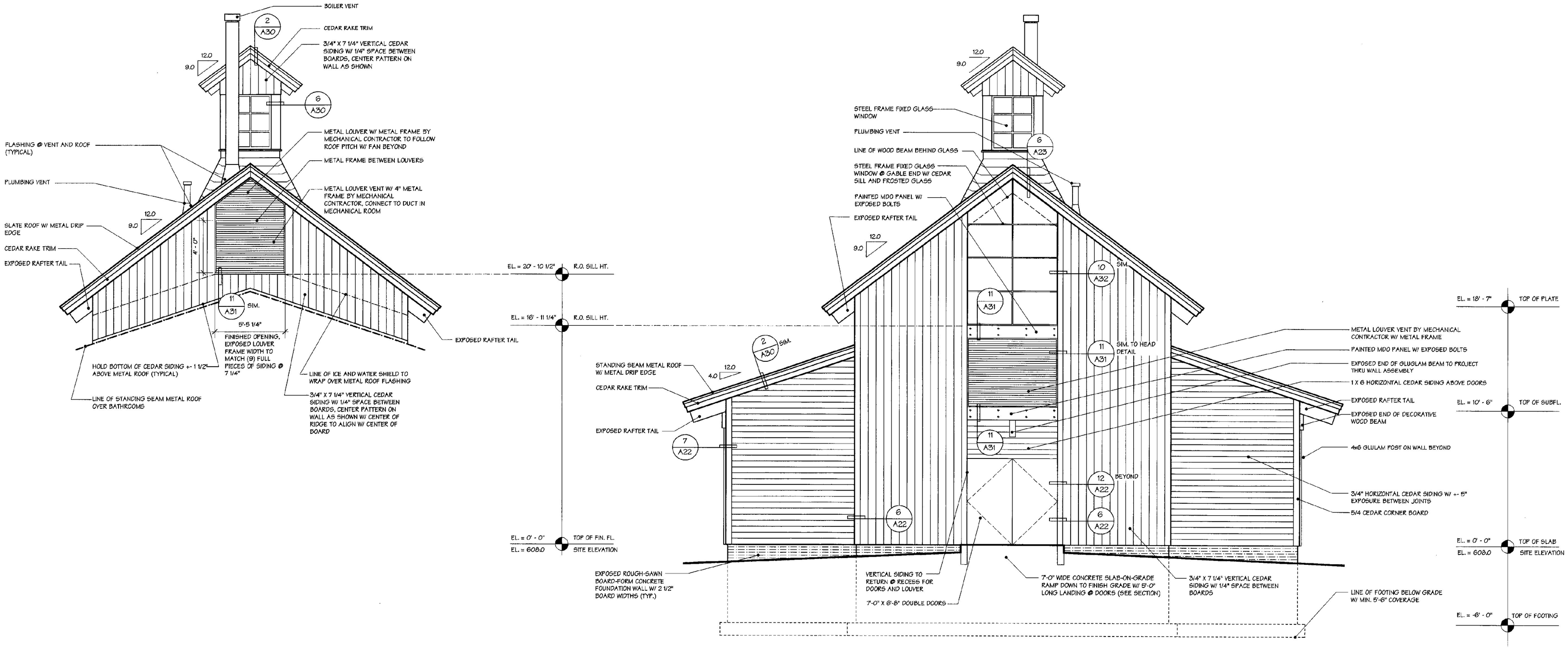

1 OPP. SERVICE ENTRY GABLE ELEV.
1/4" = 1' - 0"

2 SERVICE ENTRY GABLE ELEVATION
1/4" = 1' - 0"

WILLISTON INFORMATION CENTER I89 Southbound

Project #: IM - BLDG (4)

DUNCAN • WISNIEWSKI ARCHITECTURE ▪
255 SOUTH CHAMPLAIN STREET, BURLINGTON, VERMONT 05401 802.864.6693

REGISTERED ARCHITECT MICHAEL WISNIEWSKI No. 1205 STATE OF VERMONT

JANUARY 16, 2001

A10sb

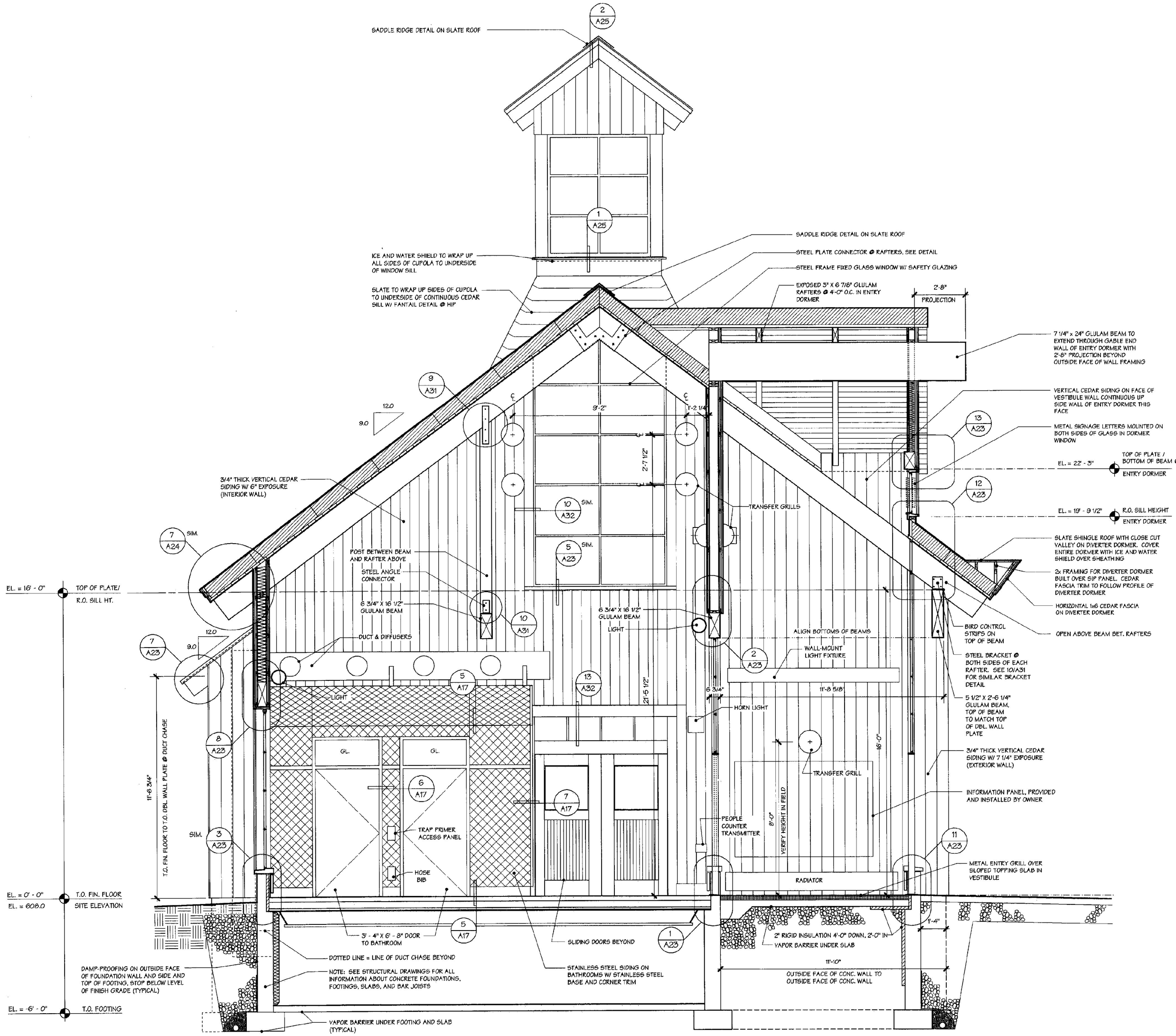

1 SECTION 1

3/8" = 1' - 0"

WILLISTON INFORMATION CENTER I89 Southbound

Project #: IM - BLDG (4)

DUNCAN • WISNIEWSKI ARCHITECTURE ▪
255 SOUTH CHAMPLAIN STREET, BURLINGTON, VERMONT 05401 802.864.6693

REGISTERED ARCHITECT MICHAEL WISNIEWSKI No. 1202 STATE OF VERMONT

JANUARY 16, 2001

A11sb

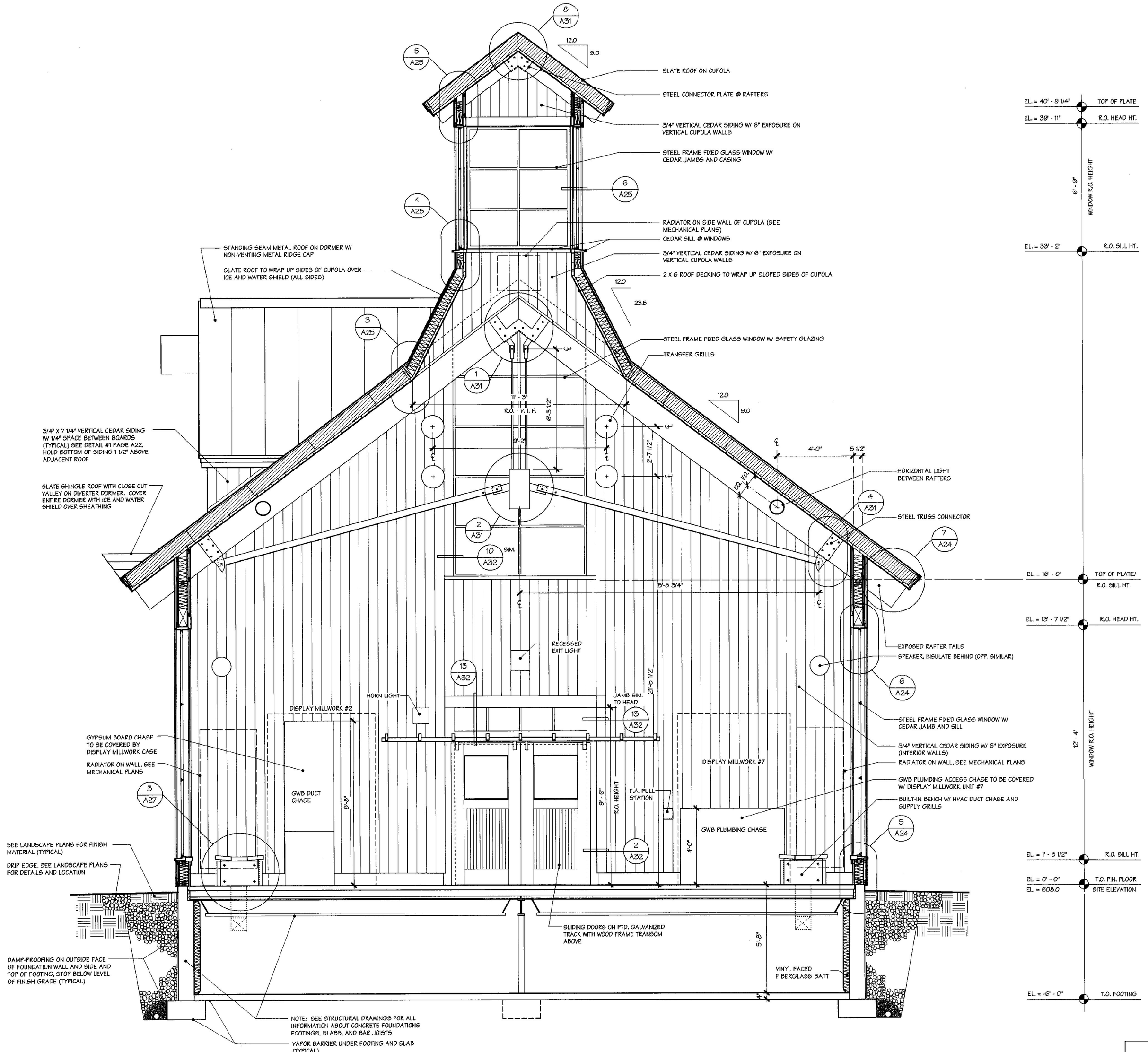

1 SECTION 2

3/8" = 1' - 0"

REGISTERED ARCHITECT MICHAEL WISNIEWSKI No. 1255 STATE OF VERMONT

JANUARY 16, 2001

WILLISTON INFORMATION CENTER I89 Southbound

Project #: IM - BLDG (4)

DUNCAN • WISNIEWSKI ARCHITECTURE ■
255 SOUTH CHAMPLAIN STREET, BURLINGTON, VERMONT 05401 802.864.6693

A12sb

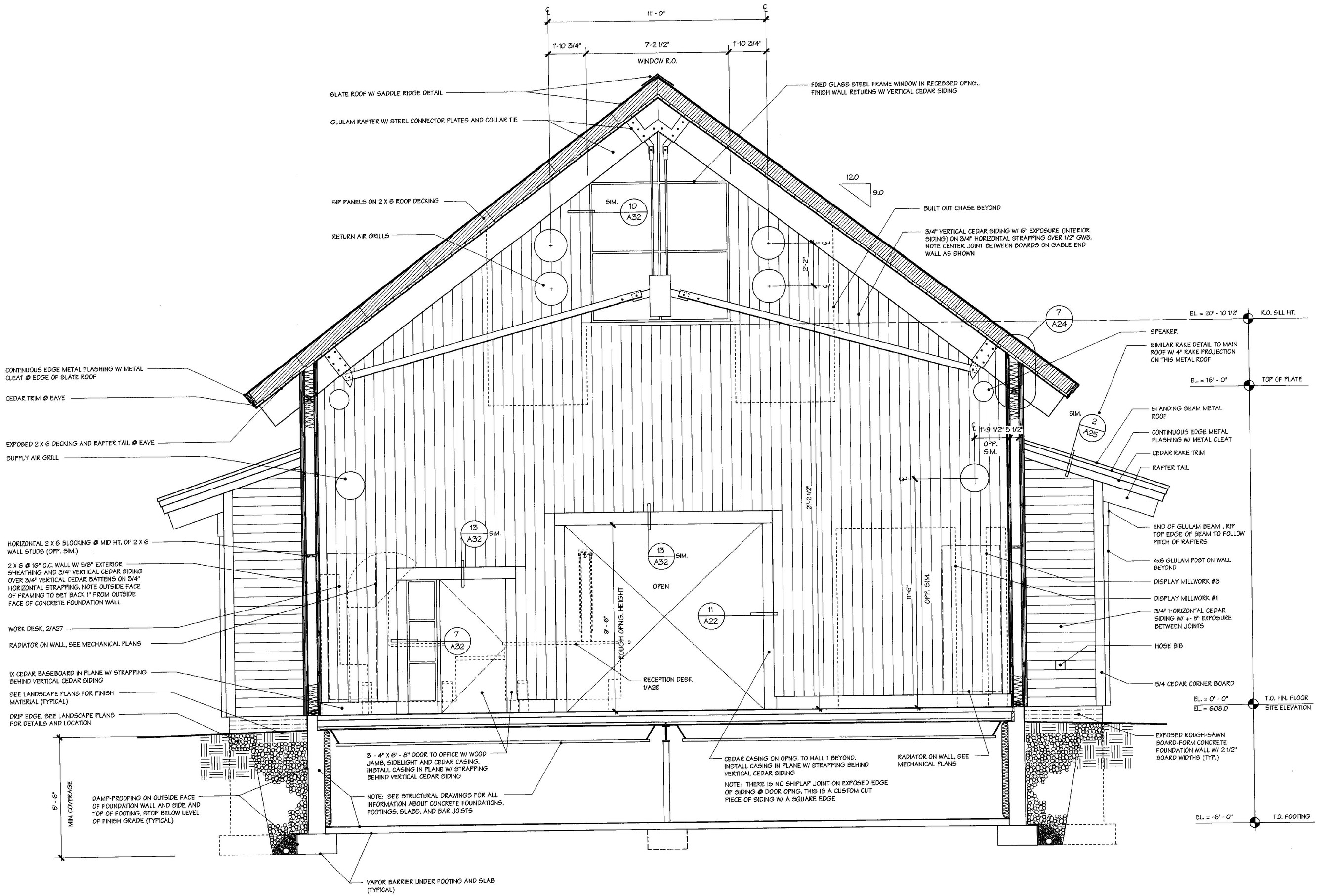

1 SECTION 3

3/8" = 1' - 0"

WILLISTON INFORMATION CENTER I89 Southbound

Project #: IM - BLDG (4)

DUNCAN • WISNIEWSKI ARCHITECTURE ▪
255 SOUTH CHAMPLAIN STREET, BURLINGTON, VERMONT 05401 802.864.6693

REGISTERED ARCHITECT MICHAEL WISNIEWSKI No. 1202 STATE OF VERMONT

JANUARY 16, 2001

A13sb

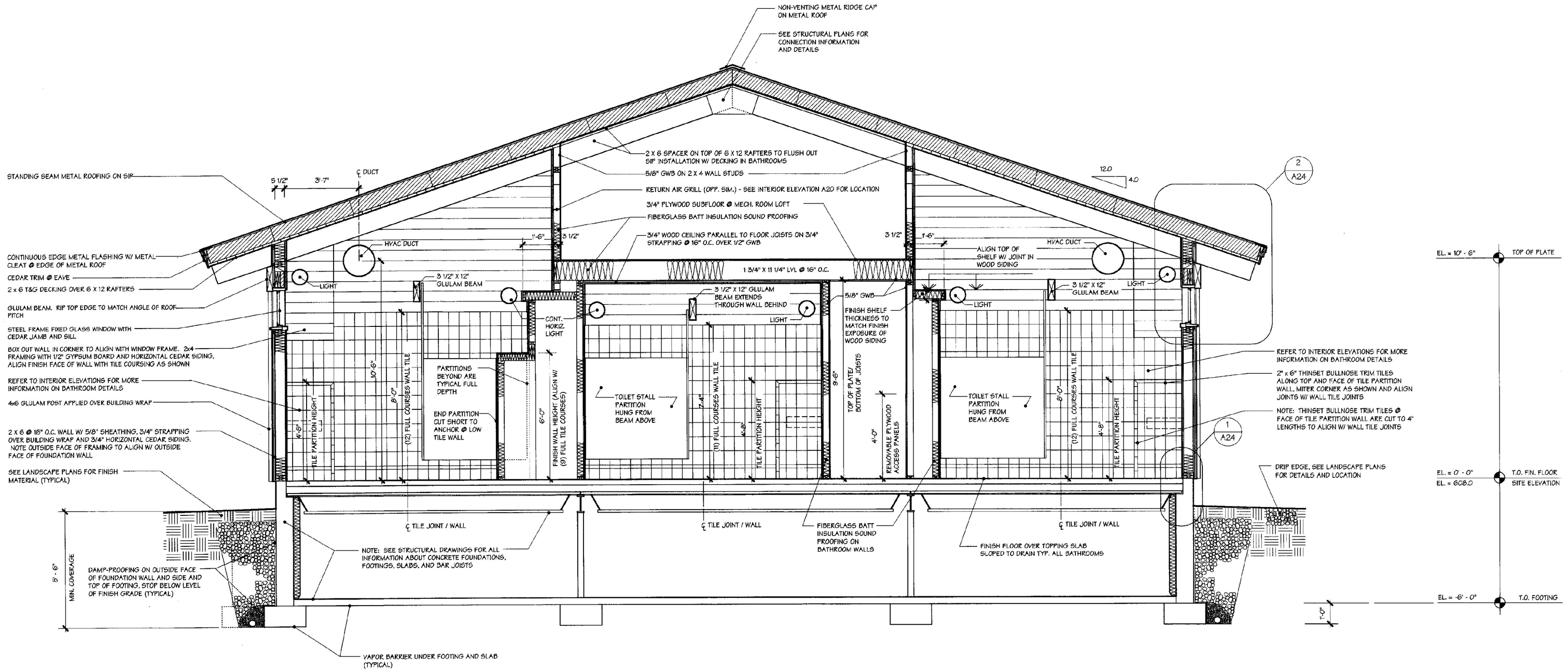

1 SECTION 4

3/8" = 1' - 0"

WILLISTON INFORMATION CENTER I89 Southbound

Project #: IM - BLDG (4)

DUNCAN • WISNIEWSKI ARCHITECTURE ■
255 SOUTH CHAMPLAIN STREET, BURLINGTON, VERMONT 05401 802.864.6693

REGISTERED ARCHITECT MICHAEL WISNIEWSKI No. 1202 STATE OF VERMONT

JANUARY 16, 2001

A14sb

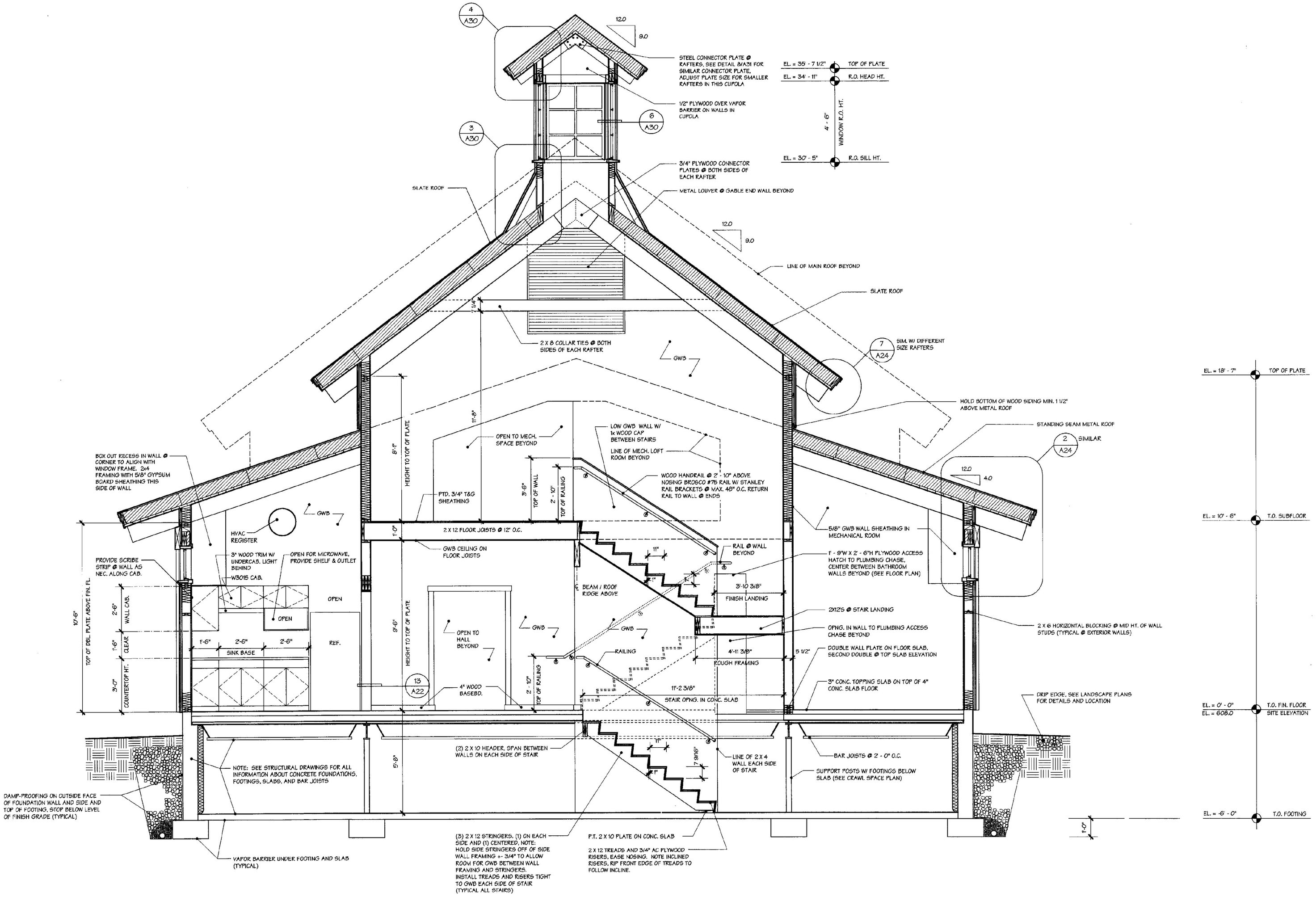

1 SECTION 5

3/8" = 1' - 0"

WILLISTON INFORMATION CENTER I89 Southbound

Project #: IM - BLDG (4)

DUNCAN • WISNIEWSKI ARCHITECTURE ▪
255 SOUTH CHAMPLAIN STREET, BURLINGTON, VERMONT 05401 802.864.6693

REGISTERED ARCHITECT MICHAEL WISNIEWSKI No. 1202 STATE OF VERMONT

JANUARY 16, 2001

A15sb

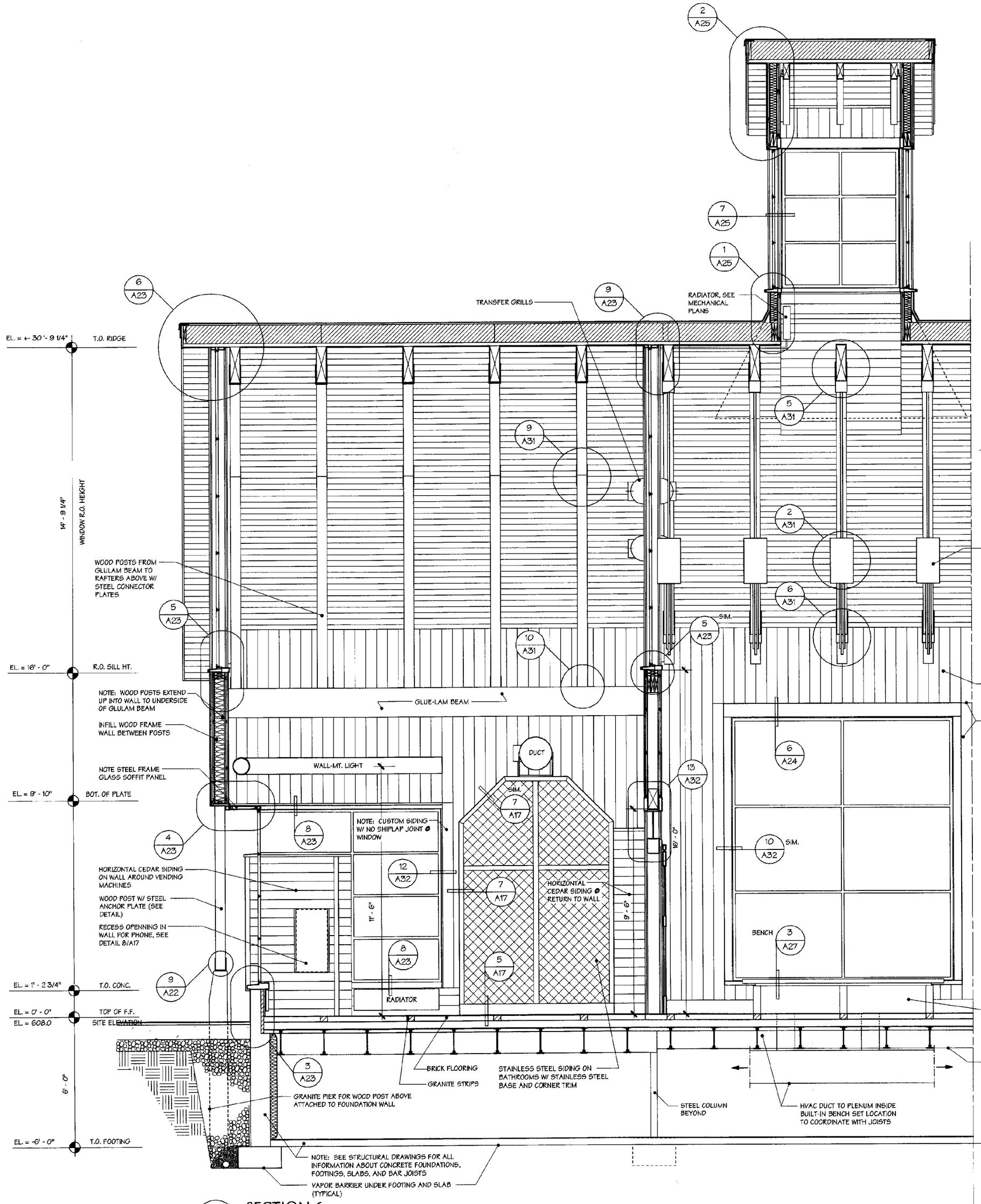

1 SECTION 6

3/8" = 1' - 0"

REGISTERED ARCHITECT MICHAEL WISNIEWSKI No. 1202 STATE OF VERMONT

WILLISTON INFORMATION CENTER I89 Southbound

Project #: IM - BLDG (4)

DUNCAN • WISNIEWSKI ARCHITECTURE ▪
255 SOUTH CHAMPLAIN STREET, BURLINGTON, VERMONT 05401 802.864.6693

JANUARY 16, 2001

A16sb

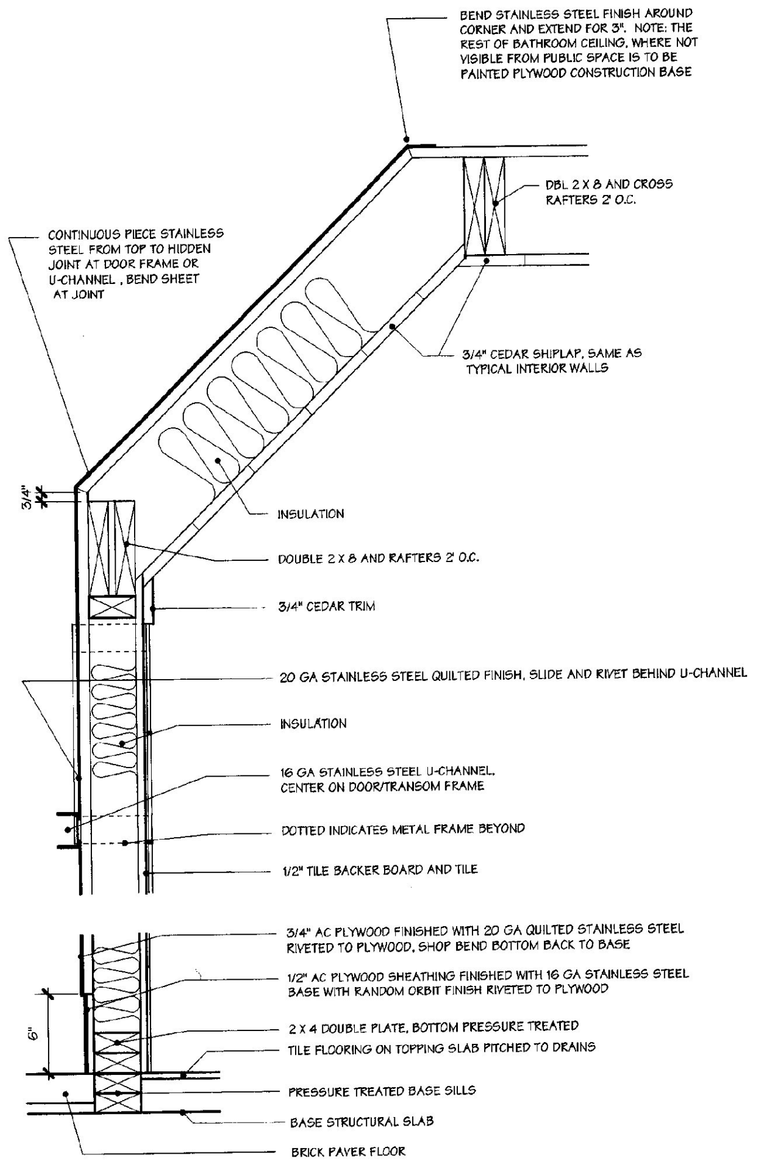

5 WALL SECTION @ ENTRY W.C.
1 1/2" = 1' - 0"

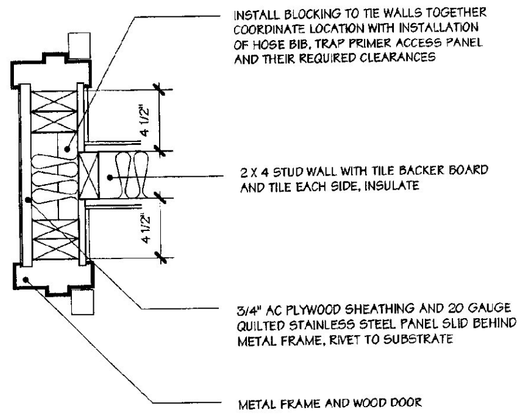

6 PLAN DETAIL @ DOORS
1 1/2" = 1' - 0"

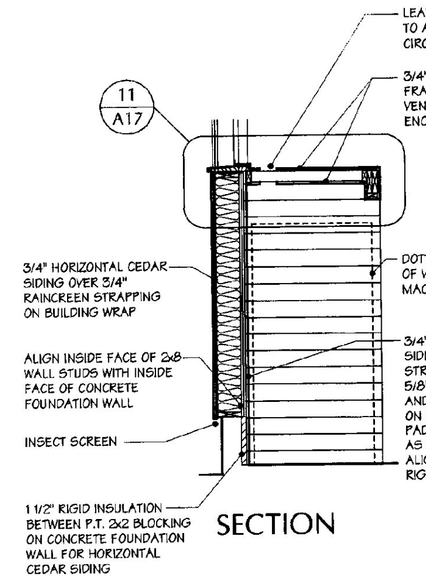

SECTION

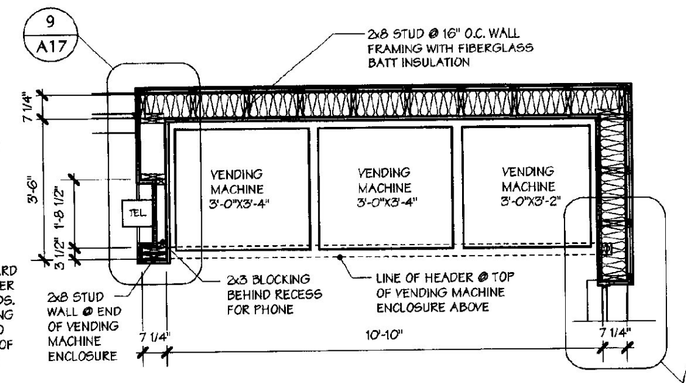

PLAN

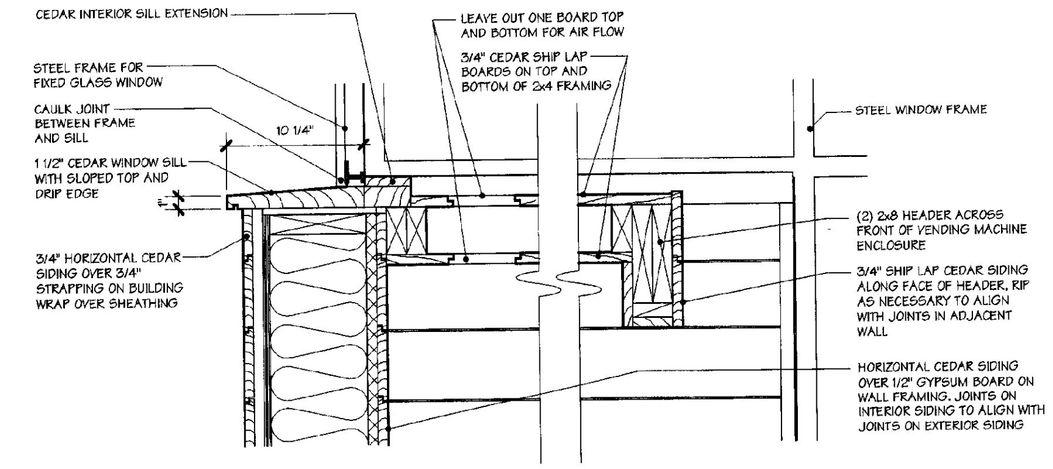

11 SECTION DETAIL
1 1/2" = 1' - 0"

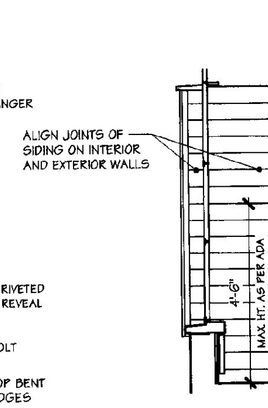

SIDE ELEVATION

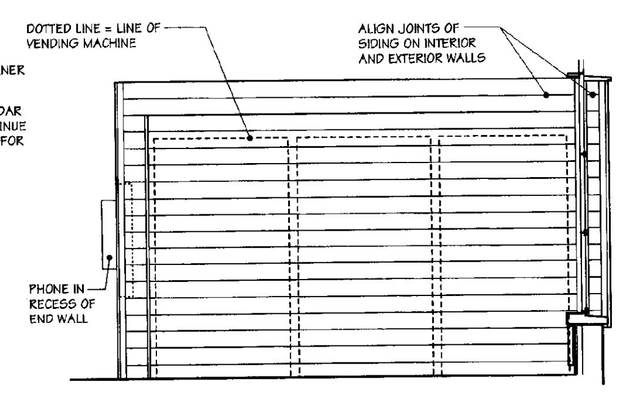

FRONT ELEVATION

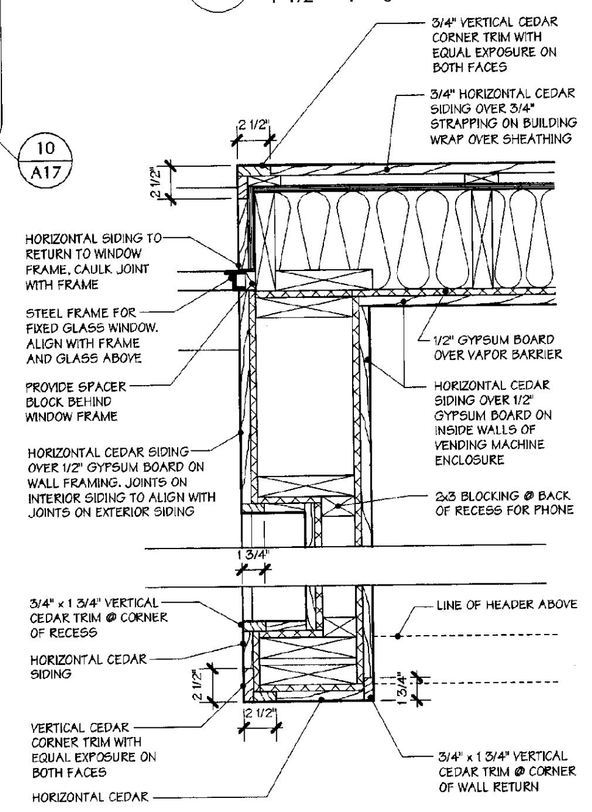

9 PLAN DETAIL
1 1/2" = 1' - 0"

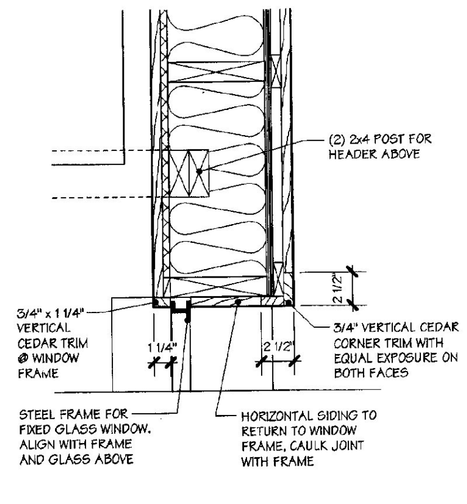

10 PLAN DETAIL
1 1/2" = 1' - 0"

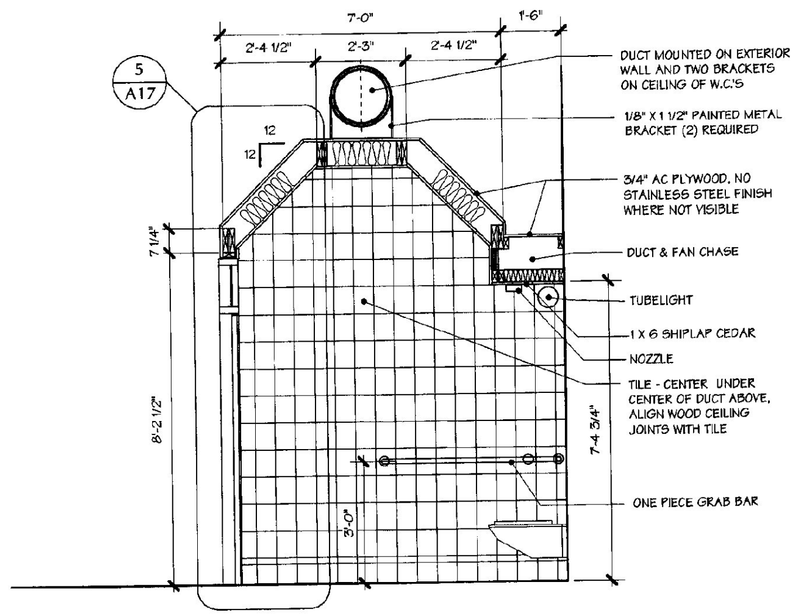

1 W.C. SECTION LOOKING @ INT WALL
3/8" = 1' - 0"
WC2 Opposite View

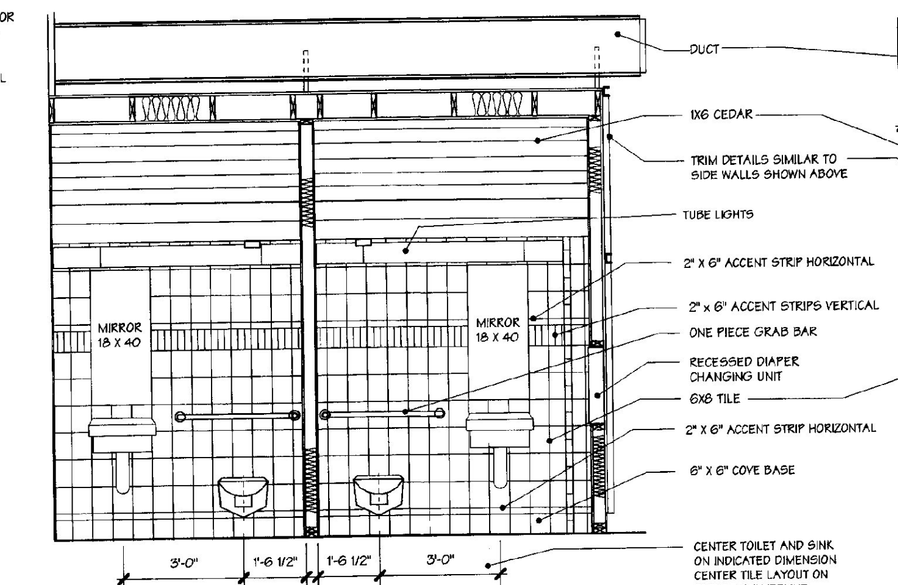

2 SECTION LOOKING TO REAR
3/8" = 1' - 0"

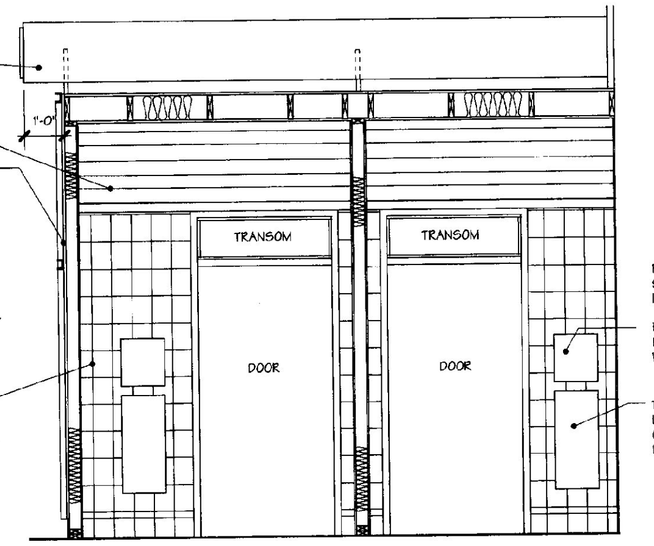

3 SECTION LOOKING @ DOORS
3/8" = 1' - 0"

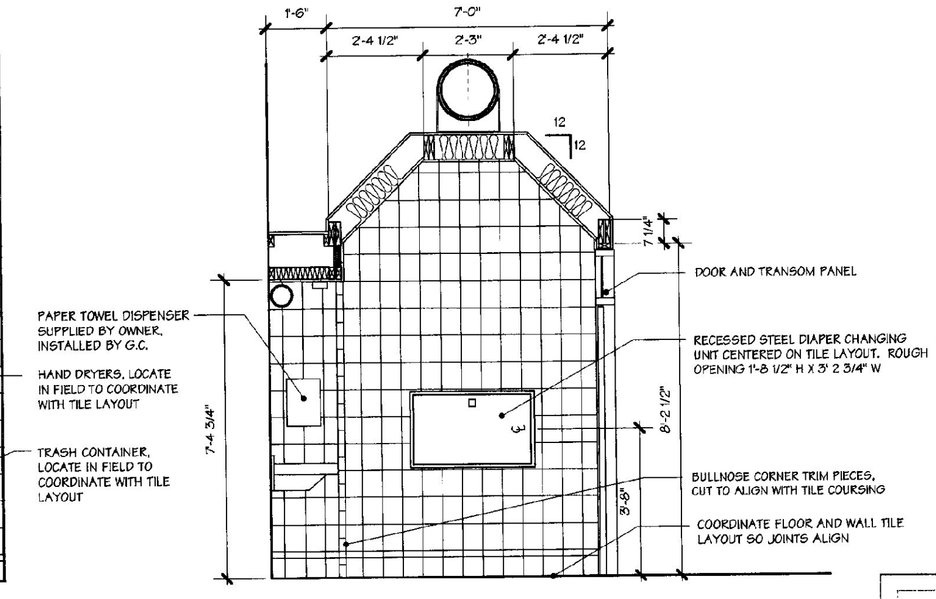

4 SECTION LOOKING @ EXT WALL
3/8" = 1' - 0"
WC2 Opposite View

WILLISTON INFORMATION CENTER I89 Southbound

Project #: IM - BLDG (4)

DUNCAN • WISNIEWSKI ARCHITECTURE ■
255 SOUTH CHAMPLAIN STREET, BURLINGTON, VERMONT 05401 802.864.6693

REGISTERED ARCHITECT MICHAEL WISNIEWSKI No. 1202 STATE OF VERMONT

JANUARY 16, 2001

A17sb

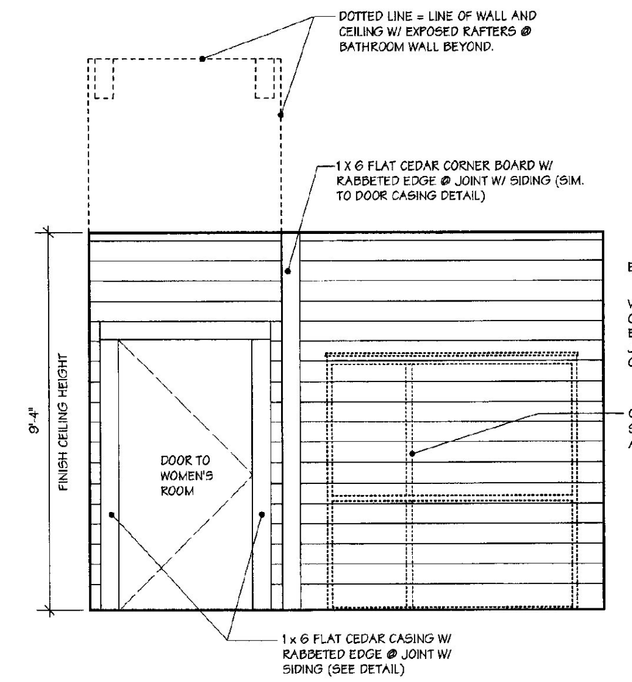

3 HALL 1

3/8" = 1' - 0"

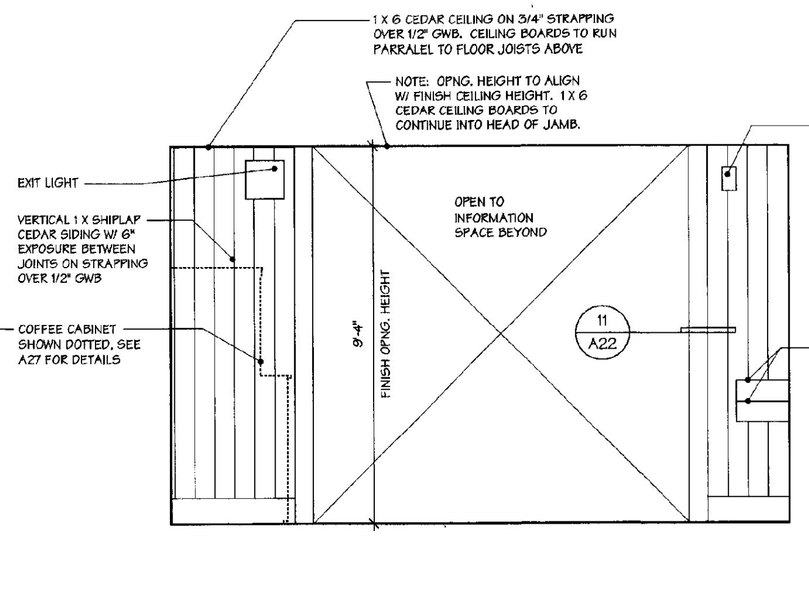

4 HALL 1

3/8" = 1' - 0"

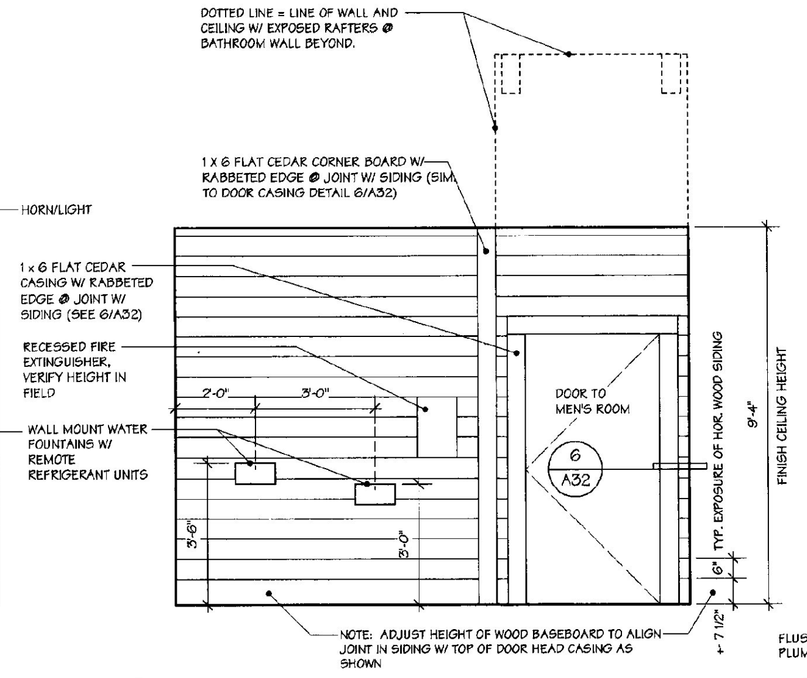

5 HALL 1

3/8" = 1' - 0"

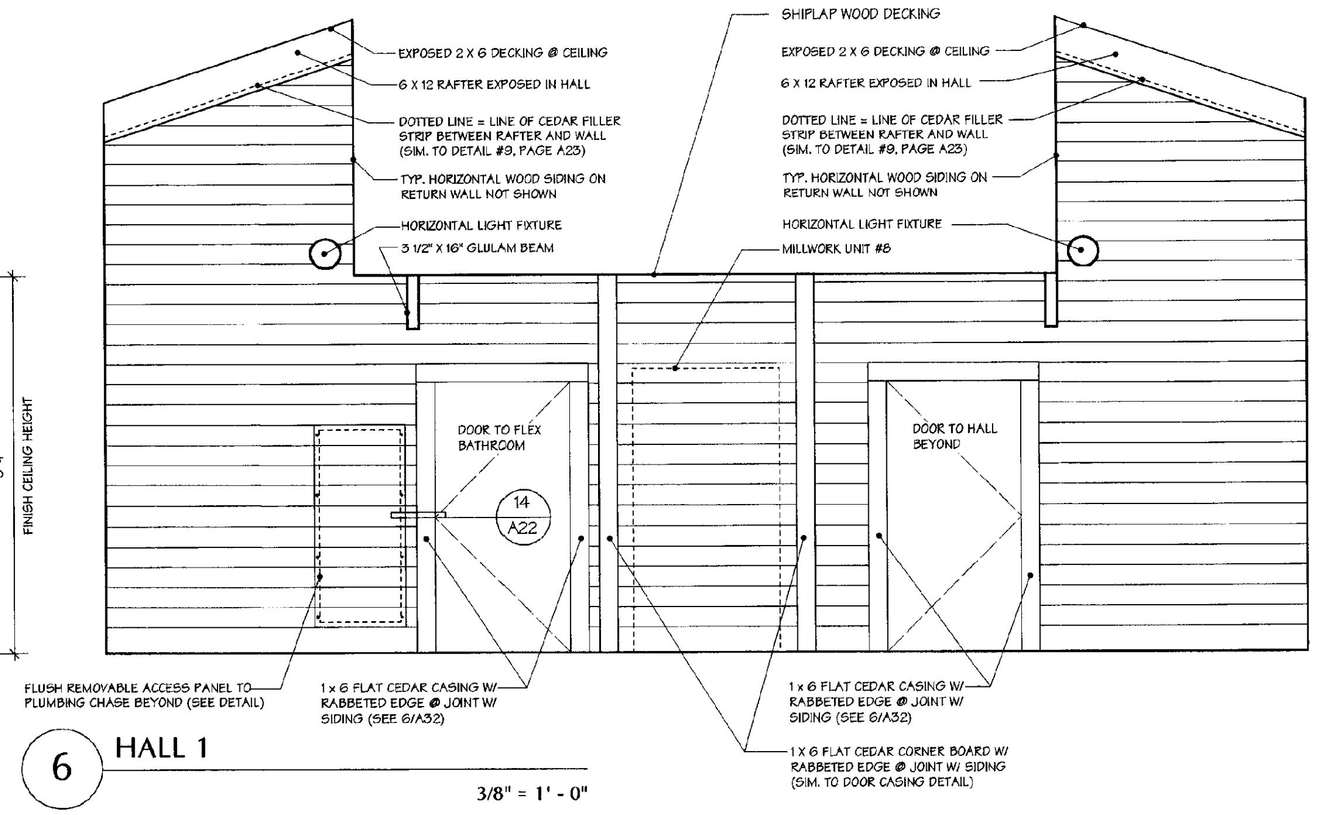

6 HALL 1

3/8" = 1' - 0"

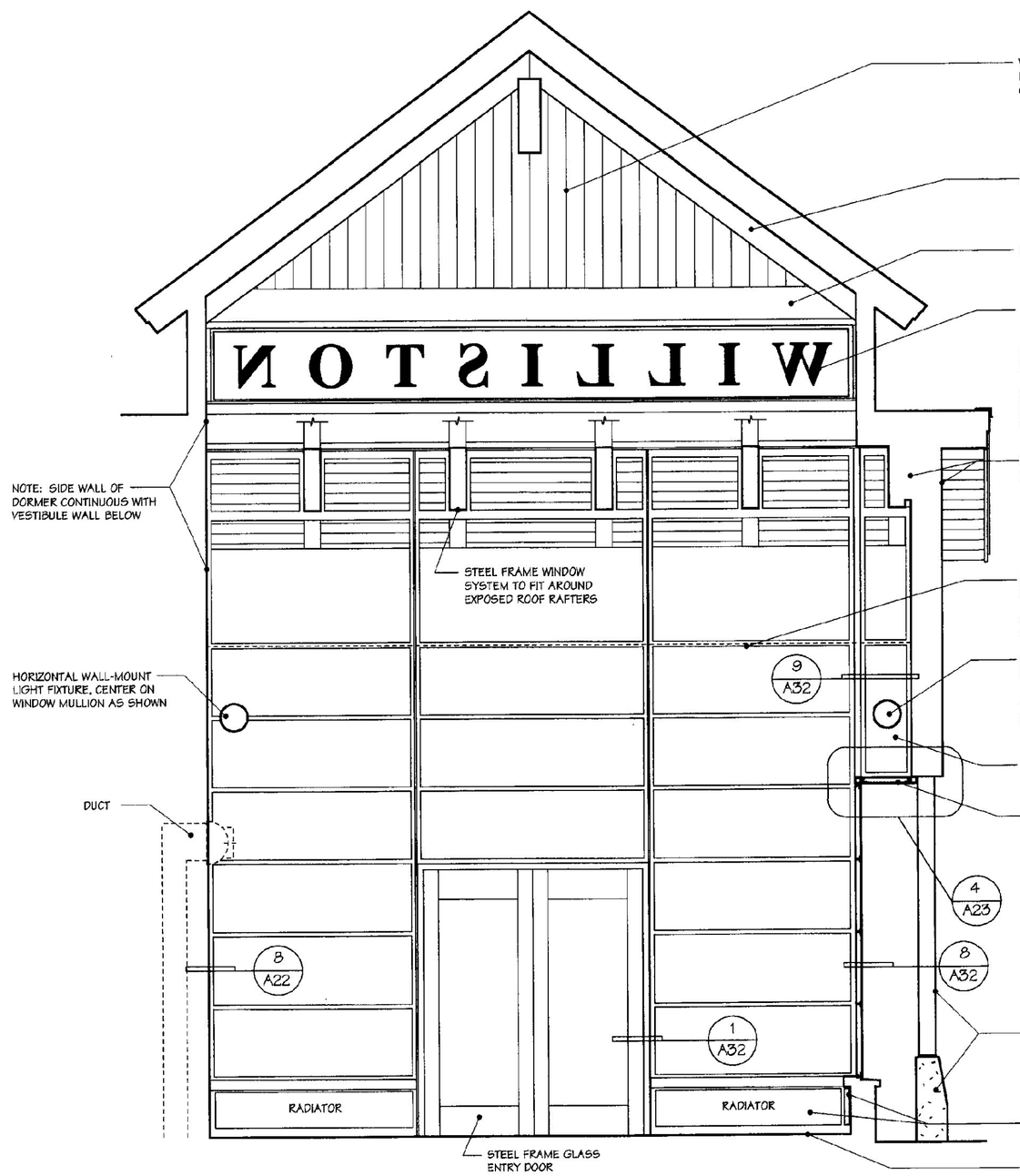

1 FRONT VESTIBULE

3/8" = 1' - 0"

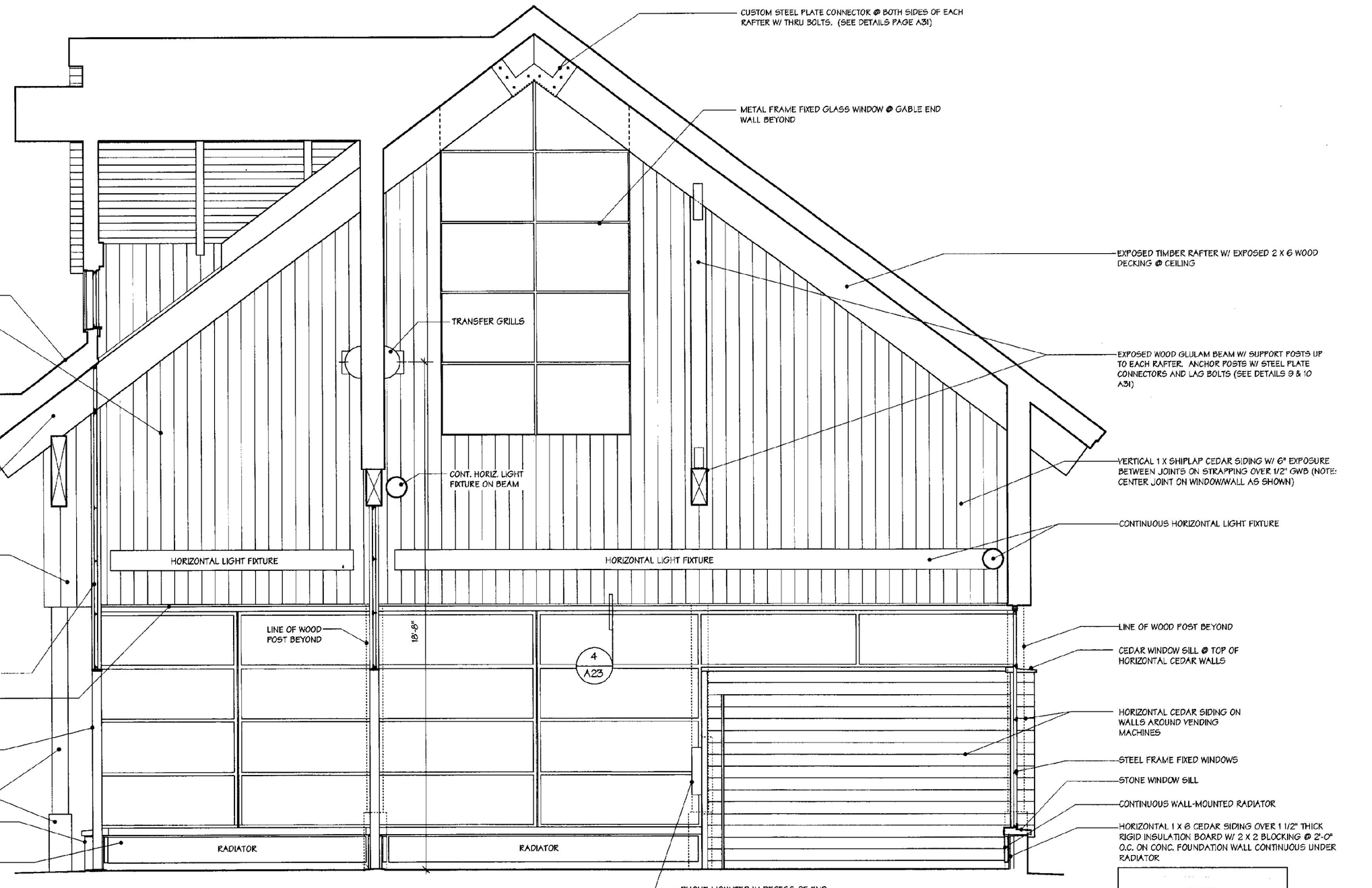

2 FRONT ENTRY

3/8" = 1' - 0"

REGISTERED ARCHITECT MICHAEL WISNIEWSKI No. 1202 STATE OF VERMONT

WILLISTON INFORMATION CENTER I89 Southbound

Project #: IM - BLDG (4)

DUNCAN • WISNIEWSKI ARCHITECTURE ▪
255 SOUTH CHAMPLAIN STREET, BURLINGTON, VERMONT 05401 802.864.6693

JANUARY 16, 2001

A18sb

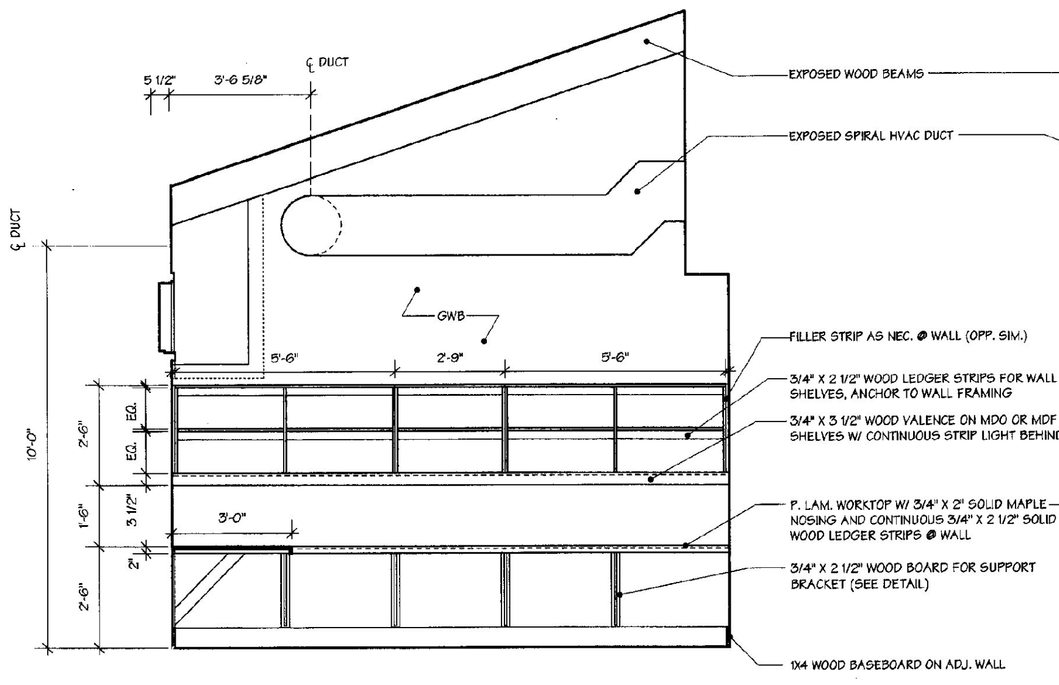

5 STAFF OFFICE

3/8" = 1' - 0"

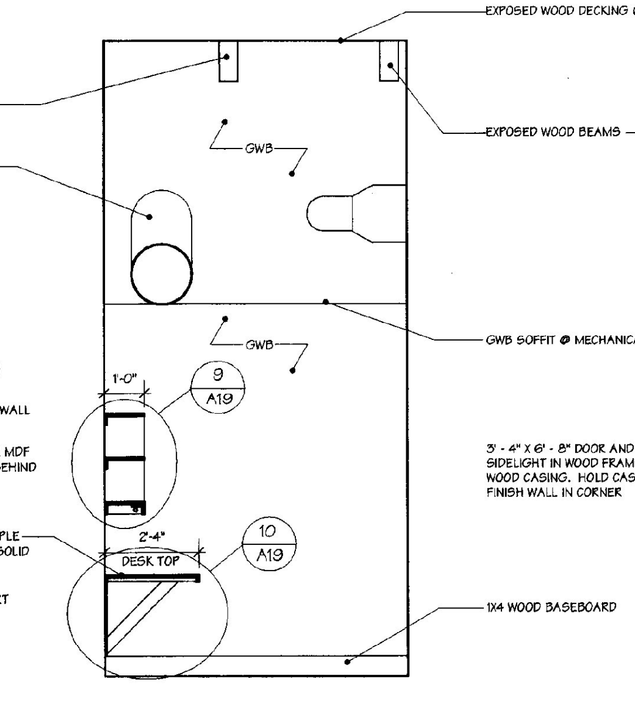

6 STAFF OFFICE

3/8" = 1' - 0"

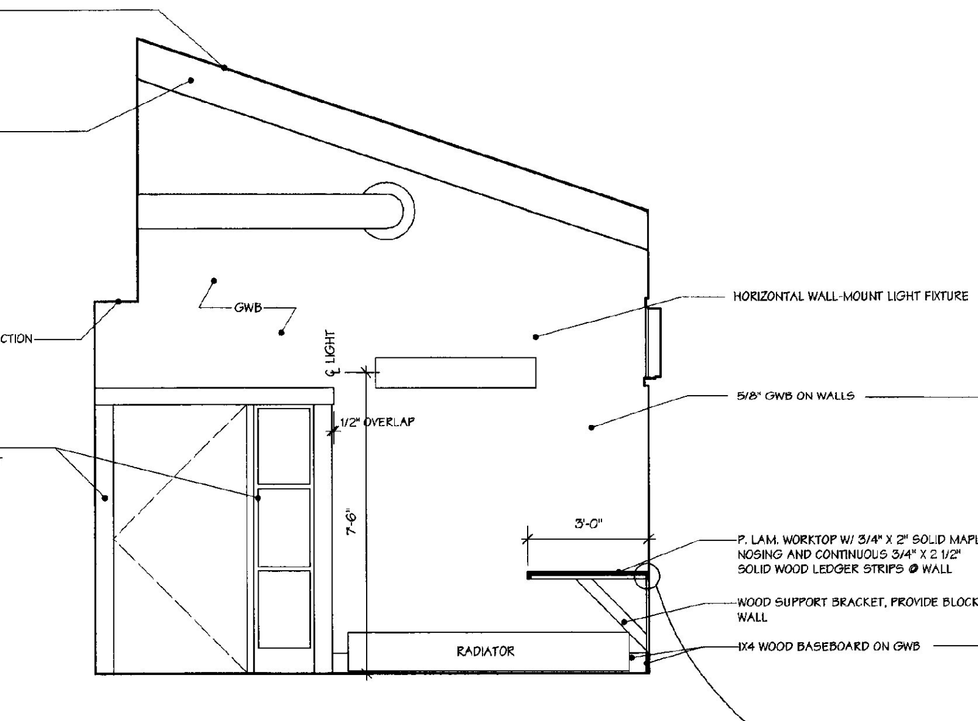

7 STAFF OFFICE

3/8" = 1' - 0"

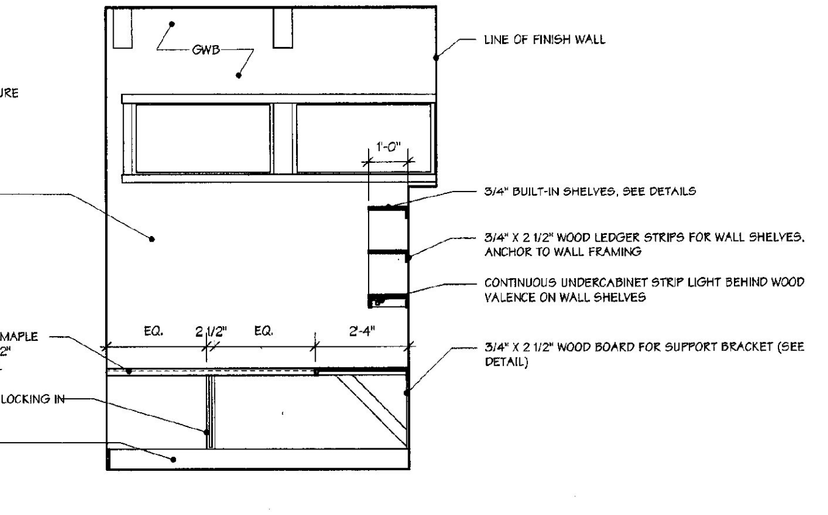

8 STAFF OFFICE

3/8" = 1' - 0"

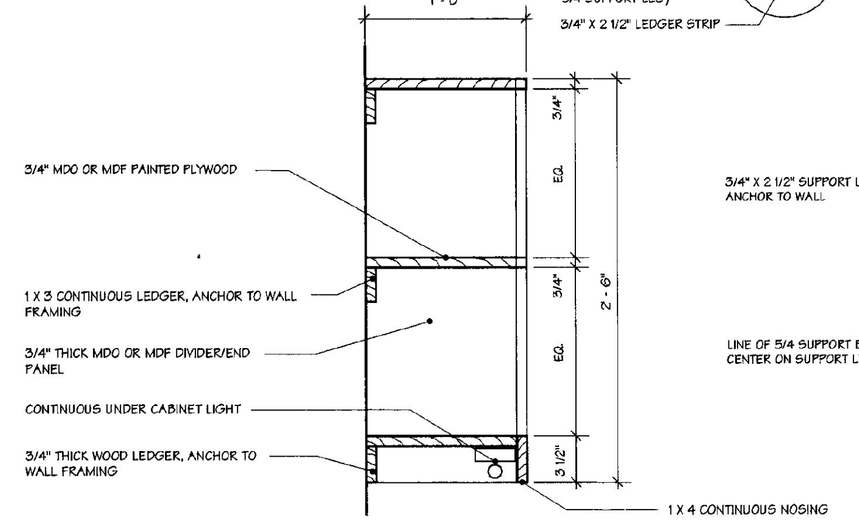

9 SHELF DETAIL

1 1/2" = 1' - 0"

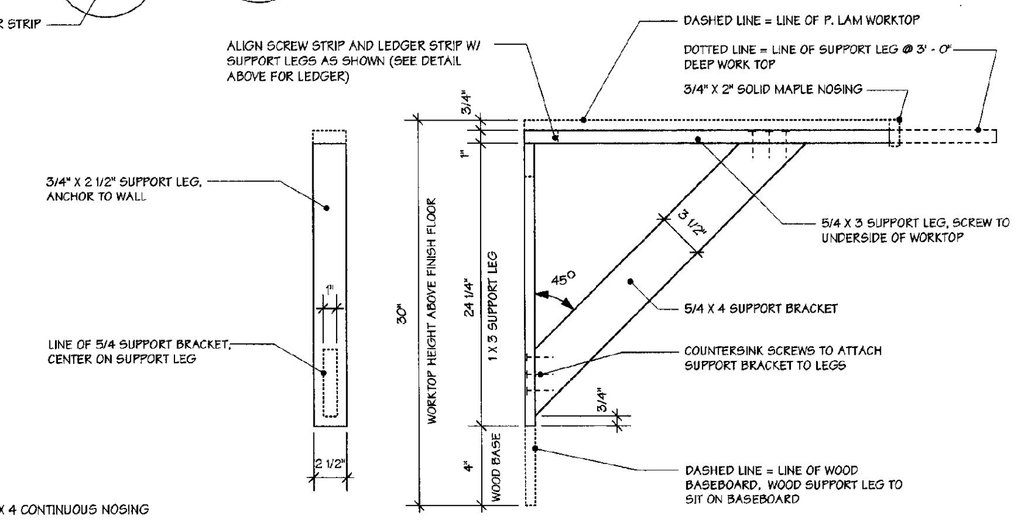

10 BRACKET DETAIL

1 1/2" = 1' - 0"

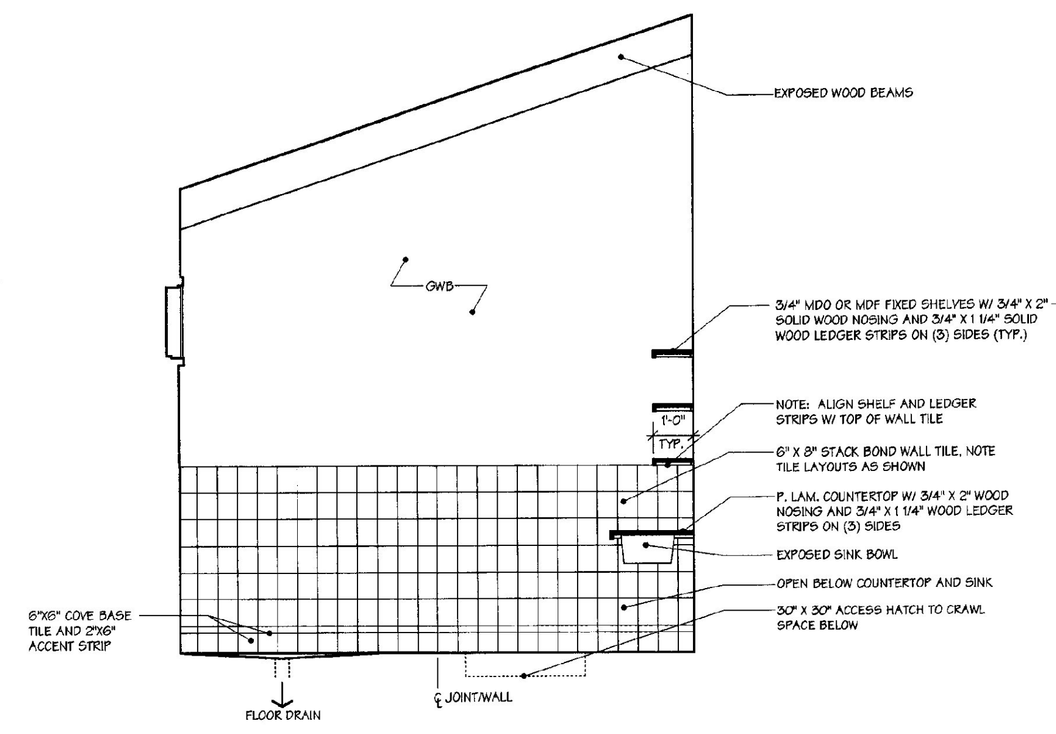

1 JANITOR

3/8" = 1' - 0"

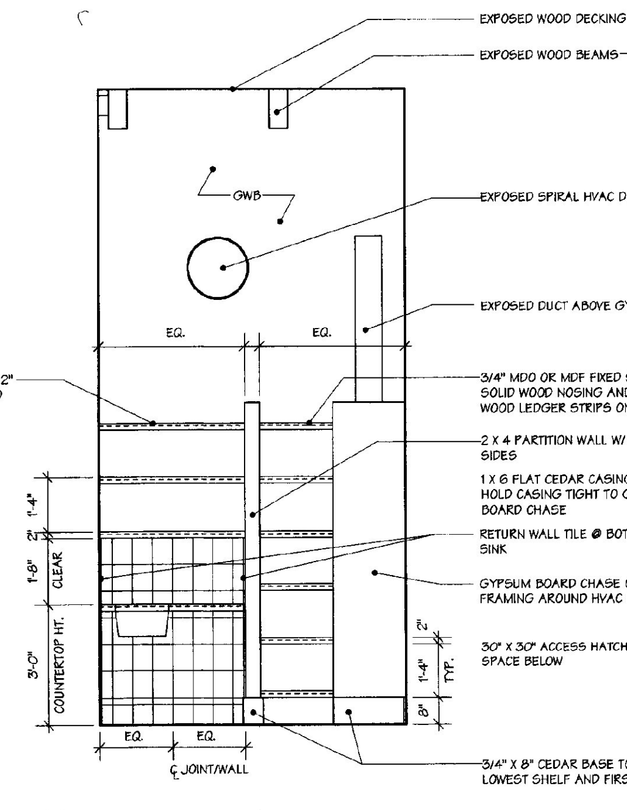

2 JANITOR

3/8" = 1' - 0"

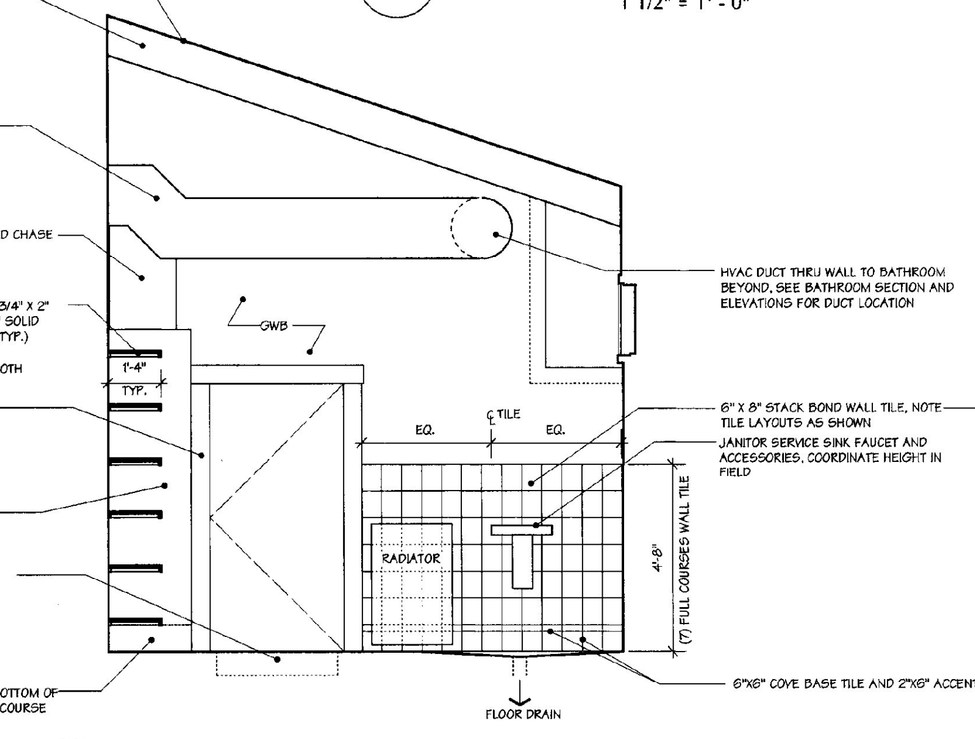

3 JANITOR

3/8" = 1' - 0"

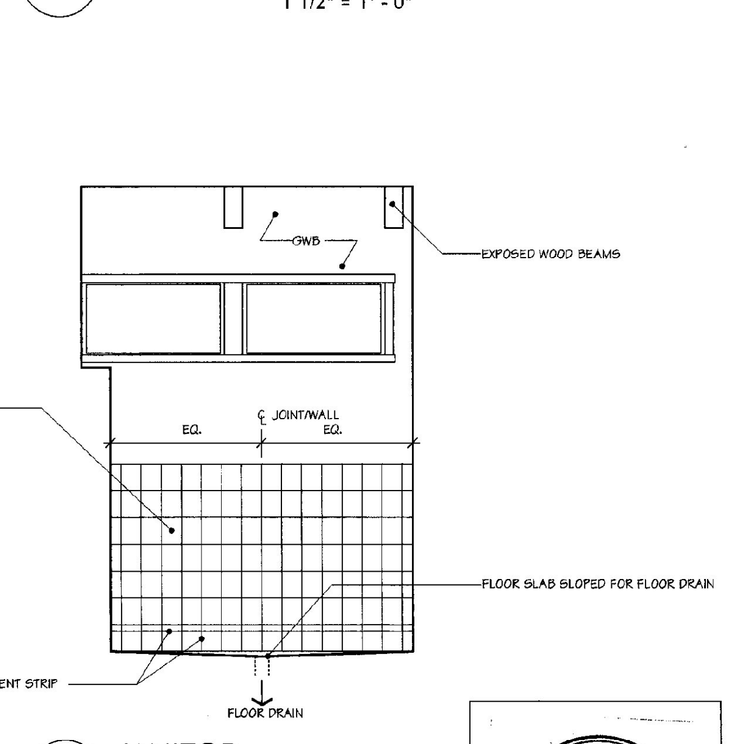

4 JANITOR

3/8" = 1' - 0"

REGISTERED ARCHITECT MICHAEL WISNIEWSKI No. 1203 STATE OF VERMONT

JANUARY 16, 2001

WILLISTON INFORMATION CENTER I89 Southbound

Project #: IM - BLDG (4)

DUNCAN • WISNIEWSKI ARCHITECTURE ▪
255 SOUTH CHAMPLAIN STREET, BURLINGTON, VERMONT 05401 802.864.6693

A19sb

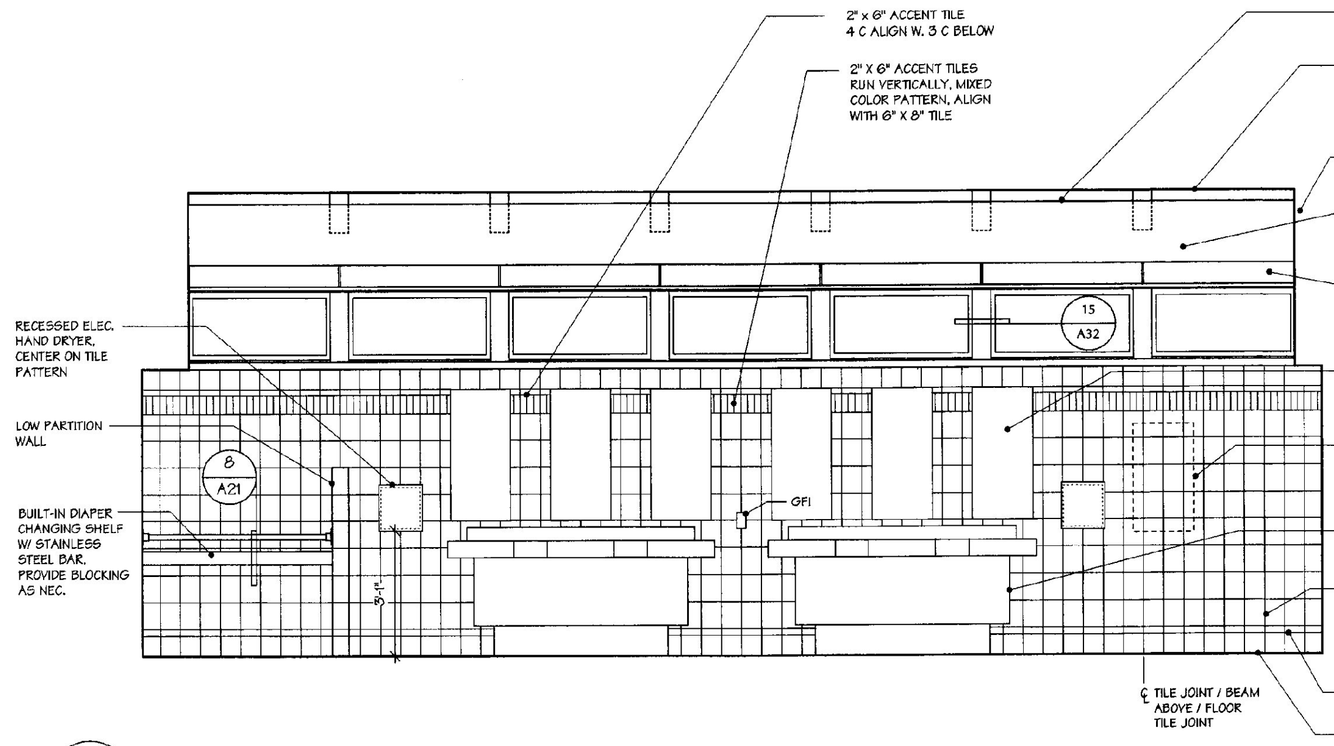

8 WOMEN'S BATHROOM

3/8" = 1' - 0"

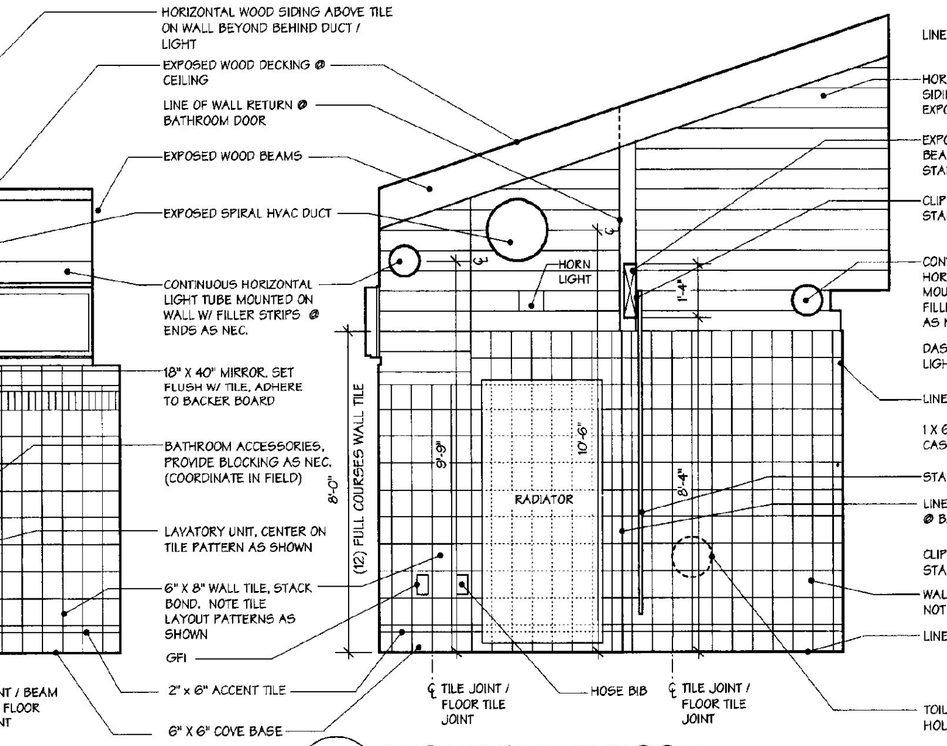

9 WOMEN'S BATHROOM

3/8" = 1' - 0"

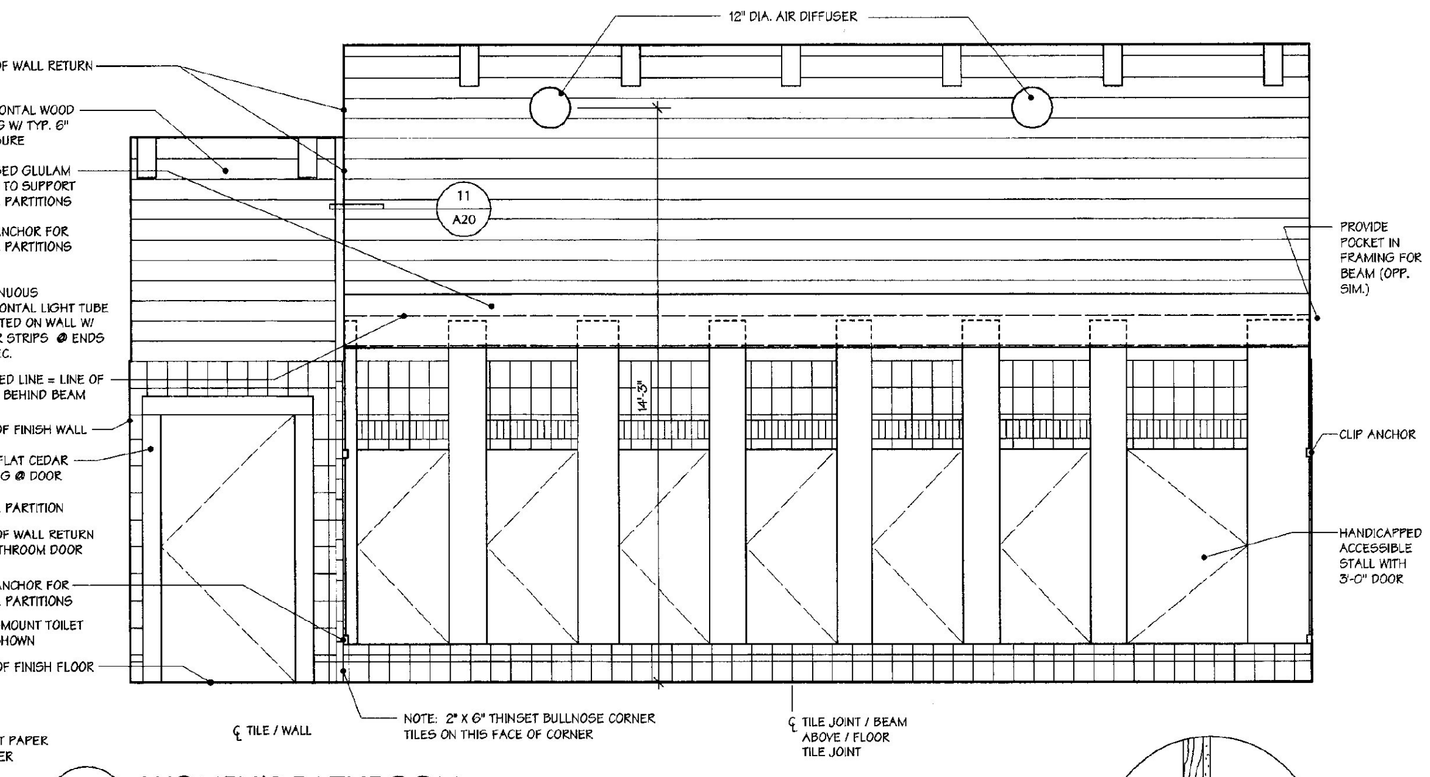

10 WOMEN'S BATHROOM

3/8" = 1' - 0"

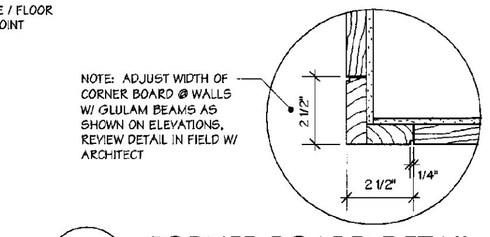

11 CORNER BOARD DETAIL

N.T.S.

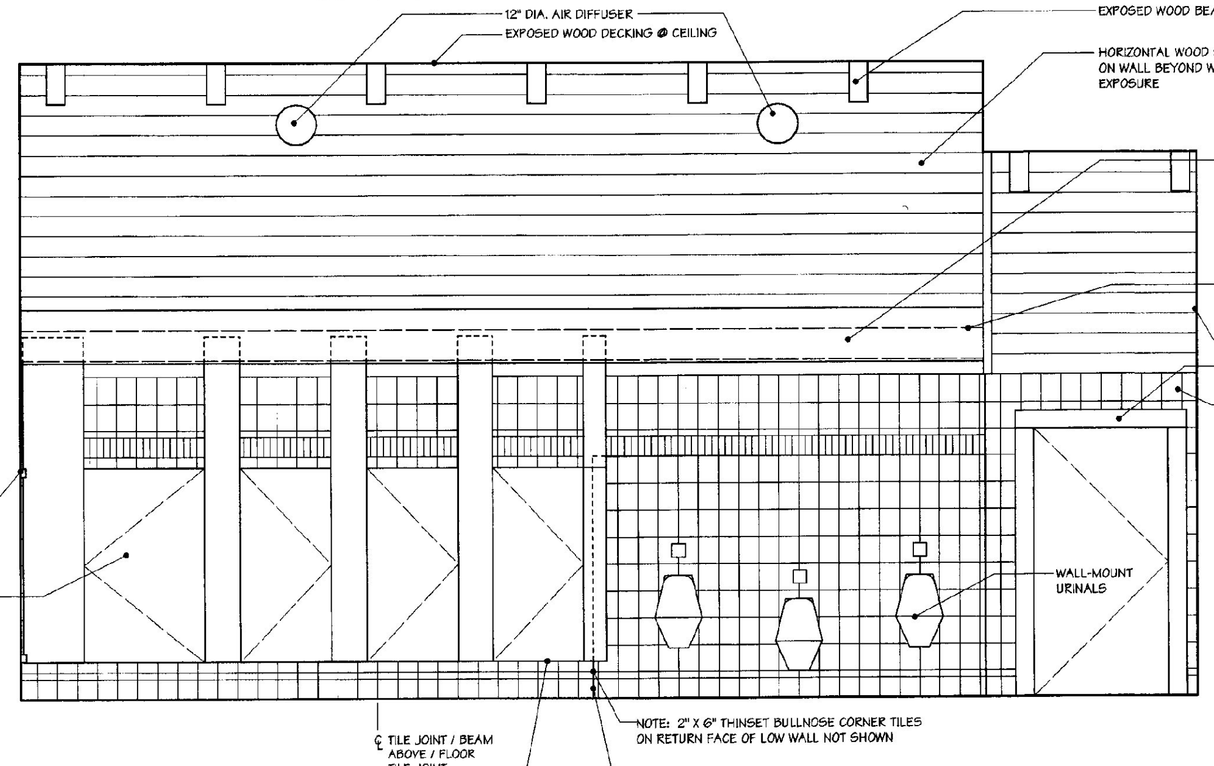

5 MEN'S BATHROOM

3/8" = 1' - 0"

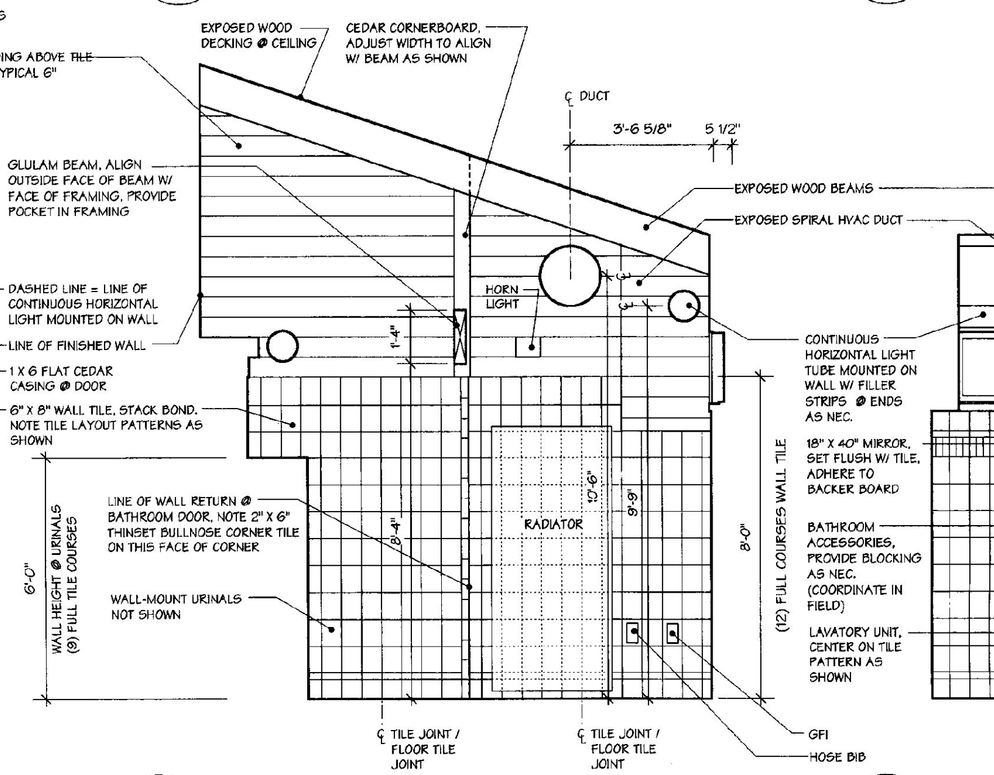

6 MEN'S BATHROOM

3/8" = 1' - 0"

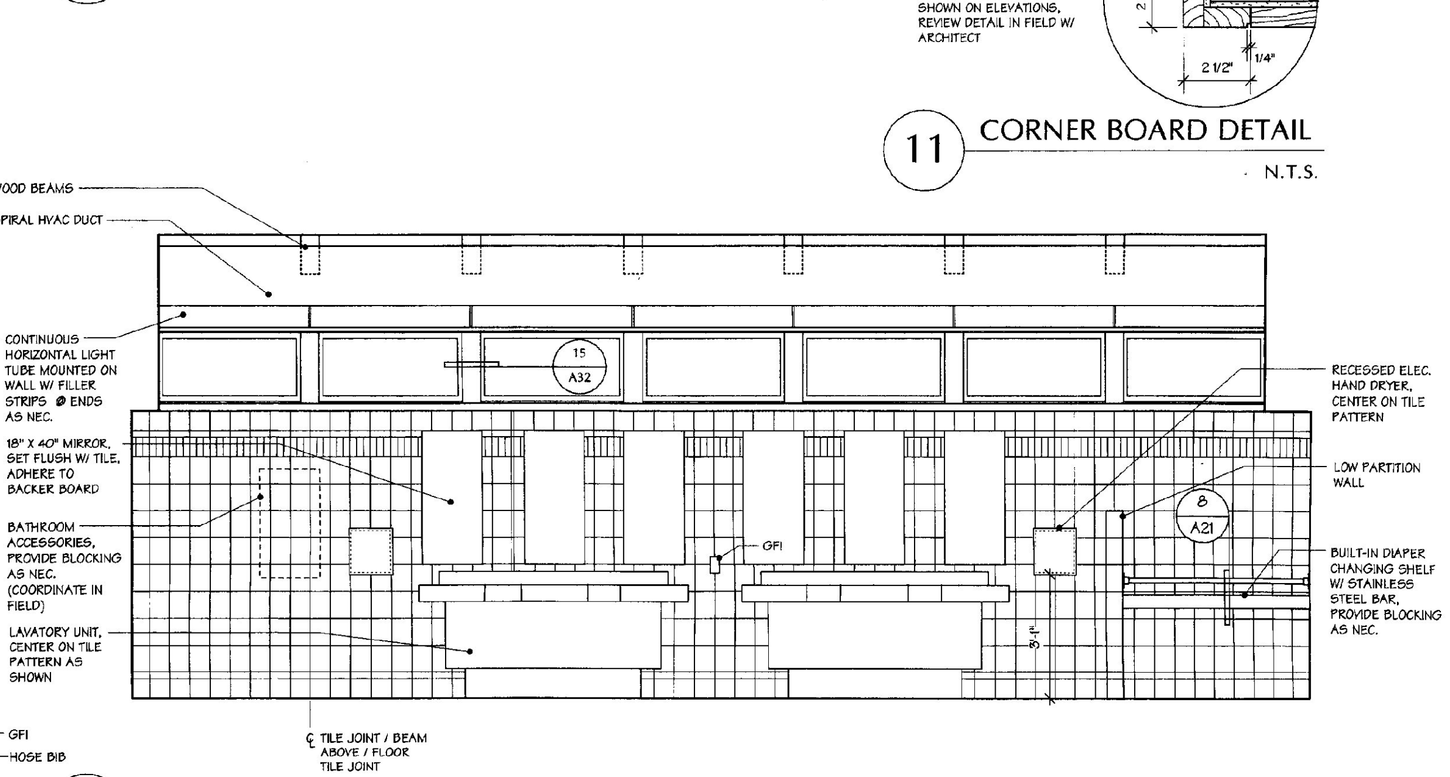

7 MEN'S BATHROOM

3/8" = 1' - 0"

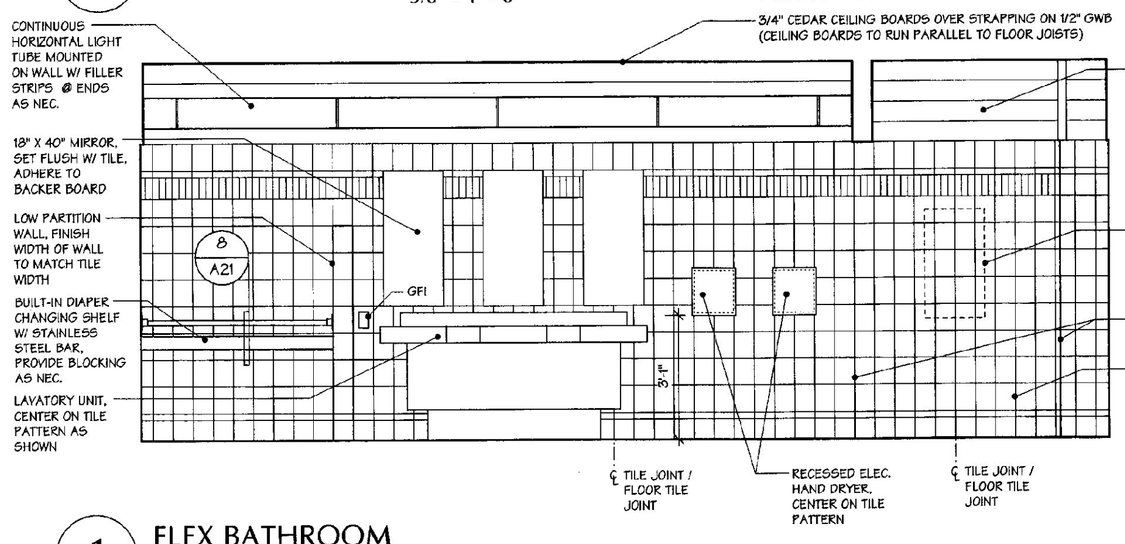

1 FLEX BATHROOM

3/8" = 1' - 0"

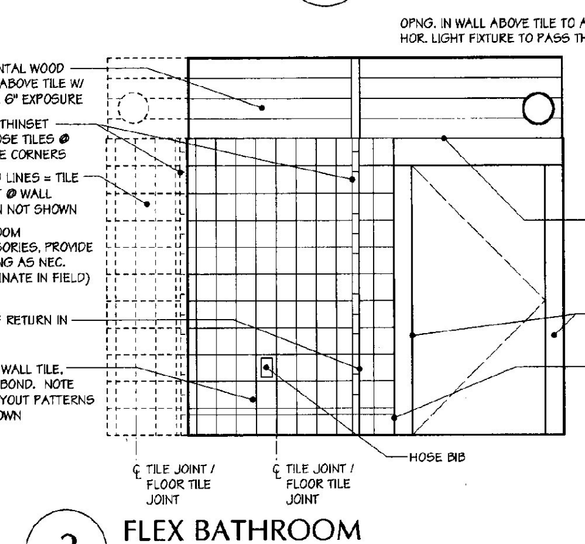

2 FLEX BATHROOM

3/8" = 1' - 0"

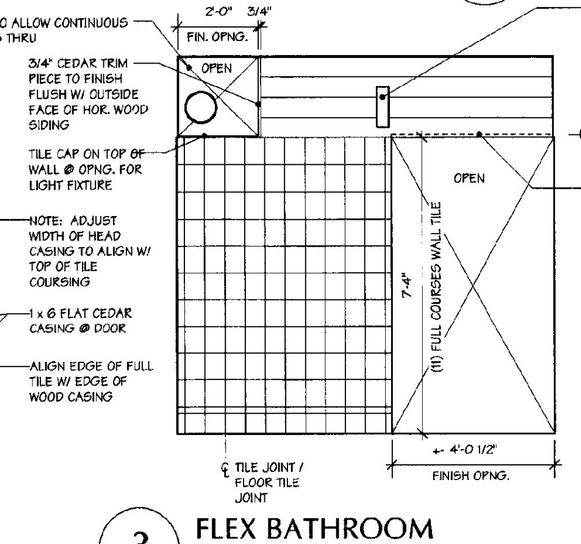

3 FLEX BATHROOM

3/8" = 1' - 0"

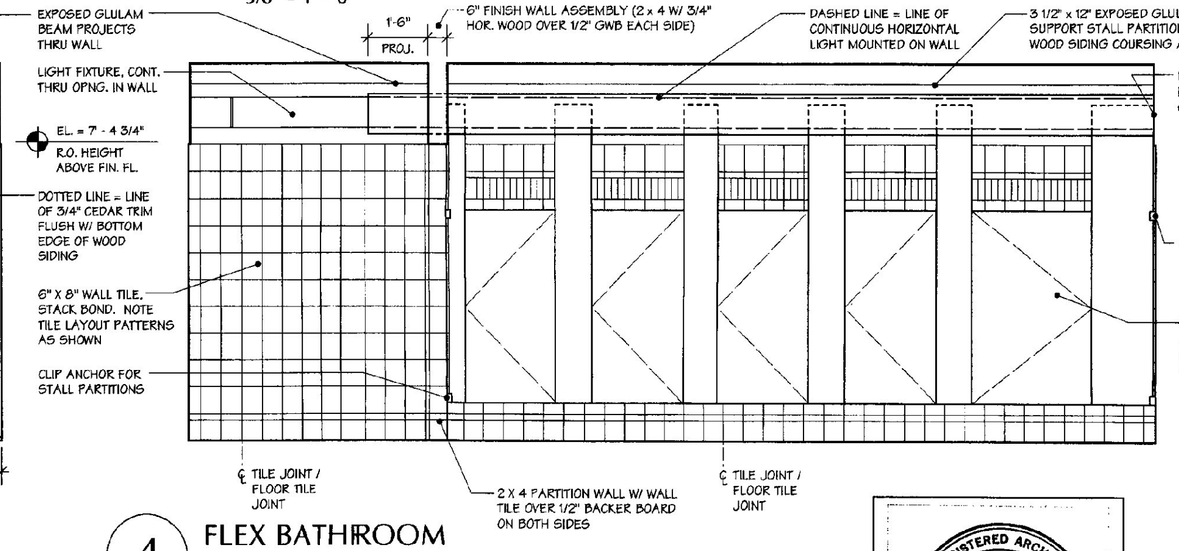

4 FLEX BATHROOM

3/8" = 1' - 0"

REGISTERED ARCHITECT MICHAEL WISNIEWSKI No. 1202 STATE OF VERMONT

JANUARY 16, 2001

WILLISTON INFORMATION CENTER I89 Southbound

Project #: IM - BLDG (4)

DUNCAN • WISNIEWSKI ARCHITECTURE ▪
255 SOUTH CHAMPLAIN STREET, BURLINGTON, VERMONT 05401 802.864.6693

A20sb

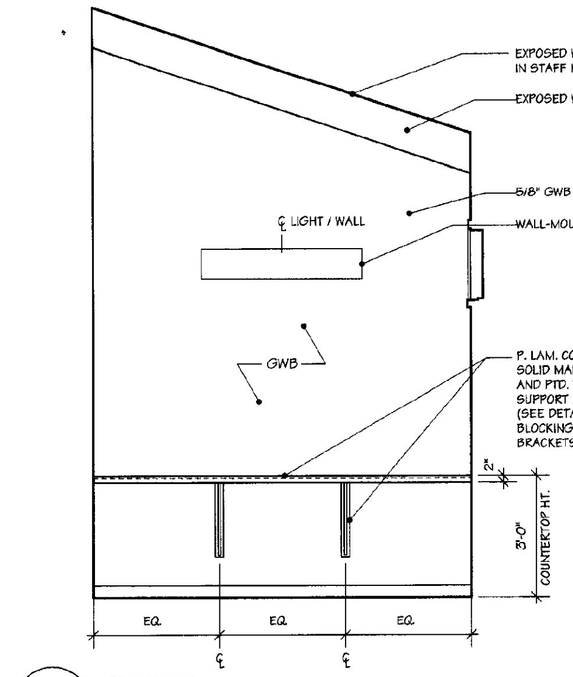

1 STAFF

3/8" = 1' - 0"

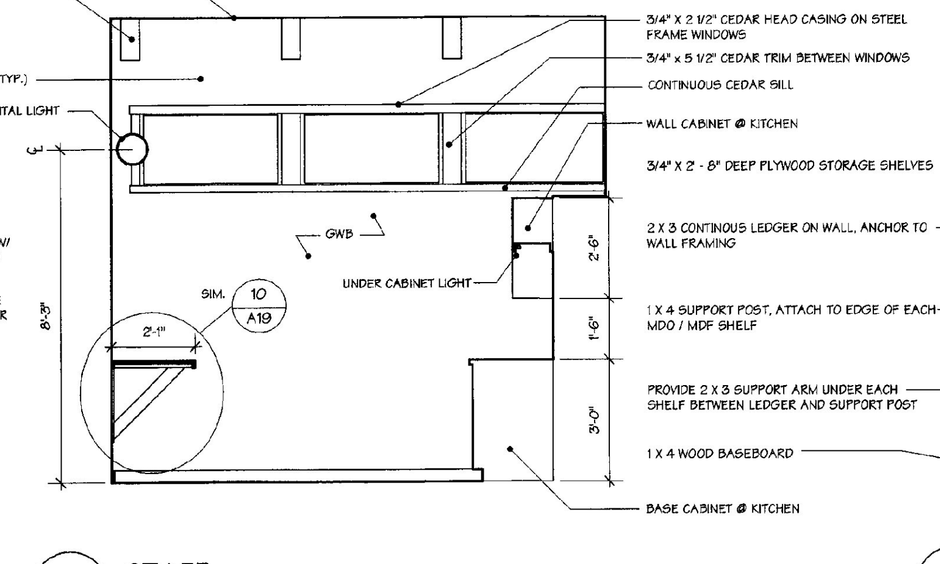

2 STAFF

3/8" = 1' - 0"

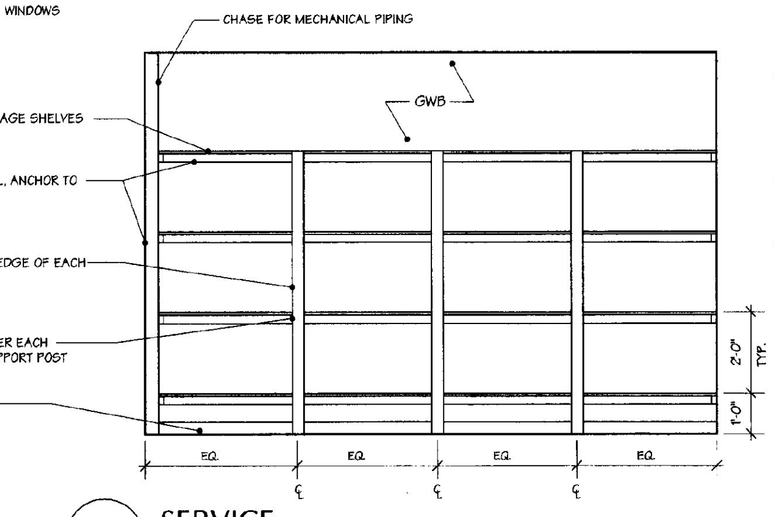

3 SERVICE

3/8" = 1' - 0"

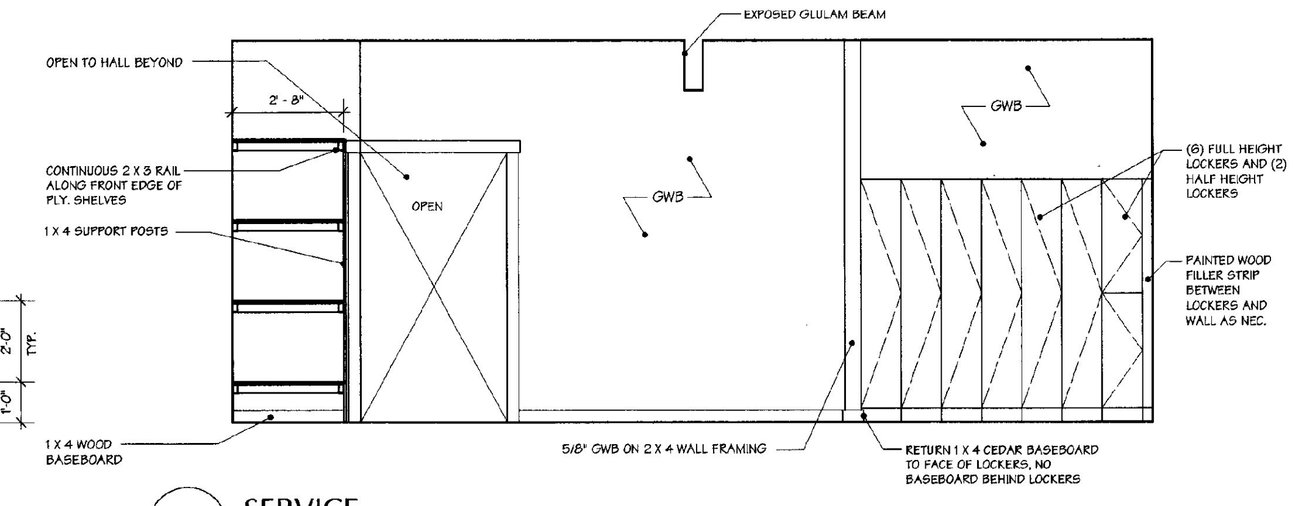

4 SERVICE

3/8" = 1' - 0"

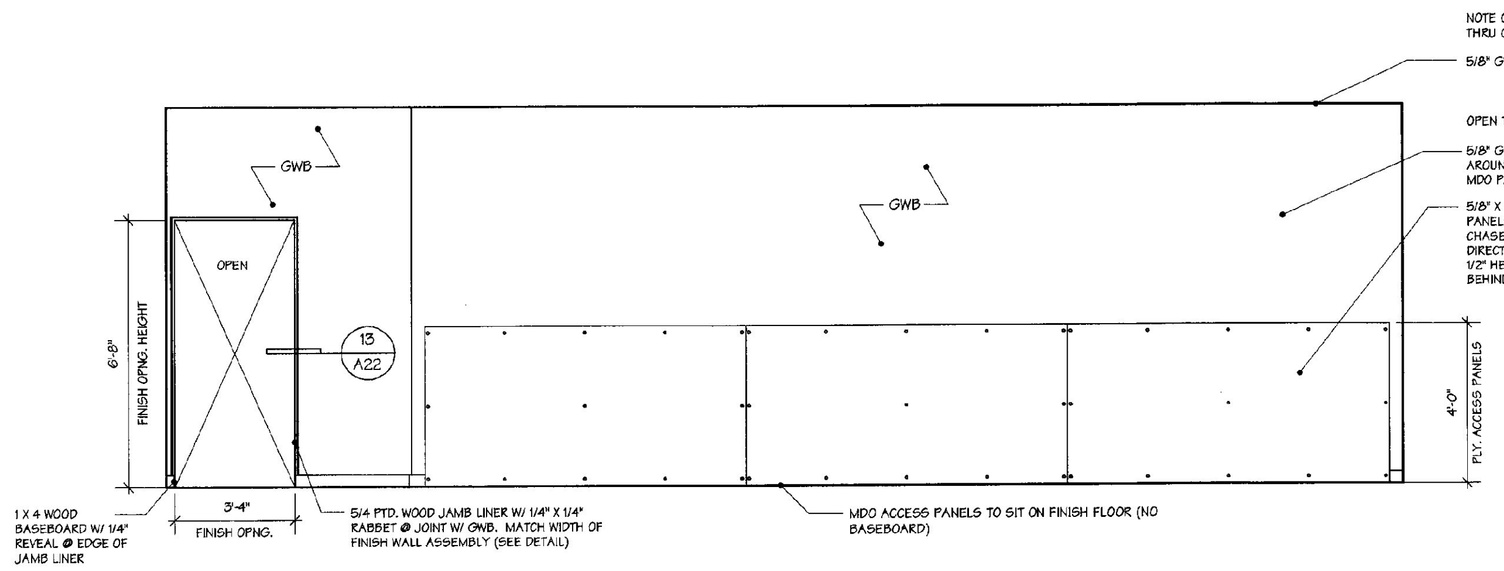

5 HALL 2

3/8" = 1' - 0"

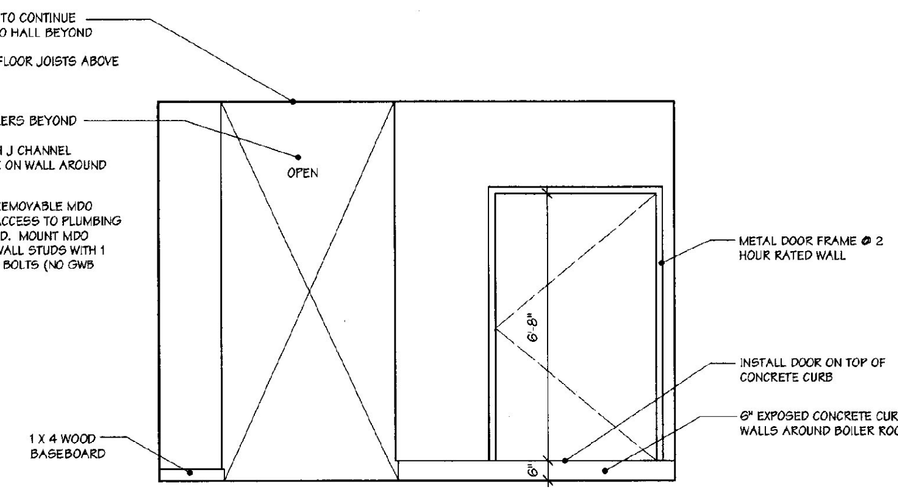

6 SERVICE

3/8" = 1' - 0"

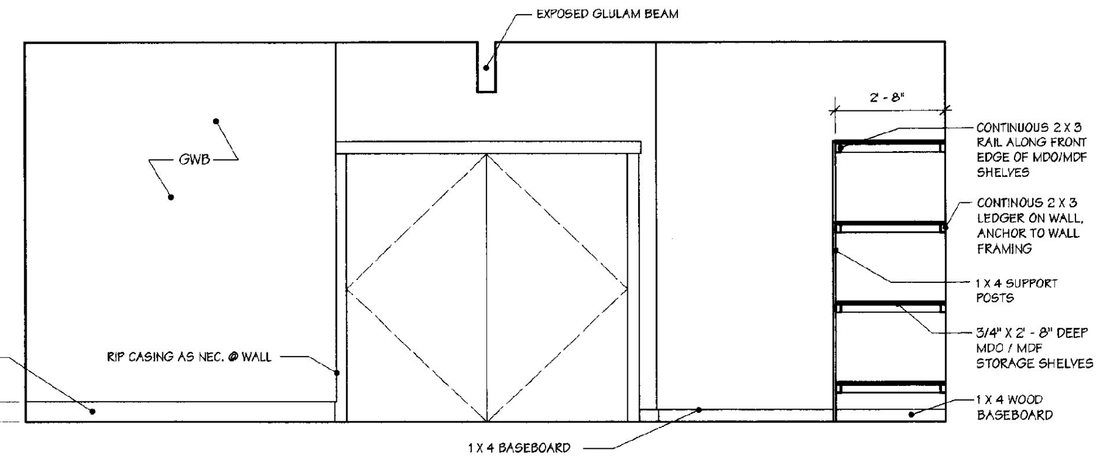

7 SERVICE

3/8" = 1' - 0"

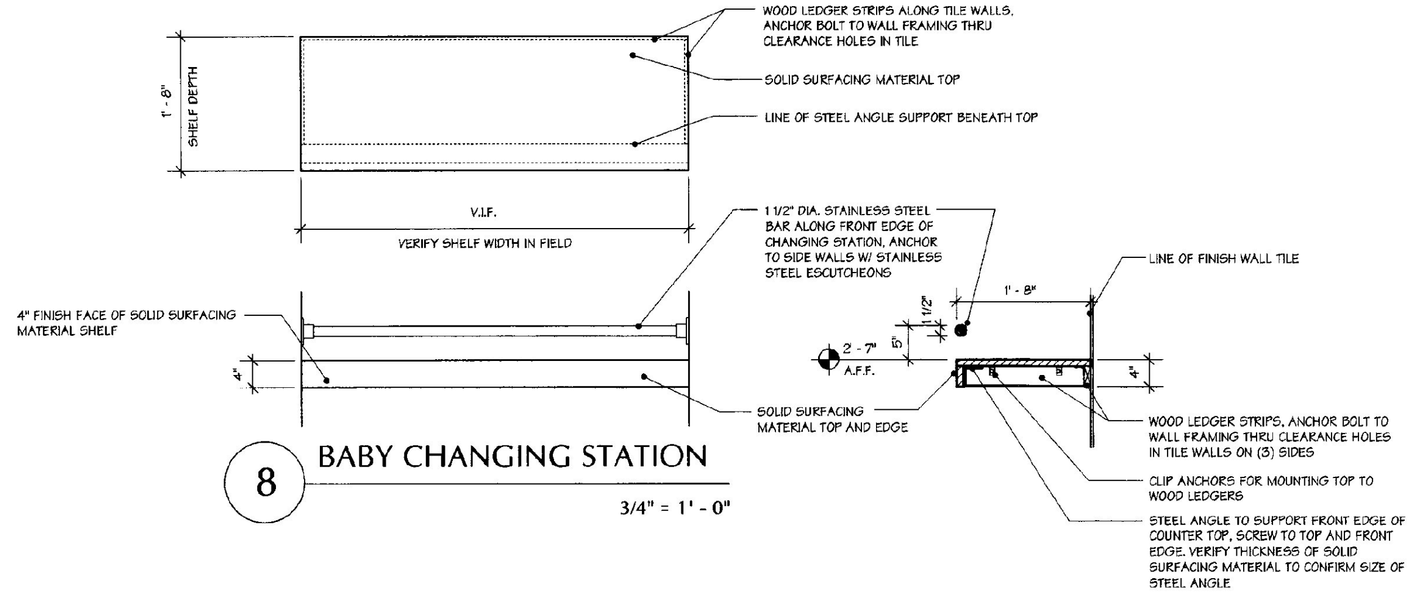

8 BABY CHANGING STATION

3/4" = 1' - 0"

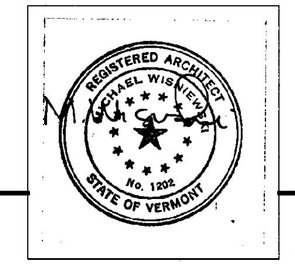

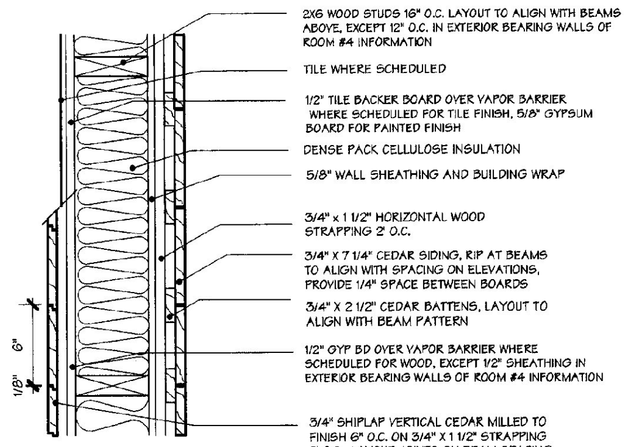

1 TYP EXTERIOR WALL - VERT SDG

1 1/2" = 1' - 0"

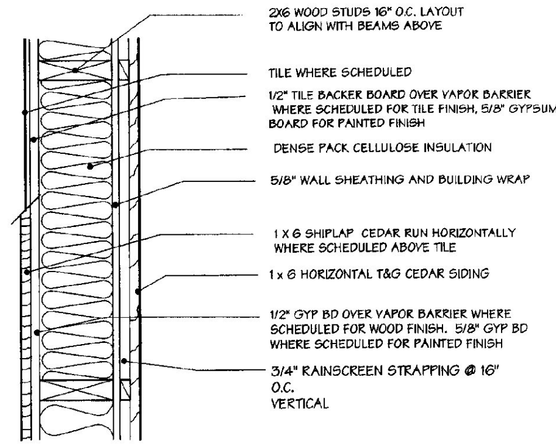

2 TYP EXTERIOR WALL - HOR SDG

1 1/2" = 1' - 0"

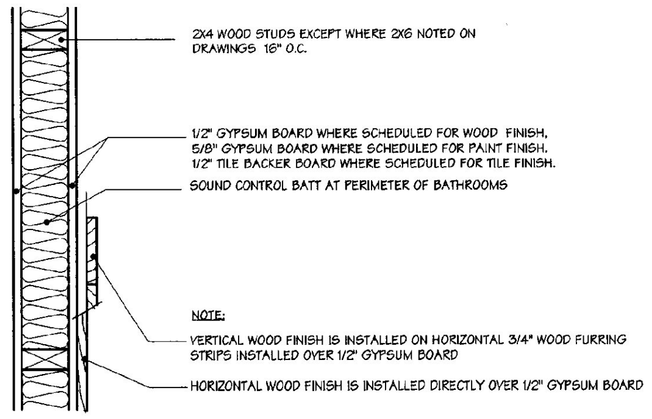

3 TYP INTERIOR WALL

1 1/2" = 1' - 0"

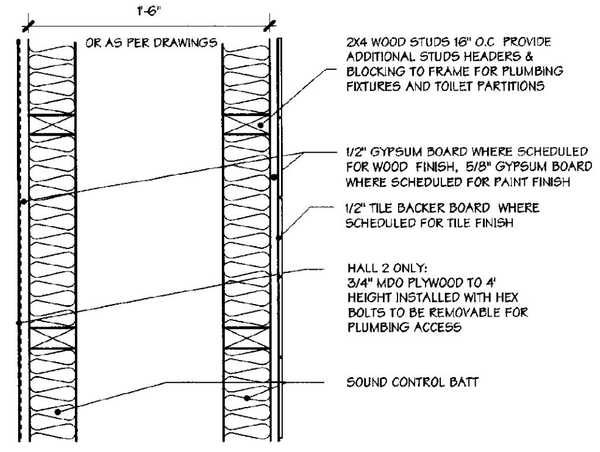

4 TYP PLUMBING WALL

1 1/2" = 1' - 0"

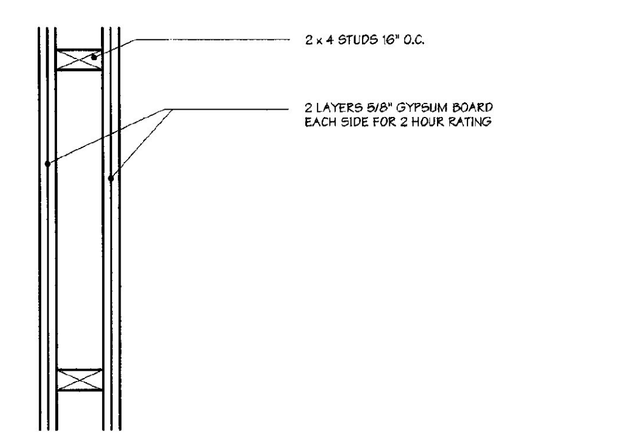

5 2 HR RATED WALL

1 1/2" = 1' - 0"

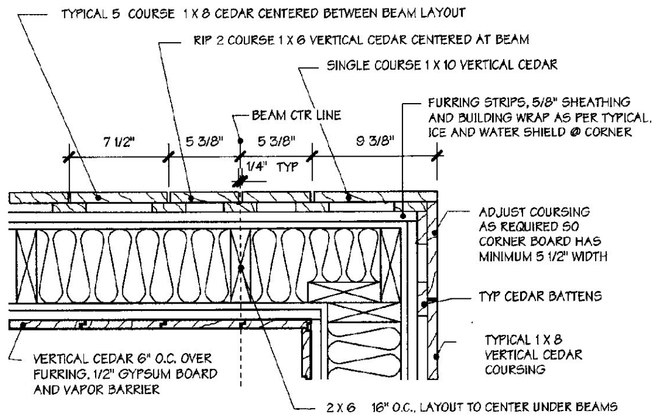

6 TYP CORNER -VERT SIDING

1 1/2" = 1' - 0"

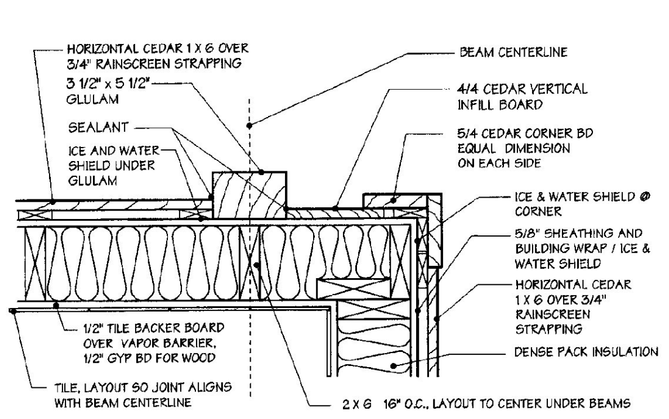

7 TYP CORNER - HORIZ SIDING

1 1/2" = 1' - 0"

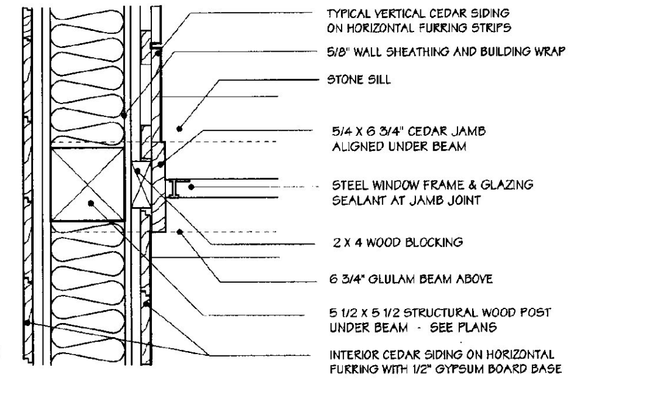

8 WALL/POST/WINDOW@ ENTRY

1 1/2" = 1' - 0"

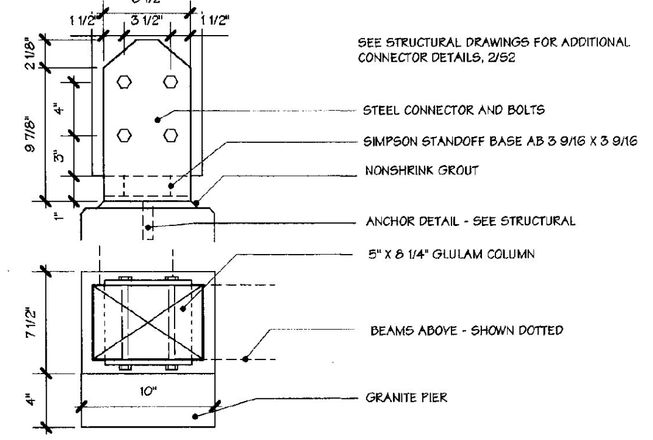

9 POST/PIER @ GABLE END

1 1/2" = 1' - 0"

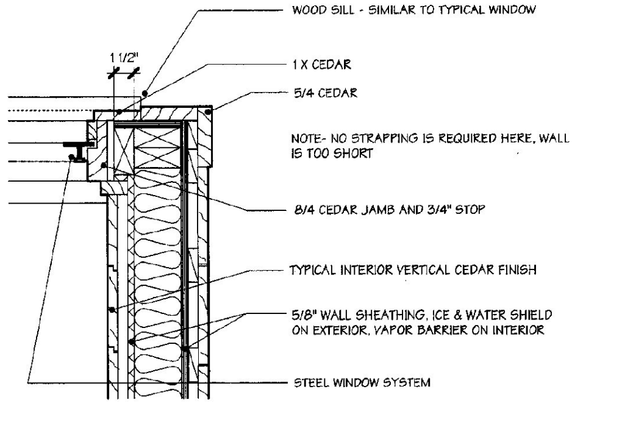

10 ENTRY DORMER WALL

1 1/2" = 1' - 0"

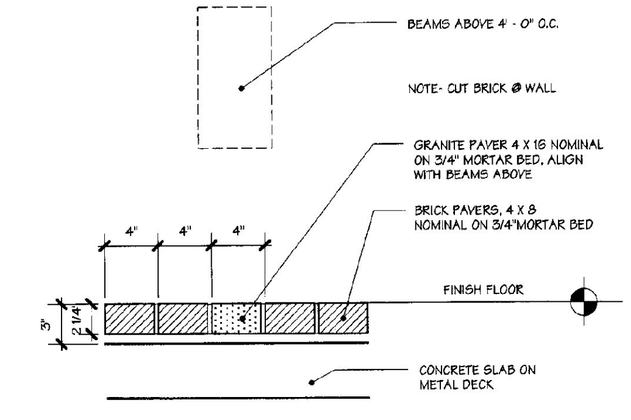

16 BRICK & GRANITE FLOORING

1 1/2" = 1' - 0"

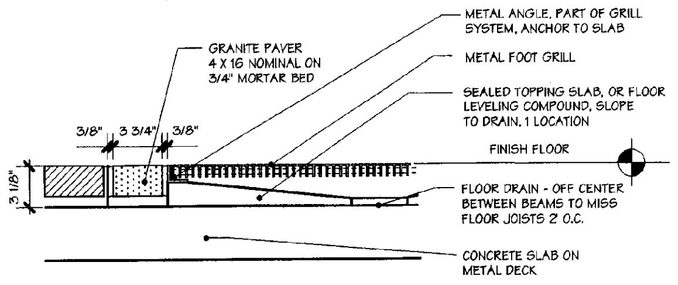

17 FLOOR GRATE DETAIL

1 1/2" = 1' - 0"

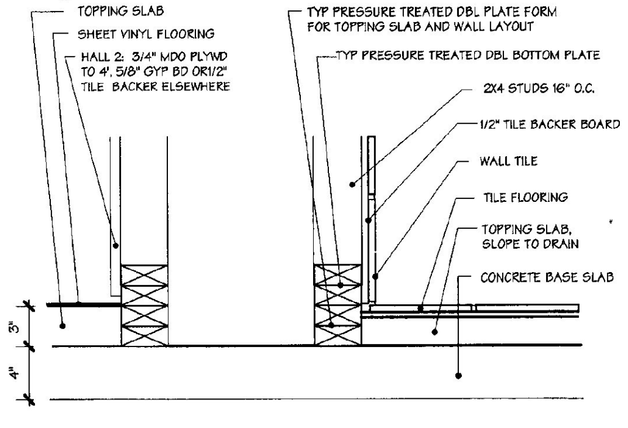

18 PLUMBING CHASE/FLOOR DETAIL

1 1/2" = 1' - 0"

1 1/2" = 1' - 0"

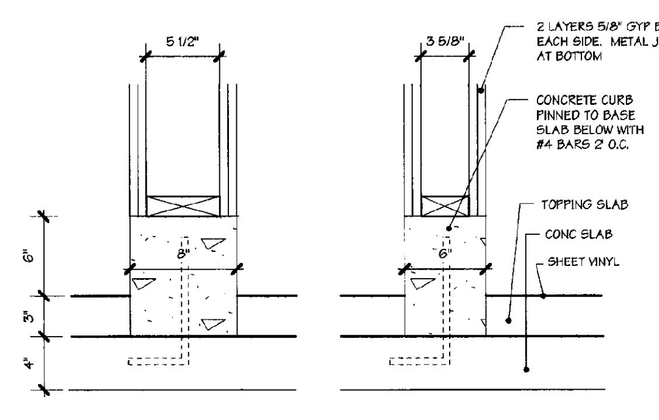

19 FLOOR CURBS AT 2 HR WALL

1 1/2" = 1' - 0"

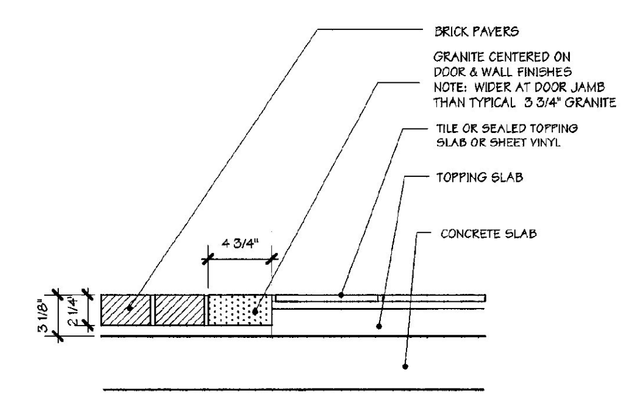

20 BRICK & TILE FLOOR JOINT

1 1/2" = 1' - 0"

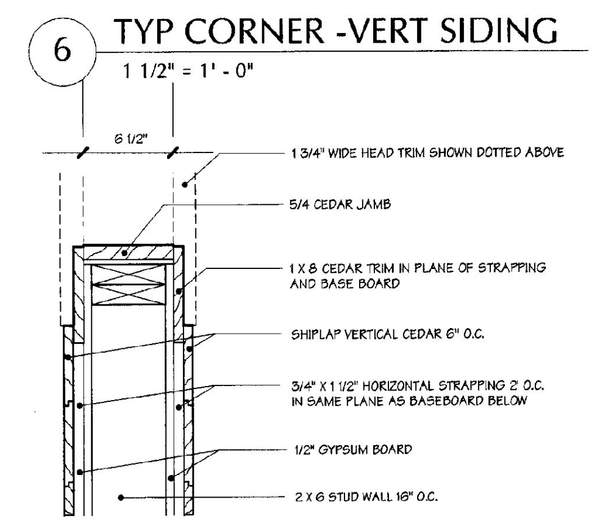

11 INTERIOR OPENING TRIM

1 1/2" = 1' - 0"

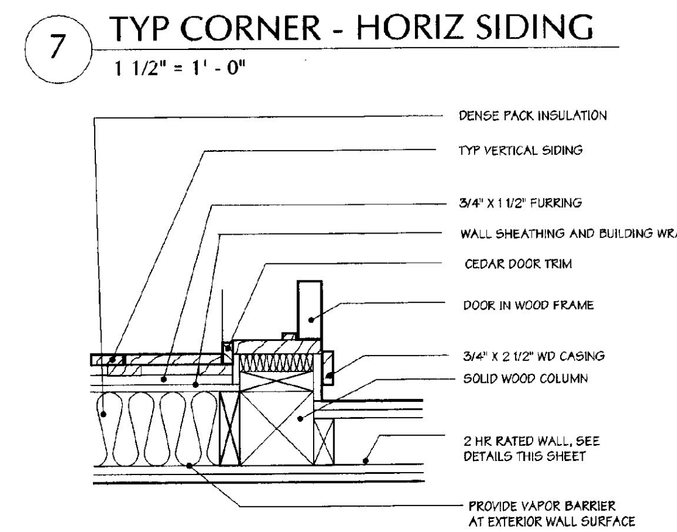

12 DETAIL AT REAR ENTRY

1 1/2" = 1' - 0"

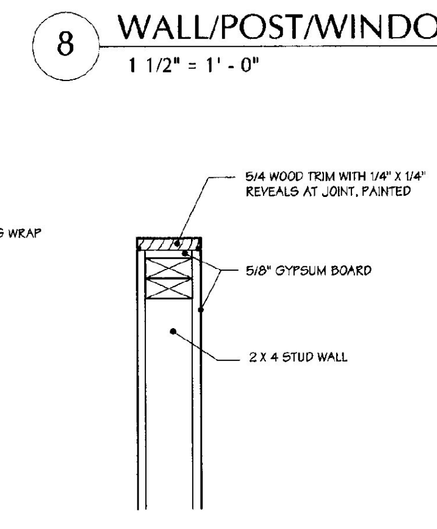

13 CASING DETAIL

1 1/2" = 1' - 0"

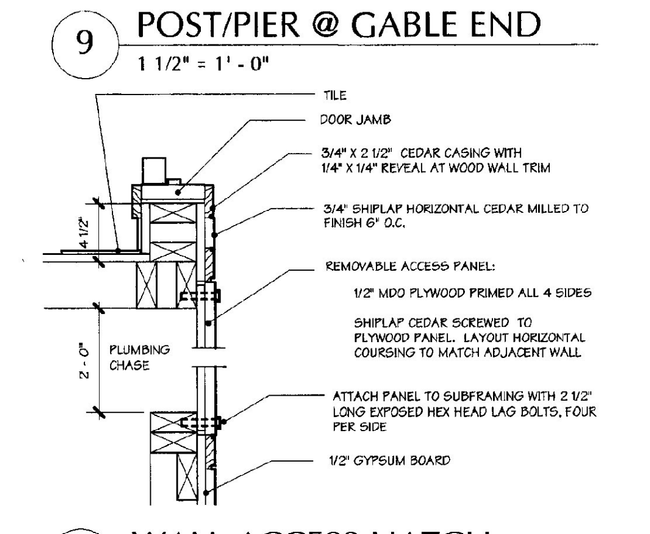

14 WALL ACCESS HATCH

1 1/2" = 1' - 0"

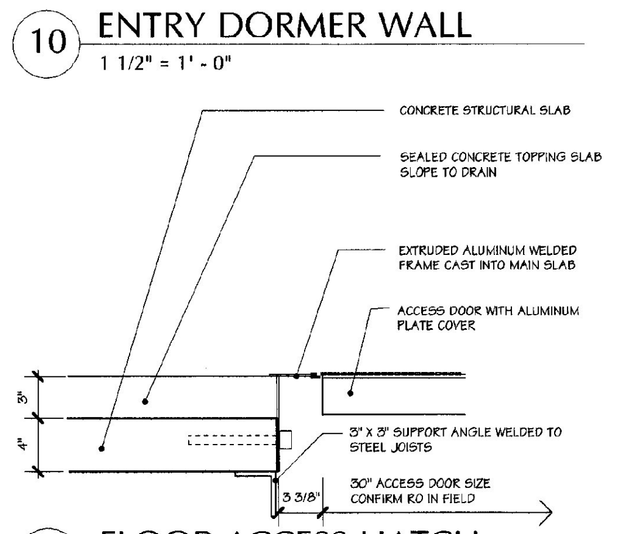

15 FLOOR ACCESS HATCH

1 1/2" = 1' - 0"

MICHAEL WISNIEWSKI REGISTERED ARCHITECT No. 1202 STATE OF VERMONT

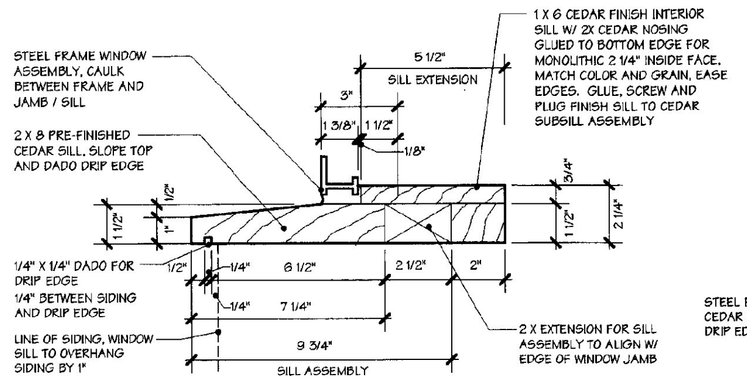

10 WINDOW SILL DETAIL-TYPICAL

NOTE- THE WIDTH OF WINDOW SILLS MAY VARY W/ DIFFERENT WALL CONDITIONS, MAINTAIN A CONSISTENT 1" OVERHANG WITH SIDING

3" = 1' - 0"

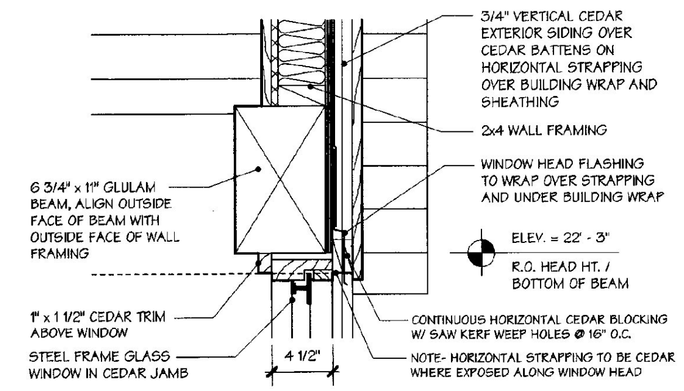

13 SECTION DETAIL @ VESTIBULE

1 1/2" = 1' - 0"

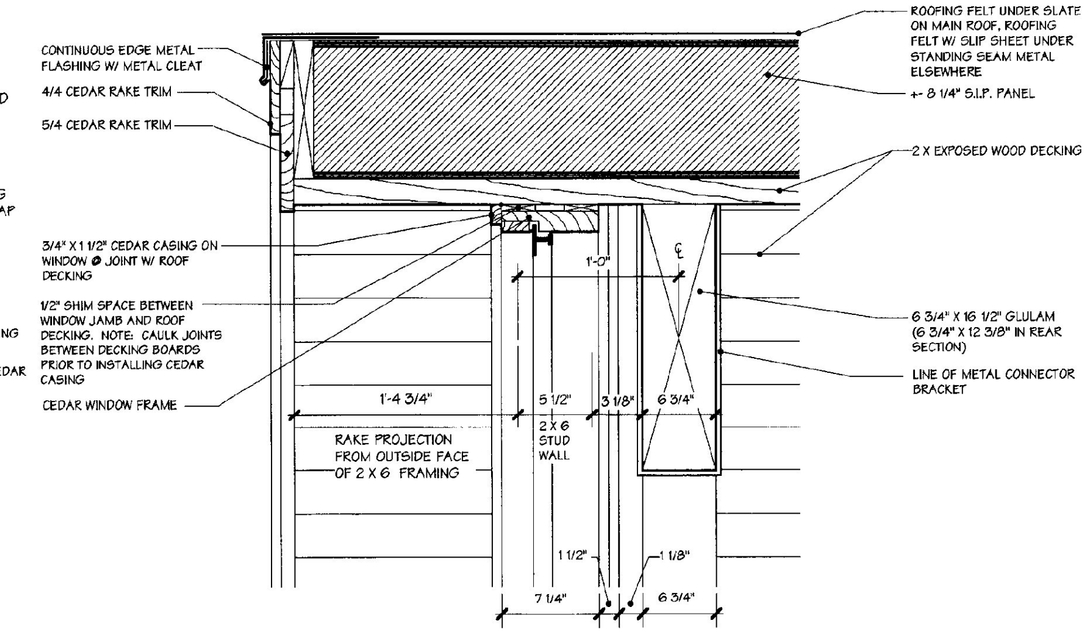

6 SECTION DETAIL @ RAKE

1 1/2" = 1' - 0"

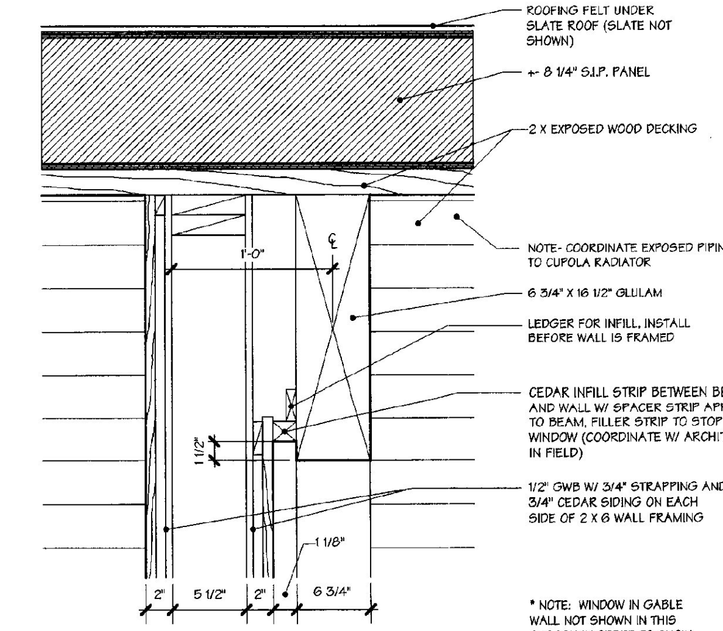

9 SECTION DETAIL NEAR RIDGE

1 1/2" = 1' - 0"

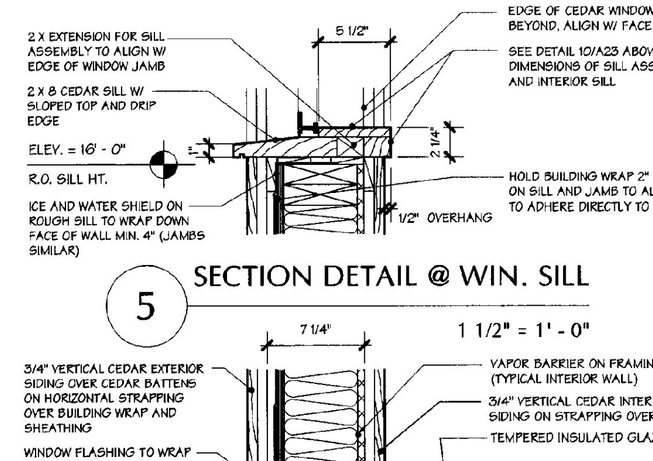

5 SECTION DETAIL @ WIN. SILL

1 1/2" = 1' - 0"

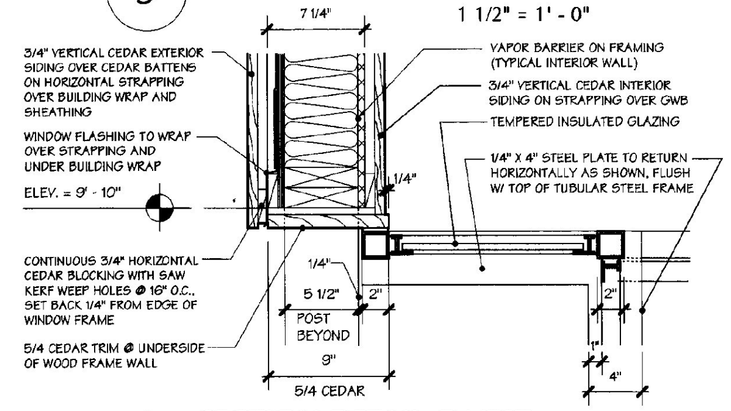

4 SECTION DETAIL @ VEST.

1 1/2" = 1' - 0"

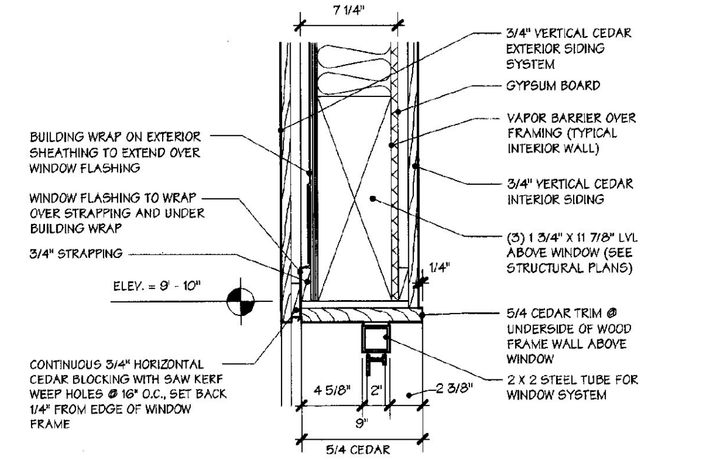

7 EAVE @ DUCT CHASE

1 1/2" = 1' - 0"

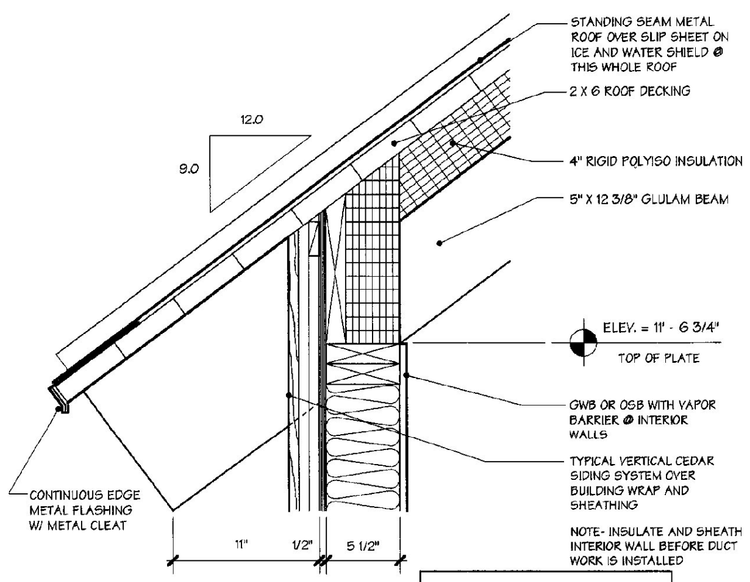

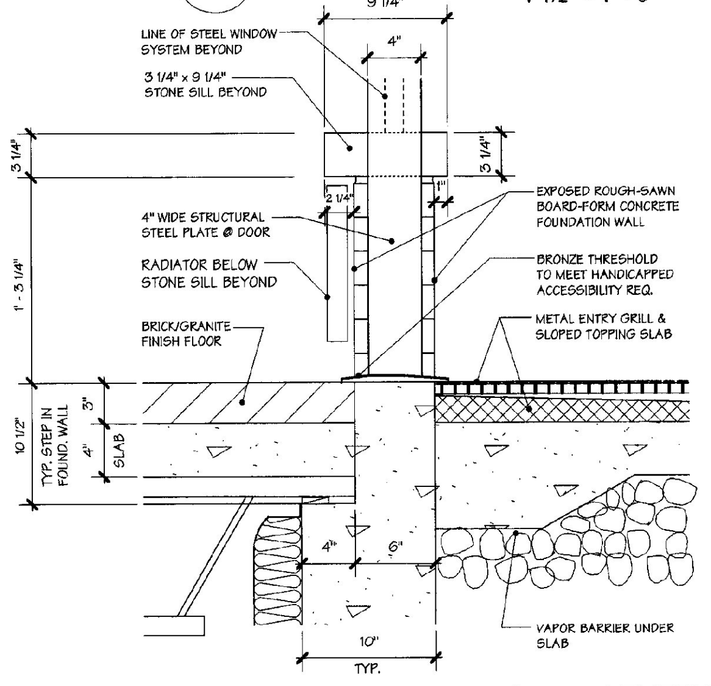

2 SECTION DETAIL @ ENTRY

1 1/2" = 1' - 0"

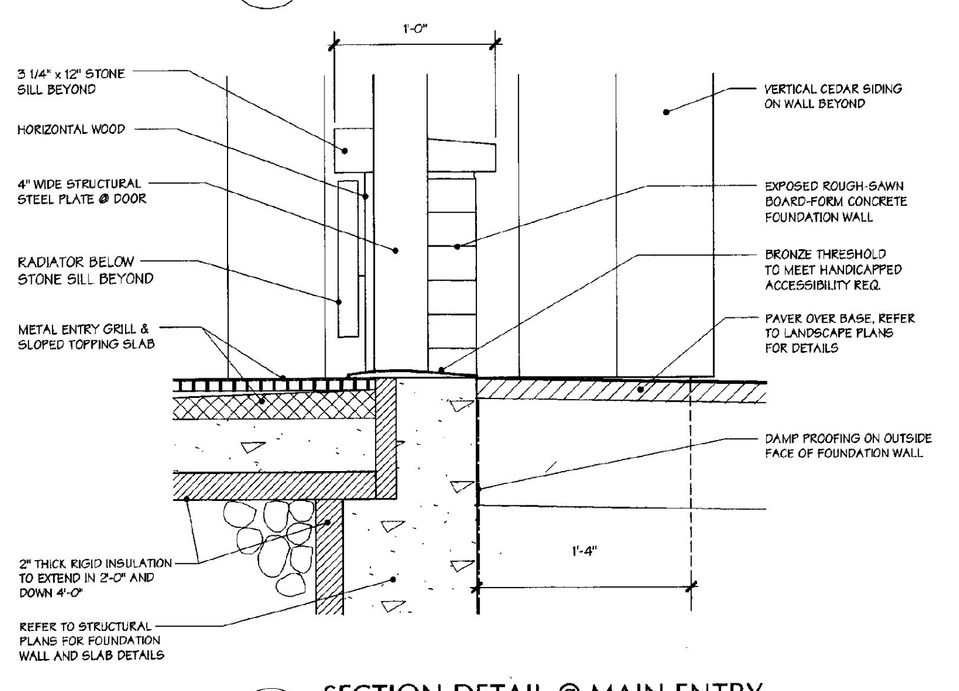

12 SECTION DETAIL @ VESTIBULE

1 1/2" = 1' - 0"

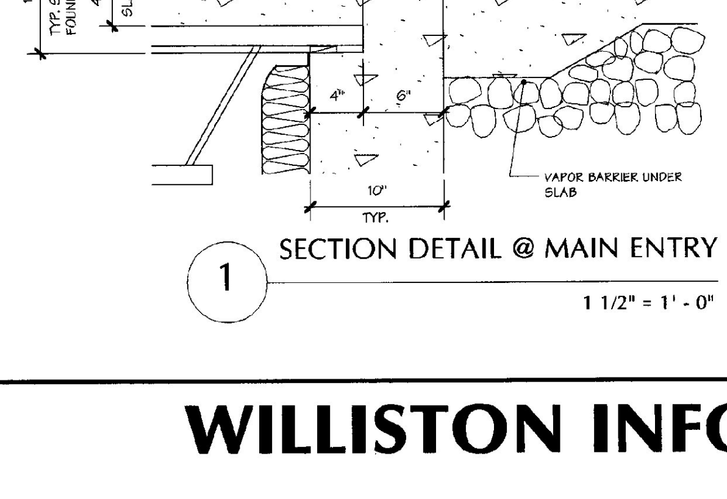

1 SECTION DETAIL @ MAIN ENTRY

1 1/2" = 1' - 0"

11 SECTION DETAIL @ MAIN ENTRY

1 1/2" = 1' - 0"

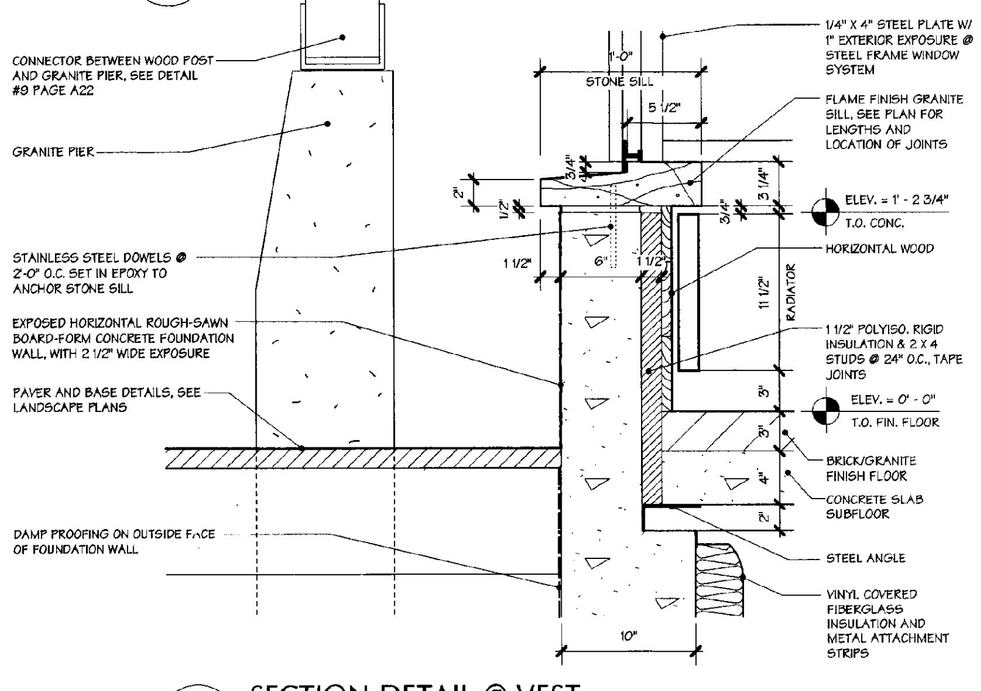

3 SECTION DETAIL @ VEST.

1 1/2" = 1' - 0"

JANUARY 16, 2001

WILLISTON INFORMATION CENTER I89 Southbound

Project #: IM - BLDG (4)

DUNCAN • WISNIEWSKI ARCHITECTURE ▪
255 SOUTH CHAMPLAIN STREET, BURLINGTON, VERMONT 05401 802.864.6693

A23sb

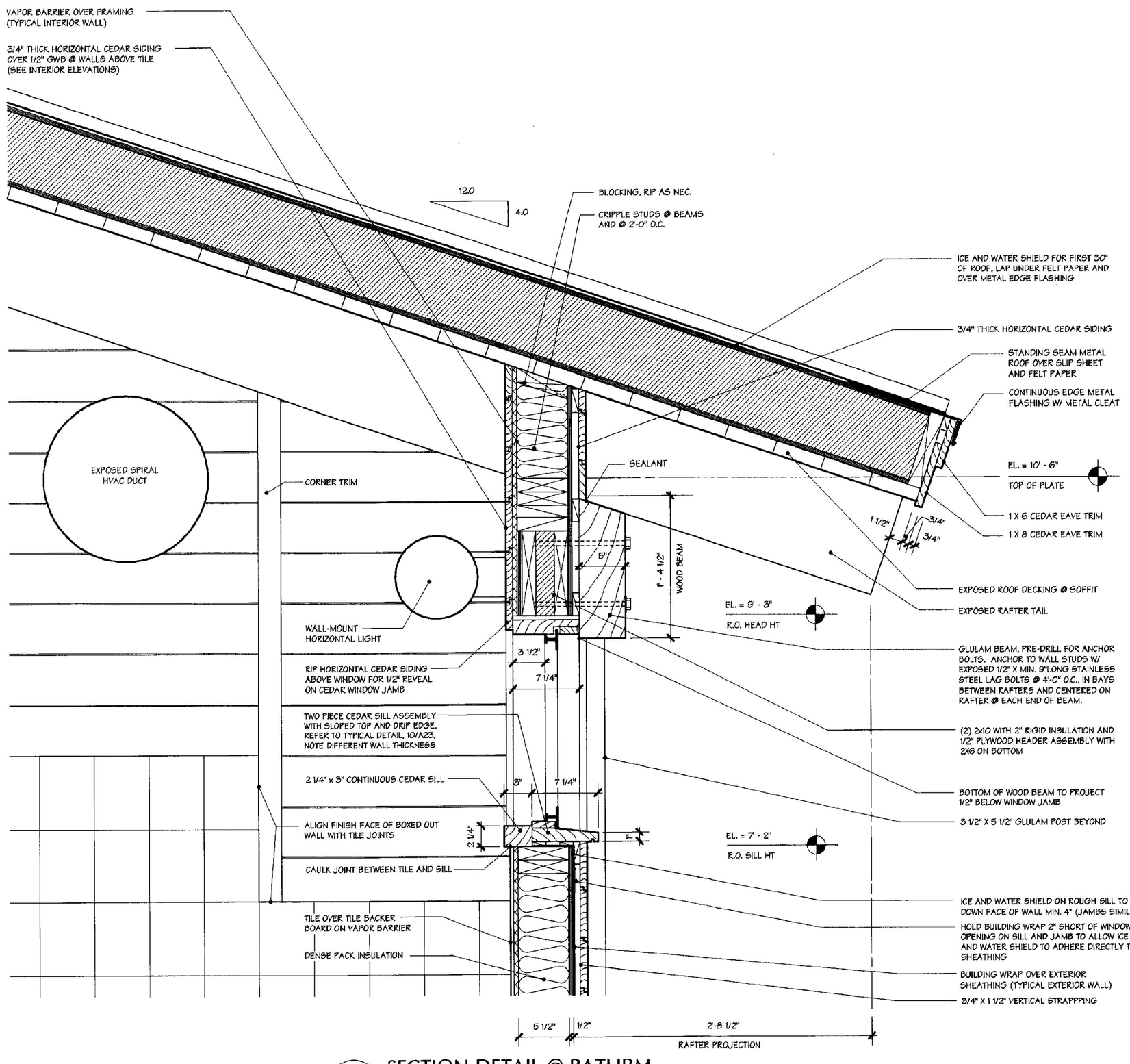

2 SECTION DETAIL @ BATHRM.

1 1/2" = 1' - 0"

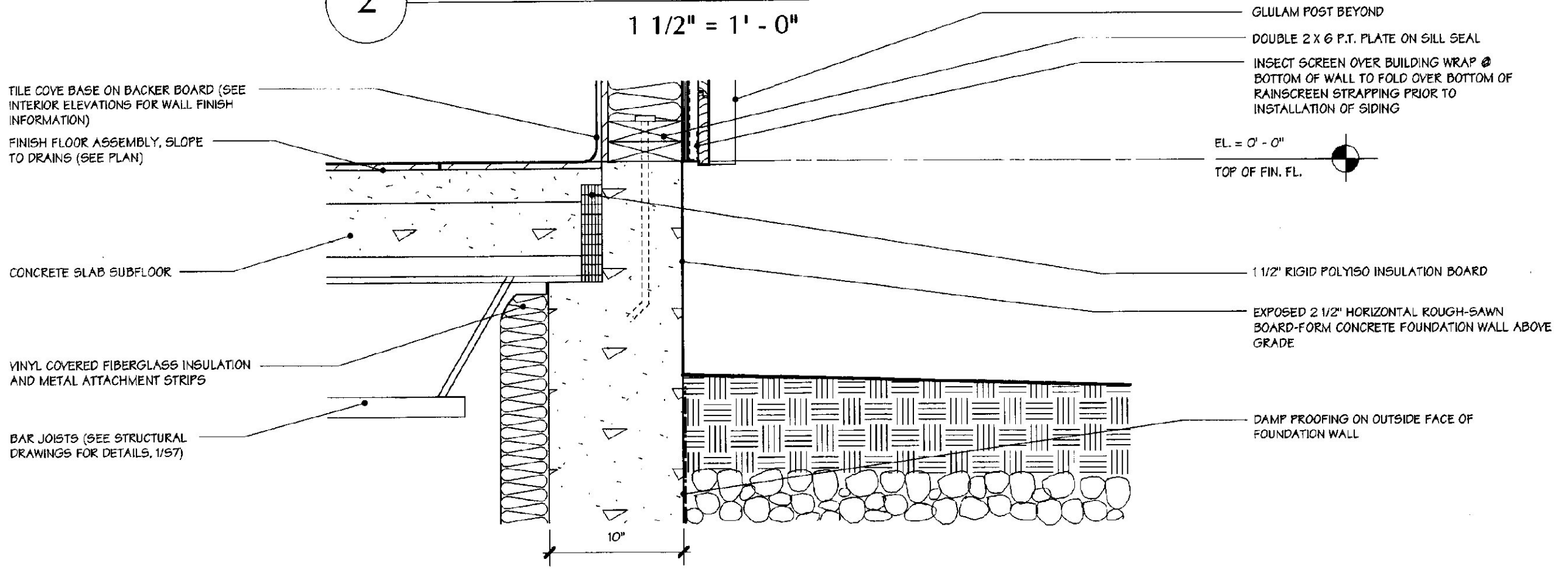

1 SECTION DETAIL @ BATHRM.

1 1/2" = 1' - 0"

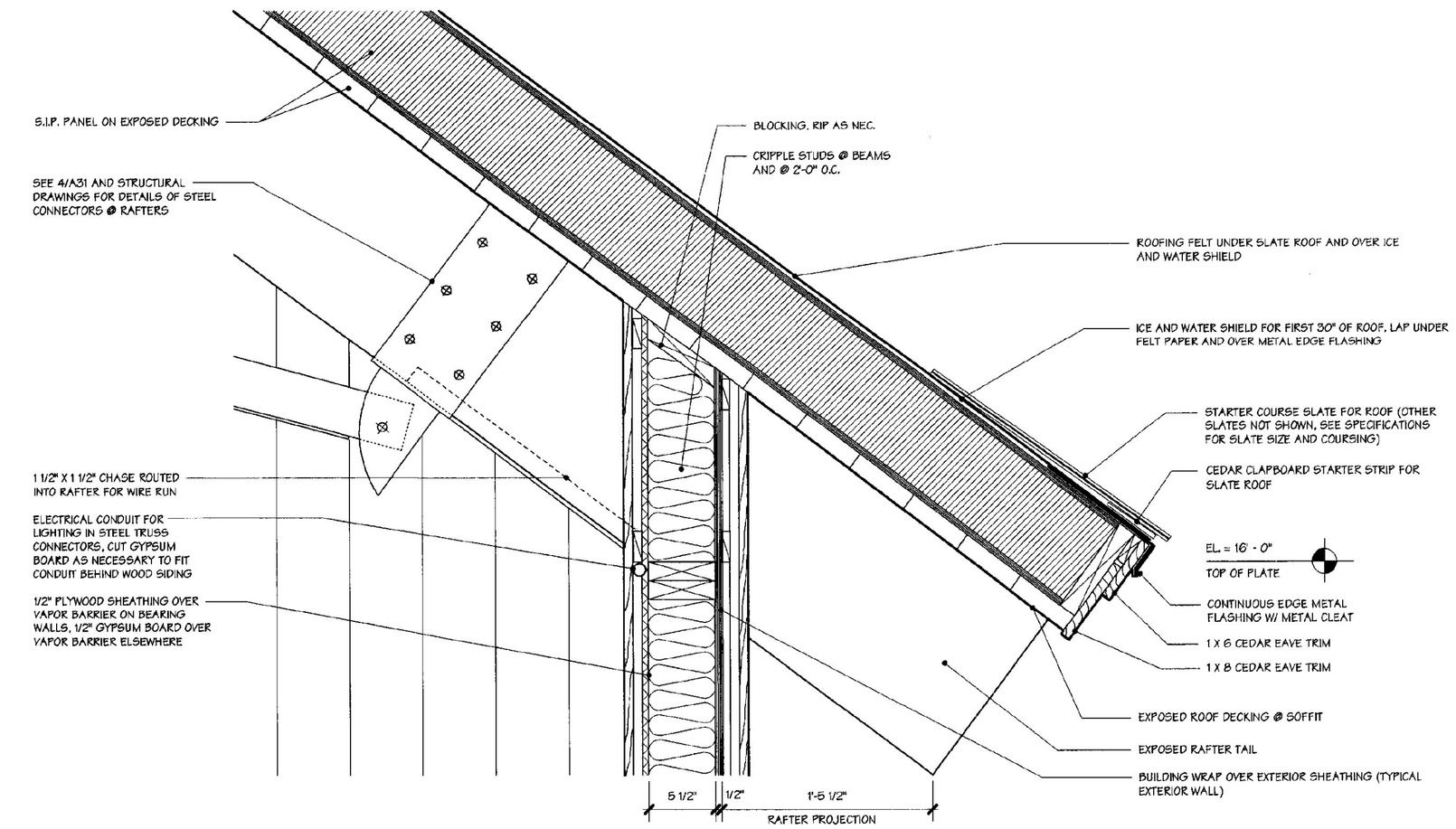

7 SECTION DETAIL @ EAVE

1 1/2" = 1' - 0"

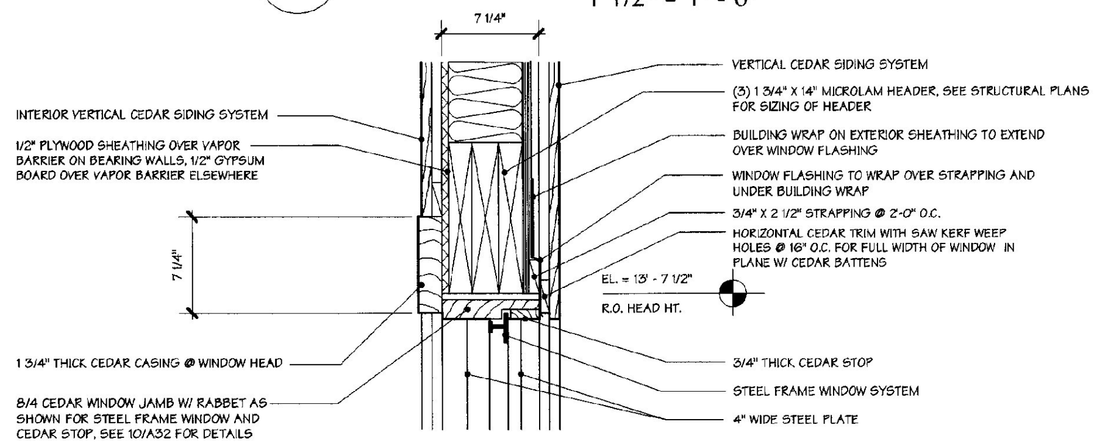

6 SECTION DETAIL @ WINDOW

1 1/2" = 1' - 0"

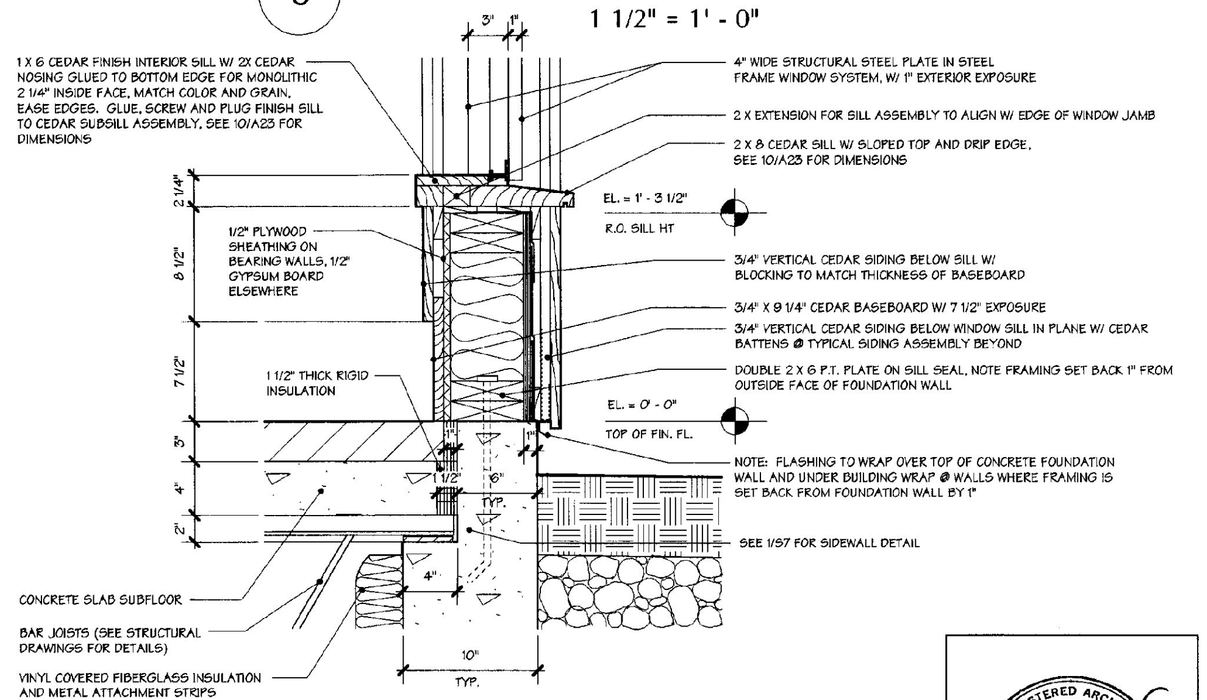

5 SECTION DETAIL @ WINDOW

1 1/2" = 1' - 0"

REGISTERED ARCHITECT MICHAEL WISNIEWSKI NO. 1302 STATE OF VERMONT

JANUARY 16, 2001

WILLISTON INFORMATION CENTER I89 Southbound

Project #: IM - BLDG (4)

DUNCAN • WISNIEWSKI ARCHITECTURE ▪
255 SOUTH CHAMPLAIN STREET, BURLINGTON, VERMONT 05401 802.864.6693

A24sb

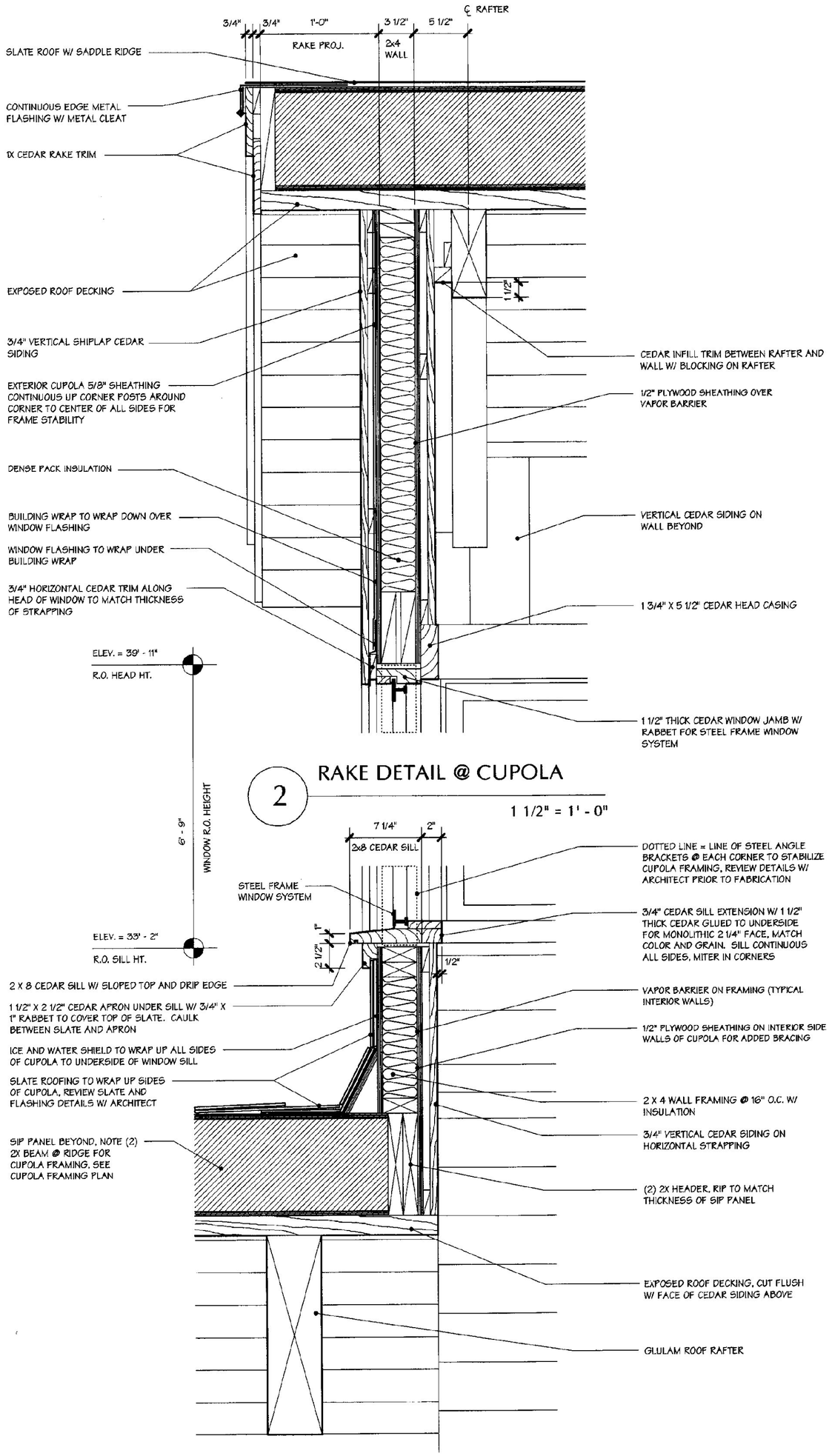

1 RAKE WALL DETAIL @ CUPOLA
1 1/2" = 1' - 0"

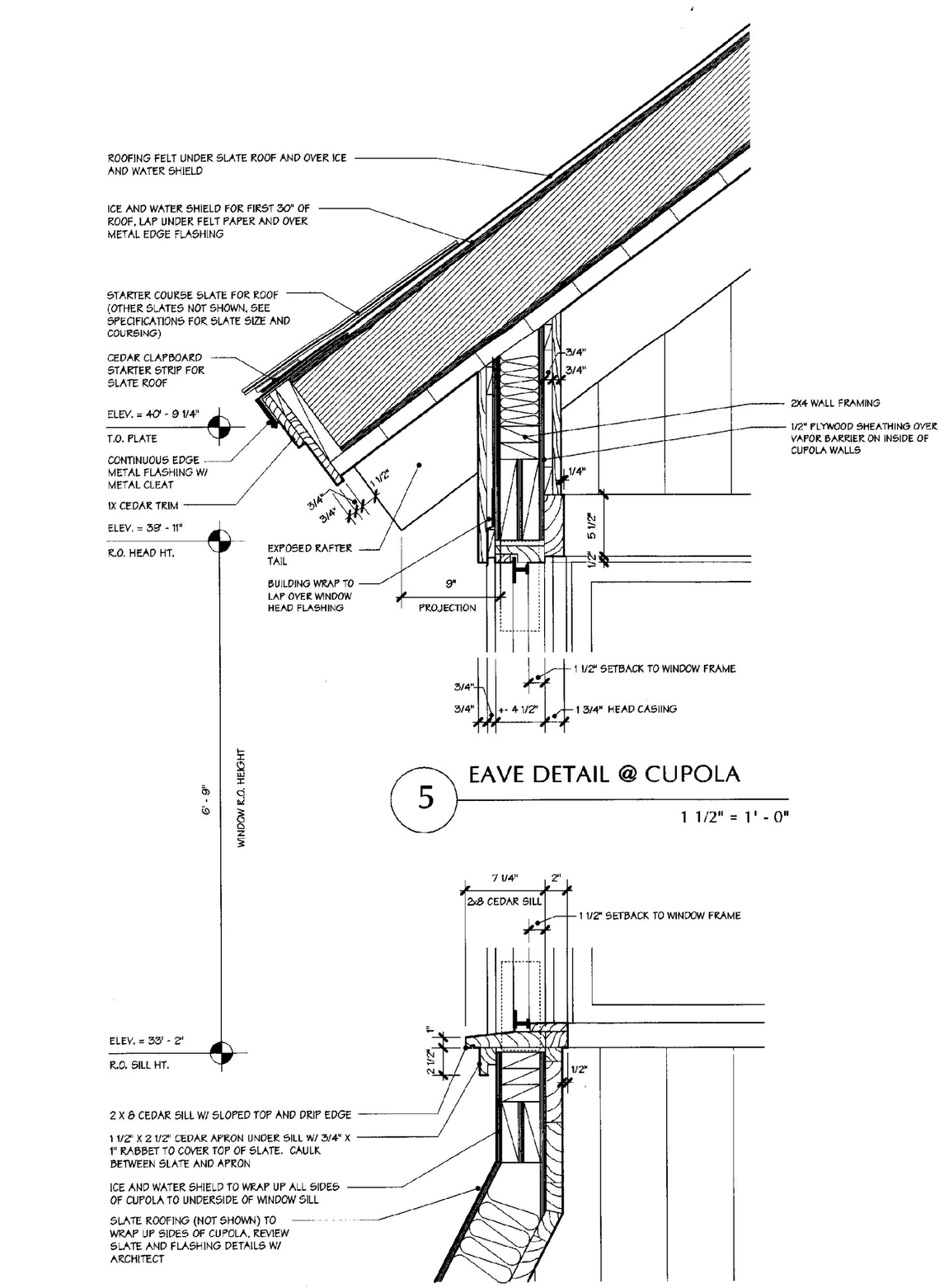

4 SECTION DETAIL @ CUPOLA
1 1/2" = 1' - 0"

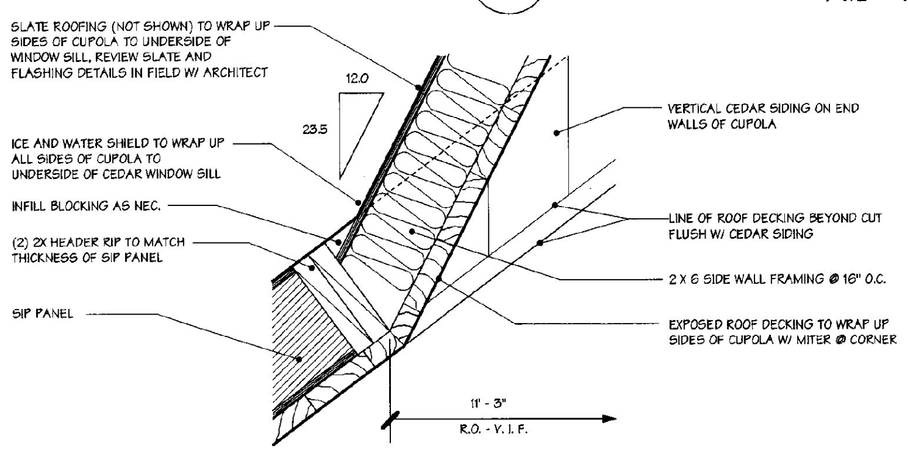

3 SECTION DETAIL @ CUPOLA
1 1/2" = 1' - 0"

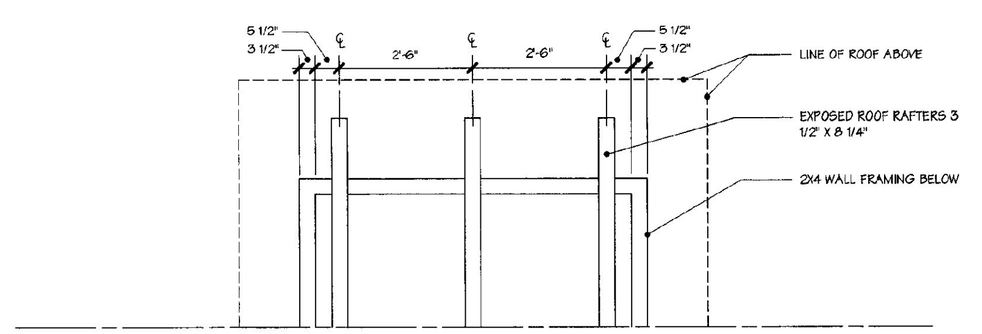

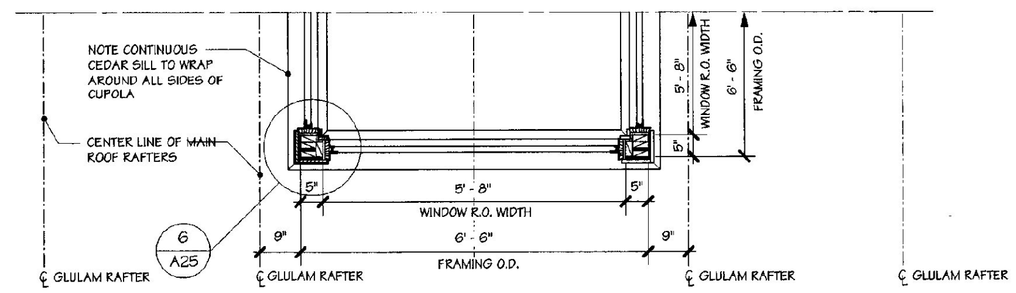

8 PLAN @ CUPOLA
1/2" = 1' - 0"

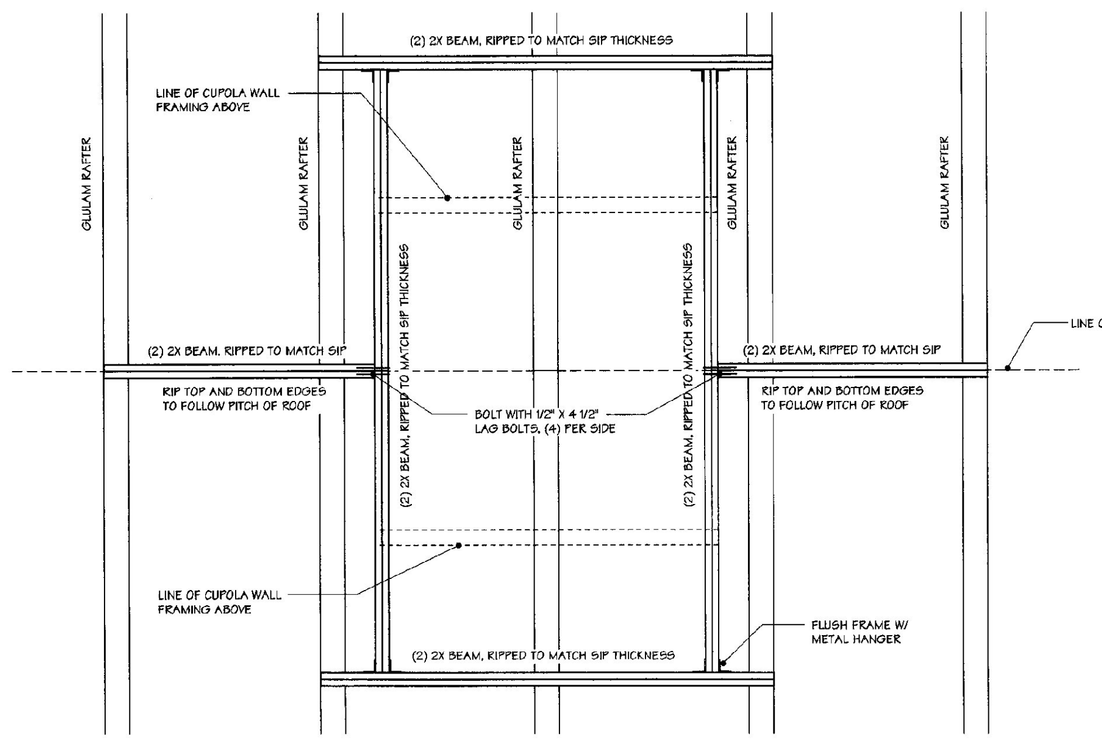

7 FRAMING PLAN @ CUPOLA
1/2" = 1' - 0"

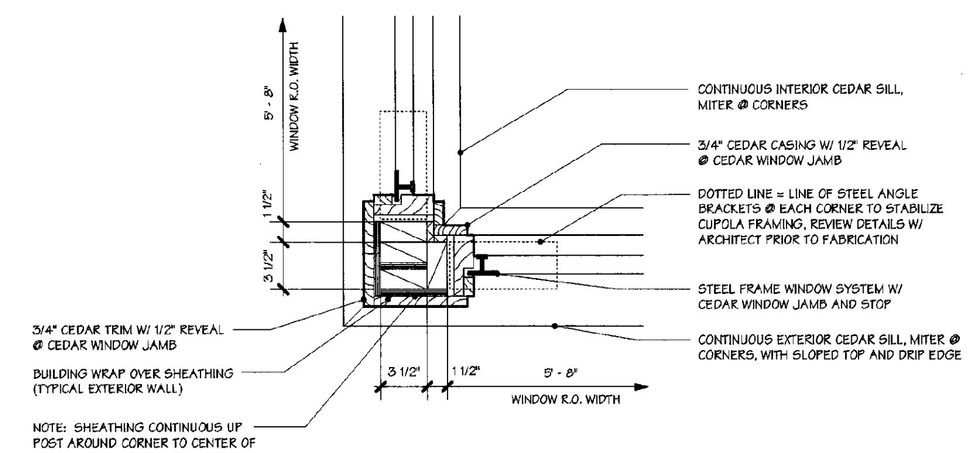

6 PLAN DETAIL @ CUPOLA
1 1/2" = 1' - 0"

REGISTERED ARCHITECT
ISRAEL WISNIEWSKI
NO. 1292
STATE OF VERMONT

WILLISTON INFORMATION CENTER I89 Southbound

Project #: IM - BLDG (4)

DUNCAN • WISNIEWSKI ARCHITECTURE ▪
255 SOUTH CHAMPLAIN STREET, BURLINGTON, VERMONT 05401 802.864.6693

JANUARY 16, 2001

A25sb

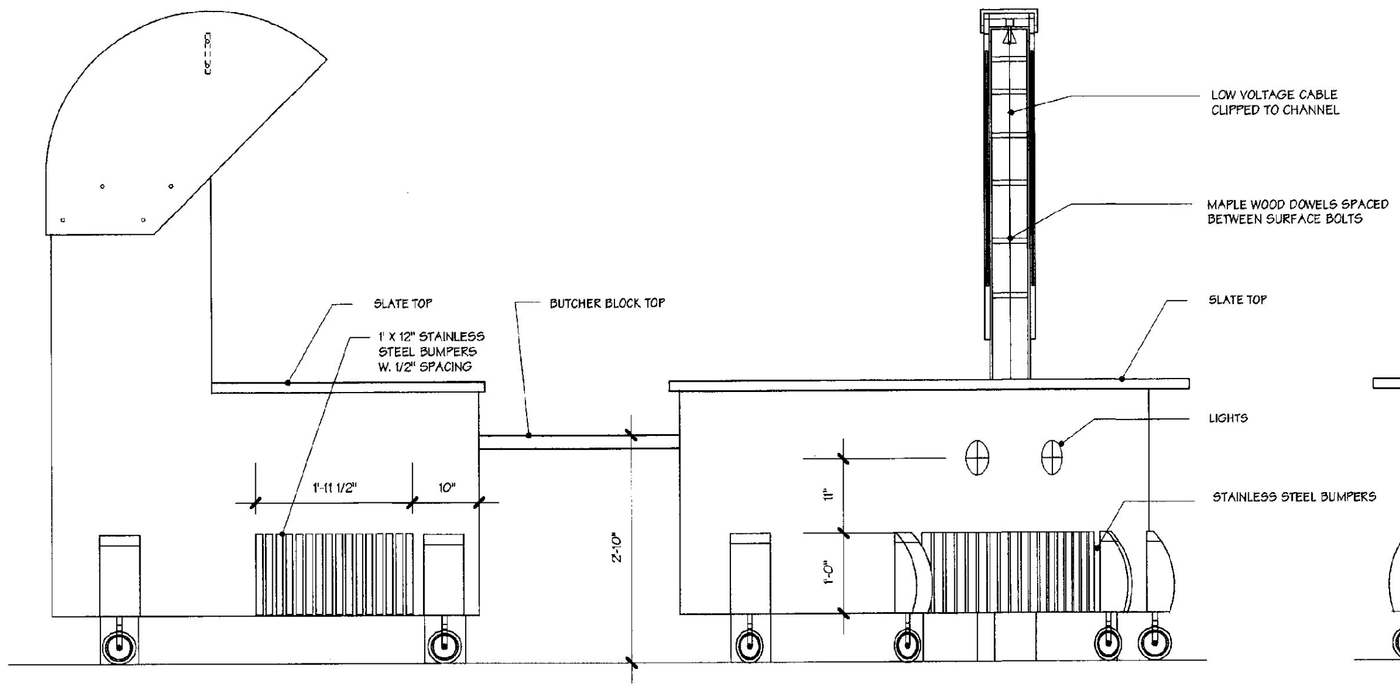

ELEVATION 4

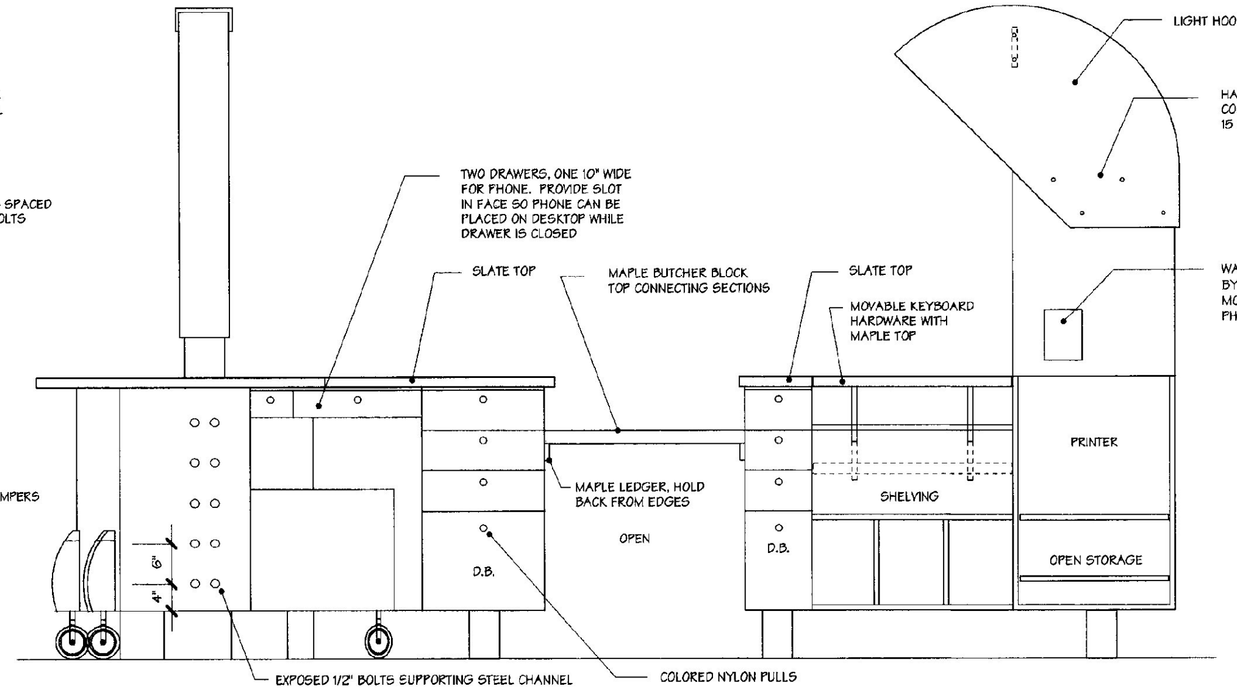

ELEVATION 2

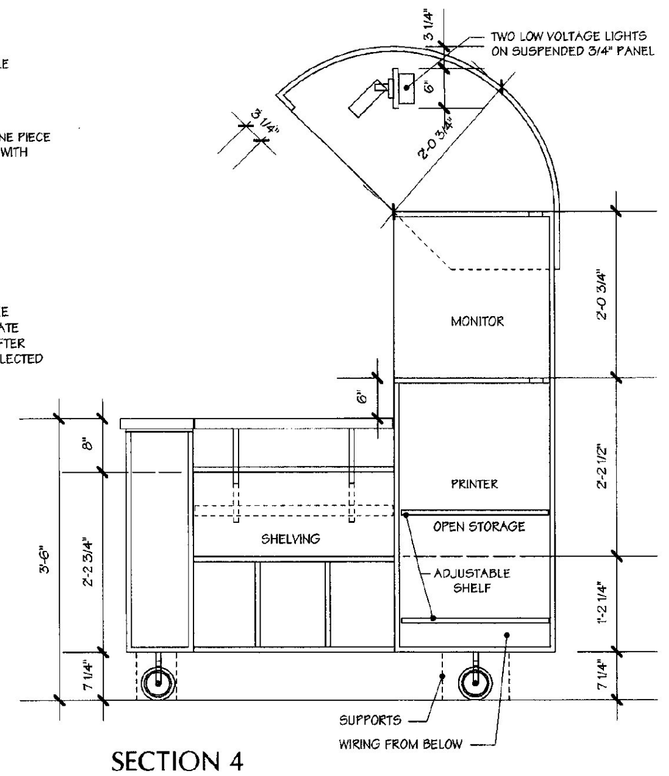

SECTION 4

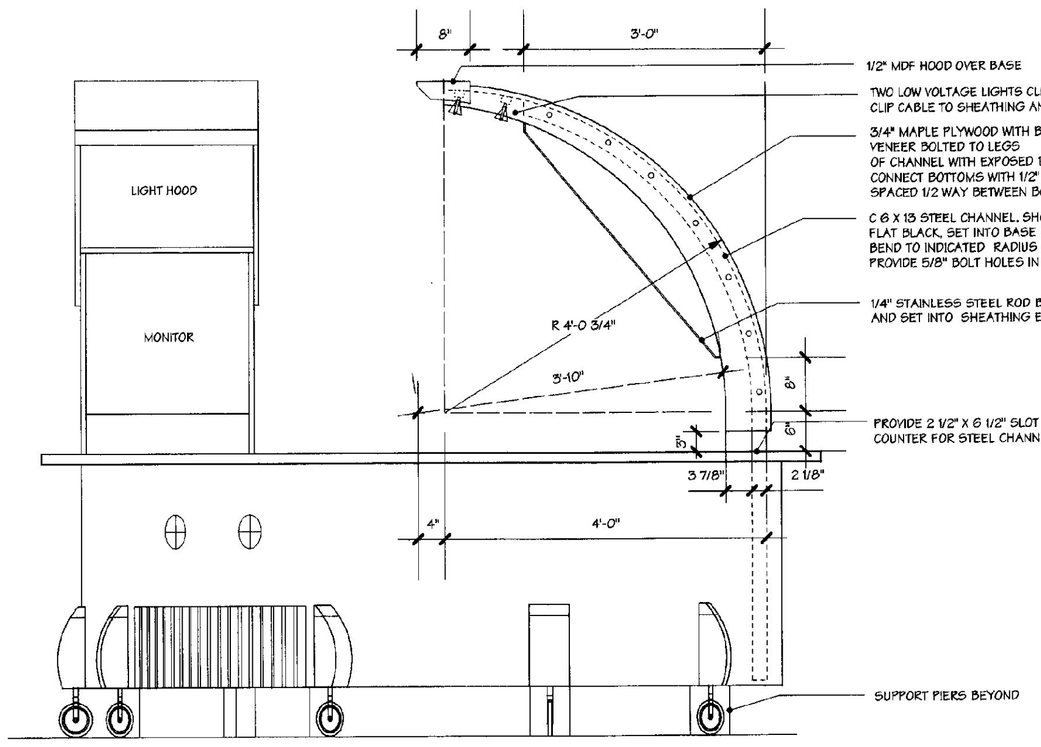

ELEVATION 3

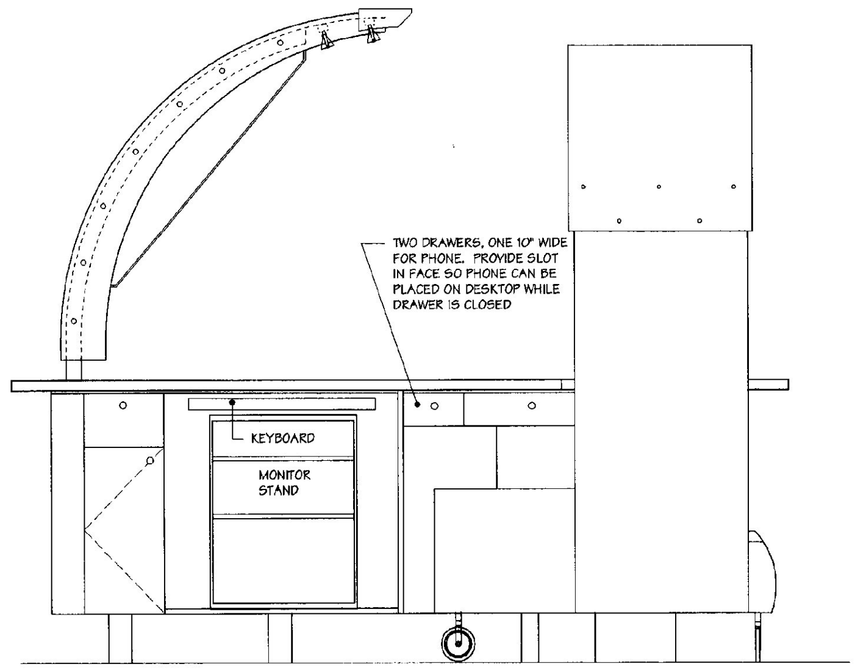

ELEVATION 1

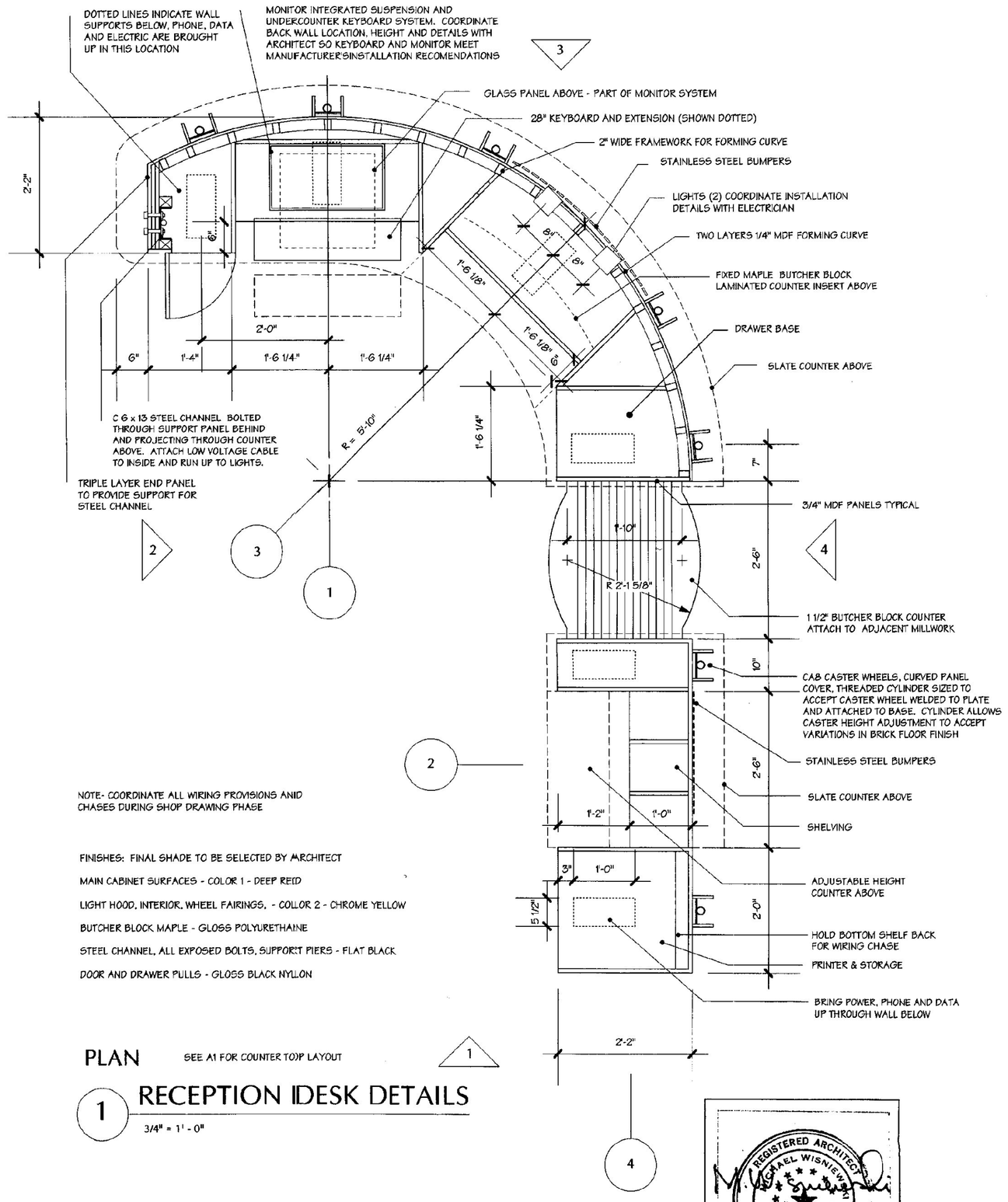

1 RECEPTION IDESK DETAILS

3/4" = 1' - 0"

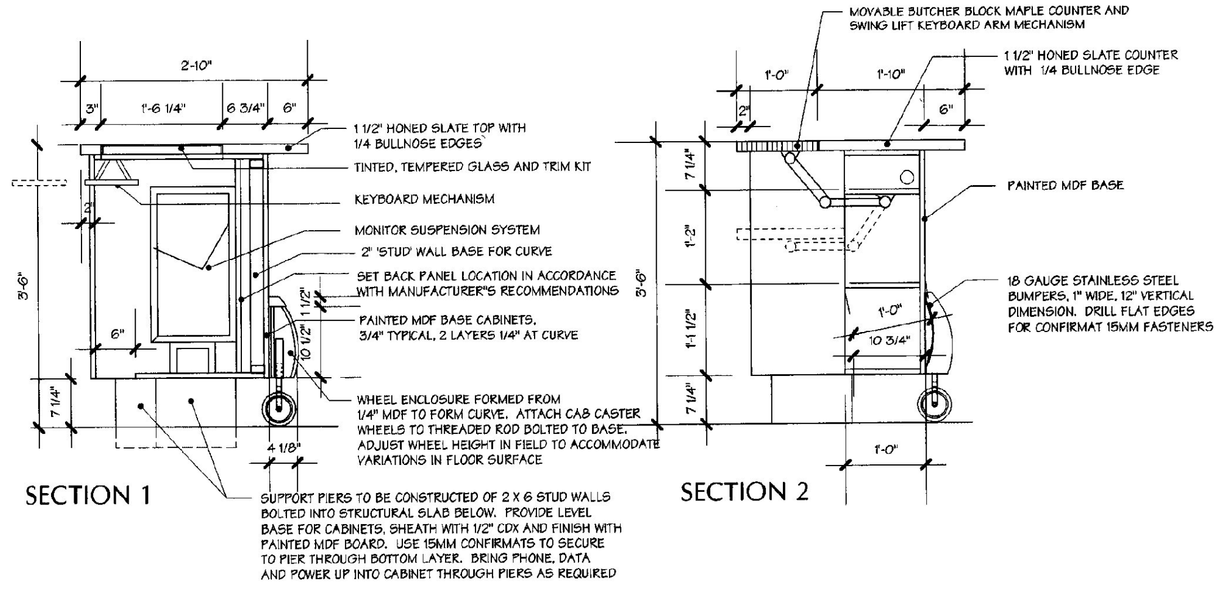

SECTION 1

SECTION 2

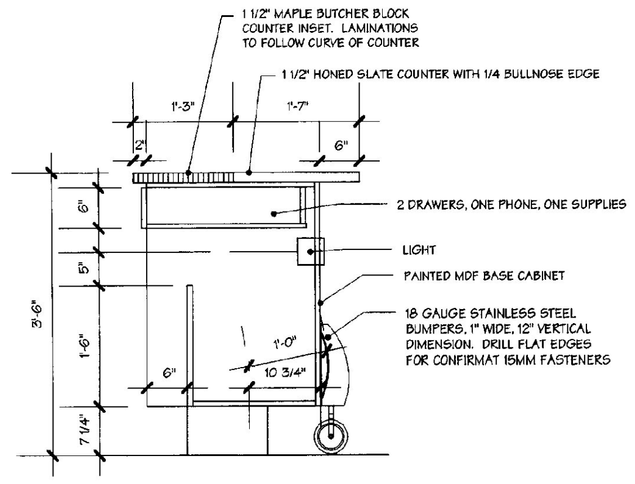

SECTION 3

REGISTERED ARCHITECT
DANIEL WISNIEWSKI
NO. 1202
STATE OF VERMONT

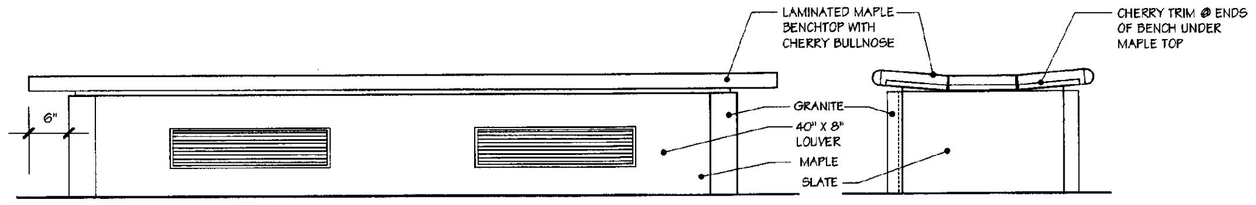

ELEVATION FROM WINDOW

ELEVATION- TYP END

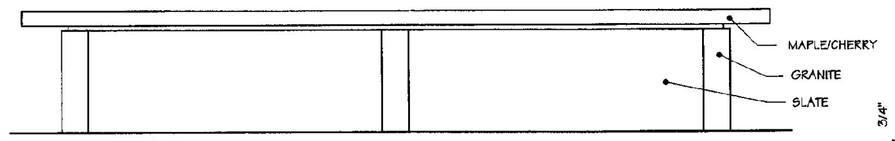

ELEVATION FROM MAIN ROOM

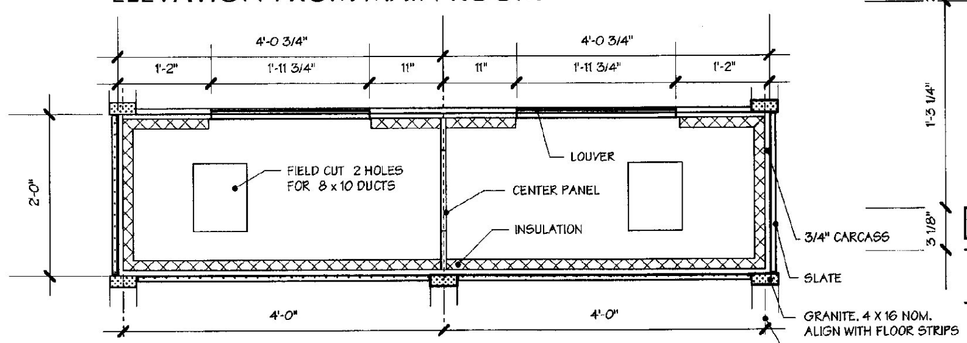

PLAN

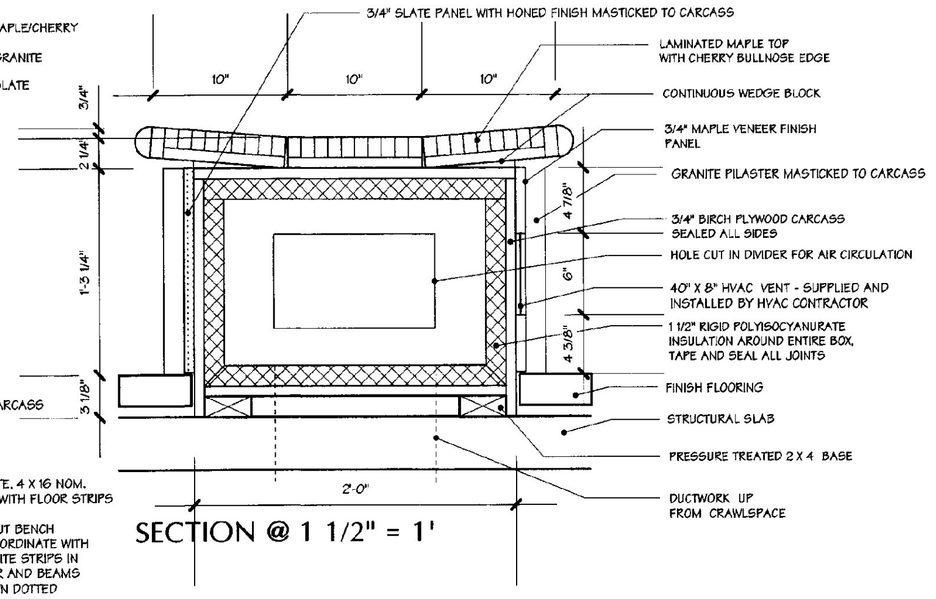

SECTION @ 1 1/2" = 1'

3 BENCH DETAILS

3/4" = 1' - 0"

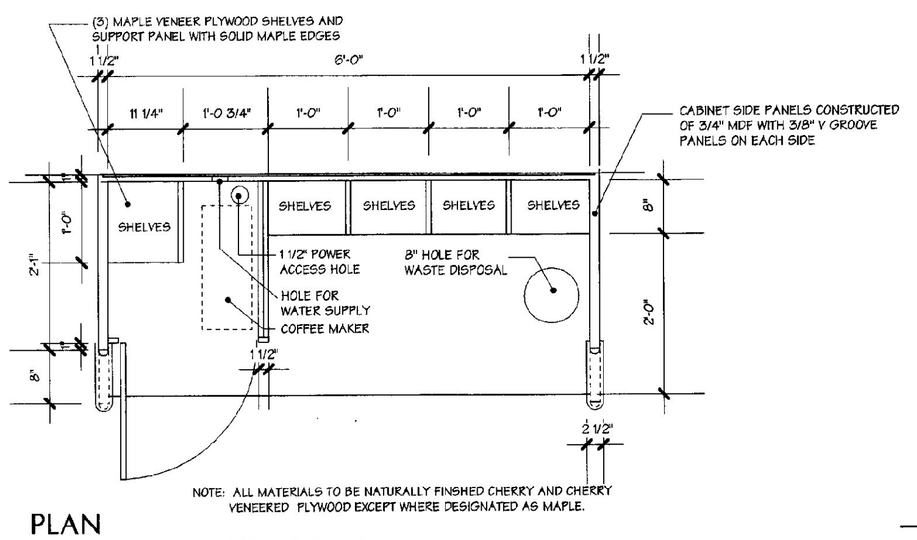

NOTE: ALL MATERIALS TO BE NATURALLY FINISHED CHERRY AND CHERRY VENEERED PLYWOOD EXCEPT WHERE DESIGNATED AS MAPLE.

PLAN

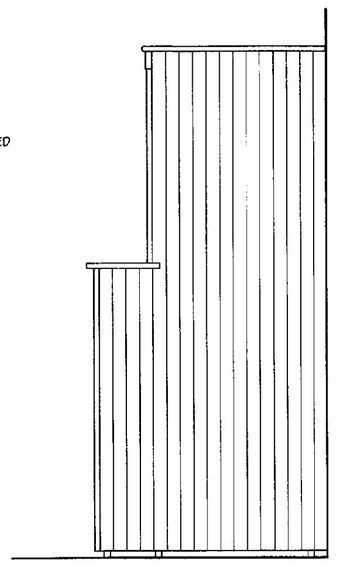

ELEVATION - TYPICAL SIDE

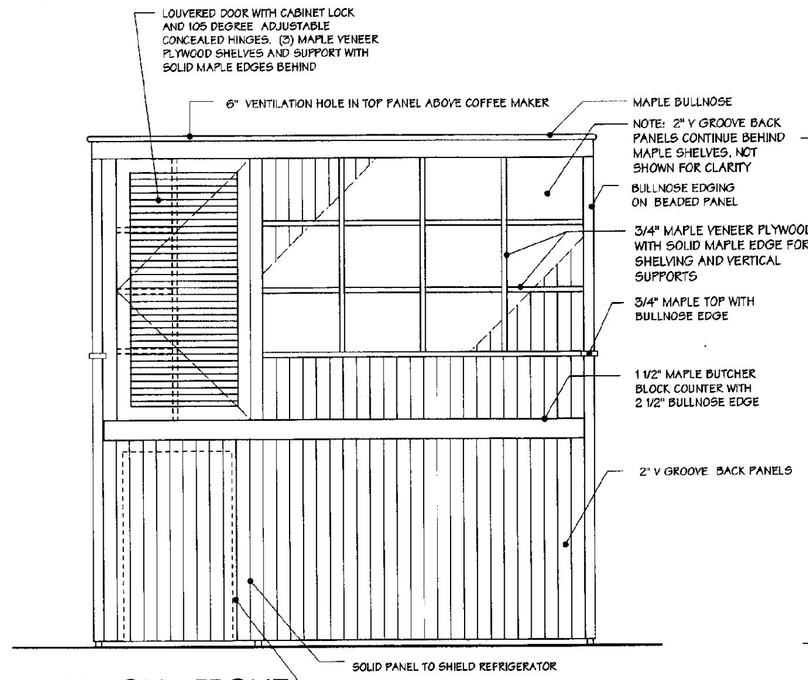

ELEVATION - FRONT

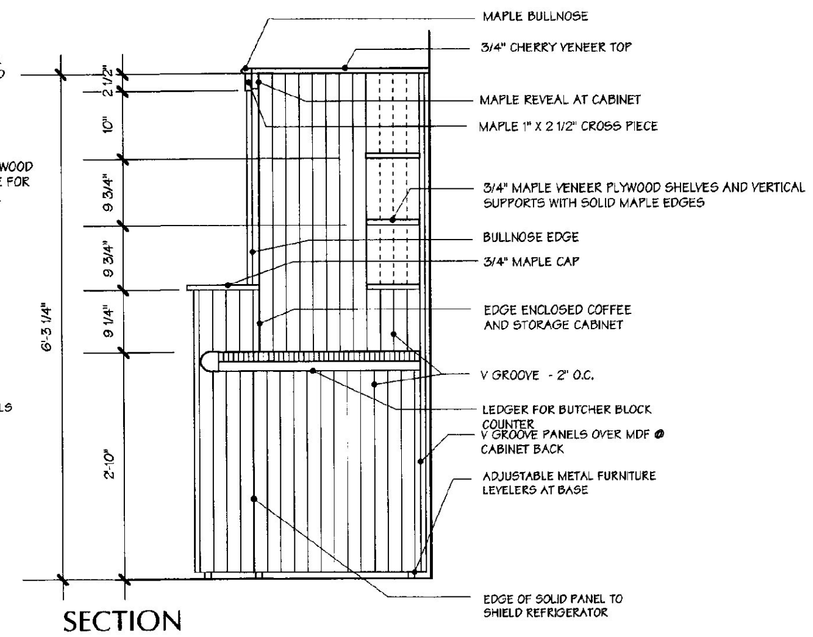

SECTION

1 COFFEE COUNTER

3/4" = 1' - 0"

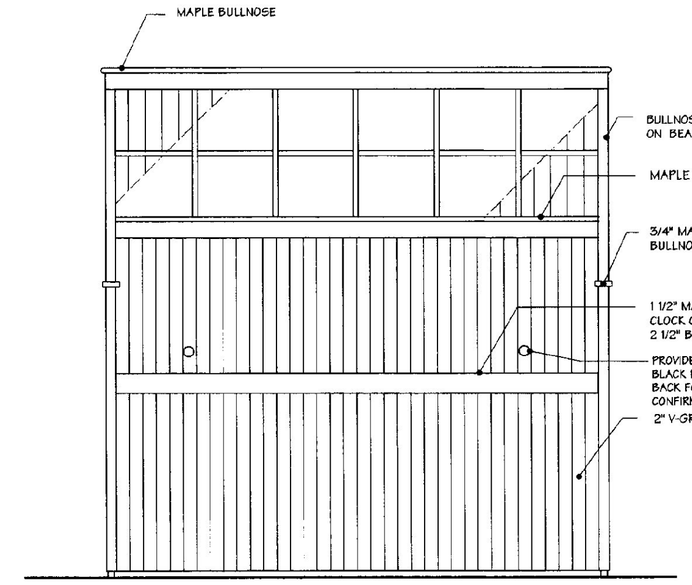

ELEVATION - FRONT

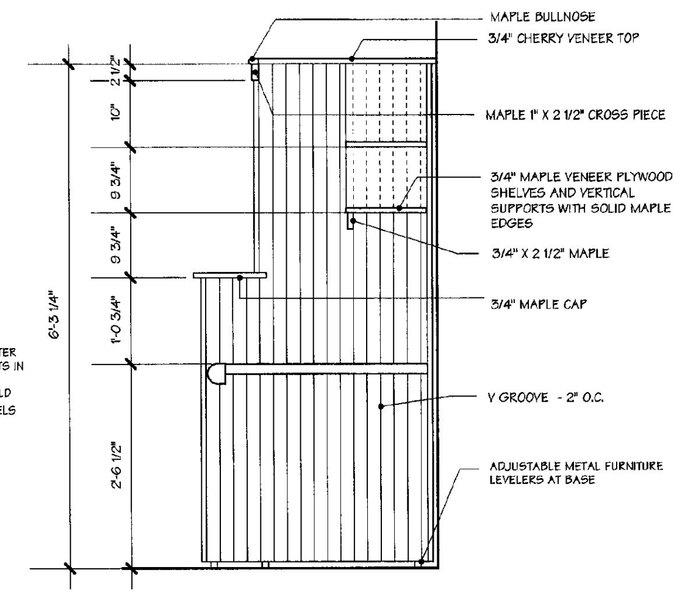

SECTION

4 COMPUTER/PHONE STATIONS

3/4" = 1' - 0"

NOTE: PLAN AND SIDE ELEVATION ARE SAME AS DETAIL 2

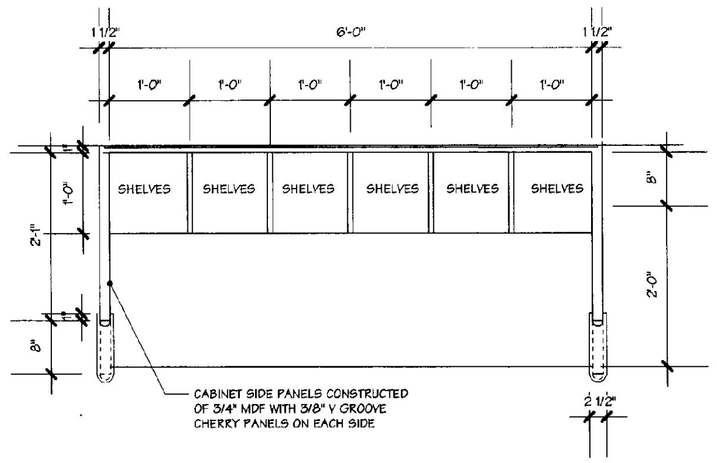

PLAN

NOTE: ALL MATERIALS TO BE NATURALLY FINISHED CHERRY AND CHERRY VENEERED PLYWOOD EXCEPT WHERE DESIGNATED AS MAPLE.

THIS PLAN AND SIDE ELEVATION ALSO APPLY TO DETAIL 4

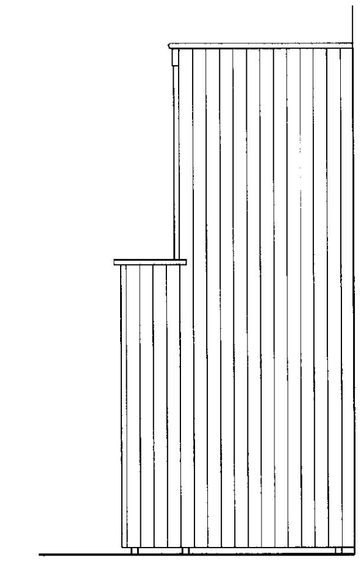

ELEVATION - TYPICAL SIDE

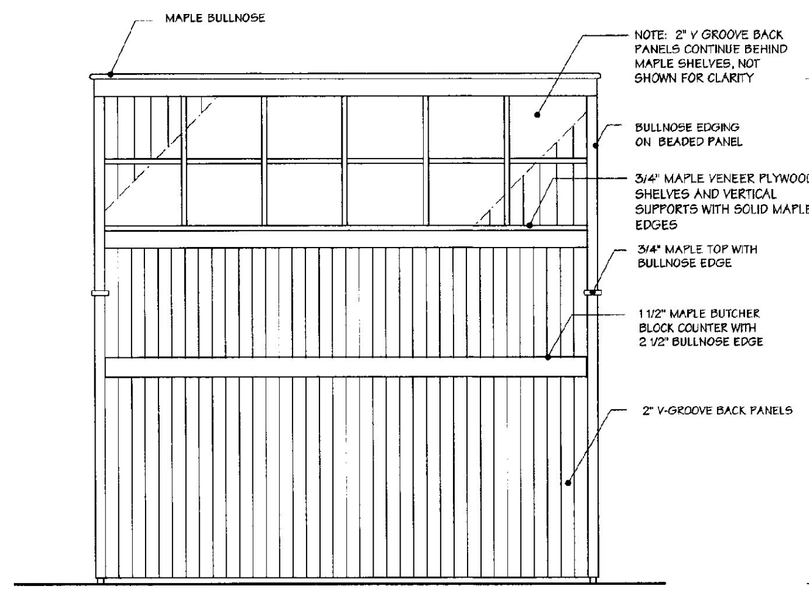

ELEVATION - FRONT

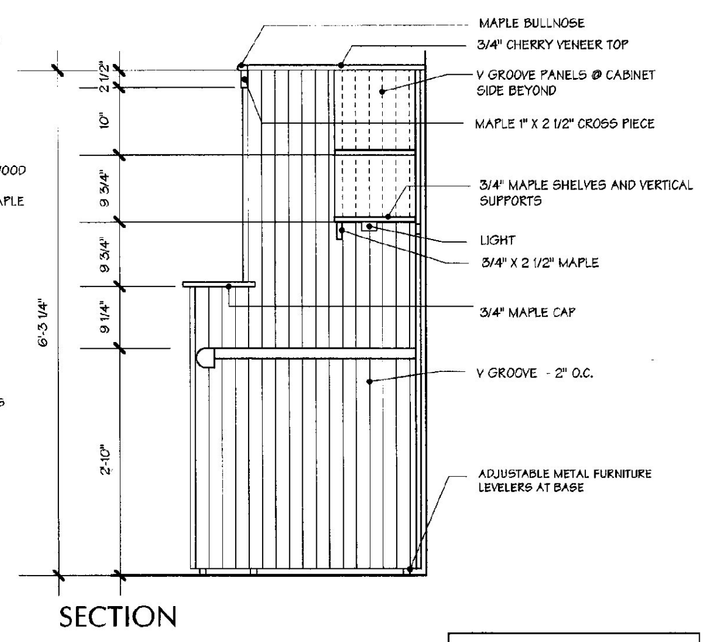

SECTION

2 RECEPTION - WORK DESK

3/4" = 1' - 0"

REGISTERED ARCHITECT
MICHAEL WISNIEWSKI
No. 1202
STATE OF VERMONT

JANUARY 16, 2001

WILLISTON INFORMATION CENTER I89 Southbound

Project #: IM - BLDG (4)

DUNCAN • WISNIEWSKI ARCHITECTURE ▪
255 SOUTH CHAMPLAIN STREET, BURLINGTON, VERMONT 05401 802.864.6693

A27sb

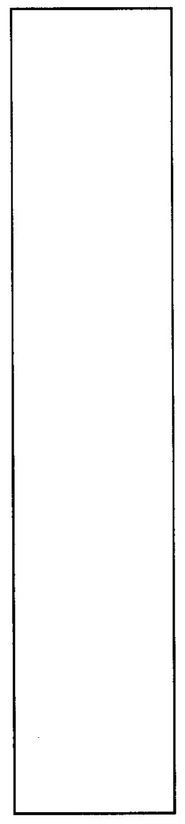

SECTION

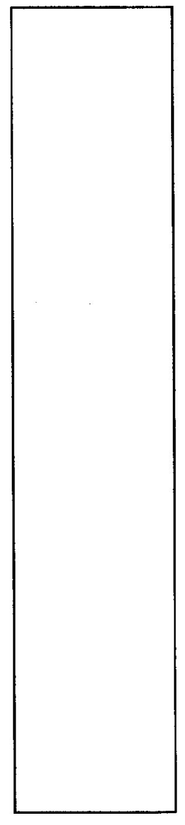

ELEVATION

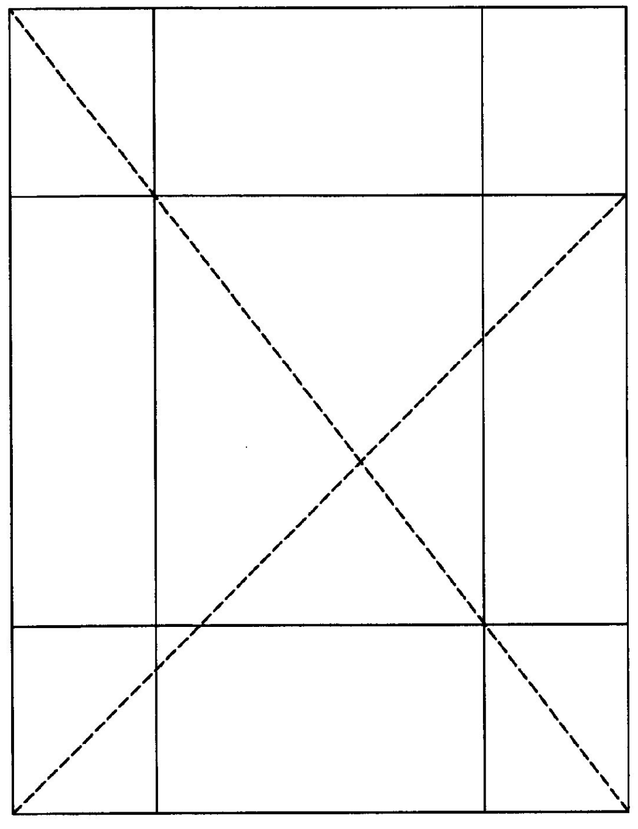

ELEVATION

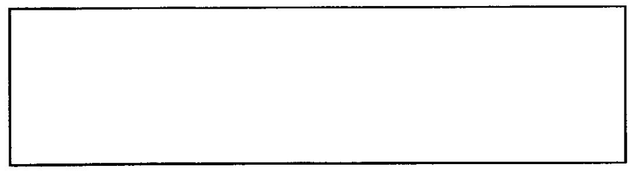

PLAN

1 MILLWORK DISPLAY UNITS 1

3/4" = 1' - 0" SEE ALLOWANCES

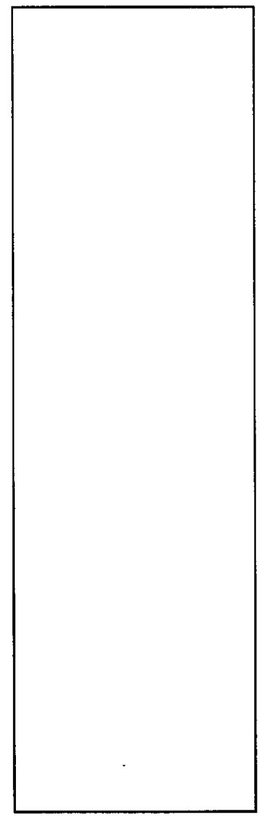

SECTION

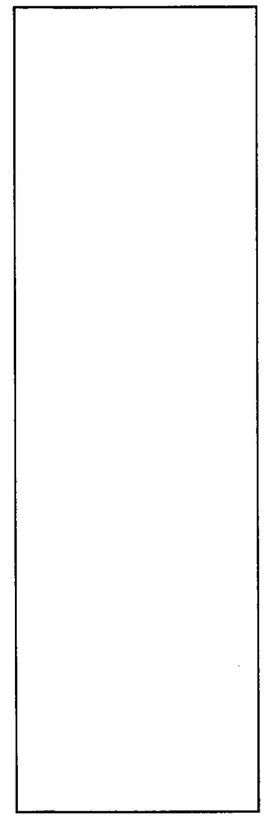

ELEVATION

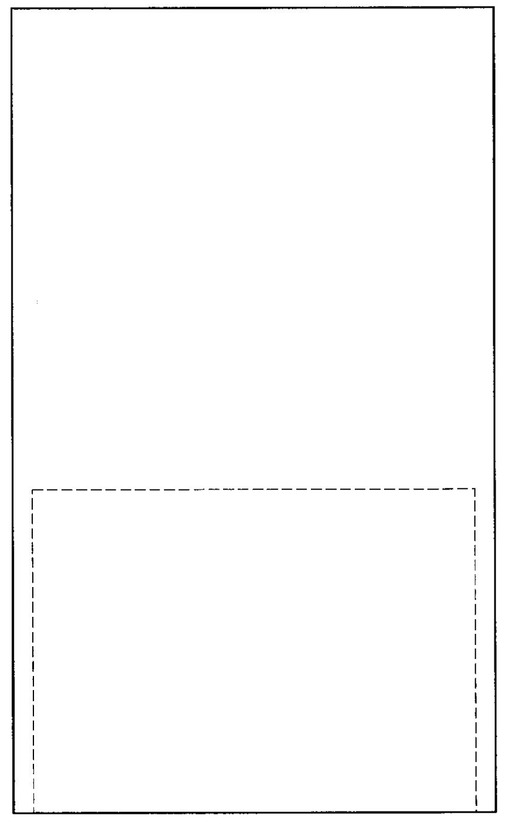

ELEVATION

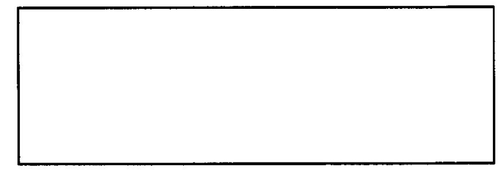

PLAN

2 MILLWORK DISPLAY UNIT 7

3/4" = 1' - 0" SEE ALLOWANCES

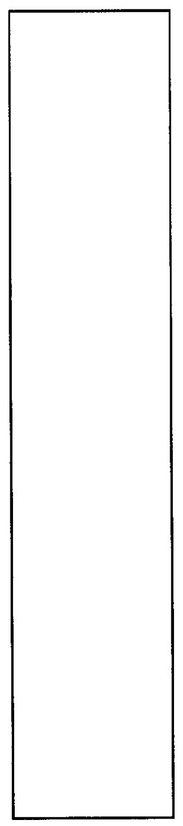

SECTION

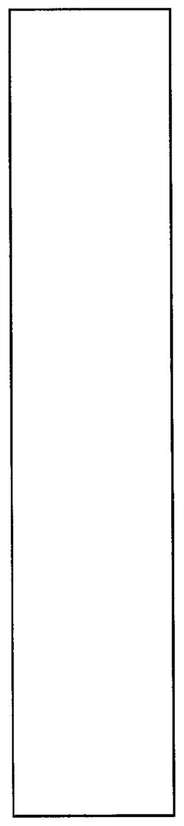

ELEVATION

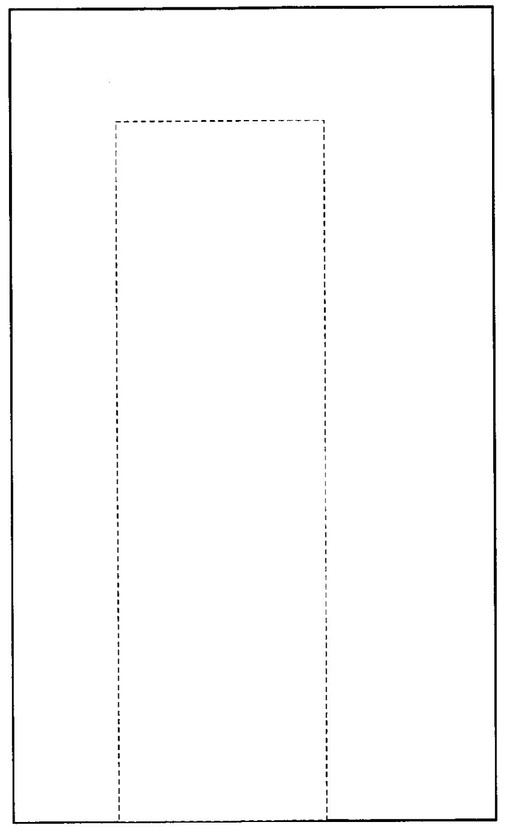

ELEVATION

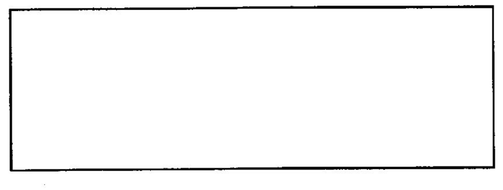

PLAN

3 MILLWORK DISPLAY UNIT 2

3/4" = 1' - 0" SEE ALLOWANCES

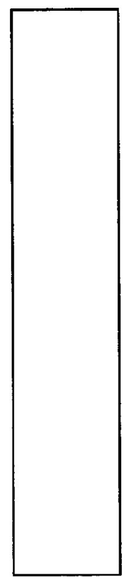

SECTION

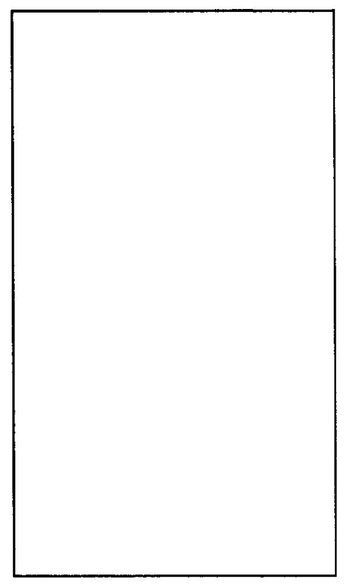

ELEVATION

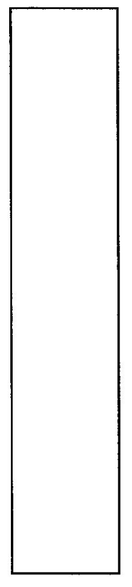

ELEVATION

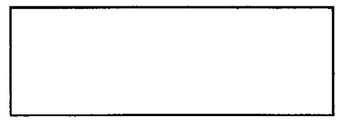

PLAN

4 MILLWORK DISPLAY UNIT 8

3/4" = 1' - 0" SEE ALLOWANCES

NOTE: THESE MILLWORK ITEMS ARE BY ALLOWANCE. THIS PAGE SHOWS THE APPROXIMATE OUTLINE AND SIZE OF INDIVIDUAL PIECES FOR FIGURING LABOR INSTALLATION ONLY

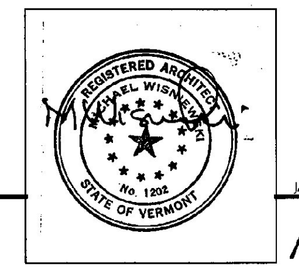

JANUARY 16, 2001

A28sb

WILLISTON INFORMATION CENTER I89 Southbound

Project #: IM - BLDG (4)

DUNCAN • WISNIEWSKI ARCHITECTURE ■
255 SOUTH CHAMPLAIN STREET, BURLINGTON, VERMONT 05401 802.864.6693

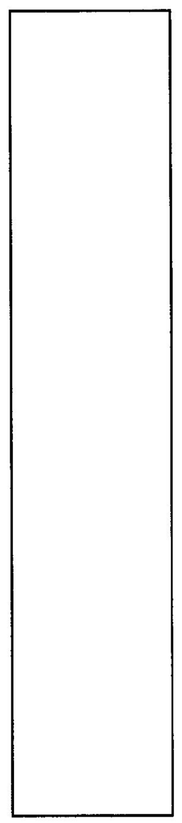

SECTION

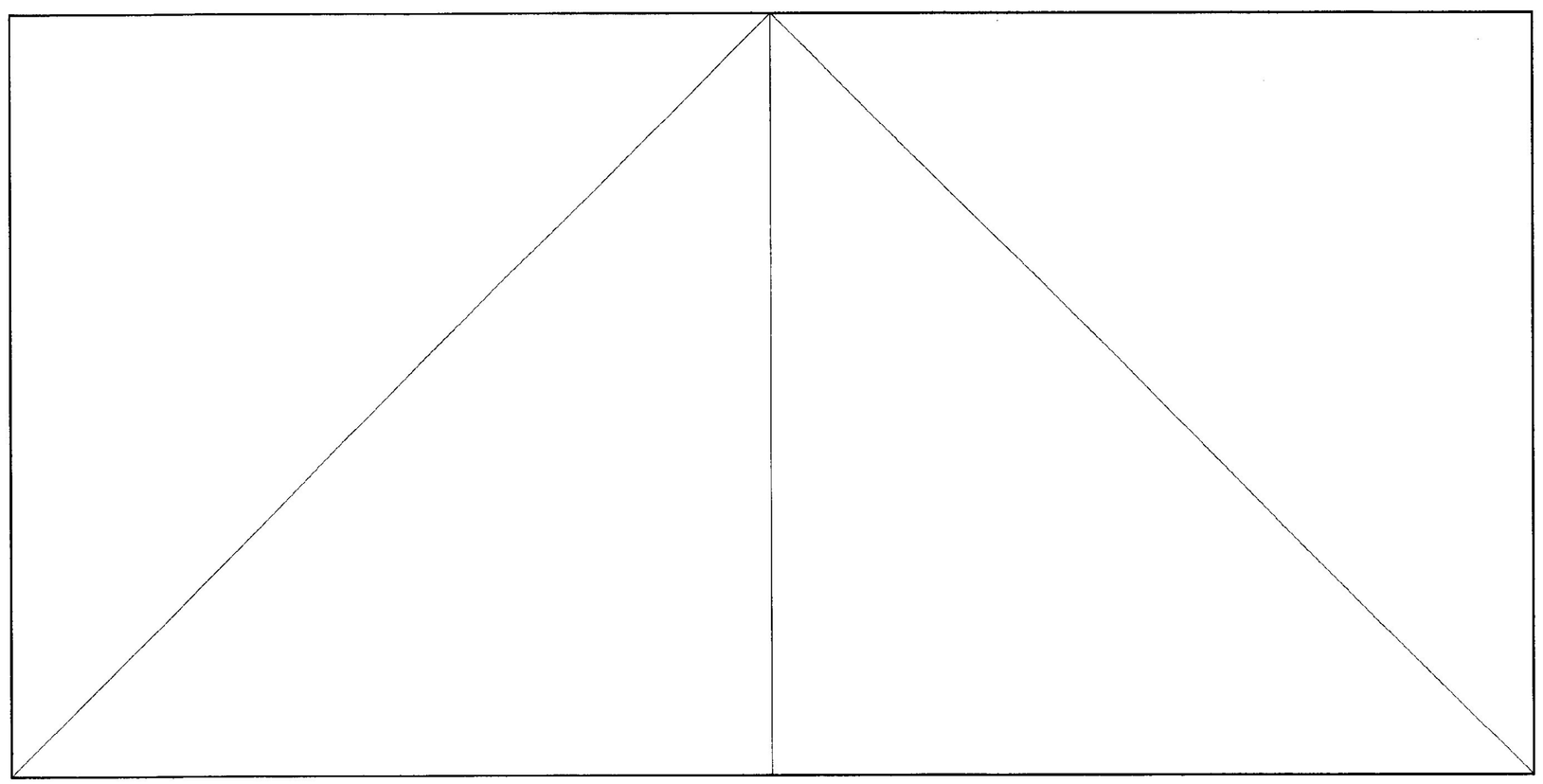

ELEVATION

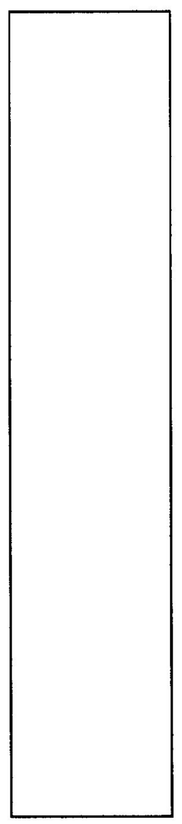

ELEVATION

1 MILLWORK DISPLAY UNIT 3

3/4" = 1' - 0"

SEE ALLOWANCES



PLAN

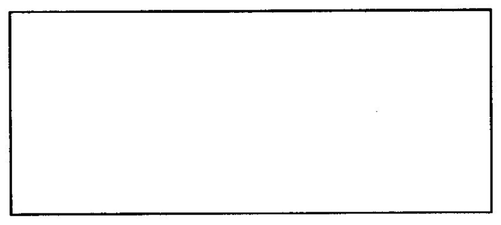

PLAN

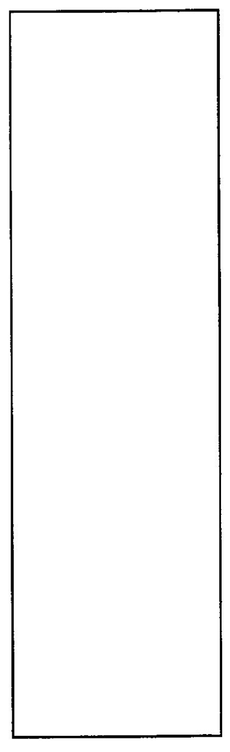

ELEVATION

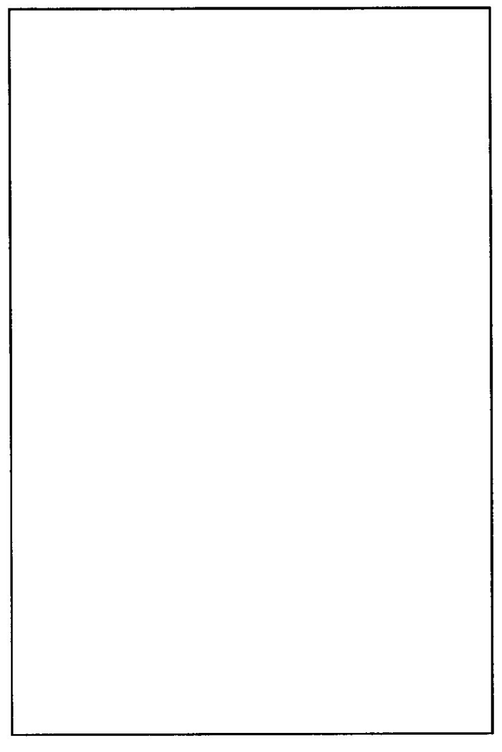

ELEVATION

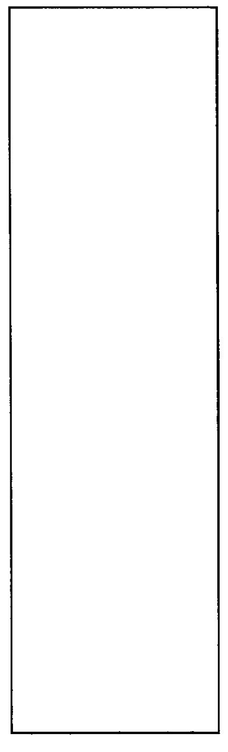

SECTION

2 MILLWORK DISPLAY UNITS 5 & 6

3/4" = 1' - 0"

SEE ALLOWANCES

NOTE: THESE MILLWORK ITEMS ARE BY ALLOWANCE. THIS PAGE SHOWS THE APPROXIMATE OUTLINE AND SIZE OF INDIVIDUAL PIECES FOR FIGURING LABOR INSTALLATION ONLY

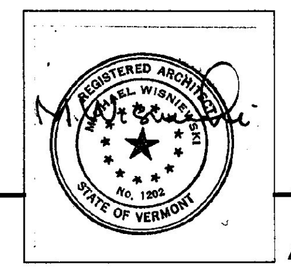

JANUARY 16, 2001

WILLISTON INFORMATION CENTER I89 Southbound

Project #: IM - BLDG (4)

DUNCAN • WISNIEWSKI ARCHITECTURE ■
255 SOUTH CHAMPLAIN STREET, BURLINGTON, VERMONT 05401 802.864.6693

A29sb

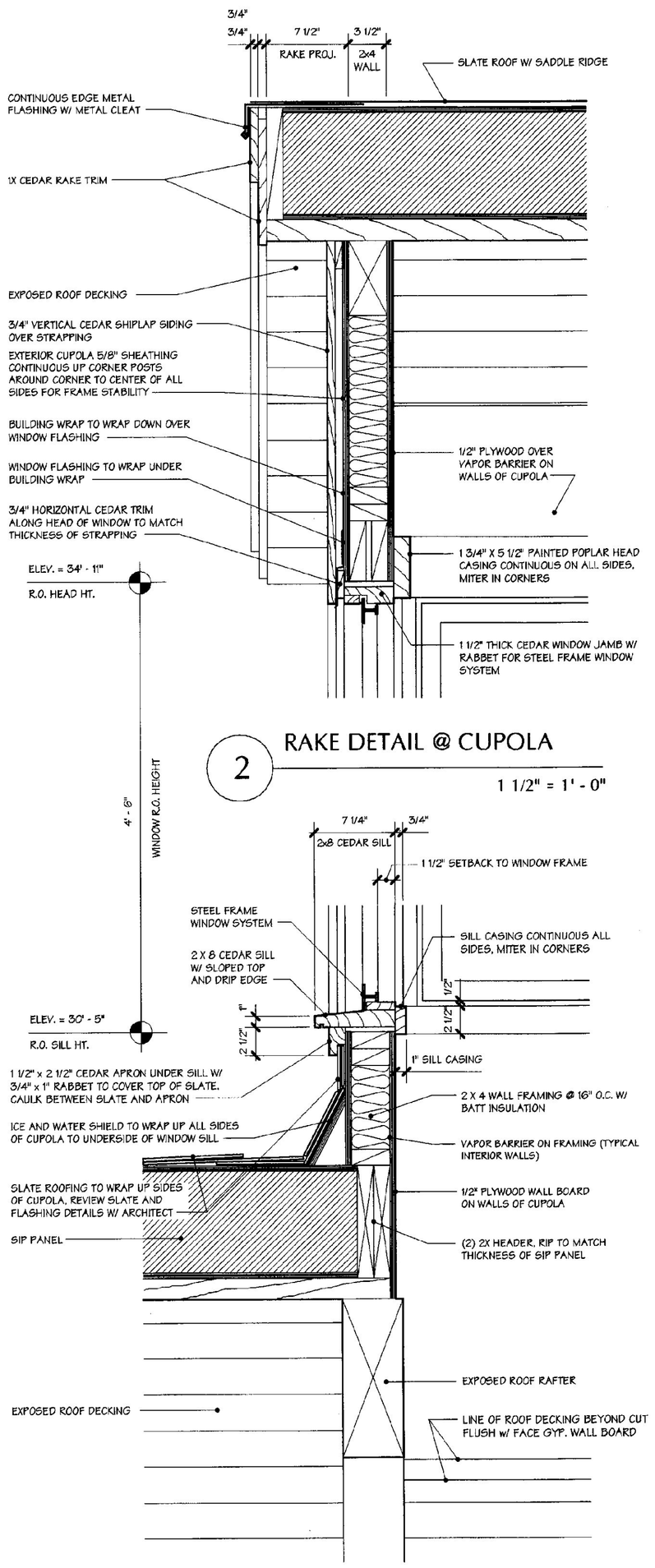

2 RAKE DETAIL @ CUPOLA

1 1/2" = 1' - 0"

1 RAKE WALL DETAIL @ CUPOLA

1 1/2" = 1' - 0"

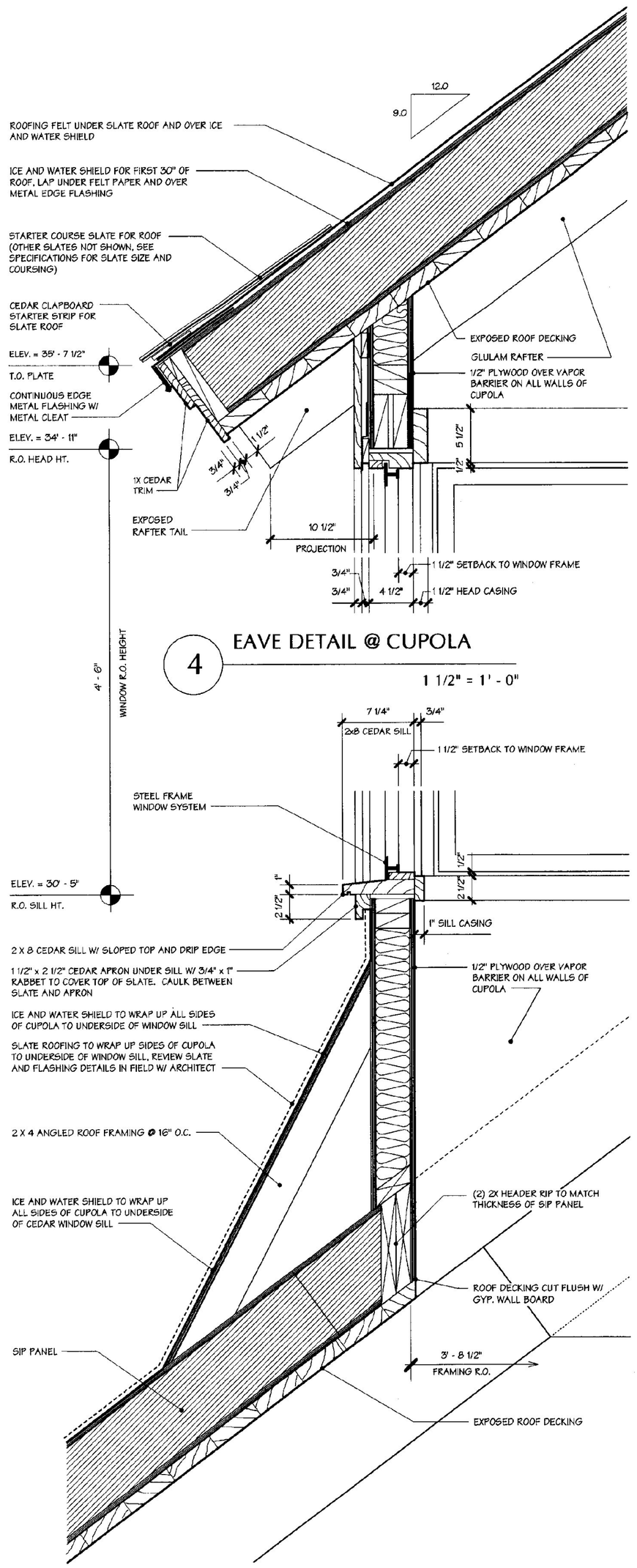

4 EAVE DETAIL @ CUPOLA

1 1/2" = 1' - 0"

3 SECTION DETAIL @ CUPOLA

1 1/2" = 1' - 0"

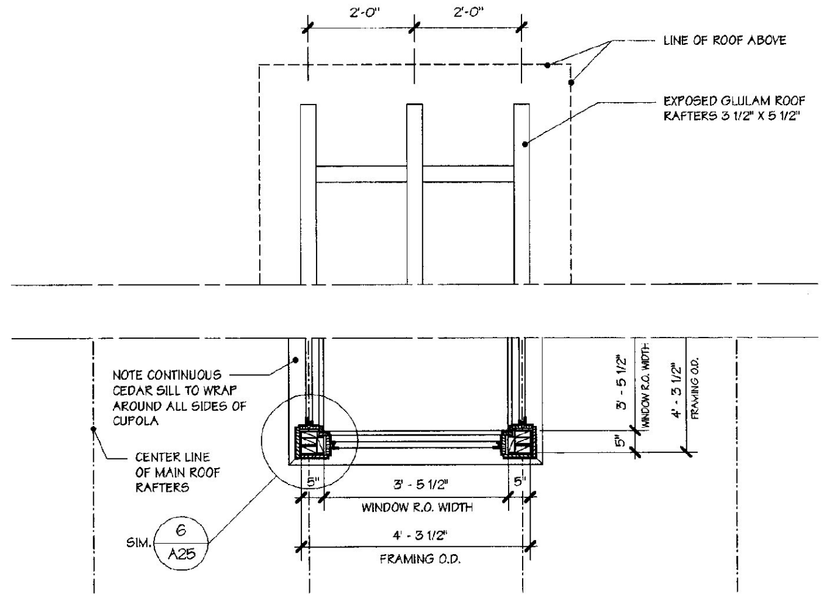

6 PLAN @ CUPOLA

1/2" = 1' - 0"

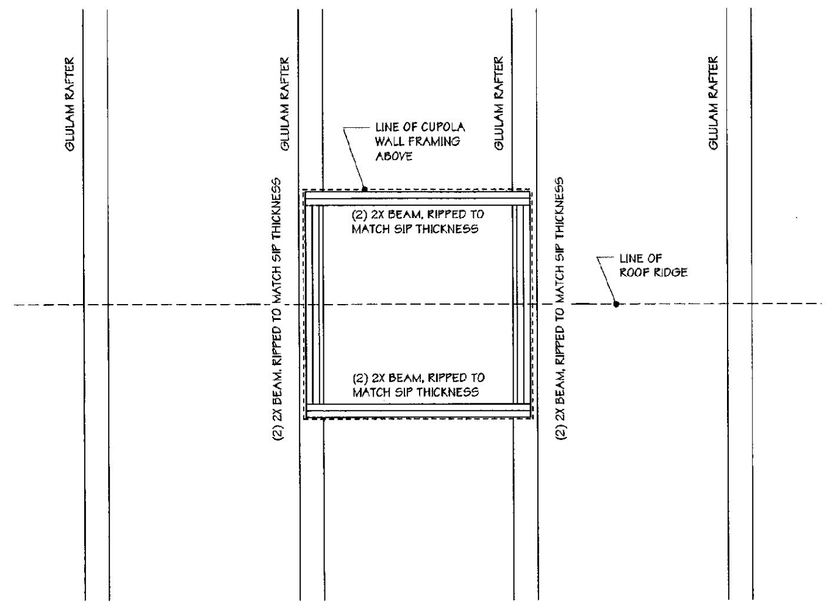

5 ROOF FRAMING PLAN @ CUPOLA

1/2" = 1' - 0"

WILLISTON INFORMATION CENTER I89 Southbound

Project #: IM - BLDG (4)

DUNCAN • WISNIEWSKI ARCHITECTURE ▪
255 SOUTH CHAMPLAIN STREET, BURLINGTON, VERMONT 05401 802.864.6693

REGISTERED ARCHITECT MICHAEL WISNIEWSKI No. 1202 STATE OF VERMONT

JANUARY 16, 2001

A30sb

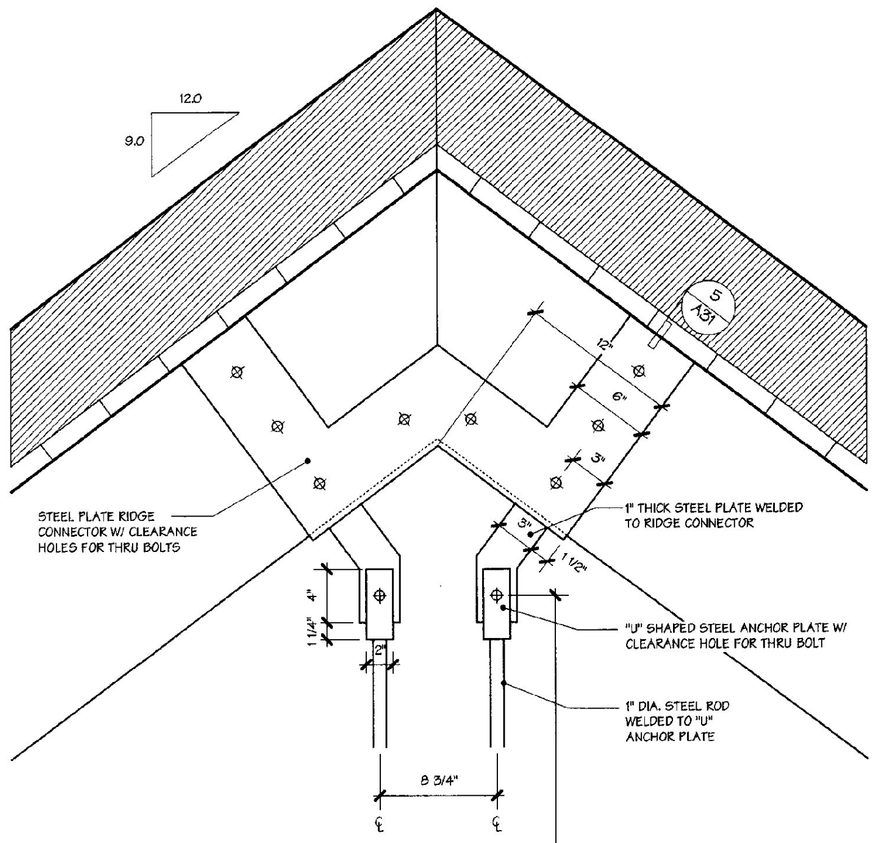

1 STEEL RIDGE CONNECTOR "A"

SEE S8 — 1 1/2" = 1' - 0"

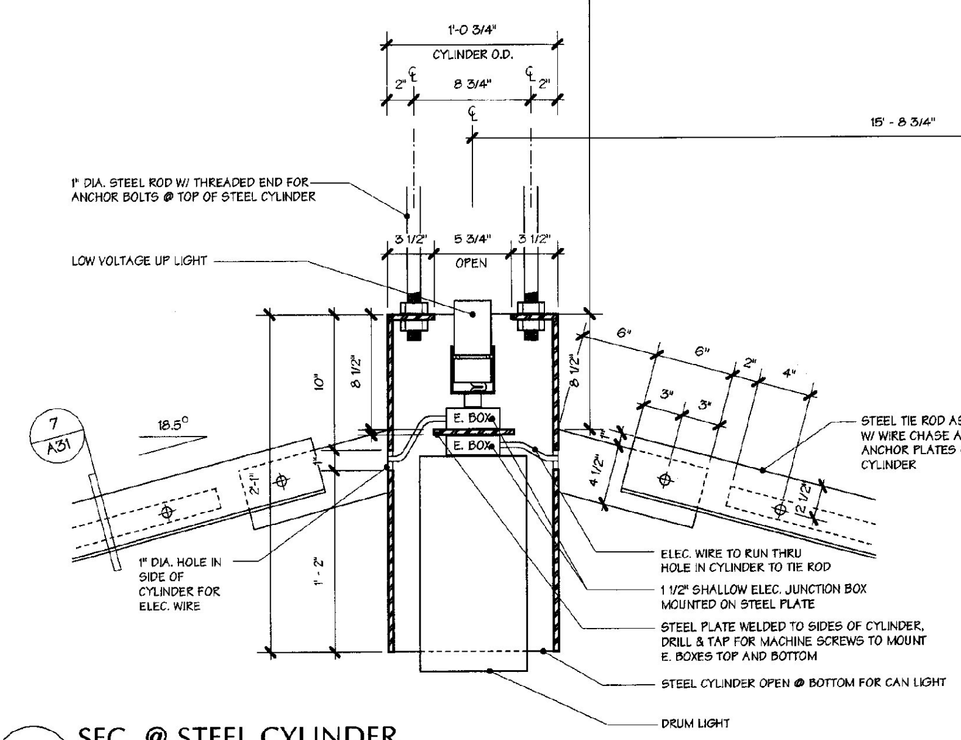

2 SEC. @ STEEL CYLINDER

SEE S8 — 1 1/2" = 1' - 0"

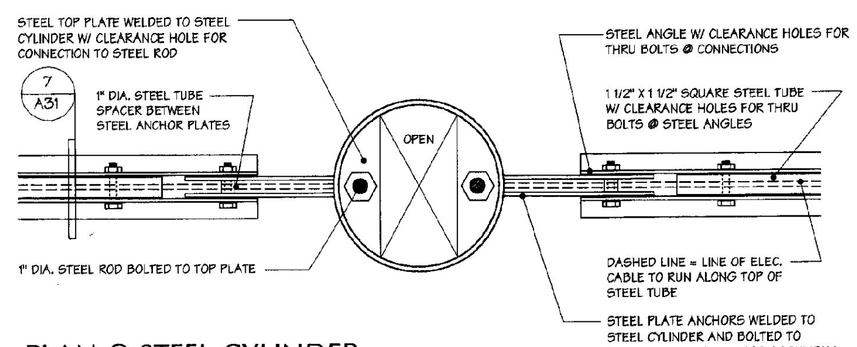

3 PLAN @ STEEL CYLINDER

SEE S8 — 1 1/2" = 1' - 0"

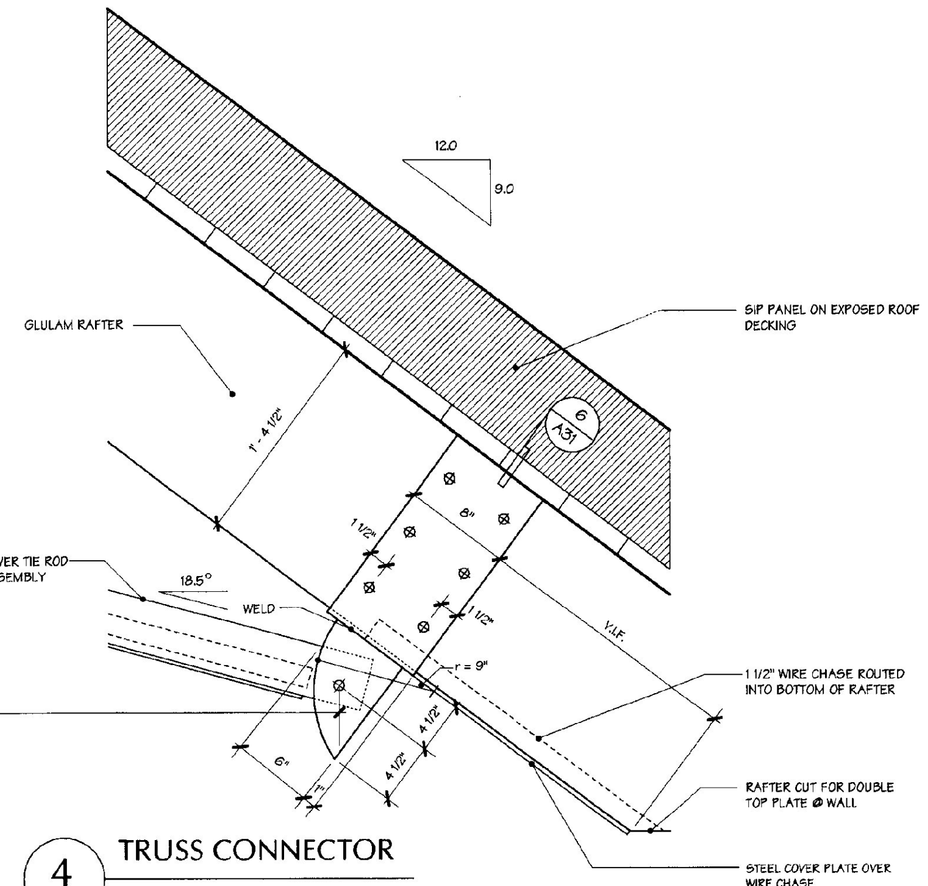

4 TRUSS CONNECTOR

SEE S8 — 1 1/2" = 1' - 0"

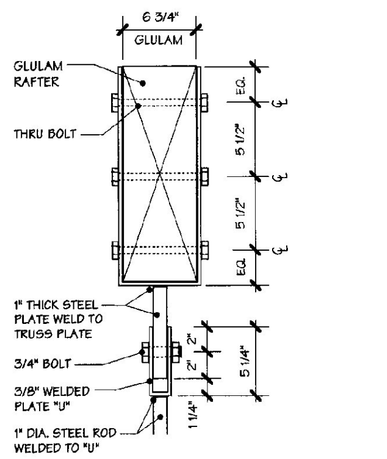

5 UPPER TRUSS JCT.

SEE S8 — 1 1/2" = 1' - 0"

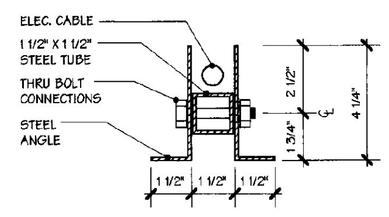

7 LOWER TIE ROD

SEE S8 — 3" = 1' - 0"

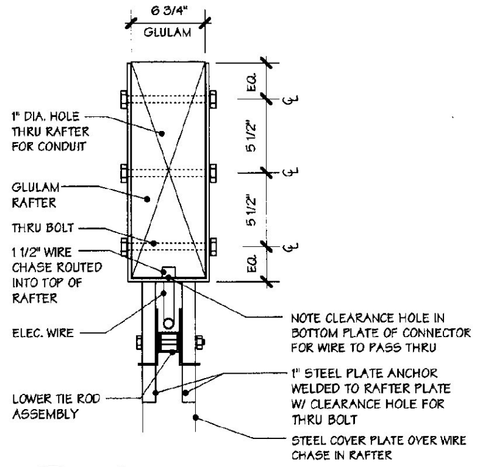

6 LOWER TRUSS JCT.

SEE S8 — 1 1/2" = 1' - 0"

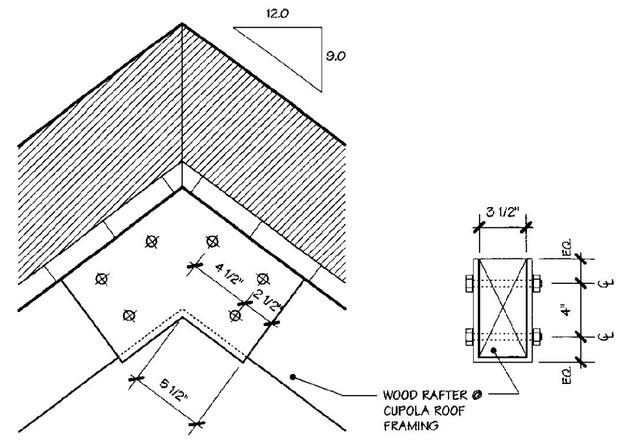

8 STEEL RIDGE "B" (CUPOLA)

NOTE- SMALLER SIZE STEEL RIDGE FOR SMALLER RAFTERS IN MECHANICAL CUPOLA — 1 1/2" = 1' - 0"

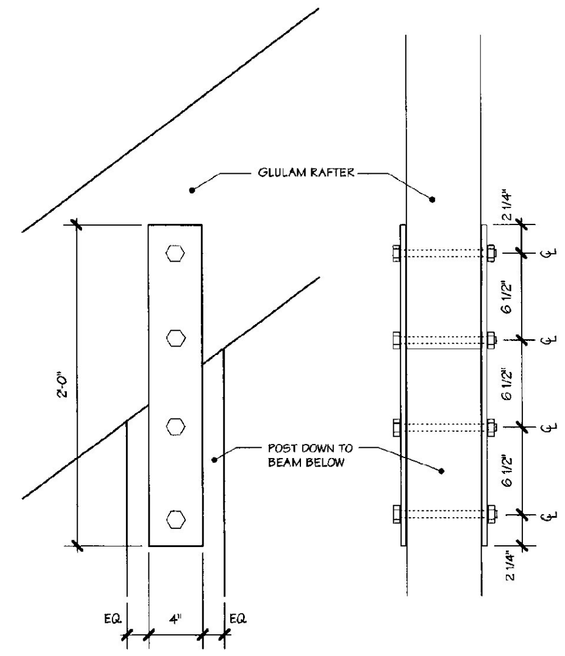

9 RAFTER BRACKET "A"

1 1/2" = 1' - 0"

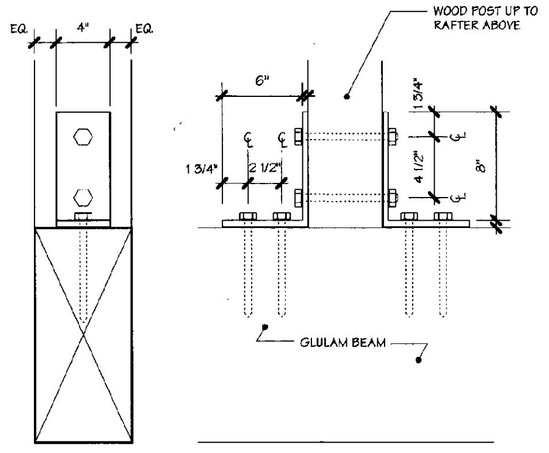

10 RAFTER BRACKET "B"

1 1/2" = 1' - 0"

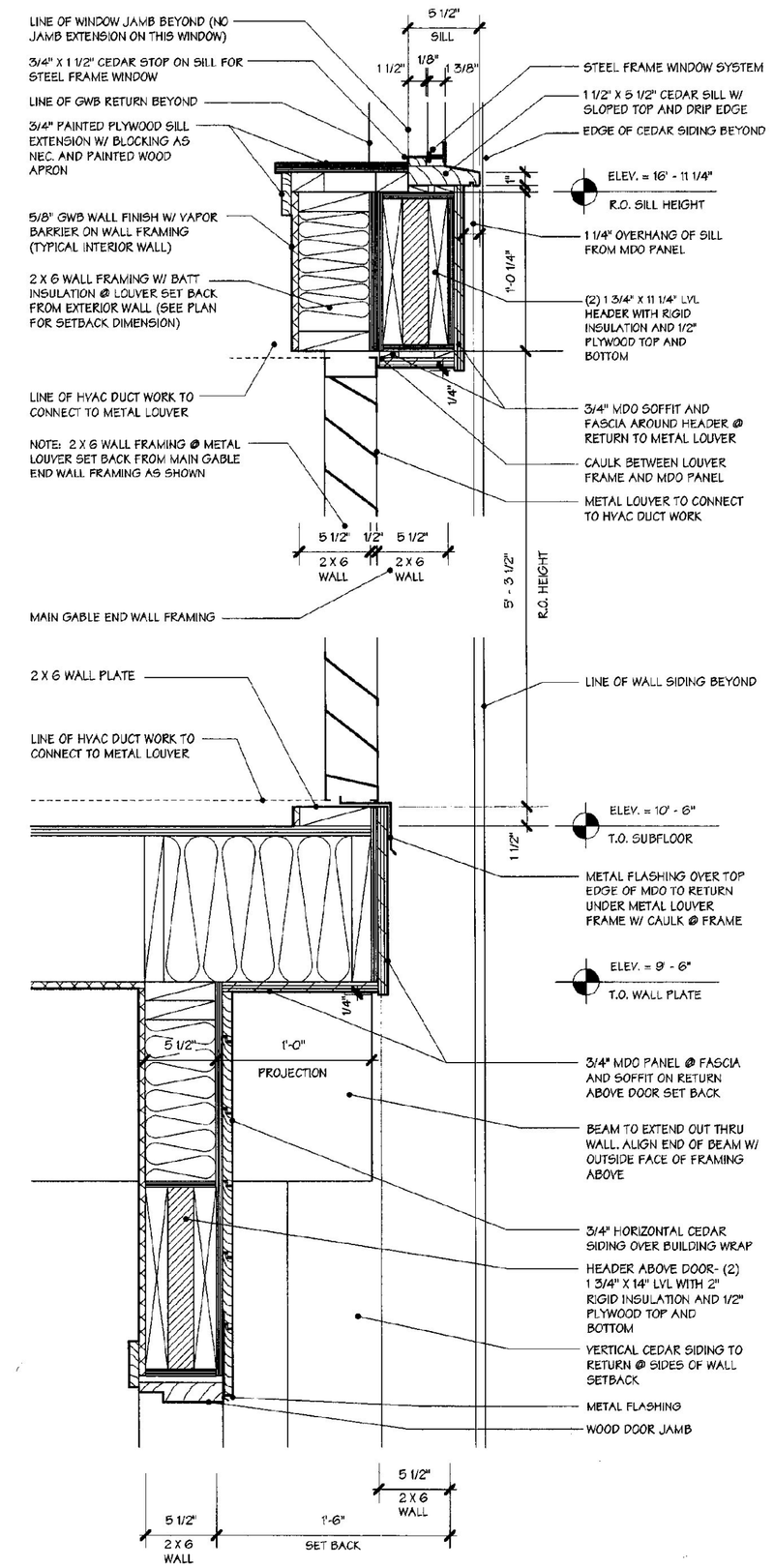

11 SECTION DETAIL @ SERVICE ENTRY

1 1/2" = 1' - 0"

REGISTERED ARCHITECT MICHAEL WISNIEWSKI No. 1209 STATE OF VERMONT

JANUARY 16, 2001

WILLISTON INFORMATION CENTER I89 Southbound

Project #: IM - BLDG (4)

DUNCAN • WISNIEWSKI ARCHITECTURE ▪
255 SOUTH CHAMPLAIN STREET, BURLINGTON, VERMONT 05401 802.864.6693

A31sb

DOOR SCHEDULE

DOOR #	SIZE	LABEL	DOOR ELEV	MATERIAL	FRAME ELEV	MATERIAL	DETAILS	HARDWARE SET	REMARKS
1A	PAIR 3073+/-		1	ST. STEEL/GLASS	1	1 5/8" PTD. STEEL	1 SIM.	01 - PUSH/PULL	FIELD VERIFY EXACT SIZE. ELECTRIC STRIKE & TIMER.
1B	PAIR 3073+/-		1	ST. STEEL/GLASS	1	1 5/8" PTD. STEEL	1 SIM.	06 - PUSH/PULL	FIELD VERIFY EXACT SIZE. ELECTRIC STRIKE & TIMER
2	PAIR SLIDING 3676+/-		2	CUSTOM WOOD/GLASS	2	5/4 WOOD	2,13	11 - BARN DOOR	FIELD VERIFY EXACT SIZE. TRANSOM ABOVE.
3	3468		3	SC WOOD	3	2" METAL	3	03 - RESTROOM	TRANSOM ABOVE
4	3468		3	SC WOOD	3	2" METAL	3	03 - RESTROOM	TRANSOM ABOVE
5	3468 + SIDELIGHT		3	SC WOOD	5	5/4 WOOD	7	04 - OFFICE	SIDELIGHT
6	3468		3	SC WOOD	2	5/4 WOOD	6	05 - CLASSROOM	PROVIDE LOUVER SIMILAR TO DOOR 4
7	3468		4	SC WOOD	2	5/4 WOOD	6	06 - PUSH/PULL/DEAD	GLASS LIGHT AND LOUVER
8	3468		4	SC WOOD	2	5/4 WOOD	6	06 - PUSH/PULL/DEAD	GLASS LIGHT AND LOUVER
9	3468		4	SC WOOD	2	5/4 WOOD	6	06 - PUSH/PULL/DEAD	GLASS LIGHT AND LOUVER
10	3468		3	SC WOOD	2	5/4 WOOD	6	05 - CLASSROOM	
11	3468	B - 3/4 HR	5	FLUSH METAL	4	2" METAL	4	07 - PASSAGE	
12	4068	B - 1 1/2 HR	5	FLUSH METAL	4	2" METAL	5	07 - PASSAGE	
13	PAIR OF 3668		5	INSUL. FLUSH METAL	2	5/4 WOOD	12 - A22	08 - STOREROOM	ACTIVE/PASSIVE LEAF, ELECTRIC STRIKE, CARDREADER
14	PAIR OF 3068		5	INSUL. FLUSH METAL	2	5/4 WOOD	11 - A6	09 - CLASSROOM	ACTIVE/PASSIVE LEAF
15	2868		5	INSUL. FLUSH METAL	2	5/4 WOOD	11 - A6 SIM	10 - CLASSROOM	
16	12070 OVERHEAD DOOR								

NOTE- DOORS 1A & 1B DOOR AND FRAME PROVIDED UNDER STEEL DOOR & WINDOW SECTION

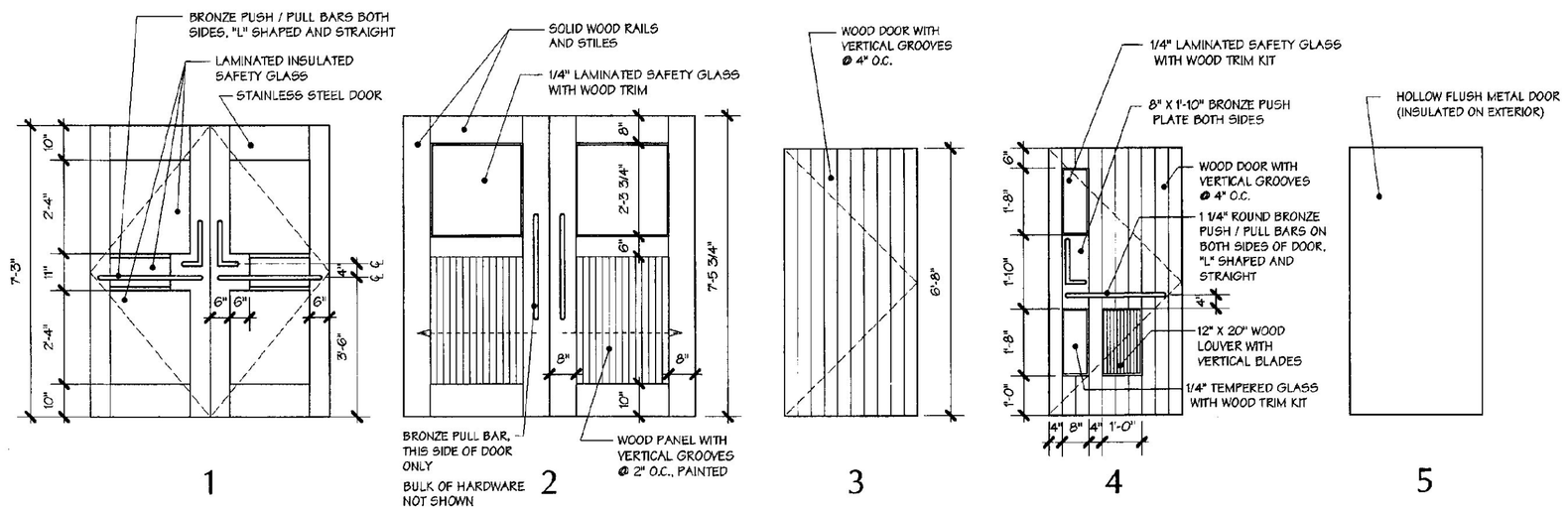

1 2 3 4 5

ROOM FINISH SCHEDULE

NOTE: EXTERIOR WALLS HAVE 1/2" SHEATHING INSTEAD OF GB

ROOM #	NAME	FLOOR	BASE	WALLS	CEILING	REMARKS
1A	VESTIBULE	METAL GRID w/ GRANITE ACCENT/BRICK	WD	VERTICAL SHIPLAP WOOD 6" OC/FURRING/1/2" GB	EXPOSED BEAMS/WOOD DECKING	
1B	ENTRY	BRICK w/ GRANITE ACCENT	WD/MTL	VERTICAL SHIPLAP WOOD 6" OC/FURRING/1/2" GB	EXPOSED BEAMS/WOOD DECKING	
2	WC 1	12 X 12 TILE	TILE COVE	6X8 TILE/1/2" BACKER BD	SHIPLAP WOOD 6" O.C.	
3	WC 2	12 X 12 TILE	TILE COVE	6X8 TILE/1/2" BACKER BD	SHIPLAP WOOD 6" O.C.	
4	INFORMATION	BRICK w/ GRANITE ACCENT	7 1/2" WOOD	VERTICAL SHIPLAP WOOD 6" OC/FURRING/1/2" GB	EXPOSED TRUSSES/WOOD DECKING	
5	OFFICE	SHEET LINOLEUM	4" WOOD	5/8" PGB/HORIZONTAL WD ON BACK WALL	EXPOSED BEAMS/WOOD DECKING	
6	HALL 1	BRICK w/ GRANITE ACCENT	WOOD	HORIZONTAL SHIPLAP WOOD 6" OC/1/2" GB	SHIPLAP WOOD 6" O.C./WOOD DECKING/BEAMS	VERTICAL WOOD ON COMMON WALL WITH INFORMATION
7	JANITOR	SEALED CONCRETE TOPPING SLAB	TILE/WOOD	6X8 TILE TO 4'-8"/1/2" BACKER BD/5/8" PGB	EXPOSED BEAMS/WOOD DECKING	
8	WOMEN	12 X 12 TILE	TILE COVE	6X8 TILE/1/2" BACKER BD HORIZ SHIPLAP 6" O.C./1/2" GB	EXPOSED BEAMS/WOOD DECKING	
9	HALL 2	SHEET LINOLEUM	4" WOOD	5/8" PGB/ PLYWD ACCESS PANELS	5/8" PGB	1/2" PGB ON DOOR TO WALL
10	FLEX	12 X 12 TILE	TILE COVE	6X8 TILE/1/2" BACKER BD HORIZ SHIPLAP 6" O.C./1/2" GB	SHIPLAP WOOD 6" O.C.	
11	MEN	12 X 12 TILE	TILE COVE	6X8 TILE/1/2" BACKER BD HORIZ SHIPLAP 6" O.C./1/2" GB	EXPOSED BEAMS/WOOD DECKING	
12	MECHANICAL	SEALED SLAB	4" WOOD	5/8" FIRETAPED GB	EXPOSED BEAMS/WOOD DECKING	
13	OIL	SEALED SLAB	CONC CURB	5/8" FIRETAPED GB - 2 LAYERS	5/8" FIRETAPED GB - 4 LAYERS	CEILING: 2 LAYERS GB, 1 1/2" WOOD SPACER, 2 LAYERS GB
14	WORK AREA	SHEET LINOLEUM	4" WOOD	5/8" PGB	5/8" PGB	NATURAL FINISH ON EXPOSED GLULAM BEAM
15	STAFF	SHEET LINOLEUM	4" WOOD	5/8" PGB	EXPOSED BEAMS/WOOD DECKING	
16	AIR 1	PTD. PLYWOOD SHEATHING	NONE	5/8" FIRETAPED GB	EXPOSED BEAMS/WOOD DECKING	
17	AIR 2	PTD.PLYWOOD SHEATHING	NONE	5/8" FIRETAPED GB	UNFINISHED OSB SIP PANEL	
ELEV. BLDG.		SEALED CONCRETE	CONC. WALL	1/2" PLYWOOD	N.A.	SEE A6

PGB = PAINTED GYPSUM BOARD GB = GYPSUM BOARD

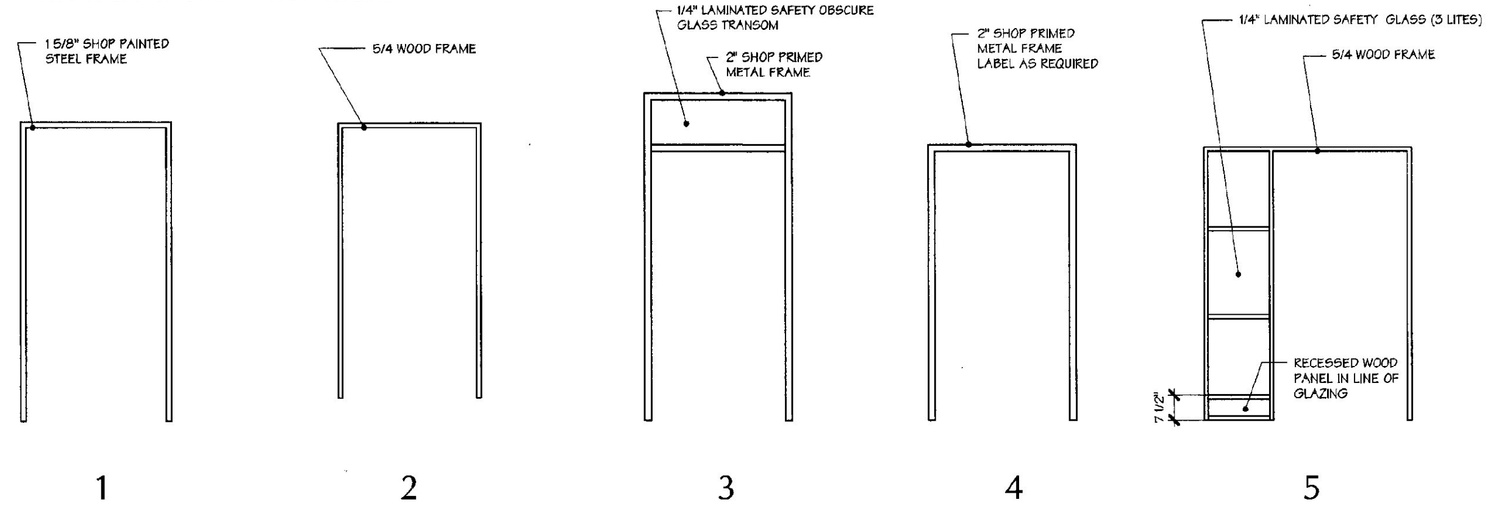

1 2 3 4 5

DOOR ELEVATIONS

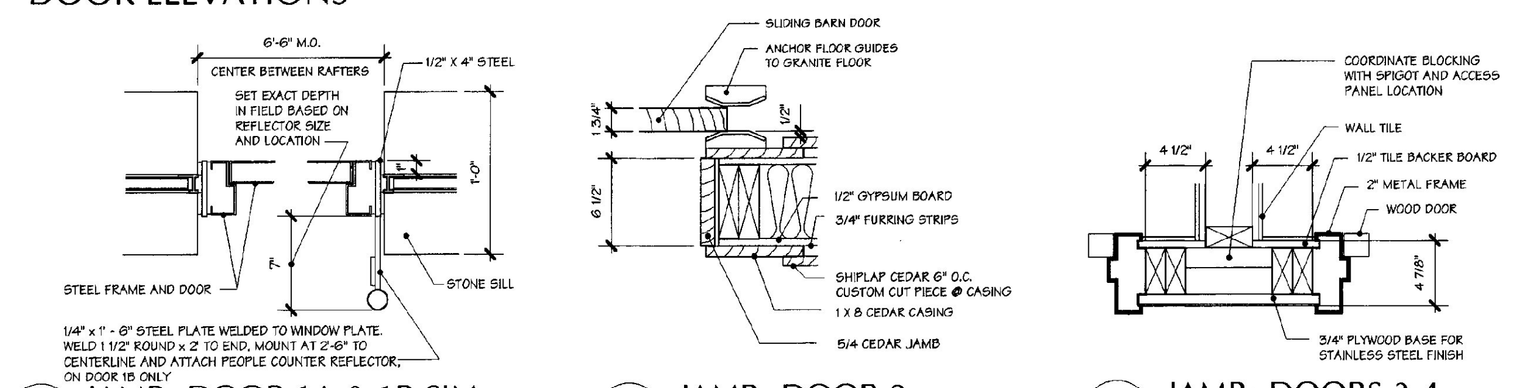

1 JAMB: DOOR 1A & 1B SIM. — 1 1/2" = 1' - 0"

2 JAMB: DOOR 2 — 1 1/2" = 1' - 0"

3 JAMB: DOORS 3,4 — 1 1/2" = 1' - 0" HEAD SIMILAR

FRAME ELEVATIONS

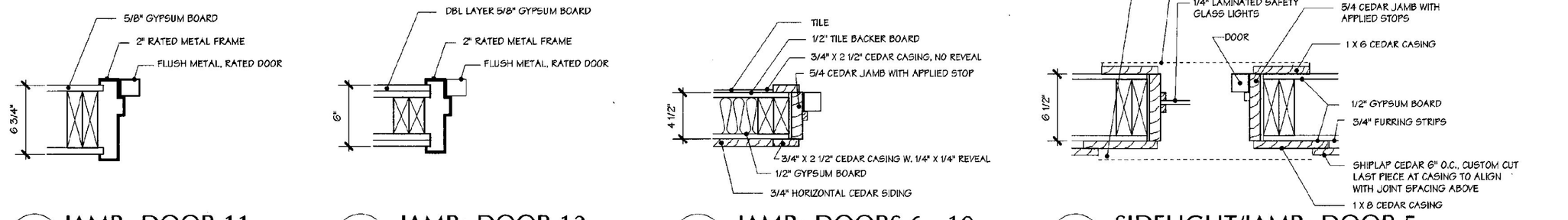

4 JAMB: DOOR 11 — 1 1/2" = 1' - 0" HEAD SIMILAR

5 JAMB: DOOR 12 — 1 1/2" = 1' - 0" HEAD SIMILAR

6 JAMB: DOORS 6 - 10 — 1 1/2" = 1' - 0"

7 SIDELIGHT/JAMB: DOOR 5 — 1 1/2" = 1' - 0"

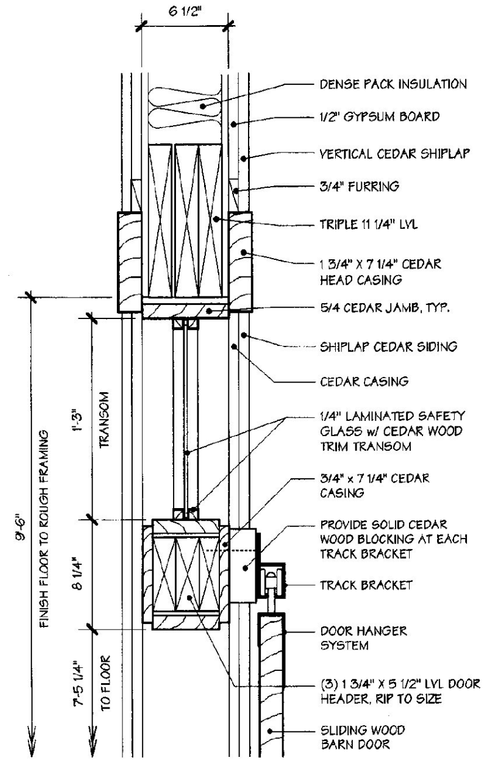

13 HEAD DETAIL @ DOOR 2 — 1 1/2" = 1' - 0"

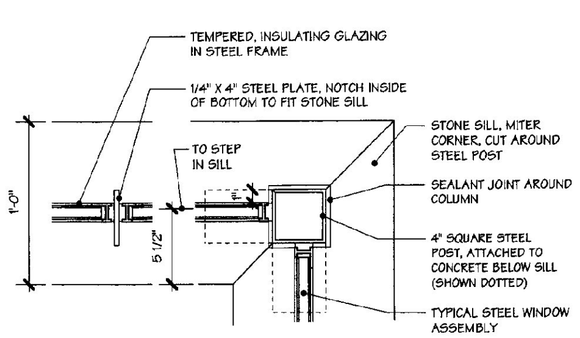

8 TYP WINDOW CORNER/MULLION — 1 1/2" = 1' - 0"

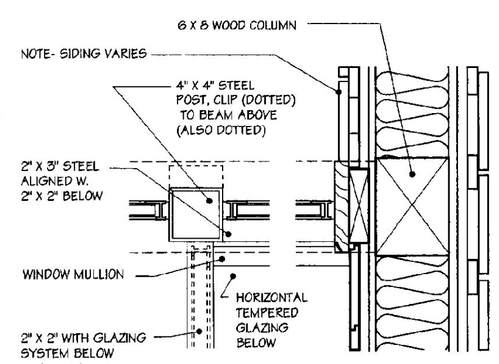

9 CORNER ABOVE — 1 1/2" = 1' - 0"

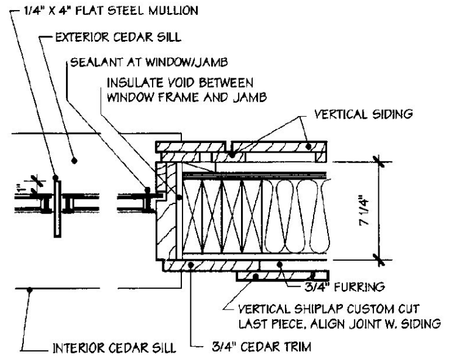

10 TYP WINDOW JAMB — 1 1/2" = 1' - 0"

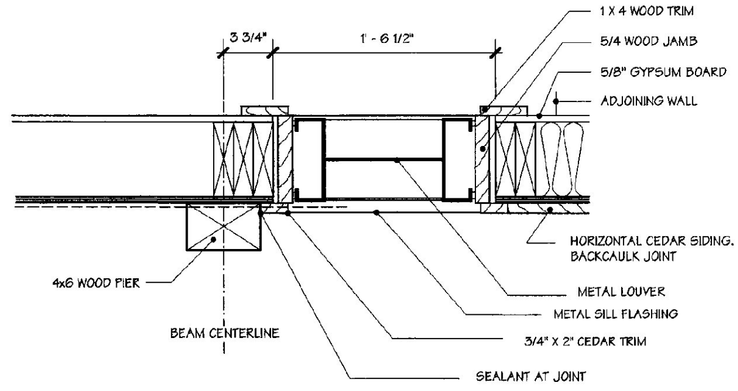

11 LOUVER @ PIER — 1 1/2" = 1' - 0"

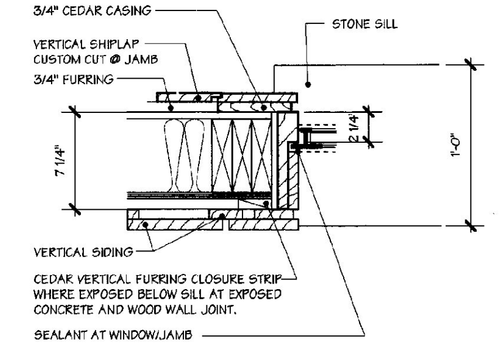

12 LOBBY WINDOW JAMB — 1 1/2" = 1' - 0"

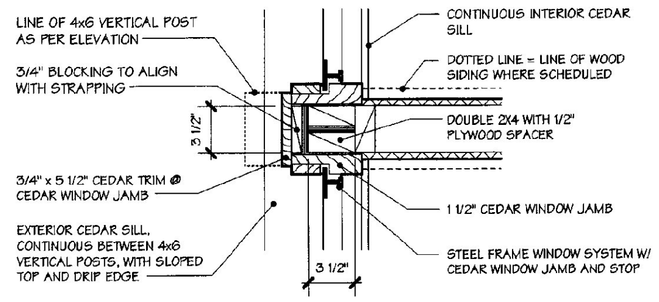

14 PLAN DETAIL @ BATHROOM — 1 1/2" = 1' - 0"

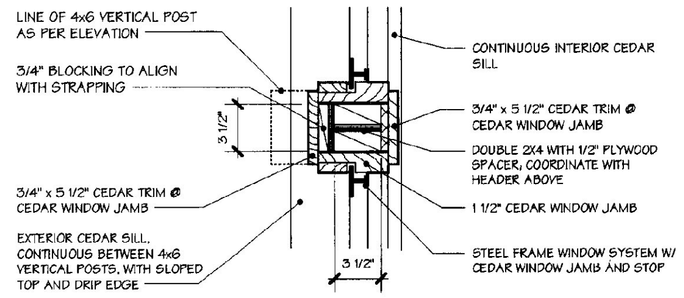

15 PLAN DETAIL @ BATHROOM — 1 1/2" = 1' - 0"

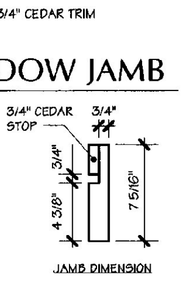



JANUARY 16, 2001

WILLISTON INFORMATION CENTER I89 Southbound

Project #: IM - BLDG (4)

DUNCAN • WISNIEWSKI ARCHITECTURE ■
255 SOUTH CHAMPLAIN STREET, BURLINGTON, VERMONT 05401 802.864.6693

A32sb

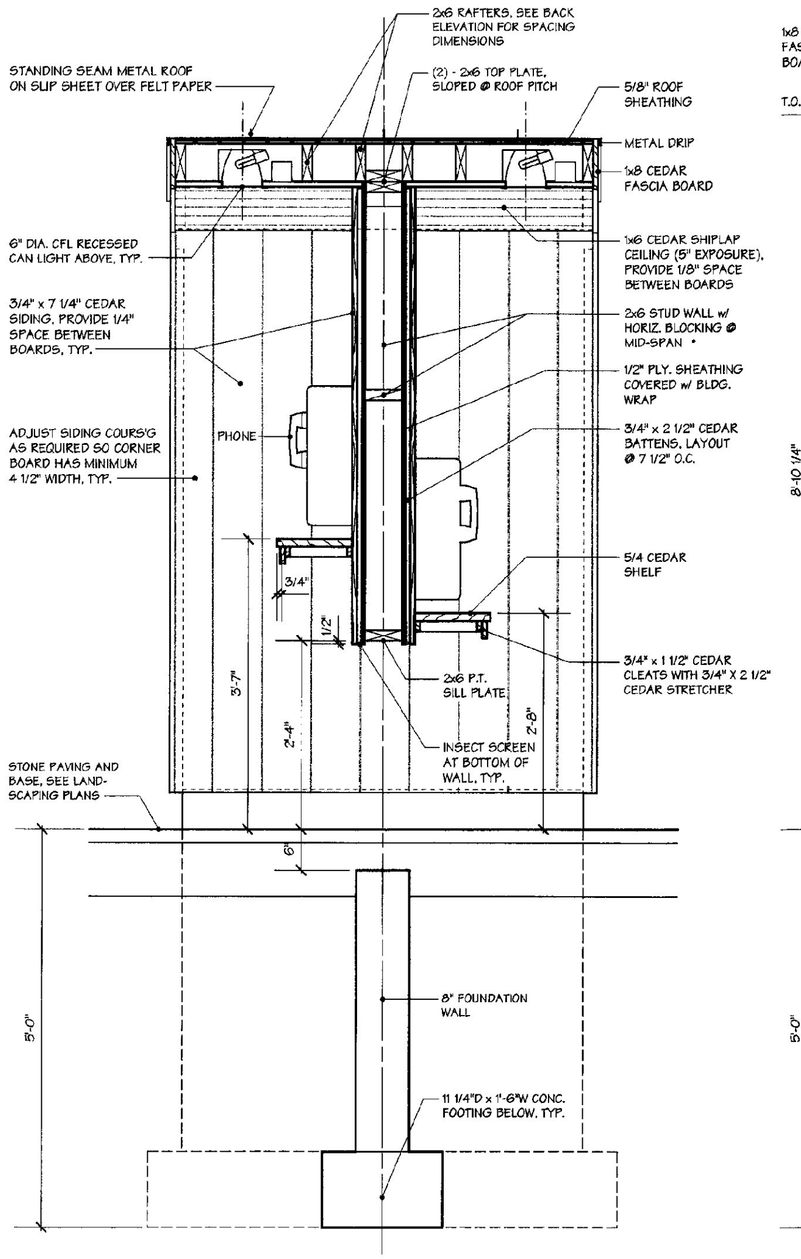

A PHONE KIOSK SECTION - A
3/4"=1'-0"

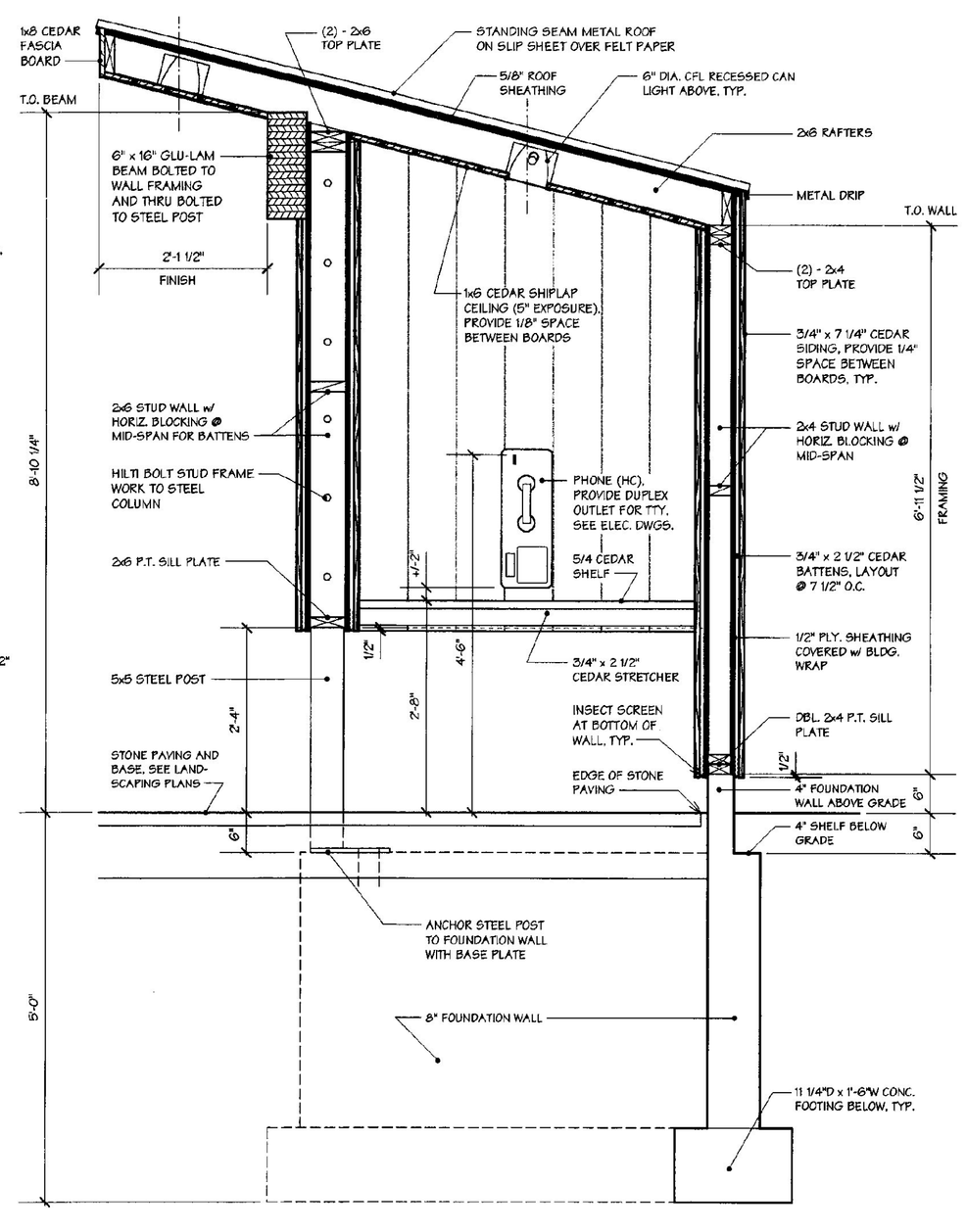

B PHONE KIOSK SECTION - B
3/4"=1'-0"

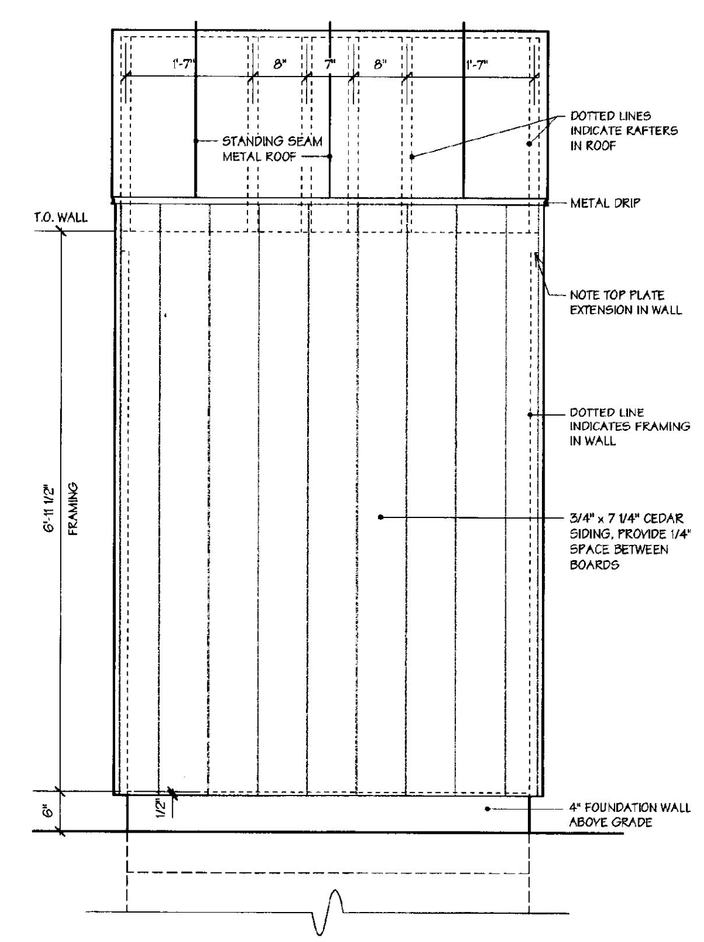

6 PHONE KIOSK BACK ELEVATION
3/4"=1'-0"

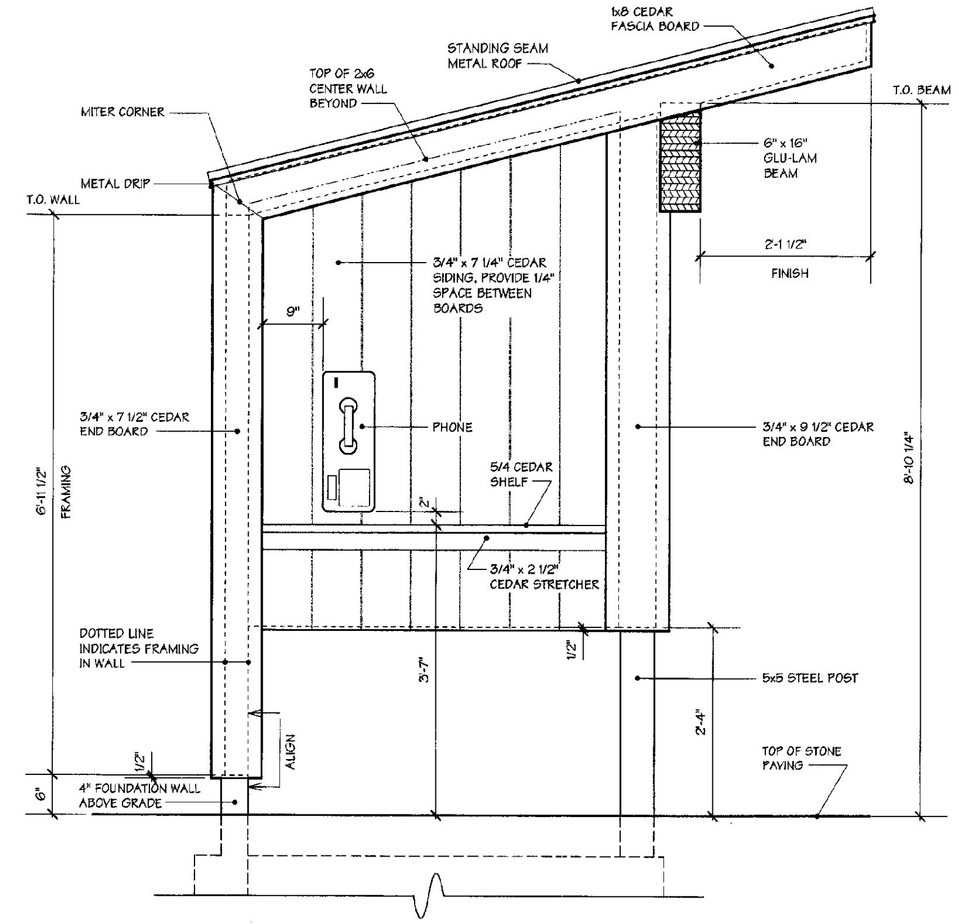

5 PHONE KIOSK RIGHT ELEVATION
3/4"=1'-0"

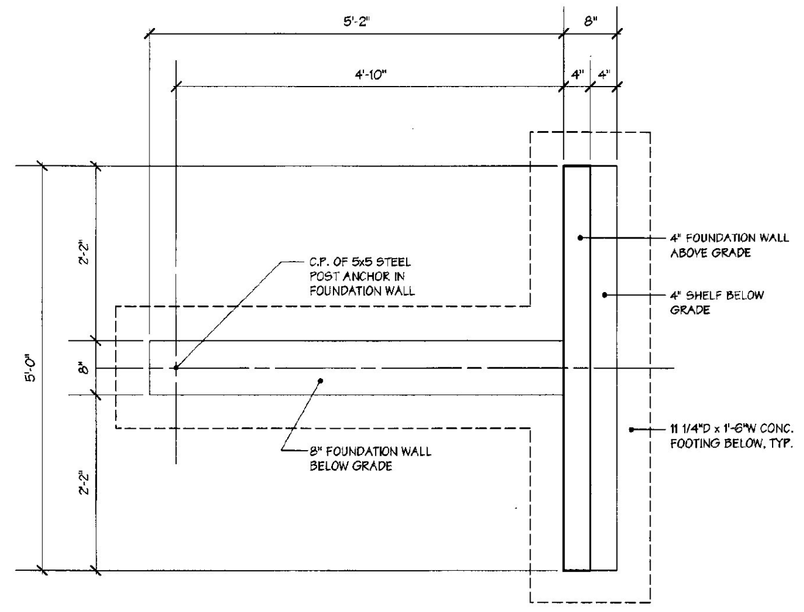

1 PHONE KIOSK FOUNDATION PLAN
3/4"=1'-0"

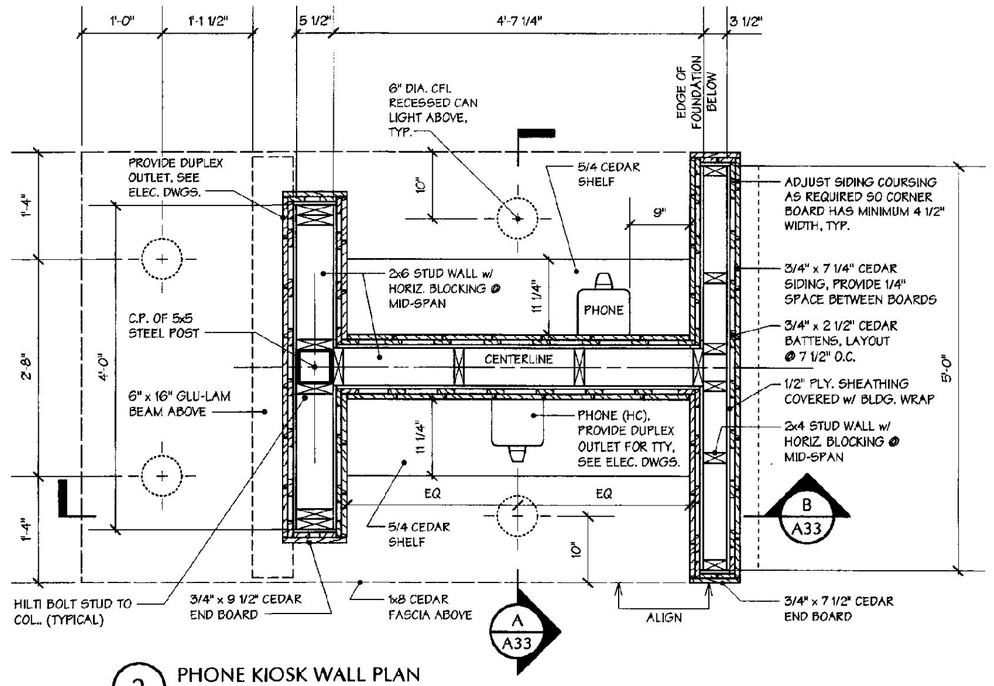

2 PHONE KIOSK WALL PLAN
3/4"=1'-0"

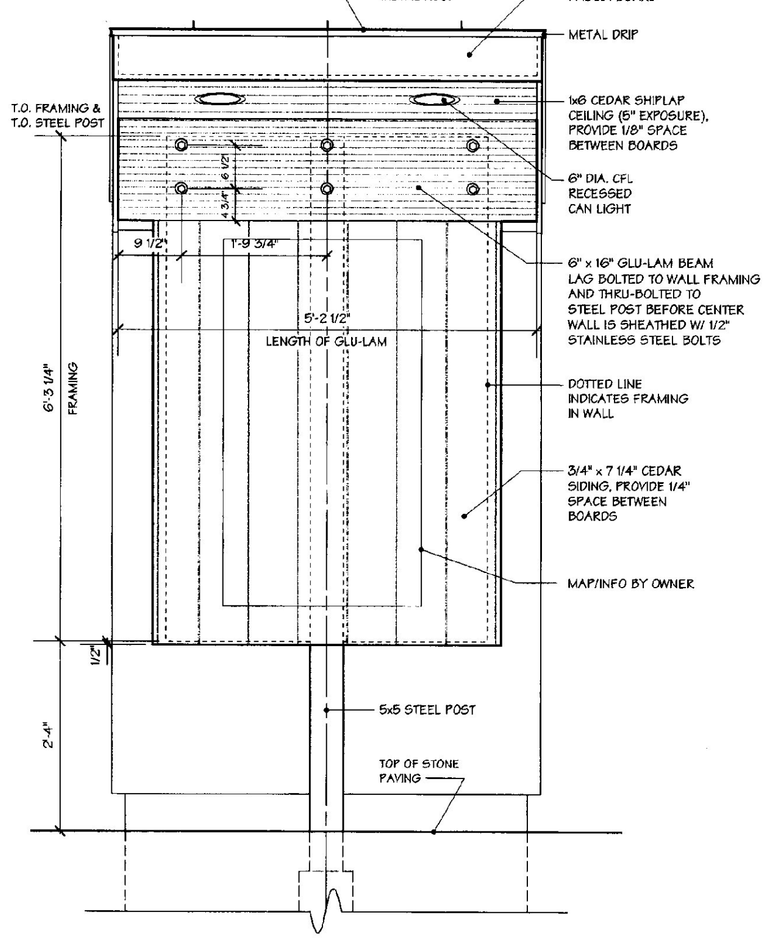

3 PHONE KIOSK FRONT ELEVATION
3/4"=1'-0"

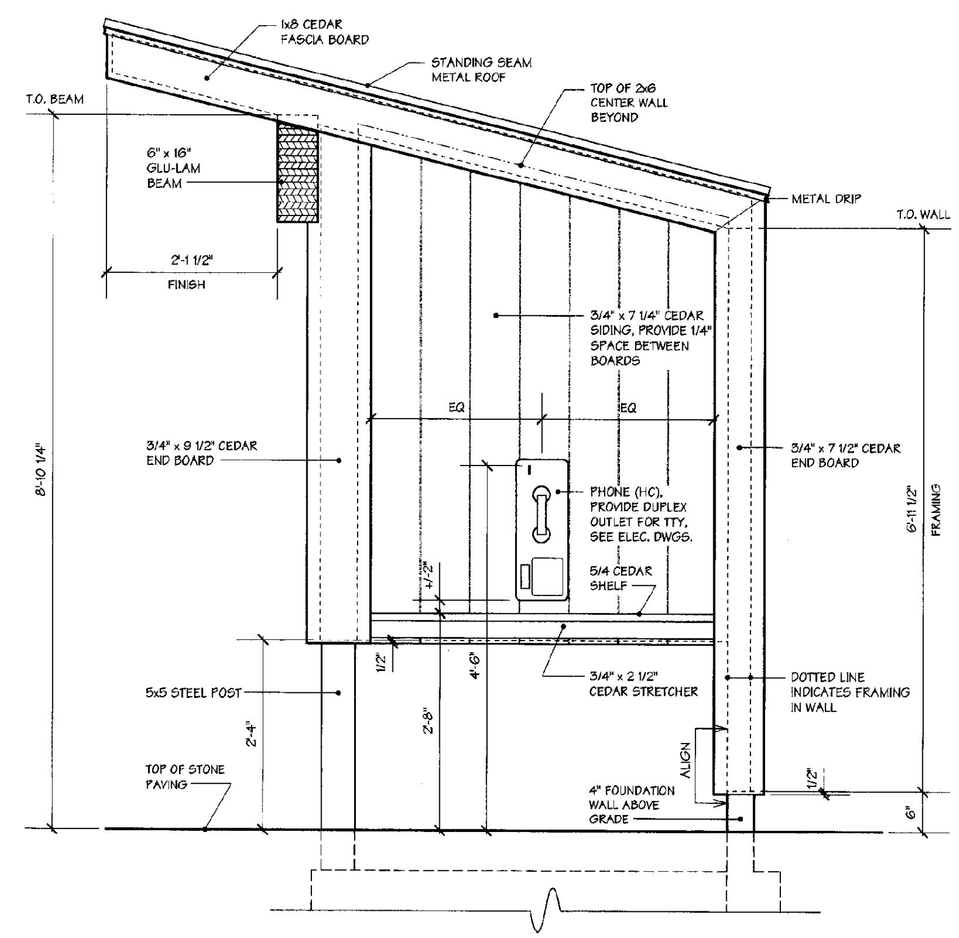

4 PHONE KIOSK RIGHT ELEVATION
3/4"=1'-0"

TELEPHONE KIOSK DETAILS

WILLISTON INFORMATION CENTER I89 Southbound

Project #: IM - BLDG (4)

DUNCAN • WISNIEWSKI ARCHITECTURE ▪
255 SOUTH CHAMPLAIN STREET, BURLINGTON, VERMONT 05401 802.864.6693

REGISTERED ARCHITECT MICHAEL WISNIEWSKI No. 1202 STATE OF VERMONT

JANUARY 16, 2001

A33sb

NOTE: REFER TO SHEET A6 FOR CONCRETE RELATED TO SHED.

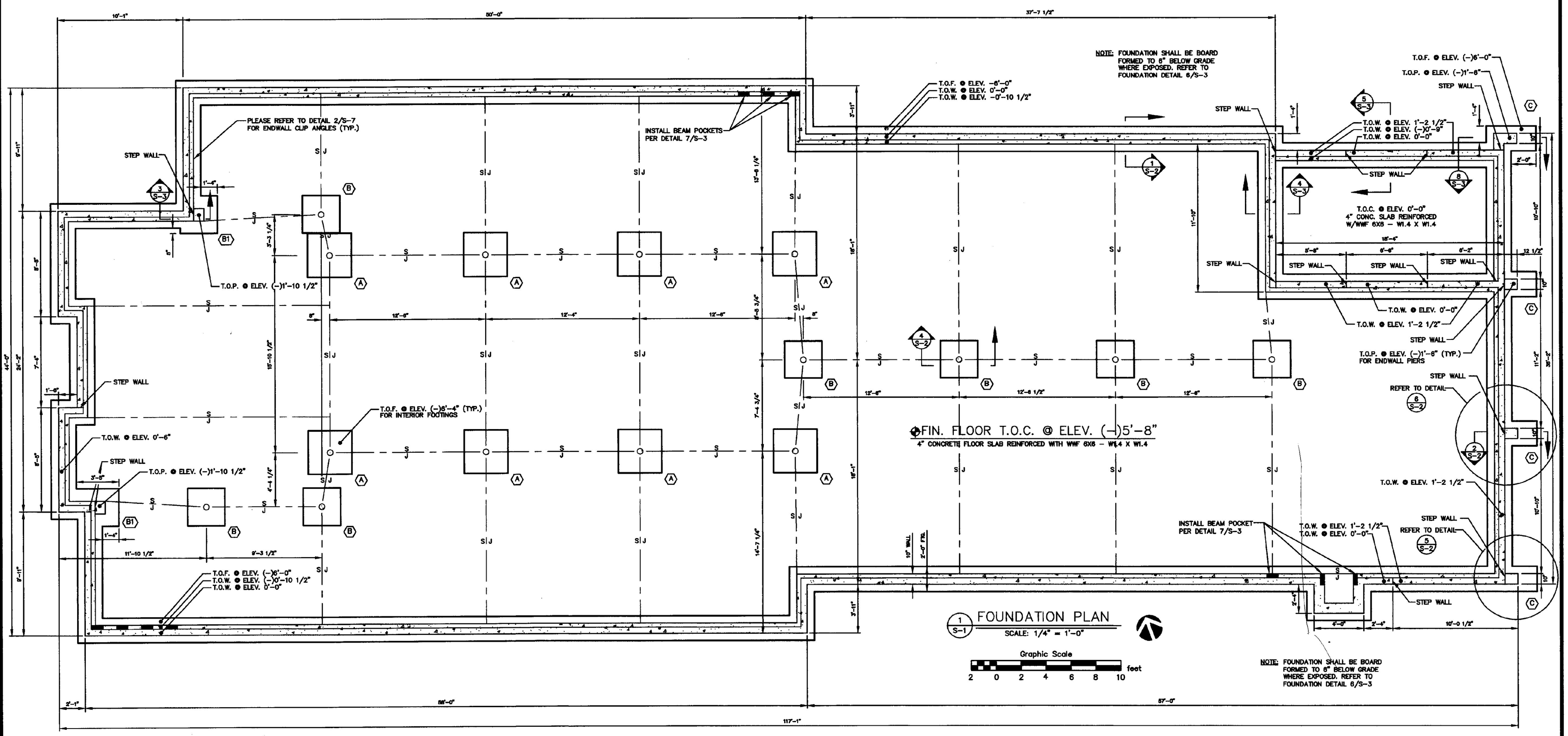

1/S-1 FOUNDATION PLAN
SCALE: 1/4" = 1'-0"

Graphic Scale
2 0 2 4 6 8 10 feet

PROJECT SUMMARY

1. Project Description:

CONSTRUCTION OF A NEW WELCOME CENTER AT THE WILLISTON I-89 REST AREAS.

2. Project Contacts:

Project Architect – Duncan-Wieniewski Architecture
255 South Champlain Street
Burlington, VT 05401
Contact: Michael Wieniewski
(802) 864-6693

Project Engineer – Champlain Consulting Engineers
85 Prim Road, P.O. Box 453
Colchester, Vermont 05446
Contact: Greg Bombardier
(802) 863-8060

JOB SITE SAFETY NOTES:

(1) PROVIDE ADEQUATE SAFETY FOR ALL WORKERS AND THE GENERAL PUBLIC ON AND NEAR THE JOB SITE AT ALL TIMES.

(2) FOLLOW THE SAFETY PROCEDURES SET FORTH BY THE VERMONT OCCUPATIONAL SAFETY AND HEALTH ADMINISTRATION, (VOSHA), AT A MINIMUM, AT ALL TIMES.

(3) ALL HOLES SHALL BE FILLED, COVERED OR BARRICADED AT THE END OF EACH WORKING DAY.

(4) AT THE END OF EACH WORKDAY, ALL UNFINISHED WORK SHALL BE IDENTIFIED IN SUCH A MANNER SO AS TO WARN UNAUTHORIZED PERSONNEL FROM ENTERING OR USING THE UNFINISHED AREA.

GENERAL NOTES:

(1) THE STRUCTURAL PLANS AND DETAILS SHALL BE USED IN CONJUNCTION WITH THE ARCHITECTURAL PLANS FOR THE WELCOME CENTER PREPARED BY DUNCAN WIENIEWSKI ARCHITECTURE. REFER TO ARCHITECTURAL DRAWINGS SHEET A-8 FOR CONCRETE RELATED TO SHED.

(2) PRIOR TO COMMENCING ANY CONSTRUCTION, THE GENERAL CONTRACTOR SHALL VERIFY EXISTING FIELD CONDITIONS. THE PROJECT ARCHITECT SHALL BE NOTIFIED IMMEDIATELY WHERE DISCREPANCIES EXIST BETWEEN THE PROJECT DRAWINGS AND ACTUAL FIELD CONDITIONS.

(3) DO NOT SCALE DIMENSIONS FROM THE DRAWINGS. WHERE DIMENSIONS ON THE PROJECT DRAWINGS ARE UNCLEAR, CONTACT THE PROJECT ARCHITECT IMMEDIATELY FOR CLARIFICATION.

(4) IT IS THE GENERAL CONTRACTOR'S RESPONSIBILITY TO ENSURE THAT THE PROJECT DRAWINGS REFLECT THE LATEST REVISIONS.

(5) ALL WALLS, FOOTINGS AND PIERS SHALL BE CONSTRUCTED WITH CONCRETE HAVING A MINIMUM COMPRESSIVE STRENGTH OF 3,000 PSI AT 28 DAYS. REINFORCING STEEL SHALL BE NEW, DEFORMED BARS, GRADE 60 CONFORMING WITH THE REQUIREMENTS OF ASTM SPECIFICATION A615.

(6) CONCRETE USED FOR FLOOR SLABS SHALL HAVE A MINIMUM COMPRESSIVE STRENGTH OF 4,000 PSI AT 28 DAYS. AIR-ENTRAINED.

(7) WELDED WIRE FABRIC SHALL BE PROVIDED IN FLAT SHEETS AND SHALL BE PLAIN, COLD-DRAWN, ELECTRICALLY WELDED FABRIC CONFORMING TO ASTM A185, AND WIRE MEETING ASTM A82.

(8) ALL FOOTINGS SHALL BE PLACED ON COMPACTED GRANULAR BACKFILL OR UNDISTURBED EARTH HAVING A MINIMUM ALLOWABLE BEARING STRESS OF FOUR TONS PER SQUARE FOOT.

(9) COMMONLY USED ABBREVIATIONS ARE AS FOLLOWS:
T.O.W. – TOP OF FOUNDATION WALL
T.O.F. – TOP OF FOUNDATION FOOTING
T.O.C. – TOP OF CONCRETE SLAB
T.O.S. – TOP OF STEEL
T.O.P. – TOP OF CONCRETE PIER

(10) CONSTRUCTION OR CONTRACTION JOINTS IN FLOOR SLABS AND WALLS SHALL BE PLACED AT NOT GREATER THAN TWENTY-FOUR (24) FEET ON-CENTERS.

(11) RELATED SPECIFICATION SECTIONS:
THE FOLLOWING SPECIFICATION SECTIONS SHALL BE REFERENCED FROM THE PROJECT MANUAL TO SUPPORT THE BUILDING DRAWINGS FOR THIS PROJECT.
SECTION 01340 – SHOP DRAWINGS, PRODUCT DATA AND SAMPLES
SECTION 01410 – TESTING SERVICES
SECTION 03300 – CAST-IN-PLACE CONCRETE
SECTION 05100 – STRUCTURAL STEEL
SECTION 05210 – STEEL JOISTS
SECTION 05300 – METAL DECKING
SECTION 06100 – ROUGH CARPENTRY

(12) THE 1997 "BOCA" NATIONAL BUILDING CODE WAS USED AS A REFERENCE TO DEVELOP THE DESIGN LOAD CRITERIA FOR THIS PROJECT. THE DESIGN LOADS ARE SUMMARIZED AS FOLLOWS:

ROOF
DEAD LOAD:
(a) UNIFORM DISTRIBUTED LOAD = 20 PSF
LIVE LOAD:
(a) UNIFORM DISTRIBUTED LOAD = 40 PSF (SNOW)

LOFT
DEAD LOAD:
(a) UNIFORM DISTRIBUTED LOAD = 15 PSF
LIVE LOAD:
(a) UNIFORM DISTRIBUTED LOAD = 125 PSF (MECHANICAL)

FLOOR
DEAD LOAD:
(a) UNIFORM DISTRIBUTED LOAD = 78 PSF
LIVE LOAD:
(a) UNIFORM DISTRIBUTED LOAD = 100 PSF (PUBLIC PLACE)

(13) THE GENERAL CONTRACTOR SHALL CONTACT "DIG SAFE" AT (1-888-DIG-SAFE) SEVENTY-TWO HOURS PRIOR TO ANY EXCAVATION TO ACCURATELY ESTABLISH THE LOCATION OF ALL UNDERGROUND UTILITIES LOCATED ON THE PROJECT SITE.

(14) ANCHOR BOLTS SHALL BE ASTM A307 WITH THE FOLLOWING MINIMUM EMBEDMENT LENGTHS:
3/4" DIA. – 12" MIN. EMBEDMENT (INCLUDES 5" HOOK)
PROJECTED 4 1/2" MIN.

(15) COORDINATE ALL NECESSARY UTILITY PENETRATIONS WITH RESPECTIVE SUBCONTRACTORS.

(16) STRUCTURAL DRAWINGS REF. FF. ELEV. ● 0.00' = CIVIL DRAWINGS REF. ELEV. ● 808.00'.

FOOTING				PIER		
MARK	DIMENSION	REINFORCING	DOWELS	DIMENSION	REINFORCING	TIES
A	3'-6" X 3'-6" X 12"	4–#5 BARS, E.W.				
B	3'-0" X 3'-0" X 12"	3–#5 BARS, E.W.				
B1	3'-0" X 3'-0" X 12"	3–#5 BARS, E.W.	4–#5 BARS	10" X 12"	4–#5 BARS	#3 BARS @ 10" O.C.
C	2'-0" X 3'-2" X 12"	3–#5 BARS, E.W.	4–#5 BARS	10" X 12 1/2"	4–#5 BARS	#3 BARS @ 10" O.C.

2/S-1 FOOTING AND PIER SCHEDULE

REVISIONS	BY

COPYRIGHT © 2001
CHAMPLAIN CONSULTING ENGINEERS
ALL RIGHTS RESERVED

CHAMPLAIN CONSULTING ENGINEERS
85 PRIM ROAD, P.O. BOX 453
COLCHESTER, VERMONT 05446
(802) 863-8060
(802) 864-1878 FAX

STATE OF VERMONT
GREGORY J. BOMBARDIER
NO. 4496
REGISTERED
PROFESSIONAL ENGINEER

INTERSTATE 89 SOUTHBOUND
WILLISTON INFORMATION CENTER
FOUNDATION PLAN
PROJECT # IM-IBLDG(4)
WILLISTON VERMONT

DRAWN	CCE
CHECKED	GJB
SCALE	1/4" =1'-0"
DATE	01/16/01
JOB NO.	93114
SHEET	S1sb
OF	8 SHEETS

IBM File:C:\DOCS\PROJS\9~~\41\Southbound\S3114-S1.dwg Plotted:2001-01-16 09:58:56

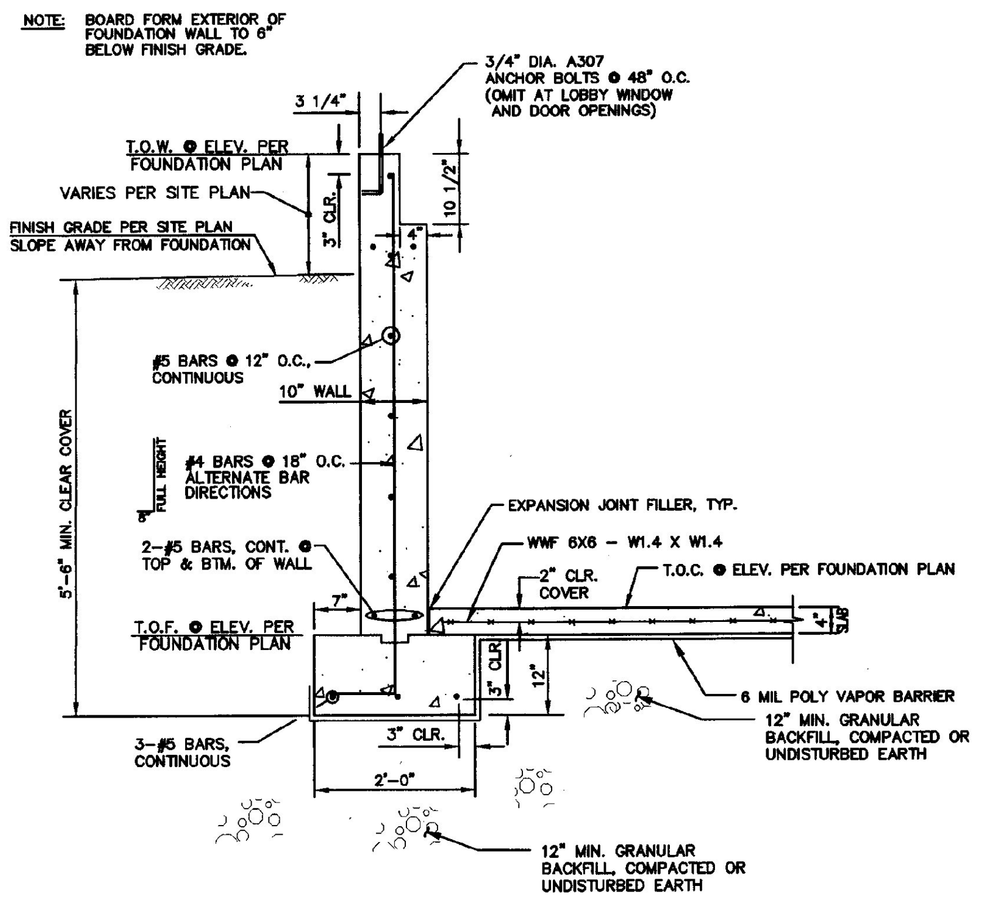

1 S-2 FOUNDATION WALL DETAIL
3/4" = 1'-0"

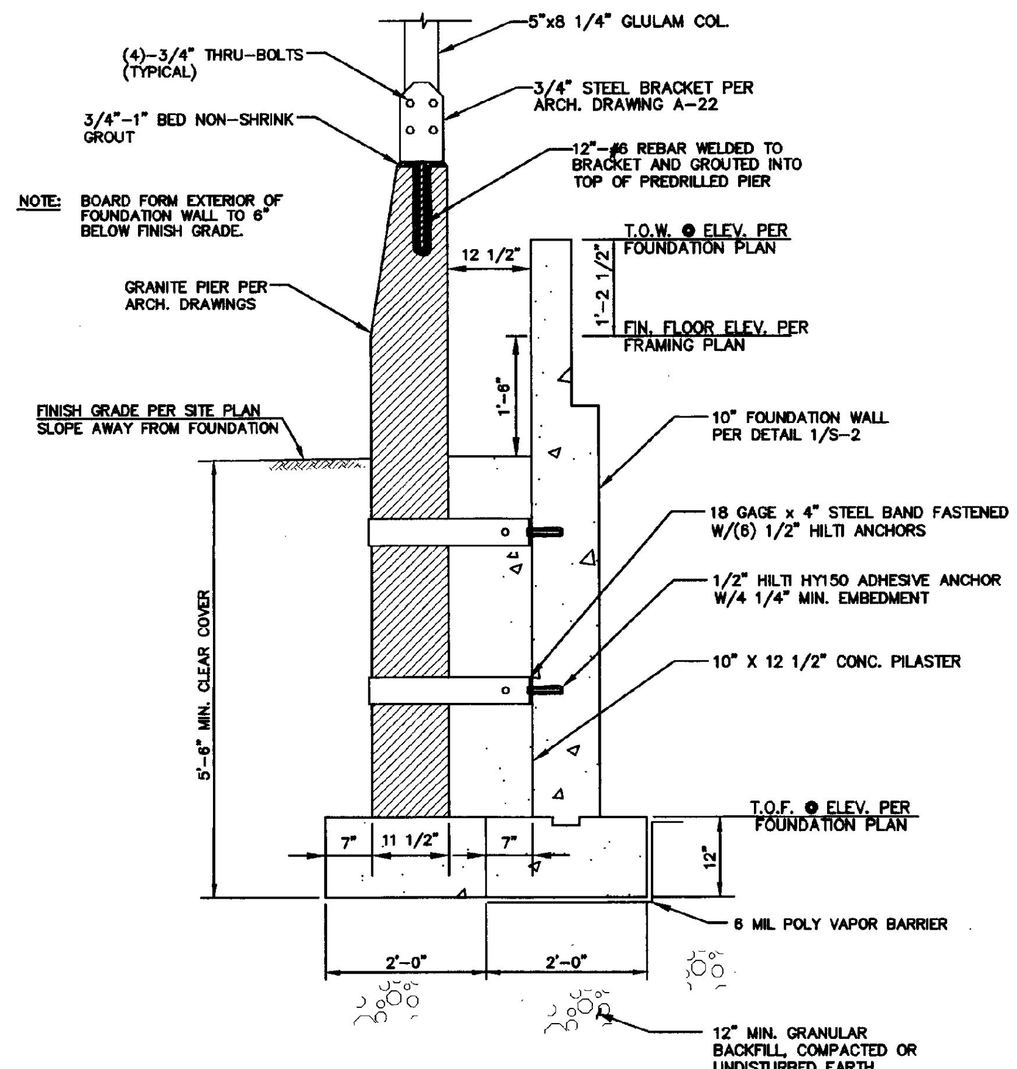

2 S-2 STONE PIER DETAIL
3/4" = 1'-0"

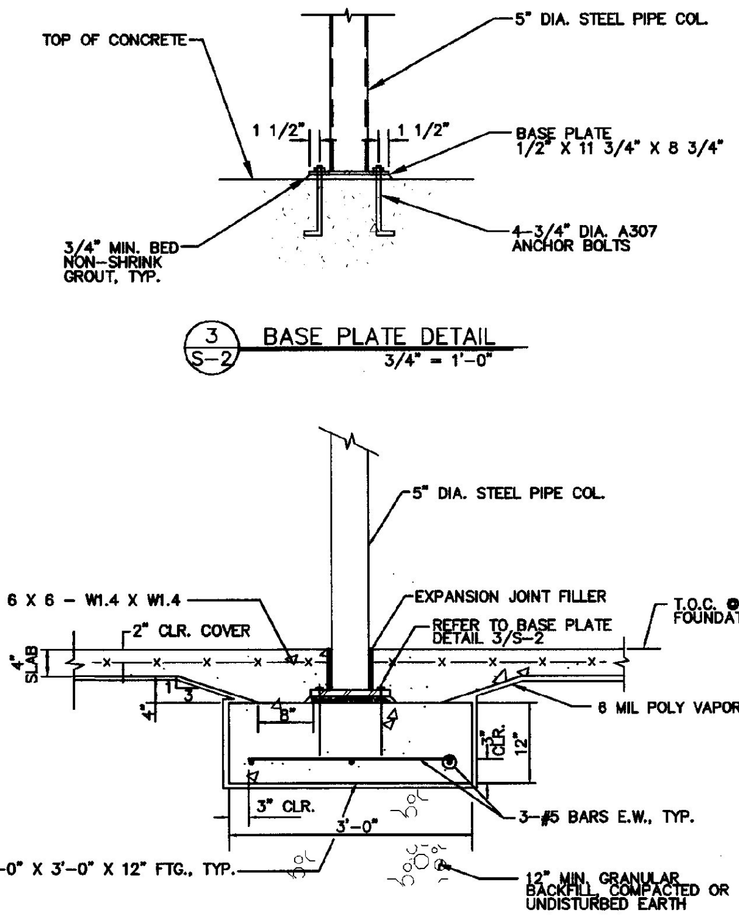

3 S-2 BASE PLATE DETAIL
3/4" = 1'-0"

4 S-2 INTERIOR FOOTING & POST DETAIL
3/4" = 1'-0"

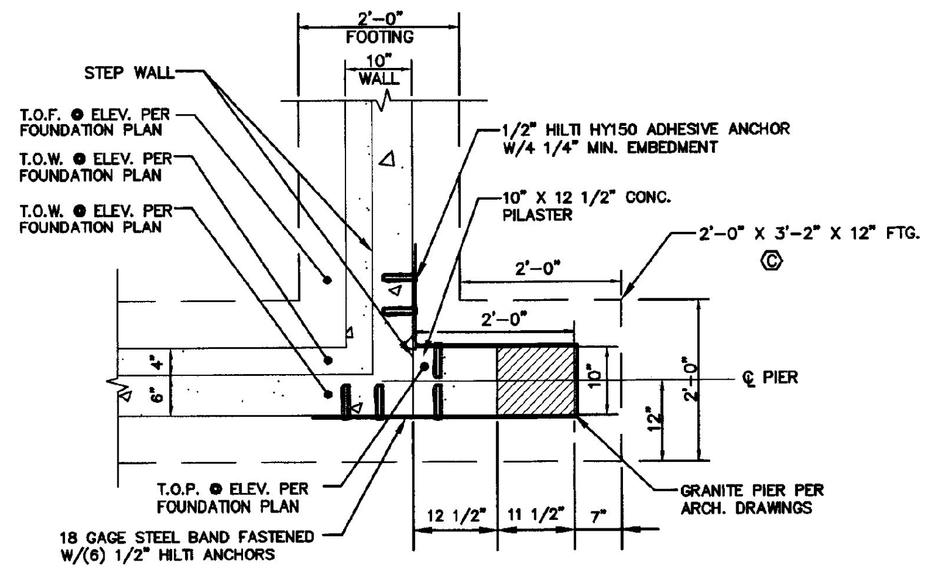

5 S-2 CORNER PIER DETAIL
SCALE: 3/4" = 1'-0"

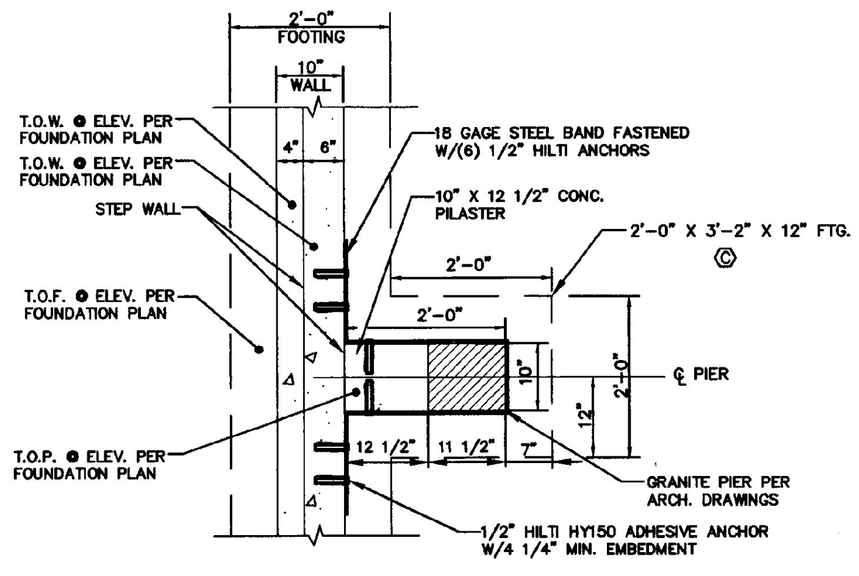

6 S-2 ENDWALL PIER DETAIL
SCALE: 3/4" = 1'-0"

GRANULAR BACKFILL:

GRANULAR BACKFILL SHALL CONSIST OF FREE-DRAINING GRANULAR MATERIAL SATISFACTORILY GRADED, REASONABLY FREE FROM LOAM, SILT, CLAY AND ORGANIC MATERIALS AND MEETING THE FOLLOWING CRITERIA:

SIEVE NUMBER	% PASSING
3 INCHES	100
NO. 4	45 - 75
NO. 100	0 - 12
NO. 200	0 - 6

COMPACTION OF GRANULAR BACKFILL:

GRANULAR BACKFILL SHALL BE INSTALLED IN 6" MAXIMUM HORIZONTAL LIFTS AND COMPACTED TO NOT LESS THAN 95% OF THE MAXIMUM DRY DENSITY OF THE MATERIAL AT THE OPTIMUM MOISTURE CONTENT AS ESTABLISHED BY THE STANDARD PROCTOR TEST (ASTM D698).

7 S-2 GRANULAR BACKFILL FOR STRUCTURES

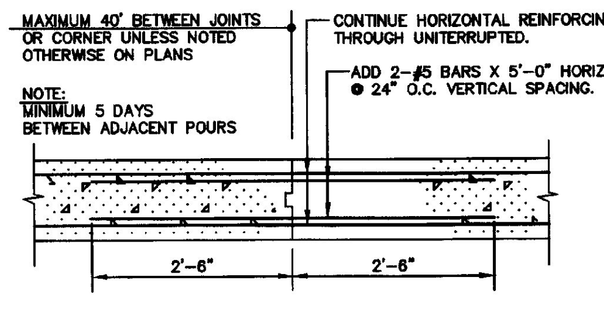

8 S-2 TYPICAL WALL CONSTRUCTION JOINT
N.T.S.

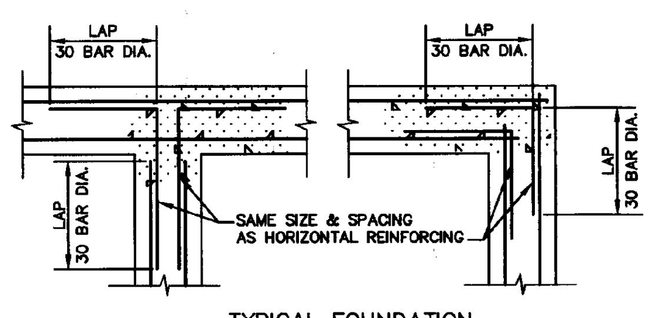

9 S-2 TYPICAL FOUNDATION WALL REINFORCING DETAILS
N.T.S.

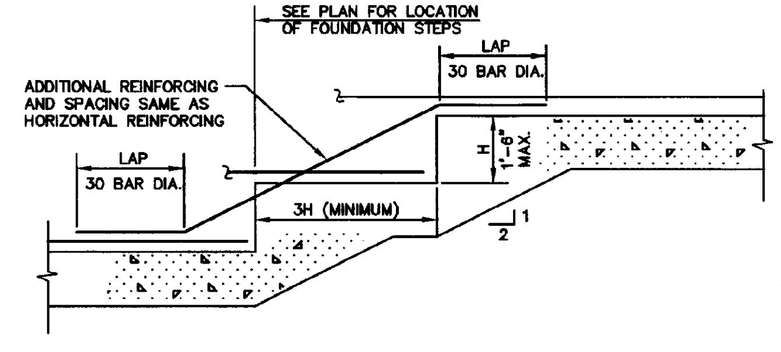

10 S-2 TYPICAL STEP FOOTING DETAIL
N.T.S.

REVISIONS | BY

COPYRIGHT © 2001
CHAMPLAIN CONSULTING ENGINEERS
ALL RIGHTS RESERVED

CHAMPLAIN CONSULTING ENGINEERS
85 PRIM ROAD, P.O. BOX 453
COLCHESTER, VERMONT 05446
(802) 863-6060
(802) 864-1878 FAX

STATE OF VERMONT
GREGORY J. BOMBARDIER
NO. 4496
REGISTERED
PROFESSIONAL ENGINEER

INTERSTATE 89 SOUTHBOUND
WILLISTON INFORMATION CENTER
FOUNDATION DETAILS
PROJECT # IM-BLDG(4)
WILLISTON VERMONT

DRAWN CCE
CHECKED GJB
SCALE AS NOTED
DATE 01/16/01
JOB NO. 93114
SHEET S2sb
OF 8 SHEETS

Ref: File:\Main\Vaffroad**\Southbound\93114-S2.dwg Plotted: 2001-01-15 0852:09

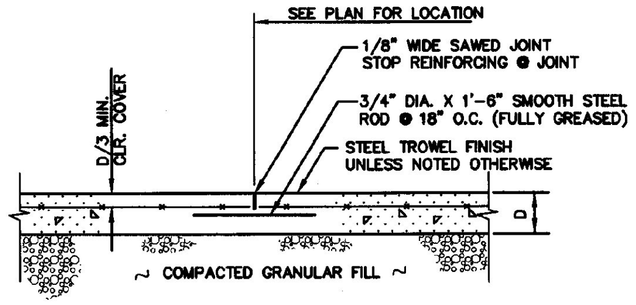

1 S-3 TYPICAL SLAB-ON GRADE SAW JOINT
N.T.S.

NOTES:

1. JOINT MUST BE SAWED AS SOON AS THE SURFACE IS FIRM ENOUGH SO THAT IT WILL NOT BE TORN OR DAMAGED BY THE BLADE, USUALLY WITHIN 4 TO 12 HOURS AFTER THE CONCRETE HAS HARDENED.
2. JOINT WILL BE UNFILLED UNLESS CONDITIONS ARE WET (USE APPROVED GOOD QUALITY ELASTOMERIC SEALANT) OR SUBJECTED TO WHEEL LOADS (USE APPROVED RIGID OR SEMI-RIGID FILLER WITH DUROMETER SHORE A-SCALE HARDNESS OF APPROXIMATELY 80 CONFORMING TO ASTM D2240 & D676).
3. SLABS MUST BE CONTINUOUSLY CURED WITH WATER AND AN APPROVED SOAKING AGENT FOR A MINIMUM OF 7 DAYS.

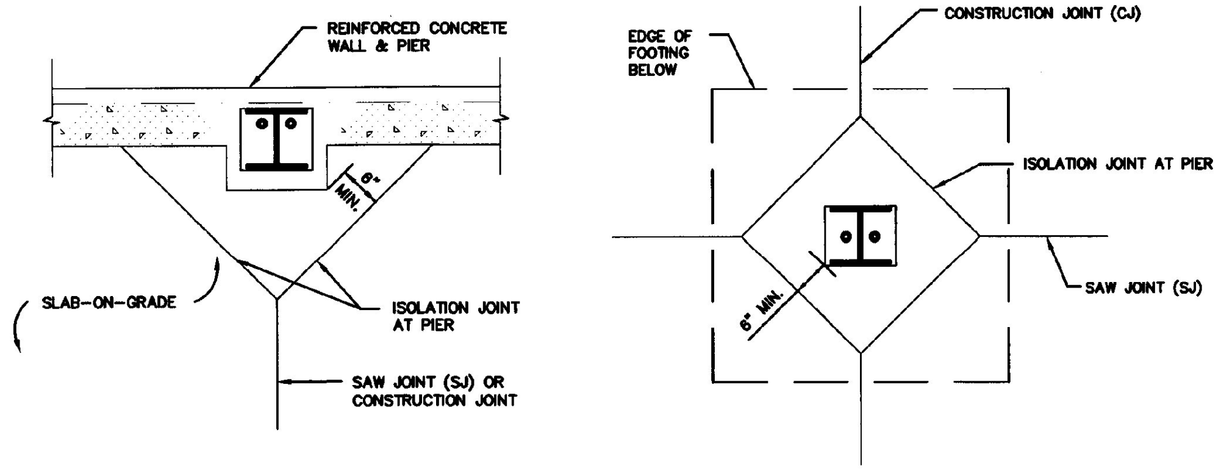

2 S-3 TYPICAL ISOLATION JOINTS
N.T.S.

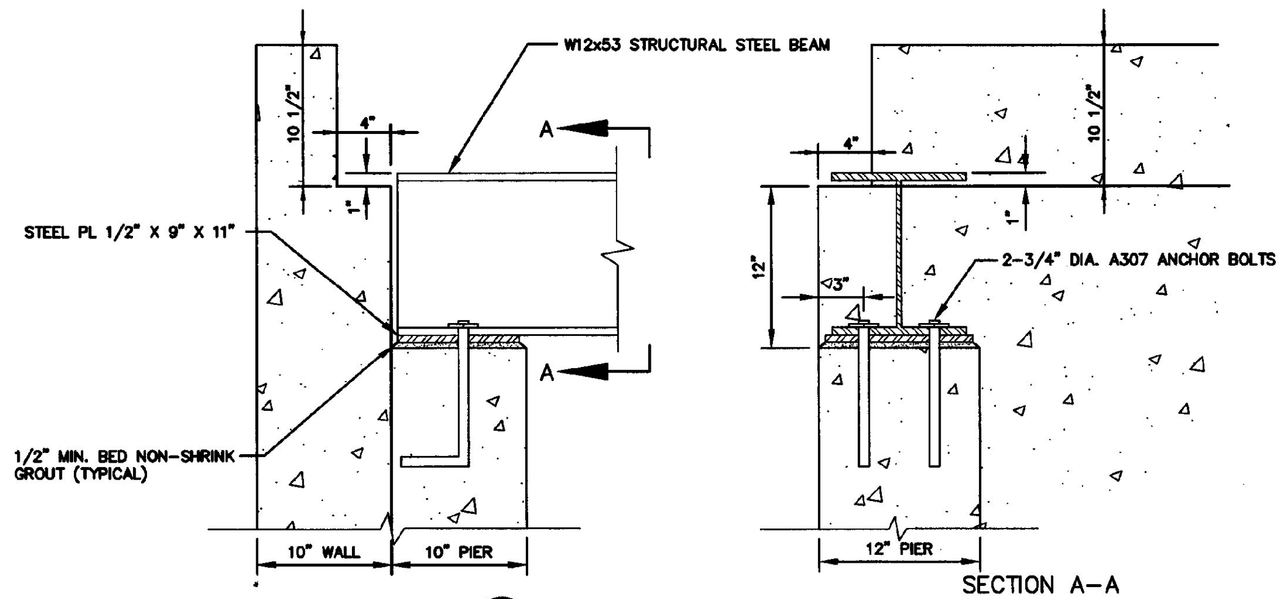

3 S-3 TYPICAL BEAM ANCHOR DETAIL
1 1/2" = 1'-0"

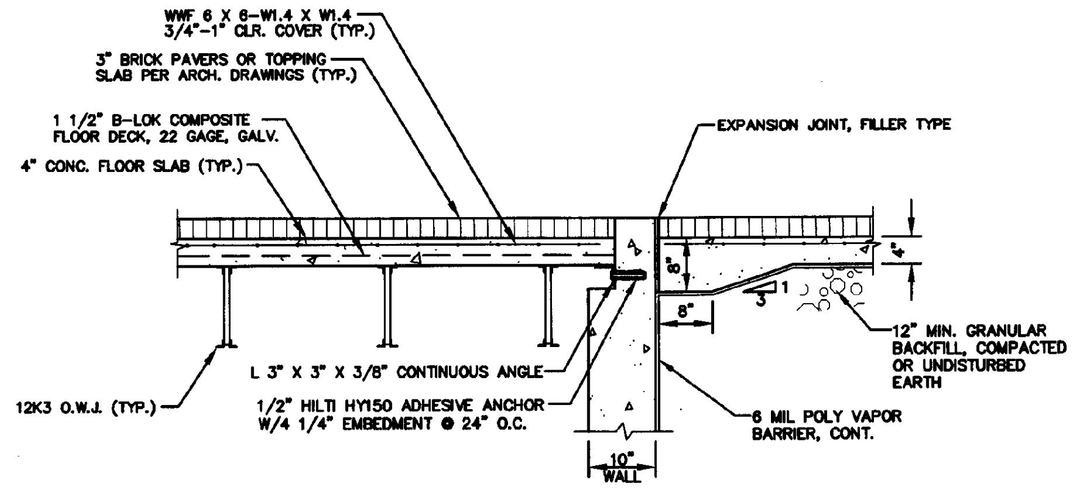

4 S-3 INTERIOR WALL @ VESTIBULE
3/4" = 1'-0"

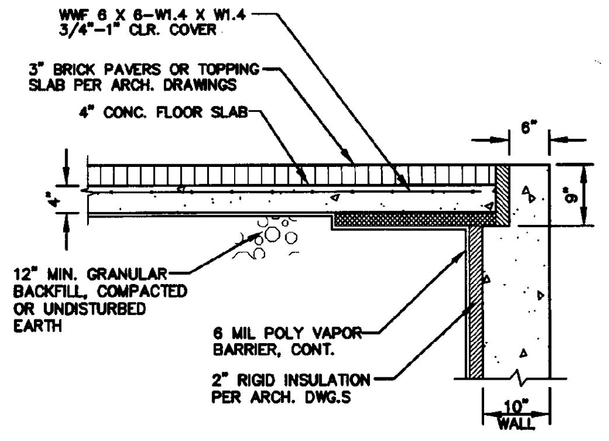

5 S-3 EXTERIOR WALL @ VESTIBULE
3/4" = 1'-0"

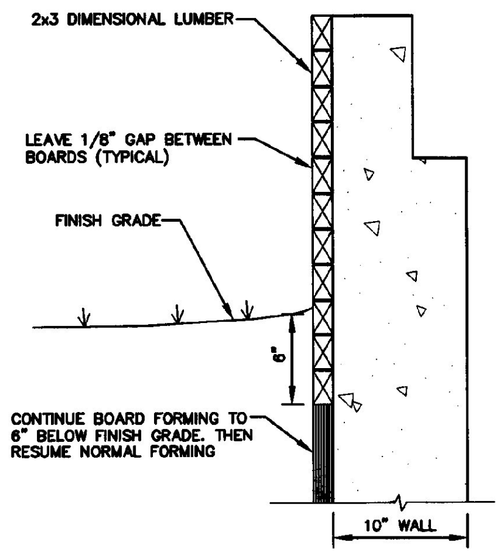

6 S-3 TYPICAL BOARD FORM DETAIL
N.T.S.

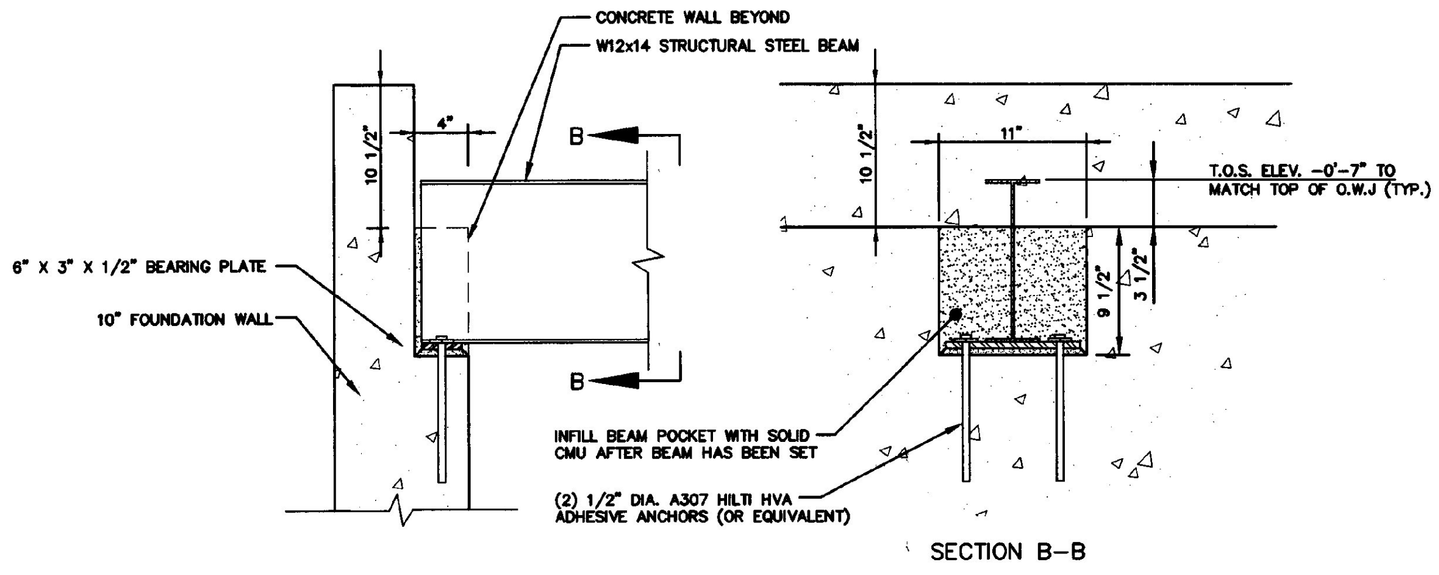

7 S-3 TYPICAL BEAM POCKET DETAIL
1 1/2" = 1'-0"

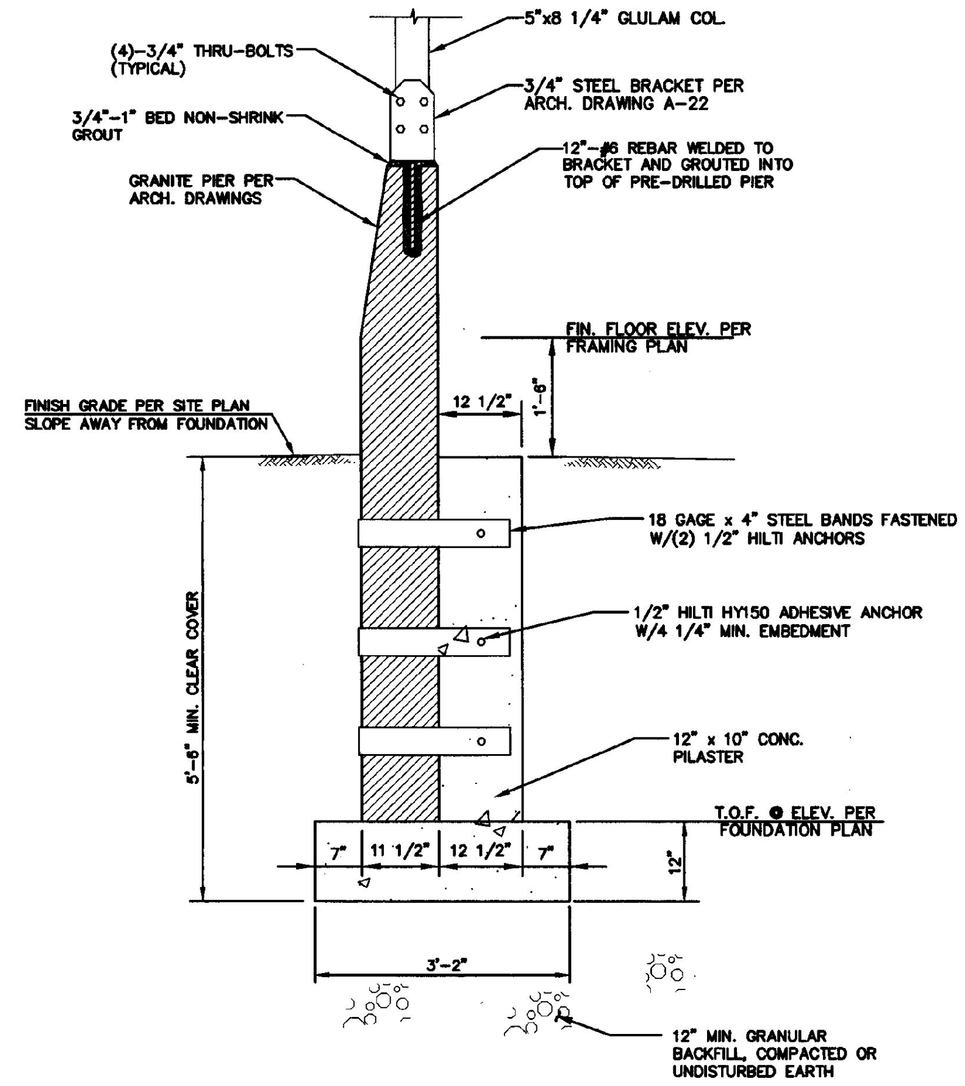

8 S-3 STONE PIER DETAIL
3/4" = 1'-0"

REVISIONS	BY

COPYRIGHT © 2001
CHAMPLAIN CONSULTING ENGINEERS
ALL RIGHTS RESERVED

CHAMPLAIN CONSULTING ENGINEERS
85 PRIM ROAD, P.O. BOX 453
COLCHESTER, VERMONT 05446
(802) 863-8060
(802) 864-1878 FAX

STATE OF VERMONT
GREGORY J. BOMMARITO
NO. 4496
REGISTERED
PROFESSIONAL ENGINEER

INTERSTATE 89 SOUTHBOUND
WILLISTON INFORMATION CENTER
FOUNDATION DETAILS
PROJECT # IM-BLDG(4)
WILLISTON VERMONT

DRAWN	CCE
CHECKED	GJB
SCALE	AS NOTED
DATE	01/16/01
JOB NO.	93114
SHEET	S3sb

OF 8 SHEETS

BH File: \\Bilh\bilhpub\...4\Southbound\93114-S4.dwg Plotted: 2001-01-15 10:06:50

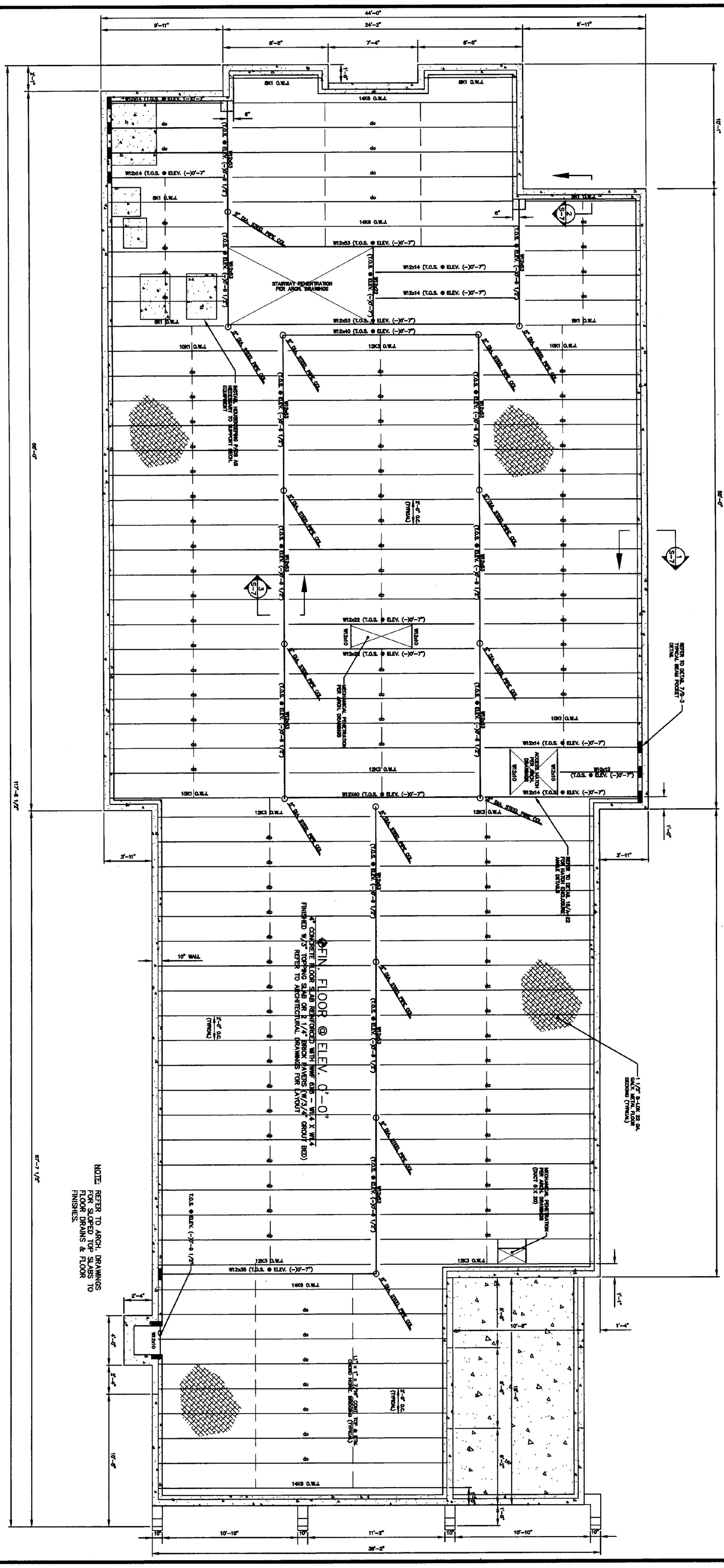

NOTE: COORDINATE SIZE OF HOUSEKEEPING PADS REQUIRED W/MECHANICAL CONTRACTOR FOR EQUIPMENT PROVIDED.

NOTE: ALL HOUSEKEEPING PADS SHALL EXTEND 4" BEYOND DIMENSIONS OF EQUIPMENT AND SHALL BE 4" HIGH.

NOTE: REFER TO ARCH. DRAWINGS FOR SLOPED TOP SLABS TO FLOOR DRAINS & FLOOR FINISHES.

⊕FIN. FLOOR @ ELEV. 0'-0"

4" CONCRETE FLOOR SLAB REINFORCED WITH WWF 6X6 - W1.4 X W1.4 FINISHED W/3" TOPPING SLAB OR 2 1/4" BRICK PAVERS (W/3/4" GROUT BED) REFER TO ARCHITECTURAL DRAWINGS FOR LAYOUT

1/S-4 FIRST FLOOR FRAMING PLAN

SCALE: 1/4" = 1'-0"

Graphic Scale
2 0 2 4 6 8 10 feet

S4sb

OF 8 SHEETS

DRAWN	CCE
CHECKED	GJB
SCALE	1/4" =1'-0"
DATE	01/16/01
JOB NO.	93114
SHEET	

INTERSTATE 89 SOUTHBOUND
WILLISTON INFORMATION CENTER

FIRST FLOOR FRAMING PLAN

WILLISTON — PROJECT # IM-BLDG(4) — VERMONT

STATE OF VERMONT REGISTERED PROFESSIONAL ENGINEER NO. 4496 GREGORY J. BOERNER

CHAMPLAIN CONSULTING ENGINEERS
85 PRIM ROAD, P.O. BOX 453
COLCHESTER, VERMONT 05446
(802) 863-8060
(802) 864-1878 FAX

COPYRIGHT © 2001 CHAMPLAIN CONSULTING ENGINEERS ALL RIGHTS RESERVED

REVISIONS | BY

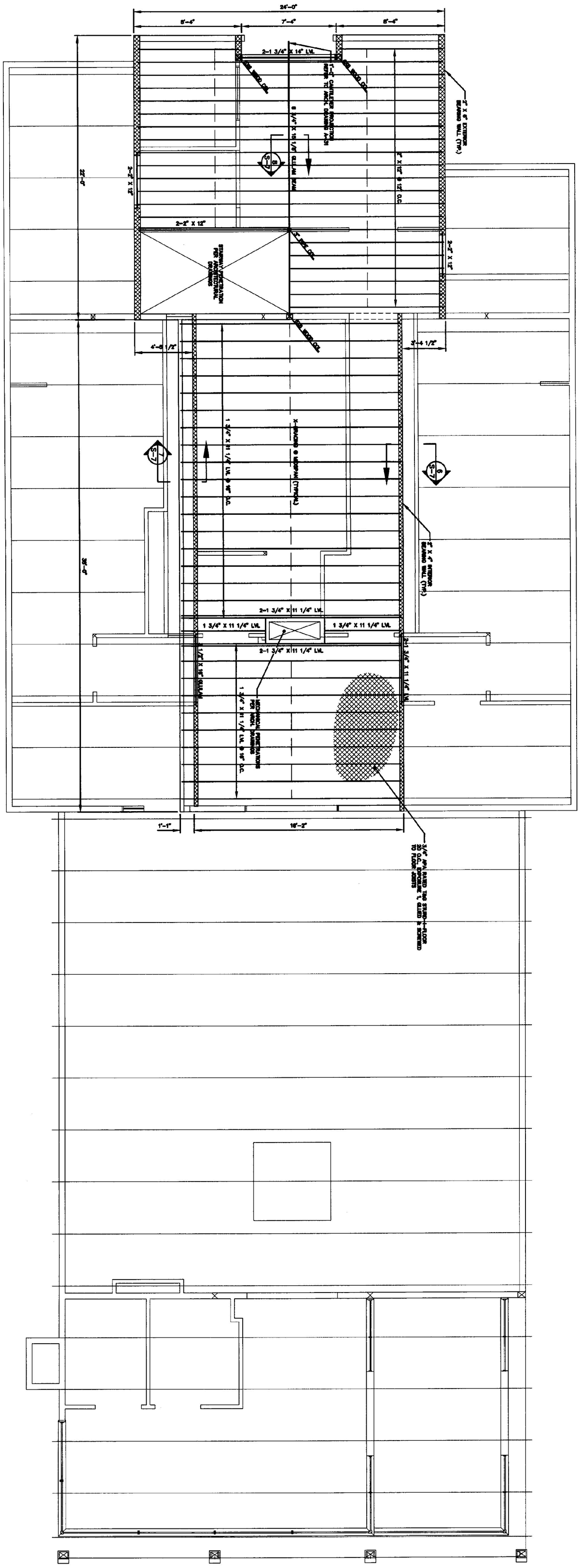

1/S-5 LOFT FRAMING PLAN

SCALE: 1/4" = 1'-0"

Graphic Scale
2 0 2 4 6 8 10 feet

S5sb

OF 8 SHEETS

DRAWN	CCE
CHECKED	GJB
SCALE	1/4" =1'-0"
DATE	01/16/01
JOB NO.	93114
SHEET	

INTERSTATE 89 SOUTHBOUND WILLISTON INFORMATION CENTER

LOFT FRAMING PLAN

WILLISTON — PROJECT # IM-BLDG(4) — VERMONT

REGISTERED PROFESSIONAL ENGINEER — STATE OF VERMONT — NO. 4496

CHAMPLAIN CONSULTING ENGINEERS
85 PRIM ROAD, P.O. BOX 453
COLCHESTER, VERMONT 05446
(802) 863-8060
(802) 864-1878 FAX

COPYRIGHT © 2001 CHAMPLAIN CONSULTING ENGINEERS ALL RIGHTS RESERVED

REVISIONS	BY

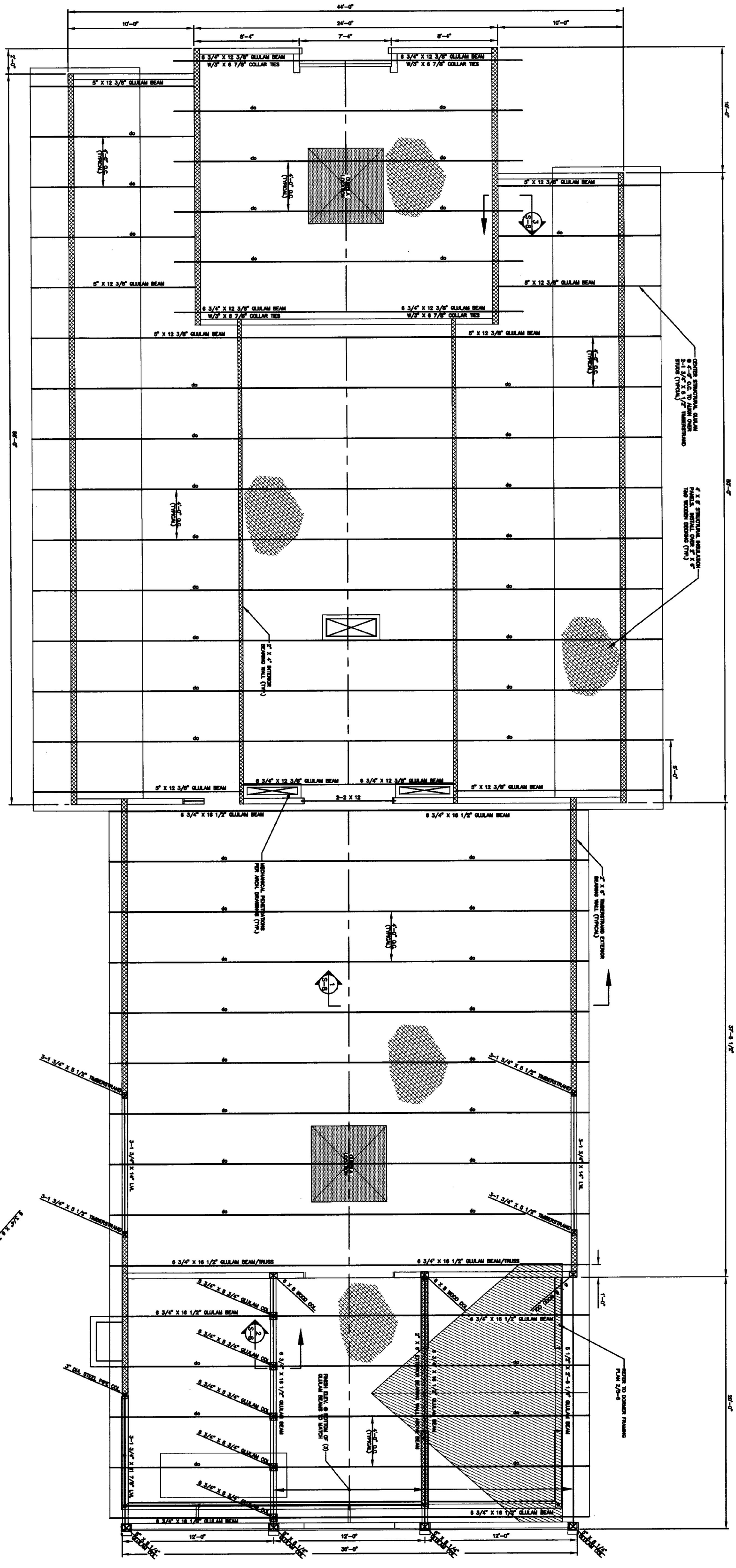

1/S-6 ROOF FRAMING PLAN
SCALE: 1/4" = 1'-0"

2/S-6 DORMER FRAMING PLAN
1/4" = 1'-0"

Graphic Scale
2 0 2 4 6 8 10 feet

INTERSTATE 89 SOUTHTHBOUND WILLISTON INFORMATION CENTER

ROOF FRAMING PLAN

WILLISTON — PROJECT # IM-BLDG(4) — VERMONT

CHAMPLAIN CONSULTING ENGINEERS
85 PRIM ROAD, P.O. BOX 453
COLCHESTER, VERMONT 05446
(802) 863-8060
(802) 864-1878 FAX

COPYRIGHT © 2001 CHAMPLAIN CONSULTING ENGINEERS ALL RIGHTS RESERVED

REVISIONS	BY

DRAWN CCE
CHECKED GJB
SCALE 1/4" =1'-0"
DATE 01/16/01
JOB NO. 93114
SHEET S6sb
OF 8 SHEETS

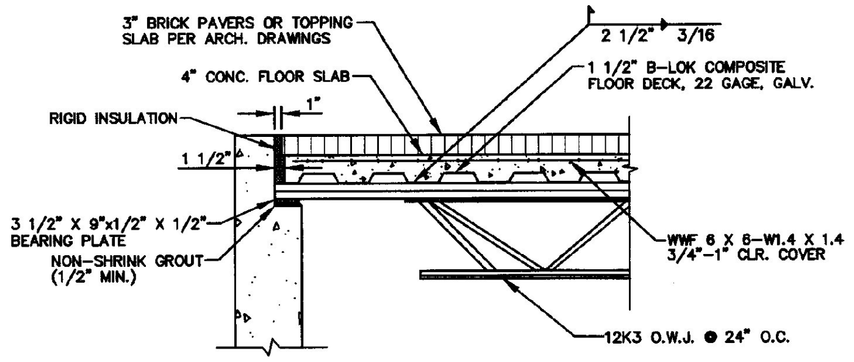

1 S-7 TYPICAL ENDWALL DETAIL
3/4" = 1'-0"

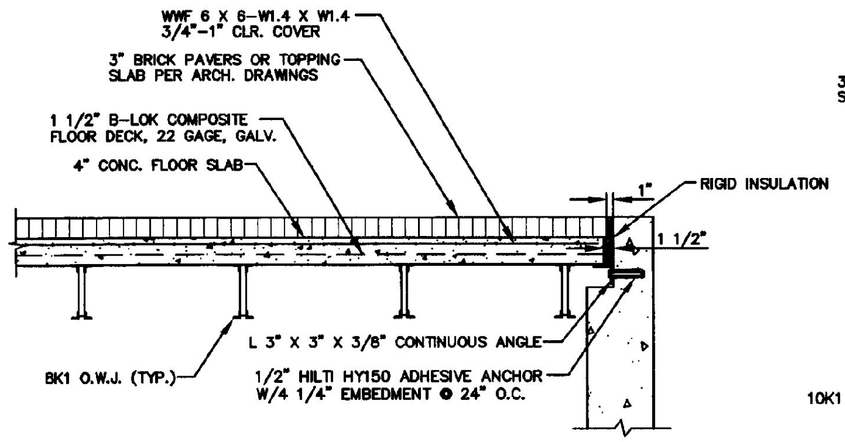

2 S-7 TYPICAL SIDEWALL DETAIL
3/4" = 1'-0"

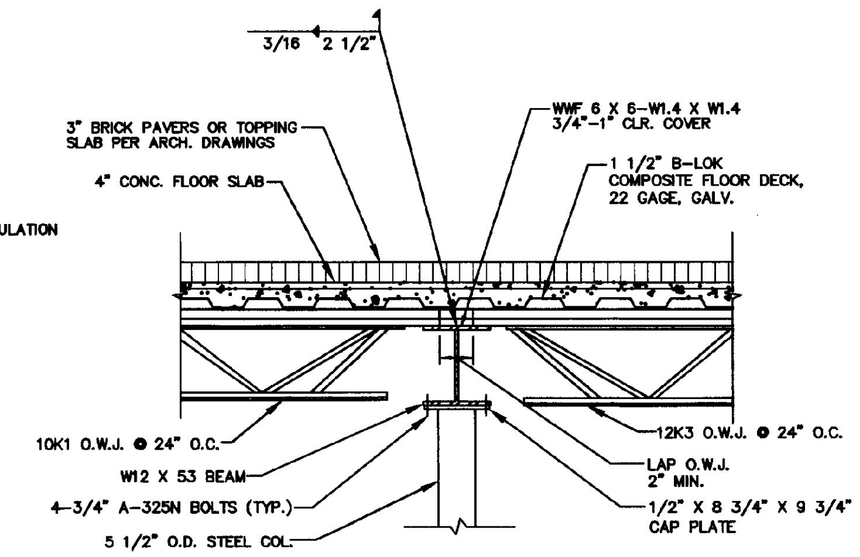

3 S-7 INTERIOR BEAM/JOIST DETAIL
3/4" = 1'-0"

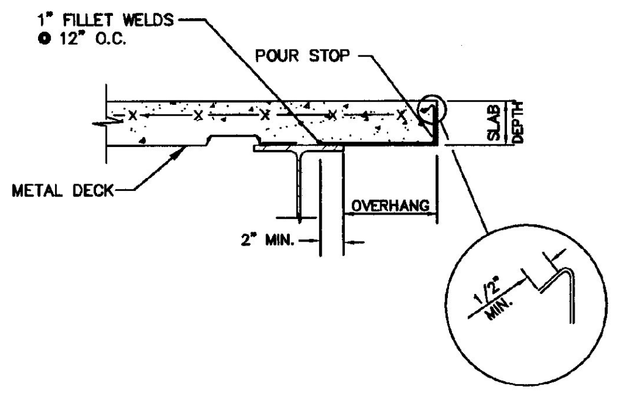

4 S-7 TYPICAL POUR STOP DETAIL
N.T.S.

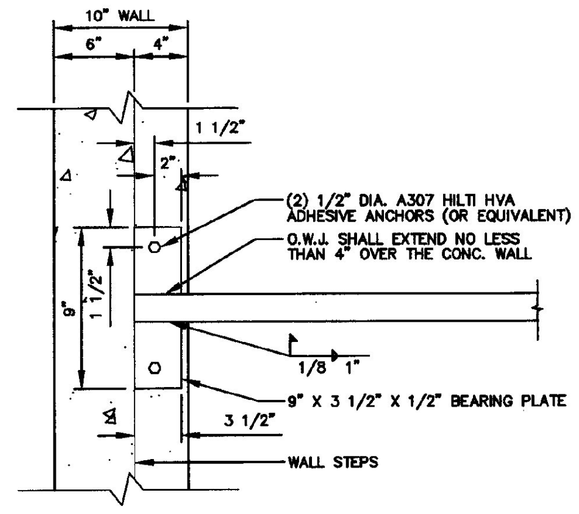

5 S-7 TYPICAL O.W.J. BEARING DETAIL
1 1/2" = 1'-0"

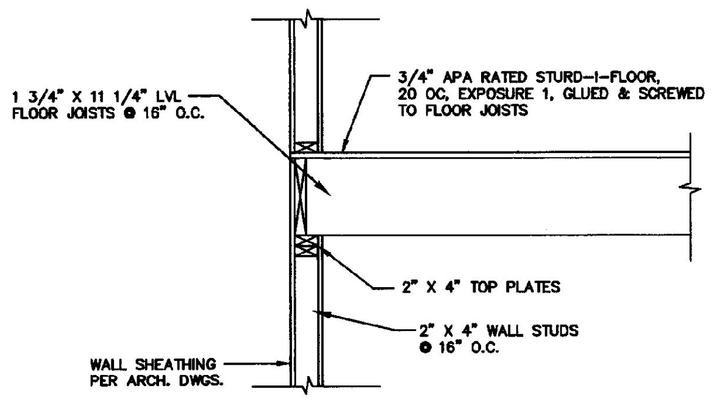

6 S-7 TYPICAL INTERIOR BEARING WALL FRAMING DETAIL
3/4" = 1'-0"

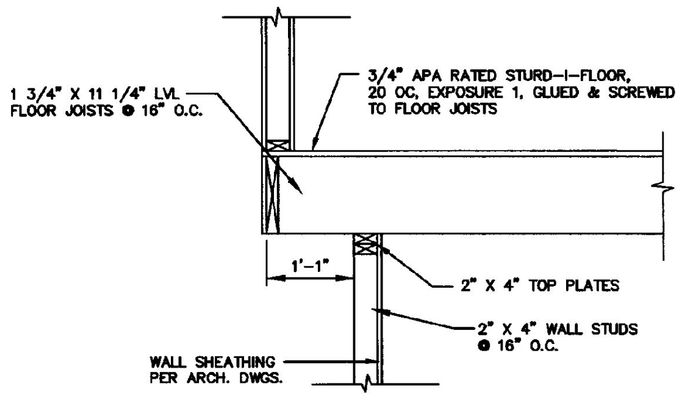

7 S-7 INTERIOR BEARING WALL CANTILEVER FRAMING DETAIL
3/4" = 1'-0"

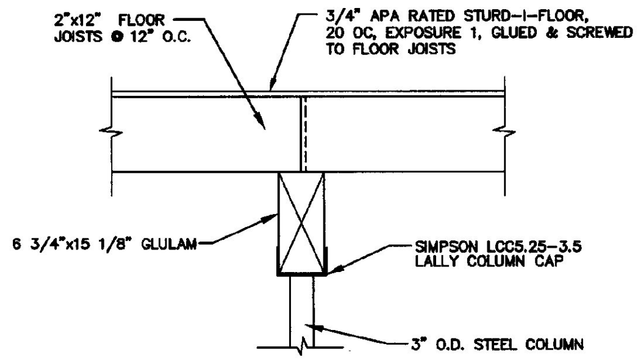

8 S-7 GLULAM BEAM BEARING DETAIL
3/4" = 1'-0"

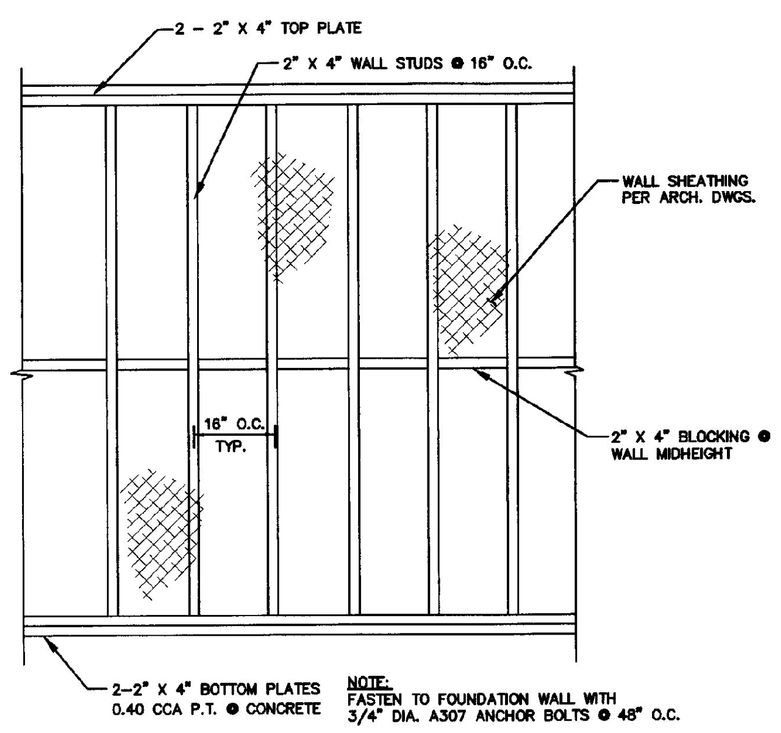

9 S-7 TYPICAL 2" x 4" INTERIOR BEARING WALL DETAIL
N.T.S.

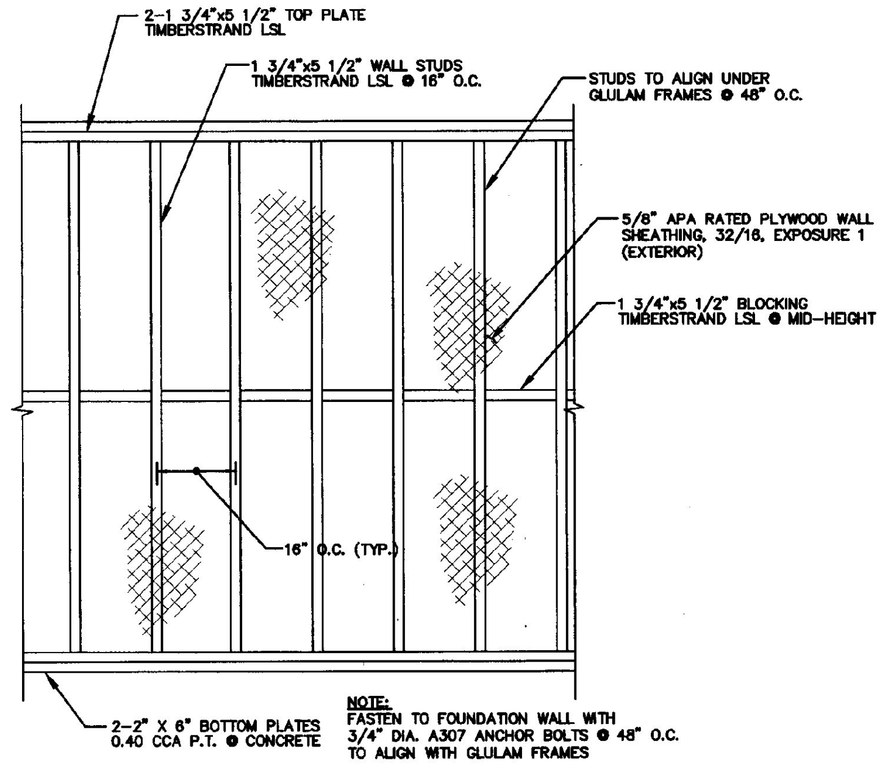

10 S-7 TYPICAL 2" x 6" EXTERIOR BEARING WALL DETAIL
N.T.S.

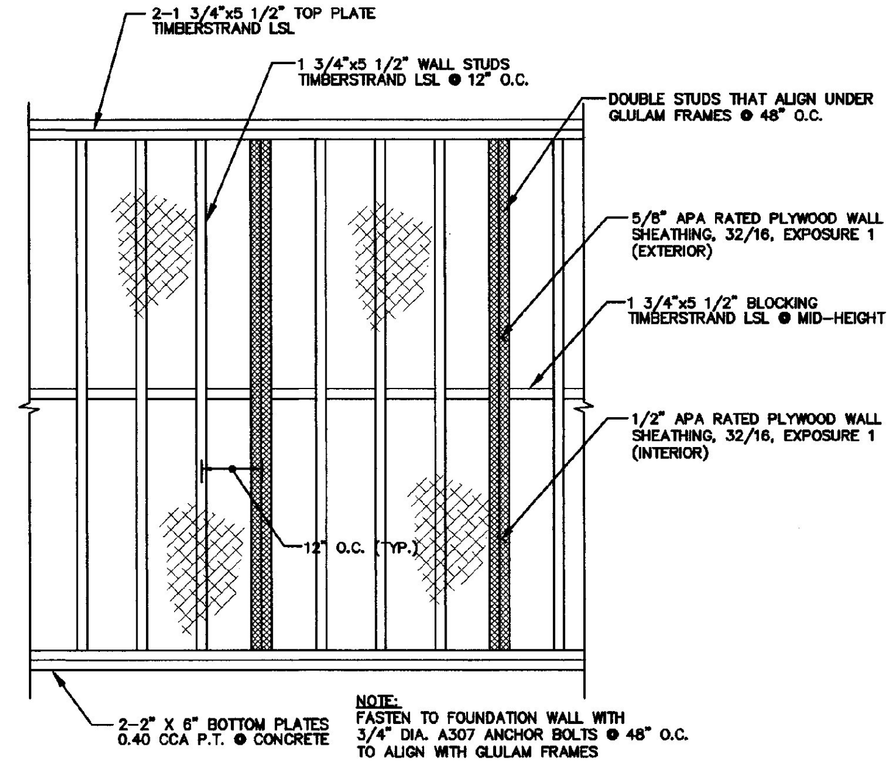

11 S-7 2" x 6" EXTERIOR BEARING WALL DETAIL @ GLULAM TRUSS
N.T.S.

REVISIONS	BY

COPYRIGHT © 2001
CHAMPLAIN CONSULTING ENGINEERS
ALL RIGHTS RESERVED

CHAMPLAIN CONSULTING ENGINEERS
85 PRIM ROAD, P.O. BOX 453
COLCHESTER, VERMONT 05446
(802) 863-6060
(802) 864-1978 FAX

STATE OF VERMONT
GREGORY J. BOMBARDIER
NO. 4496
REGISTERED
PROFESSIONAL ENGINEER

INTERSTATE 89 SOUTHBOUND
WILLISTON INFORMATION CENTER
STRUCTURAL DETAILS
PROJECT # IM-BLDG(4)
WILLISTON VERMONT

DRAWN	CCE
CHECKED	GJB
SCALE	AS NOTED
DATE	01/16/01
JOB NO.	93114
SHEET	S7sb
OF	8 SHEETS

BH File: \\Shbh\Jobs\pwk \\Southbound\93114-S7.dwg Plotted: 2001-01-15 08:41:42

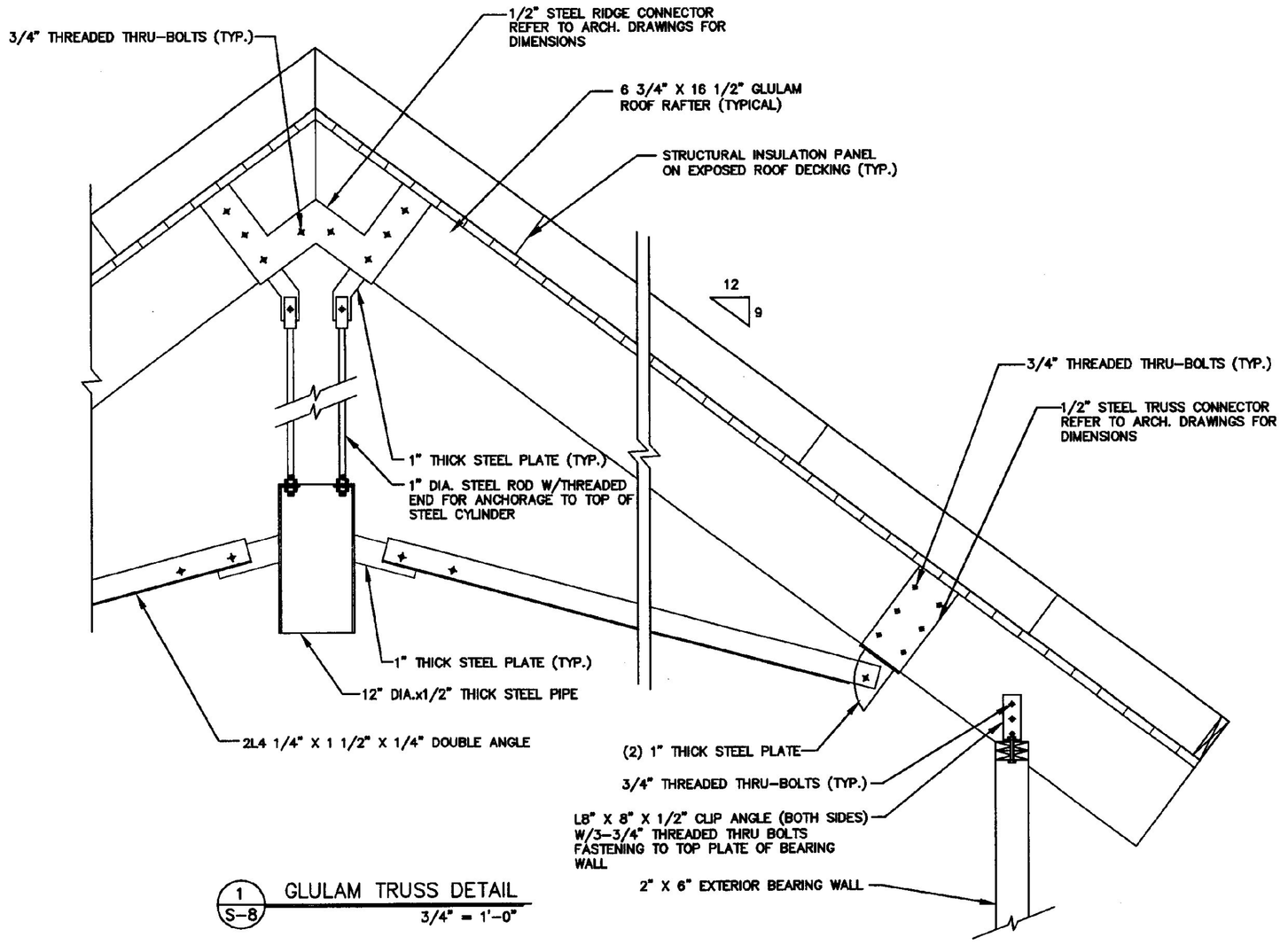

1 S-8 GLULAM TRUSS DETAIL
3/4" = 1'-0"

NOTE: REFER TO SHEET A-31 FOR ARCHITECTURAL DETAILS

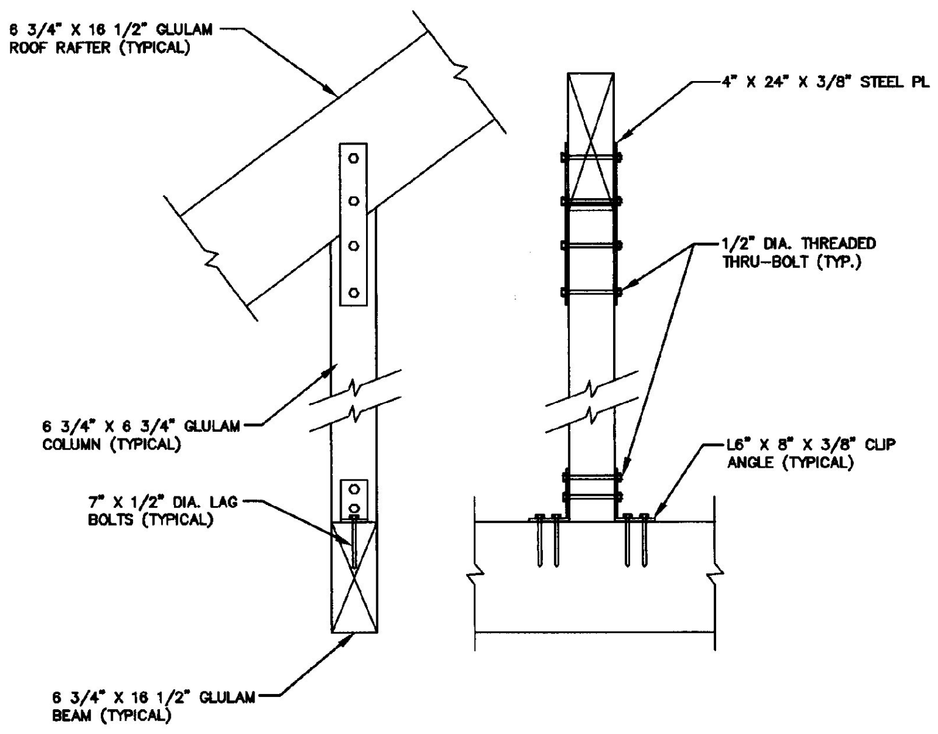

2 S-8 GLULAM RAFTER BRACKET DETAIL
3/4" = 1'-0"

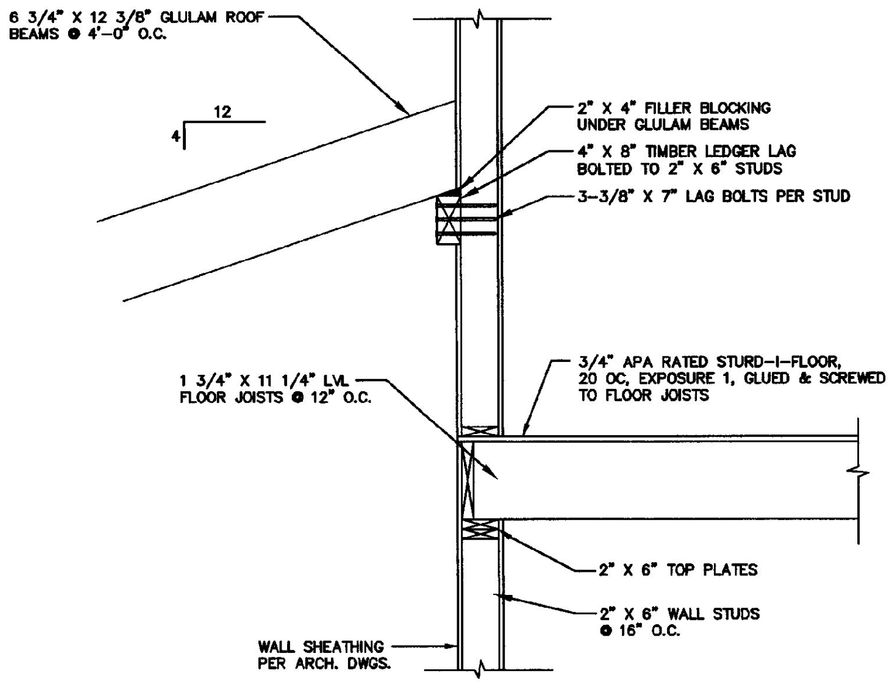

3 S-8 GLULAM LEDGER FRAMING DETAIL
3/4" = 1'-0"

REVISIONS	BY

COPYRIGHT © 2001
CHAMPLAIN CONSULTING ENGINEERS
ALL RIGHTS RESERVED

CHAMPLAIN CONSULTING ENGINEERS
85 PRIM ROAD, P.O. BOX 453
COLCHESTER, VERMONT 05446
(802) 863-8060
(802) 864-1878 FAX

STATE OF VERMONT
AUGUST J. BOMBARDIER
NO. 4496
REGISTERED
PROFESSIONAL ENGINEER

INTERSTATE 89 SOUTHBOUND
WILLISTON INFORMATION CENTER
STRUCTURAL DETAILS
PROJECT # IM-BLDG(4)
WILLISTON VERMONT

DRAWN	CCE
CHECKED	GJB
SCALE	AS NOTED
DATE	01/16/01
JOB NO.	93114
SHEET	S8sb

OF 8 SHEETS

BH File: \\Bills\Mydgn~1\All\Southbound\93114-S8.dwg Plotted: 2001-01-16 08:47:53

ABBREVIATIONS & SYMBOLS

AD	ACCESS DOOR
AFF	ABOVE FINISHED FLOOR
AFG	ABOVE FINISHED GRADE
AHU	AIR HANDLING UNIT
AP	ACCESS PANEL
BI	BACKWARD INCLINED
BIA	BACKWARD INCLINED AIRFOIL
BDD	BACKDRAFT DAMPER
BFP	BACKFLOW PREVENTER
CFM	CUBIC FEET PER MINUTE
CI	CAST IRON
CLG	CEILING
CO	CLEANOUT
CONN	CONNECTION
CUH	CABINET UNIT HEATER
CUF	CENTRIFUGAL UTILITY FAN
CW	COLD WATER
DB	DUCT BLOWER
DN	DOWN
E/A	EXHAUST AIR
EC	ELECTRICAL CONTRACTOR
EF	EXHAUST FAN
EXIST	EXISTING
F&T	FLOAT AND THERMOSTATIC
FC	FORWARD CURVED
FCO	FLOOR CLEANOUT
FD	FLOOR DRAIN
GC	GENERAL CONTRACTOR
GPM	GALLONS PER MINUTE
HB	HOSE BIBB
HW	HOT WATER
HWC	HOT WATER RECIRC.
LBS,#	POUNDS
MC	MECHANICAL CONTRACTOR
MOD	MOTOR OPERATED DAMPER
NC	NORMALLY CLOSED
NO	NORMALLY OPEN
NTS	NOT TO SCALE
OBD	OPPOSED BLADE DAMPER
O/A	OUTSIDE AIR
PF-C	PROPELLER FAN - COMMERCIAL
PRV	PRESSURE REDUCING VALVE
PSI	POUNDS PER SQUARE INCH
R/A	RETURN AIR
S/A	SUPPLY AIR
SIC	SQUARE INLINE CENTRIFUGAL FAN
SS	STAINLESS STEEL
UC	UNDERCUT DOOR
UH	UNIT HEATER
V	VENT
VB	VACUUM BREAKER
VD	VOLUME DAMPER
VTR	VENT THROUGH ROOF
W	SANITARY WASTE PIPING
WCO	WALL CLEANOUT
WHA	WATER HAMMER ARRESTOR

POINT OF DEACTIVATION OR NEW CONNECTION TO EXISTING

FTR-1	UNIT TYPE
1.0	FLOW (GPM)
8'-0"	ACTIVE LENGTH

FITTINGS & VALVES

EXISTING WORK TO REMAIN

NEW WORK ON PROPOSED DWGS. EXISTING WORK TO BE REMOVED ON DEMOLITION DWGS

EXPANSION LOOP

PIPE TURNING DOWN (PIPE DROP)

PIPE TURNING UP (PIPE RISE)

TEE UP (OFF TOP)

TEE DOWN (OFF BOTTOM)

PIPE DROP IN RUN

PIPE DROP AND TURN

TEE OF TOP

TEE OFF BOTTOM

CROSS AND RISER

PLAIN ELBOW

PLAIN TEE (OFF SIDE)

CONCENTRIC REDUCER

ECCENTRIC REDUCER

SCREWED UNION

FLANGED UNION

PIPE CAP

WALL SLEEVE

FLEX CONNECTION

PRESSURE GAUGE

TEMPERATURE GAUGE

PITCH PIPE DOWN

CLEANOUT END OF LINE

AUTOMATIC AIR VENT W/PETCOCK

PUMP

AUTOMATIC FLOW CONTROL

BALL OR BUTTERFLY (SIZE DEPENDENT)

CHECK

BALANCING

GATE

GLOBE VALVE

PLUG

PRESSURE REGULATING

RELIEF

TRIPLE DUTY

VALVE IN DROP BELOW

VALVE IN VERTICAL

2-WAY ELECTRIC MOTOR

3-WAY ELECTRIC MOTOR

WYE STRAINER W/VALVE

WATER HAMMER ARRESTOR

BACK FLOW PREVENTER

MANUAL VENT

HOSE BIBB (SIDE VIEW)

HOSE BIBB (PLAN VIEW)

PRESSURE REDUCING VALVE

PIPING

HWS	HOT WATER SUPPLY (HEATING)
HWR	HOT WATER RETURN (HEATING)
FOS	FUEL OIL SUPPLY PIPING
FOV	FUEL OIL VENT
FP	FIRE SPRINKLER PIPING
	DOMESTIC COLD WATER
	DOMESTIC HOT WATER
TW	TEMPERED WATER
	DOMESTIC HOT WATER RECIRC.
	SANITARY WASTE
	SANITARY WASTE BELOW FLOOR
	SANITARY WASTE VENT
	DIRECTION OF FLOW
PW	PUMPED WASTE

HVAC

SUPPLY AIR DUCT (RISE UP)

SUPPLY AIR DUCT (DROP DOWN)

RETURN AIR DUCT (RISE UP)

RETURN AIR DUCT (DROP DOWN)

EXHAUST DUCT (RISE UP)

EXHAUST DUCT (DROP DOWN)

6x6 DUCT SIZE (FIRST DIMENSION SIDE SHOWN)

R RISE IN DIRECTION OF FLOW

D DROP IN DIRECTION OF FLOW

ELBOW WITH TURNING VANES

DOUBLE WALL DUCT

END CAP

45° TAKE-OFF (RECTANGULAR)

TRANSITION (RECTANGLE TO ROUND)

TRANSITION (ROUND TO RECTANGLE)

CONCENTRIC REDUCER

ECCENTRIC REDUCER

VOLUME DAMPER

FIRE DAMPER

M MOTOR OPERATED DAMPER

FLEXIBLE CONNECTION

SUPPLY ARROW

RETURN ARROW

SUPPLY AIR DIFFUSER/REGISTER OR GRILLE

RETURN/EXHAUST AIR REGISTER OR GRILLE

T THERMOSTAT

400/200 HIGH SPEED/LOW SPEED CFM

STATE OF VERMONT
RICHARD C. MARA
NO. 7179
PROFESSIONAL ENGINEER
1/17/01

No.	DATE	REVISION

DUNCAN • WISNIEWSKI ARCHITECTURE
255 SOUTH CHAMPLAIN STREET, BURLINGTON, VERMONT 05401 (802) 864-6663

Hallam Associates
60 Farrell Street, Suite 300
So. Burlington, Vermont 05403
(802) 658-4891

WILLISTON INFORMATION CENTER
189 SOUTHBOUND
STATE PROJECT # IM-BLDG (4)

LEGEND AND ABBREVIATIONS

DRAWN: J.LAMOTHE	PROJ.No: 10215
CHECKED: M.COOK	DATE: JAN 15, 2001

HP-0sb

G:\Drawings\10215001\HP-0SB.DWG Monday, January 15, 2001 9:10:39 am jal

AIR HANDLING UNIT SCHEDULE

UNIT NUMBER	LOCATION	SERVES	DESIGN BASIS	MIN O/A (CFM)	SUPPLY FAN										COOLING COIL NUMBER	HEATING COIL NUMBER	RETURN FAN NUMBER	FILTERS				REMARKS
					FAN TYPE	WHEEL SIZE-TYPE	FLOW (CFM)	TOTAL SP(IN.)	RPM	BHP	MAX (dBA)	MOTOR HP	MOTOR VOLTS	MOTOR PH				INITIAL EFFICIENCY	INITIAL ORIENTATION	FINAL EFFICIENCY	FINAL ORIENTATION	
AHU-1	LOFT	BUILDING	MCQUAY CAH-014	1925	BLOW THRU	16.19-AF	7000	4.0"	2750	8.4	90	10	240	3	CC-1	HC-1	RF-1	30%	FLAT	N/A	N/A	MULTI ZONE UNIT

NOTES:
1. AIR FLOWS ARE NOMINAL AND INCLUDE A FACTOR FOR LEAKAGE. DETERMINE ACTUAL AIR FLOWS BASED ON BALANCING. SIZE COMPONENTS BASED ON NOMINAL FLOWS.
2. SUPPLY FAN MUST BE SIZED FOR NO LESS THAN INDICATED TOTAL S.P. USE HIGHER S.P. IF ACTUAL COMPONENTS RESULT IN HIGHER THAN PREDICTED VALUE FOR ANY COMPONENT.
3. RPM AND BHP MAY VARY BY NO MORE THAN 10% FROM INDICATED VALUE.
4. REFER TO AHU CONFIGURATION SCHEMATIC (H-4sb) FOR ARRANGEMENT OF COMPONENTS.

FAN SCHEDULE

UNIT NUMBER	SERVES	TYPE	DESIGN BASIS	LOCATION	AIR FLOW CFM	TOTAL S.P.	FAN RPM	ELECTRIC HP/W	ELECTRIC VOLTS	ELECTRIC PHASE	NOTES
EF-1	MAIN BATHROOMS	SIC	COOK-135-SQN-B	LOFT MECH.	1725	1.0"	1680	3/4	240	1	FLANGED INLET/OUTLET SPRING TYPE ISOLATORS, INSULATED HOUSING, BELT GUARD
EF-2	VESTIBULE BATHROOMS	DB-INLINE	COOK GEMINI GN-340	CLG	200	0.250"	1625	137 W	120	1	RUBBER IN SHEAR ISOLATORS
EF-3	FUEL OIL ROOM	DB-INLINE	COOK GEMINI GN-320	LOFT	150	0.375"	1360	77 W	120	1	RUBBER IN SHEAR ISOLATORS
EF-4	CRAWL SPACE	DB	COOK GEMINI GC-420	CRAWL SPACE	200	0.375"	1145	170 W	120	1	W/ALUM. GRILLE AND ISOLATOR KIT. PROVIDE LINE VOLTAGE HUMIDISTAT TO E.C. FOR WIRING
EF-5	LOFT & MECH ROOM	PWF-C	COOK SPD WALL PAC SIZE 14	LOFT	577	0.250"	1050	1/6	120	1	W/LINE VOLTAGE MOTORIZED DAMPER W/END SWITCH, WALL BOX & SCREEN PROVIDE 120V THERMOSTAT TO E.C. FOR WIRING (REV. ACTING)
RF-1	AHU-1	FC-DRAW-THRU	INTEGRAL WITH AHU-1	LOFT MECH.	5000	1.0"	1260	3	240	3	FORWARD CURVED DRAW-THRU CENTRIFUGAL FAN

NOTE: INSTALL ALL FANS WITH SPRING VIBRATION ISOLATORS AND FLEX DUCT CONNECTIONS.

DIFFUSER, REGISTER, AND GRILLE SCHEDULE

PLAN SYMBOL	DESCRIPTION	DESIGN BASIS	FINISH	NECK SIZE	CFM RANGE	ACCESSORIES	REMARKS
SD-1	EXPOSED ROUND DIFFUSER	METAL AIRE SERIES 3000, MODEL A-1	POLISHED ALUM	8"	140	OBD	SEE DIFFUSER CONNECTION DETAIL
SD-2	SURFACE MOUNTED SPOT DIFFUSER	SEIHO INTERNATIONAL PK SERIES	POLISHED ALUM	16"	520	-	SEE MOUNTING DETAIL
SD-3	EXPOSED SPOT DIFFUSER	SEIHO INTERNATIONAL PK SERIES	POLISHED ALUM	12"	240-250	-	SEE MOUNTING DETAIL
SD-4	SURFACE ROUND DIFFUSER	METAL AIRE SERIES 3000, MODEL A-1	POLISHED ALUM	6"	140	OBD	SEE DIFFUSER CONNECTION DETAIL
SD-5	SURFACE MOUNTED SPOT DIFFUSER	SEIHO INTERNATIONAL PK SERIES	POLISHED ALUM	18"	780	OBD	SEE DIFFUSER CONNECTION DETAIL
SR-1	SURFACE S/A REGISTER DOUBLE DEFL. TYPE	METAL AIRE MODEL V4004D	POLISHED ALUM	12x6	80-170	OBD (EXTRUDED ALUMINUM)	SEE EXPOSED REGISTER DUCT TAKE-OFF DETAIL
SR-2	SURFACE S/A REGISTER DOUBLE DEFL. TYPE	METAL AIRE MODEL H4004D	POLISHED ALUM	24x6	350	OBD (EXTRUDED ALUMINUM)	SEE ARCH. PLANS FOR BENCH MOUNTING POSITION FRONT BLADES FOR UPWARD THROW
TR-1	EXPOSED SPOT DIFFUSER (USED AS TRANSFER)	SEIHO INTERNATIONAL PK SERIES	POLISHED ALUM	16"	365-435	-	CONNECT TO WALL IN ACCORDANCE W/MANUFACTURER'S INSTRUCTIONS
ER-1	EXPOSED SPOT DIFFUSER (E/A)	SEIHO INTERNATIONAL PK SERIES	POLISHED ALUM	12"	260-265	-	SEE MOUNTING DETAIL
ER-2	EXPOSED SPOT DIFFUSER (E/A)	SEIHO INTERNATIONAL PK SERIES	POLISHED ALUM	10"	200	-	SEE MOUNTING DETAIL
ER-3	EXPOSED SPOT DIFFUSER (E/A)	SEIHO INTERNATIONAL PK SERIES	POLISHED ALUM	8"	100	-	SEE MOUNTING DETAIL
ER-4	EXPOSED SPOT DIFFUSER (E/A)	SEIHO INTERNATIONAL PK SERIES	POLISHED ALUM	10"	140	-	SEE MOUNTING DETAIL
RR-1	EXPOSED SPOT DIFFUSER (R/A)	SEIHO INTERNATIONAL PK SERIES	POLISHED ALUM	20"	1025	-	SEE MOUNTING DETAIL

EQUIPMENT SCHEDULE

PLAN SYMBOL	DESCRIPTION	DESIGN BASIS	CHARACTERISTICS	ELECTRIC	NOTES
CU-1 CU-2	AIR COOLED CONDENSING UNITS	MCQUAY CBA090-HA	NOMINAL 7 1/2 TONS, MINIMUM COOILING CAPACITY 95MB @ 87°F OAT AND 43°F SATURATED SUCTION TEMPERATURE	240-3PH MCA-34.4	SINGLE OR DUAL COMPRESSORS. PROVIDE ONE COMPRESSOR OF EACH UNIT WITH HOT GAS BYPASS
HRU-1	HEAT PIPE TYPE HEAT RECOVERY UNIT	QDT MODEL TRU-120	NOMINAL SIZE 48"Wx24" HIGH, SIX ROWS, BASED ON ENTERING EXHAUST 70°F/20%RH, ENTERING OUTSIDE-20°F, FROST THRESHOLD 1°F, LEAVING OUTSIDE AIR 20°F, OUTSIDE AIR CFM 1925, EXHAUST AIR CFM 1725 CFM OUTSIDE AIR PRESSURE DROP=0.65", EXHAUST AIR PRESSURE DROP=0.58"	115V	PROVIDE WITH INTEGRATED TILT PACKAGE TP-120-3F
LV-1	EXHAUST/RELIEF AIR LOUVER	ARROW MODEL EA-415-D	2 SECTIONS-1-RECTANGULAR: 5'-5 1/4"Wx4'-0"H, 1-TRIANGULAR, TYPE, (STYLE "E"): APPROX DIM: A=5'-5 1/4", B-15", C=24", MINIMUM TOTAL FREE AREA OF 18.0 SF	-	REFER TO ARCHITECTURAL PLANS COORDINATE FINAL DIMENSIONS W/G.C.
LV-2	OUTDOOR AIR LOUVER	ARROW MODEL EA-415-D	RECTANGULAR: 7'-0"Wx5'-4-1/2"H, MINIMUM FREE AREA OF 19.0 SF	-	REFER TO ARCHITECTURAL PLANS COORDINATE FINAL DIMENSIONS W/G.C.
LV-3	BOILER ROOM COMB. AIR (2 LOCATIONS) LOUVER	ARROW MODEL EA-415-D	RECTANGULAR: 1'-4"Wx4'-4"H, MINIMUM FREE AREA OF 2.6 SF	-	REFER TO ARCHITECTURAL PLANS COORDINATE FINAL DIMENSIONS W/G.C.
LV-4	BOILER ROOM COMB. AIR (2 LOCATIONS) LOUVER	ARROW MODEL EA-415-D	RECTANGULAR: 2'-8"Wx1'-4"Hx MINIMUM FREE AREA OF 1.3 SF	-	REFER TO ARCHITECTURAL PLANS COORDINATE FINAL DIMENSIONS W/G.C.
LV-5	VESTIBULE BATHROOM EXHAUST LOUVER	ARROW MODEL EA-415-D	SQUARE: 1'-0"x1'-0", MINIMUM FREE AREA OF 0.30 SF	-	REFER TO ARCHITECTURAL PLANS COORDINATE FINAL DIMENSIONS W/G.C.
FT1&2	FUEL OIL TANKS	HIGHLAND TANK - TOUGHTANK	275 GALLON CAPACITY EA., WITH SUPPORT LEGS, VENT, FILL, GAUGE & SUPPLY TAPPINGS 27"Wx44"Hx60"L	-	PROVIDE 2" BUSHING NEAR BOTTOM OF TANK FOR INTER-CONNECT PIPING
T-1	HOT WATER HEATING EXPANSION TANK	ARMSTRONG AX-60	TANK VOLUME = 33.6 GALS; ACC. VOLUME = 11.1 GALS.	-	PROVIDE 2" BUSHING NEAR BOTTOM OF TANK FOR INTER-CONNECT PIPING
T-2	HOT WATER EXPANSION TANK	AMTROL EXTROL MODEL 1500	COMBINATION PACKAGE W/EXTROL TANK, PURGER AND VENT 2 GAL. TANK 0.9 ACC VOLUME	-	PROVIDE 2" BUSHING NEAR BOTTOM OF TANK FOR INTER-CONNECT PIPING
F-1	FILTER SECTION (HRU-1)	FARR 30/30	NOMINAL 24x24, INITIAL RESISTANCE 0.28"	-	PROVIDE WITH TYPE 8 HOLDING FRAME
T-3	DOMESTIC HOT WATER EXPANSION TANK	AMTROL THERM-X-TROL MODEL ST-5	TANK VOLUME: 2.0 GALS; ACC VOLUME = 0.9 GALS.	-	MATERIALS COMPATIBLE FOR POTABLE WATER SYSTEM

HOT WATER BOILER SCHEDULE

UNIT NUMBER	GROSS OUTPUT I=B=R MBH	FUEL	FIRING RATE GPH	DRAFT TYPE	ASME PRESSURE RATING	LEAVING WATER TEMP.	REMARKS
B-1	257	#2 FUEL	2.55	FORCED	50	180	NOTE 1, 1/7HP, 120V-1PH, 2.4 AMPS
B-2	257	#2 FUEL	2.55	FORCED	50	180	NOTE 1, 1/7HP, 120V-1PH, 2.4 AMPS
B-3	75	#2 FUEL	0.70	FORCED	50	180	NOTE 2, 1/7HP, 120V-1PH, 2.4 AMPS

NOTE #1 - BASED ON WEIL-McLAIN (B-WGO-9). FURNISH W/ LWCO 30 PSI RELIEF VALVE, HIGH LIMIT, PACKAGE BOILER WITH BURNER (OB-300) AND CONTROLS. FURNISH FLEXIBLE S.S. OIL CONNECTION TO BURNERS, ELECTRICAL JUNCTION BOX WITH WIRING HARNESS. SEE SPECS.

NOTE #2 - BASED ON WEIL-McLAIN (B-WGO-2). FURNISH W/LWCO 30 PSI RELIEF VALVE, HIGH LIMIT, PACKAGE BOILER WITH BURNER (OB-180) AND CONTROLS. FURNISH FLEXIBLE S.S. OIL CONNECTION TO BURNERS. ELECTRICAL JUNCTION BOX WITH WIRING HARNESS. SEE SPECS.

UNIT HEATER SCHEDULE

UNIT NUMBER	MANUFACTURER & MODEL	TYPE UNIT	AIR CFM	BTUH	ENT. TEMP. F° AIR	ENT. TEMP. F° WATER	WATER GPM	P.D. (FT)	MOTOR HP	MOTOR ELECTRICAL	NOTES
UH-1	MODINE-HS-18	HORIZ.	340	10,970	60	180	1.5	0.5	16 MHP	120V-1PH	PROVIDE LINE VOLTAGE THERMOSTAT & AQUASTAT TO E.C. FOR WIRING
UH-2	MODINE HS-33	HORIZ.	630	20,100	60	180	2.5	0.2	1/25HP	120V-1PH	PROVIDE LINE VOLTAGE THERMOSTAT & AQUASTAT TO E.C. FOR WIRING

PUMP SCHEDULE

UNIT NUMBER	SYSTEM	LOCATION	MANUFACTURER & MODEL	GPM	(HEAD) FT	HP	ELECTRICAL	R.P.M.	NOTES
P-1	RADIATION	MECH. ROOM	ARMSTRONG SERIES 4360 SIZE 1-1/2D	25.5	45	1	240V-1PH	1750	
P-2	AHU-1	MECH. ROOM	ARMSTRONG SERIES 4360 SIZE 1-1/2D	28	45	1	240V-1PH	1750	
P-3	BACK-UP	MECH. ROOM	ARMSTRONG SERIES 4360 SIZE 1-1/2D	28	45	1	240V-1PH	1750	
P-4	DOM. HW HTR (B-3)	MECH. ROOM	ARMSTRONG SERIES H-41	13	15	1/4	120V-1PH	1750	
P-5	BOILER B-1	MECH. ROOM	ARMSTRONG SERIES H-32	12	10	1/6	120V-1PH	1750	
P-6	BOILER B-2	MECH. ROOM	ARMSTRONG SERIES H-32	12	10	1/6	120V-1PH	1750	

COOLING/HEATING COIL SCHEDULE

UNIT NUMBER	SERVES	DESIGN BASIS	FLUID	EAT Db (°F)	EAT Wb (°F)	LAT Db (°F)	LAT Wb (°F)	AIR FLOW (CFM)	MAX APD (IN)	MIN FACE (FT²)	FLUID FLOW (GPM)	EWT °F	LWT °F	MAX WPD (FT)	COIL ROWS	COIL FIN IN.	REMARKS
CC-1	AHU-1	MCQUAY 5EJ1104C	R-22	83.0	66.6	56.4	54.7	7000	0.75	14.0	N/A	N/A	N/A	N/A	4	11	COIL SELECTED AT SUCTION TEMPERATURE OF 43°F
HC-1	AHU-1	MCQUAY 5WH0803C	WATER	41	N/A	119	N/A	5300	0.75	7.6	28	180°F	148°F	6.4	3	11	.

FIN-TUBE RADIATION SCHEDULE

PLAN SYMBOL	BTUH/ FT	AVERAGE WATER TEMP °F	WTR FLOW GPM	HEIGHT (IN.)	LENGTH (FT.)	COLOR	MANUFACTURER & MODEL	REMARKS
HR-1	844	170	PLAN	11.5	PLAN	ARCH,	RUNTAL RF-4	SUBMIT COLOR CHART
HR-2	507	170	PLAN	11.5	PLAN	ARCH,	RUNTAL R-4	SUBMIT COLOR CHART
HR-3	4238	170	PLAN	84	PLAN	ARCH,	RUNTAL RS2-84	SUBMIT COLOR CHART
HR-4	863	170	PLAN	16	PLAN	ARCH,	RUNTAL RS2-16	SUBMIT COLOR CHART
HR-5	1650	170	PLAN	36	PLAN	ARCH,	RUNTAL RS2-36	SUBMIT COLOR CHART
HR-6	3938	170	PLAN	79	PLAN	ARCH,	RUNTAL RS2-78	SUBMIT COLOR CHART

FLOW CONTROL VALVES

PLAN SYMBOL	SIZE	GPM	PSID RANGE	DESIGN BASIS
V-1	1/2"	0.5	2-32	FDI AUTOFLOW
V-2	1/2"	1.0	2-32	FDI AUTOFLOW
V-3	1/2"	1.25	2-32	FDI AUTOFLOW
V-4	3/4"	1.5	2-3	FDI AUTOFLOW

STATE OF VERMONT
RICHARD A. WISNIEWSKI
NO. 7179
PROFESSIONAL ENGINEER
1/17/01

No.	DATE	REVISION

DUNCAN • WISNIEWSKI ARCHITECTURE
60 FARRELL STREET, BURLINGTON, VERMONT 05401 (802) 864-6883

Hallam Associates
60 Farrell Street, Suite 300
South Burlington, Vermont 05403
(802) 652-4821

WILLISTON INFORMATION CENTER
189 SOUTHBOUND
STATE PROJECT # IM-BLDG (4)

SCHEDULES

DRAWN:	PROJ.No:
J.LAMOTHE	10215
CHECKED:	DATE:
M.COOK	JAN 15, 2001

H-1sb

G:\Drawings\1021500\h-1sb.dwg Monday, January 15, 2001 9:55:43 am jpl

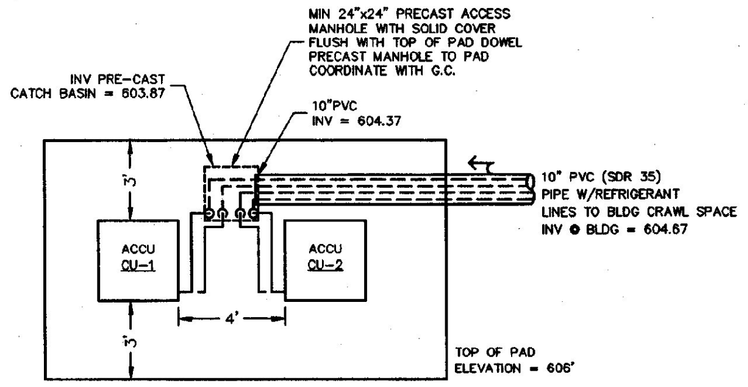

PLAN OF ACCU LAYOUT AT CONCRETE PAD
SCALE: 1/4"=1'-0"

NOTES:

1. PROVIDE MIN. 6" COMPACTED CRUSHED STONE BENEATH ACCESS MANHOLE.
2. SEAL WATERTIGHT REFRIGERANT LINE PENETRATIONS INTO ACCESS MANHOLE.

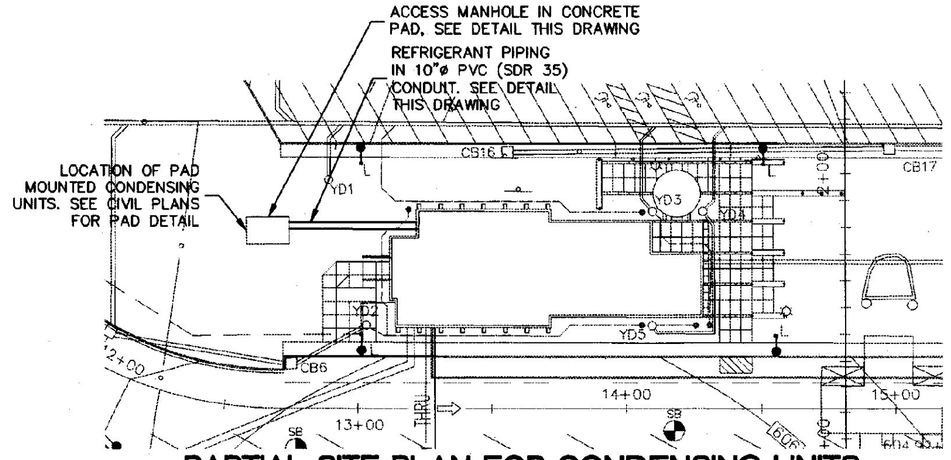

PARTIAL SITE PLAN FOR CONDENSING UNITS
SCALE: 1" = 40'-0"

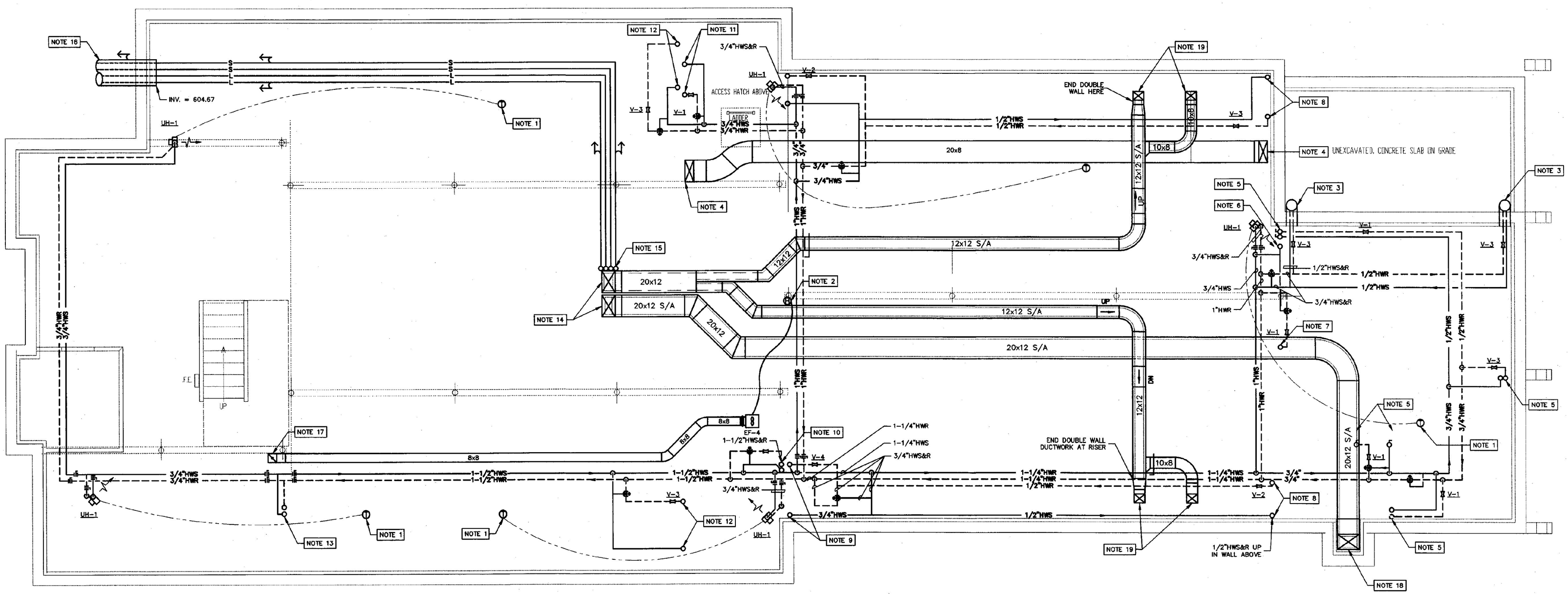

CRAWL SPACE HVAC PLAN
SCALE: 1/4"=1'-0"

NOTES:

1. MECHANICAL CONTRACTOR TO PROVIDE LINE VOLTAGE THERMOSTATS TO ELECTRICAL CONTRACTOR FOR MOUNTING AND WIRING. MECHANICAL CONTRACTOR TO FURNISH AND INSTALL LINE VOLTAGE AQUASTAT ON PIPING, ELECTRICAL CONTRACTOR TO WIRE.
2. MECHANICAL CONTRACTOR TO PROVIDE LOW VOLTAGE HUMIDISTAT TO ELECTRICAL CONTRACTOR FOR MOUNTING AND WIRING.
3. 6" PVC CONDUIT FROM CRAWL SPACE BELOW SLAB TO VESTIBULE. SEE DETAIL B ON DRAWING H-3SB. ROUTE 1/2"HWS&R THROUGH CONDUIT.
4. 20x8S/A DUCT UP. FOR CONTINUATION SEE DRAWING H-3SB.
5. 1/2"HWS&R UP TO HR-1. SEE DRAWING H-3SB FOR CONTINUATION.
6. 1/2"HWS UP TO HR-4 (IN CUPOLA). SEE DRAWING H-3SB FOR CONTINUATION.
7. 1/2"HWR UP TO HR-4 (IN CUPOLA). SEE DRAWING H-3SB FOR CONTINUATION.
8. 1/2"HWS&R UP TO HR-3. SEE DRAWING H-3SB FOR CONTINUATION.
9. 3/4"HWS&R UP TO HR-3. SEE DRAWING H-3SB FOR CONTINUATION.
10. 1/2"HWS&R UP TO HR-2. SEE DRAWING H-3SB FOR CONTINUATION.
11. 1/2"HWS&R UP TO HR-5. SEE DRAWING H-3SB FOR CONTINUATION.
12. 1/2"HWS&R UP TO HR-6. SEE DRAWING H-3SB FOR CONTINUATION.
13. 2"HWS&R UP TO MECHANICAL ROOM. SEE DRAWING H-3SB FOR CONTINUATION.
14. (2) 20x12 S/A DUCTS UP INTO CHASE ABOVE. SEE DRAWING H-3SB FOR CONTINUATION.
15. REFRIGERANT LINES (2) SUCTION AND (2) LIQUID UP TO CHASE ABOVE. SEE DRAWING H-3SB FOR CONTINUATION. PROVIDE SUCTIONS TRAPS AT BASE OF RISER PER ACCU MANUFACTURER'S RECOMMENDATIONS.
16. REFRIGERANT PIPING IN 10"PVC (SDR 35) CONDUIT FROM FOUNDATION WALL TO ACCESS MANHOLE AT CONDENSING UNITS. SEE PARTIAL SITE PLAN (THIS DRAWING) FOR CONTINUATION.
17. 8x8 E/A DUCT UP TO MECHANICAL ROOM. SEE DRAWING H-3SB FOR CONTINUATION. PROVIDE FIRE DAMPER AT FLOOR PENETRATION.
18. 20x12 S/A DUCT UP INTO CHASE ABOVE. SEE DRAWING H-3SB FOR CONTINUATION.
19. 10x8 S/A DUCT UP INTO BENCH PLENUM ABOVE. SEE DRAWING H-3SB FOR CONTINUATION. COORDINATE EXACT LOCATIONS OF OPENINGS WITH GENERAL CONTRACTOR.

G:\Drawings\10215001\H-2SB.dwg Monday, January 15, 2001 8:06:12 am jpl

STATE OF VERMONT
RICHARD C. NAMARA
NO. 7179
REGISTERED PROFESSIONAL ENGINEER
1/17/01

No.	DATE	REVISION

DUNCAN • WISNIEWSKI ARCHITECTURE
255 SOUTH CHAMPLAIN STREET, BURLINGTON, VERMONT 05401 (802) 864-6666

Hallam Associates
60 Parrell Street, Suite 300
So. Burlington, Vermont 05403
(802) 658-4891

WILLISTON INFORMATION CENTER
189 SOUTHBOUND
STATE PROJECT # IM-BLDG (4)

CRAWL SPACE HVAC PLAN

DRAWN:	PROJ.No:
J.LAMOTHE	10215
CHECKED:	DATE:
M.COOK	JAN 15, 2001

H-2sb

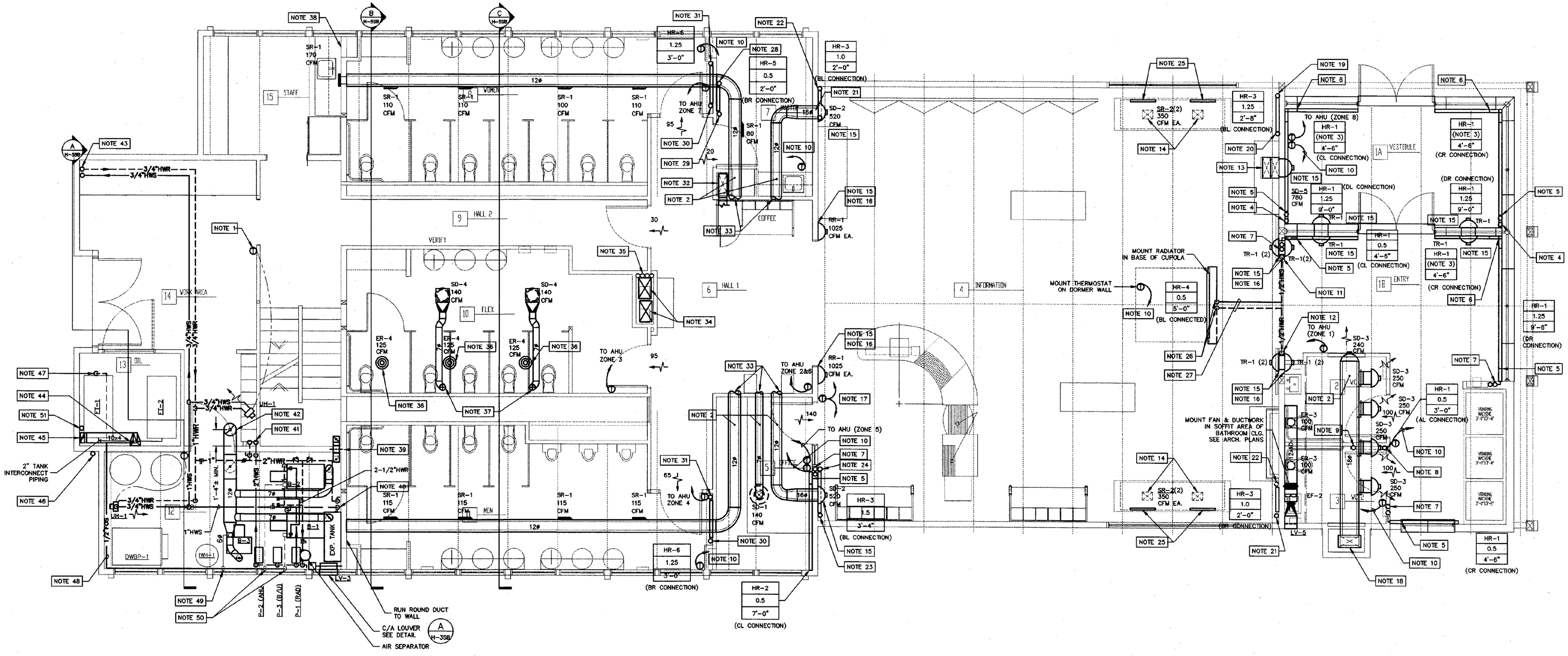

MAIN FLOOR HVAC PLAN

SCALE: 1/4"=1'-0"

NOTES:

1. MECHANICAL CONTRACTOR SHALL PROVIDE LINE VOLTAGE THERMOSTATS TO ELECTRICAL CONTRACTOR FOR MOUNTING AND WIRING. MECHANICAL CONTRACTOR TO FURNISH AND INSTALL LINE VOLTAGE AQUASTAT ON PIPING, ELECTRICAL CONTRACTOR TO WIRE.
2. ALL EXPOSED DOUBLE WALL DUCTWORK AT THIS LEVEL SHALL BE SPIRAL TYPE CONSTRUCTED OF ALUMINUM. SEE SPECIFICATIONS.
3. RADIATORS ARE IN SERIES (3 LOCATIONS) CONNECTED WITH END TRIM. GPM SHOWN FOR THIS SECTION IS THE SAME AS CONNECTED SECTION.
4. 1/2"HWS&R UP FROM CRAWL SPACE THROUGH BELOW SLAB PVC CONDUIT. SEE DETAIL B ON DRAWING H-3SB.
5. PROVIDE 12" LONG RADIATOR MANUFACTURER SUPPLIED END TRIM.
6. PROVIDE 12"x12" LONG RADIATOR MANUFACTURER SUPPLIED INSIDE CORNER TRIM.
7. 1/2"HWS&R UP IN WALL FROM CRAWL SPACE BELOW. SEE DRAWING H-2SB FOR CONTINUATION. ROUTE PIPING INSIDE WALL AND CONNECT TO RADIATOR PER DETAIL ON DRAWINGS H-9SB.
8. 1/2"HWS UP FROM CRAWL SPACE BELOW. SEE DRAWING H-2SB FOR CONTINUATION. CONNECT DIRECTLY TO RADIATOR. PROVIDE RADIATOR MANUFACTURER SUPPLIED VERTICAL PIPE TRIM FOR PIPING ABOVE SLAB.
9. 1/2"HWR UP FROM CRAWL SPACE BELOW. SEE DRAWING H-2SB FOR CONTINUATION. CONNECT DIRECTLY TO RADIATOR. PROVIDE RADIATOR MANUFACTURER SUPPLIED VERTICAL PIPE TRIM FOR PIPING ABOVE SLAB.
10. TO CONTROL VALVE IN HW LINE IN CRAWL SPACE. SEE DRAWING H-2SB.
11. 1/2"HWS UP FROM CRAWL SPACE BELOW. SEE DRAWING H-2SB FOR CONTINUATION. ROUTE PIPING INSIDE WALL TO PEAK.
12. 1/2"HWR UP FROM CRAWL SPACE BELOW. SEE DRAWING H-2SB FOR CONTINUATION. ROUTE PIPING INSIDE WALL TO PEAK.
13. 20x8 S/A DUCT UP FROM CRAWL SPACE BELOW. SEE H-2SB FOR CONTINUATION. IMMEDIATELY ABOVE FLOOR PENETRATION OFFSET DUCTWORK BACK TO WALL TO MINIMIZE INTRUSION WITHIN DISPLAY CASE.
14. 10x8 S/A DUCTS UP FROM CRAWL SPACE. SEE H-2SB FOR CONTINUATION. TERMINATE DUCTS OPEN ENDED INTO PLENUM BELOW SEAT AT FLOOR PENETRATION. SEE ARCHITECTURAL DETAILS OF PLENUM.
15. FOR ELEVATION OF WALL MOUNTED DIFFUSER, RETURN REGISTER OR TRANSFER GRILLE, SEE ARCHITECTURAL DRAWINGS.
16. (2) RETURN REGISTERS (OR TRANSFER GRILLES) ALIGNED VERTICALLY. SEE ARCHITECTURAL DRAWINGS.
17. THIS THERMOSTAT CONTROLS (2) CONTROL VALVES SERVING (4) HR-3'S IN INFORMATION AREA.
18. 20x12 S/A DUCT DOWN TO CRAWL SPACE. SEE DRAWING H-2SB FOR CONTINUATION.
19. 1/2"HWS UP FROM CRAWL SPACE BELOW. SEE DRAWING H-2SB FOR CONTINUATION. OFFSET PIPING BACK TO WALL AND CONNECT TO HR-3.
20. 1/2"HWR UP FROM CRAWL SPACE BELOW. SEE DRAWING H-2SB FOR CONTINUATION. OFFSET PIPING BACK TO WALL AND CONNECT TO HR-3.
21. 1/2"HWS UP FROM CRAWL SPACE BELOW. SEE DRAWING H-2SB FOR CONTINUATION. CONNECT TO HR-3.
22. 1/2"HWR UP FROM CRAWL SPACE BELOW. SEE DRAWING H-2SB FOR CONTINUATION. CONNECT TO HR-3.
23. 3/4"HWS UP FROM CRAWL SPACE BELOW. SEE DRAWING H-2SB FOR CONTINUATION. CONNECT TO HR-3.
24. 3/4"HWR UP FROM CRAWL SPACE BELOW. SEE DRAWING H-2SB FOR CONTINUATION.
25. REGISTERS LOCATED IN REAR (WINDOW SIDE) OF BENCH. SEE ARCHITECTURAL DETAILS FOR EXACT LOCATIONS.
26. 1/2"HWS&R PIPING TO RISE UP AND RUN HORIZONTALLY DIRECTLY BELOW HR-2. SHOWN OFFSET FOR DRAFTING CLARITY ONLY.
27. PIPING TO RUN AT PEAK. COORDINATE OPENINGS IN ROOF TRUSSES WITH GENERAL CONTRACTOR. SEE ARCHITECTURAL PLANS.
28. 1/2"HWS UP FROM CRAWL SPACE BELOW. SEE DRAWING H-2SB FOR CONTINUATION. CONNECT TO HR-5.
29. 1/2"HWR UP FROM CRAWL SPACE BELOW. SEE DRAWING H-2SB FOR CONTINUATION. CONNECT TO HR-5.
30. 1/2"HWS UP FROM CRAWL SPACE BELOW. SEE DRAWING H-2SB FOR CONTINUATION. CONNECT TO HR-6.
31. 1/2"HWR UP FROM CRAWL SPACE BELOW. SEE H-2SB FOR CONTINUATION. CONNECT TO HR-6.
32. 20x8 S/A DUCT UP FROM CRAWL SPACE BELOW. SEE H-2SB FOR CONTINUATION.
33. FOR CONTINUATION OF S/A DUCTWORK SEE LOFT PLAN, DRAWING H-4SB.
34. (2) 20x12 S/A DUCTS UP FROM CRAWL SPACE BELOW AND UP TO LOFT. SEE DRAWINGS H-2SB AND H-4SB FOR CONTINUATION. ROUTE DUCTWORK INSIDE CHASE.
35. (2) REFRIGERANT SUCTION AND (2) REFRIGERANT LIQUID LINES FROM CRAWL SPACE BELOW AND UP TO LOFT. SEE DRAWINGS H-2SB AND H-4SB FOR CONTINUATION. RUN PIPING INSIDE CHASE.
36. 10"ø E/A DUCT DOWN FROM LOFT. SEE DRAWING H-4SB FOR CONTINUATION.
37. 7"ø S/A DUCT DOWN FROM LOFT. SEE DRAWING H-4SB FOR CONTINUATION. ROUTE SINGLE WALL DUCTWORK IN CEILING SPACE (BETWEEN JOISTS) TO DIFFUSERS AS SHOWN.
38. ROUTE ROUND DUCTWORK TO WALL. PROVIDE 12x6 CONNECTION TO SR-1 THROUGH WALL.
39. 8x8 E/A DUCT UP FROM CRAWL SPACE BELOW. SEE DRAWING H-2SB FOR CONTINUATION. ROUTE DUCTWORK THROUGH BOILER ROOM WALL (PROVIDE FIRE DAMPER AT WALL PENETRATION) AND UP. SEE DRAWING H-4SB FOR CONTINUATION.
40. 2"HWS&R UP FROM CRAWL SPACE BELOW. SEE DRAWING H-2SB FOR CONTINUATION.
41. 2"HWS&R UP. SEE DRAWING H-4SB FOR CONTINUATION.
42. 12"ø BOILER FLUE UP. SEE DRAWING H-4SB FOR CONTINUATION.
43. 3/4"HWS&R UP. SEE DRAWING H-4SB FOR CONTINUATION.
44. 10x4 E/A DUCT DOWN TO 8"± AFF. TERMINATE OPEN ENDED. ROTATE ORIENTATION OF DUCTWORK AND ROUTE AS SHOWN.
45. 10x4 E/A DUCT UP THROUGH ROOF OF FUEL TANK STORAGE ROOM. PROVIDE FIRE DAMPER AT PENETRATION. SEE DRAWING H-4SB FOR CONTINUATION OF DUCTWORK.
46. 2" OIL FILL PIPE WITH LOCKABLE CAP.
47. 1/2"FOS. ROUTE UNDER STORAGE TANK.
48. ROUTE 1/2" FOS PIPING 12" AFF.
49. ROUTE FOS PIPING TO B-3 ON FLOOR.
50. ROUTE FOS PIPING TO B-1 AND B-2 IN FLOOR SLAB.
51. 1-1/2" FUEL OIL VENT UP. SEE DRAWING H-4SB FOR CONTINUATION.

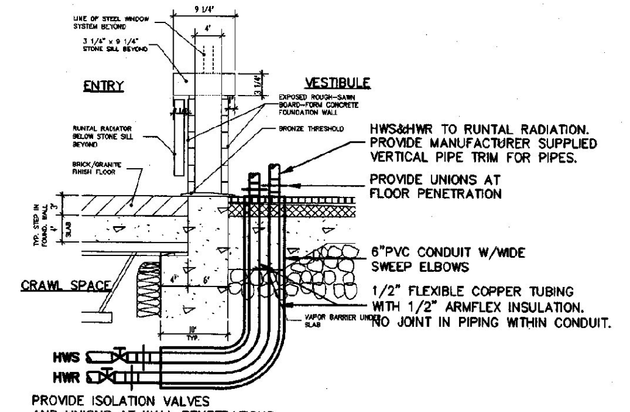

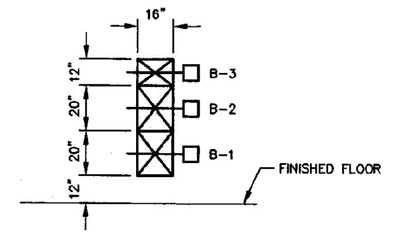

A LOW COMBUSTION AIR LOUVER DETAIL (LV-3)

A H-3SB SCALE: 1/4"=1'-0"

G:\Drawings\1021500\h-3sb.dwg Monday, January 15, 2001 9:56:40 am jol

STATE OF VERMONT RICHARD J. LAMARA NO. 7179 PROFESSIONAL ENGINEER
1/15/01

No.	DATE	REVISION

DUNCAN • WISNIEWSKI ARCHITECTURE
255 SOUTH CHAMPLAIN STREET, BURLINGTON, VERMONT 05401 (802) 864-0663

Hallam Associates
60 Parrell Street, Suite 300
So. Burlington, Vermont 05403
(802) 659-4891

WILLISTON INFORMATION CENTER
189 SOUTHBOUND
STATE PROJECT # IM-BLDG (4)

MAIN FLOOR HVAC PLAN

DRAWN:	PROJ.No:
J.LAMOTHE	10215
CHECKED:	DATE:
M.COOK	JAN 15, 2001

H-3sb

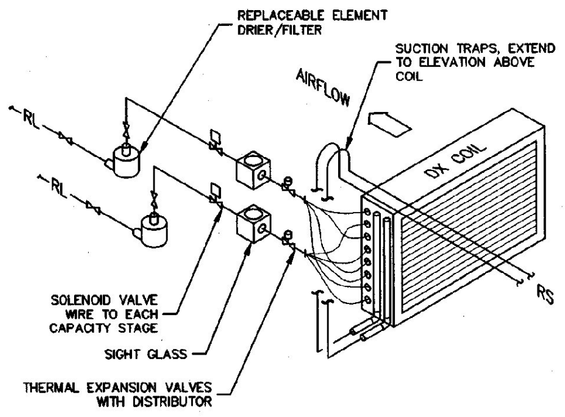

DX COIL PIPING DETAIL - (SPLIT FACE)
SCALE: NONE

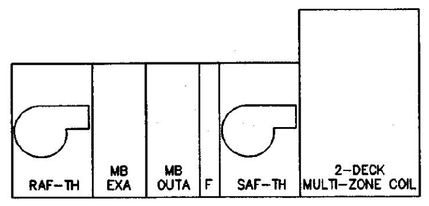

AHU-1 CONFIGURATION
SCALE: NONE

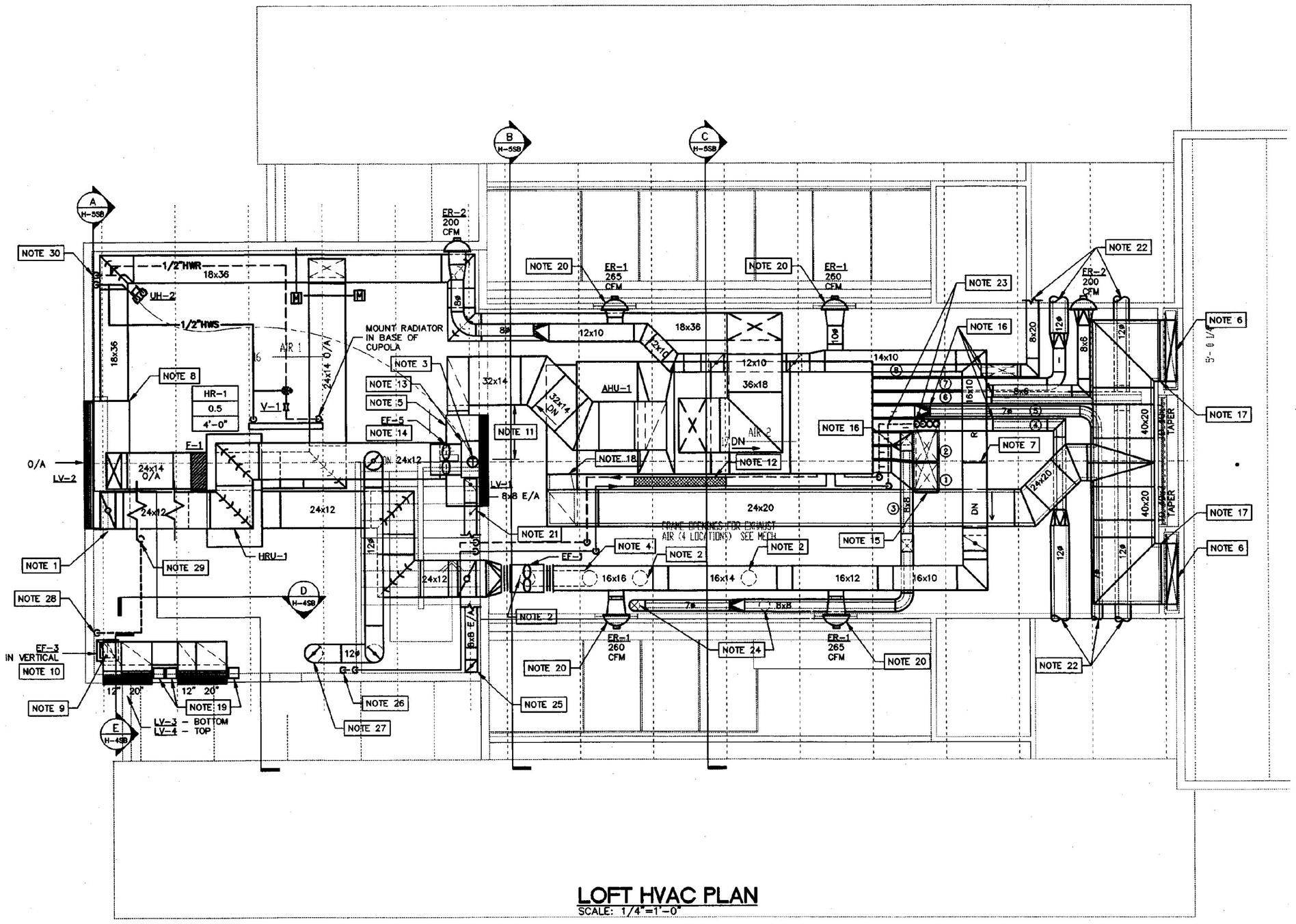

LOFT HVAC PLAN
SCALE: 1/4"=1'-0"

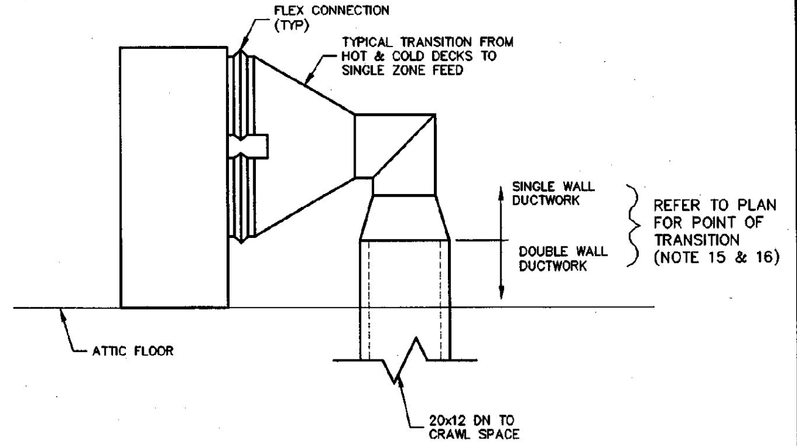

ELEVATION OF MUTI-ZONE DUCT CONNECTIONS
SCALE: 1/2"=1'-0"

NOTES:

CONNECTION SHOWN FOR 20x14 AND 14x14 DUCTS TO CRAWL SPACE (WORST CASE TRANSITIONS).

SINGLE ZONE DUCT SIZES: DOWNSTREAM OF HOT/COLD DECK TRANSITION

ZONE ①	20"X12"	ENTRY
ZONE ②	20"X12"	INFORMATION (BENCHES)
ZONE ③	8"x8"	FLEX BATHROOM
ZONE ④	8"x14" TO 12"ø	MEN'S BATHROOM
ZONE ⑤	7"ø	OFFICE
ZONE ⑥	8"x20" TO (2) 12"ø	INFORMATION (NOZZLES)
ZONE ⑦	8"x18" TO 12"ø	WOMEN'S BATHROOM/STAFF
ZONE ⑧	8"X20"	VESTIBULE

NOTE: ALL CONNECTIONS TO HOT AND COLD DECKS ARE 8"x20". PROVIDE BALANCING DAMPERS IN DUCTWORK TO BALANCE FLOWS AS SHOWN ON THE PLANS.

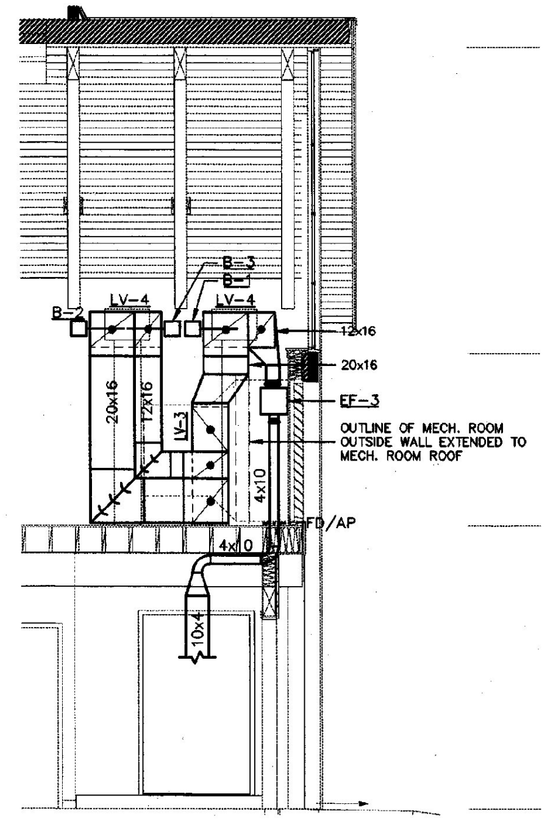

HIGH COMBUSTION AIR LOUVER DETAIL (LV-3/LV-4)
D H-4SB SCALE: 1/4"=1'-0"

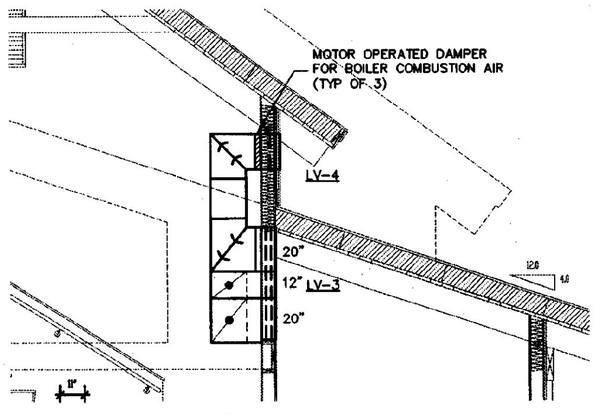

HIGH COMBUSTION AIR LOUVER DETAIL (LV-3/LV-4)
E H-4SB SCALE: 1/4"=1'-0"

NOTES:

1. 24x12 E/A DUCT TO RISE, TURN BACK TIGHT TO THE TOPSIDE OF HRU-1, AND ROUTE TO E/A PLENUM BEHIND LV-1.
2. 10"ø E/A DOWN TO MAIN FLOOR. FOR CONTINUATION SEE DRAWING H-3SB.
3. MECHANICAL CONTRACTOR SHALL PROVIDE LINE VOLTAGE THERMOSTATS TO ELECTRICAL CONTRACTOR FOR MOUNTING AND WIRING. M.C. TO FURNISH AND INSTALL LINE VOLTAGE AQUASTAT ON PIPING, E.C. TO WIRE.
4. OFFSET E/A DUCT FROM MAIN TO FLOOR PENETRATION UNDER EF-1.
5. PROVIDE 60"Wx48"Hx24"DEEP PLENUM FOR E/A AND RELIEF AIR TO LEAVE THROUGH LV-1.
6. 40x7 R/A UP IN CHASE TO RETURN AIR FROM INFORMATION AREA. COORDINATE INSTALLATION WITH G.C.
7. ROUTE 16"x10" E/A DUCT UP IN BETWEEN CEILING JOISTS, FOLLOWING CONTOUR OF CEILING. REFER TO LOFT STRUCTURAL PLAN FOR COORDINATION PURPOSES.
8. PROVIDE 84"Wx64"Hx24"DEEP O/A PLENUM FOR LV-2.
9. 10x4 E/A DOWN TO FUEL OIL ROOM. SEE DRAWING H-3SB FOR CONTINUATION.
10. EF-3 MOUNTED SUCH THAT E/A DUCTWORK PASSES OVER TOP OF C/A DUCTWORK. SEE SECTION D THIS DRAWING.
11. MAINTAIN MINIMUM 3'-0" WIDE CLEAR SPACE AT TOP OF STAIR FOR ACCESS INTO LOFT MECHANICAL ROOM.
12. LOCATION OF HW COIL CONTROL VALVE PIPING TRAIN ABOVE UNIT ADJACENT TO RELIEF AIR AND O/A DUCT CONNECTIONS. SEE PIPING SCHEMATICS DRAWING H-8SB.
13. 24x24 E/A PLENUM ATTACHED TO UNUSED PORTION OF E/A LOUVER (LV-1) ABOVE HVAC E/A PLENUM.
14. MOUNT EF-5 TO 24x24 PLENUM ABOVE HVAC E/A PLENUM. SEE WALL FAN DETAIL, DRAWING H-5SB.
15. TRANSITION TO 20x12 DOUBLE WALL DUCTWORK DOWNSTREAM OF VERTICAL ELBOWS (REFER TO MULTI-ZONE DUCT DETAIL). FOR CONTINUATION SEE DRAWING H-3SB.
16. TRANSITION FROM SINGLE WALL TO DOUBLE WALL DUCTWORK AT POINT SHOWN.
17. DOUBLE WALL R/A UP TO 40x7 RISER, RISER DUCT IS SINGLE WALL.
18. DOUBLE WALL R/A DUCT DN TO AHU-1 R/A PLENUM.
19. (3) COMBUSTION AIR DAMPERS, SEE DETAILS D AND E THIS DRAWING.
20. CENTER "NOZZLE" DIFFUSERS BETWEEN EXPOSED BEAMS.
21. CONNECT 8"x8" CRAWL SPACE E/A DUCT TO E/A AND RELIEF AIR PLENUM. PROVIDE BACKDRAFT DAMPER AT POINT OF CONNECTION.
22. FOR CONTINUATION OF S/A DUCTWORK SEE MAIN FLOOR PLAN, DRAWING H-3SB.
23. (2) REFRIGERANT SUCTION AND (2) REFRIGERANT LIQUID LINES UP FROM CRAWL SPACE THROUGH CHASE ON MAIN FLOOR LEVEL. SEE DRAWING H-3SB FOR CONTINUATION. ROUTE PIPING BELOW DUCTWORK AND CONNECT TO DX COIL PER DETAIL THIS DRAWING.
24. 7"ø S/A DUCT DOWN TO MAIN FLOOR. FOR CONTINUATION SEE DRAWING H-3SB.
25. 8"x8" E/A DUCT DOWN TO MAIN FLOOR. FOR CONTINUATION OF DUCTWORK SEE DRAWING H-3SB.
26. 2"HWS&R DOWN TO MECHANICAL ROOM. SEE DRAWING H-3SB FOR CONTINUATION. ROUTE PIPING ALIGNED VERTICALLY AS SHOWN.
27. 12" BOILER FLUE DOWN TO MECHANICAL ROOM. FOR CONTINUATION SEE DRAWING H-3SB. OFFSET FLUE (ANGLE GREATER THAN 45°) AND RUN HORIZONTALLY AT ROOF LINE. TERMINATE THROUGH ROOF BEHIND CUPOLA. SEE SECTION A DRAWING H-5SB FOR ADDITIONAL CLARIFICATION.
28. 1-1/2" FUEL OIL VENT DOWN TO FUEL OIL STORAGE TANKS. FOR CONTINUATION SEE DRAWING H-3SB.
29. 1-1/2" FLUE OIL VENT UP THROUGH ROOF. TERMINATE MINIMUM OF 18" ABOVE ROOF WITH MUSHROOM CAP.
30. 3/4"HWS&R DOWN TO MAIN FLOOR. FOR CONTINUATION SEE DRAWING H-3SB.

G:\Drawings\10215001\H-4SB.dwg Monday, January 15, 2001 8:07:11 am jpl

RICHARD A. CAMARA NO. 7179 STATE OF VERMONT PROFESSIONAL ENGINEER
1/15/01

No.	DATE	REVISION

DUNCAN • WISNIEWSKI ARCHITECTURE
255 SOUTH CHAMPLAIN STREET, BURLINGTON, VERMONT 05401 (802) 864-6583
Hallam Associates
60 Farrell Street, Suite 300
So. Burlington, Vermont 05403
(802) 658-4961

WILLISTON INFORMATION CENTER
189 SOUTHBOUND
STATE PROJECT # IM-BLDG (4)

LOFT HVAC PLAN

DRAWN: J.MARSHALL	PROJ.No: 10215
CHECKED: M.COOK	DATE: JAN 15, 2001

H-4sb

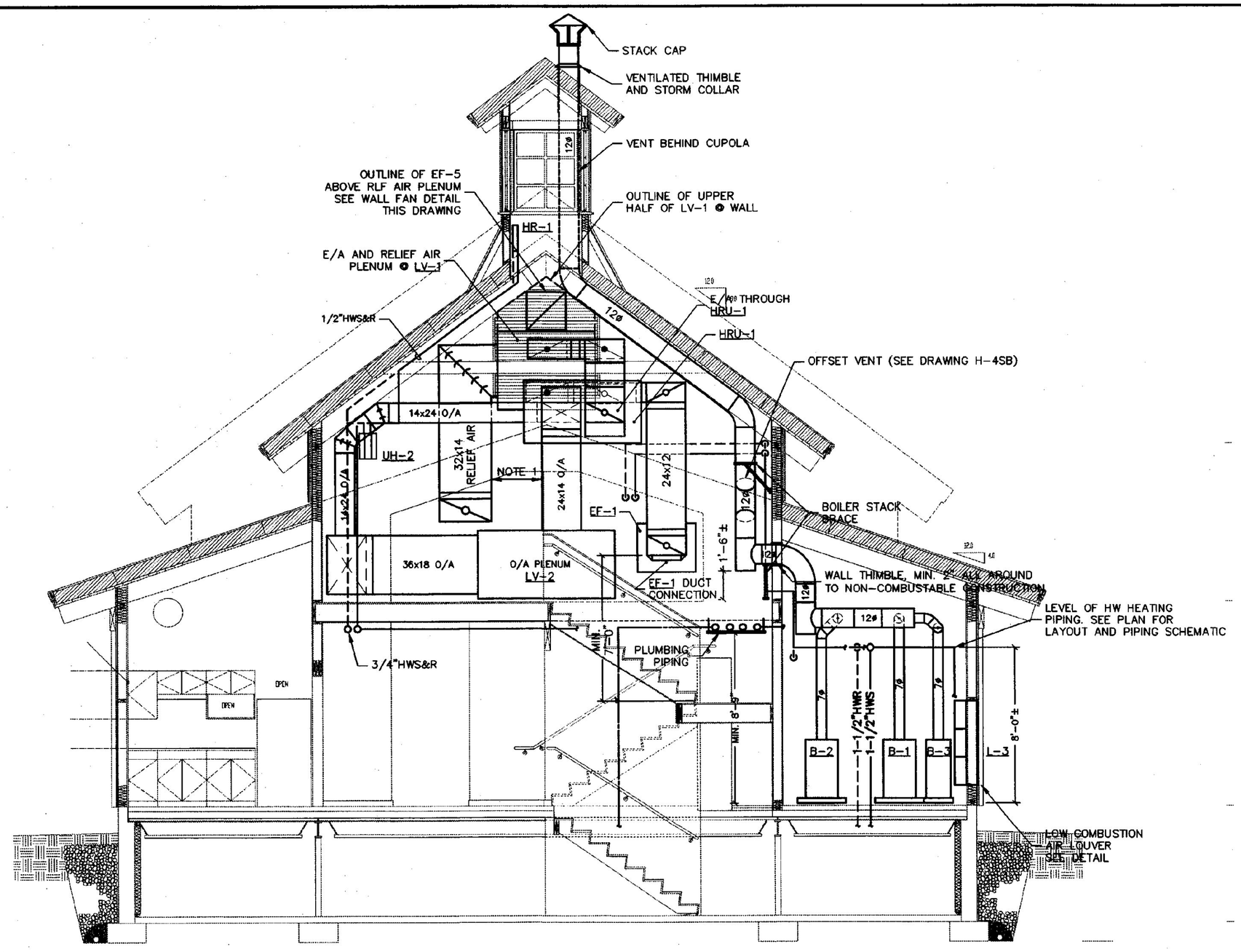

(A) MECHANICAL ROOM SECTION
H-5SB SCALE: 1/4"=1'-0"

NOTES:

1. MAINTAIN MIN. 3'-0" WIDE CLEAR SPACE AT TOP OF STAIR FOR ACCESS INTO LOFT MECHANICAL ROOM.

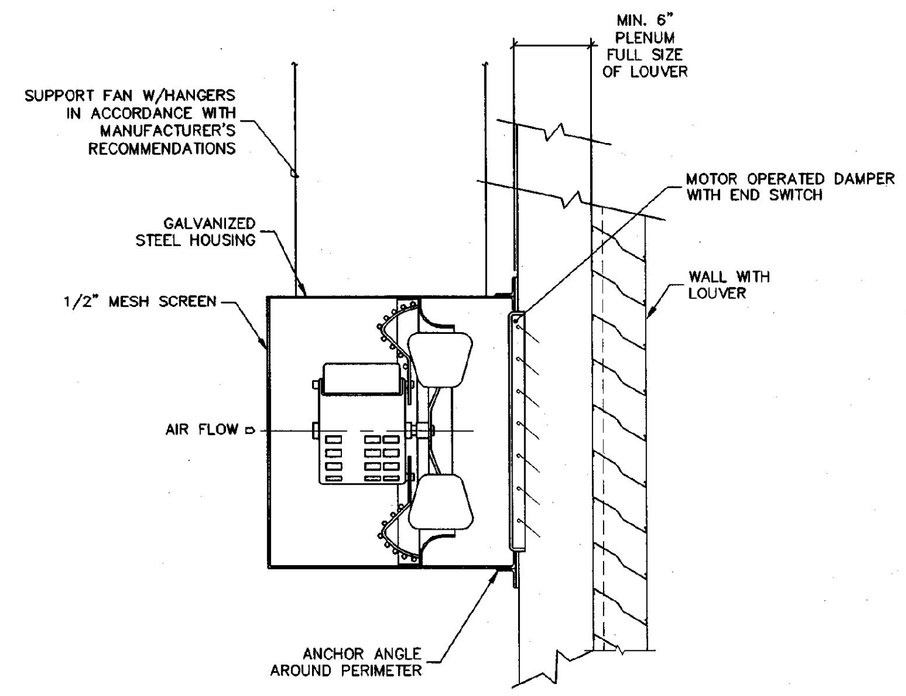

WALL FAN INSTALLATION DETAIL
SCALE: 1-1/2"=1'-0"

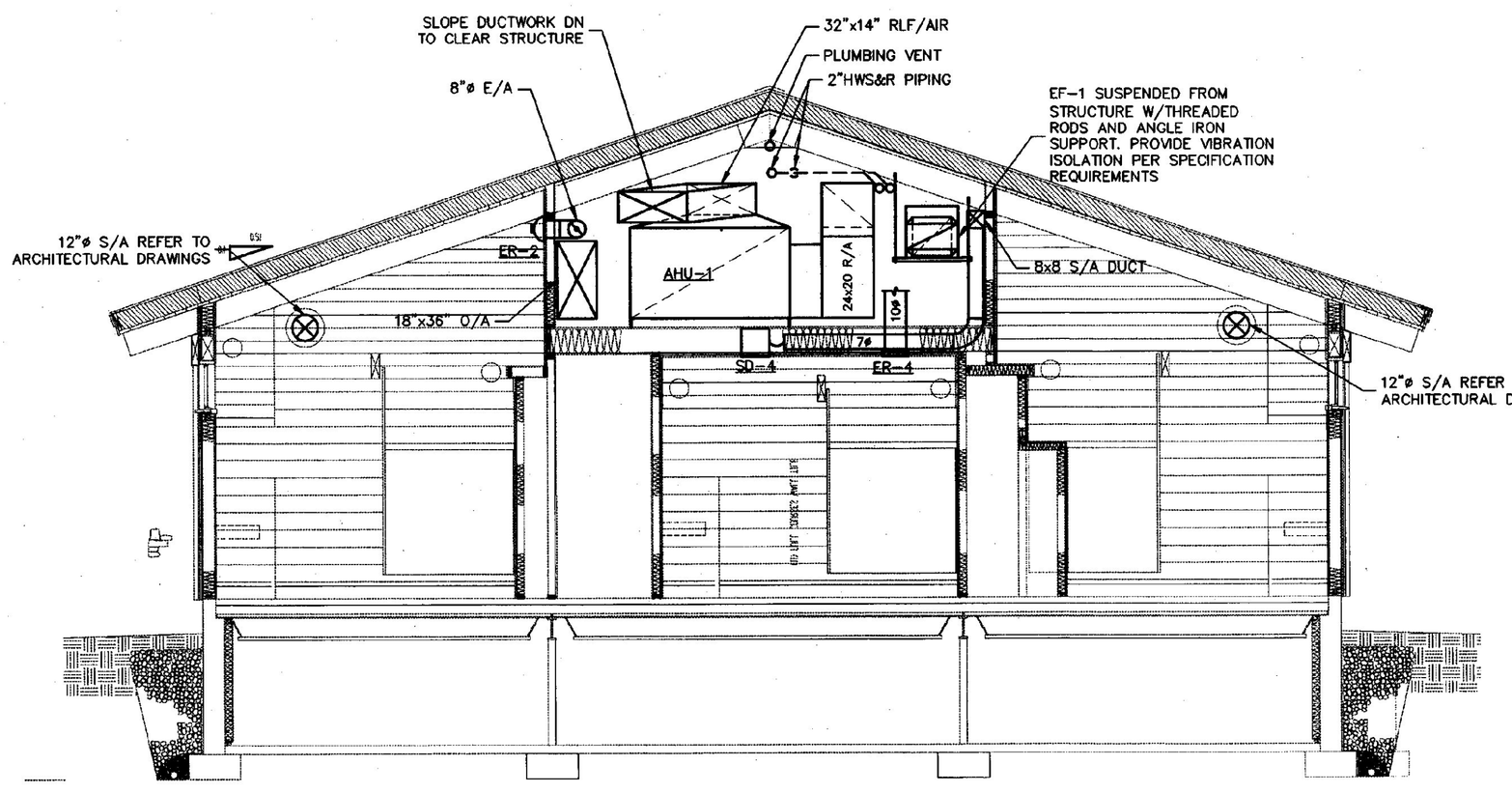

(B) MECHANICAL ROOM SECTION
H-5SB SCALE: 1/4"=1'-0"

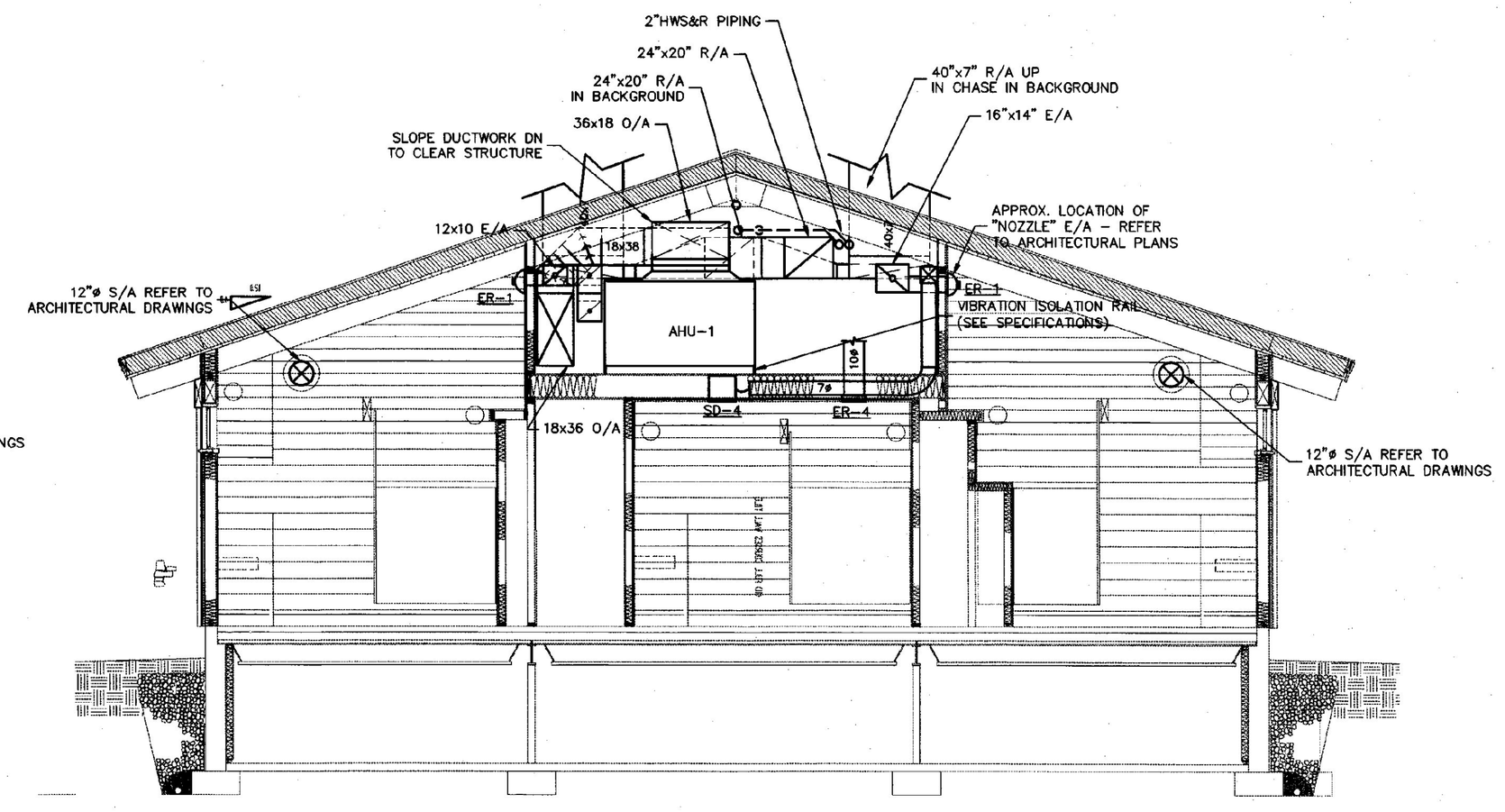

(C) MECHANICAL ROOM SECTION
H-5SB SCALE: 1/4"=1'-0"

G:\Drawings\10215001\H-5SB.dwg Monday, January 15, 2001 7:16:23 am jdl

STATE OF VERMONT
RICHARD MAMARA
NO. 7179
PROFESSIONAL ENGINEER
1/16/01

No.	DATE	REVISION

DUNCAN • WISNIEWSKI ARCHITECTURE
255 SOUTH CHAMPLAIN STREET, BURLINGTON, VERMONT 05401 (802) 864-6699

Hallam Associates
60 Parrell Street, Suite 300
So. Burlington, Vermont 05403
(802) 658-4891

WILLISTON INFORMATION CENTER
189 SOUTHBOUND
STATE PROJECT # IM-BLDG (4)

HVAC BUILDING SECTIONS

DRAWN: J.MARSHALL	PROJ.No: 10215
CHECKED: M.COOK	DATE: JAN 15, 2001

H-5sb

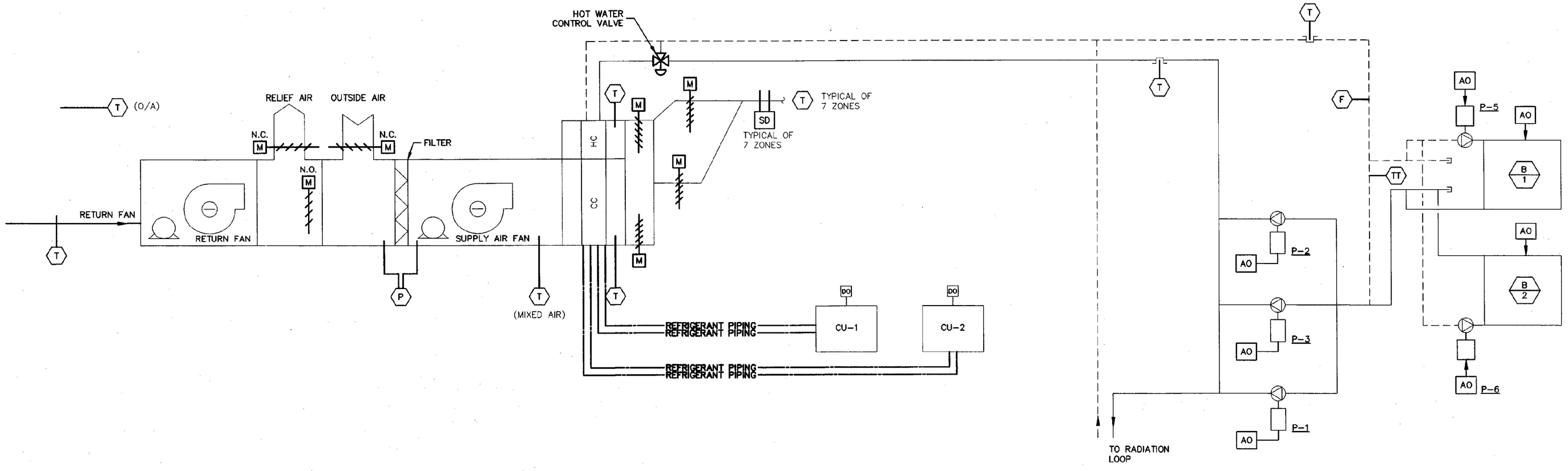

CONTROL SYMBOLS

- T — TEMPERATURE SENSOR
- T — THERMOMETER
- P — PRESSURE SENSOR
- P — PRESSURE SWITCH
- M — DAMPER W/ACTUATOR
- VALVE W/ACTUATOR (2-WAY)
- VALVE W/ ACTUATOR (3-WAY)
- F — FLOW SENSOR
- F — FLOW SWITCH
- SD — SMOKE DETECTOR (REFER TO DIV. 16)
- NC — NORMALLY CLOSED
- NO — NORMALLY OPEN
- AO — CONTROL SIGNAL TO DEVICE

MULTI-ZONE UNIT (MZ-1) CONTROL SCEMATIC

SCALE: NONE

GENERAL

1. Provide a dedicated DDC panel to control the multi-zone unit and associated fan (EF-1).

2. Provide a programmable 24 hour time clock with adjustable occupied/unoccupied settings.

3. Provide necessary sensors for global points (outside air temperature).

SYSTEM START UP

1. Supply air fan, return air fan, CU-1 and CU-2 are provided with three phase power via a phase converter. Phase converter does not operate continuously, only when there is a demand for three phase power. Prior to activation of HVAC equipment powered by phase converter, an authorization from phase converter control panel must be received at individual DDC panel(s) controlling HVAC equipment. ATC contractor shall furnish and install control relays and wiring between DDC controllers and phase converter control panel. Upon receipt of signal from DDC panel(s) to initiate HVAC control sequence, a signal shall be sent to phase converter to activate phase converter. When phase converter has been activated and power generation proven, a signal will be sent back to HVAC controller authorizing initiation of HVAC control sequence. Coordinate installation with Electrical Contractor for control tie-in points at phase converter control panel. Provide an alarm light at the DDC control panel; this light will be red and will be activated should phase converter fail to deliver three phase power on demand from equipment control sequence.

2. System shall start-up with signal from either hand or auto position of H-O-A switch on motor starter of supply air fan of multi-zone unit. Return air fan and exhaust fan (EF-1) shall follow through interlocks. Provide a time delay of thirty seconds between start-up of supply fan and return fan, and between return fan and exhaust fan. Control sequence shall commence with outside air damper (and relief air damper) in minimum position.

3. During occupied time period, supply, return and exhaust fans shall operate continuously.

4. During unoccupied time period, supply, return and exhaust fans will not operate, and outside air damper (and relief air damper) will be completely closed.

SPACE TEMPERATURE CONTROL

1. Each of the eight zones of the multi-zone unit shall be provided with a local temperature sensor, as located on the drawings.

2. During occupied time period, sensors, through the unit DDC panel, shall modulate the multi-zone dampers, mixing hot deck & cold deck air streams to maintain zone temperature set points.

3. During unoccupied time period, temperature sensors will be locked out of control system.

SUMMER OPERATION

1. Cooling system shall be activated when outside temperature exceeds 73F. Controls shall be provided to maintain cooling system on, once activated, for a minimum of one hour.

2. DDC system shall provide signals to the remote air-cooled condensing units to maintain cold deck supply air temperature set point. On call for cooling first activate the lead condensing unit, then activate lag condensing unit. Provide automatic lead lag changeover based on actual run time.

3. Cold deck temperature shall be reset from a minimum of 55F upward to maintain at least one zone in the full cooling position (no mixture with neutral deck). Cold deck temperature reset shall be limited by a high limit humidity sensor located in the return air duct with a set point of 50% relative humidity.

4. When outside air temperature is above return air temperature, outside air damper will remain in minimum outside air position, and neutral zone air temperature will be the mixed air temperature. When outside air is below return air temperature, DDC system will control economiser dampers to reset mixed air temperature downward until at least one zone is in the full bypass position (no mixture with cold deck).

INTERMEDIATE OPERATION (NO HEATING OR COOLING)

1. When outside air temperature is between 60F and 73F, neither heating nor cooling system will be in operation.

2. Return air temperature sensor shall operate economiser dampers from minimum outside air position to 100% outside air as required to maintain set point of 75F.

3. Zone dampers shall be full open to cold deck to minimize pressure drop through system.

WINTER OPERATION

1. Hot water circulation pumps shall be activated when outside air temperature is below 58F. During occupied hours, as determined by the time clock, both the multi-zone unit coil pump, and the perimeter zone pump will operate. During unoccupied hours, only the perimeter zone pump will operate. After a time delay, the boiler control circuit will be activated, provided flow switches in return water piping prove flow.

2. Hot water heating pumps P-1 and P-2 shall be provided with current sensors to monitor pump status, and shall alarm upon loss of pump flow by sounding an alarm and illuminating dedicated lights (red) in boiler room. Back-up pump P-3 shall be manually switched over by opening and closing appropriate valves. When valves have been re-positioned, a selector switch shall be positioned to indicate which pump (P-1 or P-2) pump P-3 is providing back-up. Pump P-3 shall assume operation of failed pump. Pump P-3 shall be provided with current sensor to monitor pump status and shall alarm upon failure as described for P-1 and P-2 above.

3. Boilers shall be provided with a master control panel, which will cycle boilers on in sequence to maintain supply water temperature set point and provide lead/lag control on a weekly basis and water temperature reset control for each boiler. Lead/lag control shall be capable of operating either manually or automatically and shall have on/auto/off switch for each stage to allow removal of boiler from sequence without re-wiring.

4. Supply water temperature set point shall be reset based on outside air temperature from 180F when outside temperature is below 0F. The hot water supply air temperature will be reset downward from 180F to 140F proportionally to an outside air temperature increase from 0F to 50F. Hot water supply air temperature will remain at 140F from outside air temperatures of 50F to 58F. Hot water reset shall be programmed into the boiler master control panel.

5. Provide a PID control and delay time to anticipate system temperature, preventing unnecessary cycling of boilers.

6. Control panel shall incorporate a sequencer to stage boilers on and off in response to water temperature sensor. Upon a signal from water temperature sensor lead boiler shall fire and associated circulator shall start. If lead boiler cannot meet system demand then lag boiler shall fire and its associated circulator shall start. Boilers and pumps shall sequence off in reverse order.

7. A digital display capable of manually stepping through all set points and system data shall be provided with LED's to indicate lead stage and boiler operating status.

8. Hot deck air temperature will be maintained at 120F to allow mixed air temperature to be a minimum of 100F.

9. Neutral deck will always be the mixture of minimum outside air with return air.

STATE OF VERMONT — RICHARD CAMARA NO. 7179 — PROFESSIONAL ENGINEER — 1/15/01

No.	DATE	REVISION

DUNCAN • WISNIEWSKI ARCHITECTURE
235 SOUTH CHAMPLAIN STREET, BURLINGTON, VERMONT 05401 (802) 864-0883

Hallam Associates
80 Parrell Street, Suite 300
So. Burlington, Vermont 05403
(802) 658-4891

WILLISTON INFORMATION CENTER
189 SOUTHBOUND
STATE PROJECT # IM-BLDG (4)

HVAC FLOW SCHEMATIC

DRAWN:	PROJ.No:
J.LAMOTHE	10215
CHECKED:	DATE:
M.COOK	JAN 15, 2001

H-6sb

G:\Drawings\10215001\H-6SB.dwg Monday, January 15, 2001 9:09:10 am jal

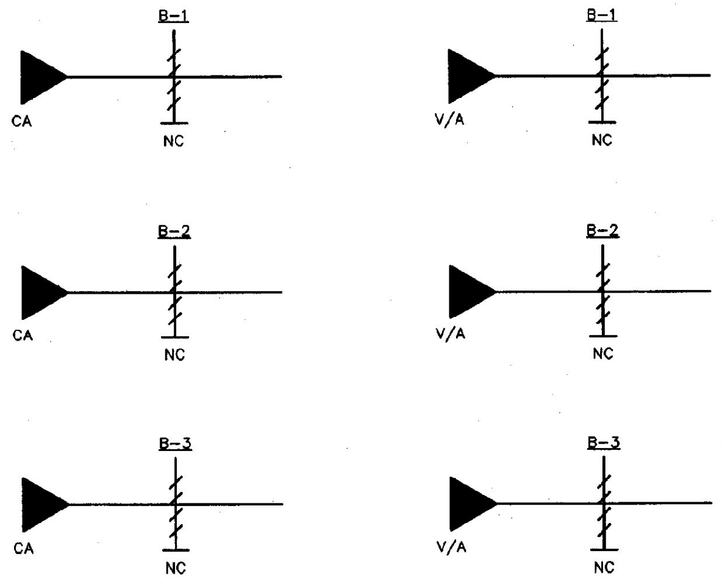

LOW COMBUSTION AIR DAMPERS @ BOILER ROOM

HIGH VENTILATION DAMPERS @ LOFT

BOILER COMBUSTION AIR CONTROL

Provide combustion air and associated ventilation motor operated dampers as indicated for each boiler. Provide controls and interlocks to open one combustion air and associated ventilation damper when its dedicated boiler operates and to close when boiler is not operating.

FUEL OIL ROOM VENTILATION

FUEL OIL ROOM VENTILATION

A wall mounted switch with pilot light shall be manually switched ON/OFF to start/stop EF-3. Make-up air will be provided by building infiltration. Control and wiring shall be provided by Electrical Contractor per Electrical Drawings.

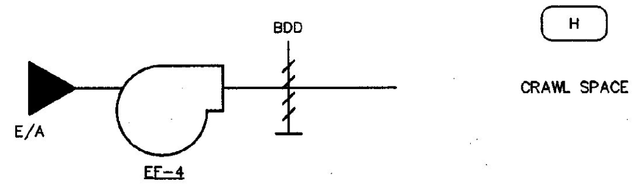

CRAWL SPACE HUMIDITY CONTROL (EF-4)

CRAWL SPACE VENTILATION CONTROL

A line voltage humidstat shall start EF-4 when set point is exceeded, when humidstat is satisfied fan shall stop. Humidistat shall be furnished by ATC Contractor and wired and installed by Electrical Contractor per Electrical Drawings.

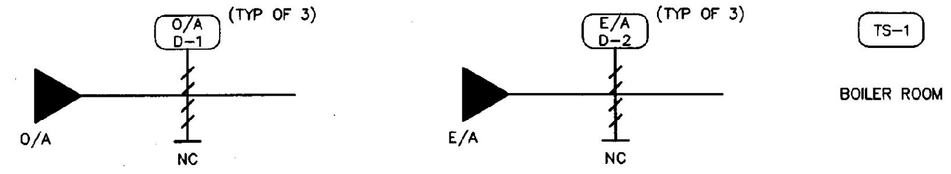

MECHANICAL ROOM GRAVITY VENTILATION

MECHANICAL ROOM VENTILATION (Gravity)

A low voltage electric thermostat (rev. acting) shall open the two position outside air dampers (3x) (low combustion air dampers) and two position exhaust air dampers (3x) (high ventilation dampers) when set point is exceeded. When thermostat is satisfied dampers shall close. Note: These are the same automatic dampers used for boiler combustion air control.

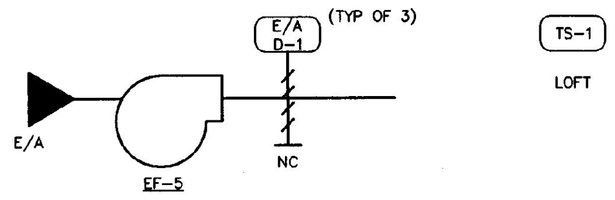

MECHANICAL ROOM VENTILATION

LOFT VENTILATION (Mechanical)

An electric line voltage thermostat (rev. acting) as indicated shall open EF-5 E/A damper when set point is exceeded, a damper limit switch shall start EF-5 when damper is open.

When space thermostat is satisfied damper shall close and fan shall stop. ATC shall provide line voltage thermostat to Electrical Contractor for installation per Electrical Drawings. Make-up air shall be provided by building infiltration.

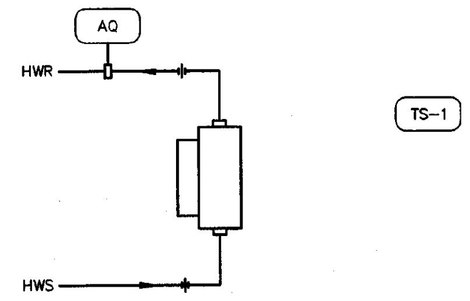

UNIT HEATER CONTROL

UNIT HEATER CONTROL

A wall mounted line voltage thermostat (as indicated) shall start the heater fan when room temperature is below heating set point. A strap-on line voltage aquastat shall prevent fan operation at low water temperatures (120°F) ATC shall furnish thermostat and aquastats to Electrical Contractor for wiring per electrical drawings.

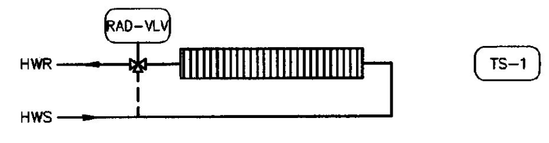

PANEL RADIATION CONTROL

RADIATION CONTROL

Provide a low voltage heating thermostat as indicated. When space temperature drops below set point 3-way HW valve shall allow flow through radiation, when space temperature reaches set point, 3-way HW valve shall by-pass radiation.

HW valve shall be "fail open" type. (flow through radiation)

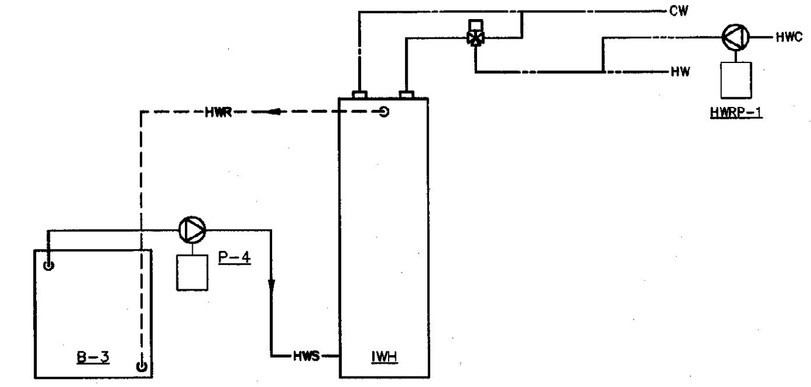

DOMESTIC HOT WATER HEATING CONTROL

DOMESTIC HW HTG. CONTROL

1. On a call for heating by tank temperature sensor (furnished by mfg.) boiler B-3 shall fire and P-4 shall start. When temperature sensor is satisfied boiler B-3 and P-4 shall stop. Tank temperature sensor shall be set for 120°F (adj) HW. Thermostatic mixing valve (by others) is used as an anti-scald valve for fixtures receiving 120°F. hot water.

2. Building hot water re-circulation pump HWRP-1 shall operate continuously in occupied time period and shall be off during unoccupied time period.

GENERAL NOTES:

ALL MOTORS, INCLUDING DAMPER OPERATORS SHALL BE PROVIDED WITH HAND-OFF-AUTO SWITCHES.

STATE OF VERMONT
RICHARD J. DAMORA
NO. 7179
PROFESSIONAL ENGINEER

No.	DATE	REVISION

DUNCAN • WISNIEWSKI ARCHITECTURE
255 SOUTH CHAMPLAIN STREET, BURLINGTON, VERMONT 05401 (802) 864-6693

Hallam Associates
60 Farrell Street, Suite 300
South Burlington, Vermont 05403
(802) 658-4081

WILLISTON INFORMATION CENTER
189 SOUTHBOUND
STATE PROJECT # IM-BLDG (4)

HVAC FLOW SCHEMATIC

DRAWN:	PROJ.No:
J.LAMOTHE	10215
CHECKED:	DATE:
M.COOK	JAN 15, 2001

H-7sb

G:\Drawings\10215001\H-7SB.dwg Monday, January 15, 2001 9:09:17 am jal

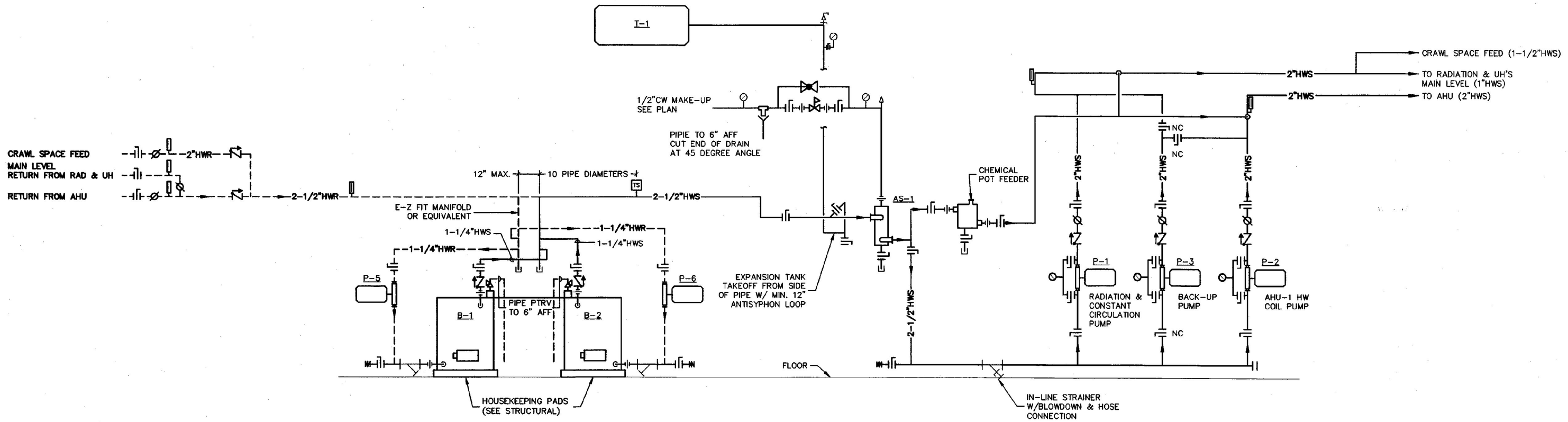

HEATING HOT WATER/BOILER PIPING SCHEMATIC

SCALE: NONE

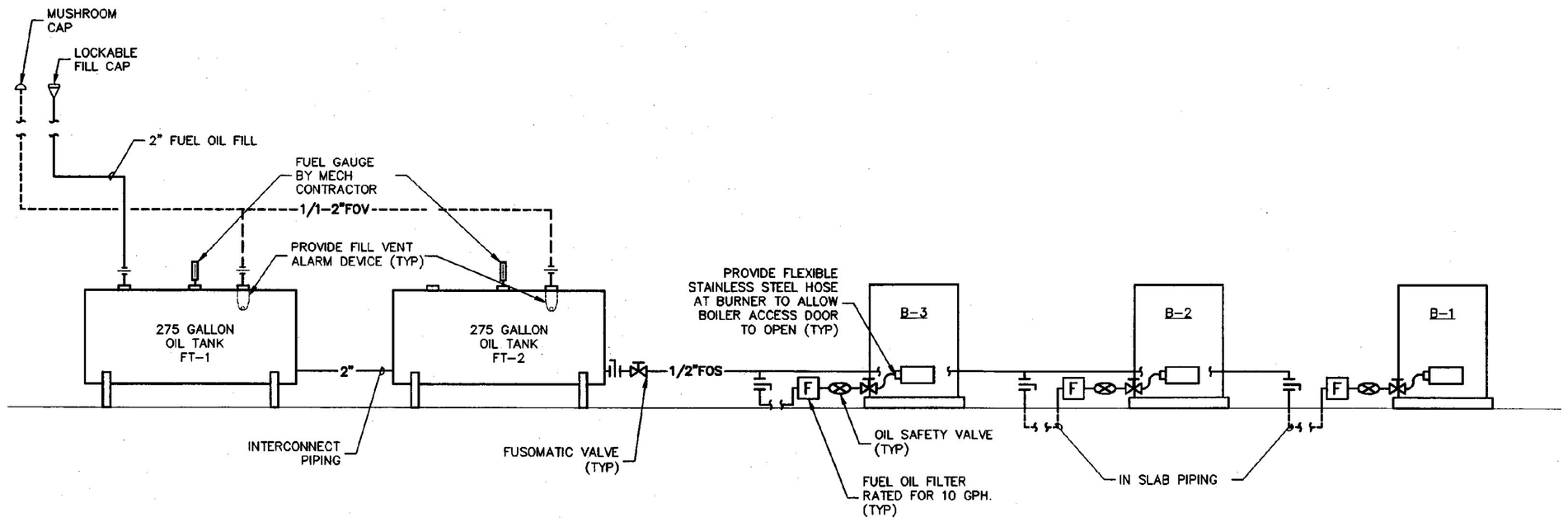

OIL PIPING SCHEMTAIC

SCALE: NONE

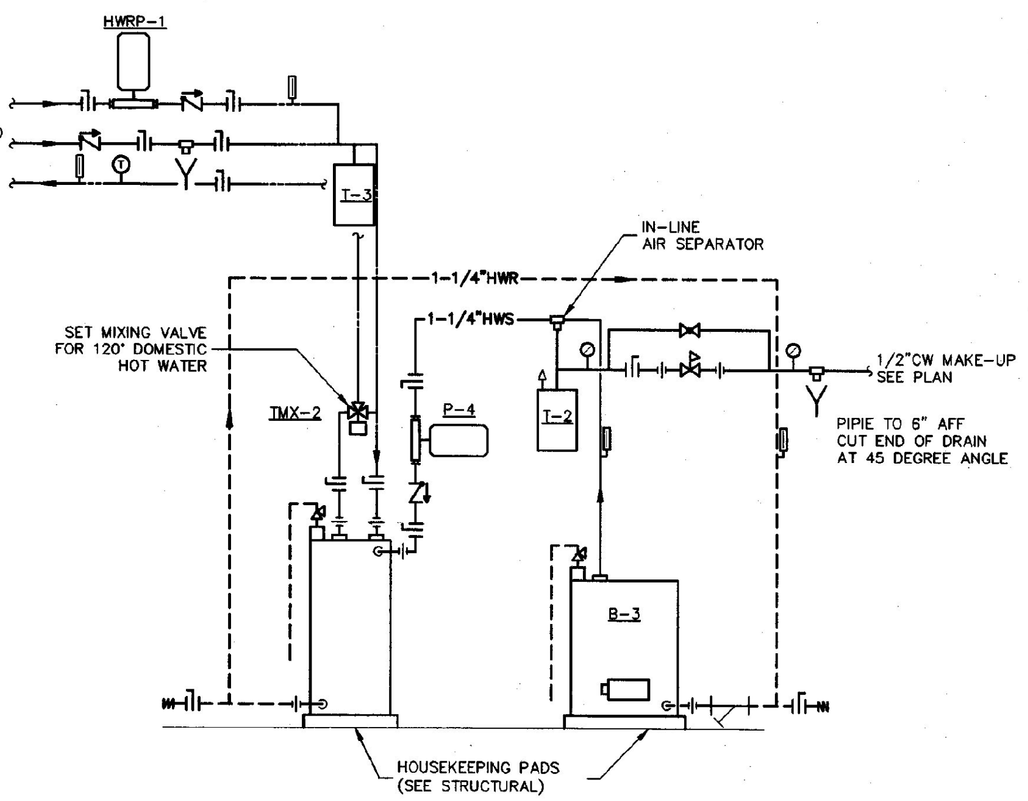

DOMESTIC HW BOILER PIPING SCHEMATIC

SCALE: NONE

NOTES:

1. SET BOILER (B-3) AQUASTAT FOR 180° WATER.
2. THREE WAY VALVES ARE SHOWN SCHEMATICALLY AND PIPING SHALL BE MANUFACTURER RECOMMENDATIONS.

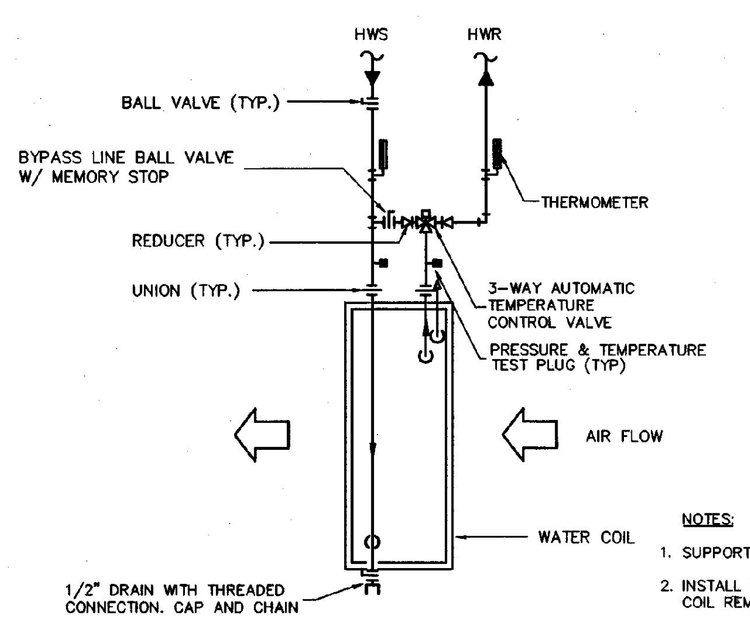

NOTES:

1. SUPPORT PIPING INDEPENDENT OF COIL.
2. INSTALL SO AS NOT TO INTERFERE WITH COIL REMOVAL OR AHU ACCESS DOORS.

AHU WATER COIL PIPING DETAIL

SCALE: NONE

G:\Drawings\10215001\H-8SB.dwg Monday, January 15, 2001 9:09:42 am jal

STATE OF VERMONT RICHARD DAMARA NO. 7179 PROFESSIONAL ENGINEER 1/15/01

No.	DATE	REVISION

DUNCAN • WISNIEWSKI ARCHITECTURE
255 SOUTH CHAMPLAIN STREET, BURLINGTON, VERMONT 05401 (802) 864-6693

Hallam Associates
60 Farrell Street, Suite 300
So. Burlington, Vermont 05403
(802) 658-4891

WILLISTON INFORMATION CENTER
189 SOUTHBOUND
STATE PROJECT # IM-BLDG (4)

HVAC FLOW SCHEMATIC

DRAWN: J.LAMOTHE	PROJ.No: 10215
CHECKED: M.COOK	DATE: JAN 15, 2001

H-8sb

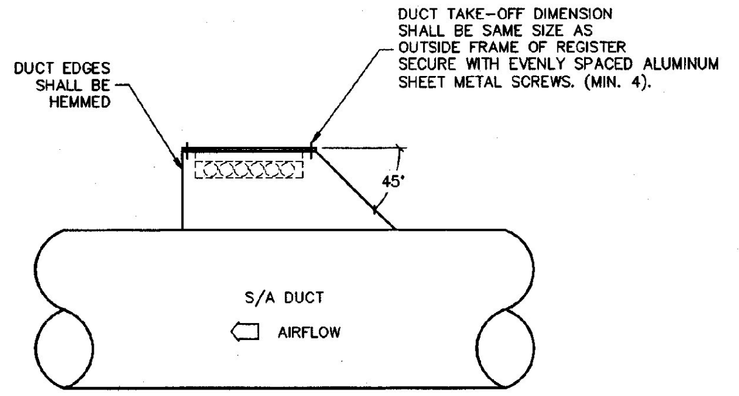

EXPOSED REGISTER DUCT TAKE-OFF DETAIL
SCALE: NONE

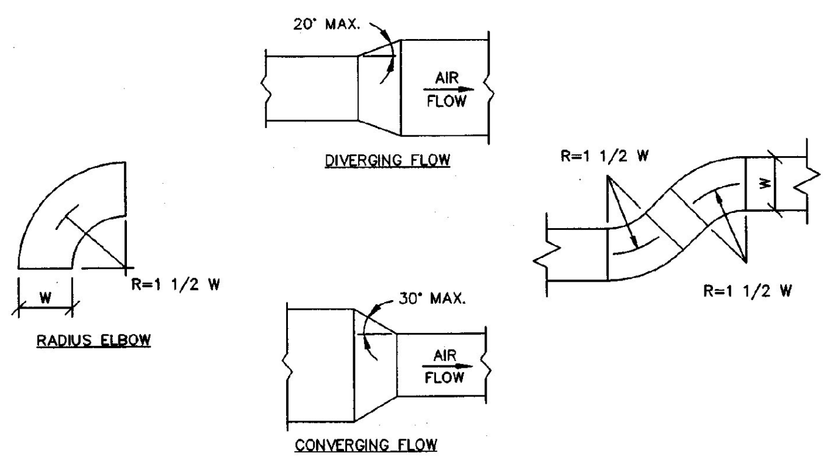

DUCT TRANSITIONS, OFFSETS, AND ELBOWS
SCALE: NONE

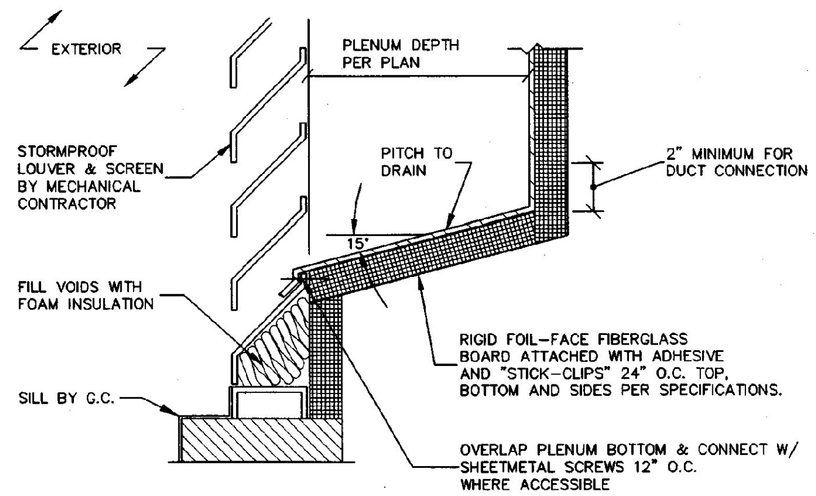

PLENUM AT LOUVER DETAIL
SCALE: NONE

NOTES:

SHEETMETAL CONSTRUCTION PER SMACNA.

SUPPORT PLENUM FROM FLOOR OR STRUCTURE ABOVE WITH GALVANIZED STEEL ANGLES AND CHANNELS, CROSS BREAK ALL PANELS FOR RIGIDITY.

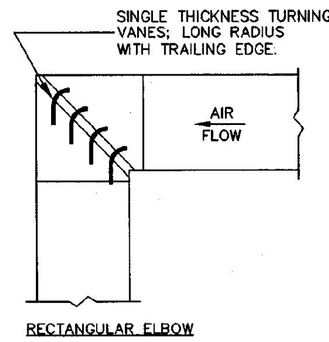

TURNING VANES FOR SQUARE ELBOW
SCALE: NONE

NOTES:
1. LOCKING LUGS INTEGRAL WITH VANE.
2. MAXIMUM UNSUPPORTED VANE LENGTH 48".
3. FRAMES-BOLTED OR RIVETED TO ELBOW.
4. VANES AND FRAMES – SAME GAUGE AS ELBOW.
5. TO BE USED ONLY WHERE SPECIFICALLY SHOWN ON THESE DRAWINGS.

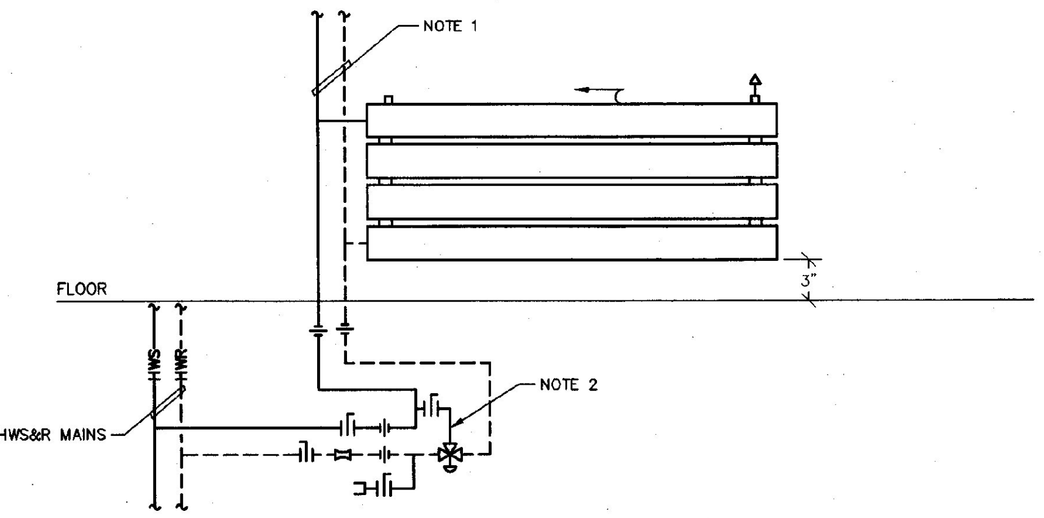

HEATING RADIATOR DETAIL
SCALE: NONE

NOTES:

1. REFER TO PLANS TO DETERMINE WHETHER PIPING FEEDS UP OR DOWN. WHERE PIPING FEEDS DOWN, PROVIDE VALVES IN CEILING SPACE ABOVE.
2. PROVIDE 3-WAY VALVE WHERE INDICATED ON PLANS.
3. DESIGN INTENT FOR THIS PROJECT IS TO INSTALL ALL VALVES AND FITTINGS IN CRAWL SPACE.
4. NOTE THAT 3-WAY VALVE MAY SERVE MORE THAN ONE RADIATION SECTION. REFER TO PLANS-ADJUST DETAIL ACCORDINGLY SO THAT EACH SECTION OF RADIATION IN INDIVIDUALLY ISOLATED AND BALANCED AND DRAINABLE.

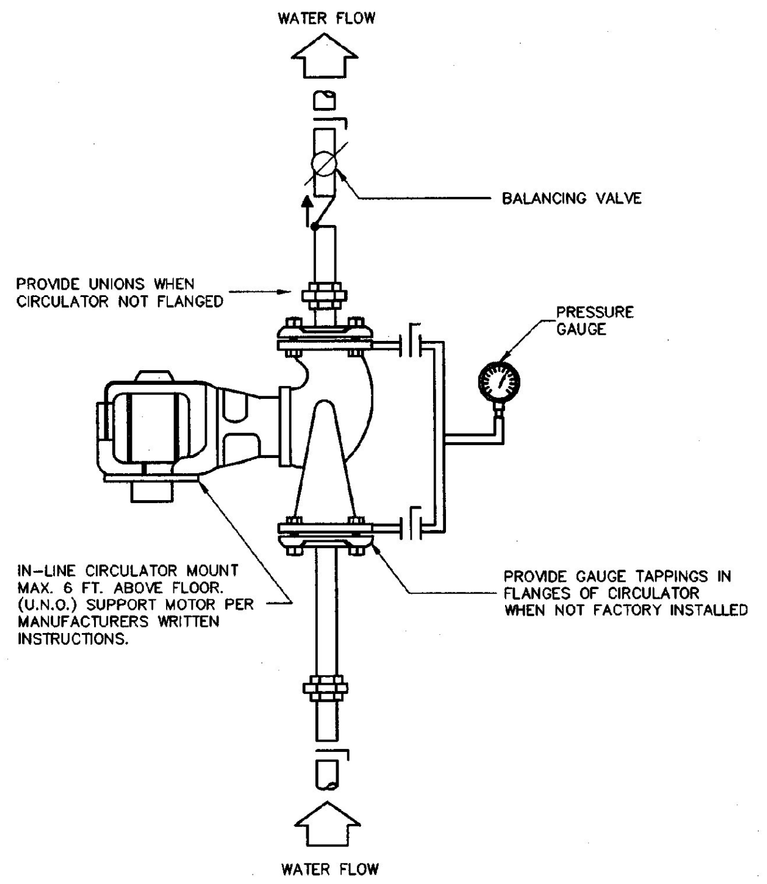

IN - LINE CIRCULATOR PIPING DETAIL
SCALE: NONE

NOTES:

1. REFER TO PIPING SCHEMATICS FOR ADDITIONAL VALVES AND FITTINGS.

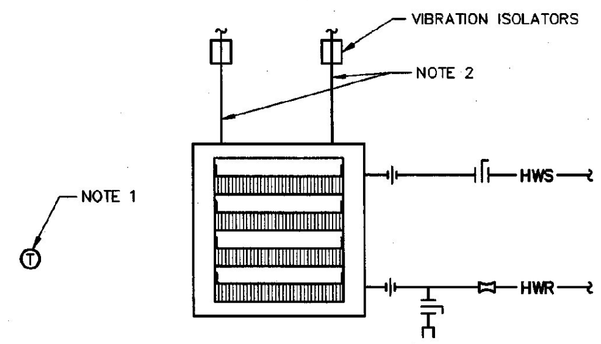

HOT WATER UNIT HEATER PIPING DETAIL
SCALE: NONE

NOTES:

1. COORDINATE THERMOSTAT LOCATION WITH PLANS. IF PLANS DO NOT SHOW A THERMOSTAT, MOUNT THERMOSTAT ON UNIT.
2. PROVIDE 3/8" HANGERS. MOUNT UNIT TIGHT TO BOTTOM OF FLOOR JOISTES.

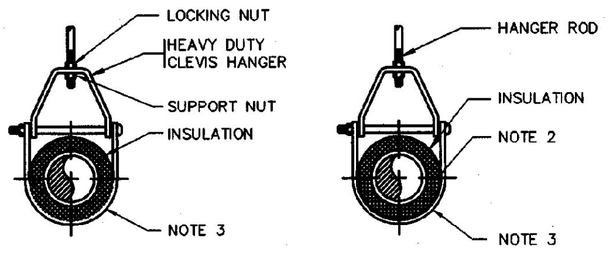

CLEVIS HANGER
(TYPICAL OF ALL PIPING LESS THAN 4")

ADJ. CLEVIS HANGER
(TYPICAL COLD WATER PIPING, UP TO 100F, 4"ø & LARGER)

PIPE HANGER DETAILS
SCALE: NONE

NOTES:

1. COORDINATE THESE DETAILS WITH REQUIREMENTS OF SPECIFICATIONS.
2. PROVIDE CALCIUM SILICATE INSULATION INSERT UNDER INSULATION. SHIELD LENGTH: 3x PIPE ø. EXPAND PIPING IMSULATION VAPOR BARRIER.
3. 16 GA. ZINC COATED SHEET STEEL SADDLE AT LEAST 12" LONG W/ BANDS.

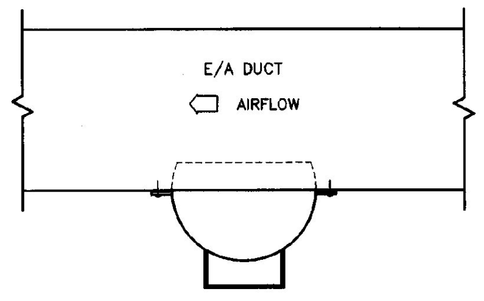

BOTTOM OF DUCT TAKE-OFF

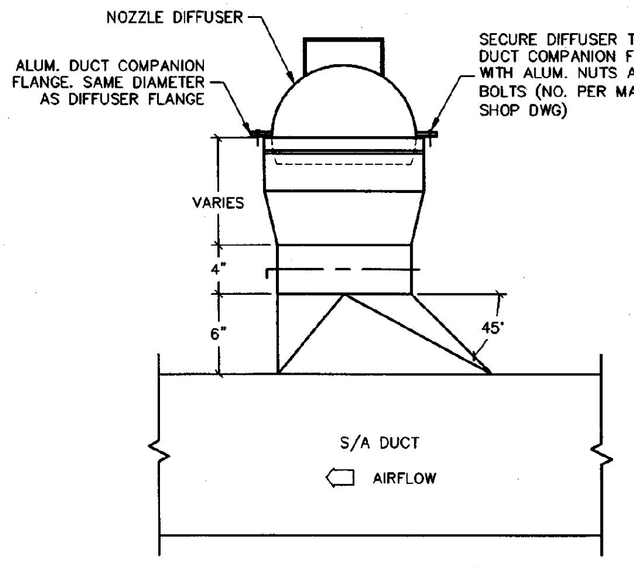

EXPOSED DETAIL

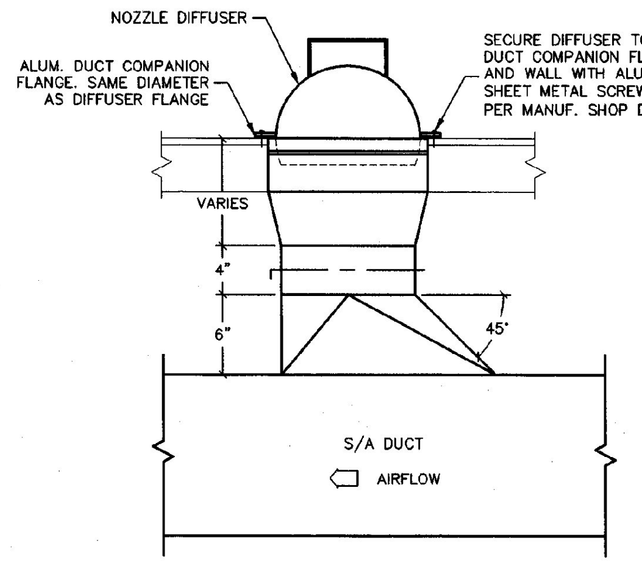

SURFACE MOUNTED DETAIL

"NOZZLE" TYPE SUPPLY/RETURN/EXHAUST CONNECTION DETAIL
SCALE: NONE

G:\Drawings\10215001\H-9SB.dwg Monday, January 15, 2001 9:10:02 am jal

STATE OF VERMONT
RICHARD A. CAMARA
NO. 7179
PROFESSIONAL ENGINEER
1/15/01

No.	DATE	REVISION

DUNCAN • WISNIEWSKI ARCHITECTURE
255 SOUTH CHAMPLAIN STREET, BURLINGTON, VERMONT 05401 (802) 864-6663

Hallam Associates
60 Farrell Street, Suite 300
So. Burlington, Vermont 05403
(802) 658-4881

WILLISTON INFORMATION CENTER
189 SOUTHBOUND
STATE PROJECT # IM-BLDG (4)

HVAC DETAILS

DRAWN:	PROJ.No:
J.LAMOTHE	10215
CHECKED:	DATE:
M.COOK	JAN 15, 2001

H-9sb

DOMESTIC CW STORAGE TANK AND PRESSURE BOOSTER PUMP CONTROL

GENERAL

Booster pump package manufacturer shall provide a DDC (microprocessor) based controller to control operation of domestic cold water storage tank water levels, booster pump package and system alarms. Controller shall be mounted in booster pump package control panel mounted to skid frame.

Provide a programmable time clock with adjustable occupied/unoccupied settings.

Controls contractor shall provide domestic cold water fill valve and actuator and shall be responsible for all field wiring between controlled devices, alarms and liquid level probe and booster pump manufacturer provided controller. Coordinate requirements with plumbing contractor and booster pump package vendor.

WATER TANK FILL CONTROL

Primary tank fill shall occur overnight at programmed time (Owner Directed) or whenever maximum daily draw down level is reached. Fill valve shall be commanded open by programmable time clock or level control until PRIMARY FILL – OFF level as sensed by liquid level probe has been reached at which time fill valve shall be closed.

At any time between 9AM and 7PM during day if BACKUP FILL – ON level position as sensed by liquid level probe, fill valve shall open and add water to tank until BACKUP FILL – OFF level position is reached and fill valve shall close.

At 4 AM (adj) programmable time clock shall command open tank fill valve to top off fill level of tank to PRIMARY FILL – OFF level. Tank fill valve shall close when PRIMARY FILL – OFF level has been reached.

WATER TANK ALARMS

When High Water level as sensed by liquid level probe is reached, an audible alarm shall sound at control panel at booster pump station and a red indicating light shall illuminate. Alarm shall be manually reset and panel shall be provided with an audible alarm silence switch.

When Low Water level as sensed by liquid level probe is reached, an audible alarm shall sound at control panel at booster pump station and a yellow indicating light shall illuminate. Low water level shall automatically reset when condition is corrected. (i.e. BACK-UP FILL resolves condition) Alarm shall be manually reset and panel shall be provided with an audible alarm silence switch in the event condition remains.

When Pump Shutdown level is reached as sensed by liquid level probe, booster pump operation shall be terminated and an audible alarm shall sound at control panel at booster pump station and a red light shall illuminate. Alarm shall be manually reset and panel shall be provided with an audible alarm silence switch.

BOOSTER PUMP OPERATION AND ALARMS

The booster pump system shall be designed to operate intermittently and incorporate 3– stage sequencing. Pump No. 1 shall handle low demand requirements (Stage 1) when demand exceeds Pump No. 1 capacity, Pump No. 1 is de–activated and Pump No. 2 activates (Stage 2) until its capacity is exceeded at which point both pumps are allowed to operate (Stage 3) to meet demand. With decreasing demand pumps are sequenced off in reverse order.

With the pump selector switches on "auto", pump No. 1 shall operate when system pressure as sensed by pressure switch in discharge header drops to pre–selected set point. Pump No. 1 shall continue to run until the pressure switch deactivates (opens), the pump minimum run timer elapses and the lag pump(s) if required to meet demand have sequenced off. Sequential control of booster pumps will be by means of current sensing devices which is directly related to pump capacity. The current sensing devices (relays) are pre–set to start and stop the pumping units in the required sequence and flow value.

Both pumps shall be capable of being operated manually by means of HOA selector switches.

Control panel shall be furnished with green pump running lights indicating which pumps are operating at any time.

Control panel shall be furnished with No–Flow Shutdown feature. An aquastat mounted on suction header monitors water temperature and stops pumps when pump seal water temperature exceeds 80 deg. F. A pressure switch mounted in the control panel and piped to the discharge header will re–start pumps when system pressure drops to the minimum allowed pressure (cut–in)

Control panel shall be provided with elapsed time meters to monitor hours of operation of each pump and motor.

Provide High System Pressure, Pump Shutdown with manual reset and pilot light. A high system pressure switch monitors booster system outlet pressure and stops the pumps if discharge pressure exceeds pre–set value. Alarm shall override pump operation in manual mode.

Provide low suction pressure switch and pilot light with automatic reset. In the event suction pressure drops to a pre–set level, the low suction pressure switch shall prohibit pump operation. A red light shall illuminate on the control panel and alarm shall sound. An audible alarm silence switch shall be provided.

Control panel shall be provided with a lamp test feature to allow maintenance staff to monitor condition of panel illuminating lights.

PLUMBING FIXTURE AND EQUIPMENT SCHEDULE

No	MAKE & MODEL	MOUNTING	CONNECTIONS HW	CW	TW	W	V	ACCESSORIES	REMARKS
WC–1	AM. STD. AFWALL #2258.125 (BACK SPUD)	WALL	–	1	–	3	2	FLUSH VALVE: SLOAN ROYAL OPTIMA 152–1.5 ES–S W/EL–1500–L, CARRIER: ZURN 1203 OR EQUAL, SEAT CHURCH #9500C	COORDINATE INSTALLATION OF ELECTRONIC SENSORS & REQUIRED TRANSFORMERS W/ELEC. CONTRACTOR
WC–1A	AM. STD. AFWALL #2258.125 (BACK SPUD)	WALL	–	1	–	3	2	FLUSH VALVE: SLOAN ROYAL OPTIMA 152–1.5 ES–S W/EL–1500–L, CARRIER: ZURN 1203 OR EQUAL, SEAT CHURCH #9500C	MOUNT 17" TO 19" AFF COORDINATE INSTALLATION OF ELECTRONIC SENSORS & REQUIRED TRANSFORMERS W/ELEC. CONTRACTOR
UR–1	AM. STD WASHBROOK #6506.011 (BACK SPUD)	WALL		3/4	–	2	1 1/2	FLUSH VALVE: SLOAN ROYAL OPTIMA 195–1 ES–S W/EL–1500–L CARRIER: ZURN 1222 OR EQUAL	MOUNT RIM 24" AFF COORDINATE INSTALLATION OF ELECTRONIC SENSORS & REQUIRED TRANSFORMERS W/ELEC. CONTRACTOR
UR–1A	AM. STANDARD WASHBROOK #6506.011 (BACK SPUD)	WALL		3/4	–	2	1 1/2	FLUSH VALVE: SLOAN ROYAL OPTIMA 195–1 ES–S W/EL–1500–L CARRIER: ZURN 1222 OR EQUAL	MOUNT RIM 17" AFF COORDINATE INSTALLATION OF ELECTRONIC SENSORS & REQUIRED TRANSFORMERS W/ELEC. CONTRACTOR
S–1	BRADLEY EXPRESS SS–3AZ	WALL	–	–	1/2"	1 1/2	1 1/2	FAUCETS: INTERGRAL WITH FIXTURE. PROVIDE TRANSFORMER & SOLENOID VALVES, & STANDARD EQUIPMENT *	* DO NOT PROVIDE MIXING VALVE, COLOR BY ARCHITECT
S–2	BRADLEY EXPRESS SS–1	WALL/W PEDESTAL APRON	–	–	1/2"	1 1/2	1 1/2	FAUCETS: INTERGRAL WITH FIXTURE, W/TRAP COVER, TRANSFORMER, SOLENOID VALVE & STANDARD EQUIPMENT * PROVIDE CARRIER: ZURN 1231	* DO NOT PROVIDE MIXING VALVE, COLOR BY ARCHITECT
JS–1	ELKAY DLR–3122–12	COUNTER	1/2	1/2	–	1 1/2	1 1/2	DRAIN: ELKAY LK–99, FAUCET LK–2423	
KS–1	ELKAY CELEBRITY #DCR–2522–10 S.S. SINK	COUNTER	1/2	1/2	–	1 1/2	1 1/2	FAUCET: ELKAY LK–2443, DRAIN: ELKAY LK–99	
DF–1	ELKAY EDFP–214–C	WALL	–	1/2	–	1 1/2	1 1/2	SEE ARCH. ELEVATIONS FOR MOUNTING HEIGHT	
DF–2	ELKAY EDFP–214–C	WALL	–	1/2	–	1 1/2	1 1/2	SEE ARCH. ELEVATIONS FOR MOUNTING HEIGHT	
FD–1	ZURN ZN–415–VP–Y	FLOOR	–	–	–	3"	1 1/2	PROVIDE VANDAL PROOF SQUARE (TYPE S) TOP AND SEDIMENT BUCKET	
FD–2	ZURN ZN–415–Y	FLOOR	–	–	–	2"	–	PROVIDE SQUARE TOP (TYP 5) AND SEDIMENT BUCKET	
HB–1	WOODFORD MODEL B65 WALL HYDRANT	WALL (EXTERIOR)	–	3/4	–	–	–	90° INLET ELBOW W/UNION NUT, POLISHED CHROME BOX AUTOMATIC DRAINING, FREEZELESS, VACUUM BREAKER – BFP.	
HB–2	WOODFORD MODEL B75 WALL HYDRANT	WALL (INTERIOR)	–	3/4	–	–	–	POLISHED CHROME BOX & 90° INLET ELBOW W/UNION NUT VACUUM BREAKER – BFP.	
MS–1	FIAT #830–AA SERVICE SINK FAUCET	WALL	1/2	1/2	–	–	–	PROVIDE FIAT #889–CC MOP HANGER, MODEL 832–AA 30" FLEX HOSE & BRACKET, COORDINATE WITH ARCH FOR MOUNTING LOCATION	BASE IS FORMED W/FLR.
TMX–1	POWERS B–D–U–S–1 MASTER SUPPLY FIXTURE, W/420 VALVE	WALL	1/2	1/2	–	–	–	THERMOSTATIC WATER MIXING VALVE, 1/2" INLETS, 1/2" OUTLET, ROUGH CHROME FINISH, EXPOSED CABINET. PROVIDE DIAL THERMOMETER IN OUTLET	MOUNT BOT. 60" AFF
HB–3	WOODFORD MODEL 24 P–3/4	EXPOSED WALL	–	3/4	–	–	–	VACUUM BREAKER–BACKFLOW PREVENTER, BRASS FINISH	–
HWRP–1	ARMSTRONG ASTRO SERIES MODEL 50B	IN–LINE	3/4	–	–	–	–	2.5 GPM @ 18 FT. HD., 1800 RPM	ELECTRIC: 120V – 1PH, 110W
RCH–1	ELKAY ER–10 (2 STATIONS)	FLOOR	1/2	1/2	–	–	–	9.6 G.P.H, 1/4 HP, 120V–1PH	MOUNT ON CRAWL SPACE FLOOR BELOW FOUNTAINS
FD–3	ZURN Z–610	FLOOR	–	–	–	3"	1–1/2"	SUSPENDED SEDIMENT BUCKET, SQUARE CAST IRON GATE	TYPE B – SEE SPECS
SP–1	LITTLE GIANT MODEL 8E–CIA–RFS	SUBMERSIBLE	–	–	–	4"INLET 2"OUTLET	3"	15' POWER CORD, 3.5 GPM @12 FT HD, 120V–1PH, BASIN:	–
HP–1,2	JOHN WOOD COMPANY TYPE I SERIES NO. JBPR–22–014	FLOOR	–	–	–	–	–	317 GALLON CAPACITY, W/ SEISMIC MOUNTING CLIPS, FDA APPROVED POTABLE MATERIAL.	MOUNTED IN VERTICAL.
TMX–2	POWERS HYDROGUARD SERIES 430, MODEL 431	PIPING	3/4	3/4	–	–	–	ROUGH FINISH	MOUNT @ INDIRECT WATER HEATER
SI–1	ZURN Z–1181 SOLIDS INTERCEPTOR	FLOOR SUPPORT	–	–	–	2"	1–1/2"	30 GPM FLOW RATE	PROVIDE UNISTRUT FLOOR SUPPORT

WATER HEATER SCHEDULE

No	MAKE & MODEL	1ST HR GALS	BOILER	ACCESSORIES
IFWC–1	WEIL–McLAIN INDIRECT FIRED WATER HEATER MODEL PLUS 60	171	WEIL–McLAIN #B–WGO–2, SEE MECH. DRAWINGS	

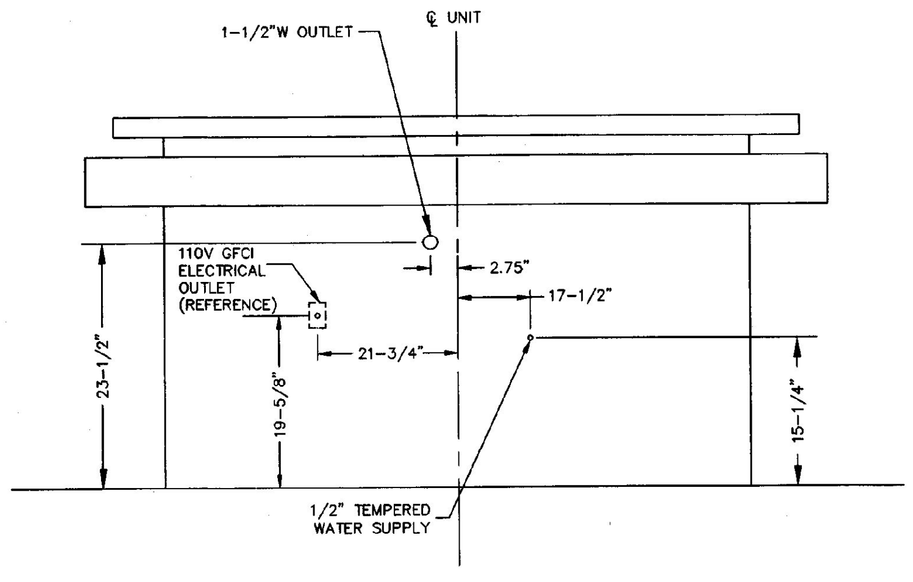

TYPICAL 3 BAY LAVATORY PLUMBING CONNECTION DETAIL

SCALE: NONE

NOTES:

1. COORDINATE ROUGH–IN WITH MANUFACTURER'S INSTALLATION INSTRUCTIONS.
2. DESIGN INTENT IS TO ROUGH–IN TEMPERED WATER THROUGH FLOOR TIGHT TO INSIDE FACE OF EXTERIOR WALL. TEMPERED WATER RISER TO BE CONCEALED BY SINK APRON ASSEMBLY.

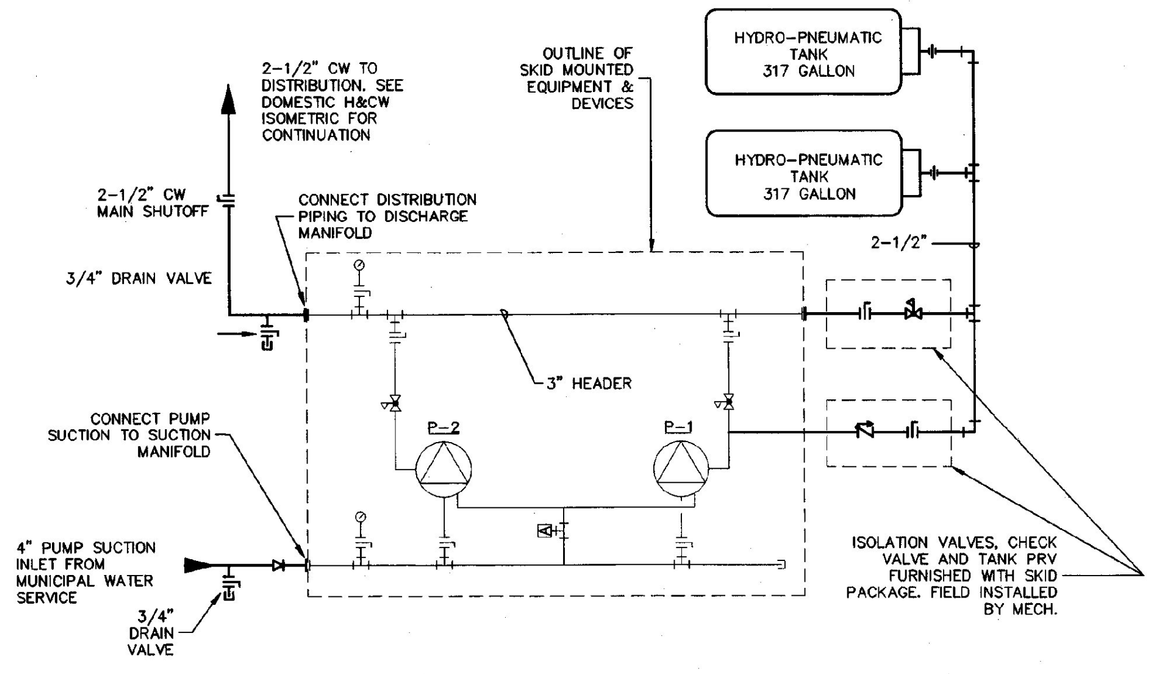

DOMESTIC CW BOOSTER PUMP PIPING SCHEMATIC

SCALE: NONE

DESIGN BASIS:

DOMESTIC WATER BOOSTER PACKAGE (DWBP–1): ARMSTRONG HYDROPAK MODEL #6524 (DUPLEX UNEQUAL FLOW) TOTAL PUMPING CAPACITY 80 GPM; SYSTEM PRESSURE 55 PSI; SUCTION PRESS: 20 PSI (EST); PUMP 1: 30 GPM; PUMP 2: 50 GPM; ELECTRIC: PUMP 1: 2HP, 240V–1PH; PUMP 2: 3HP,240V–1PH. SEE SPECIFICATIONS FOR ADDITIONAL REQUIREMENTS.

G:\Drawings\10215001\P–1SB.dwg Monday, January 15, 2001 9:12:18 am jal

STATE OF VERMONT
RICHARD A. CAMARA
NO. 7179
PROFESSIONAL ENGINEER
1/15/01

No.	DATE	REVISION

DUNCAN • WISNIEWSKI ARCHITECTURE
255 SOUTH CHAMPLAIN STREET, BURLINGTON, VERMONT 05401 (802) 864–6693
Hallam Associates
60 Farrell Street, Suite 300
So. Burlington, Vermont 05403
(802) 862–4821

WILLISTON INFORMATION CENTER
189 SOUTHBOUND
STATE PROJECT # IM–BLDG (4)

SCHEDULES AND DETAILS

DRAWN:	PROJ.No:
J.LAMOTHE	10215
CHECKED:	DATE:
M.COOK	JAN 15, 2001

P–1sb

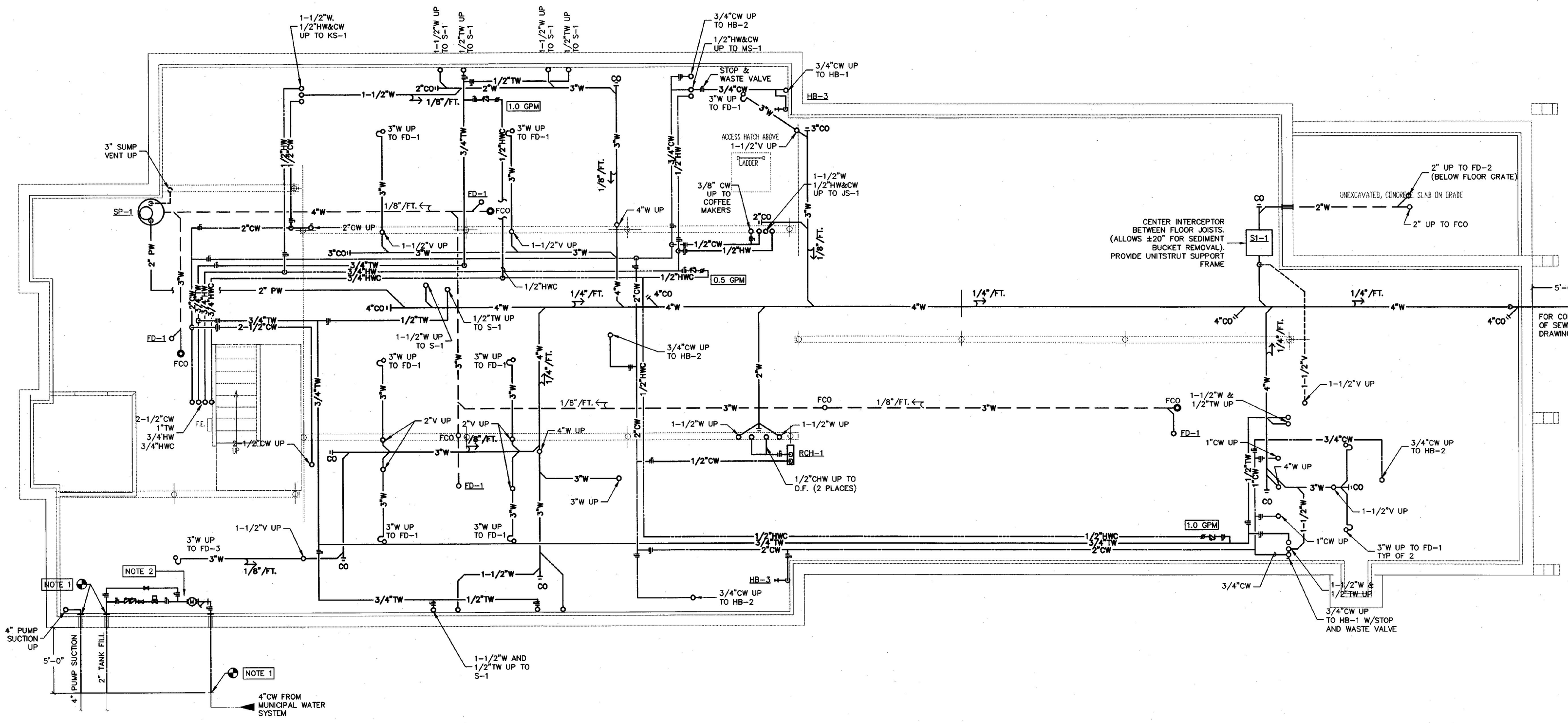

CRAWL SPACE PLUMBING PLAN
SCALE: 1/4"=1'-0"

NOTES:

1. SEE CIVIL DRAWINGS FOR CONTINUATION OF WATER SERVICE, TANK FILL AND PUMP SUCTION.

2. REFER TO DOMESTIC CW ENTRANCE DIAGRAM ON P-5nb FOR FURTHER PIPING & VALVE REQUIREMENTS.

STATE OF VERMONT
RICHARD D. CAMARA
REG. NO. 7179
PROFESSIONAL ENGINEER
1/16/01

No.	DATE	REVISION

DUNCAN • WISNIEWSKI ARCHITECTURE
255 SOUTH CHAMPLAIN STREET, BURLINGTON, VERMONT 05401 (802) 864-6693

Hallam Associates
80 Farrell Street, Suite 300
So. Burlington, Vermont 05403
(802) 865-4081

WILLISTON INFORMATION CENTER
189 SOUTHBOUND
STATE PROJECT # IM-BLDG (4)

CRAWL SPACE PLUMBING PLAN

DRAWN:	PROJ.No:
J.LAMOTHE	10215
CHECKED:	DATE:
M.COOK	JAN 16, 2001

P-2sb

G:\Drawings\10215001\P-2SB.dwg Tuesday, January 16, 2001 2:50:11 pm jal

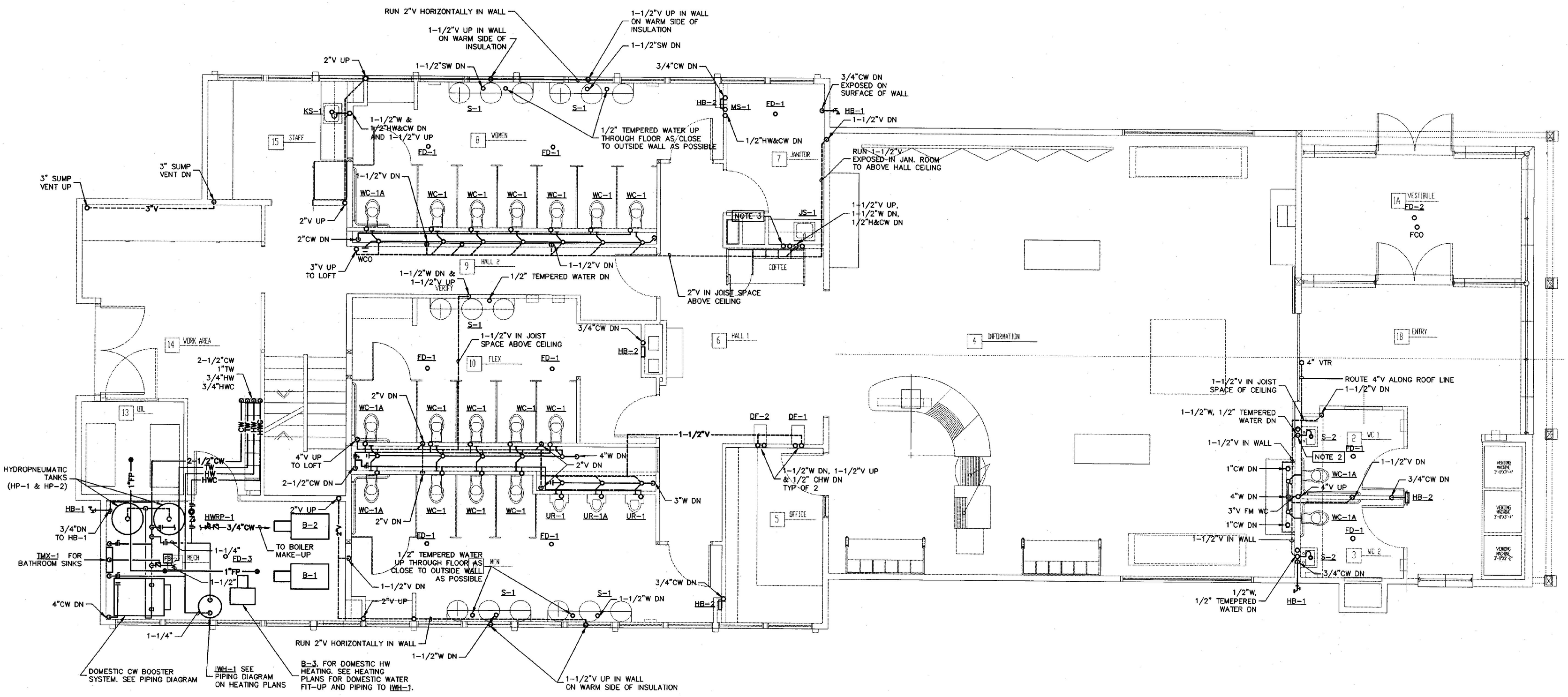

MAIN FLOOR PLUMBING PLAN

SCALE: 1/4"=1'-0"

NOTES:

1. MECHANICAL CONTRACTOR SHALL COORDINATE LOCATION OF FLOOR DRAINS WITH GENERAL CONTRACTOR AFTER WALLS AND FLOOR HAVE BEEN ROUGHED IN. INTENT IS TO CORE DRILL FLOOR DRAIN LOCATIONS PRIOR TO TILE LAYOUT. GROUT IN AFTER INSTALLATION, SEE ARCHITECTURAL DRAWINGS.
2. COORDINATE INSTALLATION OF SINK CARRIER WITH G.C. INTENT IS TO BORE A HOLE THROUGH COLUMN BEHIND SINK FOR INSTALLATION OF CARRIER ALIGNMENT TRUSS ROD.
3. FURNISH AND INSTALL 3/8" CW CONNECTION TO COFFEE MACHINE INCLUDING FINAL CONNECTION TO UNITS. PROVIDE WATTS NO. 9BD BACKFLOW PREVENTER AND BALL VALVE AT THIS LEVEL. CONCEAL PIPING AND DEVICES WITHIN CABINETRY, COORDINATE WITH G.C.

LIMITED AREA SPRINKLER SYSTEM NOTES

NOTES:

1. PROVIDE LIMITED AREA SPRINKLER FIRE SUPPRESSION SYSTEMS FOR THE BOILER ROOM, AND FUEL OIL STORAGE AS SHOWN ON PLANS. LIMITED AREA SPRINKLERS ARE TO BE DESIGNED AND INSTALLED ACCORDING TO THE STATE OF VERMONT, NFPA 13 AND BOCA 1987, ARTICLE 10, WITH 1988 SUPPLEMENT. PIPES SHALL BE SIZED BY HYDRAULIC CALCULATIONS. HYDRAULIC CALCULATIONS AND DRAWINGS ARE TO BE DONE BY A CERTIFIED NICET LEVEL III. DRAWINGS AND CALCULATIONS SHALL INCLUDE THE FOLLOWING:
   - A. LOCATIONS OF REMOTE AREA.
   - B. K-FACTORS.
   - C. DENSITY (LITER/SEC. PER SQ. METER) OR PER STATE REQUIREMENTS.
   - D. DESIGN AREA DISCHARGE.
   - E. WATER FLOW. PER STATE REQUIREMENTS.
   - F. PRESSURES.
   - G. AREA PER SPRINKLER.

   SPRINKLER LINE SIZING INDICATED ON THESE DRAWINGS ARE APPROXIMATE, ACTUAL LINE SIZING REQUIRED SHALL BE DETERMINED BY A CERTIFIED NICET LEVEL III.
2. SPRINKLER FOR BOILER ROOM AND FUEL OIL STORAGE ROOM SHALL BE A BRONZE EXPOSED PENDANT TYPE RATED FOR 175°F.

G:\Drawings\10215001\P-3SB.dwg Tuesday, January 16, 2001 1:20:28 pm jal

STATE OF VERMONT
RICHARD J. CLARA
NO. 7179
PROFESSIONAL ENGINEER
1/12/01

No.	DATE	REVISION

DUNCAN • WISNIEWSKI ARCHITECTURE
258 SOUTH CHAMPLAIN STREET, BURLINGTON, VERMONT 05401 (802) 864-6663

Hallam Associates
60 Farrell Street, Suite 300
So. Burlington, Vermont 05403
(802) 658-4891

WILLISTON INFORMATION CENTER
189 SOUTHBOUND
STATE PROJECT # IM-BLDG (4)

MAIN FLOOR PLUMBING PLAN

DRAWN:	PROJ.No:
J.LAMOTHE	10215
CHECKED:	DATE:
M.COOK	JAN 16, 2001

P-3sb

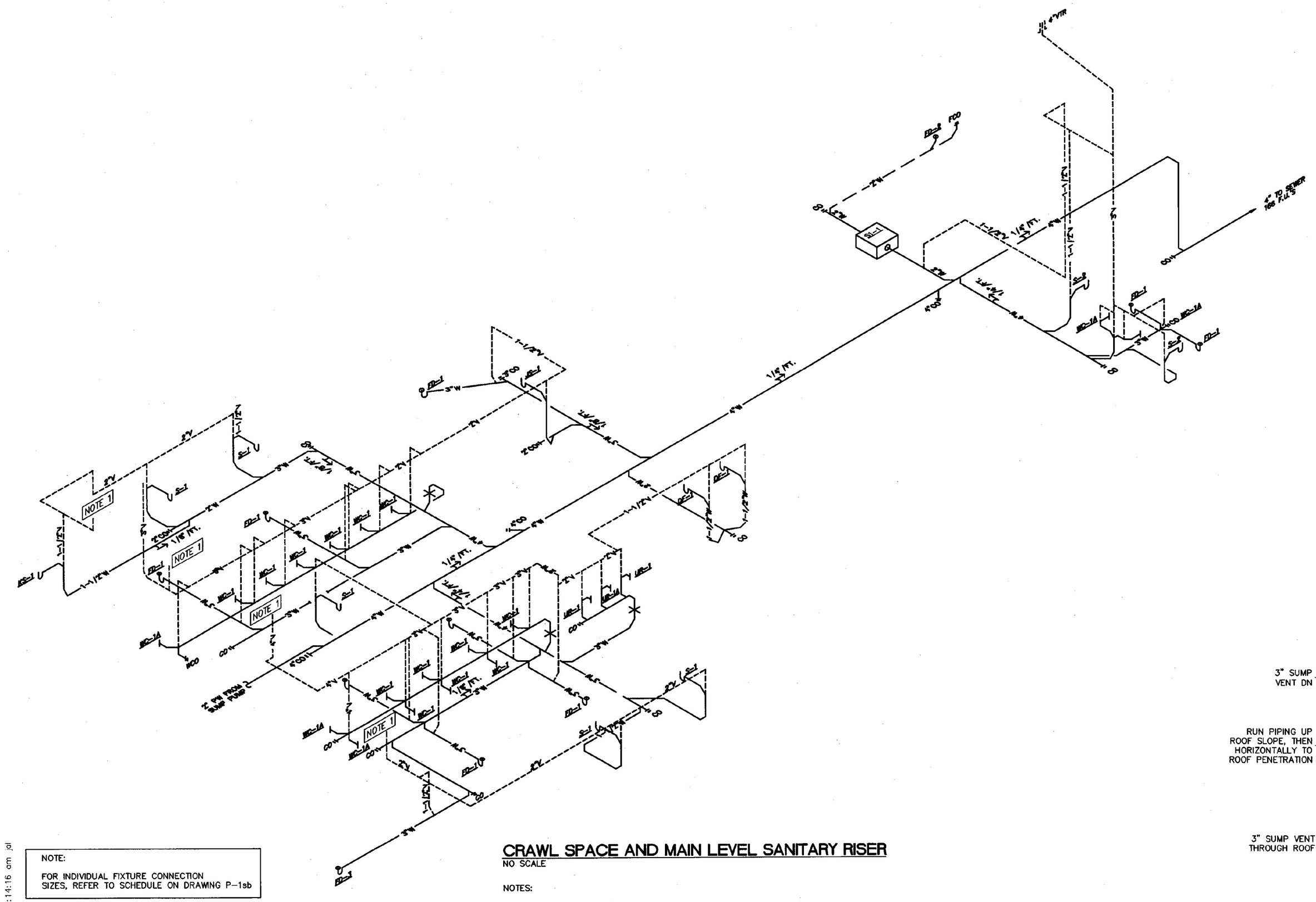

CRAWL SPACE AND MAIN LEVEL SANITARY RISER

NO SCALE

NOTES:

1. FOR CONTINUATION SEE ATTIC PLAN THIS DRAWING.

NOTE:

FOR INDIVIDUAL FIXTURE CONNECTION SIZES, REFER TO SCHEDULE ON DRAWING P-1sb

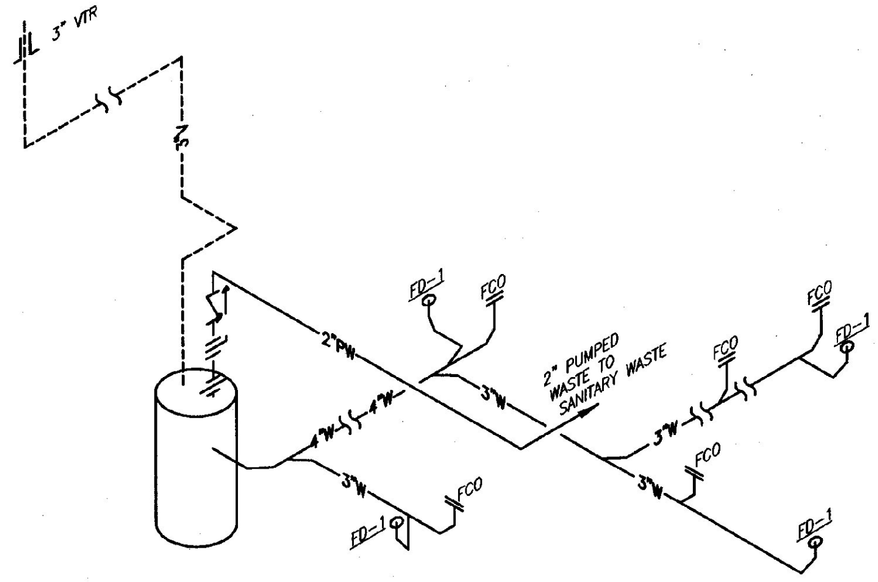

CRAWL SPACE WASTE COLLECTION SYSTEM RISER

NO SCALE

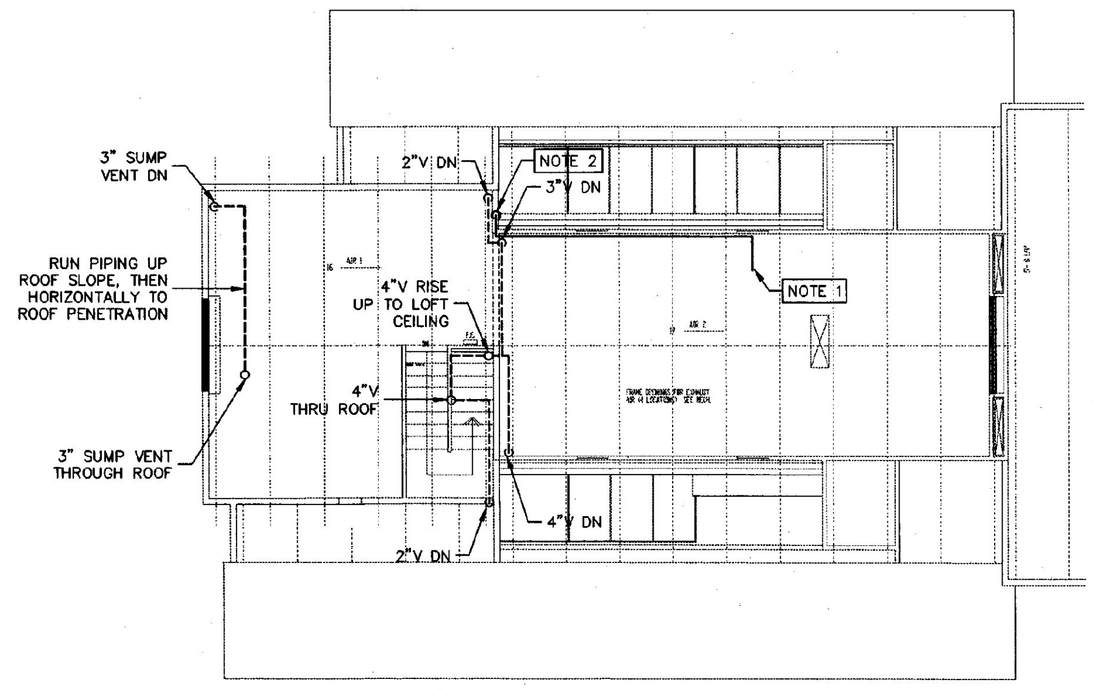

LOFT PLUMBING PLAN

SCALE: 1/8"=1'-0"

NOTES:

1. PROVIDE FULL SIZE CONDENSATE DRAIN LINE FROM AIR HANDLING UNIT DRAIN PAN. ROUTE PIPING ALONG WALL NEXT TO DUCTWORK. SLOPE PIPING IN DIRECTION OF FLOW.
2. ROUTE PIPING DOWN THROUGH FLOOR AND TERMINATE OPEN ENDED ABOVE RECESSED FLOOR AREA 12"± ABOVE FLOOR.

STATE OF VERMONT
RICHARD A. MARA
NO. 7179
PROFESSIONAL ENGINEER
1/12/01

No.	DATE	REVISION

DUNCAN • WISNIEWSKI ARCHITECTURE
255 SOUTH CHAMPLAIN STREET, BURLINGTON, VERMONT 05401 (802) 864-6693

Hallam Associates
80 Farrell Street, Suite 300
So. Burlington, Vermont 05403
(802) 658-4891

WILLISTON INFORMATION CENTER
I89 SOUTHBOUND
STATE PROJECT # IM-BLDG (4)

SANITARY RISERS AND DETAILS AND LOFT PLUMBING PLAN

DRAWN:	PROJ.No:
J.LAMOTHE	10215
CHECKED:	DATE:
M.COOK	JAN 15, 2001

P-4sb

G:\Drawings\10215001\P-4SB.dwg Monday, January 15, 2001 9:14:16 am jal

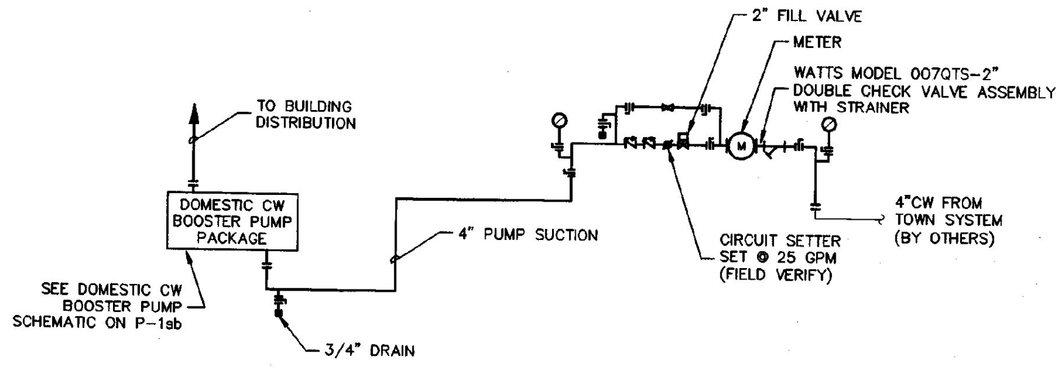

DOMESTIC CW ENTRANCE / FILL VALVE STATION DIAGRAM
NO SCALE

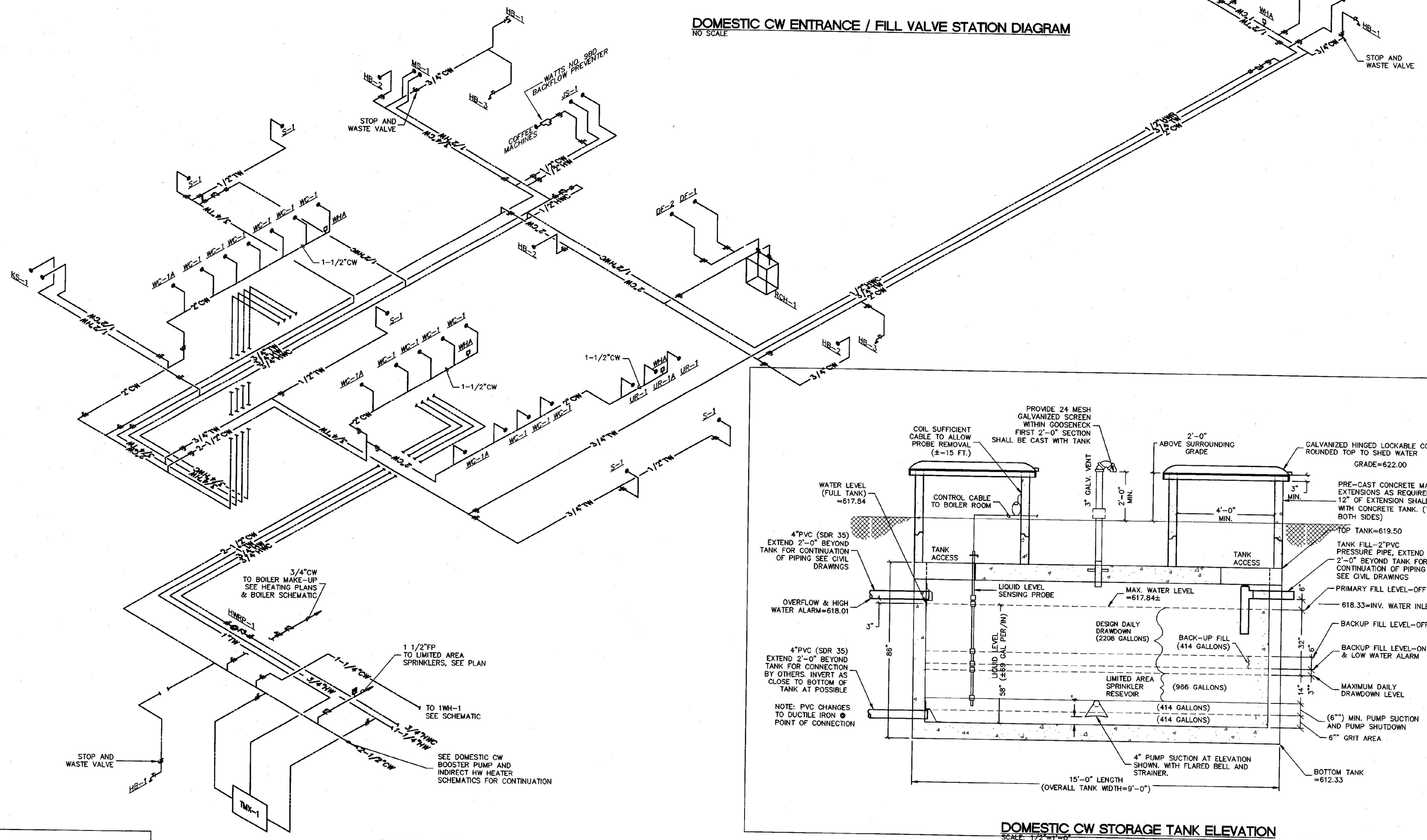

DOMESTIC WATER RISER DIAGRAM
NO SCALE

NOTE:

FOR INDIVIDUAL FIXTURE CONNECTION SIZES, REFER TO SCHEDULE ON DRAWING P-1sb

DOMESTIC CW STORAGE TANK ELEVATION
SCALE: 1/2"=1'-0"

NOTES:

1. SOUTHBOUND SITE ONLY.
2. REFER TO CIVIL DRAWINGS FOR LOCATION OF TANK (DRAWING C1-SB).

STATE OF VERMONT
RICHARD A. CAMARA
NO. 7179
PROFESSIONAL ENGINEER
1/19/01

No.	DATE	REVISION

DUNCAN • WISNIEWSKI ARCHITECTURE
255 SOUTH CHAMPLAIN STREET, BURLINGTON, VERMONT 05401 (802) 864-6563

Hallam Associates
80 Farrell Street, Suite 300
So. Burlington, Vermont 05403
(802) 658-4881

WILLISTON INFORMATION CENTER
I89 SOUTHBOUND
STATE PROJECT # IM-BLDG (4)

DOM. HOT/COLD WATER RISERS

DRAWN:	PROJ.No:
J.LAMOTHE	10215
CHECKED:	DATE:
M.COOK	JAN 16, 2001

P-5sb

G:\Drawings\10215001\P-5SB.dwg Tuesday, January 16, 2001 1:25:48 pm jpl

ELECTRICAL SYMBOL LEGEND

REFER TO ELECTRICAL SPECIFICATIONS DIVISION 16000 FOR MORE INFORMATION.

POWER

- EQUIPMENT CONNECTION
- LIGHT SWITCH, (a) LOWER CASE LETTER DENOTES SWITCH LOOP (#) DENOTES TYPE, 3=3-WAY, 4=4-WAY, etc.
- MOTOR SENTINAL SWITCH
- LIGHT SWITCH WITH PILOT LIGHT
- OCCUPANCY SENSOR LIGHT SWITCH
- MOMENTARY LOW VOLTAGE SWITCH
- DIMMER SWITCH
- SPEED CONTROL SWITCH
- KEY OPERATED SWITCH
- SPECIAL RECEPTACLE, SUBSCRIPT DENOTES NEMA CONFIGURATION
- GFI GROUND FAULT DUPLEX RECEPTACLE
- SINGLE RECEPTACLE
- DUPLEX RECEPTACLE
- QUADRAPLEX RECEPTACLE
- DUPLEX RECEPTACLE, ABOVE COUNTER
- WP GROUND FAULT DUPLEX RECEPTACLE, W/ WEATHER PROOF BOX AND COVER
- DUPLEX RECEPTACLE, FLOOR MOUNTED
- J JUNCTION BOX
- T THERMOSTAT
- FB1 FLOOR BOX, W/DUPLEX RECEPTACLE AND COMBO TELE/DATA OUTLET
- OCCUPANCY SENSOR, WALL MOUNTED
- OCCUPANCY SENSOR, CEILING MOUNTED
- OCCUPANCY SENSOR, POWER PACK
- PHOTO CONTROLLED SWITCH
- AMBIENT LIGHT SENSOR
- NON-FUSED DISCONNECT SWITCH
- FUSED DISCONNECT SWITCH
- MOTOR STARTER
- COMBINATION MOTOR STARTER/DISCONNECT
- CB CIRCUIT BREAKER W/ENCLOSURE
- ATC AUTO TEMPERATURE CONTROL PANEL
- MOTOR
- T TRANSFORMER
- PANELBOARD
- HD HAND DRYER
- TC TIME CLOCK
- PUSH BUTTON
- FIROMATIC
- WIREMOLD, REFER TO PRINT FOR DEVICES TO BE INSTALLED.
- BUSWAY
- CABLETRAY
- WIREWAY
- POWER/COMM. POLE
- BRANCH CIRCUIT HOMERUN TO PANEBOARD
- BRANCH CIRCUIT
- BRANCH CIRCUIT BELOW GRADE
- —PE— UNDERGROUND PRIMARY
- —SE— UNDERGROUND SECONDARY
- —COMM— UNDERGROUND COMMUNICATION
- —CM— CABLE MANAGEMENT SYSTEM

LIGHTING

- EXIT LIGHT, WALL MOUNTED, LETTER DENOTES TYPE
- EXIT LIGHT, CEILING MOUNTED, LETTER DENOTES TYPE
- EMERGENCY LIGHTS, BATTERY
- EMERGENCY LIGHTS, REMOTE BATTERY
- EMERGENCY LIGHTS, REMOTE HEAD
- SURFACE FLUORESCENT FIXTURE, LETTER DENOTES TYPE, SMALL LETTER DENOTES SWITCH LOOP
- RECESSED MOUNTED FLUORESCENT FIXTURE, LETTER DENOTES TYPE, SMALL LETTER DENOTES SWITCH LOOP
- WALL MOUNTED FLUORESCENT FIXTURE, LETTER DENOTES TYPE, SMALL LETTER DENOTES SWITCH LOOP
- STRIP LIGHT FIXTURE, LETTER DENOTES TYPE. SMALL LETTER DENOTES SWITCH LOOP.
- EMERGENCY LIGHT FIXTURE, LETTER DENOTES TYPE.
- WALL MOUNTED LIGHT FIXTURE, LETTER DENOTES TYPE, SMALL LETTER DENOTES SWITCH LOOP
- CEILING MOUNTED/RECESSED LIGHT FIXTURE, LETTER DENOTES TYPE, SMALL LETTER DENOTES SWITCH LOOP
- BOLLARD LIGHT FIXTURE
- POLE LIGHT, SINGLE HEAD
- POLE LIGHT, DOUBLE HEAD
- FAN/LIGHT COMBINATION
- TRACK LIGHTING W/FIXTURE HEAD
- R EMERGENCY LIGHTING SWITCHING RELAY SEE DETAIL 1, SHEET E5.2

FIRE ALARM

- F MANUAL FIRE PULL STATION
- MASTER BOX
- B BELL
- BD BEAM DETECTOR
- S SPEAKER
- SS STROBE LIGHT/SPEAKER
- HL STROBE LIGHT/HORN, SUBSCRIPT INDICATES STROBE CANDELA LEVEL
- L STROBE LIGHT, SUBSCRIPT INDICATES CANDELA LEVEL
- H HORN
- MH MAGNETIC DOOR HOLDER
- RT REMOTE TEST STATION
- CH CHIME/STROBE LIGHT
- S_x SMOKE DETECTOR, NO SUBCRIPT PHOTOELECTRIC, SUBSRIPT I=IONIZATION
- H_x HEAT DETECTOR, SUBSRIPT #=TEMPERTURE, R=RATE OF RISE
- DUCT MOUNTED SMOKE DETECTOR
- DUCT MOUNTED HEAT DETECTOR
- TS SPRINKLER TAMPER SWITCH
- FS SPRINKLER FLOW SWITCH
- FACP FIRE ALARM CONTROL PANEL
- FAVP FIRE ALARM VOICE PANEL
- FA FIRE ALARM ANNUNCIATOR
- C_R FIRE ALARM CONTROL RELAY
- AMM ADDRESSABLE MODULE MONITOR
- IM ISOLATION MODULE

DATA/COMM

- D_X DATA OUTLET, SUBSCRIPT DENOTES QUANITY
- THERMOSTAT
- T_X TELEPHONE OUTLET, SUBSCRIPT DENOTES QUANITY
- D_X COMBINATION DATA/TELEPHONE OUTLET SUBSCRIPT DENOTES QUANITY
- DATA OUTLET, FLOOR MOUNTED
- TELEPHONE OUTLET, FLOOR MOUNTED
- EA ENVIRONMENTAL ALARM POINT
- ES SECURITY ELECTRICAL STRIKE
- KP SECURITY KEY PAD
- MS SECURITY MOTION SENSOR
- SC SECURITY CAMERA
- SP SECURITY CONTROL PANEL
- CR CARD READER

ONE-LINE

- NON-FUSED DISCONNECT SWITCH
- FUSED DISCONNECT SWITCH
- COMBINATION MOTOR STARTER/DISCONNECT SWITCH
- MOTOR STARTER
- PANELBOARD, MAIN LUG ONLY
- PANELBOARD, MAIN CIRCUIT BREAKER
- ATS AUTOMATIC TRANSFER SWITCH
- CIRCUIT BREAKER
- M METER
- TRANSFORMER
- GROUND CONNECTION
- G GENERATOR
- M CT METER W/CONTROL TRANSFORMER
- AM CT AMMETER W/CONTROL TRANSFORMER
- AM AS AMMMETER W/SELECTOR SWITCH
- VM VS VOLTMETER W/SELECTOR SWITCH
- FUSE

ABBREVIATIONS

A	AMPERES
AFF	ABOVE FINISHED FLOOR
AFG	ABOVE FINISHED GRADE
CB	CIRCUIT BREAKER
CDF	CAMPUS DISTRIBUTION FACILITY
CLG	CEILING
C	CONDUIT
DN	DOWN
DWG	DRAWING
EAS	ENVIRONMENTAL ALARM SYSTEM
EF	EXHAUST FAN
ELEV	ELEVATION
EXIST	EXISTING
FA	FIRE ALARM
FACP	FIRE ALARM CONTROL PANEL
FOC	FIBER OPTIC CABLE
FS	FLOAT SWITCH
GEN	GENERATOR
G	GROUND
IDF	INTERMEDIATE DISTRIBUTION FACILITY
JBOX	JUNCTION BOX
LP	LIGHTING PANEL
MDF	MAIN DISTRIBUTION FACILITY
MIN	MINIMUM
MLO	MAIN LUG ONLY
NIC	NOT IN CONTRACT
ø	PHASE
PP	POWER PANEL
P	POLE
SW	SWITCH
SEC	SECONDARY
TYP	TYPICAL
V	VOLTS
W	WIRE
WP	WEATHERPROOF
WW	WIREWAY

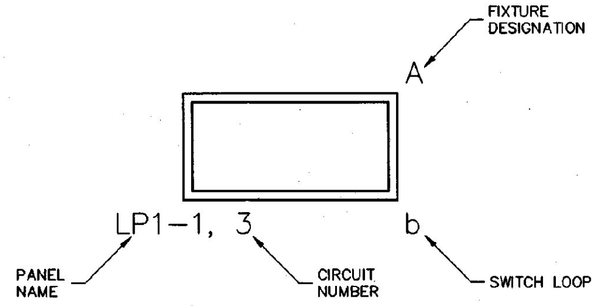

LIGHT FIXTURE DESIGNATION DETAIL

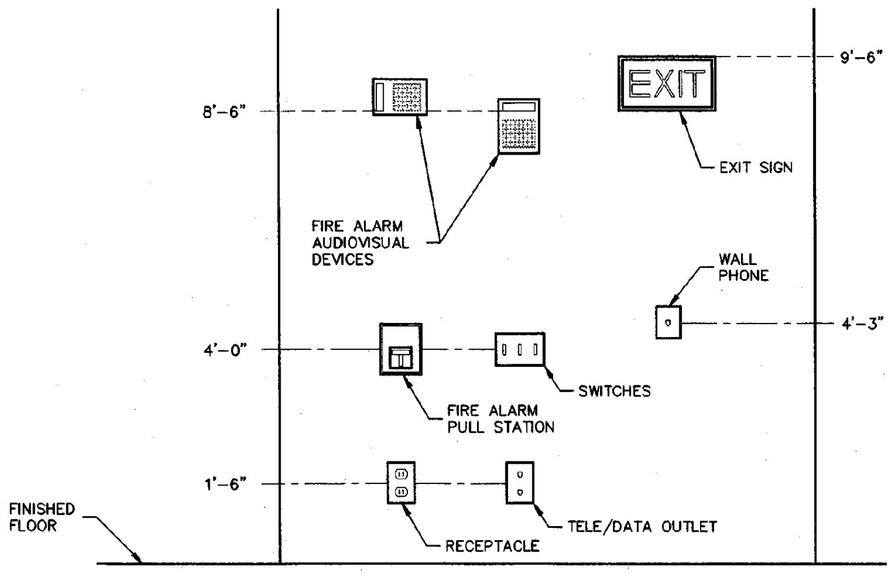

TYPICAL DEVICE MOUNTING HEIGHTS DETAIL

NOT TO SCALE

NOTES:

1. ALL MOUNTING HEIGHTS SHALL BE MEASURED FROM FINISHED FLOOR TO CENTERLINE OF DEVICE, EXCEPT FIRE ALARM AUDIOVISUAL DEVICES AND EXIT SIGNS.
2. DEVICES SHALL BE INSTALLED ON A COMMON VERTICAL CENTERLINE WHEREVER POSSIBLE.
3. ALL DEVICES SHALL BE INSTALLED AT MOUNTING HEIGHTS INDICATED ON THIS DETAIL UNLESS NOTED OTHERWISE. COORDINATE FINAL LOCATIONS OF ALL DEVICES WITH MILLWORK AND ARCHITECTURAL DRAWINGS.

STATE OF VERMONT — BRIAN P. BROWNING — No. 7013 — PROFESSIONAL ENGINEER

No.	DATE	REVISION

DUNCAN • WISNIEWSKI ARCHITECTURE
255 SOUTH CHAMPLAIN STREET, BURLINGTON, VERMONT 05401 (802) 864-9693

Hallam Associates
60 Farrell Street, Suite 300
South Burlington, Vermont 05403
(802) 862-4881

WILLISTON INFORMATION CENTER
189 SOUTHBOUND
STATE PROJECT # IM-BLDG (4)

LEGEND AND ABBREVIATIONS

DRAWN:	PROJ.No:
LCS	10215
CHECKED:	DATE:
BPB	JAN 16, 2001

E-0sb

G:\Drawings\10215001\E-0sb.dwg Monday, January 15, 2001 4:08:27 pm lcs

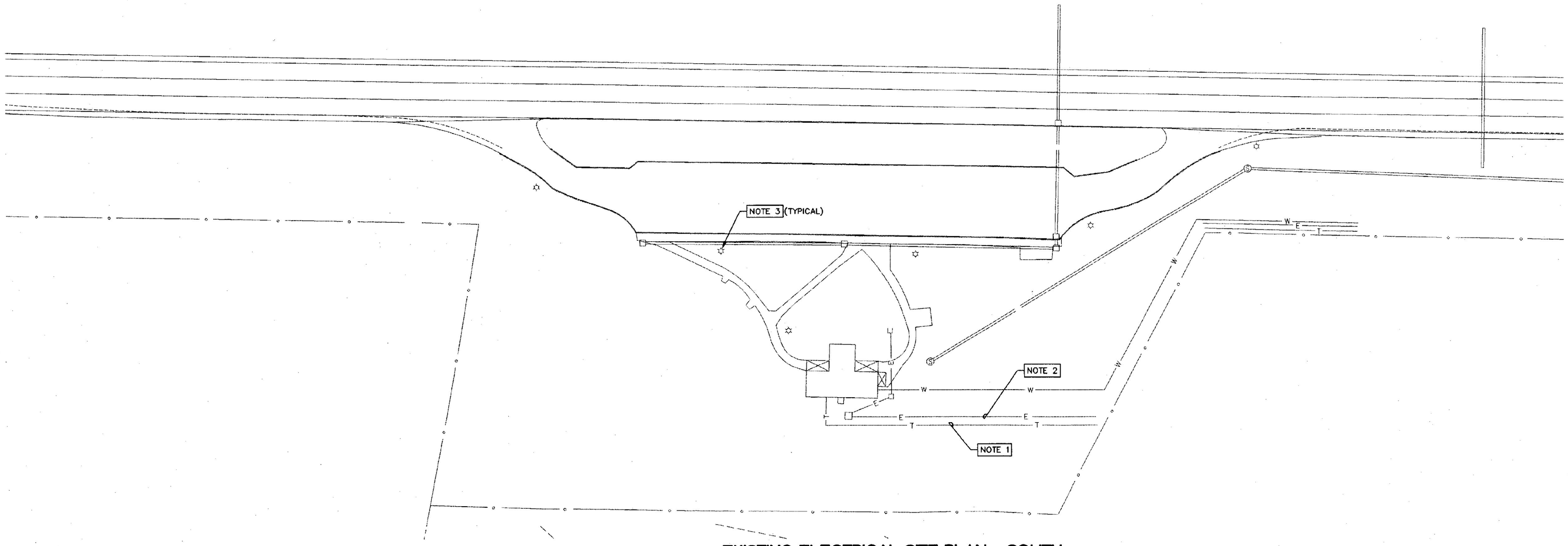

EXISTING ELECTRICAL SITE PLAN - SOUTH
SCALE: 1"=40'

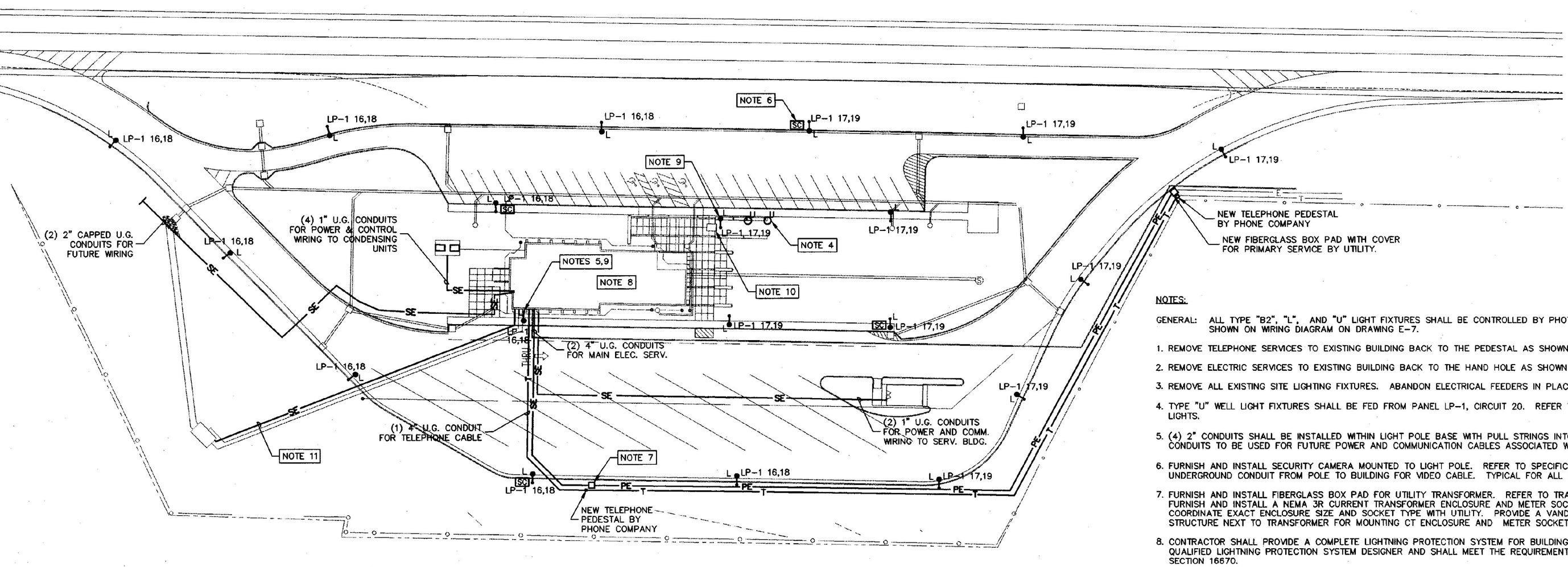

PROPOSED ELECTRICAL SITE PLAN - SOUTH
SCALE: 1"=40'

NOTES:

GENERAL: ALL TYPE "B2", "L", AND "U" LIGHT FIXTURES SHALL BE CONTROLLED BY PHOTOCELL AND LIGHTING CONTACTOR AS SHOWN ON WIRING DIAGRAM ON DRAWING E-7.

1. REMOVE TELEPHONE SERVICES TO EXISTING BUILDING BACK TO THE PEDESTAL AS SHOWN ON NEW SITE PLAN.
2. REMOVE ELECTRIC SERVICES TO EXISTING BUILDING BACK TO THE HAND HOLE AS SHOWN ON NEW SITE PLAN.
3. REMOVE ALL EXISTING SITE LIGHTING FIXTURES. ABANDON ELECTRICAL FEEDERS IN PLACE.
4. TYPE "U" WELL LIGHT FIXTURES SHALL BE FED FROM PANEL LP-1, CIRCUIT 20. REFER TO DRAWING L-9 FOR EXACT LOCATION OF LIGHTS.
5. (4) 2" CONDUITS SHALL BE INSTALLED WITHIN LIGHT POLE BASE WITH PULL STRINGS INTO BUILDING AND OUT TO CAPPED LOCATION. CONDUITS TO BE USED FOR FUTURE POWER AND COMMUNICATION CABLES ASSOCIATED WITH WEIGHING STATION.
6. FURNISH AND INSTALL SECURITY CAMERA MOUNTED TO LIGHT POLE. REFER TO SPECIFICATION FOR MORE DETAIL. PROVIDE (1) 1" UNDERGROUND CONDUIT FROM POLE TO BUILDING FOR VIDEO CABLE. TYPICAL FOR ALL SECURITY CAMERAS SHOWN.
7. FURNISH AND INSTALL FIBERGLASS BOX PAD FOR UTILITY TRANSFORMER. REFER TO TRANSFORMER PAD DETAIL ON DRAWING E-7. FURNISH AND INSTALL A NEMA 3R CURRENT TRANSFORMER ENCLOSURE AND METER SOCKET FOR UTILITY METERING EQUIPMENT. COORDINATE EXACT ENCLOSURE SIZE AND SOCKET TYPE WITH UTILITY. PROVIDE A VANDAL PROOF COVER FOR METER. PROVIDE A STRUCTURE NEXT TO TRANSFORMER FOR MOUNTING CT ENCLOSURE AND METER SOCKET.
8. CONTRACTOR SHALL PROVIDE A COMPLETE LIGHTNING PROTECTION SYSTEM FOR BUILDING. SYSTEM SHALL BE DESIGNED BY A QUALIFIED LIGHTNING PROTECTION SYSTEM DESIGNER AND SHALL MEET THE REQUIREMENTS OF UL96A, NFPA 78, AND SPECIFICATION SECTION 16670.
9. PROVIDE LIGHT POLE WITH 120V GFCI DUPLEX RECEPTACLE.
10. FURNISH AND INSTALL (4) TYPE "B2" LIGHT FIXTURES IN CEILING OF KIOSK AND FEED FROM PANEL LP-1, CIRCUIT 13. FURNISH AND INSTALL (2) PAY PHONE JACKS WITHIN KIOSK (ONE PHONE TO BE TTY TYPE). REFER TO ARCHITECTURAL PLANS FOR EXACT MOUNTING LOCATION OF LIGHTS AND PHONE JACKS.
11. FURNISH AND INSTALL 1" CONDUIT FROM BUILDING TO STORAGE TANK FOR CONTROL WIRING.

STATE OF VERMONT
BRIAN P. BUSWELL
7013
PROFESSIONAL ENGINEER

No.	DATE	REVISION

DUNCAN • WISNIEWSKI ARCHITECTURE
258 SOUTH CHAMPLAIN STREET, BURLINGTON, VERMONT 05401 (802) 864-6693

Hallam Associates
60 Farrell Street, Suite 300
So. Burlington, Vermont 05403
(802) 658-4631

WILLISTON INFORMATION CENTER
I89 SOUTHBOUND
STATE PROJECT # IM-BLDG (4)

ELECTRICAL SITE PLAN - SOUTH

DRAWN:	PROJ.No:
LCS	10215
CHECKED:	DATE:
BPB	JAN 16, 2001

E-1sb

G:\Drawings\10215001\E-1sb.dwg Monday, January 15, 2001 5:14:23 pm lcs

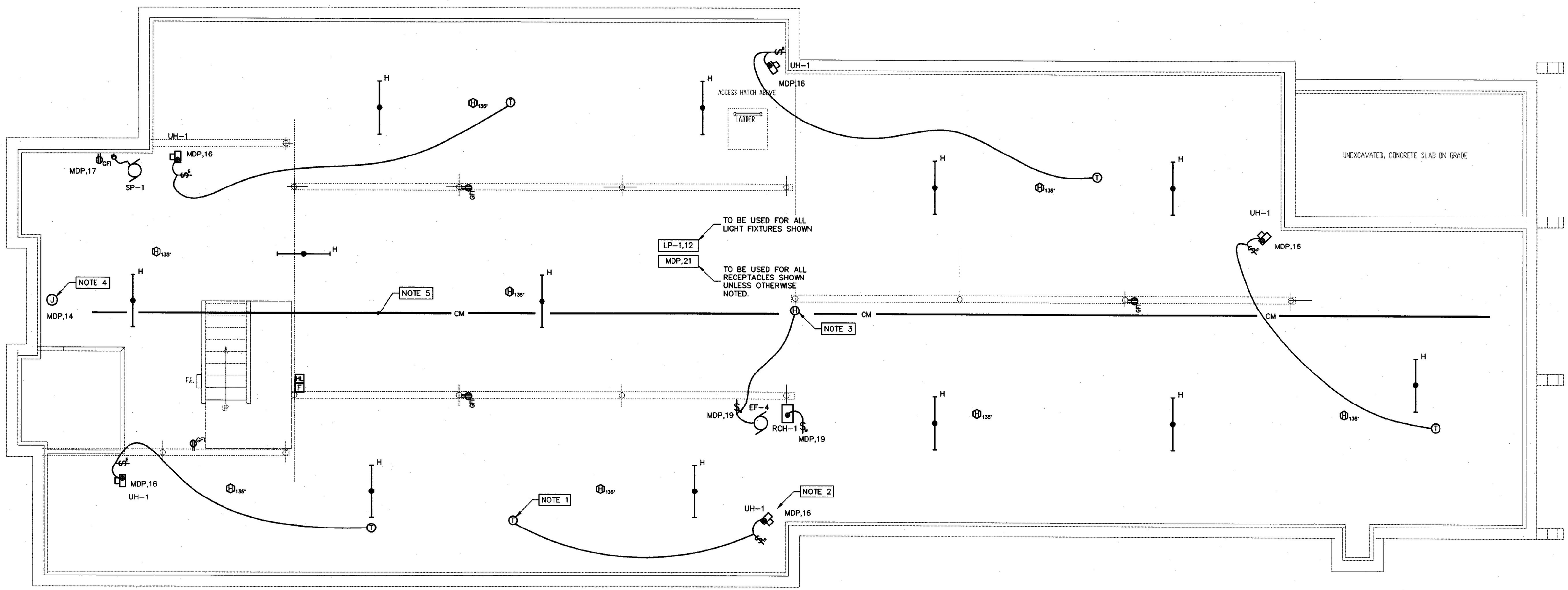

CRAWL SPACE LIGHTING AND POWER PLAN

SCALE: 1/4"=1'-0"

NOTES:

1. THERMOSTAT TO BE FURNISHED BY MECHANICAL CONTRACTOR AND INSTALLED BY ELECTRICAL CONTRACTOR AT LOCATION SHOWN. REFER TO THERMOSTAT/AQUASTAT CONTROL DIAGRAM ON DRAWING E-7 FOR MORE DETAIL. TYPICAL FOR ALL THERMOSTATS SHOWN FOR ALL UNIT HEATERS THROUGHOUT BUILDING. THERMOSTAT TO BE INSTALLED ON UNISTRUT MOUNTED TO FLOOR JOIST ABOVE SO THERMOSTAT IS 8" BELOW BOTTOM OF FLOOR JOIST.
2. MECHANICAL CONTRACTOR TO FURNISH AND INSTALL UNIT HEATER AND AQUASTAT MOUNTED TO HOT WATER PIPING. ELECTRICAL CONTRACTOR TO WIRE TO UNIT HEATER AND AQUASTAT AS SHOWN ON THERMOSTAT/AQUASTAT CONTROL DIAGRAM ON DRAWING E-7. TYPICAL FOR ALL UNIT HEATERS SHOWN THROUGHOUT BUILDING.
3. HUMIDISTAT TO BE FURNISHED BY MECHANICAL CONTRACTOR AND INSTALLED BY ELECTRICAL CONTRACTOR AT LOCATION SHOWN. REFER TO HUMIDISTAT CONTROL DIAGRAM ON DRAWING E-7 FOR MORE DETAIL.
4. FURNISH AND INSTALL JUNCTION BOX FOR CONTROL POWER FOR MECHANICAL EQUIPMENT.
5. FURNISH AND INSTALL (2) ERICO CAT 32 J-HOOKS MOUNTED TO FLOOR JOISTS FOR COMMUNICATIONS CABLE MANAGEMENT. REFER TO CABLE MANAGEMENT DETAIL ON DRAWING E-7.

G:\Drawings\10215001\E-2sb.dwg Monday, January 15, 2001 5:18:30 pm lcs

STATE OF VERMONT
BRIAN P. BROWNING
No. 7013
PROFESSIONAL ENGINEER

No.	DATE	REVISION

DUNCAN • WISNIEWSKI ARCHITECTURE
255 SOUTH CHAMPLAIN STREET, BURLINGTON, VERMONT 05401 (802) 864-6663

Hallam Associates
60 Farrell Street, Suite 300
So. Burlington, Vermont 05403
(802) 658-4991

WILLISTON INFORMATION CENTER
189 SOUTHBOUND
STATE PROJECT # IM-BLDG (4)

CRAWL SPACE LTG AND POWER PLAN

DRAWN:	PROJ.No:
LCS	10215
CHECKED:	DATE:
BPB	JAN 16, 2001

E-2sb

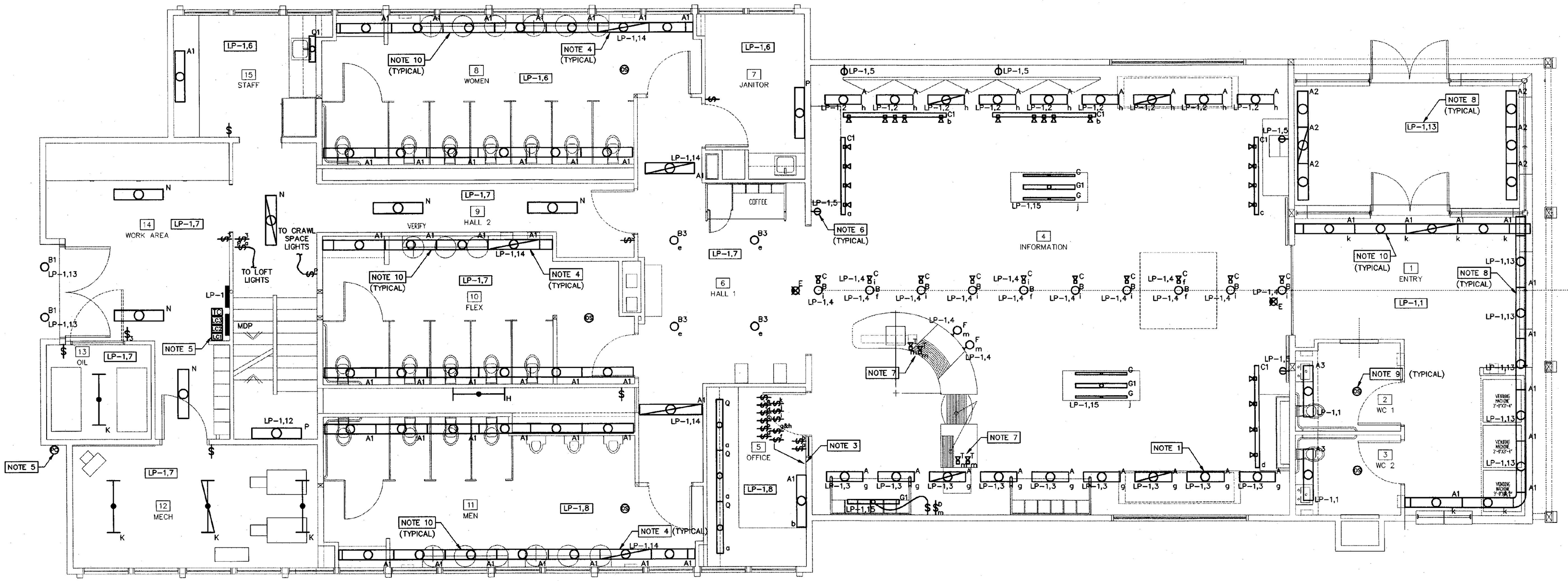

MAIN FLOOR LIGHTING PLAN

SCALE: 1/4"=1'-0"

NOTES:

1. FIXTURE TYPE "A" SHALL BE ROTATED IN FIELD FOR CORRECT MOUNTING ANGLE. COORDINATE MOUNTING ANIGLE WITH ARCHITECT PRIOR TO PERMANENT MOUNTING OF FIXTURES. TYPICAL FOR ALL TYPE "A" FIXTURES.
2. (GENERAL) REFER TO ARCHITECTURAL DETAILS AND ELEVATIONS FOR MOUNTING AND LOCATIONS OF ALL FIXTURES. ALL CONDUIT WIRING FOR LIGHT FIXTURES SHALL BE INSTALLED WITHIN WALLS AND WITHIN BEAMS. IT WILL BE NECESSARY TO NOTCH THE TOP OF THE EXPOSED BEAMS IN ORDER TO ROUTE CABLING TO FIXTURES IN THE INFORMATION SPACE. NO SURFACE RACEWAY SHALL BE USED IN PUBLIC SPACES.
3. REFER TO SWITCH ELEVATION DETAIL ON THIS SHEET FOR SWITCHING DESIGNATIONS AND CONTROL LOOP.
4. ALL FIXTURES FED FROM PANEL LP-1, CIRCUIT 14 SHALL OPERATE CONTINUOUSLY.
5. FURNISH AND INSTALL PHOTOCELL, LIGHTING CONTACTORS, AND TIME CLOCK TO CONTROL FIXTURES AS DESIGNATED ON WIRING DIAGRAM. REFER TO SPECIFICATIONS FOR INFORMATION ON EQUIPMENT AND REFER TO WIRING DIAGRAMS ON DRAWING E-7 FOR WIRING DETAILS.
6. FURNISH AND INSTALL SINGLE RECEPTACLE 10' AFF FOR TYPE C1 FIXTURES TO PROVIDE POWER TO LIGHTING TRACK.
7. FIXTURE TYPE "T" SHALL BE MOUNTED TO MONOPOINT FEED INSTALLED ABOVE WORK SURFACE WITH LOW VOLTAGE TRANSFORMERS LOCATED IN CRAWL SPACE. COORDINATE MOUNTING LOCATION AND ANGLE WITH ARCHITECT PRIOR TO PERMANENT MOUNTING OF FIXTURES. TYPICAL FOR ALL TYPE "T" FIXTURES.
8. ALL FIXTURES FED FROM PANEL LP-1, CIRCUIT 13 LOCATED IN THE VESTIBULE, ENTRY, SERVICE BUILDING EXTERIOR, REAR ENTRANCE AND LOFT STORAGE SHALL BE CONTROLLED BY PHOTOCELL AND LIGHTING CONTACTOR AS SHOWN ON WIRING DIAGRAM ON DRAWING E-7.
9. FURNISH AND INSTALL CEILING MOUNTED OCCUPANCY SENSOR AT LOCATION SHOWN TO CONTROL FIXTURES WITHIN ROOM. SET TIME DELAY ON SENSOR TO MAXIMUM SETTING IN ROOMS 8, 10, & 11 AND SET TO 5 MINUTES IN ALL OTHER AREAS. PROVIDE A SLAVE PACK FOR SENSORS IN ROOM WC1 AND WC2 TO CONTROL EXHAUST FAN.
10. FIXTURE TYPE "A1" IN REST ROOMS 8, 10, 11 AND ENTRY SHALL BE MOUNTED CONTINUOUS FROM WALL TO WALL. PROVIDE ALL NECESSARY MANUFACTURED END PIECES FOR CONTINUOUS MOUNTING.

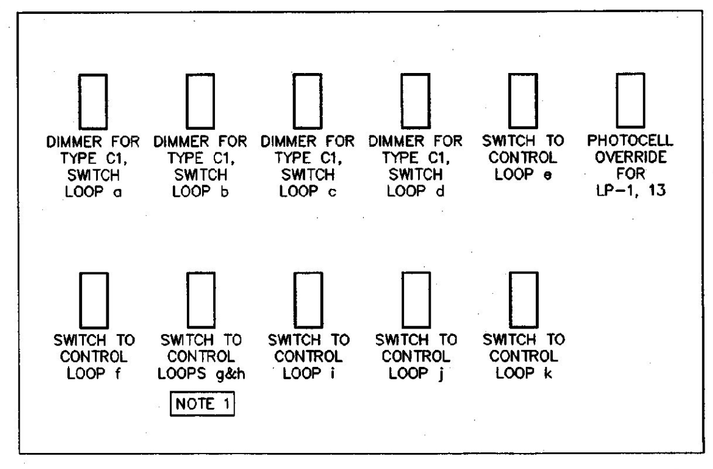

SWITCH ELEVATION DETAIL

SCALE: NONE

NOTES:

1. SWITCH TO CONTROL LIGHTING CONTACTOR LC3 IN SERVICE AREA. REFER TO WIRING DIAGRAM ON DRAWING E-7 FOR DETAIL.

STATE OF VERMONT
BRIAN P. BROWNING
NO. 7012
PROFESSIONAL ENGINEER

No.	DATE	REVISION

DUNCAN • WISNIEWSKI ARCHITECTURE
255 SOUTH CHAMPLAIN STREET, BURLINGTON, VERMONT 05401 (802) 864-6660

Hallam Associates
60 Parrell Street, Suite 300
So. Burlington, Vermont 05403
(802) 658-4881

WILLISTON INFORMATION CENTER
I89 SOUTHBOUND
STATE PROJECT # IM-BLDG (4)

MAIN FLOOR LIGHTING PLAN

DRAWN:	PROJ.No:
LCS	10215
CHECKED:	DATE:
BPB	JAN 16, 2001

E-3sb

G:\Drawings\10215001\E-3sb.dwg Tuesday, January 16, 2001 1:14:56 pm lcs

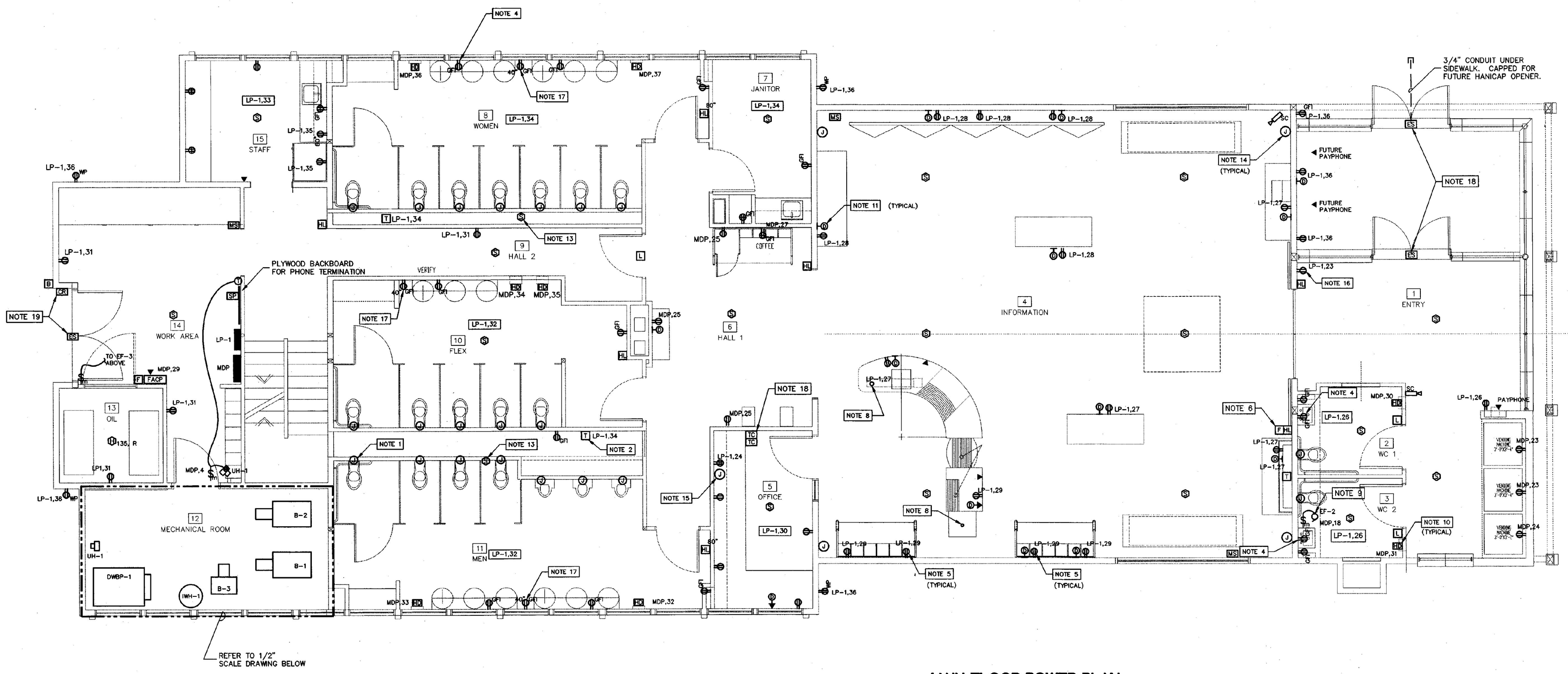

MAIN FLOOR POWER PLAN

SCALE: 1/4"=1'-0"

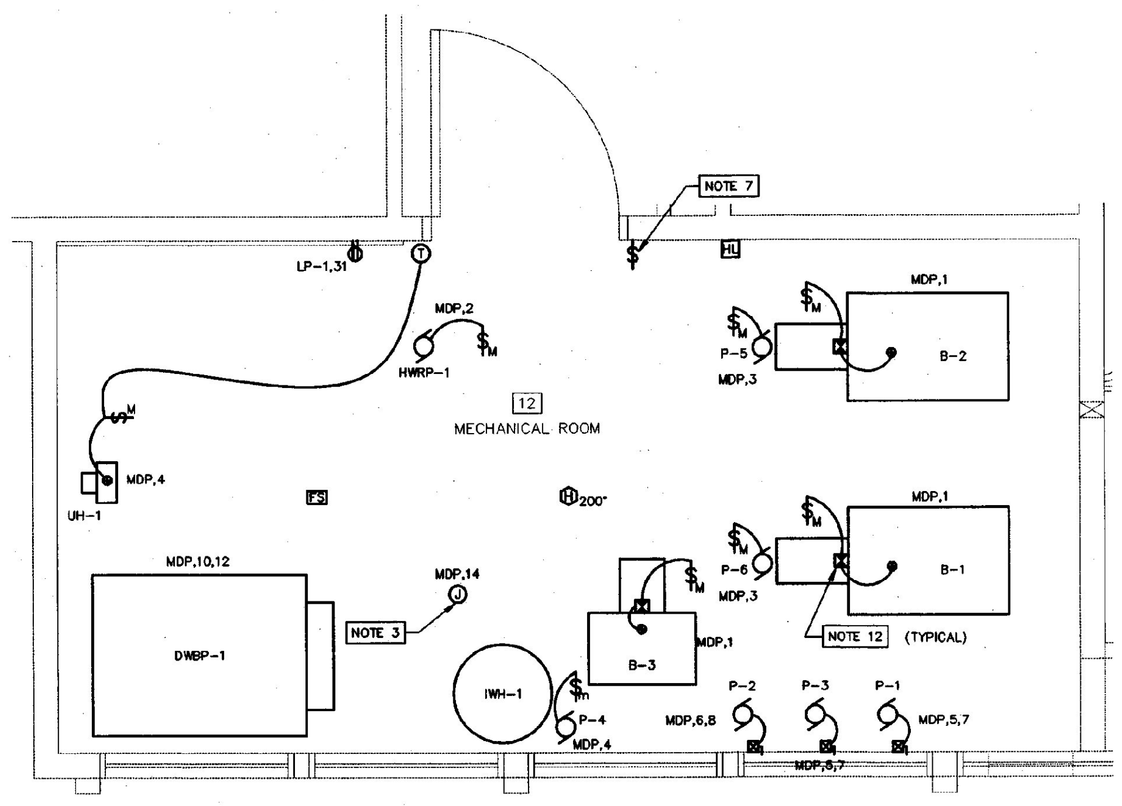

MECHANICAL ROOM

SCALE: 1/2"=1'-0"

NOTES:

1. FURNISH AND INSTALL 4" SQUARE x 2-1/8" DEEP OUTLET BOX WITH 4" SQUARE, 3/4" HIGH PLASTER RING. COORDINATE WITH PLUMBING LOCATION. TYPICAL FOR ALL J-BOXES SHOWN AT WATER CLOSETS AND URINALS. INFRARED SENSORS SHALL BE FURNISHED BY MECHANICAL CONTRACTOR AND INSTALLED AND WIRED BY ELECTRICAL CONTRACTOR.
2. FURNISH AND INSTALL 120VAC TO 24VAC TRANSFORMER, 100VA FOR INFRARED FLUSH CONTROL. TYPICAL FOR ALL TRANSFORMERS SHOWN ON THIS SHEET. REFER TO WIRING DIAGRAM ON E-7 FOR WIRING DETAILS.
3. FURNISH AND INSTALL JUNCTION BOX FOR CONTROL POWER.
4. FURNISH AND INSTALL RECEPTACLE FOR INFRARED SINKS. COORDINATE MOUNTING LOCATION WITH MECHANICAL CONTRACTOR. TYPICAL FOR ALL SINKS IN ROOMS 8, 10, 11, WC1 AND WC2.
5. COORDINATE LOCATION OF RECEPTACLES AND DATA OUTLETS MOUNTED BEHIND CABINETS IN THE FIELD WITH ARCHITECT.
6. PULL STATION SHALL HAVE PLASTIC COVER WITH LOCAL TAMPER RESISTANT ALARM.
7. FURNISH AND INSTALL BOILER SHUTOFF SWITCH WIRED TO CONTROL CIRCUIT FOR EACH BOILER.
8. ALL POWER AND COMMUNICATIONS WIRING SHALL BE INSTALLED WITHIN ARCHITECTURAL PEDESTALS FROM CRAWL SPACE BELOW.
9. EF-2 SHALL BE CONTROLLED BY OCCUPANCY SENSORS MOUNTED ON CEILING OF WC1 AND WC2. FAN SHALL BE WIRED SUCH THAT WHEN EITHER OCCUPANCY SENSOR IS ACTIVATED THE FAN SHALL RUN.
10. ELECTRICAL CONTRACTOR SHALL FURNISH AND INSTALL HAND DRYERS IN LOCATIONS SHOWN. REFER TO ARCHITECTURAL DRAWINGS FOR EXACT LOCATION AND MOUNTING HEIGHT. REFER TO ELECTRICAL SPECS FOR MODEL.
11. AT ALL DATA AND TELEPHONE LOCATIONS, CONTRACTOR SHALL PROVIDE A 4" SQUARE DEVICE BOX WITH 3/4" CONDUIT TO CABLE MANAGEMENT IN CRAWL SPACE. CONTRACTOR SHALL PROVIDE ALL CABLING AND OUTLETS FOR THE PHONE SYSTEM PER SPECIFICATIONS. DATA CABLING SHALL BE DONE BY OWNER AT A LATER DATE. WHERE FUTURE PAY PHONES ARE SHOWN, PROVIDE BOX AND CONDUIT TO CRAWL SPACE ONLY.
12. FURNISH AND INSTALL FIROMATIC MOUNTED ABOVE EACH BOILER AND WIRED IN LINE WITH POWER TO BOILER.
13. SMOKE DETECTORS SHALL BE MOUNTED ON THE WALL NO LESS THAN 3' FROM THE CEILING.
14. FURNISH AND INSTALL 4" SQUARE DEVICE BOX WITH 3/4" CONDUIT TO THE CRAWL SPACE FOR FLUSH MOUNTED SPEAKERS, PROVIDED BY THE OWNER. COORDINATE LOCATION IN THE FIELD WITH THE OWNER.
15. FURNISH AND INSTALL 4" SQUARE DEVICE BOX WITH 1-1/4" CONDUIT TO CRAWL SPACE FOR SIGNAL AND CONTROL CABLING TO MONITOR, VCR AND JOYSTICK. COORDINATE LOCATION IN THE FIELD WITH ARCHITECT.
16. FURNISH AND INSTALL RECEPTACLE FOR PEOPLE COUNTING EQUIPMENT. PEOPLE COUNTING EQUIPMENT SHALL BE PROVIDED BY GENERAL CONTRACTOR.
17. COORDINATE LOCATION AND MOUNTING HEIGHT OF RECEPTACLES IN THE FIELD WITH ARCHITECT.
18. PROVIDE 3/4" CONDUIT AND WIRING FROM ELECTRICAL STRIKE ON DOOR INTO CRAWL SPACE AND TO TIME CLOCKS LOCATED IN OFFICE. PROVIDE (2) TIME CLOCKS TO CONTROL ELECTRIC STRIKES. USE TORK MODEL 1101 OR EQUAL. POWER TIME CLOCKS AND ELECTRIC STRIKES FROM PANEL LP-1, CIRCUIT 30.
19. PROVIDE 3/4" CONDUIT AND WIRING BETWEEN CARD READER AND ELECTRIC DOOR STRIKE. CARD READER TO BE INSTALLED BY DOOR VENDOR. POWER SYSTEM FROM PANEL LP-1, CIRCUIT 31.

STATE OF VERMONT
BRIAN P. BROWNING
No. 7913
PROFESSIONAL ENGINEER

No.	DATE	REVISION

DUNCAN • WISNIEWSKI ARCHITECTURE
255 SOUTH CHAMPLAIN STREET, BURLINGTON, VERMONT 05401 (802) 864-0666

Hallam Associates
60 Parrell Street, Suite 300
So. Burlington, Vermont 05403
(802) 658-4861

WILLISTON INFORMATION CENTER
189 SOUTHBOUND
STATE PROJECT # IM-BLDG (4)

MAIN FLOOR POWER PLAN

DRAWN:	PROJ.No:
LCS	10215
CHECKED:	DATE:
BPB	JAN 16, 2001

E-4sb

G:\Drawings\10215001\E-4sb.dwg Tuesday, January 16, 2001 12:41:09 pm lcs

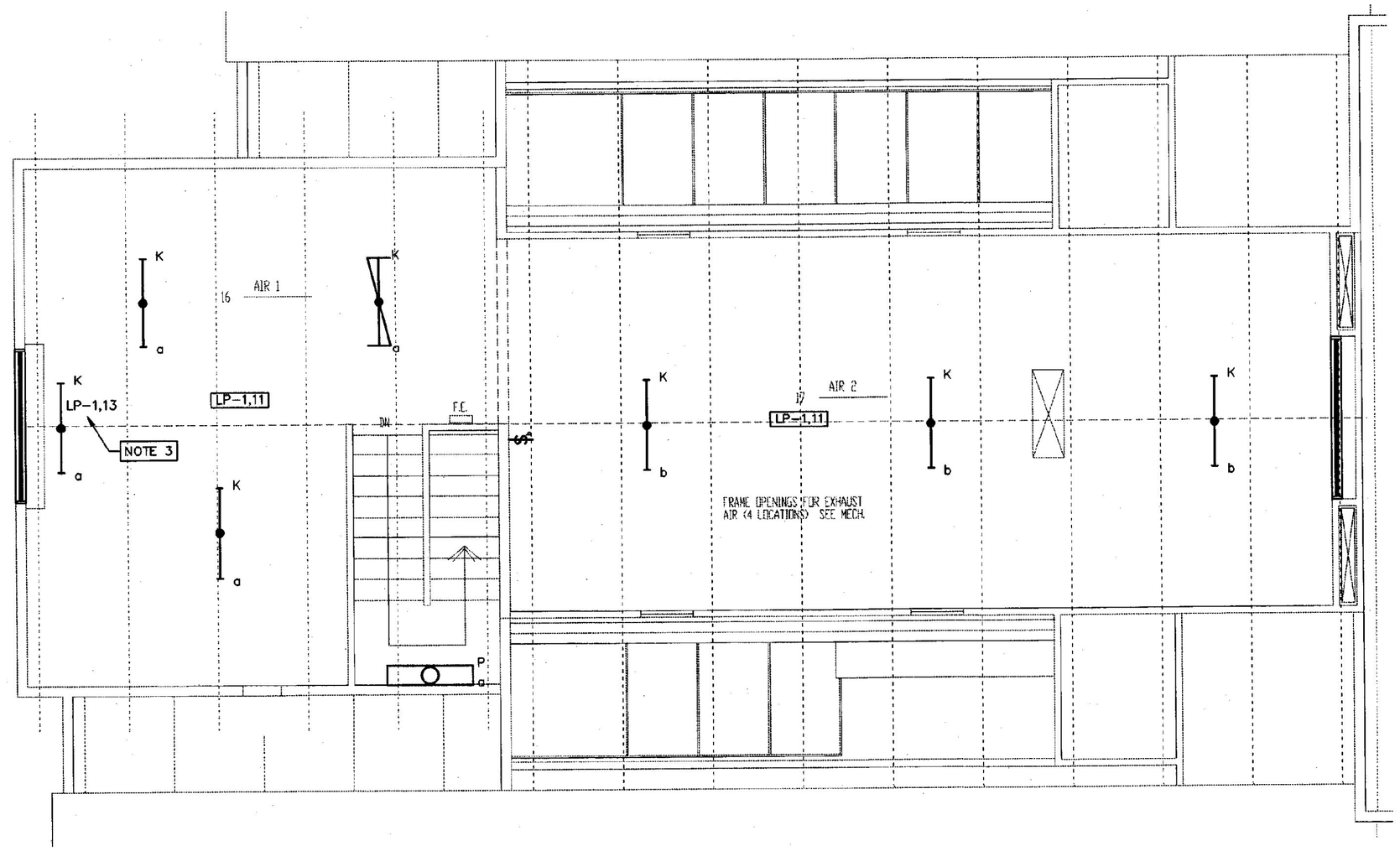

LOFT LIGHTING PLAN
SCALE: 1/4"=1'-0"

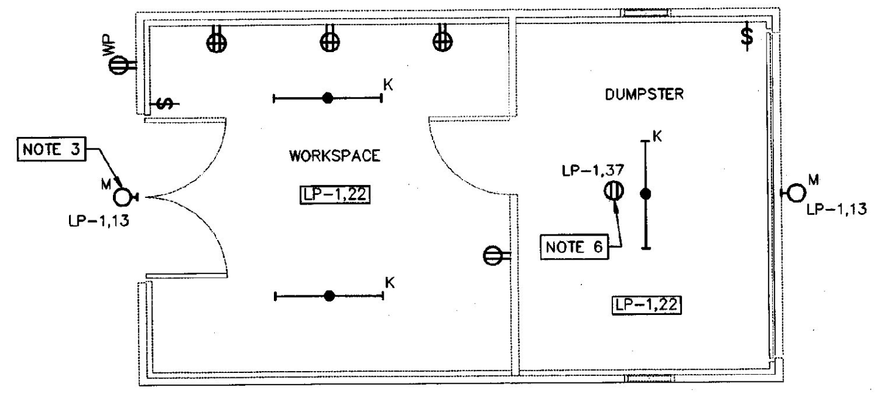

SERVICE BUILDING LIGHTING AND POWER PLAN
SCALE: 1/4"=1'-0"

NOTES: (APPLY TO LOFT AND SERVICE BUILDING PLANS)

1. FURNISH AND INSTALL ROTARY PHASE CONVERTER. REFER TO WIRING DIAGRAM BELOW AND SPECIFICATIONS FOR MORE DETAIL.
2. FURNISH AND INSTALL JUNCTION BOX FOR CONTROL POWER.
3. ALL FIXTURES FED FROM PANEL LP-1, CIRCUIT 13 SHALL BE CONTROLLED BY PHOTOCELL AND LIGHTING CONTACTOR AS SHOWN ON WIRING DIAGRAM ON DRAWING E-7.
4. THERMOSTAT FOR EXHAUST FAN TO BE FURNISHED BY MECHANICAL CONTRACTOR AND INSTALLED BY ELECTRICAL CONTRACTOR AT LOCATION SHOWN. REFER TO EXHAUST FAN #5 WIRING DIAGRAM BELOW FOR MORE INFORMATION.
5. PROVIDE A DUCT MOUNTED SMOKE DETECTOR IN EACH SUPPLY DUCT OF MULTI-ZONE UNIT. LOCATE DUCT SMOKE DETECTORS AND ASSOCIATED REMOTE TEST SWITCHES IN MECHANICAL ROOM. TYPICAL OF (7) DUCT SMOKE DETECTORS AT THIS LOCATION.
6. FURNISH AND INSTALL DEDICATED RECEPTACLE FOR ELECTRIC GARAGE DOOR.

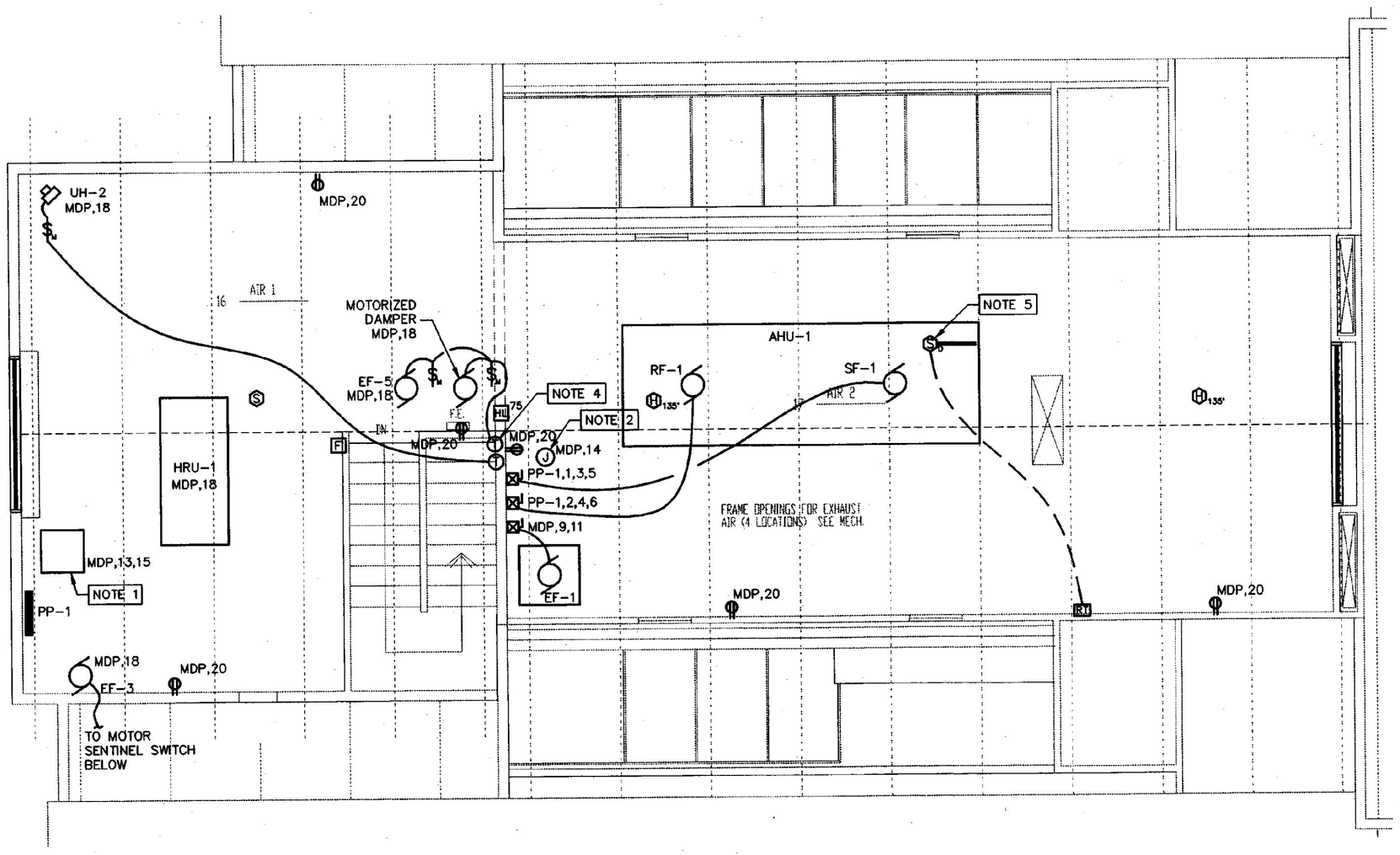

LOFT POWER PLAN
SCALE: 1/4"=1'-0"

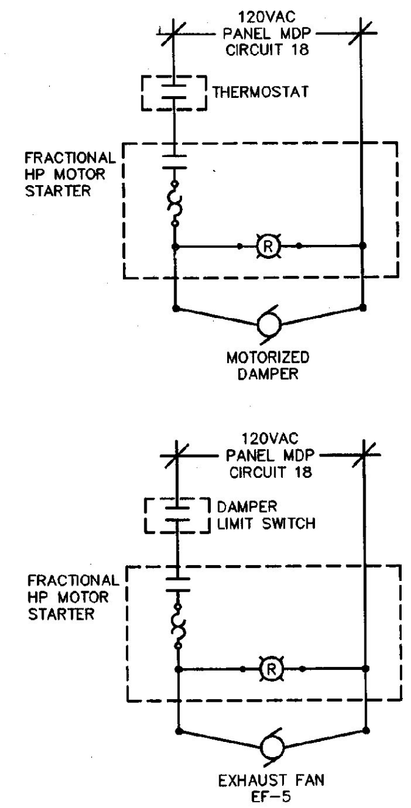

EXHUAST FAN #5 WIRING DIAGRAM
SCALE: NONE

NOTES:

1. LIMIT SWITCH SHALL BE PROVIDED BY MECHANICAL CONTRACTOR.
2. THERMOSTAT SHALL BE PROVIDED BY MECHANICAL CONTRACTOR AND INSTALLED BY ELECTRICAL CONTRACTOR.

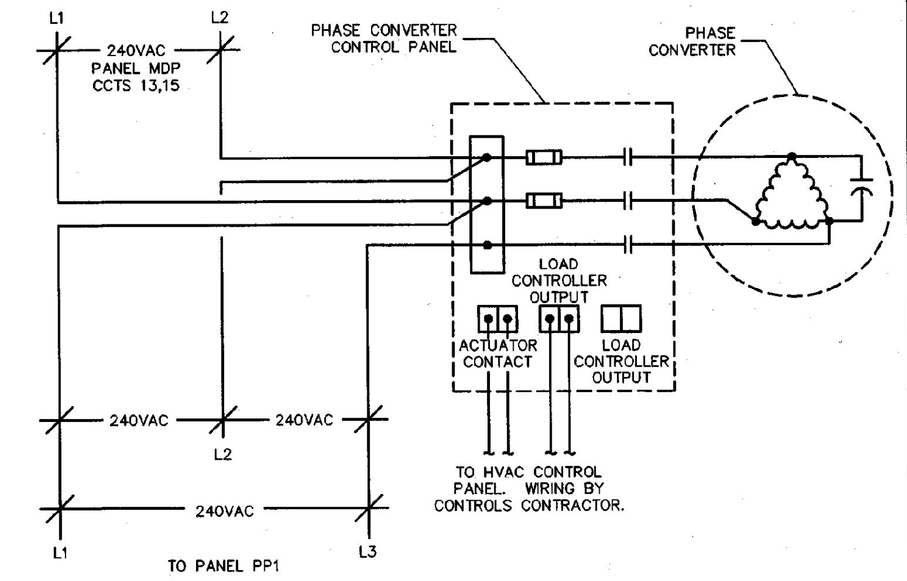

PHASE CONVERTER WIRING DIAGRAM
SCALE: NONE

STATE OF VERMONT
BRIAN P. BROWNING
No. 7013
PROFESSIONAL ENGINEER

No.	DATE	REVISION

DUNCAN • WISNIEWSKI ARCHITECTURE
255 SOUTH CHAMPLAIN STREET, BURLINGTON, VERMONT 05401 (802) 864-6693

Hallam Associates
60 Farrell Street, Suite 300
So. Burlington, Vermont 05403
(802) 658-4891

WILLISTON INFORMATION CENTER
189 SOUTHBOUND
STATE PROJECT # IM-BLDG (4)

LOFT LIGHTING AND POWER PLAN

DRAWN:	PROJ.No:
LCS	10215
CHECKED:	DATE:
BPB	JAN 16, 2001

E-5sb

G:\Drawings\10215001\E-5sb.dwg Monday, January 15, 2001 5:50:42 pm lcs

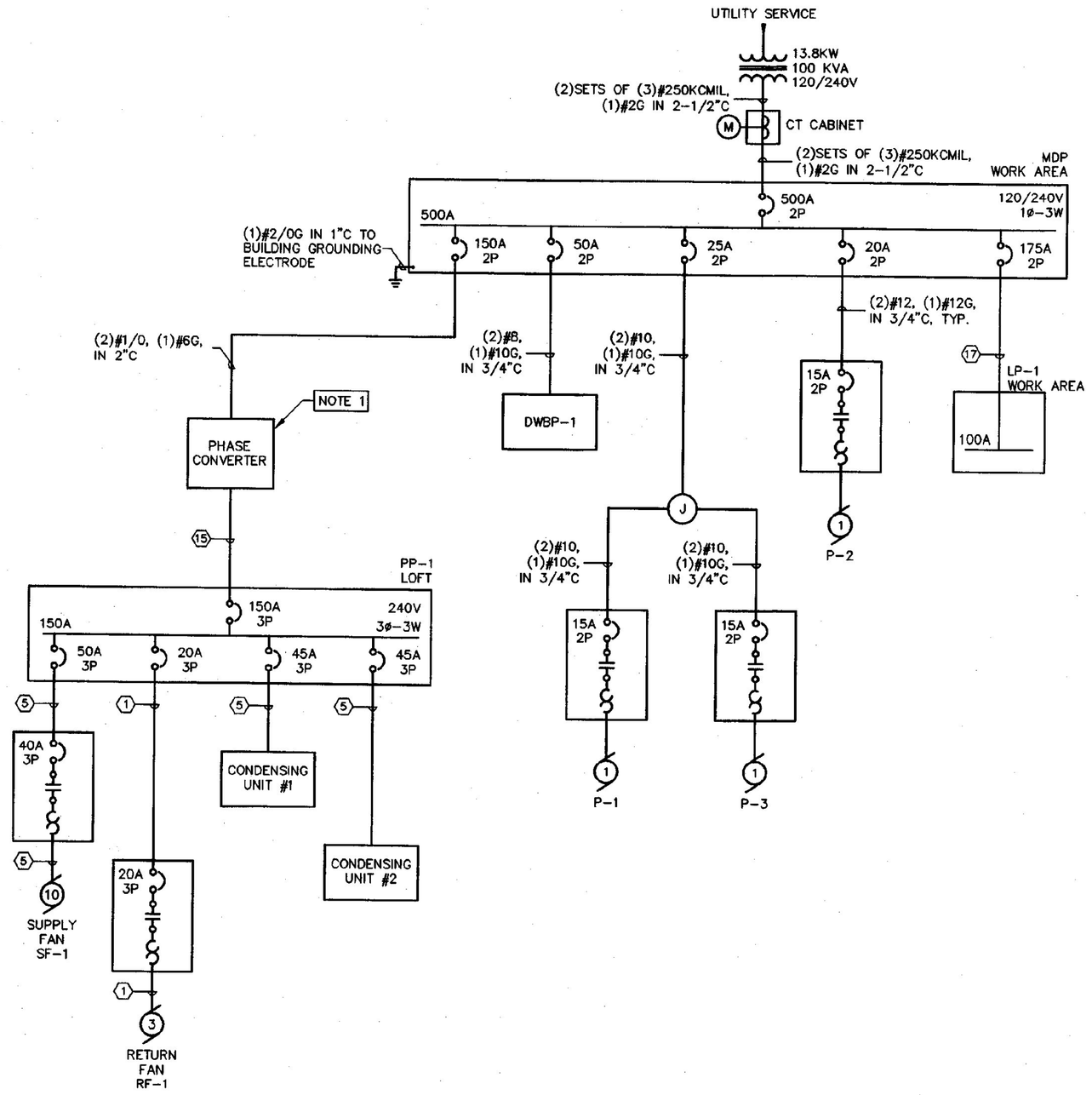

ELECTRICAL ONE-LINE DIAGRAM

NOTES:

1. REFER TO PHASE CONVERTER WIRING DIAGRAM ON DRAWING E-7 AND SPECIFICATION FOR MORE INFORMATION.

WIRE AND CONDUIT SCHEDULE

HEX #	WIRE	CONDUIT	MAX AMP RATING	HEX #	WIRE	CONDUIT	MAX AMP RATING
1	(3)#12 + (1)#12G.	3/4"	20	16	(4)#1/0 + (1)#6G.	2"	150
2	(4)#12 + (1)#12G.	3/4"	20	17	(3)#2/0 + (1)#6G.	2"	175
3	(3)#10 + (1)#10G.	3/4"	30	18	(4)#2/0 + (1)#6G.	2"	175
4	(4)#10 + (1)#10G.	3/4"	30	19	(3)#3/0 + (1)#6G.	2-1/2"	200
5	(3)#8 + (1)#10G.	3/4"	50	20	(4)#3/0 + (1)#6G.	2-1/2"	200
6	(4)#8 + (1)#10G.	3/4"	50	21	(3)#4/0 + (1)#4G.	2-1/2"	230
7	(3)#6 + (1)#8G.	1"	65	22	(4)#4/0 + (1)#4G.	2-1/2"	230
8	(4)#6 + (1)#8G.	1"	65	23	(3)250KCMIL + (1)#4G.	2-1/2"	255
9	(3)#4 + (1)#8G.	1-1/4"	85	24	(4)250 KCMIL + (1)#4G.	2-1/2"	255
10	(4)#4 + (1)#8G.	1-1/4"	85	25	(3)300 KCMIL + (1)#4G.	3"	285
11	(3)#3 + (1)#8G.	1-1/4"	100	26	(4)300 KCMIL + (1)#4G.	3"	285
12	(4)#3 + (1)#8G.	1-1/4"	100	27	(3)350 KCMIL + (1)#4G.	3"	300
13	(3)#1 + (1)#6G.	1-1/2"	130	28	(4)350 KCMIL + (1)#4G.	3"	300
14	(4)#1 + (1)#6G.	1-1/2"	130	29	(3)600 KCMIL + (1)#3G.	4"	400
15	(3)#1/0 + (1)#6G.	2"	150	30	(4)600 KCMIL + (1)#3G.	4"	400

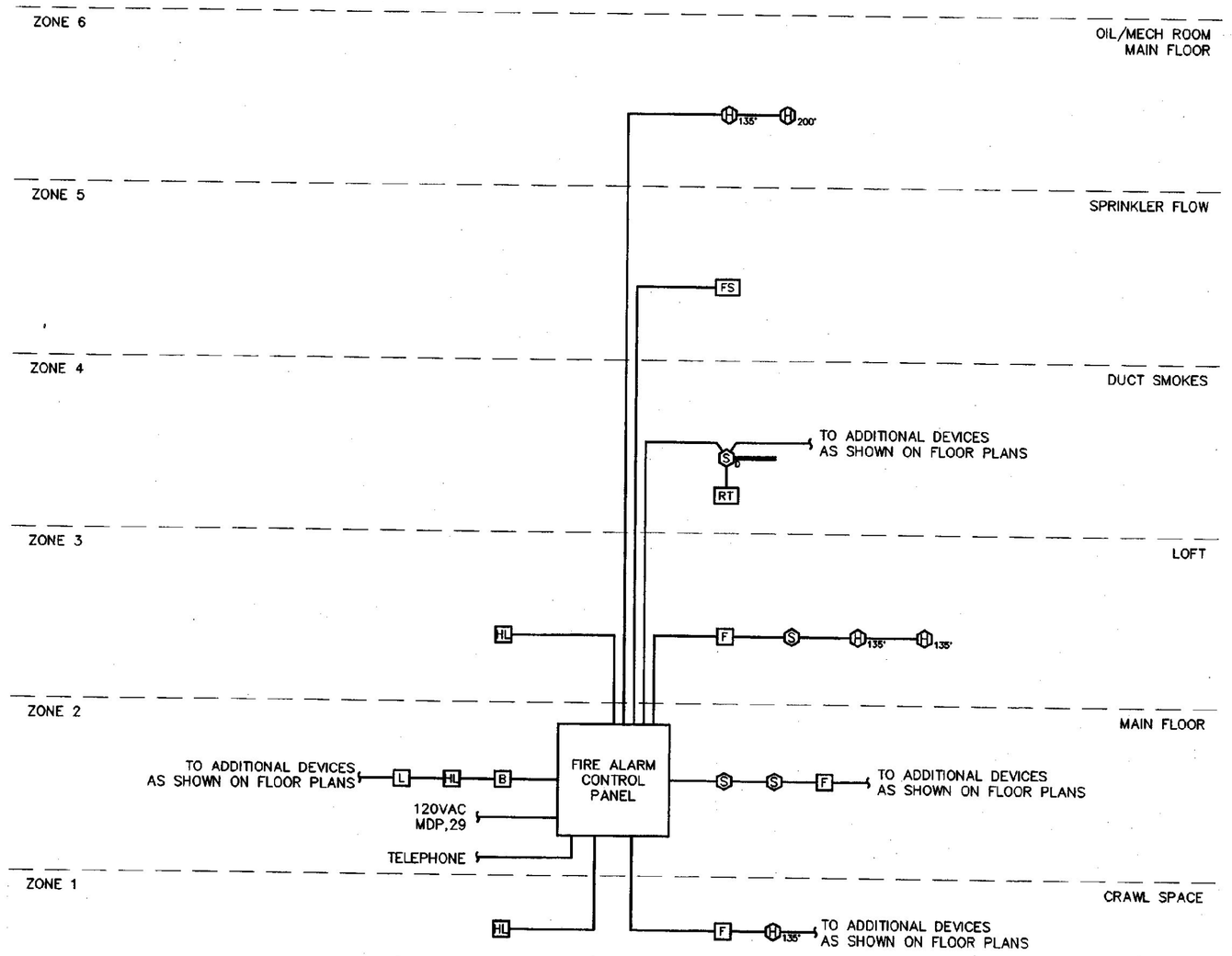

FIRE ALARM RISER DIAGRAM

NOTES:

1. FIRE ALARM RISER IS DIAGRAMMATIC AND PARTIAL IN CONTENT AND IS INTENDED TO ILLUSTRATE THE METHOD OF SYSTEM DISTRIBUTION ONLY.
2. REFER TO FLOOR PLANS FOR EXACT NUMBERS AND LOCATIONS OF DEVICES.
3. INSTALLATION OF DEVICES AND WIRING SHALL BE PER MANUFACTURERS INSTALLATION INSTRUCTIONS. ALL WIRING SHALL BE IN CONDUIT.
4. REFER TO ELECTRICAL SPECIFICATIONS FOR ADDITIONAL INFORMATION.
5. REFER TO NATIONAL ELECTRIC CODE (NEC) FOR REQUIREMENTS OF POWER LIMITED AND NON-POWER LIMITED WIRING.

STATE OF VERMONT
BRIAN P. BROWNING
No. 7013
PROFESSIONAL ENGINEER

No.	DATE	REVISION

DUNCAN • WISNIEWSKI ARCHITECTURE
256 SOUTH CHAMPLAIN STREET, BURLINGTON, VERMONT 05401 (802) 864-6693

Hallam Associates
60 Parrell Street, Suite 300
So. Burlington, Vermont 05403
(802) 658-4891

WILLISTON INFORMATION CENTER
189 SOUTHBOUND
STATE PROJECT # IM-BLDG (4)

ONE-LINE AND RISER DIAGRAMS

DRAWN:	PROJ.No:
KES	10215
CHECKED:	DATE:
BPB	JAN 16, 2001

E-6sb

G:\Drawings\10215001\E-6sb.dwg Monday, January 15, 2001 5:52:26 pm lcs

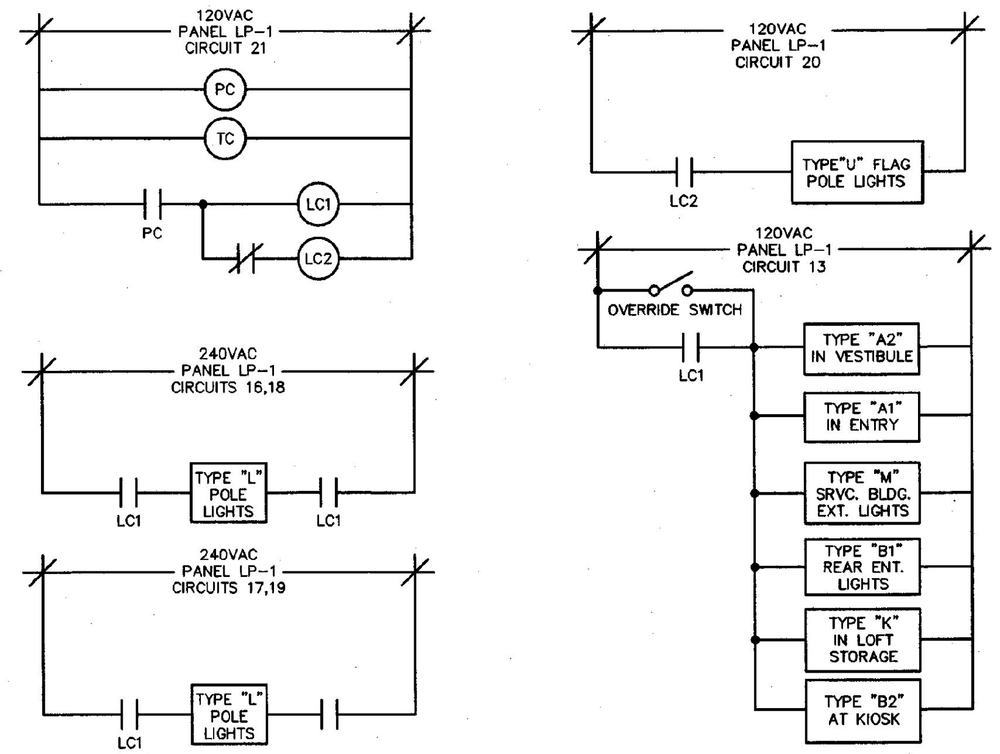

SITE LIGHTING CONTROL DIAGRAM

SCALE: NONE

NOTES:

1. REFER TO SPECIFICATIONS FOR PHOTOCELL, TIME CLOCK, AND LIGHTING CONTACTOR REQUIREMENTS.

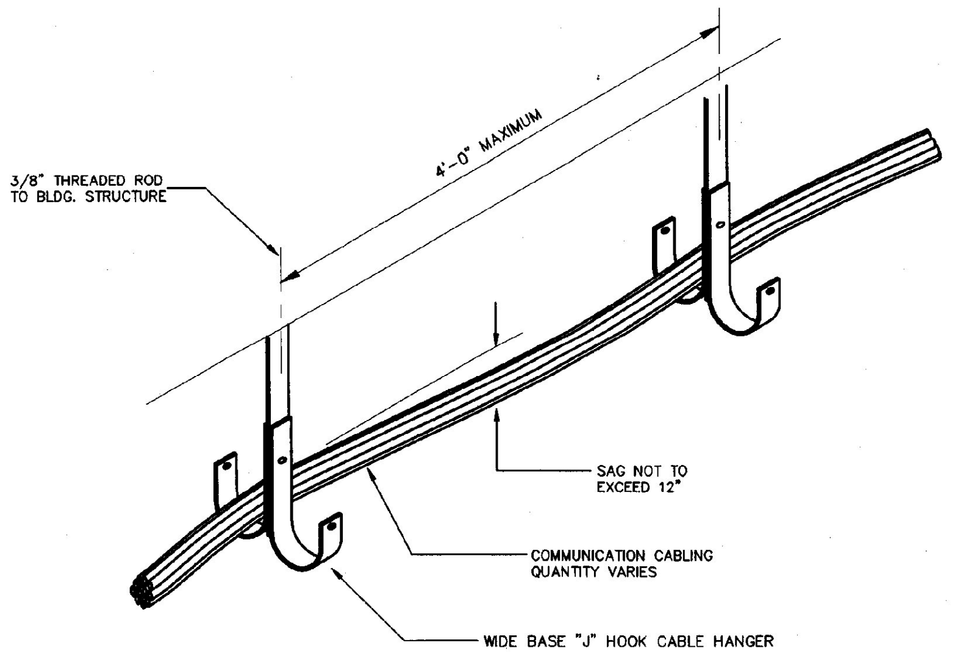

CABLE MANAGEMENT DETAIL

SCALE: NONE

1. WHEN MAKING BENDS OR CORNERS MAINTAIN A MAXIMUM BEND RADIUS PER EIA/TIA STANDARDS AND MANUFACTURERS RECOMMENDATIONS.
2. INSTALL MULTIPLE CLOSELY SPACED CABLE HANGERS ON CORNERS TO MAINTAIN PROPER BENDING RADII.
3. CABLING SHALL BE ROUTED TO AVOID ALL SOURCES OF EMI OR AMBIENT ELECTRICAL NOISE WHENEVER POSSIBLE. MINIMUM DISTANCES FROM FROM EMI SOURCES ARE AS FOLLOWS:
   - FIVE (5) INCHES FROM UNSHIELDED POWER LINES OF < 2 KVA.
   - TWELVE (12) INCHES FROM UNSHIELDED POWER LINES OF 2 TO 5 KVA.
   - TWENTY FOUR (24) INCHES FROM UNSHIELDED POWER LINES OF > 5 KVA.
   - TWELVE (12) INCHES FROM HIGH VOLTAGE LIGHTING INCLUDING FLUORESCENT.
   - FORTY (40) INCHES FROM TRANSFORMERS AND ELECTRIC MOTORS.
   - NO CABLE RUNS SHOULD BE PARALLEL WITH AC LINES.
4. FURNISH AND INSTALL 4" CONDUIT SLEEVES AT ALL RATED WALL PENETRATIONS. MAINTAIN 40% FILL RATIO TO ALLOW FOR FUTURE CABLING. SEAL ALL CONDUIT SLEEVES WITH A UL RATED PILLOW TYPE FIRE SEAL.

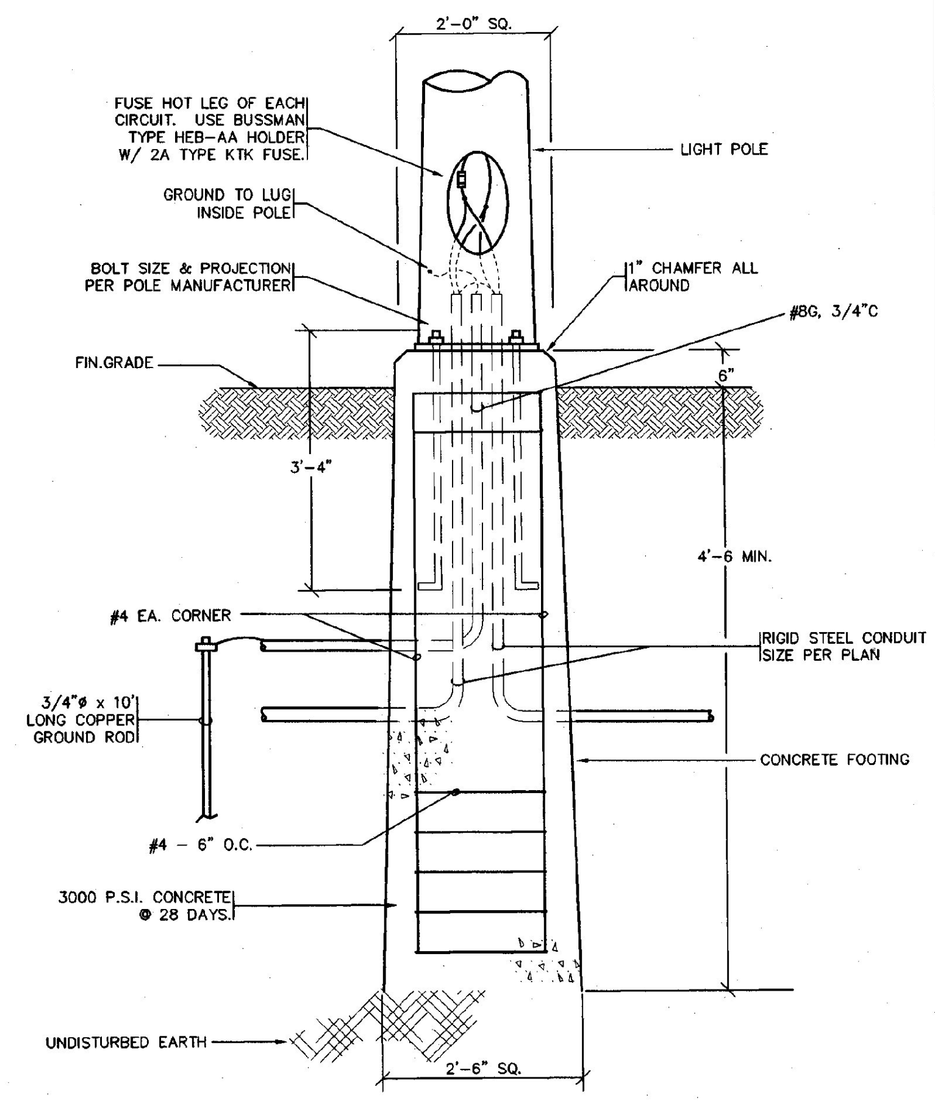

LIGHT POLE BASE DETAIL

NO SCALE

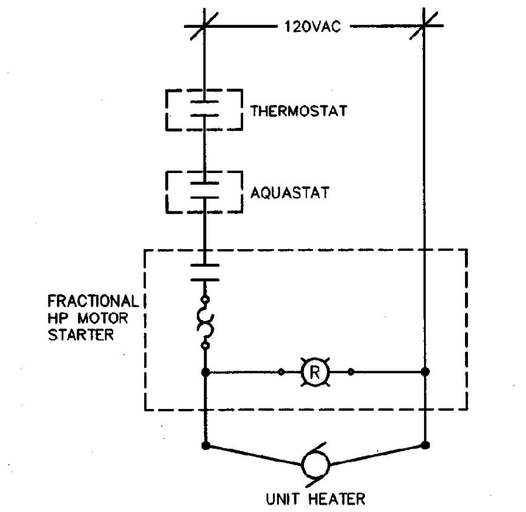

THERMOSTAT/AQUASTAT CONTROL DIAGRAM

SCALE: NONE

NOTES:

1. THERMOSTAT AND AQUASTAT SHALL BE PROVIDED BY MECHANICAL CONTRACTOR. MECHANICAL CONTRACTOR TO INSTALL AQUASTAT AND ELECTRICAL CONTRACTOR TO INSTALL THERMOSTAT AT LOCATION SHOWN ON DRAWINGS.

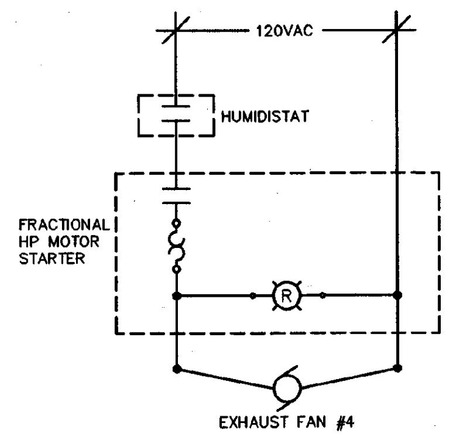

HUMIDISTAT CONTROL DIAGRAM

SCALE: NONE

NOTES:

1. HUMIDISTAT SHALL BE PROVIDED BY MECHANICAL CONTRACTOR AND INSTALLED BY ELECTRICAL CONTRACTOR.

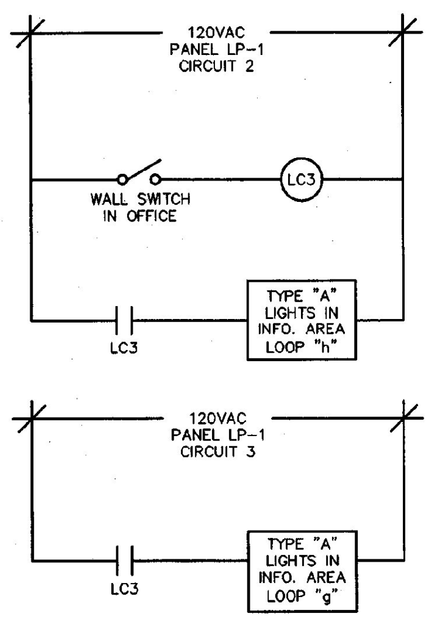

MAIN FLOOR LIGHTING CONTROL DIAGRAM

SCALE: NONE

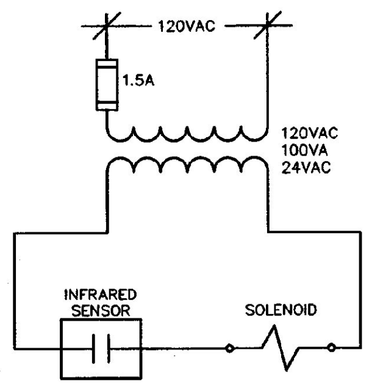

TYPICAL URINAL/WATER CLOSET WIRING DIAGRAM

SCALE: NONE

NOTES:

1. INFRARED SENSOR AND SOLENOID SHALL BE PROVIDED BY MECHANICAL CONTRACTOR AND INSTALLED BY ELECTRICAL CONTRACTOR.
2. PROVIDE AN 8"x 8"x 6" HINGED ENCLOSURE FOR TRANSFORMER AND FUSE BLOCK.

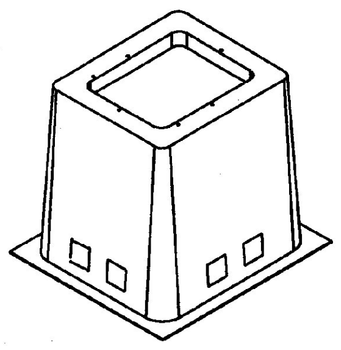

ISOMETRIC VIEW

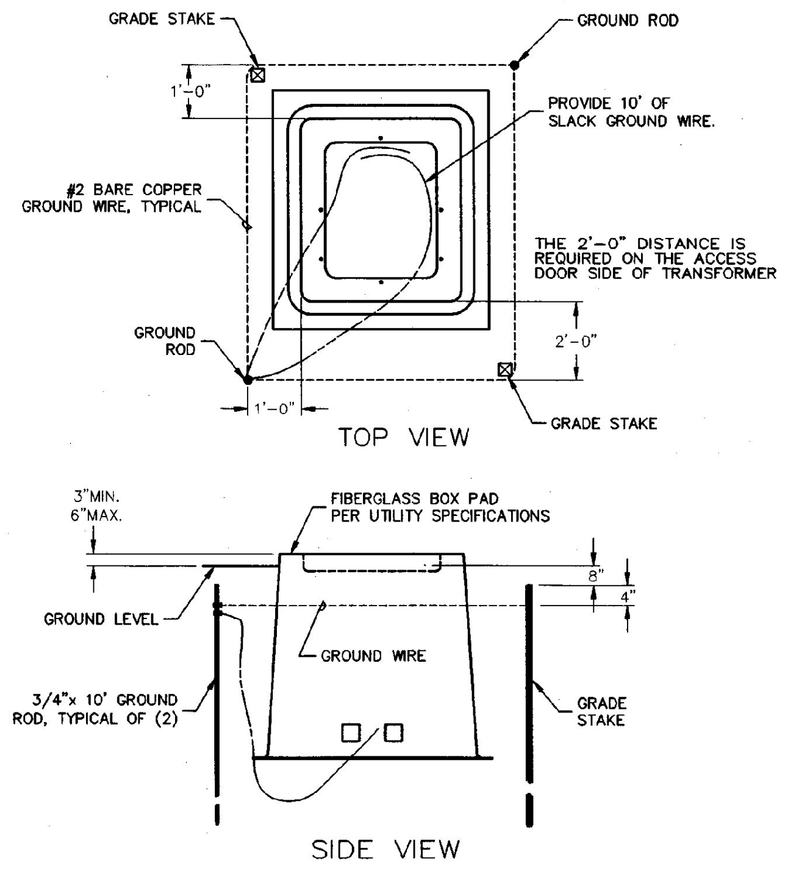

TRANSFORMER PAD DETAIL

NO SCALE

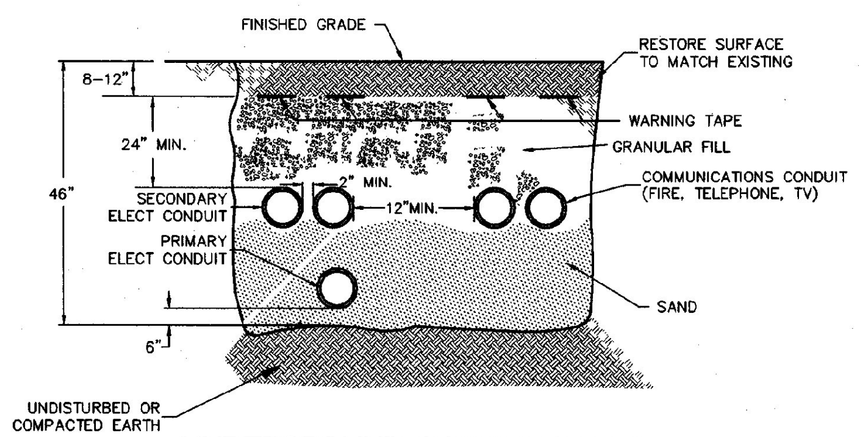

UNDERGROUND CONDUIT DETAIL

NO SCALE

GENERAL NOTES:

1. ELECTRIC UTILITY POWER ENGINEER MUST INSPECT ALL UNDERGROUND CONDUIT PRIOR TO BACKFILLING.
2. WHEN BURIAL DEPTH IS LESS THAN 75% OF THE DEPTH SHOWN, RIGID STEEL CONDUIT OR CONCRETE ENCASEMENT MUST BE USED.
3. WHERE CONDUITS RUN UNDER ROADWAY OR PARKING AREA CONCRETE ENCASEMENT MUST BE USED.

STATE OF VERMONT
BRIAN P. BROWNING
No. 7013
PROFESSIONAL ENGINEER

No.	DATE	REVISION

DUNCAN • WISNIEWSKI ARCHITECTURE
255 SOUTH CHAMPLAIN STREET, BURLINGTON, VERMONT 05401 (802) 864-6668

Hallam Associates
80 Farrell Street, Suite 300
So. Burlington, Vermont 05403
(802) 658-4681

WILLISTON INFORMATION CENTER
I89 SOUTHBOUND
STATE PROJECT # IM-BLDG (4)

ELECTRICAL DETAILS

DRAWN:	PROJ.No:
KES	10215
CHECKED:	DATE:
BPB	JAN 16, 2001

E-7sb

G:\Drawings\10215001\E-7sb.dwg Monday, January 15, 2001 5:53:23 pm lcs

PANEL SCHEDULE NOTES: (APPLIES TO ALL PANELS)

1. THE AVAILABLE INTERRUPTING CURRENT SHOWN ON EACH PANELBOARD SCHEDULE IS THE MAXIMUM CALCULATED AVAILABLE FAULT CURRENT AT THE PANEL.

2. ALL EQUIPMENT, MAIN BREAKER (IF LISTED) AND ALL BRANCH BREAKERS SHALL BE FULLY RATED WITH AN AIC RATING THAT MEETS OR EXCEEDS THE FAULT CURRENT SHOWN. SERIES RATED BREAKERS ARE NOT ACCEPTABLE.

PANEL PP-1

240V VOLTS, 3 - PHASE, 3 - WIRE

LOCATION: LOFT
MOUNTING: SURFACE
TYPE: NQOD

150A-3P MAIN BREAKER 14,918 AIC
BR. BREAKERS - BOLTED 14,918 AIC TOTAL LOAD: 39.5KVA
REMARKS: PROVIDE WARNING LABEL ON PANEL INDICATING THE FOLLOWING: "PANEL CONTAINS MANUFACTURED PHASE, ONLY CONNECT 230V 3Ø EQUIPMENT TO THIS PANEL"

CIRC. NO	SIZE	DESCRIPTION	KVA	PH	CIRC. NO	SIZE	DESCRIPTION	KVA
1	50A			A	2	20A		
3		SUPPLY FAN SF-1 - MECH. LOFT	11.1	B	4		RETURN FAN RF-1 - MECH. LOFT	3.8
5	3P			C	6	3P		
7	45A			A	8	45A		
9		CONDENSING UNIT #1 - OUTSIDE	12.3	B	10		CONDENSING UNIT #2 - OUTSIDE	12.3
11	3P			C	12	3P		
13				A	14			
15				B	16			
17				C	18			
19				A	20			
21				B	22			
23				C	24			
25				A	26			
27				B	28			
29				C	30			

LIGHT FIXTURE SCHEDULE

TYPE	DESCRIPTION	MOUNTING	LAMPS	LENS	MANUFACTURER	CATALOG NUMBER	ALTERNATE MANUFACTURERS	NOTES (SEE BELOW)
A	9" ROUND LINEAR DIRECT FIXTURE	END	(3) 3' T8 25W	ALUMINUM BAFFLE	ALERA	IT9-G-23-AB-MB-TEM 3EB8-120	PEERLESS	NOTE 1
A1	9" ROUND LINEAR DIRECT/ INDIRECT FIXTURE	END/WALL	(3) 4' T8 32W	ALUMINUM BAFFLE DIRECT CLEAR PRISMATIC ACRYLIC INDIRECT	ALERA	IT9-X-2XX-AB/CPA-MB-XX EB8-120	PEERLESS	REFER TO DRAWING FOR LENGTH. (2) DIRECT/(1) INDIRECT LAMPS, NOTE 1
A2	9" ROUND LINEAR DIRECT/INDIRECT FIXTURE	WALL	(4) 4' T8 32W	ALUMINUM BAFFLE DIRECT CLEAR PRISMATIC ACRYLIC INDIRECT	ALERA	IT9-R-2XX-AB/CPA-MB-WM-EB8-120	PEERLESS	REFER TO DRAWING FOR LENGTH. (2) DIRECT/(2) INDIRECT LAMPS, NOTE 1
A3	4" ROUND LINEAR DIRECT FIXTURE	SURFACE	(1) 4' T8 32W	CLEAR PRISMATIC ACRYLIC	ALERA	IT4-A-24-CPA-MB-WM-EB8-120	PEERLESS	
B	8" SURFACE DRUM FIXTURE	SURFACE	(2) 26W PL	OPEN WITH CLEAR ALZAK REFLECTOR	PRESCOLITE	CFS9226EBCR	RUUD	SEE ARCHITECTURAL DETAILS A31 FOR MOUNTING COORDINATION WITH TRUSS
B1	6" LIGHT BOX FLUORESCENT DOWN LIGHT FIXTURE	RECESSED	(1) 26W PL	BLACK BAFFLE W/ FRESNEL GLASS AND REFLECTOR	PRESCOLITE	TBX1C26-TL85	RUUD	
B2	8" ROUND LENSED DOWNLIGHT	RECESSED	(2) 13W PL	REGRESSED FRESNEL LENS	PRESCOLITE	CF1013RDEB-90M71TLG	RUUD	FIXTURE TO HAVE 0' BALLAST
B3	8" OPEN DOWN LIGHT FIXTURE	RECESSED	(1) 26W PL	OPEN WITH CLEAR ALZAK REFLECTOR	PRESCOLITE	CFQ826EB-STF802	RUUD	
C	LOW VOLTAGE EXTRUDED SQUARE TRACK LIGHT W/ INTERNAL TRANSFORMER	MONOPOINT	(1) 50W MR16	CLEAR LENS W/ GLARE REDUCING BLACK BAFFLE	RUUD	TES1L-BK	PRESCOLITE	PROVIDE WITH MONOPOINT FEED
C1	LOW VOLTAGE EXTRUDED SQUARE TRACK LIGHT W/ INTERNAL TRANSFORMER	TRACK	(1) 50W MR16	CLEAR LENS W/ GLARE REDUCING BLACK BAFFLE	RUUD	TES1L-BK WITH T1TXBK TRACK	PRESCOLITE	REFER TO DWG FOR LENGTH, PROVIDE A 6' CORD & PLUG FOR TRACK POWER
E	EXIT LIGHT - SINGLE SIDED WITH NICKEL CADMIUM BATTERY	UNIVERSAL	LED 3.8W	RED STENCIL, ARROWS AS INDICATED ON DRAWINGS	PRESCOLITE	LEDR1NBB	DYNARY	
F	4-3/4" ROUND FIXTURE W/ GUARD	SURFACE	(1) 20W G4, 12V	GLASS SPREAD LENS	BEGA	1123	NONE	
G	4' SHOWCASE FIXTURE	SURFACE	(1) 3' T8 25W	SHIELDED ALUMINUM	PANALITE	SC6203-BL	NONE	
G1	4' SHOWCASE FIXTURE	SURFACE	(1) 3' T8 25W	SHIELDED ALUMINUM	PANALITE	SC4203-BL	NONE	
H	4' HEAVY DUTY NARROW CHANNEL FIXTURE W/ WIRE GUARD	SURFACE	(1) 4' T8 32W	WIRE GUARD	COLUMBIA	CH4-132-EB8120-CHWG4	LITHONIA	
K	4' INDUSTRIAL FIXTURE	CHAIN HUNG	(2) 4' T8 32W	OPEN	COLUMBIA	KL4-232-EB8120	LITHONIA	NOTE 1
L	PARKING LOT FIXTURE	25' POLE	250W MH	TEMPERED GLASS	LUMEC	250MH-OPC-SG3-240V 1A-SSM8-PAL-FS	NONE	
M	CIRCULAR WALL MOUNT FIXTURE	WALL	(1) 13W PL	POLYCARBONATE LENS	RUUD	CE8213-1	COLUMBIA	
N	4' WRAPAROUND FIXTURE	SURFACE	(2) 4' T8 32W	CLEAR ACRYLIC PRISMATIC DIFFUSER	COLUMBIA	WC4-232-EB8-120	LITHONIA	NOTE 1
P	4' WALL MOUNT FIXTURE	WALL	(2) 4' T8 32W	WHITE ACRYLIC DIFFUSER	COLUMBIA	W4-232-EB8-120	LITHONIA	
Q	4' UNDER CABINET FIXTURE	SURFACE	(1) 4' T8 32W	OPAL ACRYLIC DIFFUSER	ROBERT GROUP	UC-32-SSB-T8	COLUMBIA	
Q1	2' UNDER CABINET FIXTURE	SURFACE	(1) 2' T8 17W	OPAL ACRYLIC DIFFUSER	ROBERT GROUP	UC-17-SSB-T8	COLUMBIA	
T	LOW VOLTAGE TRACK FIXTURE	MONOPOINT	(1) 50W MR16	OPEN	RUUD	TLB07-BK	PRESCOLITE	PROVIDE WITH MONOPOINT FEED AND REMOTE TRANSFORMER
U	HID WELL LIGHT WITH ROUND DIRECTIONAL GRILL AND BURIED BALLAST BOX	RECESSED	70W MH	FULLY GASKETED TEMPERED GLASS	GREENLEE	101-A-70-MH-BF-120V-RDB	HADCO	

NOTES:
1. PROVIDE EMERGENCY BATTERY PACK WITHIN FIXTURES INDICATED ON DRAWINGS.

PANEL LP-1

208/120V VOLTS, 3 - PHASE, 4 - WIRE
225A MAIN LUG ONLY

LOCATION: WORK AREA
MOUNTING: SURFACE
TYPE: NQOD

BR. BREAKERS - BOLTED 20,364 AIC TOTAL LOAD: 29.9 KVA
REMARKS:

CIRC. NO	SIZE	DESCRIPTION	KVA	PH	CIRC. NO	SIZE	DESCRIPTION	KVA
1	20A-1P	LIGHTING - ENTRY / VEND. / RR	0.6	A	2	20A-1P	LIGHTING - INFORMATION MAIN	0.9
3	20A-1P	LIGHTING - INFORMATION MAIN	0.9	B	4	20A-1P	LIGHTING - INFORMATION MAIN	1.3
5	20A-1P	LIGHTING - INFORMATION MAIN	1.0	C	6	20A-1P	LIGHTING - WOMENS / JANITOR / STAFF	1.0
7	20A-1P	LIGHTING - FLEX / HALL / MECH./ SERVICE	1.3	A	8	20A-1P	LIGHTING - OFFICE/ MENS	1.0
9	20A-1P	SPARE		B	10	20A-1P	SPARE	
11	20A-1P	LIGHTING - LOFT	0.4	C	12	20A-1P	LIGHTING - CRAWL SPACE	0.4
13	20A-1P	LIGHTING - VEST./EXT./ENTRY NITE LITES/ LOFT	1.1	A	14	20A-1P	LIGHTING - NIGHT LIGHTS	0.4
15	20A-1P	LIGHTING - DISPLAY	0.9	B	16	20A / 1P	LIGHTING - SITE	2.3
17	20A / 1P	LIGHTING - SITE	2.8	C	18			
19				A	20	20A-1P	LIGHTING - WALL LIGHTS EXT.	0.2
21	20A-1P	LIGHTING - CONTROLS	0.1	B	22	20A-1P	LIGHTING & RECEPT. - SERVICE BLDG.	1.2
23	20A-1P	RECEPTACLE - PEOPLE COUNTER	0.4	C	24	20A-1P	RECEPTACLE - SECURITY EQUIPMENT	0.4
25	20A-1P	SPARE		A	26	20A-1P	RECEPTACLE - ENTRY, WC-1, WC-2, EF-2	1.2
27	20A-1P	RECEPTACLE - INFORMATION	0.8	B	28	20A-1P	RECEPTACLE - INFORMATION	1.0
29	20A-1P	RECEPTACLE - INFORMATION	1.0	C	30	20A-1P	RECEPTACLE - OFFICE	0.8
31	20A-1P	RECEPTACLE - HALL 2/ SERVICE/ MECH/ OIL	1.0	A	32	20A-1P	RECEPTACLE - MENS/ FLEX	1.4
33	20A-1P	RECEPTACLE - STAFF	0.8	B	34	20A-1P	RECEPTACLE - WOMEN'S/ JANITOR	1.2
35	20A-1P	RECEPTACLE - STAFF	0.4	C	36	20A-1P	RECEPTACLE - EXTERIOR	1.2
37	20A-1P	RECEPTACLE - ELECTRIC GARAGE DOOR	0.7	A	38	20A-1P	SPARE	
39	20A-1P	SPARE		B	40	20A-1P	SPARE	
41	20A-1P	SPARE		C	42	20A-1P	SPARE	

PANEL MDP

120/240V VOLTS, 1 - PHASE, 3 - WIRE

LOCATION: WORK AREA
MOUNTING: SURFACE
TYPE: NQOD

500A 2P MAIN BREAKER 21,872 AIC
BR. BREAKERS - BOLTED 21,872 AIC TOTAL LOAD: 118.3 KVA
REMARKS:

CIRC. NO	SIZE	DESCRIPTION	KVA	PH	CIRC. NO	SIZE	DESCRIPTION	KVA
1	20A-1P	B-1, B-2, B-3 - MECH. ROOM	1.4	A	2	20A-1P	HWRP-1 - MECH. ROOM	0.8
3	20A-1P	P-5, P-6 - MECH. ROOM	1.3	B	4	20A-1P	UH's, P-4 - MECH. ROOM	0.9
5	25A / 2P	P-1, P-3 - MECH. ROOM	3.7	C	6	20A / 2P	P-2 - MECH. ROOM	1.6
7				A	8			
9	20A / 2P	EF-1 - MECH. LOFT	1.6	B	10	50A / 2P	DWBP-1 - MECH. ROOM	6.7
11				C	12			
13	150A / 2P	PHASE CONVERTER	39.5	A	14	20A-1P	J-BOX / CONTROLS (MAIN, LOFT, CRAWL)	1.5
15				B	16	20A-1P	UH's - CRAWL SPACE	1.0
17	20A-1P	SP-1 - CRAWL SPACE	0.8	C	18	20A-1P	EF-2, 3 & 5; UH-2, DAMPERS	1.4
19	20A-1P	EF-4, RCH-1 - CRAWL SPACE	0.9	A	20	20A-1P	RECEPTACLE - LOFT	1.2
21	20A-1P	RECEPTACLE - CRAWL SPACE	1.0	B	22	20A-1P	SPARE	
23	20A-1P	RECEPTACLE - VENDING	1.0	C	24	20A-1P	RECEPTACLE - VENDING	0.9
25	20A-1P	RECEPTACLE - HALL 1	0.8	A	26	175A / 2P	PANEL LP-1	29.9
27	20A-1P	RECEPTACLE - COFFEE MAKER	1.5	B	28			
29	20A-1P	FACP - MAIN	0.5	C	30	20A-1P	HAND DRYER - WC1	2.3
31	20A-1P	HAND DRYER - WC2	2.3	A	32	20A-1P	HAND DRYER - MEN'S	2.3
33	20A-1P	HAND DRYER - MEN'S	2.3	B	34	20A-1P	HAND DRYER - FLEX	2.3
35	20A-1P	HAND DRYER - FLEX	2.3	C	36	20A-1P	HAND DRYER - WOMEN'S	2.3
37	20A-1P	HAND DRYER - WOMEN'S	2.3	A	38	20A-1P	SPARE	
39	20A-1P	SPARE		B	40	20A-1P	SPARE	
41	20A-1P	SPARE		C	42	20A-1P	SPARE	

STATE OF VERMONT
BRIAN P. BROWNING
No. 7012
PROFESSIONAL ENGINEER

No.	DATE	REVISION

DUNCAN • WISNIEWSKI ARCHITECTURE
255 SOUTH CHAMPLAIN STREET, BURLINGTON, VERMONT 05401 (802) 864-6693

Hallam Associates
80 Parrell Street, Suite 300
South Burlington, Vermont 05403
(802) 652-4391

WILLISTON INFORMATION CENTER
189 SOUTHBOUND
STATE PROJECT # IM-BLDG (4)

ELECTRICAL SCHEDULES

DRAWN:	PROJ.No:
KES	10215
CHECKED:	DATE:
BPB	JAN 16, 2001

E-8sb

G:\Drawings\10215001\E-8sb.dwg Monday, January 15, 2001 5:54:42 pm tcs

State of Vermont

Water Supply & Wastewater Permit

LAWS/REGULATIONS INVOLVED
ENVIRONMENTAL PROTECTION RULES

Chapter 4, Public Buildings
Appendix A, Design Guidelines

CASE NO. WW-4-0136
APPLICANT State of Vermont
ADDRESS Agency of Transportation
133 State Street
Montpelier, VT 05602

This project, consisting of extending the municipal sewer to be utilized by the northbound and southbound rest areas along Interstate 89 located in the Town of Williston, Vermont is hereby approved under the requirements of the regulations named above, subject to the following conditions.

GENERAL

(1) This permit does not constitute Act 250 approval (Title V.S.A., Chapter 151). The permittee is hereby reminded to procure all relevant State and local permits prior to proceeding with this project.

(2) The project shall be completed as shown on the plans Project No. R88825 sheet 3 of 7 dated April 1989; sheet 4 of 7 dated April 1989; sheet 5 of 7 dated April 7, 1989; sheet 6 of 7 dated April 1989; and sheet 7 of 7 dated April 1989 prepared by DuBois & King, Inc. and in Section 628 - Sanitary Sewer Systems (construction specifications) and which have been stamped "approved" by the Division of Protection. The project shall not deviate from the approved plans without prior written approval from the Division of Protection.

(3) A copy of the approved plans and this Permit shall remain on the project during all phases of construction and, upon request, shall be made available for inspection by State or local personnel.

(4) By acceptance of this permit, the permittee agrees to allow representatives of the State of Vermont access to the property covered by the permit, at reasonable times, for the purpose of ascertaining compliance with Vermont environmental/health statutes and regulations, and with this permit.

SEWAGE DISPOSAL

(5) The project is approved for wastewater disposal by connection to the Essex Junction municipal sewer system. No other method of wastewater disposal shall be allowed without prior review and approval by the Division of Protection, and such approval will not be granted unless the proposal conforms to the applicable laws and regulations.

DUBOIS & KING, INC.
FILE #_____
SUBJ_____

JUL 17 1989

REFD TO: BDL/CKG
NOTED: [illegible]

(6) A professional engineer, registered in the State of Vermont, is to generally supervise the construction of the sanitary sewer line extensions and, upon completion of construction, the supervising engineer is to submit to the Protection Division a written certification stating all construction has been completed in accordance with the stamped approved plans. The engineer's certification is to be submitted to the Division prior to the occupancy of any unit and the certification shall include, but not be limited to, the numerical results of all leakage testing performed on each segment of the sanitary sewer extension and all manholes, as described in Appendix A, of the Environmental Protection Rules.

Timothy J. Burke, Commissioner
Department of Environmental
Conservation

By Ernest P. Christianson
Ernest P. Christianson
Regional Engineer

Dated at Essex Jct., Vermont this 11th day of July 1989.

cc: Donald Robisky
Village of Essex Junction Planning Commission
Town of Williston Planning Commision
Dept. of Health
Dept. of Labor and Industry
DuBois and King, Inc.

INDEX OF SHEETS

1. TITLE SHEET
2. QUANTITY SHEET
3.-6. SEWER PLAN AND PROFILE
7. DETAILS
8. BORING LOGS

STATE OF VERMONT
AGENCY OF TRANSPORTATION

PROPOSED IMPROVEMENT

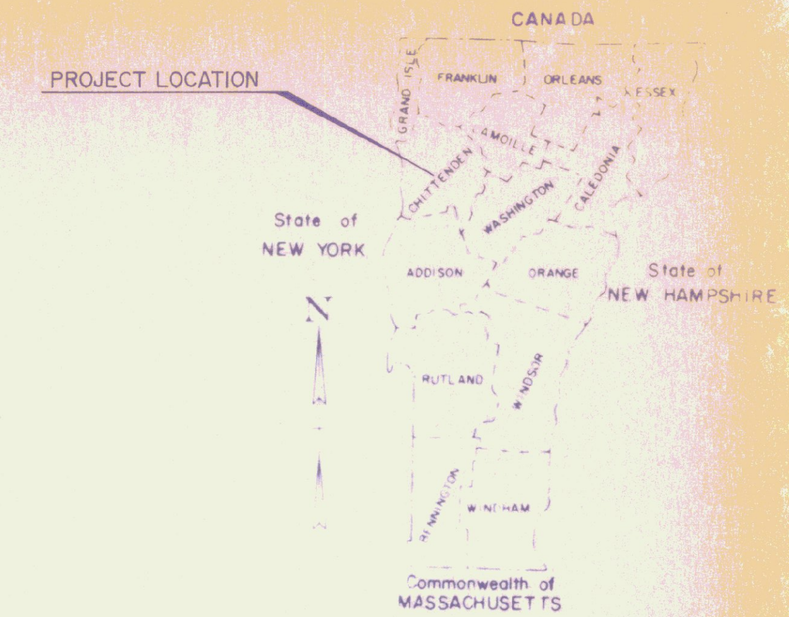

TOWN OF WILLISTON
COUNTY OF CHITTENDEN
INTERSTATE I - 89
SEWER EXTENSION TO
SERVICE WILLISTON REST AREAS

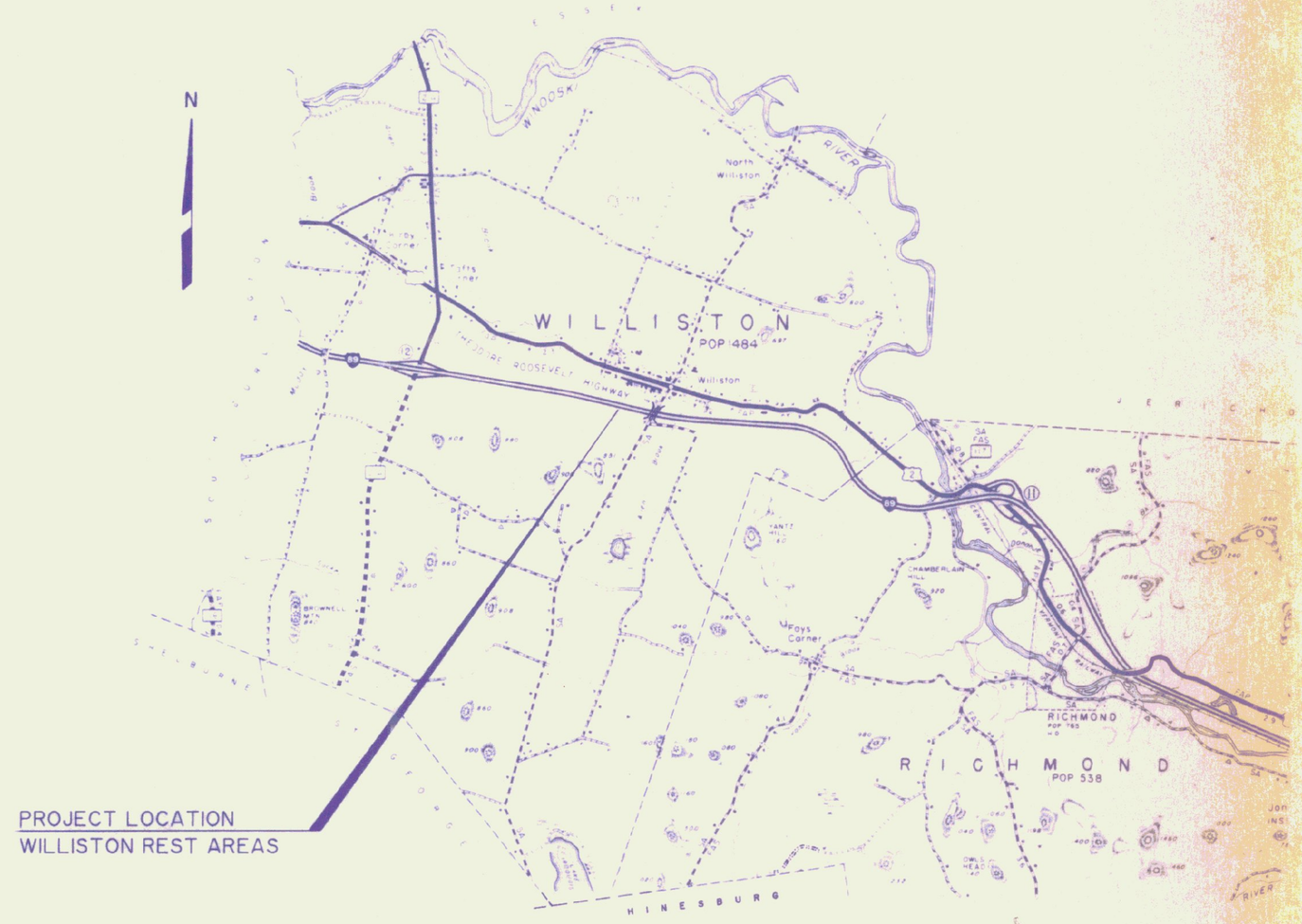

JAN 29 1992

LEGEND

UNDERGROUND WATER — W —
UNDERGROUND TELEPHONE — TEL —
UNDERGROUND ELECTRIC — E —
LIGHT POLE
HYDRANT
WATER VALVE BOX
CATCH BASIN
PROPERTY LINE
CONCRETE MONUMENT FOUND
BORING LOCATION W/ DESIGNATION R-19
8" GRAVITY SEWER 8" SEWER
PIPE IN STEEL CASING
MANHOLE
COUNTY LINE
TOWN LINE
LIMITS OF ACCESS
POINT OF ACCESS
FENCE LINE
STONE WALL
TRAVELED WAY
GUARD RAIL
RAILROAD
SURVEY LINE
CULVERT
POWER POLE
TELEPHONE POLE
TREES
CONTROL OF ACCESS
PROPERTY LINE
R O W TAKING LINE
SLOPE RIGHTS SR
TOP OF CUT
TOE OF SLOPE

DATUM
VERTICAL
HORIZONTAL

STATE OF VERMONT
STANFORD DEXTER LEARNING
NO. 4800
REGISTERED
PROFESSIONAL ENGINEER

DuBois & King inc.
engineering planning management development

THESE PLANS ARE SUBJECT TO SUCH ENGINEERING CHANGES AS MAY BE REQUIRED BY THE FEDERAL HIGHWAY ADMINISTRATION OR THE CHIEF ENGINEER.

CONSTRUCTION IS TO BE CARRIED ON IN ACCORDANCE WITH THESE PLANS AND THE STANDARD SPECIFICATIONS FOR CONSTRUCTION DATED 1986, AS APPROVED BY THE FEDERAL HIGHWAY ADMINISTRATION ON NOVEMBER 21, 1985 FOR USE ON THIS PROJECT, INCLUDING ALL SUBSEQUENT REVISIONS AND SUCH REVISED SPECIFICATIONS AND SPECIAL PROVISIONS AS ARE INCORPORATED IN THESE PLANS.

SUBMITTED BY ORDER OF THE STATE TRANSPORTATION BOARD
APPROVED _____ DATE _____
CHIEF ENGINEER

DEPARTMENT OF TRANSPORTATION
FEDERAL HIGHWAY ADMINISTRATION
APPROVED _____ DATE _____
DIVISION ADMINISTRATOR

PROJECT Nº IR089-2(13)
SHEET 1 OF 8 SHEETS

DEK DWG NO. 7034

QUANTITY SHEET

STATE OF VERMONT
AGENCY OF TRANSPORTATION

APPROXIMATE SUMMARY OF QUANTITIES

R.O.W.			UTILITY	BRIDGE	ROADWAY	QUANTITIES GRAND TOTAL	UNIT	ITEMS	ITEM NO.	ROUNDING
						10*	CY	MUCK EXCAVATION	203.20	
						70	CY	SAND BORROW	203.31	
						4050	CY	TRENCH EXCAVATION OF EARTH	204.20	
						200	CY	GRANNULAR BACK FILL FOR STRUCTURES	204.30	
						200	CY	SUBBASE OF GRAVEL	301.15	
						5*	CY	CONCRETE, CLASS C	501.30	
						16	EACH	PRC MANHOLES WITH C.I. COVER	604.20	
						30	LF	REMOVING AND RESETTING FENCE	620.50	
						205	LF	8" D.I. SEWER PIPE W/MECHANICAL JOINTS	628.28	
						1	LS	TRANSFER TO NEW SYSTEM - SANITARY SEWER	628.42	
						3705	LF	8" PVC SEWER PIPE	628.35	
						1	LS	MOBILIZATION	635.10	
						205	LF	JACKING OR BORING 20" WELDED STEEL PIPE	643.20	
						60*	LB	SEED	651.15	
						500*	LB	FERTILIZER	651.18	
						2*	TON	HAY MULCH	651.25	
						250*	CY	TOPSOIL	651.35	

DETAILED SUMMARY OF QUANTITIES

QUANTITIES	UNIT	ITEMS

DETAILED SUMMARY OF QUANTITIES

QUANTITIES	UNIT	ITEMS

* INDETERMINATE QUANTITY

STATIONS		PAVEMENT WIDTHS			EQUATIONS		FEET	MILES	REMARKS
FROM	TO				+	-			
TOTALS									

PROJECT NAME WILLISTON REST AREAS
PROJECT NUMBER IR089-2(13)

SHEET 2 OF 8 SHEETS

D&K DWG NO. 7035

D-1 JAN 85

BRUNING 65083

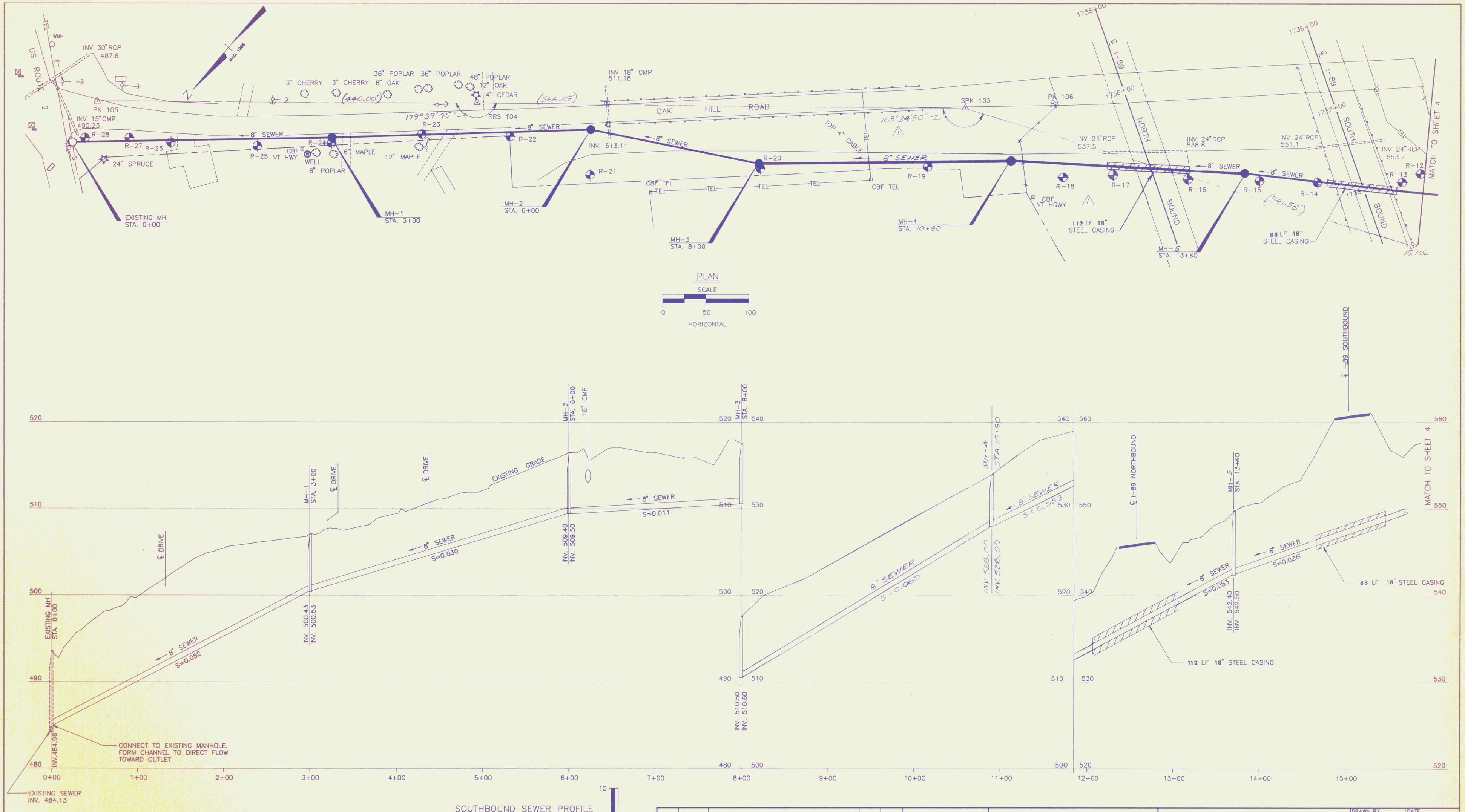

NO.	DATE	REVISIONS	BY	CK'D
1	1/25/90	ADDED SURVEY INFO.		
1	1/25/90	REV. SEWER ALIGN. & PROFILE		

STATE OF VERMONT · GEORGE DEWEY LEFAVOUR · NO. 4300 · REGISTERED · PROFESSIONAL ENGINEER

DuBois & King inc.
engineering planning management development

STATE OF VERMONT
AGENCY OF TRANSPORTATION
PLAN AND PROFILE
SEWER CONNECTION
FOR INTERSTATE 89 REST AREAS
WILLISTON, VERMONT
IR089-2(13)

DRAWN BY RWB/GPF	DATE AUG. 1989
CHECKED BY BOL	PROJ. NO. R88825
PROJ. ENG. CKG	DRAW. NO. 7036
SHEET 3 OF 8	

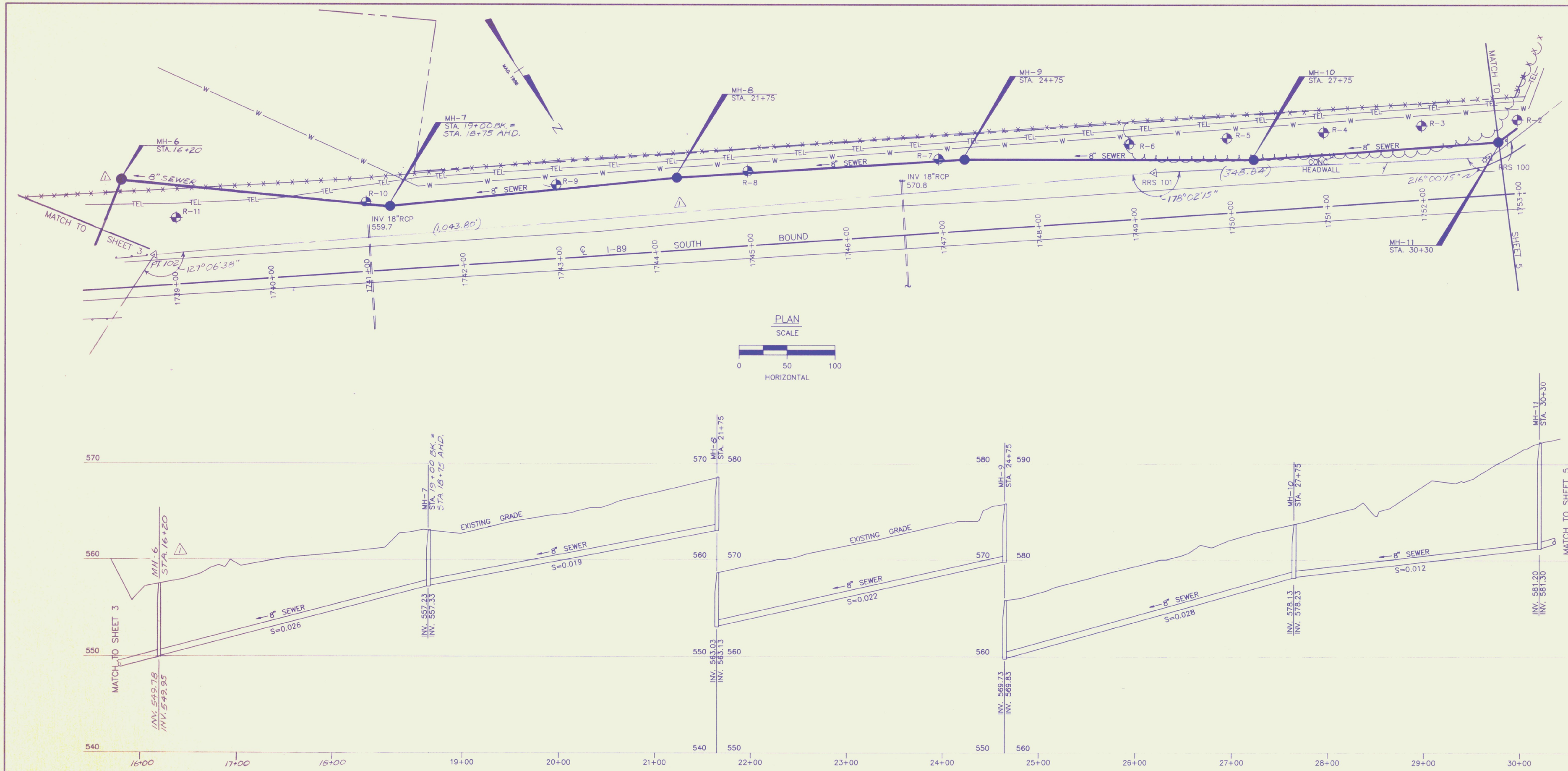

NO.	DATE	REVISIONS	BY	CK'D
1	1/25/90	ADDED SURVEY INFO. & REV. MH. NOS.	[illegible]	[illegible]
1	1/25/90	REVISED SEWER ALIGNMENT	[illegible]	[illegible]

STATE OF VERMONT
REGISTERED PROFESSIONAL ENGINEER
NO. 0300

DuBois & King inc.
engineering planning management development

STATE OF VERMONT
AGENCY OF TRANSPORTATION
PLAN AND PROFILE
SEWER CONNECTION
FOR INTERSTATE 89 REST AREAS
WILLISTON, VERMONT
IR089-2(13)

DRAWN BY RWB/GPF	DATE AUG. 1989
CHECKED BY [illegible]	PROJ. NO. R88825
PROJ. ENG. CKG	DRAW. NO. 7037

SHEET 4 OF 8

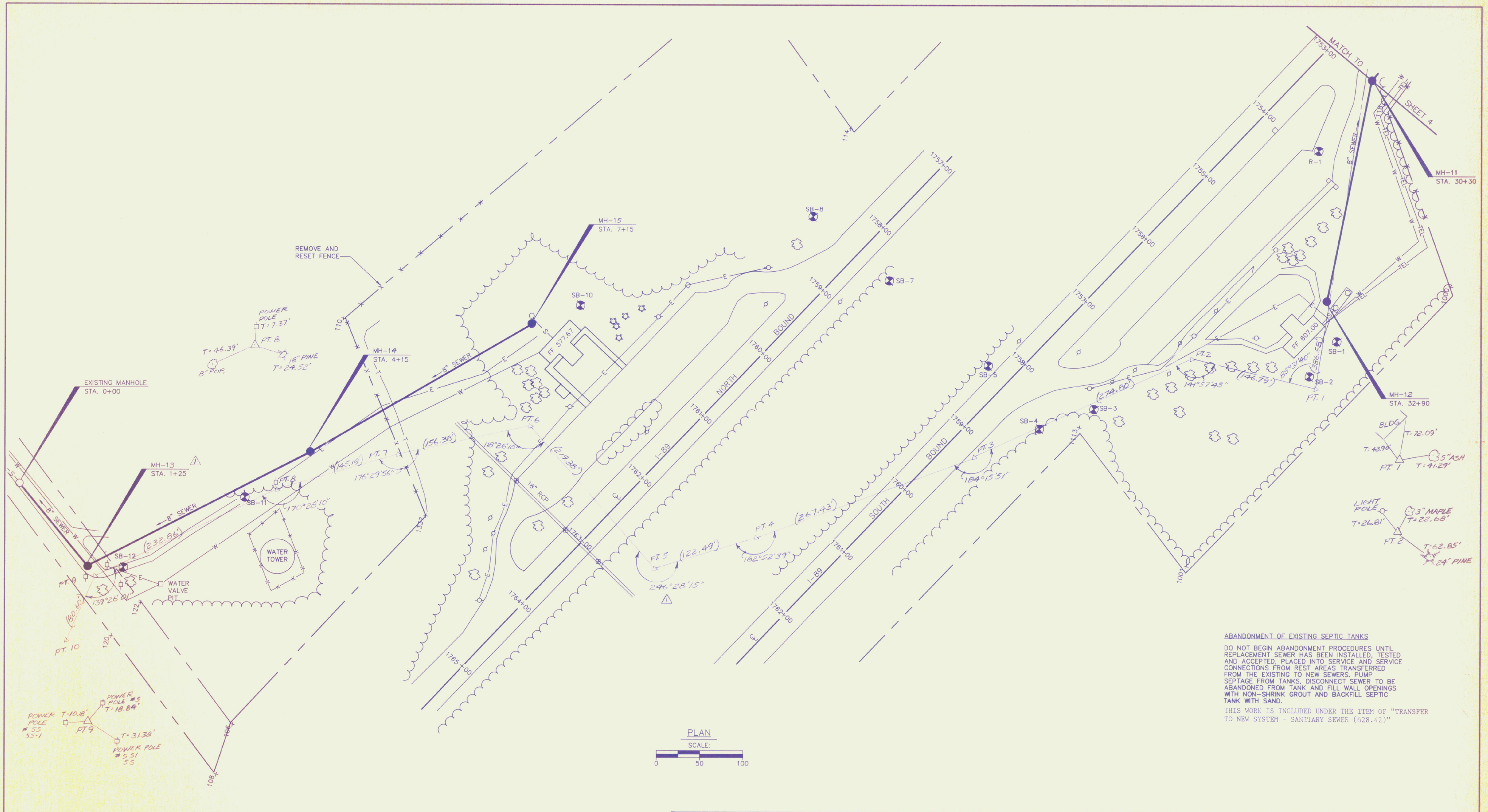

ABANDONMENT OF EXISTING SEPTIC TANKS

DO NOT BEGIN ABANDONMENT PROCEDURES UNTIL REPLACEMENT SEWER HAS BEEN INSTALLED, TESTED AND ACCEPTED, PLACED INTO SERVICE AND SERVICE CONNECTIONS FROM REST AREAS TRANSFERRED FROM THE EXISTING TO NEW SEWERS. PUMP SEPTAGE FROM TANKS, DISCONNECT SEWER TO BE ABANDONED FROM TANK AND FILL WALL OPENINGS WITH NON-SHRINK GROUT AND BACKFILL SEPTIC TANK WITH SAND.

THIS WORK IS INCLUDED UNDER THE ITEM OF "TRANSFER TO NEW SYSTEM - SANITARY SEWER (628.42)"

NO.	DATE	REVISIONS	BY	CK'D
1	1/25/90	ADDED SURVEY INFO. & REV. MH NOS.	[illegible]	[illegible]

STATE OF VERMONT
REGISTERED PROFESSIONAL ENGINEER
NO. 4300

DuBois & King inc.
engineering planning management development

STATE OF VERMONT
AGENCY OF TRANSPORTATION
PLAN
SEWER CONNECTION
FOR INTERSTATE 89 REST AREAS
WILLISTON, VERMONT
IR089-2(13)

DRAWN BY GPF/RAWJ	DATE AUG. 1989
CHECKED BY BDL	PROJ. NO. R88825
PROJ. ENG. CKG	DRAW. NO. 7038
SHEET 5 OF 8	

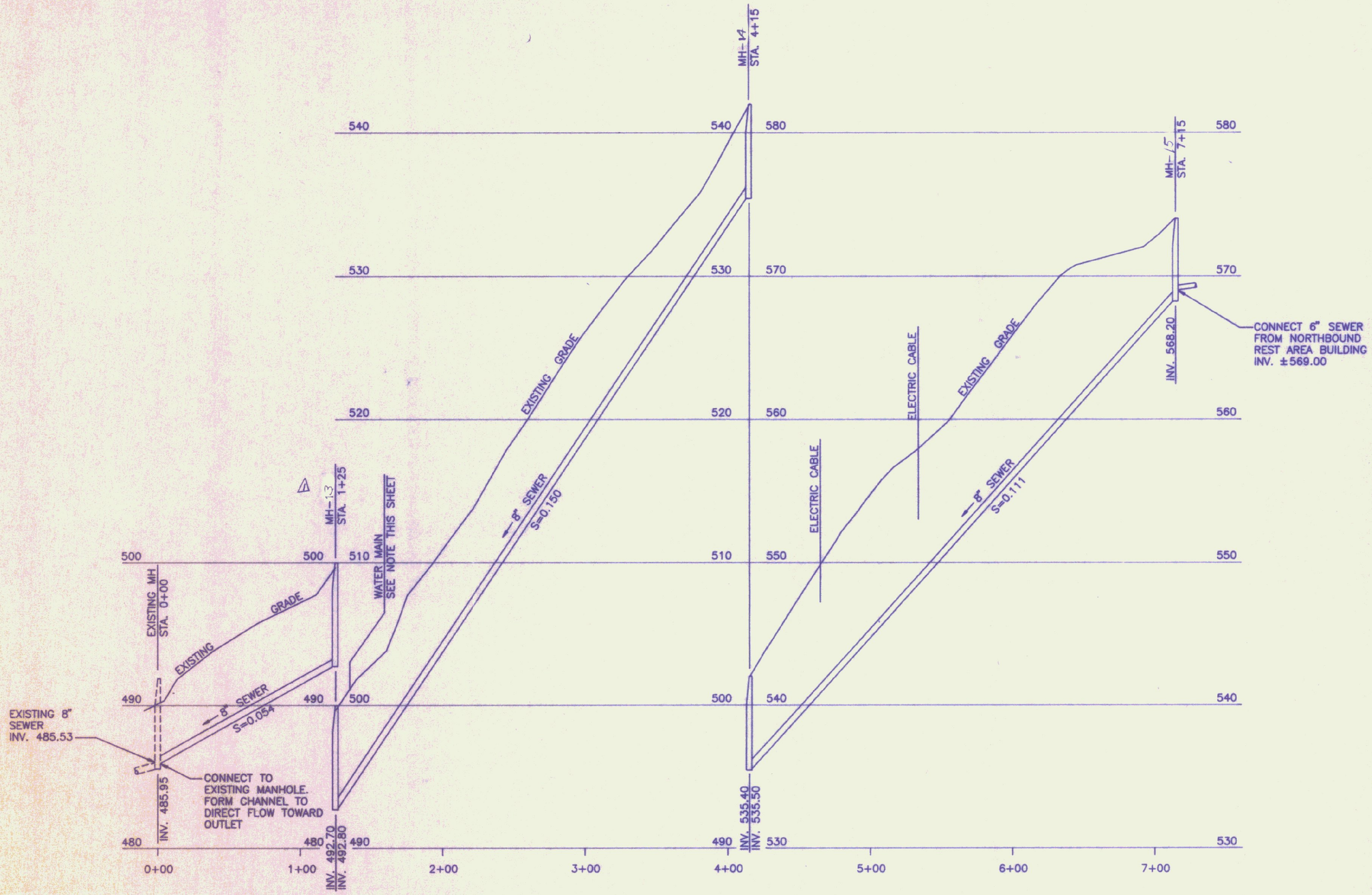

NORTHBOUND SEWER PROFILE

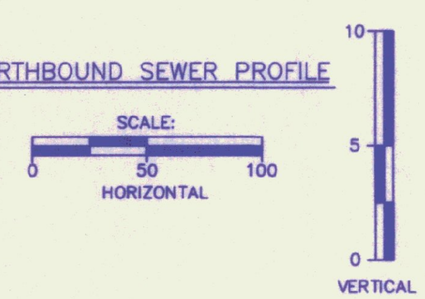

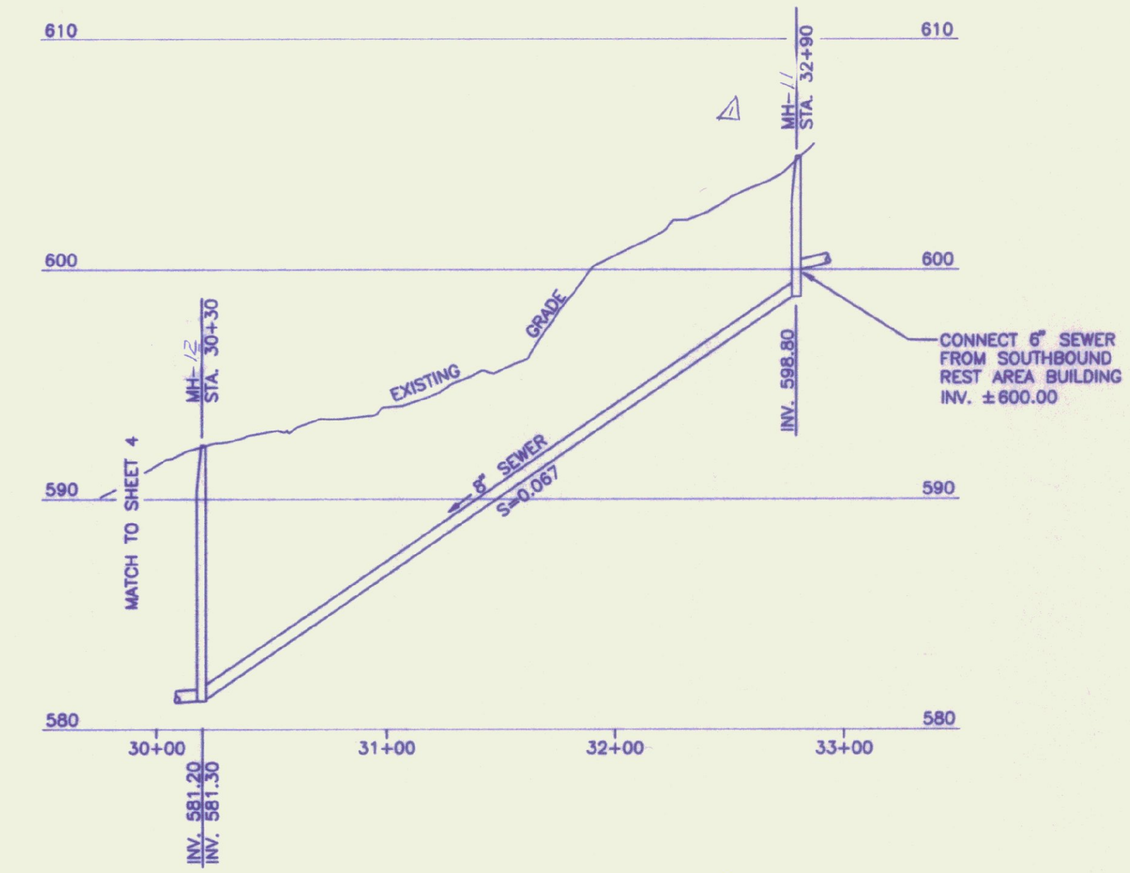

SOUTHBOUND SEWER PROFILE

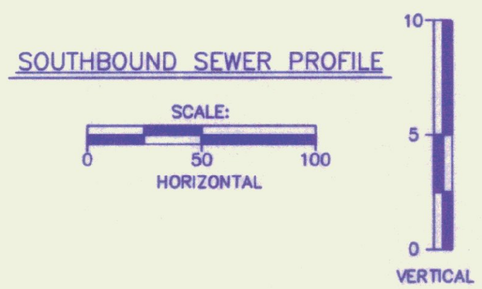

NOTE

CROSSINGS: SEWERS CROSSING WATER MAINS SHALL BE LAID BENEATH THE WATER MAIN WITH AT LEAST 18 INCHES VERTICAL CLEARANCE BETWEEN THE OUTSIDE OF THE SEWER AND THE OUTSIDE OF THE WATER MAIN. WHEN IT IS IMPOSSIBLE TO MAINTAIN THE 18 INCH VERTICAL SEPARATION OR WHERE THE SEWER MUST BE LAID ABOVE THE WATER MAIN; 1) THE CROSSING SHALL BE ARRANGED SO THAT ONE FULL LENGTH OF SEWER IS CENTERED ABOVE OR BELOW THE WATER LINE WITH SEWER JOINTS AS FAR AS POSSIBLE FROM WATER JOINTS; 2) THE SEWER PIPE MUST BE CONSTRUCTED TO WATER MAIN STANDARDS AND TESTED AS DISCRIBED IN SECTION 629.11 FOR A MINIMUM DISTANCE OF 20 FEET EITHER SIDE OF THE CROSSING OR A TOTAL OF THREE PIPE LENGTHS, WHICHEVER IS GREATER; 3) THE SECTION CONSTRUCTED TO WATER MAIN STANDARDS MUST BE PRESSURE TESTED TO MAINTAIN 50 PSI FOR 15 MINUTES WITHOUT LEAKAGE PRIOR TO BACKFILLING BEYOND ONE FOOT ABOVE THE PIPE TO ASSURE WATER TIGHTNESS; 4) WHERE A WATER MAIN CROSSES UNDER A SEWER, ADEQUATE STRUCTURAL SUPPORT SHALL BE PROVIDED FOR THE SEWER TO PREVENT DAMAGE TO THE WATER MAIN.

NO.	DATE	REVISIONS	BY	CK'D
1	1/25/90	REVISED M.H. NOS.	[illegible]	G.B.D.

STATE OF VERMONT
BRADFORD DEXTER LEFAVOUR
NO. 4500
REGISTERED
PROFESSIONAL ENGINEER

DuBois & King inc.
engineering planning management development

STATE OF VERMONT
AGENCY OF TRANSPORTATION
PROFILES
SEWER CONNECTION
FOR INTERSTATE 89 REST AREAS
WILLISTON, VERMONT
IR089-2(13)

DRAWN BY GPF/RAWJ	DATE AUG. 1989
CHECKED BY BDL	PROJ. NO. R88825
PROJ. ENG. CKG	DRAW. NO. 7039

SHEET 6 OF 8

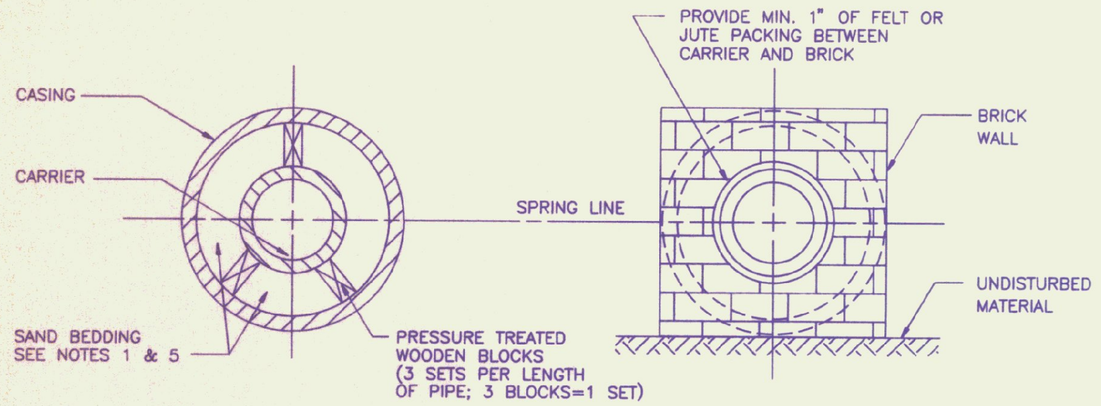

SECTION UNDER HIGHWAY

END SECTION

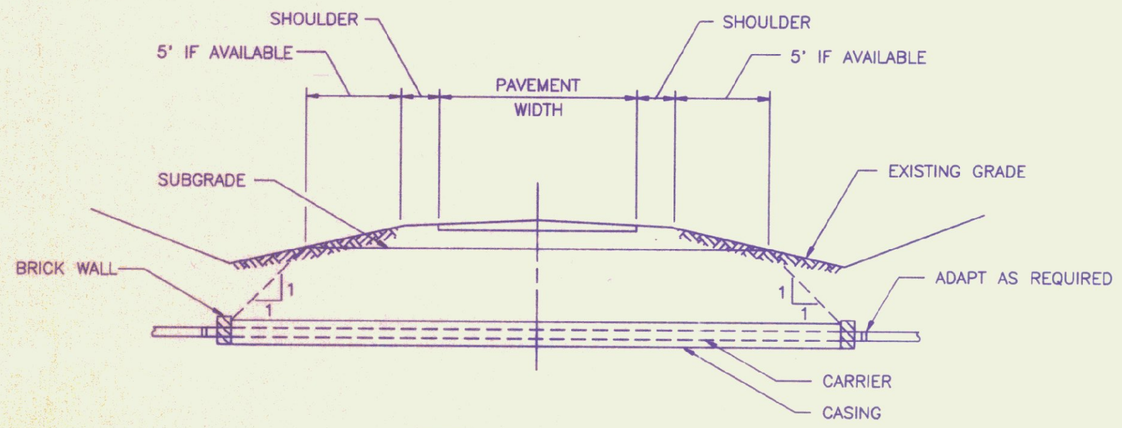

HIGHWAY CROSSING PROFILE

NOTES:

1. SAND BEDDING SHALL BE PLACED TO SPRING LINE OF CARRIER PIPE FOR GRAVITY SEWERS.
2. CASING TO BE INSTALLED AT SLOPE OF CARRIER.
3. CARRIER TO CENTERED IN CASING.
4. SINGLE COURSE OF BRICK TO BE USED IN CONSTRUCTION OF EACH WALL. WALL TO BE TIGHT AGAINST CASING TO PREVENT LOSS OF SAND OR INFILTRATION OF OUTSIDE MATERIAL.
5. SAND OR "GRITS" (WITHOUT FINES) SHALL BE HYDRAULICALLY PLACED OR AIR-BLOWN INTO PLACE. CONTRACTOR SHALL TAKE PRECAUTIONS TO PREVENT CARRIER PIPE FROM FLOATING.
6. BRICK SHALL CONFORM TO SECTION 705.01(b) OF THE SPECIFICATIONS.
7. WET DOWN BRICK WITH CLEAN WATER PRIOR TO LAYING.
8. COMPLETELY FILL HORIZONTAL AND VERTICAL JOINTS WITH TYPE II MORTAR AS DISCRIBED IN SECTION 707.02 OF THE SPECIFICATIONS.
9. LAY BRICK IN RUNNING BOND WITH 3/8" JOINTS.

HIGHWAY CROSSING DETAIL
NOT TO SCALE

HIGHWAY CROSSING SCHEDULE								
LOCATION	CARRIER		CASING					
	SIZE	MATERIAL	DIAMETER	MATERIAL	WALL THICKNESS	INSTALLATION METHOD	LENGTH	APPROXIMATE DEPTH
STA. 12+12-13+17	8" AND 1 1/2"	D.I MECH. JOINT	20"	STEEL	0.175"	JACKING OR BORING	105'	10'
STA. 14+59-15+59	8" AND 1 1/2"	D.I MECH. JOINT	20"	STEEL	0.375"	JACKING OR BORING	100'	14'

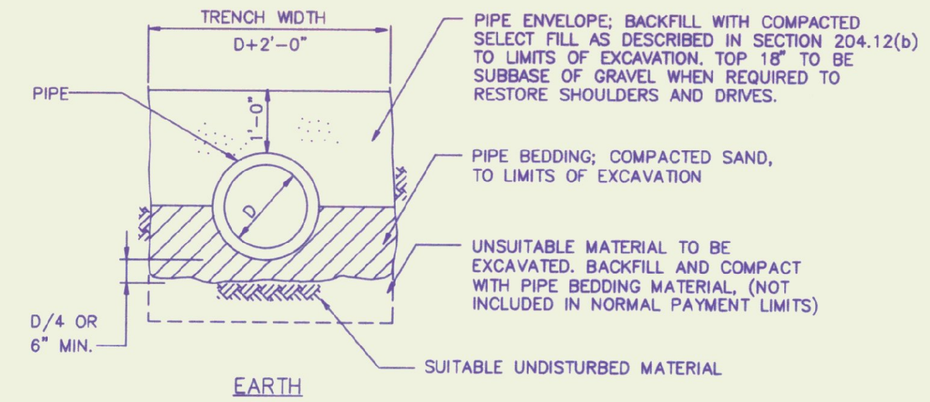

EARTH

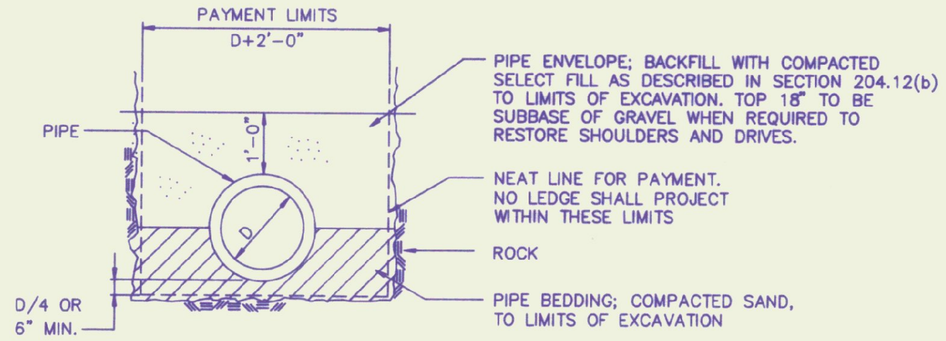

ROCK

TRENCH SECTIONS
NOT TO SCALE

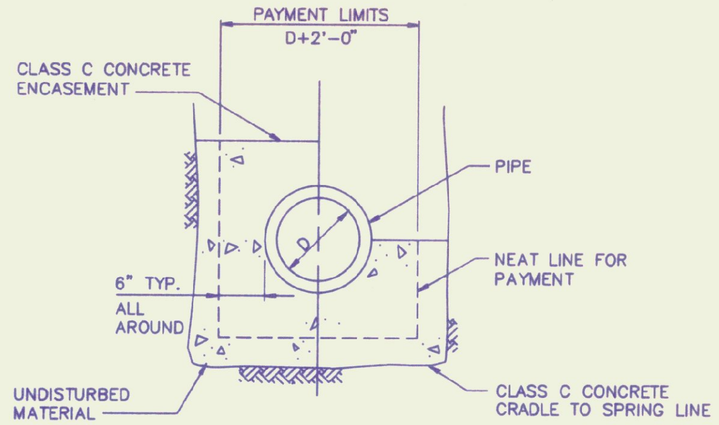

NOTES

1. CONCRETE ENCASEMENT/CRADLE SHALL EXTEND TO THE LIMITS OF EXCAVATION.
2. SECURE PIPE TO PREVENT MOVEMENT DURING CONCRETE PLACEMENT AND SETTING.

CONCRETE ENCASEMENT/CRADLE DETAIL
NO SCALE

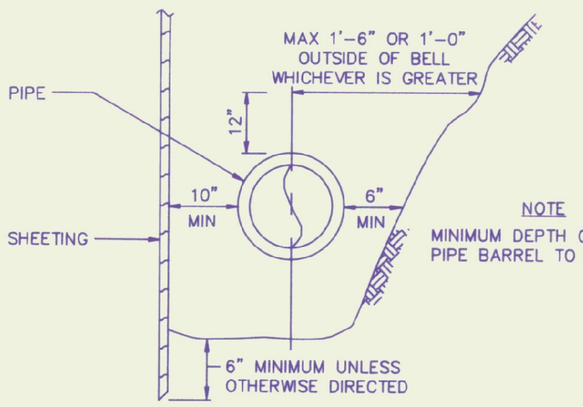

SHEETED TRENCH OPEN TRENCH

NOTE
MINIMUM DEPTH OF COVER ABOVE PIPE BARREL TO BE 5'-6".

TRENCH WIDTH LIMITS DETAIL
NO SCALE

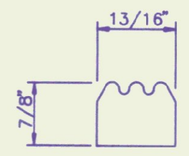

TYPICAL SECTION THROUGH MANHOLE STEPS

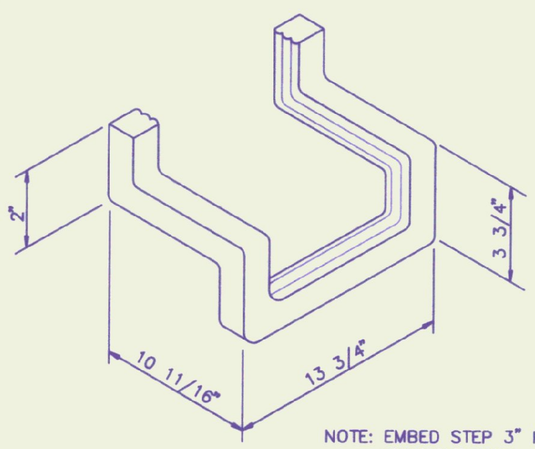

NOTE: EMBED STEP 3" INTO MANHOLE WALL.

ALUMINUM MANHOLE STEPS
NOT TO SCALE

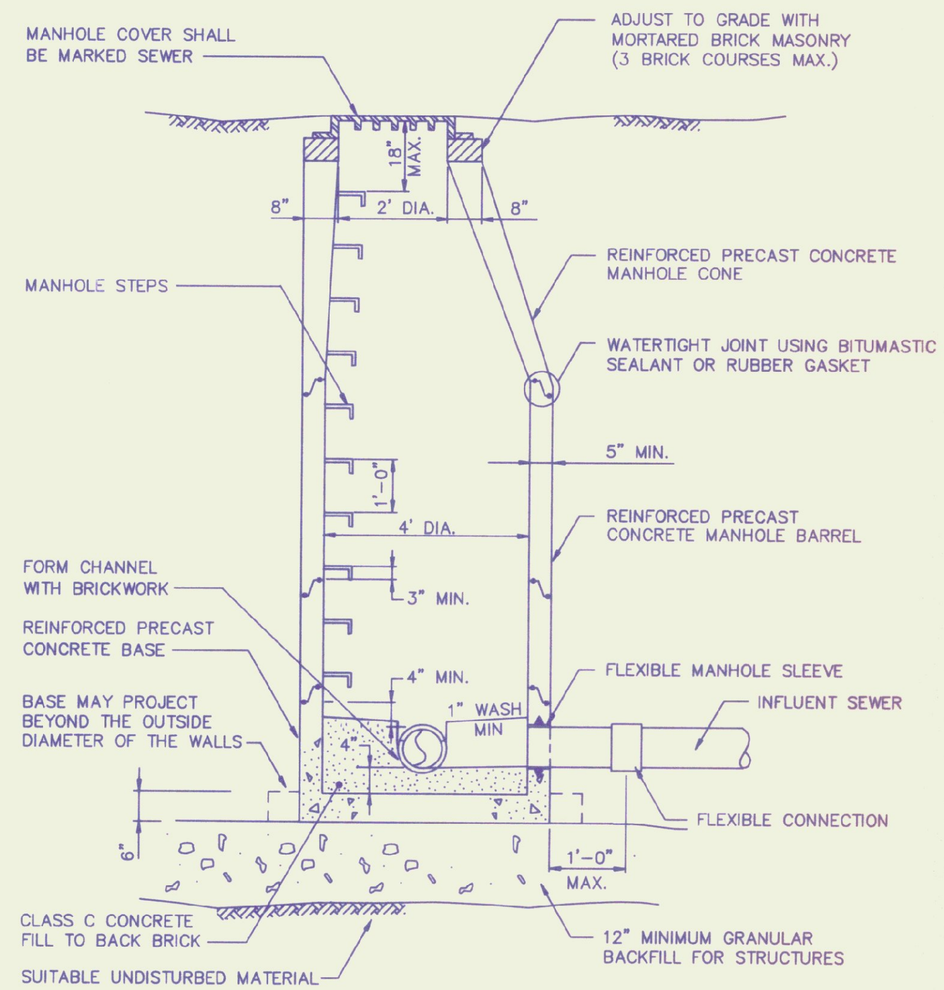

NOTE: WHEN MANHOLE DEPTH IS LESS THAN 6 FEET, A FLAT REINFORCED CONCRETE COVER WITH AN ECCENTRIC OPENING AND CAPABLE OF H-20 WHEEL LOADS MAY BE USED. REINFORCING FOR PRECAST MANHOLE SECTIONS SHALL CONFIRM TO ASTM DESIGNATION C478.

CONCRETE MANHOLE DETAIL
NOT TO SCALE

NO.	DATE	REVISIONS	BY	CK'D

STATE OF VERMONT REGISTERED PROFESSIONAL ENGINEER NO. 4100

DuBois & King inc.
engineering planning management development

STATE OF VERMONT
AGENCY OF TRANSPORTATION
MISCELLANEOUS DETAILS
SEWER CONNECTION
FOR INTERSTATE 89 REST AREAS
WILLISTON, VERMONT
IR089-2(13)

DRAWN BY GPF/RAWJ	DATE AUG. 1989
CHECKED BY BDJ	PROJ. NO. R88825
PROJ. ENG. CKG	DRAW. NO. 7040
SHEET 7 OF 8	

STATE OF VERMONT
AGENCY OF TRANSPORTATION
MATERIALS & RESEARCH DIVISION
SOILS SUBDIVISION

AUGER DRILLING NOTES

PROJECT/PROJECT NO.: Williston IR089-2 (13)
DRILLER McGlynn & Raymond DATE: 1 March 1989
NOTES FROM STATION R1 1753+83 I-89 SB TO STATION R28 10+49 OAK HILL RD
CHECKED BY [initials]
DATE CHECKED 3-17-89

HOLE NO.	STATION I89 SB	OFFSET	DEPTH	Soil Type	Color	Moisture	LAB. CLASS.	GROUND ELEV.
R1	1753+83	73'Lt. (S)	0.0-4.3	Si&Sts	Brn	Moist	A-4 SaSi	
		(S)	4.3-10.0	(HP) Sa&Sts	✓	✓	A-4 SaGrSi	
			✓	NLTD	NGW			
R2	1752+97	73'Lt.	0.0-6.0	Si&Sts	Brn	Moist		
			6.0-8.5	(HP) Si&Sts	✓	✓		
			✓	TLOB	4.2 TGW			
R3	1751+93	74'Lt.	0.0-1.0	SaSi	Brn	Moist		
		(S)	1.0-10.0	GrSi	✓	✓	A-4 SaSi	
			✓	NLTD	2.8 TGW	Hard Packed 5.0-10.0		
R4	1750+96	73'Lt. (S)	0.0-2.0	SaSi	Dk Brn	Moist	A-4 SaSi	
			2.0-10.0	Si,Sa	Brn	Moist to Sat.		
			✓	NLTD	2.8 TGW	Hard Packed 7.0-10.0		
R5	1749+93	74'Lt.	0.0-2.0	SaSi	Dk Brn	Moist		
			2.0-10.0	SaSi with Sts.	Brn	✓		
			✓	NLTD	3.8 TGW			
R6	1748+94	75'Lt. (S)	0.0-3.0	SaSi	Dk Brn	Moist	A-4 SaSi	
		(S)	3.0-10.0	SaSi with Sts	Brn	✓	A-4 SaSi	
			✓	NLTD	4.5 TGW	Large Sts 6.0-10.0		
R7	1746+94	72'Lt.	0.0-3.0	SaSi	Dk Brn	Moist		
			3.0-10.0	SaSi with Sts	Brn	MTW		
			✓	NLTD	3.4 TGW	Large Sts [?]		
R8	1744+94	72'Lt. (S)	0.0-2.0	GrSi	Brn	Moist	A-4 SaSi	
		(S)	2.0-10.0	SaSi with Sts	✓	✓	A-4 SaSi	
			✓	NLTD	3.8 TGW			
R9	1742+94	73'Lt. (S)	0.0-5.0	Si	Brn	Moist	A-4 SaSi	
		(S)	5.0-10.0	HP Si&Sts	✓	✓	A-4 SaSi	
			✓	NLTD	NGW			
R10	1740+94	64'Lt.	0.0-6.0	Si&Sts	Brn	Moist		
			6.0-10.0	HP Si,Sa&Sts	✓	✓		
			✓	NLTD	NGW			
R11	1738+94	63'Lt. (S)	0.0-5.0	Si	Brn	Moist	A-4 SaSi	
		(S)	5.0-10.0	HP Si,Sa	✓	✓	A-4 SaGrSi	
			✓	NLTD	NGW			
R12	1737+93	63'Lt.	0.0-5.0	Si&Sts	Brn	Moist		
			5.0-10.0	HP Si,Sa&Sts	✓	✓		
			✓	NLTD	NGW			
(See Boring Log for R13)								
R14	1737+60	54'Rt.	0.0-5.5	Si&Sts	Brn	Moist		
(Also See Boring Log R14A)			5.5-10.0	HP Si,Sa&Sts	✓	✓		
			✓	NLTD	NGW			
R15	1737+47	118'Rt. (S)	0.0-5.5	Si&Sts	Brn	Moist	A-4 SaGrSi	
		(S)	5.5-10.0	HP Si,Sa&Sts	✓	✓	A-4 SaSi	
			✓	NLTD	NGW			
(See Boring Log R16)								
R17	1736+87	46'Rt.	0.0-5.0	SaSi	Brn	Moist		
(Also See Boring Log R17A)			5.0-10.0	SaSi with Sts	✓	Dry		
			✓	NLTD	4.5 TGW	Very Hard Packed 8.0-10.0		
R18	1736+93	106'Rt. (S)	0.0-5.0	SaSi	Brn	Moist	A-4 CrSi	
		(S)	5.0-10.0	Si,Sa&Sts	✓	✓	A-4 SaGrSi	
			✓	NLTD	4.8 TGW			
R19 (Oak Hill Road Sta.)	20+29	70'Rt.	0.0-10.0	SaSi with Sts	Brn	Moist		
			✓	NLTD	5.8 TGW	Hard Packed 6.0-10.0		
R20	18+33	70'Rt.	0.0-7.0	GrSi	Brn	Moist		
			7.0-8.0	SaSi&Sts	✓	✓		
			8.0-10.0	SaSi&Sts	Grey	✓		
			✓	NLTD	4.2 TGW			
R21	16+33	69'Rt. (S)	0.0-8.0	GrSi	Brn	M to Sat.	A-1-b GrSa	
		(S)	8.0-10.0	Cl	Grey	Wet	A-6 SiCl LL=29 PI=14	
			✓	NLTD	5.6 TGW			
R22	15+43	20'Rt.	0.0-10.0	SaSi with Sts	Brn	M to Sat.		
			✓	NLTD	7.5 TGW			
R23	14+41	12'Rt. (S)	0.0-10.0	GrSi	Brn	M to Sat.	A-2-4 SiSa	
			✓	NLTD	NGW			
R24	13+37	16'Rt.	0.0-4.0	GrSi	Brn	Moist		
			4.0-7.0	SaSi	✓	Wet to Sat.		
			7.0-10.0	SaSi	Grey	✓		
			✓	NLTD	(Hole Caved at 4.7)			
R25	12+50	15'Rt.	0.0-4.0	GrSi	Brn	Moist		
			4.0-6.0	Si,Sa	✓	MTW		
			6.0-10.0	SiSa	Grey	✓		
			✓	NLTD	5.9 TGW			
R26	11+52	21'Rt.	0.0-1.0	SaSi	Brn	Moist		
		(S)	1.0-10.0	Si,Sa	✓	MTW	A-4 Silt	
			✓	NLTD	(Hole Caved @ 3.0)			
R27	11+03	23'Rt.	0.0-1.0	GrSi	Brn	Moist		
			1.0-10.0	SiSa	Brn & Grey	MTW		
			✓	NLTD	Hole Caved @ 6.0			
R28	10+49	27'Rt.	0.0-4.0	GrSi	Brn	Moist		
			4.0-9.0	SaSi	✓	Wet		
			9.0-10.0	Cl	Grey	✓		
			✓	NLTD	(Hole Caved @ 4.7)			

BORING NO. R-13

ELEV.

DEPTH	BLOWS ON CASING	STANDARD PENETRATION	SAMPLE NUMBER	MOISTURE	COLOR	LABORATORY CLASSIFICATION OF SOIL
		-		M	brn	A-4 SaGrSi w = 8.8%
		R				A-4 SaGrSi w = 7.8% (GLACIAL TILL)
		R				A-4 SaSi w = 10.2%
		-				A-4 SaSi w = 9.5%
10		R				A-4 SaSi w = 13.0%
						HOLE STOPPED @ 11.0' IN HARDPAN, GLACIAL TILL
						NO GROUNDWATER ON 3-1-89
20						

BORING NO. R-14A

ELEV.

DEPTH	BLOWS ON CASING	STANDARD PENETRATION	SAMPLE NUMBER	MOISTURE	COLOR	LABORATORY CLASSIFICATION OF SOIL
		17		M	brn	A-4 SaSi w = 12.3%
		44		M	brn	A-4 SaSi w = 9.1% (GLACIAL TILL)
		R				A-4 SaSi w = 7.5%
		R				A-4 SaGrSi w = 8.5%
10		R				A-4 SaSi w = 9.3%
						HOLE STOPPED @ 11.0' IN HARDPAN, GLACIAL TILL
						NO GROUNDWATER ON 3-1-89
20						

BORING NO. R-16

ELEV.

DEPTH	BLOWS ON CASING	STANDARD PENETRATION	SAMPLE NUMBER	MOISTURE	COLOR	LABORATORY CLASSIFICATION OF SOIL
		91		M	brn	A-4 SaGrSi w = 7.8%
						NO SAMPLE, BOULDER
		R		M	brn	A-4 SaGrSi w = 7.4% (GLACIAL TILL)
		R				A-4 SaGrSi w = 7.0%
10		R				A-2-4 SiGrSa w = 7.6%
						HOLE STOPPED @ 11.0' IN HARDPAN, GLACIAL TILL
						NO GROUNDWATER ON 3-3-89
20						

BORING NO. B-17A

ELEV.

DEPTH	BLOWS ON CASING	STANDARD PENETRATION	SAMPLE NUMBER	MOISTURE	COLOR	LABORATORY CLASSIFICATION OF SOIL
		19		M	brn	A-4 SaSi w = 13.9%
		89		M	brn	A-4 SaSi w = 9.0% (GLACIAL TILL)
		R				A-4 SaGrSi; w = 9.3%
		-				A-4 SaSi w = 7.6%
10		R				A-4 SaGrSi; w = 8.5%
						HOLE STOPPED @ 11.0' IN HARDPAN, GLACIAL TILL
						NO GROUNDWATER ON 3-3-89
20						

STATE OF VERMONT
AGENCY OF TRANSPORTATION
MATERIALS & RESEARCH DIVISION
SOILS SUBDIVISION

AUGER DRILLING NOTES

PROJECT/PROJECT NO.: Williston IR089-2 (13)
DRILLER McGlynn DATE: 30 Sept. 1988
NOTES FROM STATION SB1 TO STATION SB17
CHECKED BY PMP [initials]
DATE CHECKED 11-30-88 12-5-88

HOLE NO.	STATION	OFFSET	DEPTH	Soil Type	Color	Moisture	LAB. CLASS.	GROUND ELEV.
SB1		Rt of South Bound	0.0-5.0	Si,Sa	Brn	MTW		
			✓	TLOB	NGW			
SB2		Rt of Southbound	0.0-4.0	Si,Sa	Brn	Moist		
			4.0-5.0	Poss. Soft Rock				
			✓	Hard LOB		2.5 TGW		
SB3		Rt. of Southbound	0.0-3.0	SaSi	Brn	Moist		
		(S)	3.0-8.0	Si,Sa with Sts	✓	✓	A-4 SaSi	
			✓	TLOB	NGW			
SB10		Rt. of Northbound	0.0-2.0	Si				
		(S)	2.0-7.0	Si,Sa	Brn	Moist	A-4 SaSi	
		(S)	7.0-13.5	(HP) Si,Sa&Sts	✓	✓	A-4 SaSi	
			✓	TLOB	8.5 TGW			
SB11		Rt. of Northbound (S)	0.0-7.0	Si,Sa&Sts	Brn	Moist	A-2-4 SaSi	
			✓	TLOB	NGW			
SB12		Rt. of Northbound (S)	0.0-9.0	Si,Sa	Brn	Moist	A-4 Silt	
		(S)	9.0-15.0	(HP) Si,Sa&Sts	Grey	✓	A-4 Silt	
			✓	NLTD	NGW			

PROJECT Williston NO. IR 089-2(13)
STRUCTURE IDENTIFICATION HOLE NO. SB-4
STATION OFFSET Rt. of S.B. GROUND EL. GW EL. 8' Below Ground

DEPTH BELOW GND. SUR.	BLOWS ON CASING	BLOWS ON SAMPLER 0/6	6/12	12/18	N Bls/Ft.	MOISTURE	COLOR	FIELD IDENTIFICATION AND REMARKS	LABORATORY CLASSIFICATION OF SOIL	LL	PI
		3	9	11	20	M	brn	Silt with Stones	A-2-4 Silty Sand w: 12.6%		
5		75	23	100/0.5	R	M	brn	Soft Rock	A-1-b Silty Gravel w: 9.3%		
								Gr. Water El. ▼			
10		102/0.5			R	M	brn	Soft Rock	A-1-a Sandy Gravel w: 8.8%		
		100/0.2			R	W	gr	Soft Rock w/ Silt	A-1-a SaGr w: 10.3%		
								Hole stopped @ 12.5'			
15											

PROJECT Williston NO. IR 089-2(13)
STRUCTURE IDENTIFICATION HOLE NO. SB-5
STATION OFFSET Lt. of S.B. in Median GROUND EL. GW EL. NGW

DEPTH BELOW GND. SUR.	BLOWS ON CASING	BLOWS ON SAMPLER 0/6	6/12	12/18	N Bls/Ft.	MOISTURE	COLOR	FIELD IDENTIFICATION AND REMARKS	LABORATORY CLASSIFICATION OF SOIL	LL	PI
		6	4	2	6	M	brn	Sandy Gravelly	A-1-b Sandy Gravel w: 10.6%		
5		12	19	15	34	M	brn	Gravelly Silt (Hard Packed)	A-4 Sandy Silt w: 14.6%		
10		23	29	37	66	M	brn/gr	Gravelly Silt (Hardpan)	A-4 Sandy Silt w: 11.9%		
15		62	80	100/0.5	R	W	brn/gr	Soft Rock w/ Silt	A-1-b Si/Gr w/ 10.2%		
								Hole stopped at 16.0'			
20											

PROJECT Williston NO. IP 089-2(13)
STRUCTURE IDENTIFICATION HOLE NO. SB-7
STATION OFFSET Lt. of N.B. in Median GROUND EL. GW EL. 1' Below Ground

DEPTH BELOW GND. SUR.	BLOWS ON CASING	BLOWS ON SAMPLER 0/6	6/12	12/18	N Bls/Ft.	MOISTURE	COLOR	FIELD IDENTIFICATION AND REMARKS	LABORATORY CLASSIFICATION OF SOIL	LL	PI
		2	3	14	17	M	brn	Gravelly Silt ▼	A-4 Silt w: 10.6%		
5		15	42	50	92	M	brn	Gravelly Silt	A-4 Sandy Silt w: 13.6%		
10		23	77	100/0.3	R	M	brn/gr	Gravelly Silt (Hardpan) Small Boulders 10.0'-15.0'	A-4 Sandy Silt w = 10.7% Small Boulders 10.0'-17.0'		
15								Boulder			
		100/0.1	-		R			No Recovery Hole stopped @ 17.2'			
20											

PROJECT Williston NO. IR 089-2(13)
STRUCTURE IDENTIFICATION HOLE NO. SB-6
STATION OFFSET Rt. of N.B. GROUND EL. GW EL. 13.8' Below Ground

DEPTH BELOW GND. SUR.	BLOWS ON CASING	BLOWS ON SAMPLER 0/6	6/12	12/18	N Bls/Ft.	MOISTURE	COLOR	FIELD IDENTIFICATION AND REMARKS	LABORATORY CLASSIFICATION OF SOIL	LL	PI
		3	4	6	10	M	brn	Silt w/ Stones	A-4 Silt w: 22.6%		
5		13	37	56	67	M	brn	Gravelly Silt	A-4 Silt w: 11.7%		
								Small Boulders 9.0-9.5'			
10		37	63	-	R	M	brn	Gravelly Silt (Hardpan)	A-4 Silt w: 10.2%		
15		41	37	25	100/0.3	M	brn/gr	Silty Gravel (Hardpan) ▼	A-1-b Silty Gravel w: 9.1%		
								Hole stopped at 16.5' NLTD			
20											

SUBSURFACE EXPLORATIONS

Owner has had borings and/or hand probes made at various times and locations at the site. For the convenience of bidders, logs of such subsurface data are listed on this sheet. The approximate locations of the borings are shown on the Drawings.

The logs represent the findings at the time the explorations were made and this data is offered in good faith solely for the purpose of placing Contractor in receipt of all information available, and in no event is to be considered part of the Contract Documents. Contractor must interpret such data according to his own judgment and acknowledges that he is not relying upon the same as accurately describing the subsurface conditions which may be found to exist. Contractor further acknowledges that he assumes all risk contingent upon the nature of the subsurface conditions to be actually encountered by him in performing the work covered by the Contract, even though such actual conditions may result in Contractor performing more, or less work than he originally anticipated.

Contractor may make his own borings, hand probes, explorations and observations to determine soil, water and other subsurface conditions. Contractor shall plan the Work based upon his own findings.

If actual subsurface or latent conditions materially differ from the data referred to above, immediately notify Engineer.

NO.	DATE	REVISIONS	BY	CK'D

STATE OF VERMONT · BRADFORD DENTON? REGISTERED · PROFESSIONAL ENGINEER · NO. 1800 [seal, signed]

DuBois & King inc. — engineering planning management development

STATE OF VERMONT
AGENCY OF TRANSPORTATION
BORING LOGS
SEWER CONNECTION
FOR INTERSTATE 89 REST AREAS
WILLISTON, VERMONT
IR089-2(13)

DRAWN BY	DATE
EBS	AUG. 1989
CHECKED BY	PROJ. NO.
BDL	R88825
PROJ. ENG.	DRAW. NO.
CKG	7041
SHEET 8	OF 8

ROADSIDE REST FACILITIES
PLUMBING (GEC-48-004, M-1)

STATE OF VERMONT
DEPARTMENT OF HIGHWAYS

PROJECT N?

SCALE 1/4"=1'-0" SHEET OF

P-1

RISER DIAGRAM
SOIL & WASTE
NO SCALE

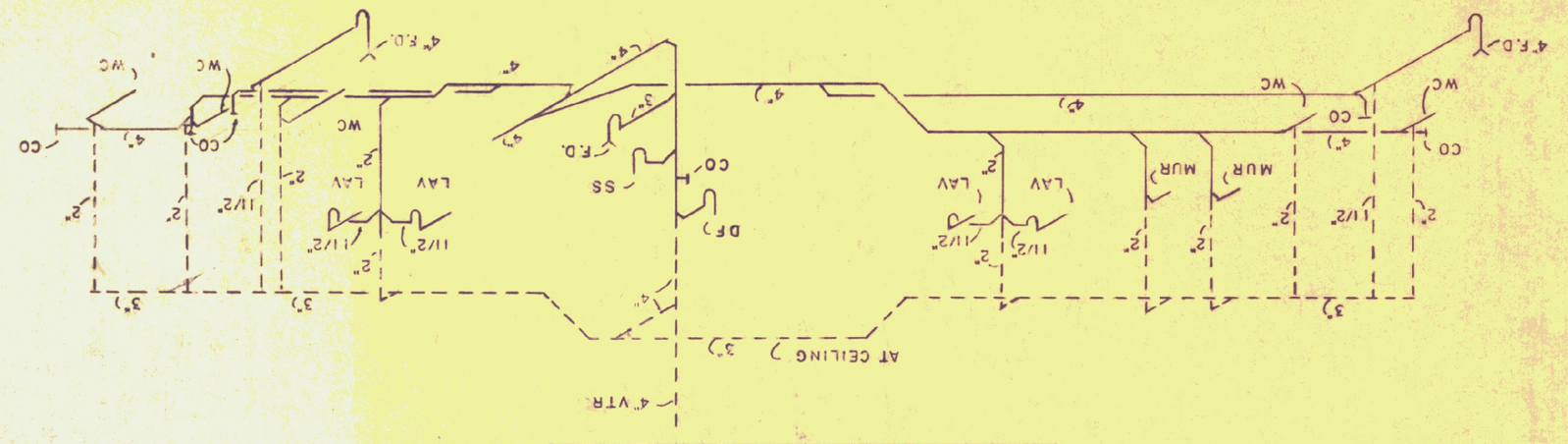
4" F.D.
WC
CO
4"
4"
WC
CO
4"
4"
WC
CO
4"
4"

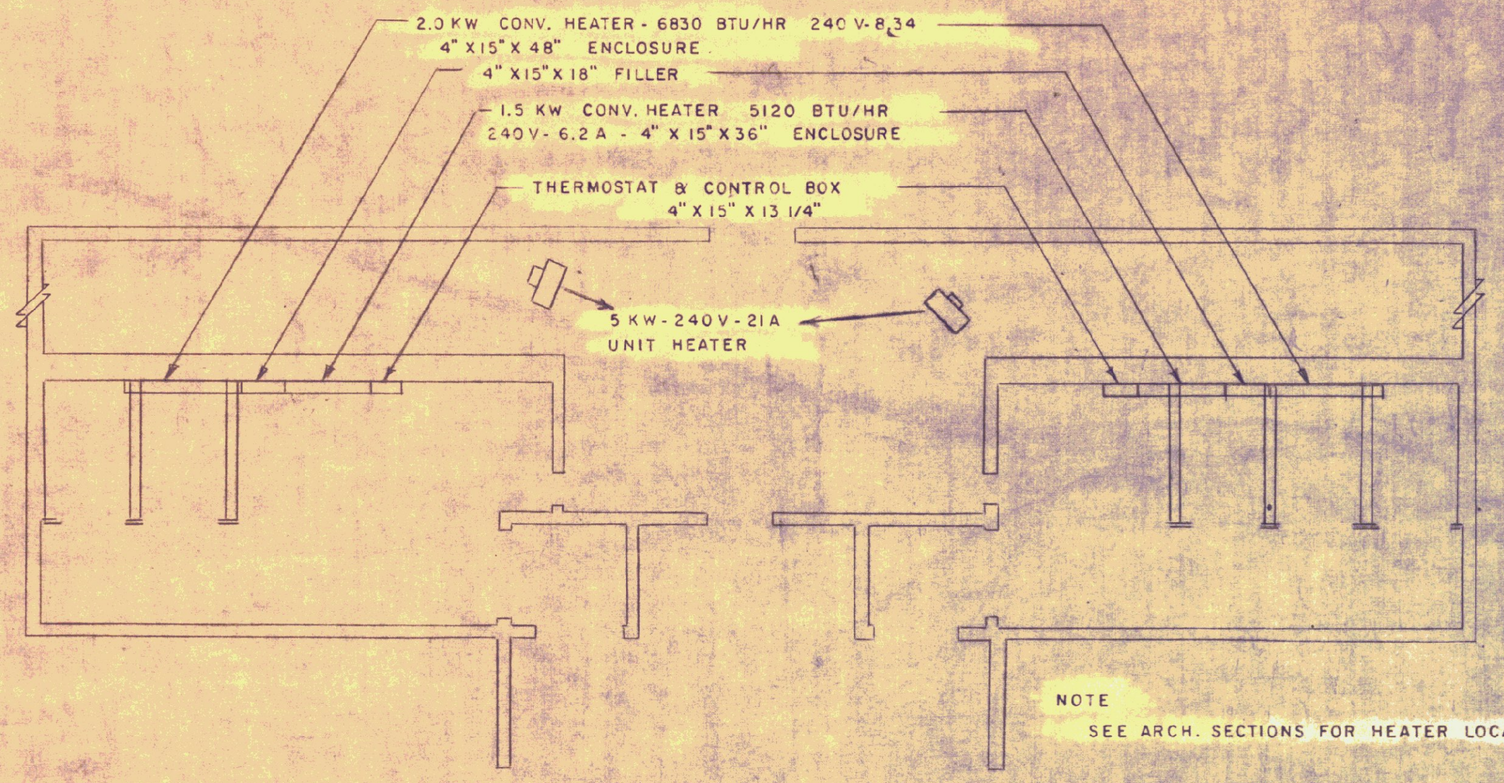

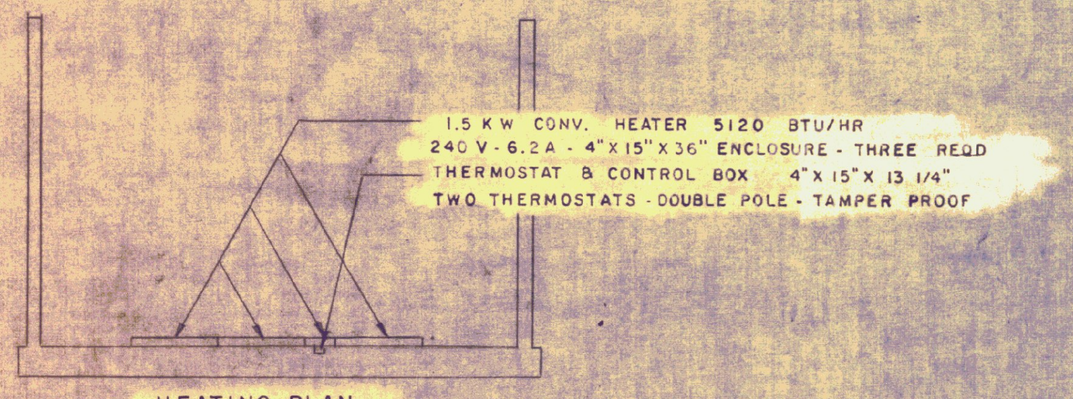

HEATING PLAN
SCALE 1/4" = 1'-0"

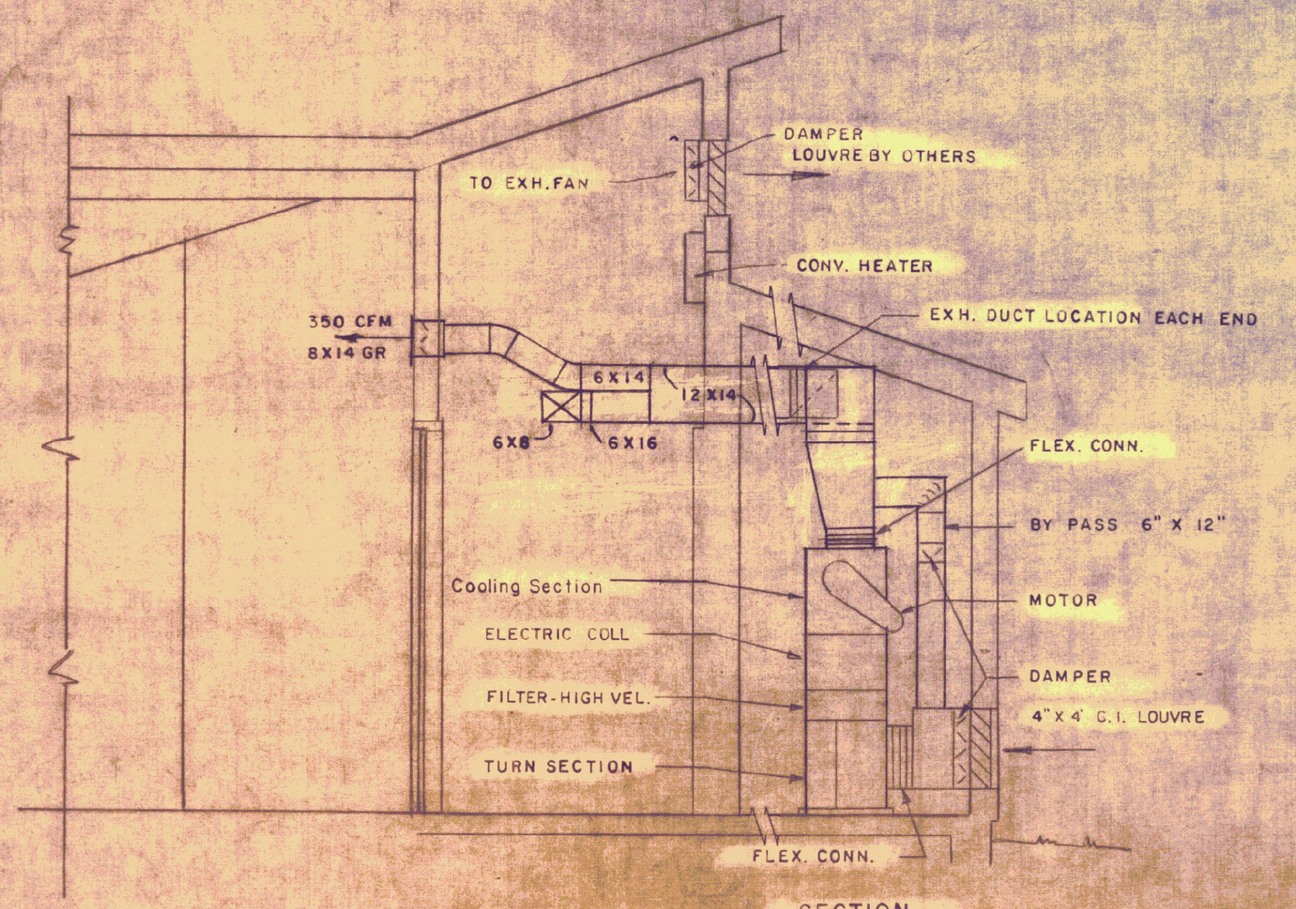

SECTION
AT VENTILATION UNIT
SCALE 1/2" = 1'-0"

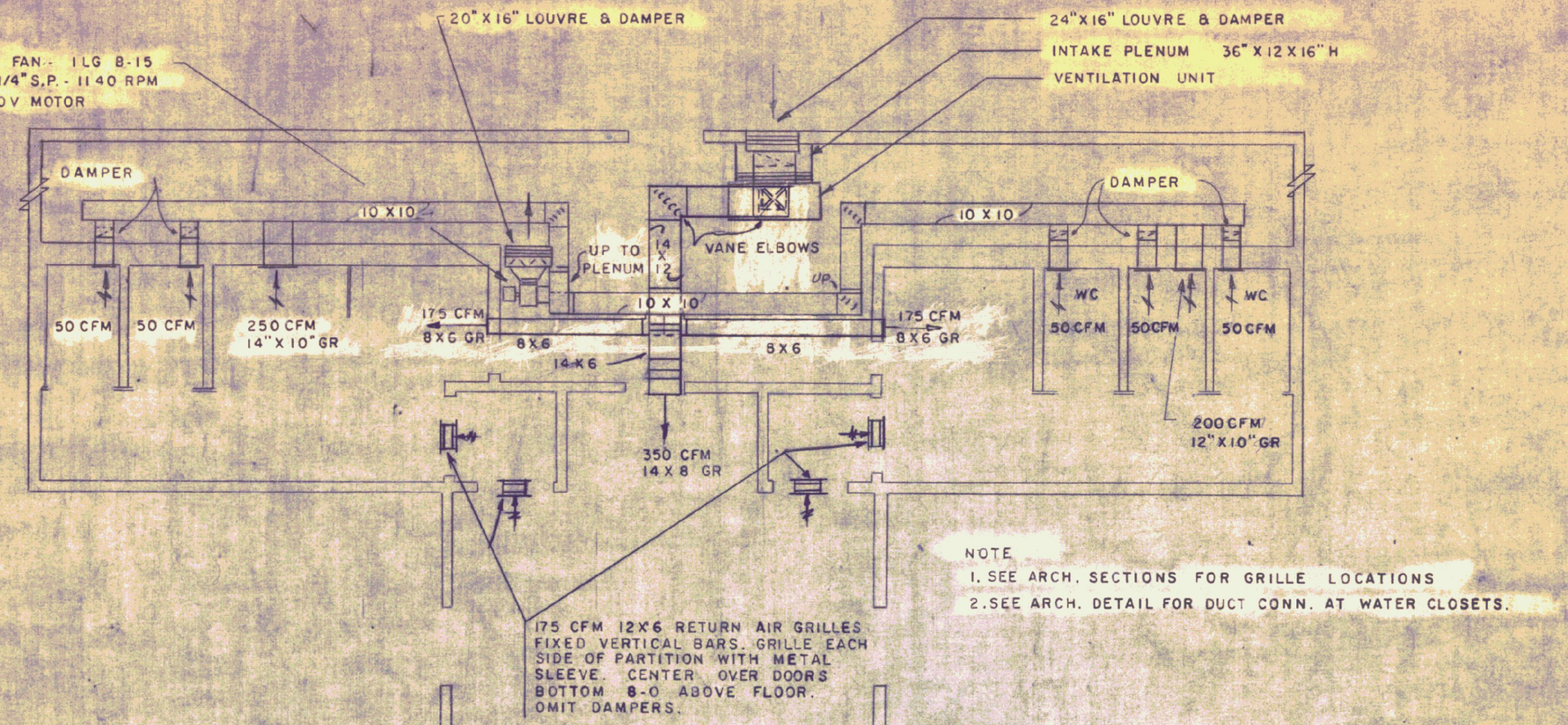

VENTILATION PLAN
SCALE 1/4" = 1'-0"

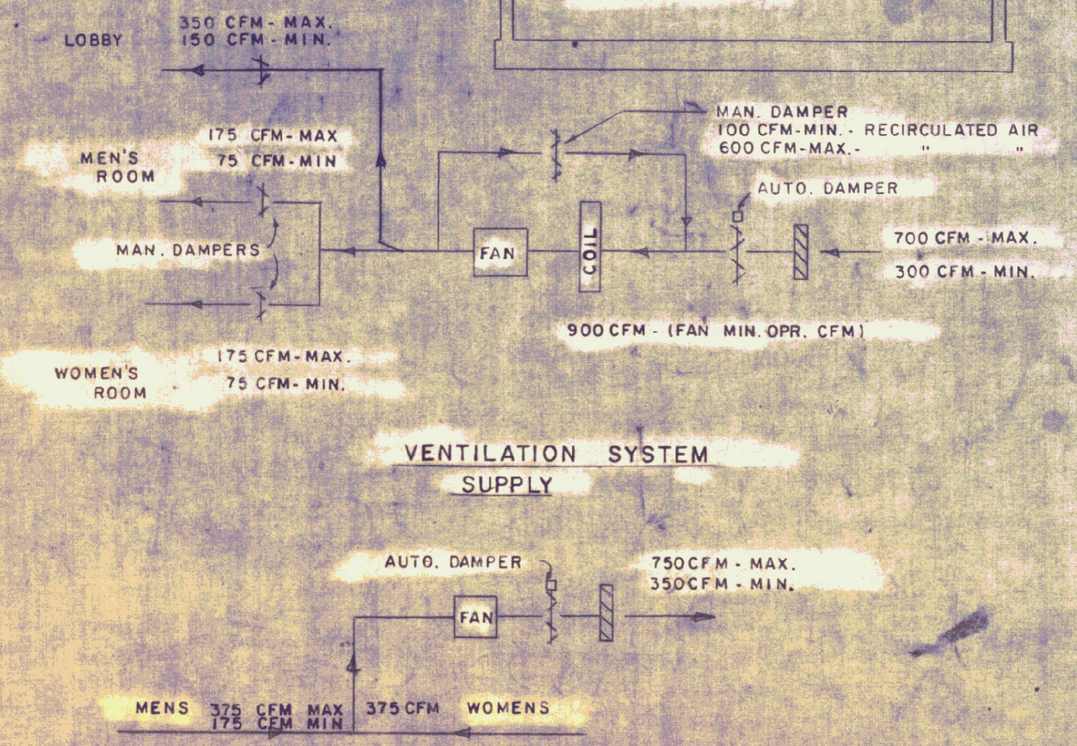

FLOW DIAGRAMS
NO SCALE

ROADSIDE REST FACILITIES
HEATING & VENTILATION

STATE OF VERMONT
DEPARTMENT OF HIGHWAYS

PROJECT Nº
SCALE - As Shown
SHEET OF
HV-1

NOTE:
THIS SECTION NOT TO SCALE

NOTE:
* 549 CLASSIC SOLID PLASTIC SEAT WITH COVER, #720 (CLOSED FRONT SEAT), #721 (OPEN FRONT SEAT) EXTRA HEAVY DUTY SEAT & COVER, OR EQUIVALENT FOR PARAPLEGICS STALLS.

UTILITY

MEN

WOMEN

LOBBY

PORTICO

PORTICO

GRAB BARS

GRAB BARS

TOWEL RECEPTORS

PLAS. LAM.

PLAS. LAM.

TEL. BOOTH BY UTILITY

D.F.

PLAS. LAMINATE

PLAS. LAMINATE

RAMP UP WITH 3'-0" RADIUS TO MEET THRESHOLD.

RAMP UP WITH 3'-0" RADIUS TO MEET THRESHOLD.

RAMP DOWN

RAMP DOWN

RAMP DOWN

RAMP DOWN

INTAKE VENT FOR FURNACE 24" X 16"

CONCRETE FLOOR TO HERE

ASH RECEPTACLES

BENCHES

DESK
(to be furnished by others)

PHOTO MURALS

ROADSIDE REST FACILITIES	
PLAN	
STATE OF VERMONT DEPARTMENT OF HIGHWAYS	
PROJECT Nº	2
SCALE: 1/2"=1'-0"	

NOTE:
#549 CLASSIC SOLID PLASTIC SEAT WITH COVER, #720 (CLOSED FRONT SEAT), #721 (OPEN FRONT SEAT) EXTRA HEAVY DUTY SEAT & COVER OR EQUIVALENT FOR PARAPLEGICS.

GYPSUM WALLBOARD

STRUCTURAL GLAZED FACING TILE

MET. TOILET DOORS & PILASTERS

GRAB BARS

18"x30"

TOWELS

TOP OF DIAL

54"

4" TO 6" WASHED GRAVEL FILL

POLYETHYLENE MOISTURE STOP

2" x 3'-0" RIGID POLYSTYRENE SLAB INSULATION

NOTE: ALL FIXTURE HEIGHTS SHOWN MUST BE MAINTAINED REGARDLESS OF MANUFACTURERS RECOMMENDATIONS

ALL VENTS TO BE FRAMED WITH 2 X 4 LUMBER

FOUNTAIN MOUNTINGS TO BE REINFORCED WITH 2 X 4 LUMBER

SECTION A-A

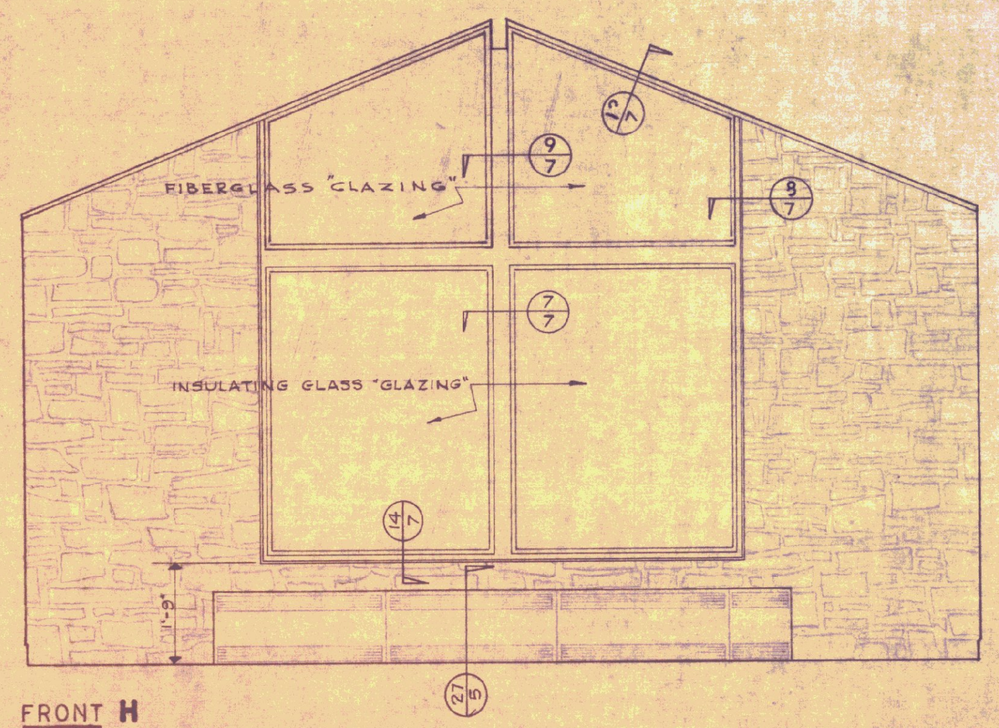

FRONT H

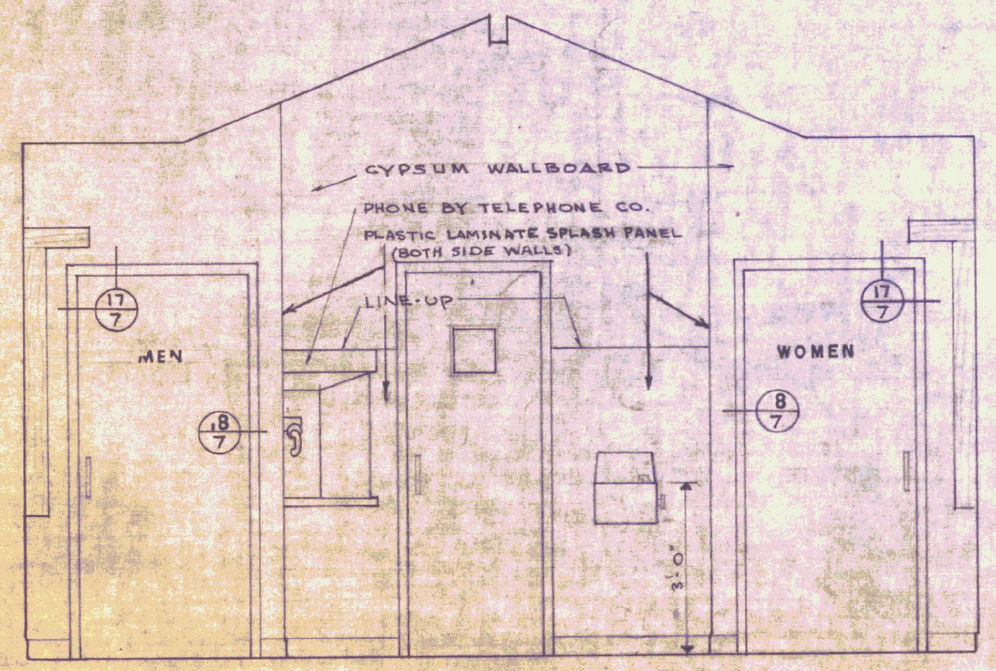

REAR J

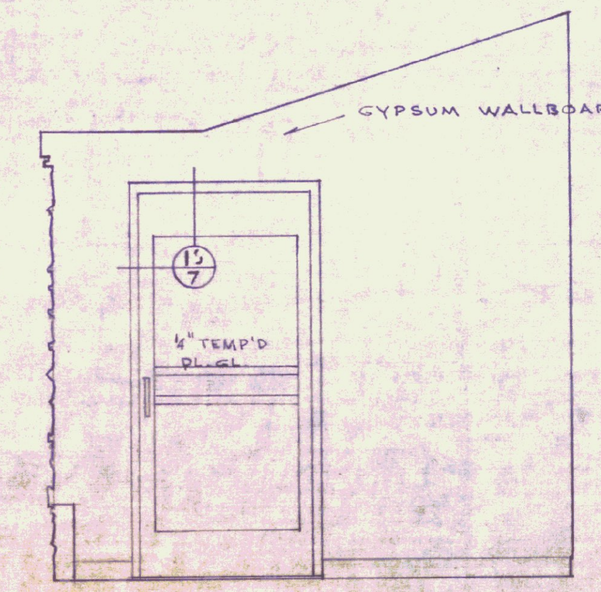

LEFT

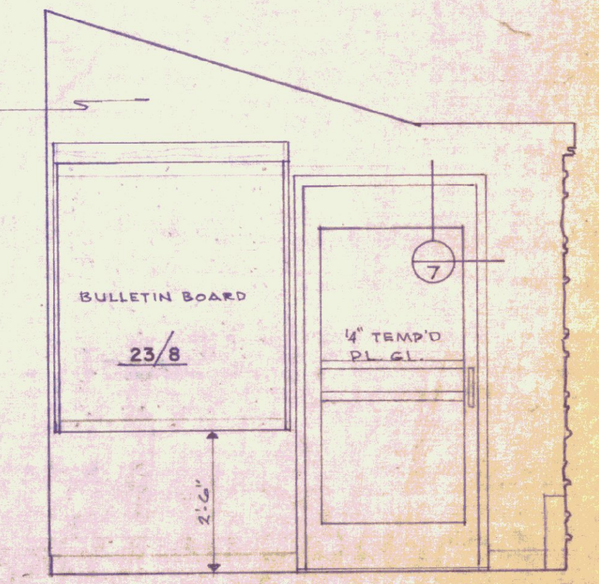

RIGHT L

NOTE:
#549 CLASSIC SOLID PLASTIC SEAT WITH COVER, #720 (CLOSED FRONT SEAT) OR #721 (OPEN FRONT SEAT) EXTRA HEAVY DUTY SEAT & COVER OR EQUIVALENT FOR PARAPLEGICS.

GRAB BARS

LOBBY ELEVATIONS

ROADSIDE REST FACILITIES

LONGITUDINAL SECTION & INTERIOR ELEV'S.

STATE OF VERMONT
DEPARTMENT OF HIGHWAYS

PROJECT No

SCALE: 1/2"=1'-0" SHEET OF 4

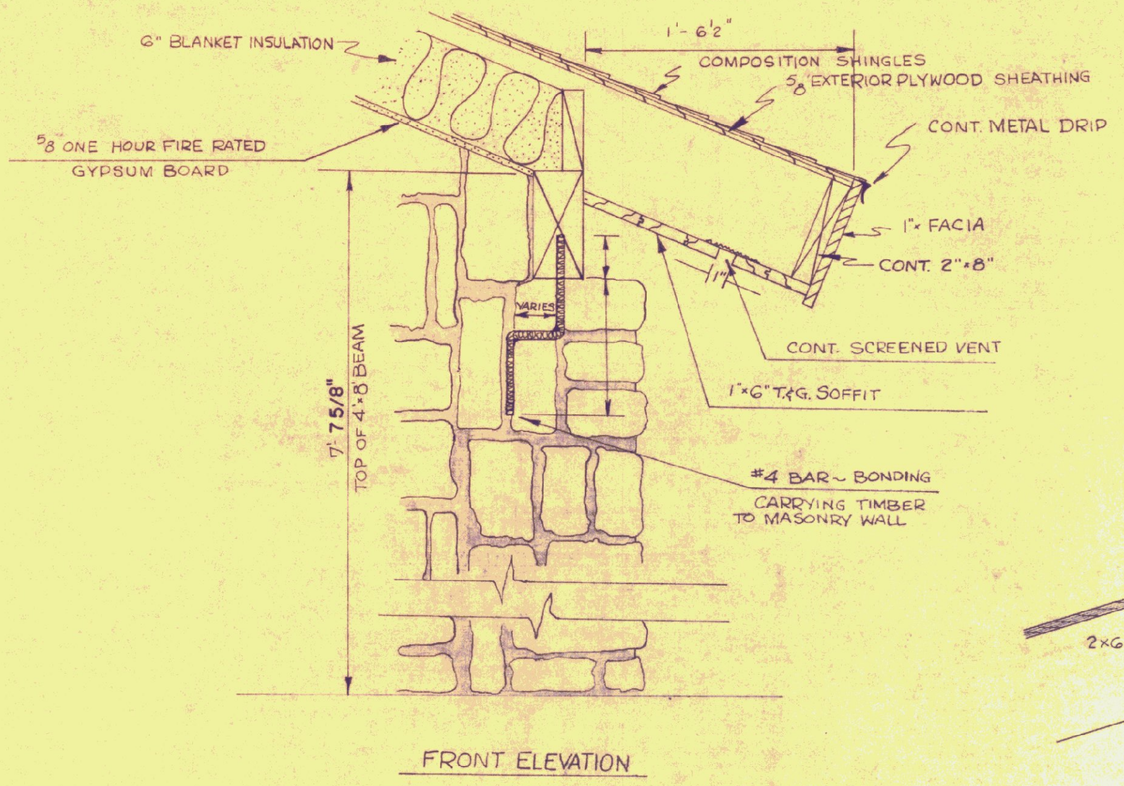

FRONT ELEVATION

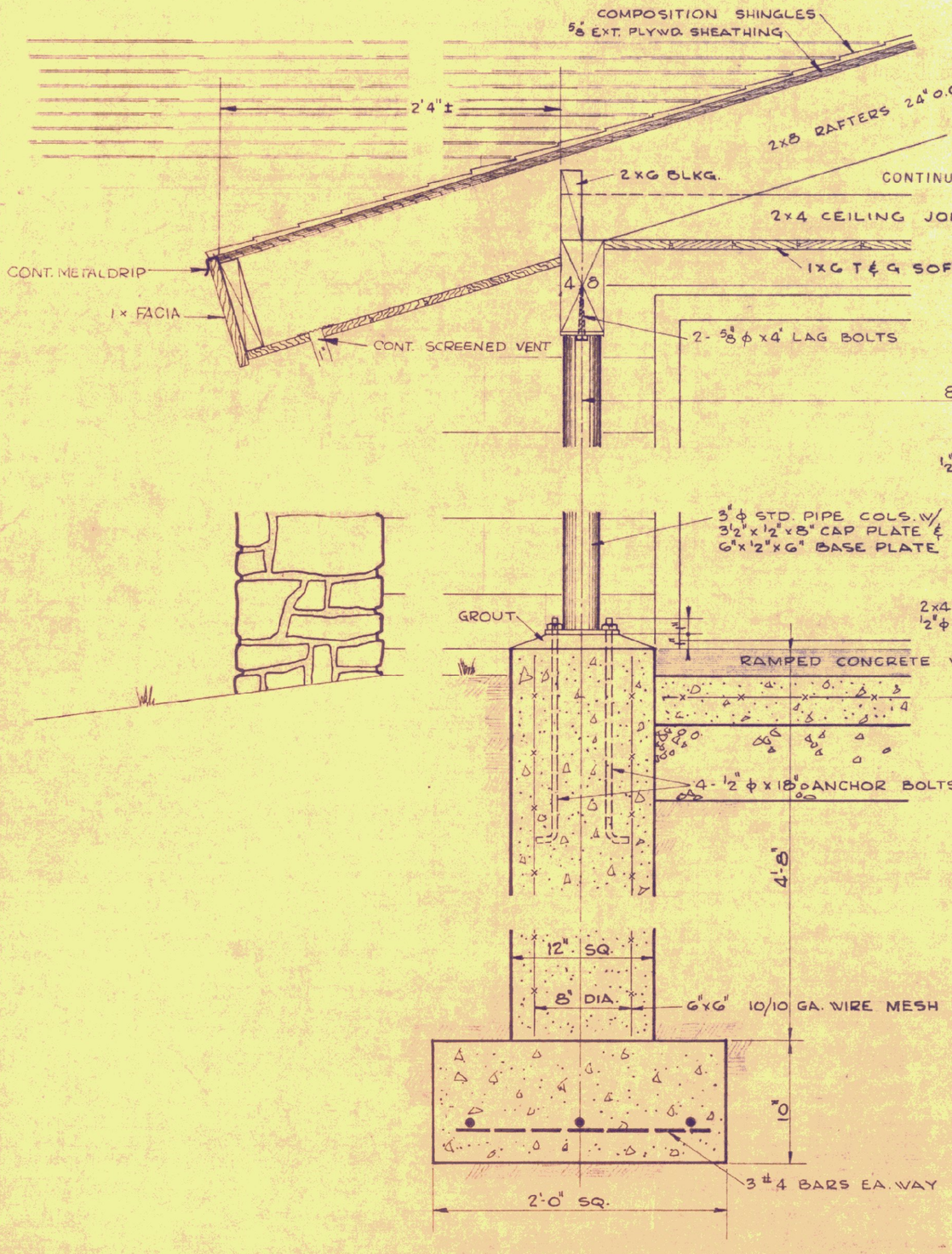

D-D

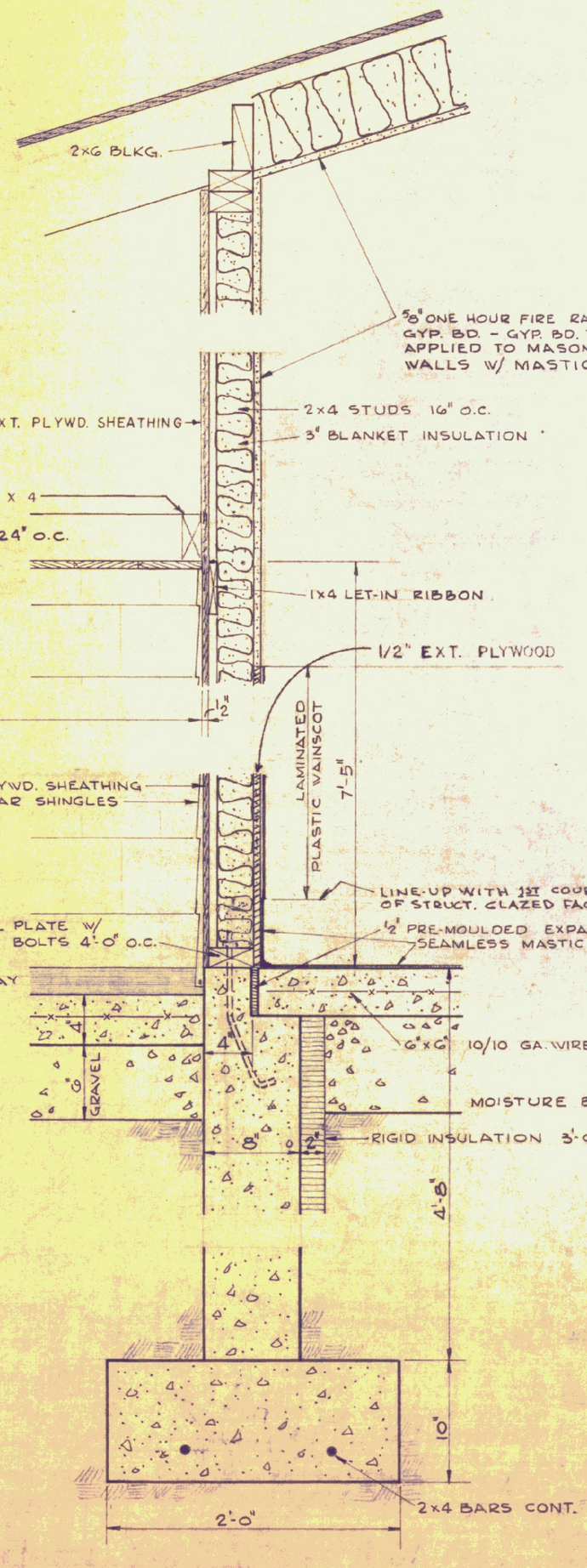

E-E

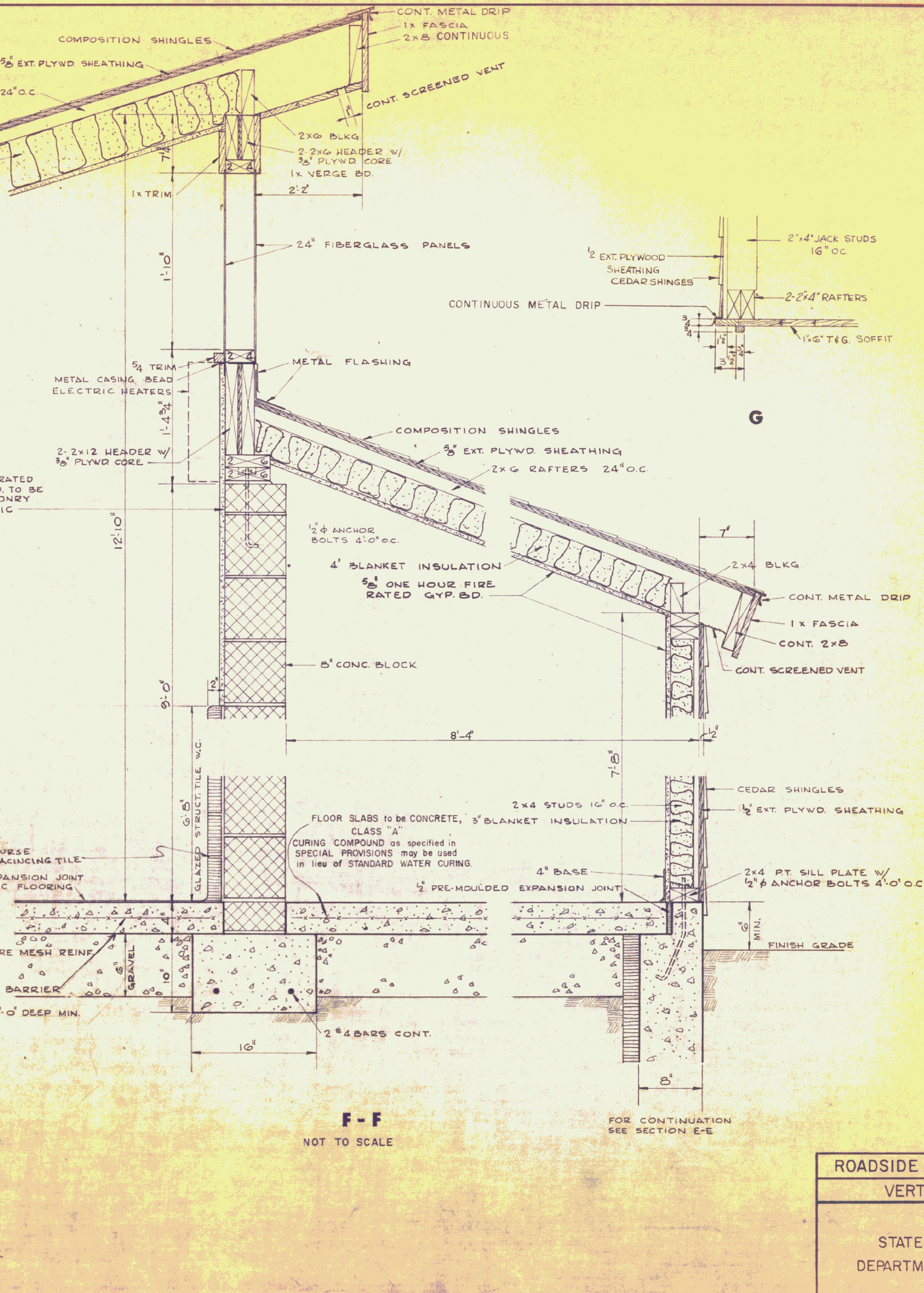

F-F

NOT TO SCALE

G

ROADSIDE REST FACILITIES

VERTICAL SECTIONS

STATE OF VERMONT
DEPARTMENT OF HIGHWAYS

PROJECT Nº

SCALE: 1 1/2"=1'-0 | SHEET OF | 6

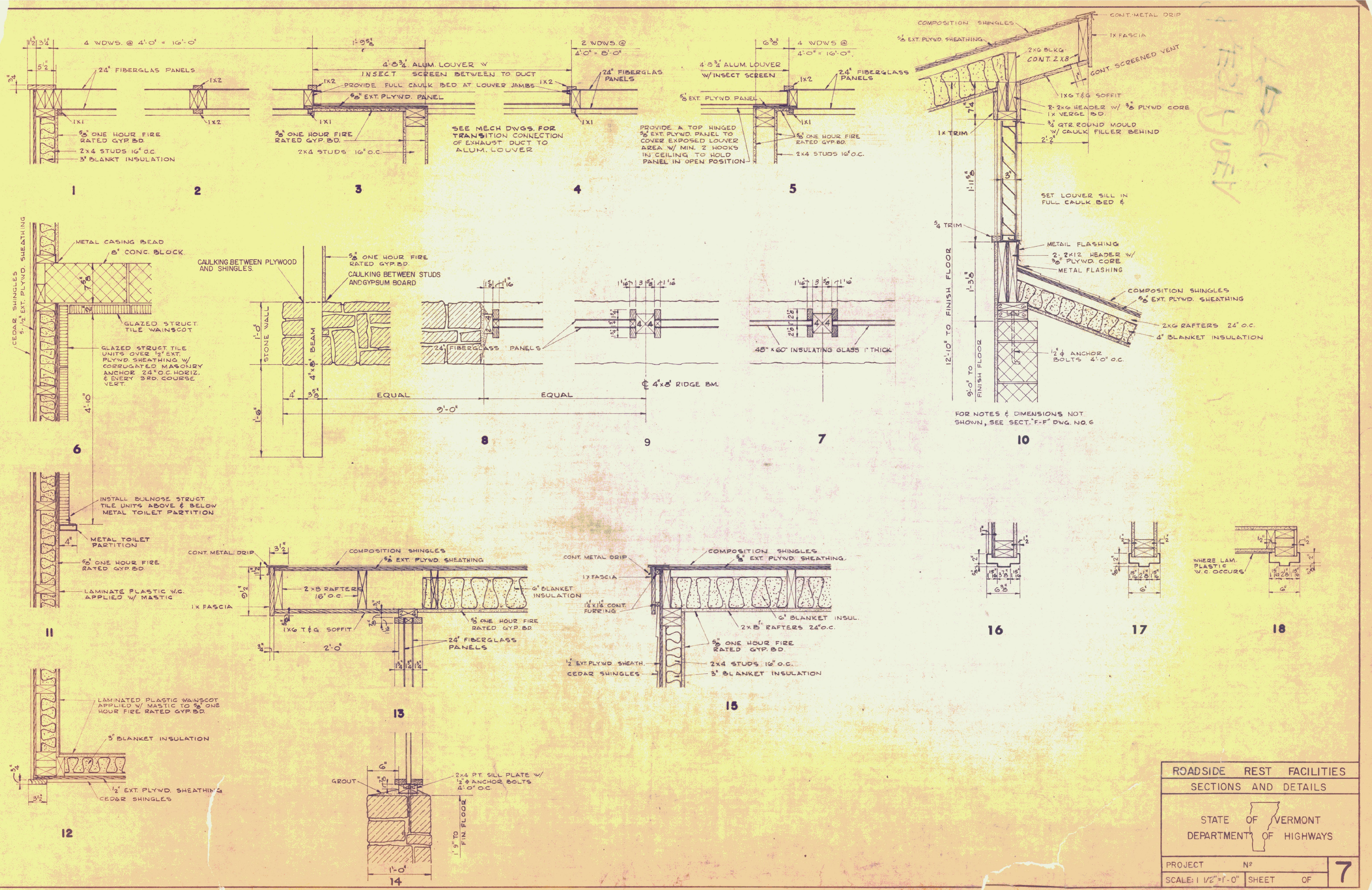

ROADSIDE REST FACILITIES

SECTIONS AND DETAILS

STATE OF VERMONT
DEPARTMENT OF HIGHWAYS

PROJECT	Nº	7
SCALE: 1 1/2" = 1'-0"	SHEET OF	