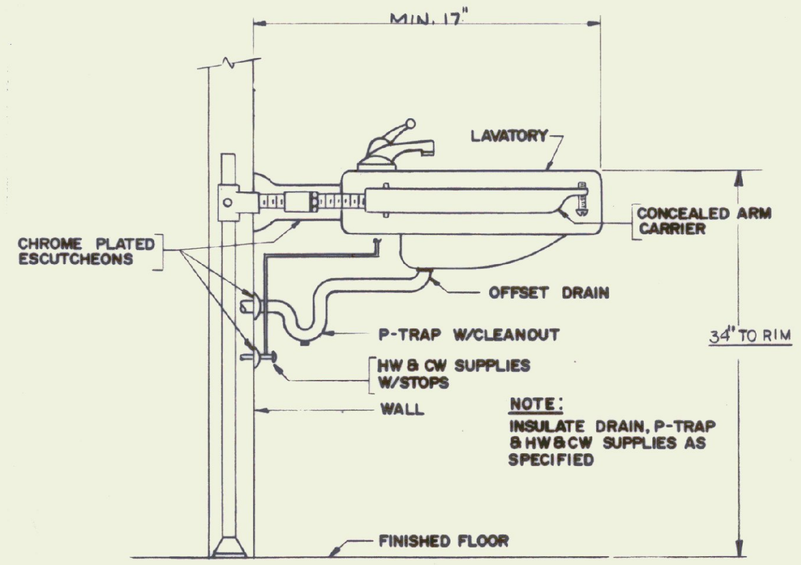

HANDICAPPED LAVATORY MOUNTING DETAIL
NOT TO SCALE

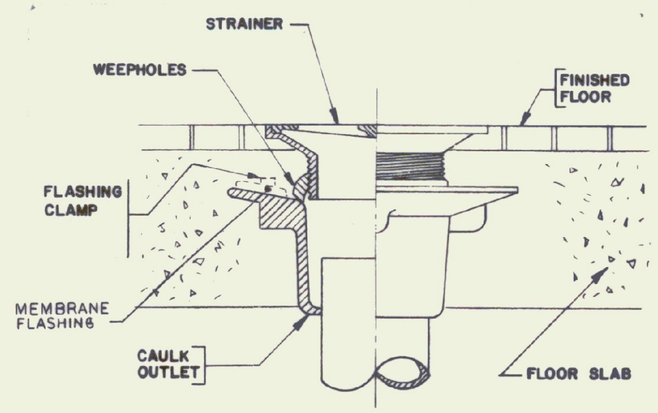

FLOOR DRAIN DETAIL
NOT TO SCALE

PLUMBING FIXTURE & RUNOUT SCHEDULE

MARK	FIXTURE	DESCRIPTION	COLD WATER	HOT WATER	WASTE	VENT
P-1A		WATER CLOSET (HANDICAP USE) (REG.USE)	1 1/4"		4"	2"
P-2A		LAVATORY-WALL HUNG (HANDICAP USE)	1/2"	1/2"	1 1/2"	1 1/2"
P-3A		DOUBLE WATER COOLER (REG & HANDI)	1/2"		(2) 1 1/2"	(2) 1 1/2"

PLUMBING LEGEND

SYMBOLS USED ARE INDICATED BY A CHECK (✓)

✓		SANITARY OR WASTE LINE (ABOVE GROUND)
✓		SANITARY OR WASTE LINE (BELOW GROUND)
	ST	STORM LINE (ABOVE GROUND)
	ST	STORM LINE (BELOW GROUND)
✓	G	GAS LINE (LPG)
	A	COMPRESSED AIR LINE
	F	FIRE LINE
✓		VENT LINE (ABOVE GROUND)
✓		VENT LINE (BELOW GROUND)
✓		COLD WATER LINE (ABOVE GROUND)
		COLD WATER LINE (BELOW GROUND)
✓		HOT WATER LINE
		HOT WATER RECIRCULATING LINE
✓	C.O.	CLEAN OUT
✓	F.C.O.	FLOOR CLEAN OUT
✓	WH (OR) HB	WALL HYDRANT OR HOSE BIBB
		GLOBE VALVE
✓		CHECK VALVE
✓		BALL VALVE
✓		FLOOR DRAIN WITH TRAP
✓	N	NEW
✓	E	EXISTING
✓	P	POINT OF [N] PLUMBING CONNECTION TO [E]
✓	SAN.	SANITARY LINE
	ST.	STORM LINE
✓	V.	VENT LINE
✓	W.	WASTE LINE
✓	T.	TRAP
	R.D.	ROOF DRAIN
	R.L.	ROOF LEADER
✓		[E] TO BE REMOVED

NOTES:
1.- REMOVE [E] SOAP DISPENSER SYSTEM COMPLETELY IN BOTH MEN'S AND WOMENS ROOM. SEE SPEC.
2.- FURNISH & INSTALL COCK-HOLE COVERS IN [E] LAVATORIES OPENINGS.

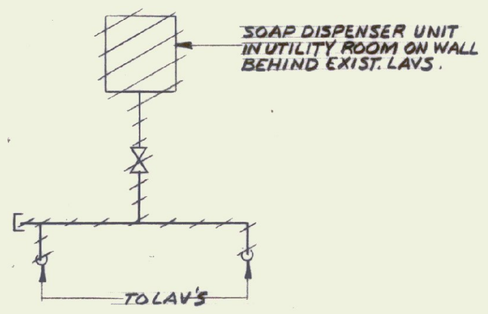

EXISTING SOAP DISPENSER-DEMOLITION
NTS
NORTHBOUND ONLY

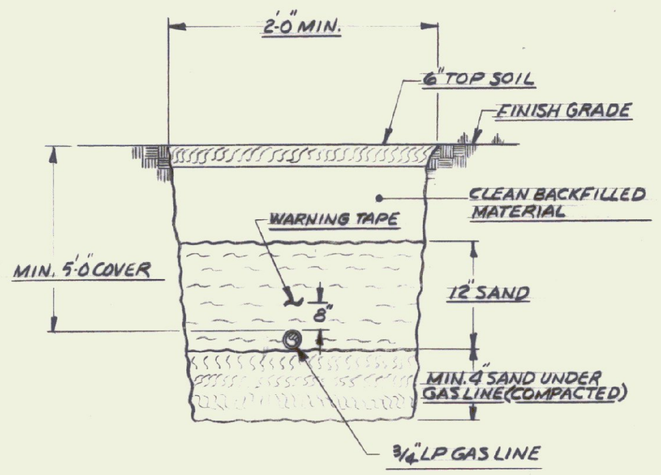

TRENCH DETAIL-GAS LINE
NTS

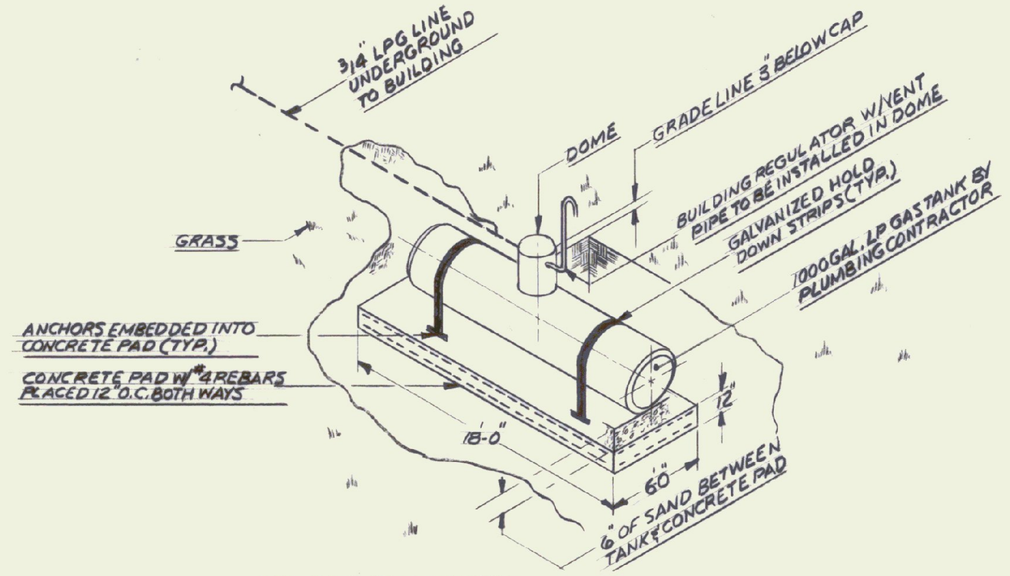

LP GAS TANK DETAIL
NTS

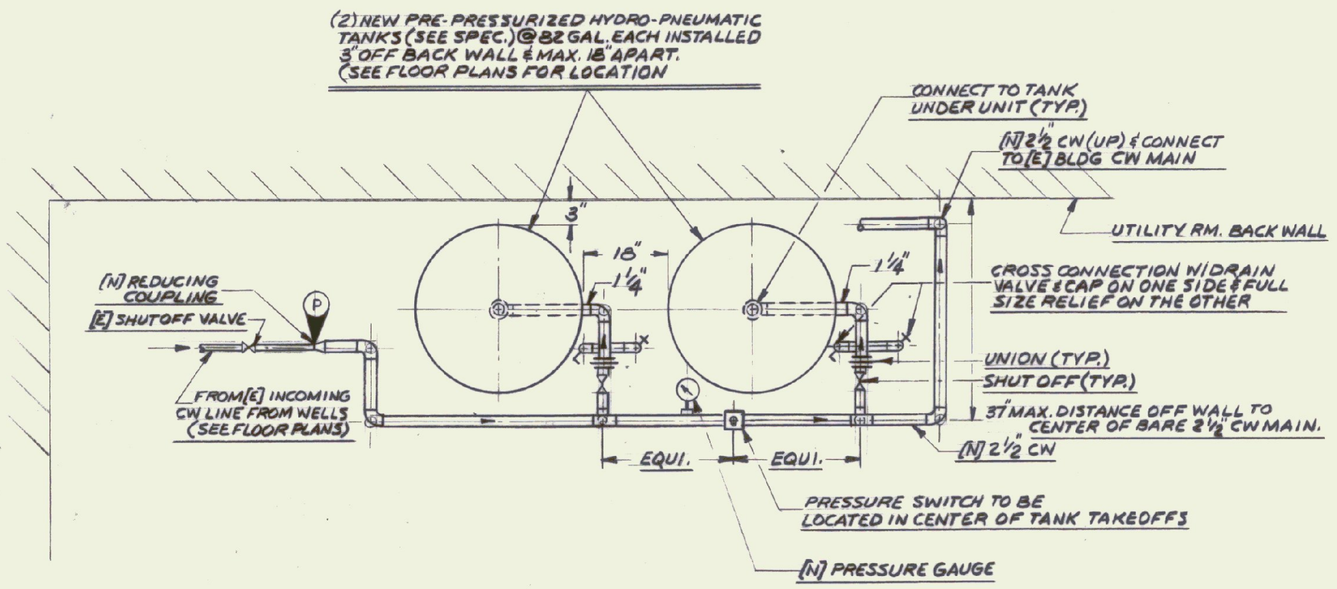

NEW INCOMING WELL WATER STORAGE CONTROL SYSTEM
NTS

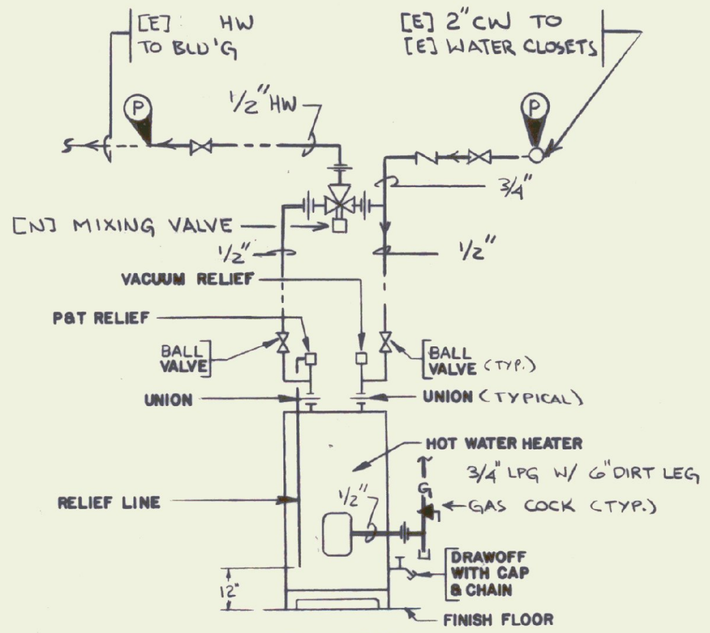

HOT WATER HEATER PIPING DETAIL
NOT TO SCALE

RECORD DRAWING

STATE OF VERMONT
DEPARTMENT OF STATE BUILDINGS
AGENCY OF ADMINISTRATION
MONTPELIER, VERMONT

REST AREA REHABILITATION
GEORGIA I-89
NORTH & SOUTHBOUND

DATE: 8-21-98	SCALE:	REVISIONS:	DRAWING NAME: PLUMBING LEGEND DETAILS
DRAWN BY: DG	PROJECT NO.		DRAWING NO: P-3.0
CHECKED BY: NFL 779A/C			

Neal F. Lauzenne
NEAL F. LAUZENNE No. 3448 REGISTERED PROFESSIONAL ENGINEER